© Siemens AG 2017

SIEMENS

Motion Control Drives

SINAMICS S120 and SIMOTICS

Catalog
D 21.4

Edition
2017

siemens.com/drives

Промэлектроника, sales@prom-elec.com

© Siemens AG 2017

Related catalogs

Motion Control System PM 21
SIMOTION
Equipment for Production Machines

E86060-K4921-A101-A4-7600

SINAMICS S120 D 21.3
Chassis Format Converter Units
and Cabinet Modules
SINAMICS S150
Converter Cabinet Units
PDF (E86060-K5521-A131-A5-7600)

Motion Control Drives D 31
SINAMICS Inverters for Single-Axis Drives
and SIMOTICS motors

E86060-K5531-A101-A2-7600

SIMOTICS S-1FG1 D 41
Servo geared motors
Helical, Parallel shaft, Bevel and
Helical worm geared motors

E86060-K5541-A101-A3-7600

SIMOTICS GP, SD, XP, DP D 81.1
Low Voltage Motors
Type series 1FP1, 1LE1, 1MB1 and 1PC1
Frame sizes 71 to 315
Power range 0.09 to 200 kW
E86060-K5581-A111-A9-7600

Motion Control NC 62
SINUMERIK 840
Equipment for Machine Tools

E86060-K4462-A101-A2-7600

Motion Control NC 82
SINUMERIK 828
Equipment for Machine Tools

E86060-K4482-A101-A5-7600

Industrial Controls IC 10
SIRIUS

PDF (E86060-K1010-A101-A7-7600)

Industrial Controls IC 10 AO
SIRIUS Classic

PDF (E86060-K1010-A191-A5-7600)

Industrial Communication IK PI
SIMATIC NET

E86060-K6710-A101-B8-7600

SITRAIN ITC
Training for Industry

Only available in German
E86060-K6850-A101-C5

SITOP KT 10.1
Power supply
SITOP

E86060-K2410-A111-B2-7600

Low-Voltage Power Distribution and LV 10
Electrical Installation Technology
SENTRON • SIVACON • ALPHA
Protection, Switching, Measuring and Monitoring
Devices, Switchboards and Distribution Systems

PDF (E86060-K8280-A101-A4-7600)
PDF/print (E86060-K8280-A101-A3-7600)

SIMATIC ST 70
Products for
Totally Integrated Automation

E86060-K4670-A101-B5-7600

SIMATIC HMI / ST 80/ST PC
PC-based Automation
Human Machine Interface Systems/
PC-based Automation

E86060-K4680-A101-C4-7600

Products for Automation and Drives CA 01
Interactive catalog
DVD

E86060-D4001-A510-D7-7600

Industry Mall
Information and Ordering Platform
on the Internet

www.siemens.com/industrymall

© Siemens AG 2017

SINAMICS S120 and SIMOTICS

Motion Control Drives

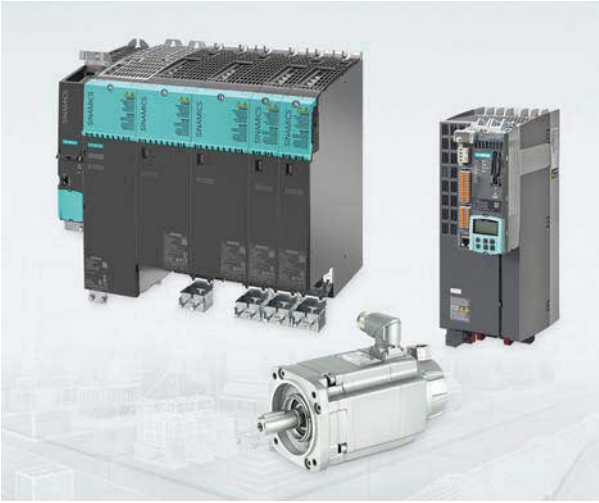

Catalog D 21.4 · 2017

Supersedes:
Catalog PM 21 · 2013

Refer to the Industry Mall for current updates of this catalog:
www.siemens.com/industrymall

The products contained in this catalog can also be found in the Interactive Catalog CA 01.
Article No.: E86060-D4001-A510-D7-7600

Please contact your local Siemens branch.

System overview 1
Firmware functionality 2
Safety Integrated 3
Energy efficiency 4
Communication 5
Technology functions 6
SINAMICS S120 drive system 7
SIMOTICS servomotors 8
SIMOTICS main motors 9
SIMOTICS linear and torque motors 10
Motion Control Encoder measuring systems 11
MOTION-CONNECT connection systems 12
Tools and configuration 13
Drive applications 14
Services and documentation 15
Appendix 16

PEFC
PEFC/04-31-1885

Printed on paper from sustainably managed forests and controlled sources.

www.pefc.org

IQNet
THE INTERNATIONAL CERTIFICATION NETWORK

The products and systems described in this catalog are distributed under application of a certified quality management system in accordance with DIN EN ISO 9001 (certificate registration No. 001258 QM) and DIN EN ISO 14001 (certificate registration No. 081342 UM).The certificate is recognized by all IQNet countries.

© Siemens AG 2017

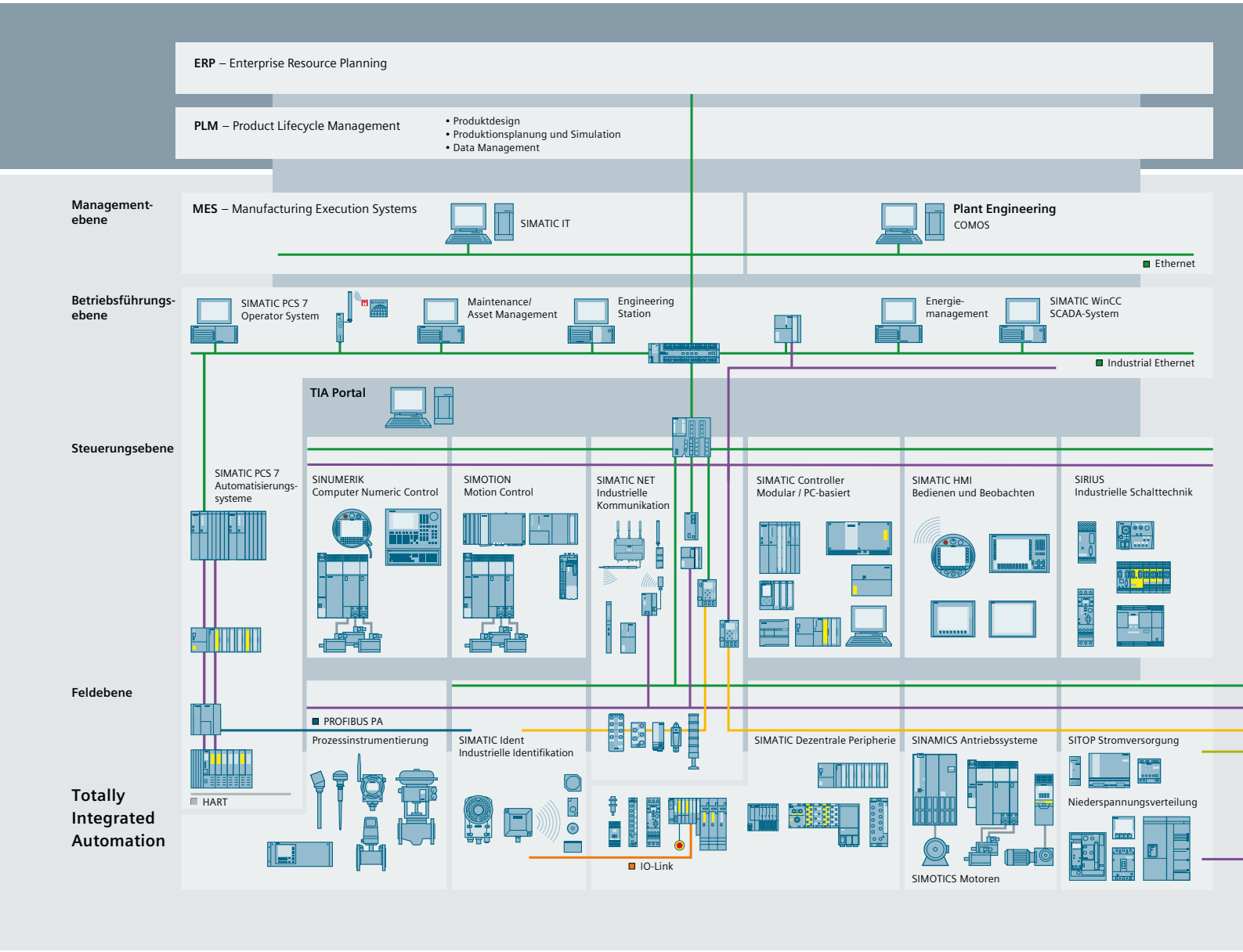

Efficient automation starts with efficient engineering.

Totally Integrated Automation: Efficiency driving productivity.

Efficient engineering is the first step toward better production that is faster, more flexible, and more intelligent. With all components interacting efficiently, Totally Integrated Automation (TIA) delivers enormous time savings right from the engineering phase. The result is lower costs, faster time-to-market, and greater flexibility.

© Siemens AG 2017

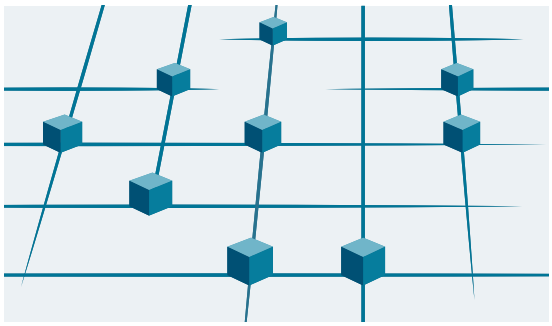

Totally Integrated Automation
Efficient interoperability of all automation components

- PROFINET
- Industrial Ethernet
- PROFIBUS
- AS-Interface
- KNX GAMMA instabus

Totally Integrated Power

A unique complete approach for all industries

As one of the world's leading automation suppliers, Siemens provides an integrated, comprehensive portfolio for all requirements in process and manufacturing industries. All components are mutually compatible and system-tested. This ensures that they reliably perform their tasks in industrial use and interact efficiently, and that each automation solution can be implemented with little time and effort based on standard products. The integration of many separate individual engineering tasks into a single engineering environment, for example, provides enormous time and cost savings.

With its comprehensive technology and industry-specific expertise, Siemens is continuously driving progress in manufacturing industries – and Totally Integrated Automation plays a key role.

Totally Integrated Automation creates real value added in all automation tasks, especially for:

- **Integrated engineering**
  Consistent, comprehensive engineering throughout the entire product development and production process
- **Industrial data management**
  Access to all important data occurring in productive operation – along the entire value chain and across all levels
- **Industrial communication**
  Integrated communication based on international cross-vendor standards that are mutually compatible
- **Industrial security**
  Systematic minimization of the risk of an internal or external attack on plants and networks
- **Safety Integrated**
  Reliable protection of personnel, machinery, and the environment thanks to seamless integration of safety technologies into the standard automation

Making things right with Totally Integrated Automation

Totally Integrated Automation, industrial automation from Siemens, stands for the efficient interoperability of all automation components. The open system architecture covers the entire production process and is based on end-to-end shared characteristics: consistent data management, global standards, and uniform hardware and software interfaces.

Totally Integrated Automation lays the foundation for comprehensive optimization of the production process:

- Time and cost savings due to efficient engineering
- Minimized downtime due to integrated diagnostic functions
- Simplified implementation of automation solutions due to global standards
- Better performance due to interoperability of system-tested components

© Siemens AG 2017

Integrated Drive Systems

Faster on the market and in the black with Integrated Drive Systems

SINAMICS is an important element of a Siemens Integrated Drive System, contributing significantly to increased efficiency, productivity, and availability in industrial production processes.

Integrated Drive Systems are Siemens' trendsetting answer to the high degree of complexity that characterizes drive and automation technology today. The world's only true one-stop solution for entire drive systems is characterized in particular by its threefold integration: Horizontal, vertical, and lifecycle integration ensure that every drive system component fits seamlessly into the whole system, into any automation environment, and even into the entire lifecycle of a plant.

The outcome is an optimal workflow – from engineering all the way to service that entails more productivity, increased efficiency, and better availability. That's how Integrated Drive Systems reduce time to market and time to profit.

Horizontal integration

Integrated drive portfolio: The core elements of a fully integrated drive portfolio are frequency converters, motors, couplings, and gear units. At Siemens, they're all available from a single source. Perfectly integrated, perfectly interacting. For all power and performance classes. As standard solutions or fully customized. No other player in the market can offer a comparable portfolio. Moreover, all Siemens drive components are perfectly matched, so they are optimally interacting.

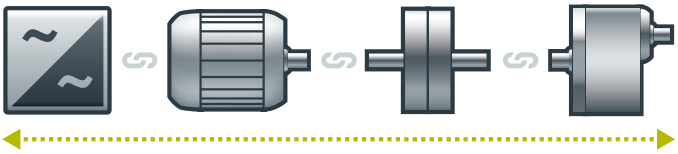

You can boost the availability of your application or plant to up to

*e.g., conveyor application

Vertical integration

Thanks to **vertical integration**, the complete drive train is seamlessly integrated in the entire automation environment – an important prerequisite for production with maximum value added. Integrated Drive Systems are part of Totally Integrated Automation (TIA), which means that they are perfectly embedded into the system architecture of the entire industrial production process. This enables optimal processes through maximum communication and control.

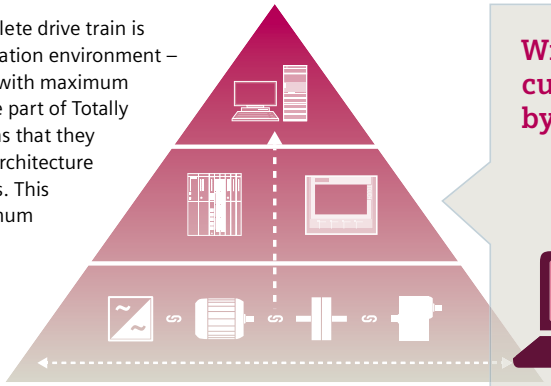

With TIA Portal you can cut your engineering time by up to

Lifecycle integration

Lifecycle integration adds the factor of time: Software and service are available for the entire lifecycle of an Integrated Drive System. That way, important optimization potential for maximum productivity, increased efficiency, and highest availability can be leveraged throughout the system's lifecycle – from planning, design, and engineering to operation, maintenance, and all the way even to modernization.

With Integrated Drive Systems, assets become important success factors. They ensure shorter time to market, maximum productivity and efficiency in operation, and shorter time to profit.

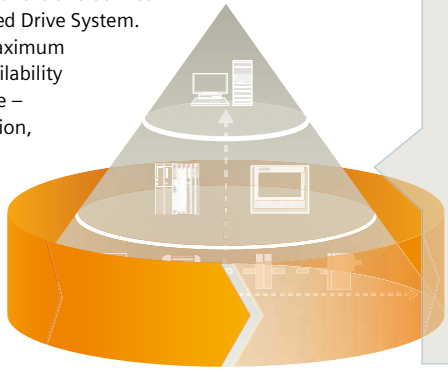

With Integrated Drive Systems you can reduce your maintenance costs by up to

www.siemens.com/ids

© Siemens AG 2017

System overview

1/2	Excellence in Motion Control
1/3	The SINAMICS drive family
1/7	Drive selection
1/8	SINAMICS S120 drive system
1/13	SIMOTICS motors
1/14	SIMOTICS motors for motion control applications
1/16	MOTION-CONNECT connection system

Further information about SINAMICS, SIMOTICS and MOTION-CONNECT can be found on the Internet at
www.siemens.com/sinamics
www.siemens.com/simotics
www.siemens.com/motion-connect

© Siemens AG 2017

Overview

Motion Control Solutions "Made by Siemens"

Thanks to our strong innovation capacity, sector know-how and outstanding customer benefits of our automation solutions for machine tools and production machines, Siemens is one of the leading suppliers of Motion Control Systems worldwide. For this reason, we can supply many references in different areas.

Innovative products, systems, solutions and services for each sector

Siemens Motion Control Systems satisfy very high requirements: All products stand out through the use of the latest technologies, high functionality and quality. In addition, the individual systems and products are optimally matched to one another so that they can be easily and consistently combined into an economic machine solution.

Examples of this are the SIMOTION Motion Control System, the SINAMICS drive system and the SIMOTICS motors. These products constitute an innovative system platform with which you can optimize the design of your machine to meet your own requirements. They provide you with optimized, economic and future-oriented motion control solutions for different sectors such as the packaging, plastics and glass, wood and metalworking, textile and printing industries, which can be easily expanded for increased requirements.

By offering you Mechatronic Support, Siemens is providing you with an intelligent alternative to developing expensive prototypes. Using virtual prototyping, it is possible to model and optimize all the mechanical, electronic and information technology systems for their functionality while they are still at the design stage. You don't then need to implement a prototype for real, but can immediately build the finished machine.

Application consulting: The safe path to top solutions

Our technical and application consultants accompany the projects on site from planning to commissioning, from the idea to the functioning machine. You will receive support from a number of different application centers, some of which are sited in Germany, Italy, the USA and China.

Application consulting includes:

- Planning and implementation of projects
- Technical verification with test configuration and simulation
- Development of requirements and functional specifications
- Application workshops and customer-specific training courses

Partnership for joint success

During this cooperation Siemens not only supports its customers, but also includes them as technology partners in the development process of systems and components which results in practical and future-oriented automation solutions.

In this way Siemens helps its customers increase their productivity, competitiveness and profitability over the long term.

© Siemens AG 2017

Overview

Integration in automation

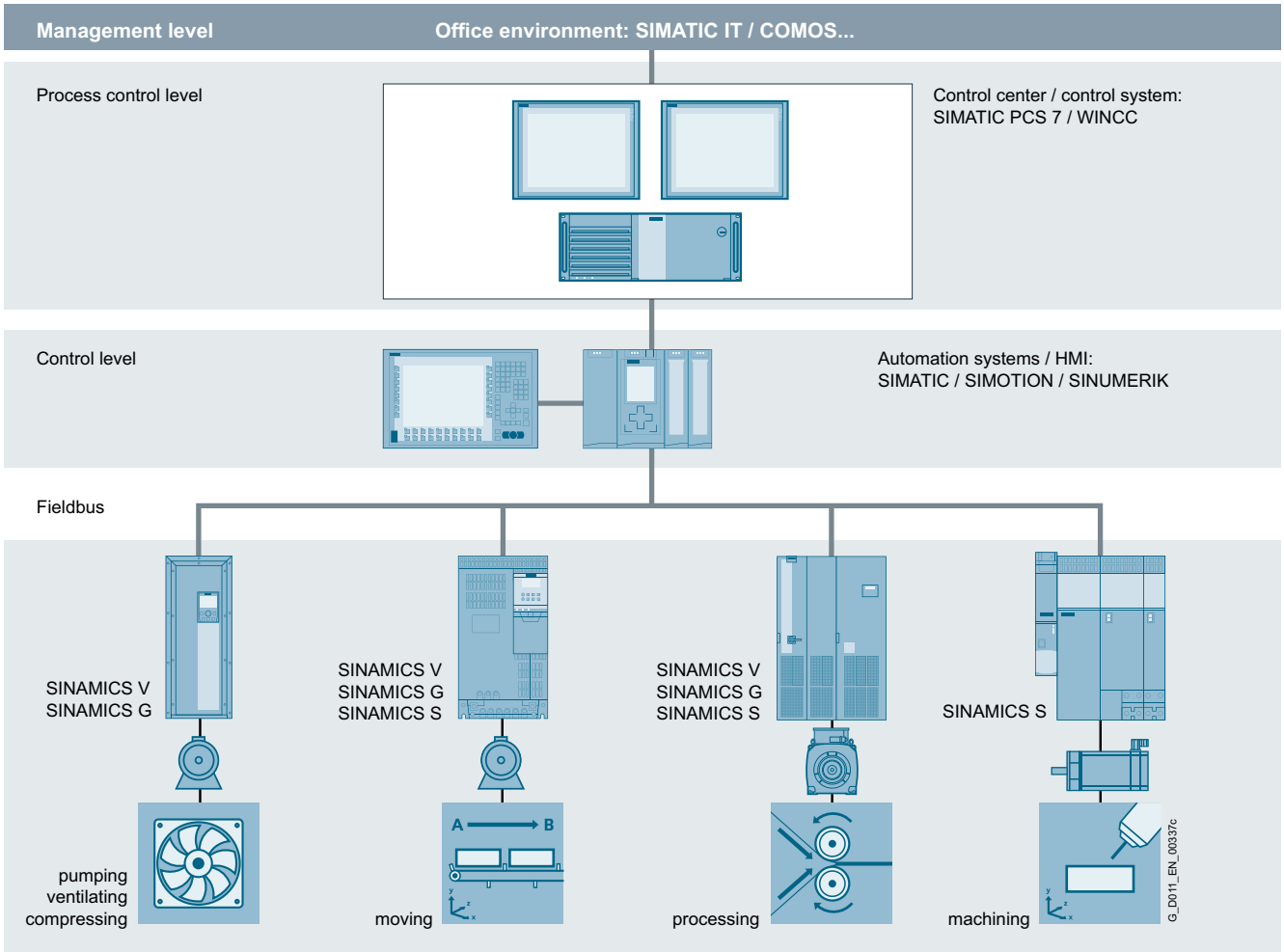

Totally Integrated Automation and communication

SINAMICS is an integral component of the Siemens "Totally Integrated Automation" concept. Integrated SINAMICS systems covering configuration, data storage, and communication at automation level ensure low-maintenance solutions with the SIMATIC, SIMOTION and SINUMERIK control systems.

Depending on the application, the appropriate variable frequency drives can be selected and incorporated in the automation concept. With this in mind, the drives are clearly subdivided into their different applications. A wide range of communication options (depending on the drive type) are available for establishing a communication link to the automation system:

- PROFINET
- PROFIBUS
- EtherNet/IP
- Modbus TCP
- Modbus RTU
- AS-Interface
- BACnet MS/TP

Applications

SINAMICS is the comprehensive family of drives from Siemens designed for machine and plant engineering applications. SINAMICS offers solutions for all drive tasks:

- Simple pump and fan applications in the process industry
- Demanding single drives in centrifuges, presses, extruders, elevators, as well as conveyor and transport systems
- Drive line-ups in textile, plastic film, and paper machines as well as in rolling mill plants
- Highly dynamic servo drives for machine tools, as well as packaging and printing machines

© Siemens AG 2017

Overview (continued)

SINAMICS as part of the Siemens modular automation system

Innovative, energy-efficient and reliable drive systems and applications as well as services for the entire drive train

The solutions for drive technology place great emphasis on the highest productivity, energy efficiency and reliability for all torque ranges, performance and voltage classes.

Siemens offers not only the right innovative variable frequency drive for every drive application, but also a wide range of energy-efficient low voltage motors, geared motors, explosion-protected motors and high-voltage motors for combination with SINAMICS.

Furthermore, Siemens supports its customers with global pre-sales and after-sales services, with over 295 service points in 130 countries – and with special services e.g. application consulting or motion control solutions.

Energy efficiency

Energy management process

Efficient energy management consultancy identifies the energy flows, determines the potential for making savings and implements them with focused activities.

Almost two thirds of the industrial power requirement is from electric motors. This makes it all the more important to use drive technology permitting energy consumption to be reduced effectively even in the configuration phase, and consequently to optimize plant availability and process stability. With SINAMICS, Siemens offers powerful energy efficient solutions which, depending on the application, enable a significant reduction in electricity costs.

© Siemens AG 2017

Overview (continued)

Energy efficiency (continued)

Up to 70 % potential for savings using variable speed operation

SINAMICS enables great potential for savings to be realized by controlling the motor speed. In particular, huge potential savings can be recovered from pumps, fans and compressors which are operated with mechanical throttle and valves. Here, changing to variable-speed drives brings enormous economic advantages. In contrast to mechanical control systems, the power consumption at partial load operation is always immediately adjusted to the demand at that time. So energy is no longer wasted, permitting savings of up to 60 % – in exceptional cases even up to 70 %. Variable-speed drives also offer clear advantages over mechanical control systems when it comes to maintenance and repair. Current spikes when powering up the motor and strong torque surges become things of the past – and the same goes for pressure waves in pipelines, cavitation or vibrations which cause sustainable damage to the plant. Smooth starting and ramp-down relieve the load on the mechanical system, ensuring a significantly longer service life of the entire drive train.

Regenerative feedback of braking energy

In conventional drive systems, the energy produced during braking is converted to heat using braking resistors. Energy produced during braking is efficiently recovered to the supply system by versions of SINAMICS G and SINAMICS S inverters with regenerative feedback capability and these devices do not therefore need a braking resistor. This permits up to 60 % of the energy requirement to be saved, e.g. in lifting applications. Energy which can be reused at other locations on a machine. Furthermore, this reduced power loss simplifies the cooling of the system, enabling a more compact design.

Energy transparency in all configuration phases

Early on, in the configuration phase, the SIZER for Siemens Drives engineering tool provides information on the specific energy requirement. The energy consumption across the entire drive train is visualized and compared with different plant concepts.

SINAMICS in combination with energy-saving motors

Engineering integration stretches beyond the SINAMICS drive family to higher-level automation systems, and to a broad spectrum of energy-efficient motors with a wide range of performance classes, which, compared to previous motors, are able to demonstrate up to 10 % greater efficiency.

Variants

Depending on the application, the SINAMICS range offers the ideal variant for any drive task.

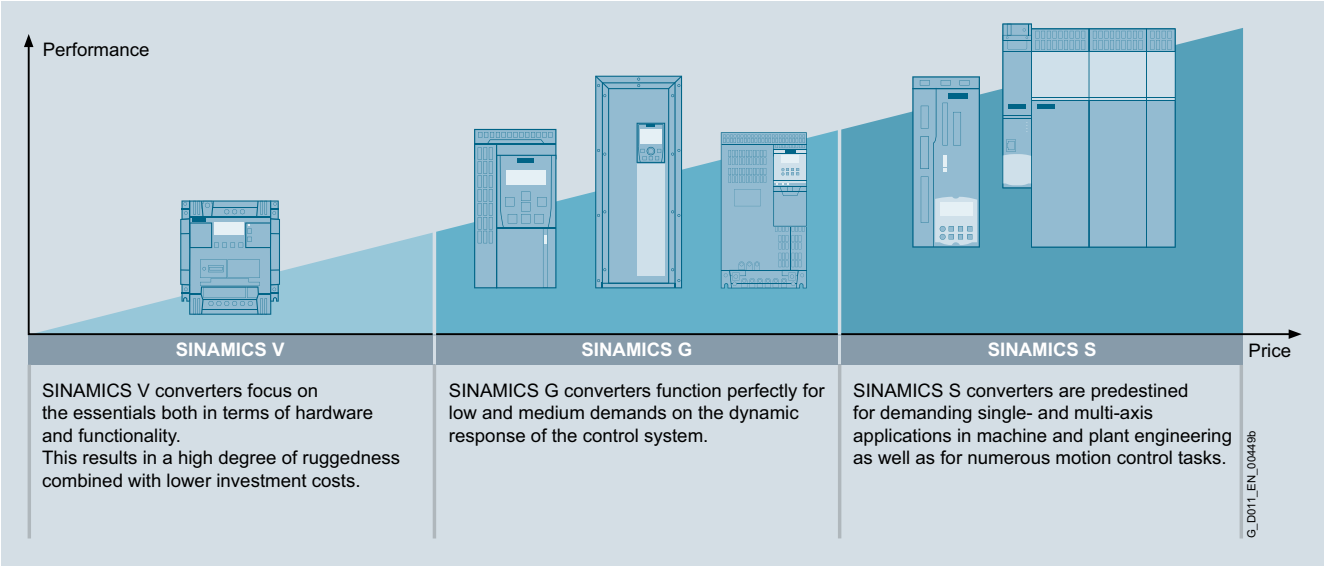

Platform concept

All SINAMICS variants are based on a platform concept. Joint hardware and software components, as well as standardized tools for dimensioning, configuration, and commissioning tasks ensure high-level integration across all components. SINAMICS handles a wide variety of drive tasks with no system gaps. The different SINAMICS variants can be easily combined with each other.

Quality management according to EN ISO 9001

SINAMICS conforms to the most exacting quality requirements. Comprehensive quality assurance measures in all development and production processes ensure a consistently high level of quality.

Of course, our quality management system is certified by an independent authority in accordance with EN ISO 9001.

IDS – Integration at its very best

The Siemens Integrated Drive Systems (IDS) solution offers perfectly matched drive components with which you can meet your requirements. The drive components reveal their true strengths as an Integrated Drive System over the full range from engineering and commissioning through to operation: Integrated system configuration is performed using the Drive Technology Configurator: Just select a motor and a converter and design them with the SIZER for Siemens Drives engineering tool. The STARTER commissioning tool integrates the motor data at the same time and simplifies efficient commissioning. Integrated Drive Systems are incorporated in the TIA Portal – this simplifies engineering, commissioning and diagnostics.

© Siemens AG 2017

Overview (continued)

Low voltage									DC voltage	Medium voltage
Basic performance		General performance					High performance		DC applications	Applications with high outputs
			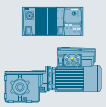				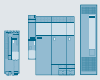			
V20	V90	G120C/G120/ G120P/ G120P Cabinet	G110D/ G120D/ G110M	G130/G150	G180	S110	S120/ S120M	S150	DCM	GH150/GH180/ GM150/SM150/ GL150/SL150/ SM120CM
0.12 ... 30 kW	0.05 ... 7 kW	0.37 ... 630 kW	0.37 ... 7.5 kW	75 ... 2700 kW	2.2 … 6600 kW	0.12 ... 90 kW	0.12 … 5700 kW	75 ... 1200 kW	6 kW … 30 MW	0.15 ... 85 MW
Pumps, fans, compressors, conveyor belts, mixers, mills, spinning machines and textile machines	Handling machines, packaging machines, automatic assembly machines, metal forming machines, printing machines, winding and unwinding units	Pumps, fans, compressors, conveyor belts, mixers, mills, extruders, building management systems, process industry, HVAC, single-axis positioning applications in machine and plant engineering	Conveyor technology, single-axis positioning applications (G120D)	Pumps, fans, compressors, conveyor belts, mixers, mills, extruders	Sector-specific for pumps, fans, compressors, conveyor belts, extruders, mixers, mills, kneaders, centrifuges, separators	Single-axis positioning applications in machine and plant engineering	Production machines (packaging, textiles and printing machines, paper machines, plastic processing machines), machine tools, plants, process lines and rolling mills, ships and test bays	Test bays, cross cutters, centrifuges	Rolling mill drives, wire-drawing machines, extruders and kneaders, cableways and lifts, test bay drives	Pumps, fans, compressors, mixers, extruders, mills, crushers, rolling mills, conveying technology, excavators, test bays, marine drives, blast furnace fans, retrofit
V20 Brochure	V90 Brochure	Catalogs D 31, D 35	Catalog D 31	Catalog D 11	Catalog D 18.1	Catalog D 31	Catalogs D 21.3 D 21.4, NC 62	Catalog D 21.3	Catalogs D 23.1, D 23.2	Catalogs D 15.1, D 12
Engineering tools (e.g. Drive Technology Configurator, SIZER for Siemens Drives, STARTER and SINAMICS Startdrive)										

G_D011_EN_00450f

© Siemens AG 2017

Overview

SINAMICS selection guide – typical applications

Use	Requirements for torque accuracy/speed accuracy/position accuracy/coordination of axes/functionality					
	Continuous motion			Non-continuous motion		
	Basic	Medium	High	Basic	Medium	High
	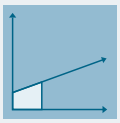	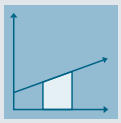	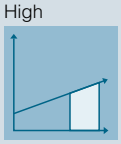	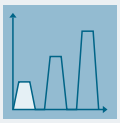		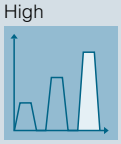
Pumping, ventilating, compressing	Centrifugal pumps Radial / axial fans Compressors	Centrifugal pumps Radial / axial fans Compressors	Eccentric screw pumps	Hydraulic pumps Metering pumps	Hydraulic pumps Metering pumps	Descaling pumps Hydraulic pumps
	V20 G110 G120C G120P	G120P G130/G150 G180 [1]	**S120**	G120	S110	**S120**
Moving 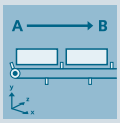	Conveyor belts Roller conveyors Chain conveyors	Conveyor belts Roller conveyors Chain conveyors Lifting/lowering devices Elevators Escalators/moving walkways Indoor cranes Marine drives Cable railways	Elevators Container cranes Mining hoists Excavators for open-cast mining Test bays	Acceleration conveyors Storage and retrieval machines	Acceleration conveyors Storage and retrieval machines Cross cutters Reel changers	Storage and retrieval machines Robotics Pick & place Rotary indexing tables Cross cutters Roll feeds Engagers/ disengagers
	V20 G110 G110D G110M G120C	G120 G120D G130/G150 G180 [1]	**S120** S150 DCM	V90 G120 G120D	S110 DCM	**S120** DCM
Processing 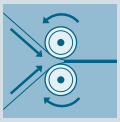	Mills Mixers Kneaders Crushers Agitators Centrifuges	Mills Mixers Kneaders Crushers Agitators Centrifuges Extruders Rotary furnaces	Extruders Winders/unwinders Lead/follower drives Calenders Main press drives Printing machines	Tubular bagging machines Single-axis motion control such as • Position profiles • Path profiles	Tubular bagging machines Single-axis motion control such as • Position profiles • Path profiles	Servo presses Rolling mill drives Multi-axis motion control such as • Multi-axis positioning • Cams • Interpolations
	V20 G120C	G120 G130/G150 G180 [1]	**S120** S150 DCM	V90 G120	S110	**S120** DCM
Machining	Main drives for • Turning • Milling • Drilling	Main drives for • Drilling • Sawing	Main drives for • Turning • Milling • Drilling • Gear cutting • Grinding	Axis drives for • Turning • Milling • Drilling	Axis drives for • Drilling • Sawing	Axis drives for • Turning • Milling • Drilling • Lasering • Gear cutting • Grinding • Nibbling and punching
	S110	S110 **S120**	**S120**	S110	S110 **S120**	**S120**

Using the SINAMICS selection guide

The varying range of demands on modern variable frequency drives requires a large number of different types. Selecting the optimum drive has become a significantly more complex process. The application matrix shown simplifies this selection process considerably, by suggesting the ideal SINAMICS drive for examples of typical applications and requirements.

- The application type is selected from the vertical column
  - Pumping, ventilating, compressing
  - Moving
  - Processing
  - Machining
- The quality of the motion type is selected from the horizontal row
  - Basic
  - Medium
  - High

More information

Further information about SINAMICS is available on the Internet at www.siemens.com/sinamics

Practical application examples and descriptions are available on the Internet at www.siemens.com/sinamics-applications

[1] Industry-specific inverters.

© Siemens AG 2017

Overview

Flexibility for successful machine concepts

As part of the SINAMICS drive family, the SINAMICS S120 drive is a modular system for high-performance applications in machine and plant engineering. SINAMICS S120 offers high-performance single-axis and multi-axis drives for a very broad range of industrial applications. By virtue of its scalability and flexibility, SINAMICS S120 is the ideal system for satisfying the ever increasing demand for more axes and better performance. SINAMICS S120 supports flexible machine designs and speedy implementation of customized drive solutions.

The response to ever increasing demands

Modern machines must be built at ever lower cost, but deliver ever greater productivity. The SINAMICS S120 drive concept meets both these challenges! It is easy to configure and thus helps to reduce project completion times. Its excellent dynamic response and accuracy permit higher cycle rates for maximum productivity.

Applications in machine and plant engineering

Regardless of whether the application involves continuous material webs or cyclic, highly dynamic processes – SINAMICS S120 means increased machine performance in many industries:

- Packaging machines
- Plastics processing machines
- Textile machines
- Printing machines
- Paper machines
- Woodworking machines
- Hoists and cranes
- Handling and assembly systems
- Machine tools
- Rolling mills
- Test stands
- Machinery associated with renewable energy applications

Modularity for mechanical engineering

SINAMICS S120 is designed to allow free combination of power and control performance. Multi-axis drives with higher-level motion control can be implemented with the SINAMICS S120 modular system as easily as single-drive solutions.

Greater flexibility with central control intelligence

On the SINAMICS S120, the drive intelligence is combined with closed-loop control functions into Control Units.

These units are capable of controlling drives in Vector, Servo and *V/f* modes. They also perform the speed and torque control functions plus other intelligent drive functions for all axes on the drive.

Free performance selection for Vector and Servo control modes

The use of a SINAMICS S120 Vector control is recommended for drive solutions with continuous material webs, for example, wire-drawing machines, film and paper machines, as well as for hoisting gear, centrifuges and marine drives with harmonic, circular motion.

Servo control with SINAMICS S120 is employed for cyclic processes with precise, highly dynamic position control and servo motors, e.g. in textile, packaging, printing machines and machine tools.

SINAMICS S120 – functions for better efficiency

- Basic functions: Speed control, torque control, positioning functions
- Intelligent starting functions for independent restart after power supply interruption
- BICO technology with interconnection of drive-related I/Os for easy adaptation of the drive system to its operating environment
- Integrated safety functions for rational implementation of safety concepts
- Regulated infeed/regenerative feedback functions for preventing undesirable reactions on the supply, allowing recovery of braking energy and ensuring greater stability against line fluctuations.

© Siemens AG 2017

Overview (continued)

DRIVE-CLiQ – the digital interface between all components

All SINAMICS S120 components, including the motors and encoders, are interconnected by a shared serial interface called DRIVE-CLiQ. The standardized cables and connectors reduce the variety of different parts and cut storage costs. Converter boards (Sensor Modules) for converting standard encoder signals to DRIVE-CLiQ are available for third-party motors or retrofit applications.

Swift and automatic: The electronic rating plate

An important digital linkage element of the SINAMICS S120 drive system are the electronic type plates integrated in every component. They allow all drive components to be detected automatically via a DRIVE-CLiQ link. As a result, data do not need to be entered manually during commissioning or component replacement – helping to ensure that drives are commissioned successfully! The electronic rating plates of the motors contain, for example, the parameters of the electrical equivalent circuit diagram and the characteristic data of the built-in motor encoder in addition to information such as order and identification numbers.

Modular design ensures flexibility and scalability

DC/AC units (Motor Modules) – available in compact booksize, booksize and chassis formats – are characterized by their modular design. All the drive intelligence is organized into Control Units. The Control Units perform all the closed-loop control functions for the drive line-up. They also handle all other drive functions such as the interconnection of drive-related I/Os, positioning functions, and feature PROFIBUS DP or PROFINET as the central interface for linking to higher-level automation systems.

Line Modules function as the central energy supply to the voltage-source DC link. Line Modules are optionally available with regulated infeed/regenerative feedback to provide a constant DC link voltage and high level of supply compatibility. Motor Modules supply the motors with energy from the DC link.

On AC/AC units, the infeed and motor power supply functions are combined in one device, the Power Module – available in blocksize and chassis formats. For single-axis applications, drive control functions are performed by a special Control Unit (CU310-2) mounted on the Power Module and for multi-axis applications, by a Control Unit (e.g. CU320-2) connected by a DRIVE-CLiQ link. In this case, a Control Unit Adapter is mounted on the Power Module in place of the Control Unit.

SINAMICS S120 blocksize, booksize compact, booksize and chassis formats

© Siemens AG 2017

Overview (continued)

All formats can be combined as required

The different SINAMICS S120 formats can be combined freely thanks to their DRIVE-CLiQ interfaces, e.g. Line Modules in chassis format can be freely combined with Motor Modules in booksize format for multi-axis applications with high total output.

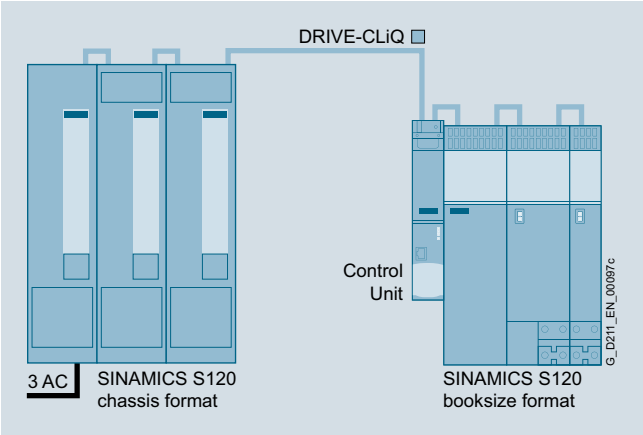

SINAMICS S120 Control Units in booksize and chassis formats

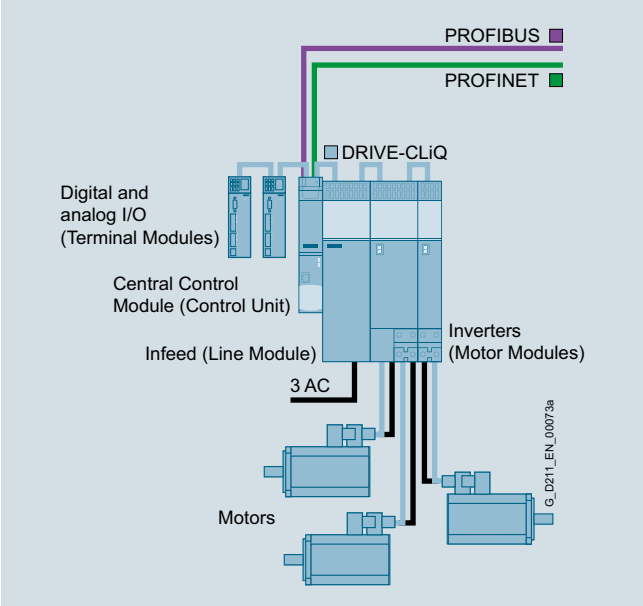

Example configuration of SINAMICS S120 booksize format

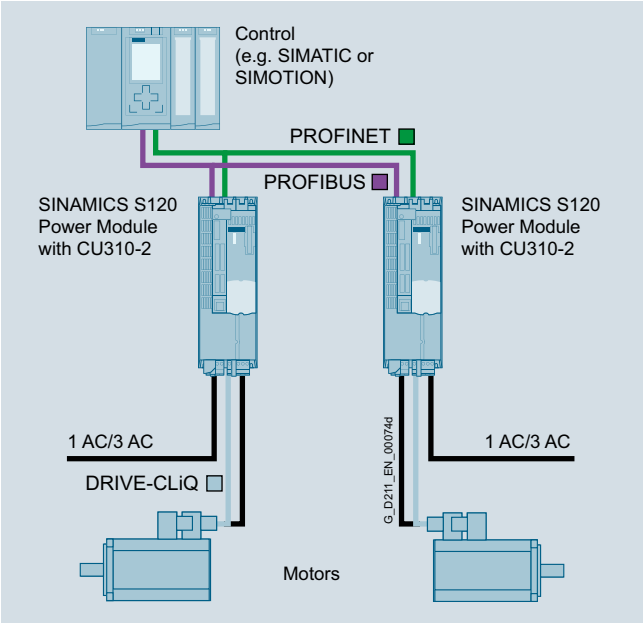

Example configuration of SINAMICS S120 blocksize format

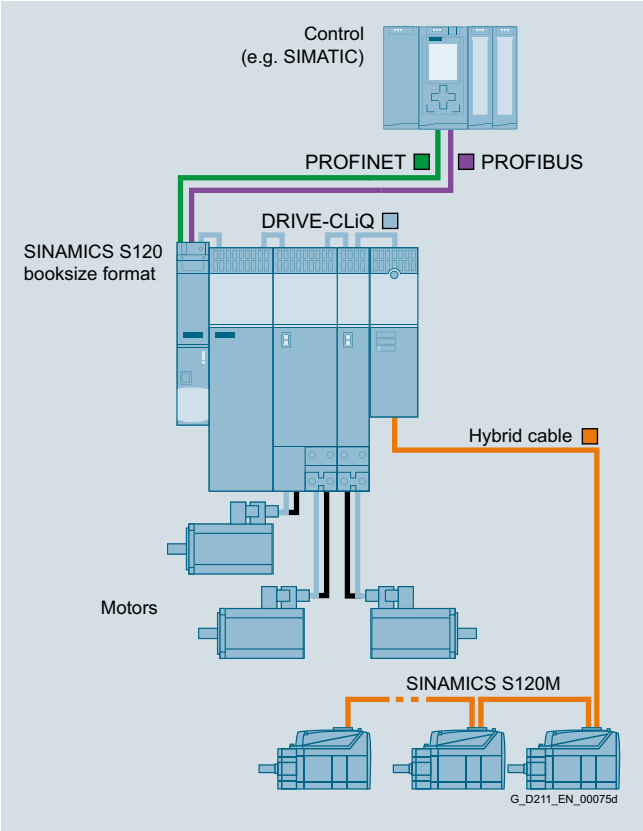

Example configuration of SINAMICS S120, integrated in control cabinet and distributed

© Siemens AG 2017

Overview (continued)

SINAMICS S120 can be scaled with respect to performance and technology. In the case of more exacting technological requirements, for example, the SINAMICS S120 Control Unit can be replaced by a drive-based controller for motion control. This is the SINUMERIK 840D sl for machine tools, or the SIMOTION D for production machinery and plant engineering. It is also easy to couple the SINAMICS S120 to a higher-level SIMATIC S7 with integral technology functions.

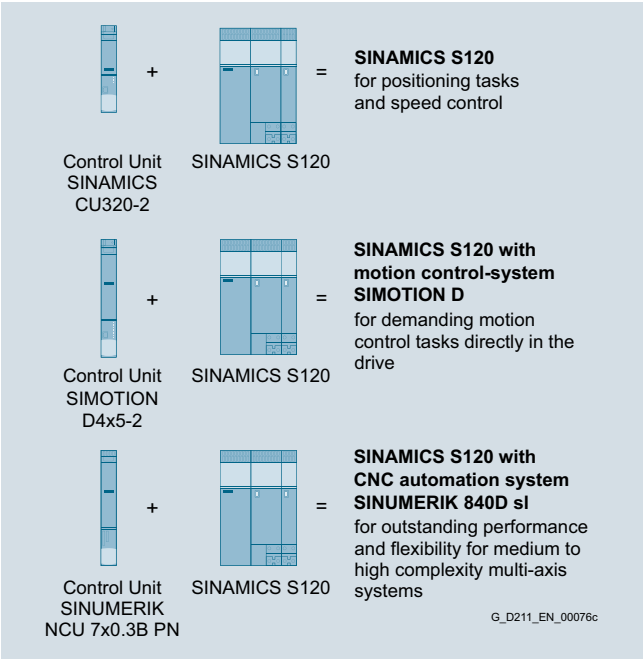

Scalable motion control functions

Totally Integrated Automation – the unique automation platform

With Totally Integrated Automation (TIA), Siemens is the only single-source provider to offer an integrated spectrum of products and systems for all industries. Tailored to meet individual customer requirements, industry-specific automation solutions can be implemented efficiently on the basis of TIA. Lower life-cycle costs for plant operation and a significant reduction in time to market result in a marked improvement in productivity and greater investment security.

Easy – Totally Integrated Automation with SINAMICS S120

Apart from SIMATIC, SIMOTION and SINUMERIK, SINAMICS is also one of the core components of TIA. The STARTER commissioning tool is therefore an integral element of the TIA platform. It is thus possible to parameterize, program and commission all components in the automation system using a standardized engineering platform and without any gaps. The system-wide data management functions ensure consistent data and simplify archiving of the entire plant project.

PROFINET – for enhanced performance and open IT communication

PROFINET, the standard fieldbus of the TIA system, is supported by all SINAMICS S120 variants. This Ethernet-based bus enables control data to be exchanged at high speed via PROFINET IO with IRT or RT and makes SINAMICS S120 a suitable choice for integration in top-performance multi-axis applications.

At the same time, PROFINET also uses standard IT mechanisms (TCP/IP) to transport information, e.g. operating and diagnostic data, to higher-level systems. A SINAMICS S120 with this interface can thus easily be integrated into factory IT networks.

PROFIBUS

SINAMICS S120 supports PROFIBUS DP. It provides a high-performance, system-wide communication network which links all automation components: HMI, controls, drives and I/O devices.

© Siemens AG 2017

Overview (continued)

The components of the SINAMICS S120 drive system

SINAMICS S120 drive system

Line-side components
Line reactors
Line filters
Active Interface Modules

Line Modules
Basic Line Modules
Smart Line Modules
Active Line Modules

Power supply
Information on suitable 24 V devices can be found in Catalog KT 10.1

DC link components
Braking Modules
Braking resistors
Capacitor Modules
Control Supply Modules

Control Units
CU310-2
CU320-2

Information about other Control Units can be found in the Catalogs PM 21 (SIMOTION) and NC 62 (SINUMERIK)

Motor Modules
Single Motor Modules
Double Motor Modules

Supplementary system components

Power Modules

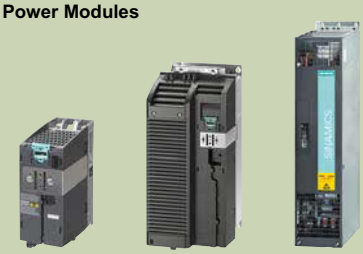

Load-side power components
Motor reactors
dv/dt filters
Sine-wave filters

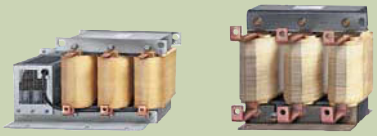

Motors for motion control

SIMOTICS
Servomotors
Main motors
Linear motors
Torque motors

Measuring systems

Motion control encoders

Connection system

MOTION-CONNECT
Power cables
Signal cables

G_D211_EN_00077f

© Siemens AG 2017

Overview

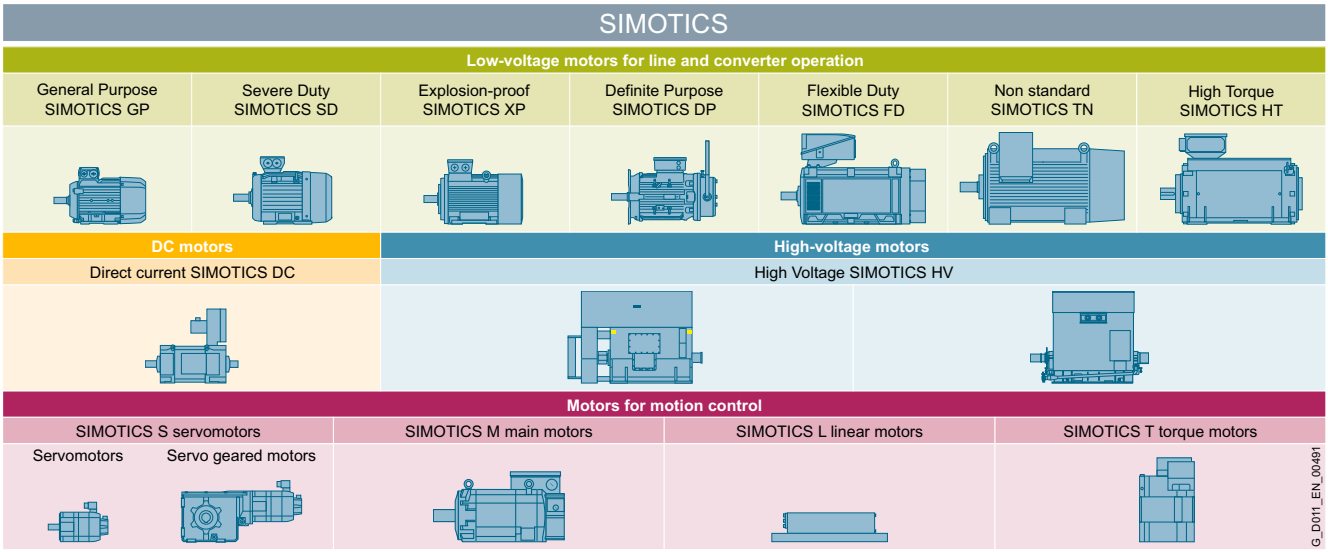

SIMOTICS stands for

- 150 years of experience in building electric motors
- The most comprehensive range of motors worldwide
- Optimum solutions in all industries, regions and power/performance classes
- Innovative motor technologies of the highest quality and reliability
- Highest dynamic performance, precision and efficiency together with the optimum degree of compactness
- Our motors can be integrated into the drive train as part of the overall system
- A global network of skill sets and worldwide service around the clock

A clearly structured portfolio

The entire SIMOTICS product portfolio is transparently organized according to application-specific criteria in order to help users select the optimum motor for their application.

The product range extends from standard motors for pumps, fans and compressors to highly dynamic, precise motion control motors for positioning tasks and motion control in handling applications, as well as production machinery and machine tools, to DC motors and powerful high-voltage motors. Whatever it is that you want to move – we can supply the right motor for the task.

An outstanding performance for any job

A key characteristic of all SIMOTICS motors is their quality. They are robust, reliable, dynamic and precise to assure the requisite performance level for any process and deliver exactly the capabilities demanded by the application in hand. Thanks to their compact design, they can be integrated as space-saving units into installations. Furthermore, their impressive energy efficiency makes them effective as a means of reducing operating costs and protecting the environment.

A dense network of skill sets and servicing expertise around the world

SIMOTICS offers not only a wealth of sound experience gleaned from a development history which stretches back over around 150 years, but also the know-how of hundreds of engineers. This knowledge and our worldwide presence form the basis for a unique proximity to industries which feeds through in tangible terms to the specific motor configuration which is tailored to suit your application.

Our specialists are available to answer all your queries regarding any aspect of motor technology. At any time - wherever you are in the world. When you choose SIMOTICS, therefore, you reap the benefits of a global service network which is continuously accessible, thereby helping to optimize response times and minimize downtimes.

Perfection of the complete drive train

SIMOTICS is perfectly coordinated with other Siemens product families. In combination with the SINAMICS integrated inverter family and the SIRIUS complete portfolio of industrial controls, SIMOTICS fits seamlessly as part of the complete drive train into automation solutions which are based on the SIMATIC, SIMOTION and SINUMERIK control systems.

© Siemens AG 2017

Overview

Overview of motors for motion control applications

Motion control motors				
SIMOTICS S servomotors		SIMOTICS M main motors	SIMOTICS L linear motors	SIMOTICS T torque motors
Servomotors	Servo-geared motors			
	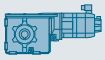	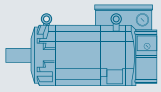	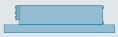	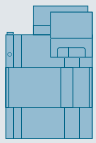
1FK7 1FT7	1FG1	1PH8 1FE1 1FE2	1FN3	1FW3 1FW6
0.05 ... 34.2 kW	0.5 ... 7 kW	2.8 ... 1 340 kW	1.7 ... 81.9 kW	1.7 ... 380 kW
0.08 ... 170 Nm	14 ... 8 100 Nm	13 ... 12 435 Nm	150 ... 10 375 Nm	10 ... 7 000 Nm
up to 10 000 rpm	up to 1 300 rpm	up to 40 000 rpm	up to 836 rpm	up to 1 200 rpm
Applications with high to very high demands regarding dynamic performance and precision, e.g. robots and handling systems, wood, glass, ceramics and stone working, packaging, plastics and textile machines and the machine tool area	In applications such as palletizers, storage and retrieval units with lifting, traversing and fork drives, dosing pumps and actuators	Precise turning, highly dynamic rotary axes, e.g. main drives in presses, printing machines, roller drives and winders in foil machines and other converting applications, main spindle drives in machine tools	Applications with stringent dynamic response and precision requirements for linear movements, e.g. machining centers, turning, grinding, laser machining, handling and machine tool applications	Rotary axis applications with stringent precision and force requirements, e.g. extruders, winders, servo presses, roller drives, rotary axes in machine tools, rotary index tables, tool magazines
D 21.4 NC 62 NC 81 NC 82	D 41	D 21.4 NC 62 NC 82	D 21.4 NC 62	D 21.4 NC 62

G_D011_EN_00492

© Siemens AG 2017

Overview (continued)

Whether it is a servomotor, a main motor, a torque motor or a linear motor – no other manufacturer anywhere in the world offers such an extensive portfolio of motors for motion control applications. Perfectly coordinated for operation with SINAMICS converters, all products in the portfolio impress with their compact dimensions, precision and dynamic response.

SIMOTICS S servomotors
Highly dynamic and extremely compact

Whether they are used for positioning in pick and place applications, as cyclic drives in packaging machines or for path control in handling systems and machine tools: Our permanent-magnet, highly energy efficient SIMOTICS servomotors are the first choice for any application which demands highly dynamic and precise motional sequences. Depending on the application, they are available with various different built-in encoders – from the simple resolver to the high-resolution absolute encoder. The SIMOTICS S product range is rounded off by the SIMOTICS servo geared motors.

SIMOTICS M main motors
Exact rotation at up to 40000 rpm

For applications where continuous, precise rotation of the axes is the primary concern. Thus they are ideally suited for the main drives for presses, as roller drives in printing and paper-making machines, textiles and plastics-processing machines. They can also be deployed as winder drives and in machine tool spindles and hoisting gear. With a power spectrum ranging from 2.8 kW to 1340 kW (3.75 to 1797 hp), they cover virtually every application.

SIMOTICS L linear motors
Improved dynamic response all along the line

The ideal solution for any application which requires linear movements to be performed with maximum dynamic response and precision. The reason: The effects of elasticity, backlash and friction as well as natural oscillation in the drive train are largely eliminated because no mechanical transmission elements such as ball screw, coupling and belt are needed when linear motors are used. This simplifies the machine design and reduces wear.

SIMOTICS T torque motors
Outstanding precision for rotary axes

Optimized for high torques at low rated speeds. With their excellent precision, dynamic response and low wear (they have no mechanical transmission elements), these motors have all the right credentials for use as built-in motors in rotary indexing machines, rotary tables or swivel and rotary axes, e.g. on machine tools. The same also applies to complete torque motors which are typically used as a roller and winder drive in converting applications.

Individual solutions for special applications

There is sometimes no other option but to develop an application-specific solution. Based on our many years of experience, we are able to work with our customers to develop and implement application-specific motor solutions – with a design and performance that are perfectly tailored to meet individual requirements. These have the additional useful benefit that they are highly integrated into our inverter and control system environment.

Optimally coordinated system solutions

SIMOTICS motors are perfectly coordinated with the drive systems of the SINAMICS family. They provide you with precisely tailored, state-of-the-art motion control solutions in all performance classes created using globally available standard components. Electronic rating plates and the ability to integrate the motors via the DRIVE-CLiQ system interface ensure quick commissioning as well as problem-free operation. Thanks to the integral encoders with redundant encoder tracks and safety functions which are integrated in the drive, modern safety concepts are easy to implement. As a result, external safety components are completely unnecessary. All components can be interconnected simply and reliably by means of pre-assembled MOTION-CONNECT signal and power cables.

Powerful tools and competent support

Siemens offers expert advice and efficient tools to help users select the right motor solution. Experienced specialists are always ready to lend a hand in designing mechanically integrated motor solutions.

Focused motor selection and dimensioning: SIZER for Siemens Drives engineering tool

The SIZER for Siemens Drives engineering tool is designed to help you configure a complete drive system including options, accessories and connection systems. SIZER for Siemens Drives allows you to handle any kind of drive – from single drives to complex multi-axis drives. Starting from the type of application in question, the software guides the user step by step through the motor dimensioning process. The advantage: SIZER for Siemens Drives not only provides a full list of components with their order data, but also offers an import function for easy transfer of the motor data into the CAD CREATOR.
www.siemens.com/sizer

Selection and configuring with the Drive Technology Configurator

The Drive Technology Configurator (DT Configurator) helps you select the optimum products for an application – from the motors to the converters/inverters and the associated options. You can also generate comprehensive documentation including data sheets, operating instructions, 2D and 3D dimension drawings, and certificates. You can order the products directly by transferring the selected components to the shopping cart of the Industry Mall.
www.siemens.com/dt-configurator

Integrated: Design planning with the CAD CREATOR

The CAD CREATOR makes the generation of technical data, dimension drawings and CAD data for the motors a quick and simple process. It is easy to transfer the data to the plant documentation and process them further for the mechanical design. The CAD CREATOR is supplied as standard with the SIZER for Siemens Drives engineering tool.
www.siemens.com/cadcreator

© Siemens AG 2017

Overview

MOTION-CONNECT includes connection systems and components which are optimally tailored to individual areas of application. MOTION-CONNECT cables feature state-of-the-art connection systems to ensure fast, reliable connection of different components, and offer maximum quality as well as system-tested reliability.

MOTION-CONNECT power cable and signal cable

MOTION-CONNECT cables are available as fully-assembled power and signal cables or sold by the meter. The pre-assembled cables can be ordered in length units of 10 cm (3.94 in) and can be extended, if necessary.

Whatever your machine requirements, MOTION-CONNECT offers the solution.

- **Robust, high-performance and easy to use**
  thanks to pre-assembled cables with a rugged metal connector in degree of protection IP67 and reliable SPEED-CONNECT quick-release lock
- **Outstanding and proven quality**
  achieved by consistent quality management and system-tested cables

Cables are available in two different qualities – MOTION-CONNECT 500 and MOTION-CONNECT 800PLUS.

MOTION-CONNECT 500	MOTION-CONNECT 800PLUS
• Cost-effective solution for predominantly fixed installation • Tested for travel distances up to 5 m (16.4 ft)	• Meets requirements for use in cable carriers • Oil-resistant • Tested for travel distances of up to 50 m (164 ft)

More information

- Catalogs D 21.4, NC 62, NC 82, PM 21
- Interactive Catalog CA 01
- Internet:
  www.siemens.com/motion-connect
  www.siemens.com/industrymall

© Siemens AG 2017

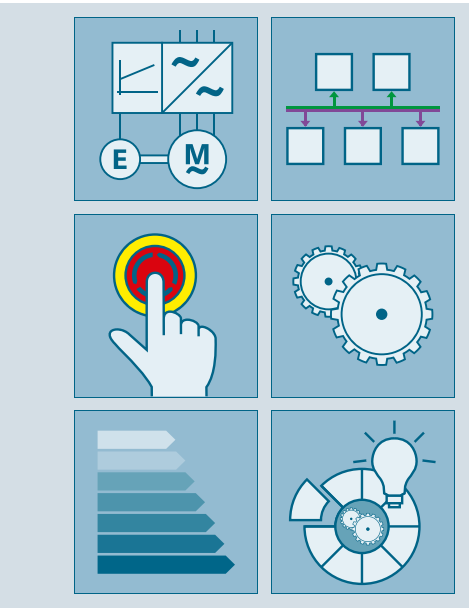

2/2 Firmware functionality
2/2 Introduction
2/2 Basic Drive Functions
2/4 Standard Technology Functions
2/5 Advanced Technology Functions
2/6 Common Engineering
2/6 Applications & Branch know-how

Further information about Firmware functionality can be found on the Internet under:
www.siemens.com/sinamics-firmware

© Siemens AG 2017

Firmware functionality

Overview

The major part of the functionality of SINAMICS drives is implemented in software. This "embedded" **software** delivers the function of the product and is therefore a significant component of the overall product. The embedded software is also known as **firmware**, because it is firmly connected to specific hardware.

In the case of SINAMICS drives, the firmware is subdivided into the **operating system (OS)** with drivers for the hardware and the inverter functions, which are also referred to as the **runtime (RT) functions**.

Introduction

The available firmware functions are so extensive that the overall functional scope has been structured into function groups corresponding to their main applications.

The 8 main groups are:

- Basic Drive Functions
- Standard Technology Functions
- Advanced Technology Functions
- Communication Functions
- Safety Integrated Functions
- Energy Efficiency Functions
- Common Engineering
- Applications & Branch know-how

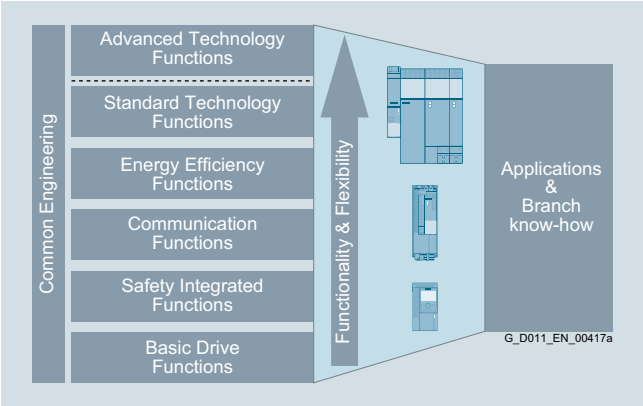

Functionality, including technology and configuration

Basic Drive Functions

The main groups, especially the "Basic Drive Functions", are divided up into further subgroups.

- Control
- Availability
- Setpoints and commands
- Limiters, timers and monitoring functions
- Diagnostics
- Protection

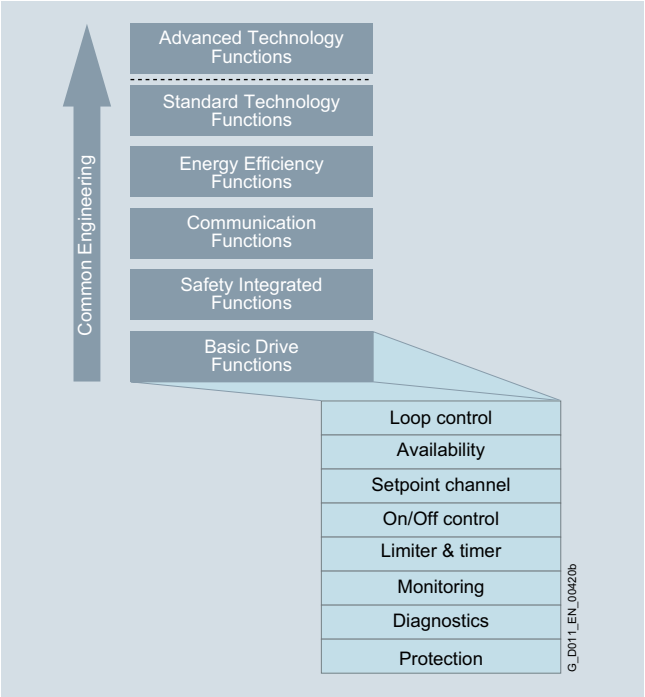

Basic Drive Functions – Control Function

Control

The control methods are the core of the entire inverter firmware. They are responsible for optimum movement of the connected motor and the attached machines. The better the control functions, the faster, better and more smoothly the machine operates, thereby significantly enhancing the quality of the production output.

A distinction is made between the following methods:

- V/f control (open-loop control)
- Vector control (closed-loop control)
- Servo control (closed-loop control)

Further classification refers to the control variables:

- Current control
- Speed control
- Torque control
- Position control
- Technological process control (pressure, flow rate, temperature, fill level, etc.)

© Siemens AG 2017

Overview (continued)

Availability

Availability refers to the frequency ratio, namely how often or seldom a single device restricts the entire production process due to a problem. That is why it is important in terms of availability that a drive enters the faulty state only when it is essential for self-protection. Moreover, it is important that the cause of the pending problem is identified and eliminated as quickly as possible.

Features and measures to increase availability:

- Parallel connections, for example, to maintain emergency operation (possibly also at a lower rating), if a power unit fails
- Automatic restart
- Flying restart
- V_{dc} control with kinetic buffering
- Redundancy (hardware, communication, etc.)

Setpoints and commands

The setpoint channel is the link between the setpoint source and the motor control. The inverter has a special feature that supports simultaneous input of two setpoints. Generation and subsequent modification of the total setpoint (influencing the direction, skip frequency, up/down ramp) take place in the setpoint channel.

Different sources of command usually result from the requirements to operate a drive from different places (on-site/remote), in different situations (standard/emergency mode) and/or different operating. The BICO binector connector technology allows SINAMICS to configure and combine the command and setpoint sources completely individually.

The following can be used for switching:

- Dataset switchover
- Switching elements among the Free Function Blocks (FFB)
- Fixed values

Limiters and monitoring functions

Limiters or limits are used to constrain input and/or output variables as appropriate to the connected machine; this means that not all positioning variables are used over their full range but are limited judiciously to enhance the safety and quality of the production process.

Timers/runtime counters are used to obtain information or make statements about the temporal course of a process.

- Recording application information for manufacturers
- Recording operating times for users
- Configurable timer for monitoring intervals
- Configurable timers for triggering activities at certain intervals (e.g. maintenance work)

Monitoring is used for early detection of conditions that may be detrimental or even dangerous to the connected machine, so that they can be counteracted expediently. If an appropriate countermeasure is not initiated, a protective response of the inverter with probable fault shutdown will ultimately result.

Diagnostics

The "Diagnostics" subgroup comprises all those functions that provide assistance with determining the possible causes of a problem.
If problems occur in a process, or in the driven machine, further interpretation of the measured variables in the inverter is required. To this end, different signals should be correlated with respect to time and then observed.

This includes:

- Error and alarm buffer
- Diagnostic buffer
- List of missing signals that interrupt operation
- Tracing for temporal assignment of signal profiles
- I/O simulation
- Telegram content diagnoses
- Terminal status

Protection

All protection functions counteract any possible damage to the inverter and/or motor. This is why the shutdown thresholds cannot be parameterized but are factory-tuned and permanently set to match the built-in components. Alarm thresholds may be parameterized as a relative variable for shutdown threshold of some monitoring processes. Thus, a countermeasure that is sensitive to the process may still be initiated upon occurrence of the alarm.

Apart from protection of the hardware, protection of the parameterization and therefore protection of the intellectual expertise of the customer from unauthorized access and copying is also an important part of the protection functions.

- Write protection
- Know-how protection
- Copy protection

© Siemens AG 2017

Overview (continued)

Standard Technology Functions

The Standard Technology Functions are not restricted to a specific SINAMICS product family, but they are available in full or at least partially in SINAMICS S120 as well as in SINAMICS G120.

- BICO technology
- Free function blocks (FFB)
- Basic positioner (EPos)
- Technology controller (PID)

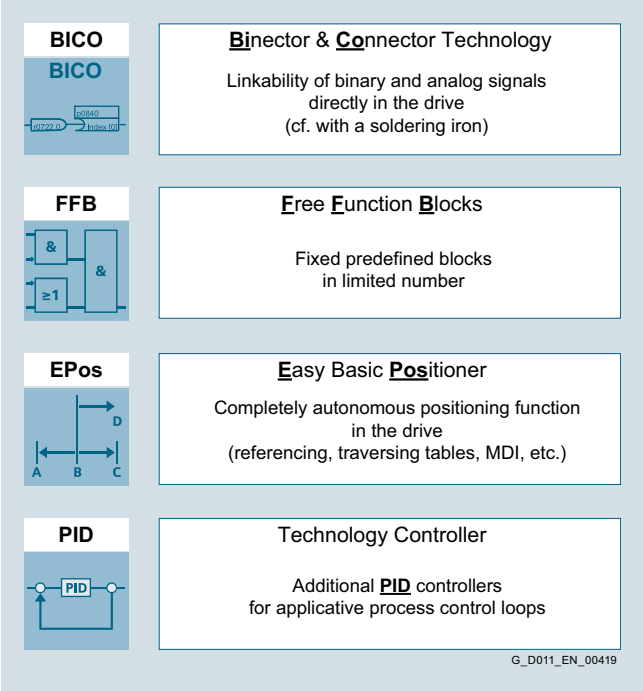

Standard Technology Functions

The Standard Technology Functions significantly expand the application spectrum of the SINAMICS drives because the functions are not permanently and unalterably interconnected; rather, they are interrupted at defined access points and can be connected or wired differently. The BICO technology makes it possible.

The FFBs enable additional, freely interpretable adaptations of the binary and analog signal flow to the given machine application. However, the FFBs are limited in terms of the absolute quantity and the computing intervals (sampling times) that can be selected. These blocks are NOT multi-instance capable.

With Epos, comprehensive positioning tasks are autonomous in SINAMICS (i.e. their solution does not need a higher-level control). And moreover, this integrated functionality is also extremely flexible: It can be used for highly dynamic servo control as well as for simple applications with vector-controlled asynchronous motors. Up to 64 target positions, as well as the respective traversing speeds, can be permanently stored in the drive during commissioning. Axes can be positioned either absolutely or relatively.
It is, however, also possible to transfer these parameters as required from a higher-level controller. This means that target positions and velocities can even be changed on-the-fly during a positioning run.

The technology controller (PID controller) permits all types of simple process controls to be implemented. It can be used, for example, to control the line pressure, fill level, temperature, flow or also tension control or load balancing.

For further information, see Part "Technology Functions".

© Siemens AG 2017

Overview (continued)

Advanced Technology Functions

The Advanced Technology Functions are the clear differentiating feature between the SINAMICS product families of SINAMICS G120 with the CU2xx-2 Control Units and SINAMICS S120 with the CU3x0-2 Control Units.

The Advanced Technology Functions are available only for SINAMICS S120:

- SINAMICS Drive Control Chart (DCC)
- SINAMICS Technology Extensions (TEC)

The Advanced Technology Functions are characterized by maximum flexibility and performance whereby extremely individual and, at the same time, efficient solutions can be achieved.

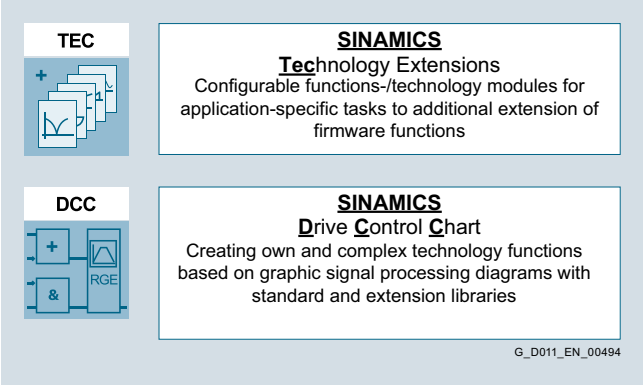

Advanced Technology Functions

SINAMICS DCC comprises the block library, so-called DCB Drive Control Blocks and the DCC Editor for graphical interconnection of blocks. SINAMICS DCC is primarily employed to solve arithmetic and control-related tasks or logic functions associated with complex applications.

In addition to the DCB Standard library, the DCB Extension library can also be used to create applications.

The DCB Extension library is comprised of freely programmable blocks which are created for specific applications using DCB Studio and are then graphically interconnected with the DCC Editor in a similar fashion to standard blocks.

SINAMICS Technology Extensions (TECs) are configurable firmware expansions that are specifically created for use in a customized application with special requirements. This functionality can therefore be subsequently installed as an add-on to the standard scope of firmware functions. One example of a SINAMICS TEC is the VIBX vibration extinction for storage and retrieval systems.

The functional scope of Advanced Technology Functions is scalable and flexible. Depending on the task, you can choose between configurable solutions provided by Siemens or freely created proprietary solutions in the drive.

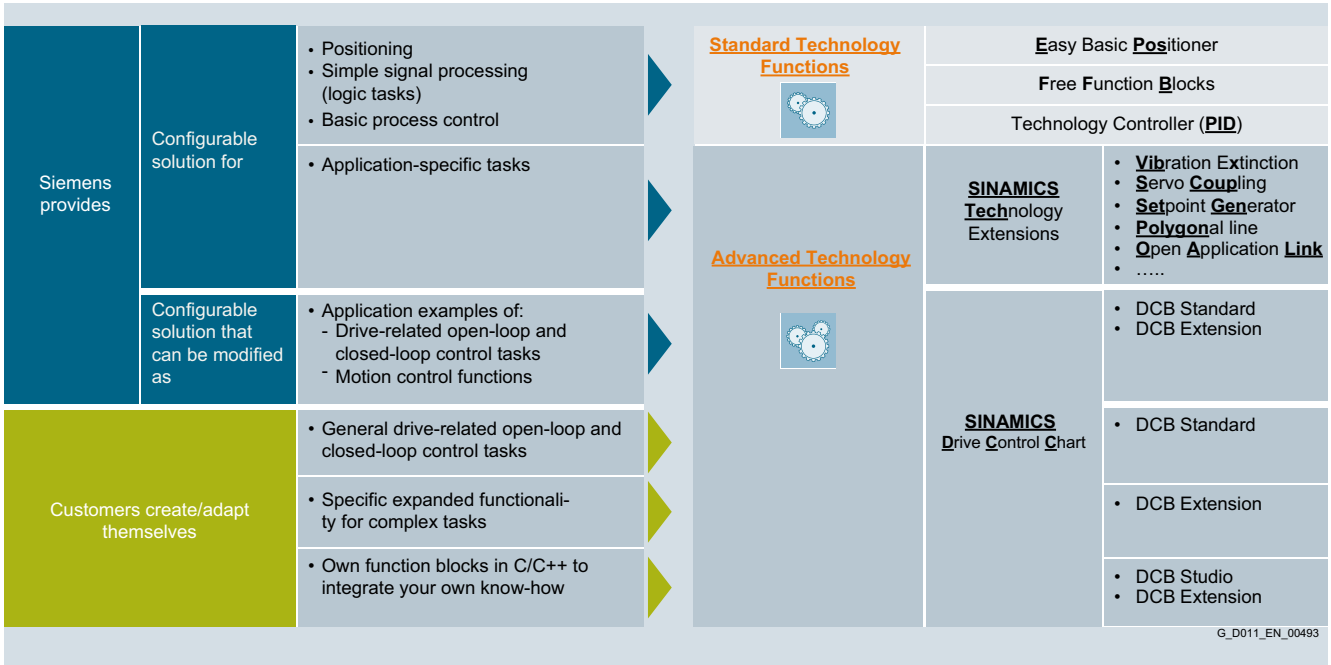

Depending on the technology function, a license may be required for the application (see Part "Control Units and CompactFlash Card").

© Siemens AG 2017

Overview (continued)

Safety Integrated Functions

See "Safety Integrated" section

Communication Functions

See "Communication" section

Energy Efficiency Functions

See "Energy efficiency" section

Common Engineering

All functions of the inverters are implemented to enable a common engineering approach to their handling no matter which type of drive is selected; i.e. if a function is used in drive x, it can be configured intuitively and commissioned in the same way in drive y. Knowledge gained can therefore be reused easily and efficiently. The configuration and commissioning tools in particular (such as SIZER for Siemens Drives, STARTER and SINAMICS Startdrive) reflect this approach.

For further information, see section "Engineering tools".

Applications & Branch know-how

Siemens has applied these technology functions (standard and/or advanced) to generate numerous application solutions. These applications can be downloaded from the Siemens Application Support website at
www.siemens.com/sinamics-applications

The STARTER commissioning tool can then be used to activate and configure the applications and download them to the Control Units.

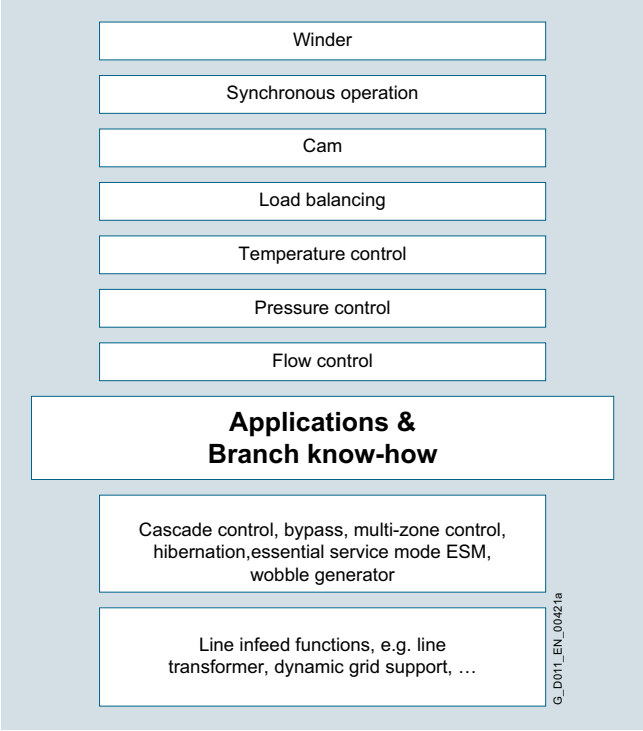

Applications & Branch know-how

Depending on the technology function, a license may be required for the application (see section "Control Units and memory cards").

In some branch-specific Control Units (e.g. CU230P-2) branch-functions are also an integral part of the firmware.

For further information, see section "Drive applications".

More information

Further information about firmware functionality can be found on the Internet at
www.siemens.com/sinamics-firmware

© Siemens AG 2017

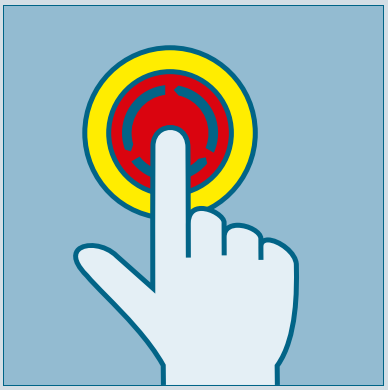

3/2 **Safety Integrated**
3/2 Overview
3/3 Function
3/11 More information

3/12 **Safety Integrated for SINAMICS S120 built-in units**
3/12 Overview
3/14 Function

The Safety Integrated Function Manual contains detailed information about the safety functions.
https://support.industry.siemens.com/cs/document/99668646

Further manuals pertaining to Safety Integrated in drive systems can be found on the Internet at
https://support.industry.siemens.com/cs/ww/en/ps/13231/man

Further information about Safety Integrated in SINAMICS can be found on the Internet at
www.siemens.com/safety-drives

Further information about Safety Integrated in SIMOTION can be found on the Internet at
www.siemens.com/simotion-d-safety-integrated

© Siemens AG 2017

Overview

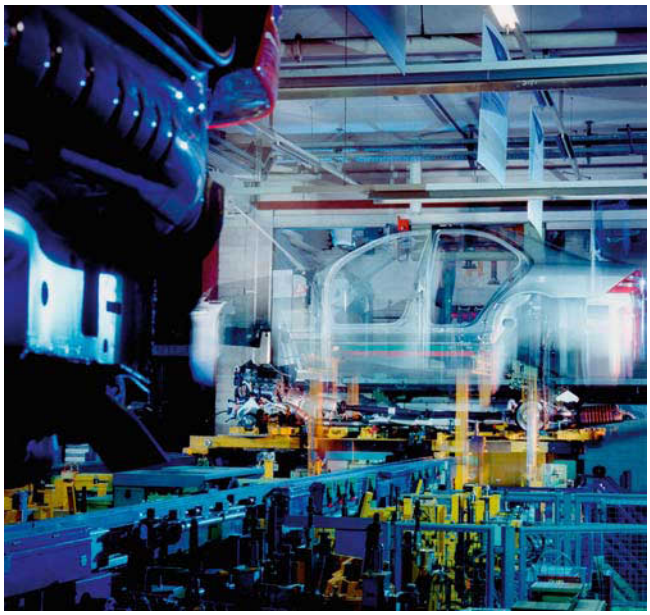

Legal framework

Machine manufacturers and manufacturing plants must ensure that their machines or plants cannot cause danger due to malfunctions in addition to the general risks of electric shock, heat or radiation.

In Europe, for example, compliance with the Machinery Directive 2006/42/EC is legally stipulated by the EU work safety directive. In order to ensure compliance with this directive, it is recommended that the corresponding harmonized European standards are applied. This triggers the "assumption of conformity" and gives manufacturers and operators the legal security in terms of compliance with both national regulations and EU directives. The machine manufacturer uses the CE marking to document the compliance with all relevant directives and regulations in the free movement of goods.

Safety-related standards

Functional safety is specified in various standards. For example, EN ISO 12100 specifies standards pertaining to machine safety (risk assessment and risk reduction). IEC 61508 specifies basic requirements for electronic and programmable safety-related systems. EN 62061 (only applicable for electrical and electronic control systems) and EN ISO 13849-1, which has replaced EN 954-1, define the functional and safety-related requirements of safety-oriented control systems.

The above-mentioned standards define different safety requirements that the machine has to satisfy in accordance with the risk, frequency of a dangerous situation, probability of occurrence and the opportunities for recognizing impending danger.

- EN ISO 13849-1:
  Performance Level PL a ... e; Category B, 1 ... 4
- EN 62061:
  Safety Integrity Level SIL 1 ... 3

Trend toward integrated safety systems

The trend toward greater complexity and higher modularity of machines has seen a shift in safety functions away from the classical central safety functions (for example, shutdown of the complete machine using a main disconnecting means) and into the machine control system and the drives. This is often accompanied by a significant increase in productivity because the equipping times are shortened. Depending on the type of machine, it may even be possible to continue manufacturing other parts while equipping is in progress.

Integrated safety functions act much faster than those of a conventional design. The safety of a machine is increased further with Safety Integrated. Furthermore, thanks to the faster method of operation, safety measures controlled by integrated safety systems are perceived as less of a hindrance by the machine operator, therefore significantly reducing the motivation to consciously bypass safety functions.

© Siemens AG 2017

Function

The safety functions integrated in SINAMICS drives are described below.

	SINAMICS V		SINAMICS G										SINAMICS S		
	V20	V90	G110	G110D	G120C	G120P/ G120	G120			G110M	G120D		S110	S120	
						CU230P-2	CU240B-2	CU240E-2	CU250S-2	CU240M	CU240D-2	CU250D-2	CU305	CU310-2	CU320-2
Functions															
STO	–	✓	–	✓	✓	–	–	✓	✓	✓	✓	✓	✓	✓	✓
SS1	–	–	–	–	–	–	–	✓ 1)	✓	–	✓ 1)	✓	✓	✓	✓
SS2	–	–	–	–	–	–	–	–	–	–	–	–	✓ 2)	✓ 2)	✓ 2)
SOS	–	–	–	–	–	–	–	–	–	–	–	–	✓ 2)	✓ 2)	✓ 2)
SBC	–	–	–	–	–	–	–	–	✓	–	–	–	✓	✓	✓
SBT	–	–	–	–	–	–	–	–	–	–	–	–	–	✓ 2)	✓ 2)
SLS	–	–	–	–	–	–	–	✓ 1)	✓ 2)	–	✓ 1)	✓ 1)	✓ 2)	✓ 2)	✓ 2)
SSM	–	–	–	–	–	–	–	✓ 1)	✓ 2)	–	✓ 1)	✓ 1)	✓ 2)	✓ 2)	✓ 2)
SDI	–	–	–	–	–	–	–	✓ 1)	✓ 2)	–	✓ 1)	✓ 1)	✓ 2)	✓ 2)	✓ 2)
SLP	–	–	–	–	–	–	–	–	–	–	–	–	–	✓ 2)	✓ 2)
SP	–	–	–	–	–	–	–	–	–	–	–	–	–	✓ 2)	✓ 2)
Control															
PROFIsafe	–	–	–	–	✓	–	–	✓	✓	✓	✓	✓	✓	✓	✓
F-DI	–	✓	–	–	✓	–	–	✓	✓	✓	✓	✓	✓	✓	✓

Safety functions integral to the SINAMICS drives

SINAMICS drives are characterized by a large number of integrated safety functions. In combination with the sensors and safety control required for the safety functionality, they ensure that highly-effective protection for persons and machines is implemented in a practice-oriented manner.

They comply with the requirements of the following safety categories:

- PL d and Category 3 according to EN ISO 13849-1
- SIL 2 according to IEC 61508 and IEC 61800-5-2

Note:

The Safe Brake Test (SBT) diagnostic function meets the requirements for Category 2 according to EN ISO 13849-1.

The Safety Integrated functions are generally certified by independent institutes. You can obtain the corresponding test certificates and manufacturer's declarations from your Siemens contacts.

The integrated safety functions that are currently available are described below. Their functional safety satisfies the requirements defined in the international standard IEC 61800-5-2 for variable-speed drive systems.

The safety functions integrated into the SINAMICS drive system can be roughly divided into four categories:

- **Functions for safely stopping a drive**
  - Safe Torque Off (STO)
  - Safe Stop 1 (SS1)
  - Safe Stop 2 (SS2)
  - Safe Operating Stop (SOS)
- **Functions for safe brake management**
  - Safe Brake Control (SBC)
  - Safe Brake Test (SBT) (this diagnostic function exceeds the scope of IEC 61800-5-2)
- **Functions for safely monitoring the motion of a drive**
  - Safely-Limited Speed (SLS)
  - Safe Speed Monitor (SSM)
  - Safe Direction (SDI)
- **Functions for safely monitoring the position of a drive**
  - Safely-Limited Position (SLP)
  - Safe Position (SP) (this function exceeds the scope of IEC 61800-5-2)

1) With fail-safe Control Unit.

2) With Safety Extended license.

© Siemens AG 2017

Function

Safe Torque Off (STO)

The STO function is the most common and basic drive-integrated safety function. It ensures that no torque-generating energy can continue to affect a motor and prevents unintentional start-ups.

Effect

This function is a mechanism that prevents the drive from restarting unexpectedly, in accordance with EN 60204-1, Section 5.4. The STO function suppresses the drive pulses (corresponds to Stop Category 0 according to EN 60204-1). The drive is reliably torque-free. This state is monitored internally in the drive.

Application

STO has the immediate effect that the drive cannot supply any torque-generating energy. STO can be used wherever the drive will naturally reach a standstill due to load torque or friction in a sufficiently short time or when "coasting down" of the drive will not have any relevance for safety.

STO makes it possible for persons to work safely when the protective door is open (restart interlock) and is used on machines/installations with moving axes, e.g. on handling or conveyor systems.

Customer benefits

The advantage of the integrated STO safety function compared to standard safety technology using electromechanical switchgear is the elimination of separate components and the effort that would be required to wire and service them. Because of the fast electronic switching times, the function provides a shorter reaction time than the conventional solution comprising electromechanical components.

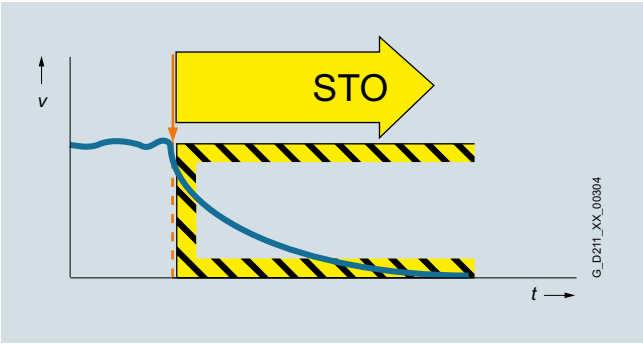

Safe Stop 1 (SS1)

The SS1 function causes a motor to stop rapidly and safely and switches the motor to torque-free mode after coming to a standstill by activating STO.

Effect

The SS1 function can safely stop the drive in accordance with EN 60204-1, Stop Category 1. When the SS1 function is selected, the drive brakes autonomously along a quick-stop ramp and automatically activates the Safe Torque Off and Safe Brake Control functions (if configured) when the parameterized safety delay time expires.

If the variant "SS1 with external stop (SS1E)" is parameterized, the drive does not brake autonomously when the function is selected. In this case, the higher-level control must bring the drive to a standstill within a parameterized STO transition time. The SBR (Safe Brake Ramp) and SAM (Safe Acceleration Monitor) functions are not active. SS1E is a useful function for drives that need to be stopped as a group by the Motion Control system in order to prevent potential damage to the machine or product.

Application

The SS1 function is used when, in the event of a safety-relevant incident, the drive must stop as quickly as possible with a subsequent transition into the STO state (e.g. EMERGENCY STOP). It is thus used to bring large centrifugal masses to a stop as quickly as possible for the safety of the operating personnel, or to brake motors at high speeds as quickly as possible. Examples of typical applications are saws, grinding machine spindles, centrifuges, winders and storage and retrieval machines.

Customer benefits

The targeted stopping of a drive by means of SS1 reduces the risk of danger, increases the productivity of a machine, and allows the safety clearances in a machine to be reduced. The principle is to bring the drive actively to a standstill, compared with just using the STO function. Complex mechanical brakes that are susceptible to wear are not normally required to brake the motor.

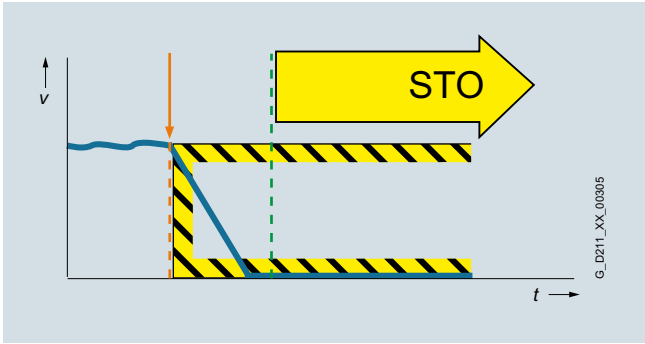

© Siemens AG 2017

Function

Safe Stop 2 (SS2)

The SS2 function brings the motor to a standstill quickly and safely and then activates the SOS function once the motor has stopped.

Effect

The Safe Stop 2 function can safely stop the drive in accordance with EN 60204-1, Stop Category 2. When the SS2 function is selected, the drive brakes autonomously along a quick stop ramp. In contrast to SS1, the drive control remains operational afterwards, i.e. the motor can supply the full torque required to maintain zero speed. Standstill is safely monitored (Safe Operating Stop function).

Application

As with SS1, the SS2 function ensures the quickest possible deceleration of the motor. However, the motor power is not switched off. Instead, a control system prevents it from leaving the standstill position – even if it is affected by external forces. Typical applications for SS2 include machine tools, for example.

Customer benefits

The SS2 function ensures a rapid axis stop. Because the control remains active, after the safety function is deselected, productive operation can continue without referencing. This ensures short setup and standstill times and high productivity.

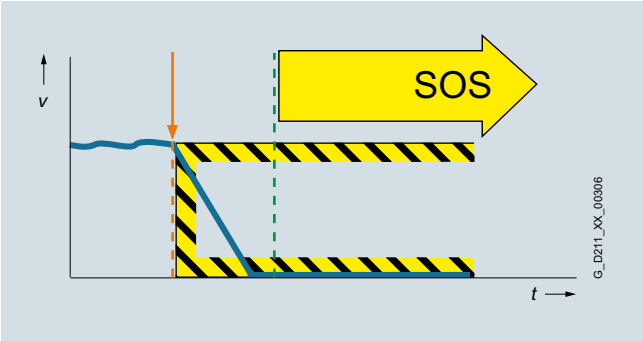

Safe Operating Stop (SOS)

With the SOS function, the stopped motor is held in position by the drive control system and its position monitored.

Effect

The SOS function constitutes safe standstill monitoring. The drive control remains in operation. The motor can therefore deliver the full torque to hold the current position. The actual position is reliably monitored. In contrast to safety functions SS1 and SS2, the speed setpoint is not influenced autonomously. After SOS has been activated, the higher-level control must bring the drive to a standstill within a parameterized time and then hold the position setpoint.

Application

SOS is an ideal solution for all those applications for which the machine or parts of the machine must be at a safe standstill for certain steps, but the drive must also supply a holding torque. It is ensured that despite counter torque the drive remains in its current position. In contrast to SS1 and SS2, the drive does not brake autonomously in this case. It expects the higher-level controller to ramp down the relevant axes as a coordinated group within an adjustable delay time. This can be used to prevent any damage to the machine or product. Typical applications for SOS include winders, converting and packaging machines and machine tools.

Customer benefits

No mechanical components are necessary to keep the axis in position despite any counterforce that may occur. Due to the short switching times and the fact that the drive control always remains active, setup and downtimes are reduced. Recalibration of the axis after exiting the SOS function is not necessary. The axis can immediately be moved again after deactivation of the SOS function.

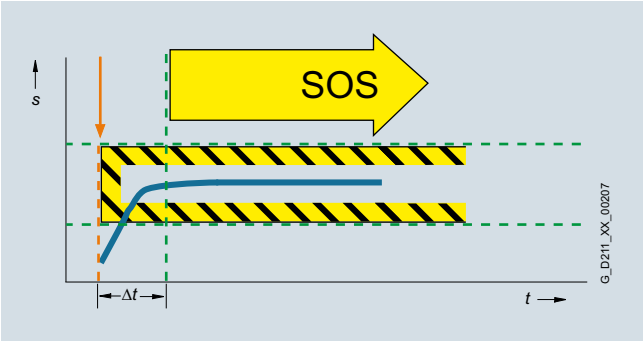

© Siemens AG 2017

Function

Safe Brake Control (SBC)

The SBC function permits the safe control of a holding brake. SBC is always activated in parallel with STO.

Effect

A holding brake which is active in a de-energized state is controlled and monitored using safe two-channel technology. Due to the two-channel control, the brake may still be activated in the event of an insulation fault in the control cable. Errors of this kind are detected early by means of test pulses.

Note:

Safe Brake Control does not detect mechanical faults in the brake itself, such as worn brake linings. For Motor Modules in booksize format, the terminals for the motor brake are integrated. An additional Safe Brake Relay is required for Power Modules in blocksize format. An additional Safe Brake Adapter is necessary for Power Modules in chassis format.

Application

The SBC function is used in conjunction with the functions STO or SS1 to prevent the movement of an axis in the torque-free state, e.g. because of gravity.

Customer benefits

Again, the function saves the use of external hardware and the associated wiring.

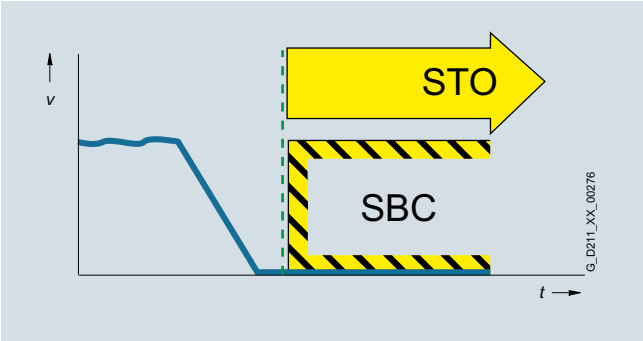

Safe Brake Test (SBT)

The SBT diagnostic function carries out a brake function test at regular intervals or before personnel enter the danger zone.

Effect

A good way to check the proper functioning of brakes that have become worn is to apply a torque to the closed brake. Drive systems that have two brakes, e.g. motor brake and external brake, can be tested with different torque values.

Application

The SBT diagnostic function is suitable for implementing a safe brake in combination with the SBC function.

Customer benefits

The function detects faults or wear in the brake mechanics. Automatically testing the effectiveness of brakes reduces maintenance costs and increases the safety and availability of the machine or plant.

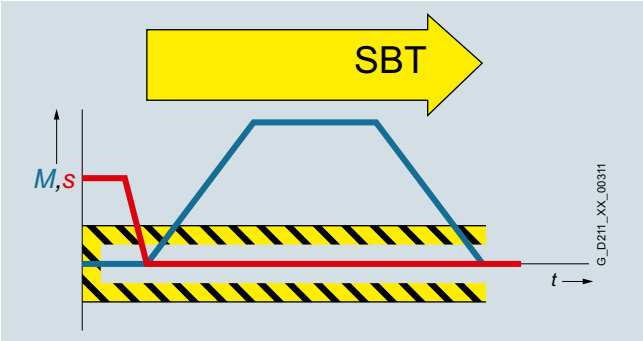

© Siemens AG 2017

Function

Safely-Limited Speed (SLS)

The SLS function monitors the drive to ensure that it does not exceed a preset speed or velocity limit.

Effect

The SLS function monitors the drive against a parameterized speed limit. Four different limit values can be selected. As in the case of SOS, the speed setpoint is not influenced independently. After SLS has been selected, the higher-level control must bring the drive down below the selected speed limit within a parameterizable time. If the speed limit is exceeded, a customizable drive-integrated fault reaction occurs.

The SLS limit stage 1 can be multiplied by a factor that is transferred in 16-bit resolution via PROFIsafe. This allows an almost unlimited number of limits to be specified.

Application

The SLS function is used if people are in the danger zone of a machine and their safety can only be guaranteed by reduced speed. Typical application cases include those in which an operator must enter the danger zone of the machine for the purposes of maintenance or setting up, such as a winder in which the material is manually threaded by the operator. To prevent injury to the operator, the roller may only spin at a safely reduced speed. SLS is often also used as part of a two-stage safety concept. While a person is in a less critical zone, the SLS function is activated, and the drives are only stopped in a smaller area with higher potential risk. SLS can be used not only for operator protection, but also for machinery protection, e.g. if a maximum speed must not be exceeded.

Customer benefits

The SLS function can contribute to a significant reduction in downtime, or greatly simplify or even accelerate setup. The overall effect achieved is a higher availability of the machine. Moreover, external components such as speed monitors can be omitted.

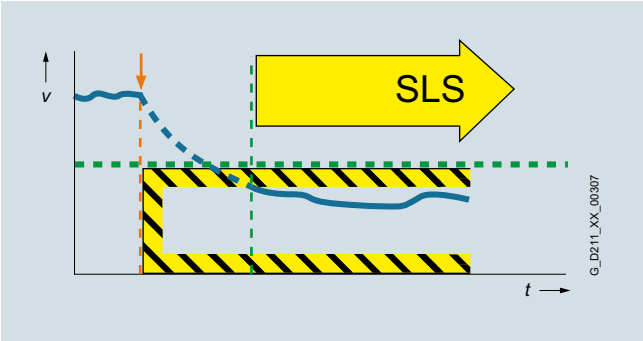

Safe Speed Monitor (SSM)

The SSM function warns when a drive is working below an adjustable speed limit. As long as it remains below the threshold, the function issues a safety-related signal.

Effect

If a speed value drops below a parameterized limit, a safety-related signal is generated. This can, for example, be processed in a safety controller to respond to the event by programming, depending on the situation.

Application

With the SSM function, in the simplest case, a safety door can be unlocked if the speed drops below a non-critical level. Another typical example is that of a centrifuge that may be filled only when it is operating below a configured speed limit.

Customer benefits

Unlike SLS, there is no drive-integrated fault reaction when the speed limit is exceeded. The safe feedback can be evaluated in a safety control unit, allowing the user to respond appropriately to the situation.

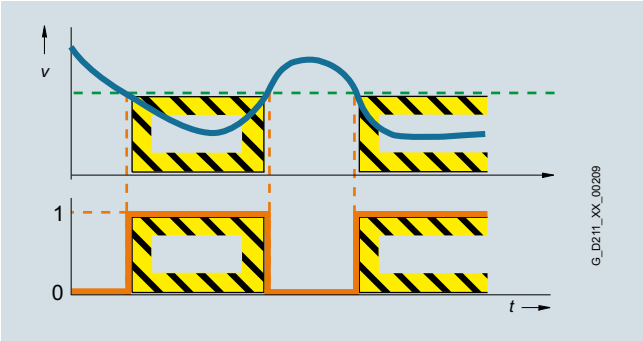

© Siemens AG 2017

Function

Safe Direction (SDI)

The SDI function ensures that the drive can only move in the selected direction.

Effect

Deviation from the direction of motion currently being monitored is detected reliably and the configured drive-integrated fault reaction is initiated. It is possible to select which direction of rotation is to be monitored.

Application

The SDI function is used when the drive may only move in one direction. A typical application is to permit the operator access to a danger zone, as long as the machine is rotating in the safe direction, i.e. away from the operator. In this state, the operator can feed material into the work zone / remove material from the work zone without danger.

Customer benefits

The function saves the use of external components such as speed monitors and the associated wiring. The release of a danger zone while the machine is moving away from the operator increases productivity. Without the SDI function, the machine must be safely stopped during material loading and removal.

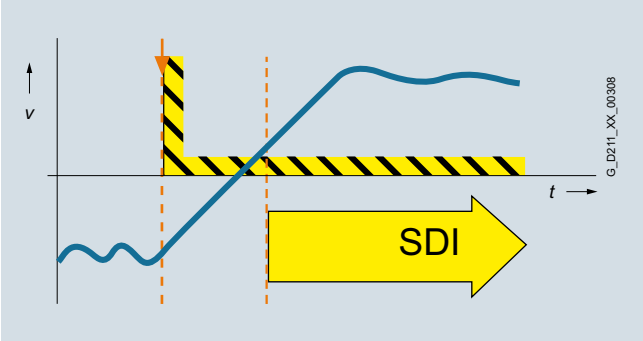

Safely-Limited Position (SLP)

The SLP function monitors the axis to ensure that it remains within the permissible traversing range.

Effect

When SLP is activated, the traversing range limited by the configured software limit switches is safely monitored. If the permitted traversing range is exited, a configurable fault reaction occurs. It is possible to toggle between two traversing ranges, even when the machine is in operation.

Application

SLP is used for applications in which machine operators have to enter a protection area, e.g. for feeding in and removing material. Safe monitoring of the axis position ensures that the axis cannot move into the protection area released for operators and so place them in danger, for example, on storage and retrieval machines, gantry cranes or machining centers.

Customer benefits

SLP can be used for highly-effective protection area monitoring. The function does away with the use of external components such as hardware limit switches and the associated wiring expense. Due to the short reaction time following a limit overshoot, safety clearances can be reduced.

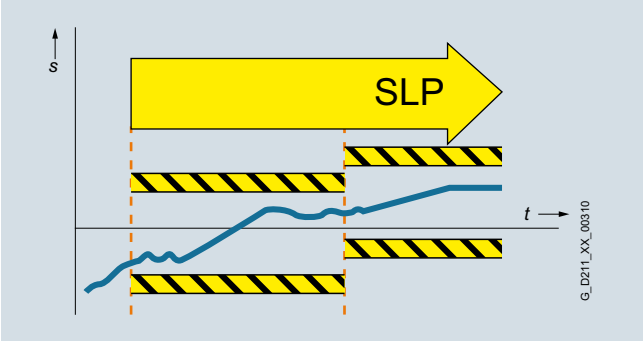

© Siemens AG 2017

Function

Safe Position (SP)

The SP function transfers the actual position values determined safely in the drive over safe PROFIsafe communication to a safety control.

Effect

In contrast to the SLP function that monitors the current actual position value against a limit and, in the case of an overshoot, activates a drive-integrated fault reaction, SP transfers the current actual position values to the safety control. Position monitoring is implemented in the safety program of the control. Extended PROFIsafe telegrams are available for transferring the position values. The position values can be transferred in 16-bit or 32-bit resolution, as required. A time stamp is also transferred with the position values.

Application

Tailor-made safety concepts can be created using the SP function. It is ideal for use on machines that require flexible safety functions. It is extremely versatile and can be used, for example, to implement safe, axis-specific range detection by means of safe cams. The SP function can also be used to implement multi-axis safety concepts, multi-dimensional protection areas and zone concepts.

Customer benefits

Position monitoring or speed monitoring is implemented in the safety program of the control, so the user has the flexibility for implementing tailor-made safety functions. The reaction to a limit overshoot must also be specified in the safety program. This means a higher initial programming outlay, but it does offer the opportunity for initiating different fault reactions.

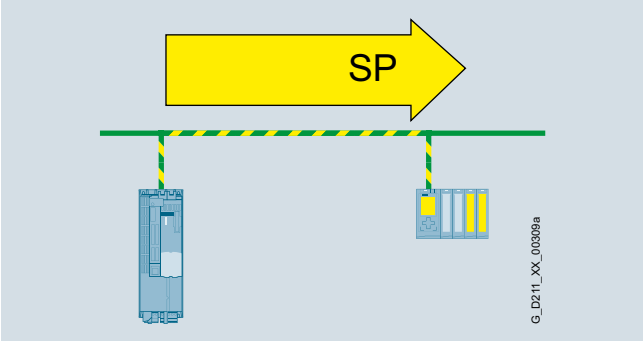

Basic Functions and Extended Functions

The Safety Integrated functions are grouped into Basic Functions and Extended Functions.

The Basic Functions are included in the standard scope of supply. The Extended Functions must be activated by a license.

- Basic Functions
  - Safe Torque Off (STO)
  - Safe Brake Control (SBC)
  - Safe Stop 1 (SS1)
- Extended Functions
  - Safe Stop 1 (SS1) with SBR or SAM
  - Safe Stop 2 (SS2) with SBR or SAM
  - Safe Operating Stop (SOS)
  - Safely-Limited Speed (SLS)
  - Safe Speed Monitor (SSM)
  - Safe Direction (SDI)
  - Safely-Limited Position (SLP)
  - Safe Position (SP)
  - Safe Brake Test (SBT) diagnostic function

For the Extended Functions SS1 and SS2 with SAM, safe acceleration monitoring (SAM) is performed during braking to identify any faults already during the braking phase.

With SS1 and SS2, a Safe Brake Ramp (SBR) can be configured as an alternative.

The Basic Functions – activated via on-board terminals on the device, TM54F Terminal Module or via PROFIsafe – do not require an encoder.

Activation of the integrated safety functions

The safety functions for SINAMICS drives can be activated via terminals, e.g. for use of a conventional safety circuit.

For standalone safety solutions for small to medium sized applications, it is frequently sufficient that the various sensing components are directly hardwired to the drive.

For integrated safety solutions, the safety-relevant sequences are generally processed and coordinated in the fail-safe SIMATIC controller. Here, the system components communicate via the PROFINET or PROFIBUS fieldbus. The safety functions are controlled via the safe PROFIsafe communication protocol.

SINAMICS drives can be easily integrated into the plant or system topology.

PROFIsafe

SINAMICS drives support the PROFIsafe profile based on PROFINET as well as on PROFIBUS.

PROFIsafe is an open communications standard that supports standard and safety-related communication over the same communication path (wired or wireless). A second, separate bus system is therefore not necessary. The telegrams that are sent are continually monitored to ensure safety-relevant communication.

Possible errors such as telegrams that have been lost, repeated or received in the incorrect sequence are avoided. This is done by consecutively numbering the telegrams in a safety-relevant fashion, monitoring their reception within a defined time and transferring an ID for transmitter and receiver of a telegram. A CRC (cyclic redundancy check) data security mechanism is also used.

© Siemens AG 2017

Function

The operating principle of Safety Integrated

Two independent switch-off signal paths

Two independent switch-off signal paths are available. All switch-off signal paths are low active. This ensures that the system is always switched to a safe state if a component fails or in the event of cable breakage. If a fault is discovered in the switch-off signal paths, the STO or SS1 function (depending on parameter settings) is activated and a system restart inhibited.

Two-channel monitoring structure

All the main hardware and software functions for Safety Integrated are implemented in two independent monitoring channels (e.g. switch-off signal paths, data management, data comparison). A cyclic crosswise comparison of the safety-relevant data in the two monitoring channels is carried out.

The monitoring functions in each monitoring channel work on the principle that a defined state must prevail before each action is carried out and a specific acknowledgement must be made after each action. If these expectations of a monitoring channel are not fulfilled, the drive coasts to a standstill (two channel) and an appropriate message is output.

Forced dormant error detection using test stop

The functions and switch-off signal paths must be tested at least once within a defined time in order to meet requirements as per EN ISO 13849-1 and IEC 61508 in terms of timely fault detection. This must be implemented either in cyclic manual mode or the test stop must be automatically initiated as part of the process. The test stop cycle is monitored, and after a specific time has been exceeded, an alarm is output. A test stop does not require a POWER ON. The acknowledgment is set by canceling the test stop request.

Examples of when forced dormant error detection must be performed:

- When the drives are at a standstill after the system has been switched on
- Before the protective door is opened
- At defined intervals (e.g. every 8 hours)
- In automatic mode, time and event-driven

Safe speed/position sensing

Incremental encoders or absolute encoders can be used for safe sensing of the position values on a drive.

Safe actual value sensing relies on redundant evaluation of the incremental tracks A/B that supply sin/cos signals of 1 V_{pp}. Only encoders of the type whose A/B track signals are created and processed using purely analog techniques can be used.

HTL/TTL incremental encoders may also be used. In this case, safe actual value sensing is achieved by using two independent encoders. The minimum possible speed resolution must also be taken into account.

The encoder signals are input via Sensor Modules.

As an alternative, motors with an integrated DRIVE-CLiQ interface can be used. The speed or position actual values are generated directly in the motor as safe values and are transferred to the Control Unit over safe communication via DRIVE-CLiQ.

Certified built-on rotary encoders with DRIVE-CLiQ interface may also be used (see https://support.industry.siemens.com/cs/document/65402168).

The encoder must be mechanically attached in such a manner that the encoder shaft is unable to unplug or slide off. For notes on this, see IEC 61800-5-2: 2016, Table D.16.

A list of Siemens motors that fulfill the electrical and mechanical requirements is available at:
https://support.industry.siemens.com/cs/document/33512621

The following can be used for safe speed/position sensing:

- Single-encoder systems or
- Dual-encoder systems

Single-encoder system

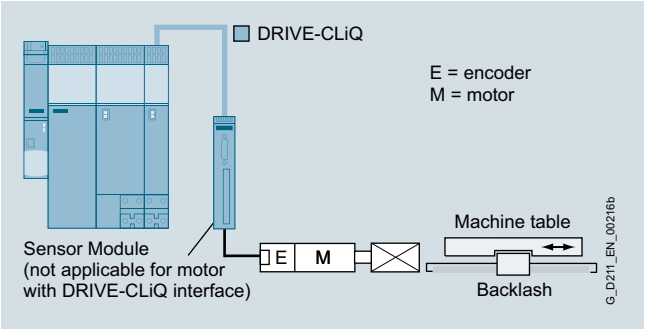

Example: Single-encoder system

In a single-encoder system, the motor encoder is used exclusively for safe actual value sensing.

Dual-encoder system

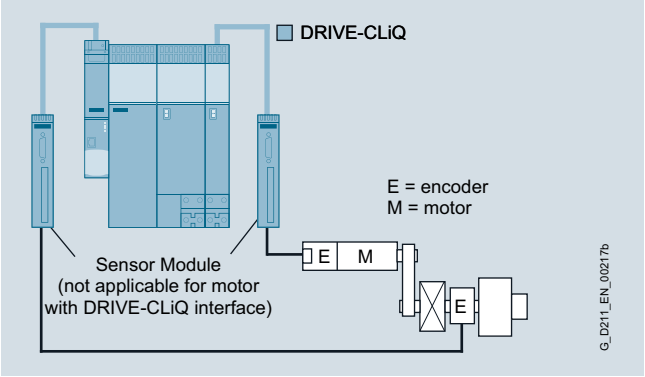

Example: Dual-encoder system

In the case of the dual-encoder system, the safe actual values for a drive are provided by two separate encoders. The actual values are transferred to the Control Unit over DRIVE-CLiQ. When motors without a DRIVE-CLiQ connection are used, a Sensor Module must be provided.

HTL/TTL incremental encoders can be used as an alternative with a dual-encoder system. Either two HTL/TTL encoders, one dual-HTL/TTL encoder or one HTL/TTL encoder and one sin/cos encoder can be used.

© Siemens AG 2017

Function

The safety functions are listed below with criteria for actual value sensing:

	Functions	Abbreviation	With encoder	Without encoder	Description
Basic Functions	Safe Torque Off	STO	Yes	Yes	Safe Torque Off
	Safe Stop 1	SS1	Yes	Yes	Safe stopping process in accordance with stop category 1
	Safe Brake Control	SBC	Yes	Yes	Safe Brake Control
Extended Functions	Safe Torque Off	STO	Yes	Yes	Safe Torque Off
	Safe Stop 1	SS1	Yes	Yes [1)]	Safe stopping process in accordance with stop category 1
	Safe Brake Control	SBC	Yes	Yes	Safe Brake Control
	Safe Operating Stop	SOS	Yes	No	Safe monitoring of the standstill position
	Safe Stop 2	SS2	Yes	No	Safe stopping process in accordance with stop category 2
	Safely-Limited Speed	SLS	Yes	Yes [1)]	Safe monitoring of the maximum speed
	Safe Speed Monitor	SSM	Yes	Yes [1)]	Safe monitoring of the minimum speed
	Safe Direction	SDI	Yes	Yes [1)]	Safe monitoring of the direction of motion
	Safely-Limited Position	SLP	Yes	No	Safely-limited position
	Safe Position	SP	Yes	Yes [2)]	Safe transfer of position values
	Safe Brake Test	SBT	Yes	No	Diagnostic function for safe testing of the required holding torque of a brake

More information

The Safety Integrated Function Manual contains detailed information about the safety functions.
https://support.industry.siemens.com/cs/document/99668646

Further manuals pertaining to Safety Integrated in drive systems can be found on the Internet at
https://support.industry.siemens.com/cs/ww/en/ps/13231/man

Further information about Safety Integrated in SINAMICS can be found on the Internet at
www.siemens.com/safety-drives

Further information about Safety Integrated in SIMOTION can be found on the Internet at
www.siemens.com/simotion-d-safety-integrated

[1)] The use of this safety function without encoder is permitted for induction motors or synchronous motors of the SIEMOSYN series.

[2)] Only for the transmission of relative position values. An encoder is required to transmit absolute position values.

© Siemens AG 2017

Overview

The integrated safety functions of SINAMICS S120 provide highly effective application-oriented protection for personnel and machinery. They are suitable for machines and systems that require flexible safety functions and support the setup of tailored safety concepts.

SINAMICS S120 offers Extended Functions (SS1 with SBR/SAM, SS2, SOS, SLS, SDI, SSM, SLP, SP, SBT) in addition to Basic Functions (STO, SS1, SBC).

The SP function and the SBT diagnostic function go beyond the functional scope according to IEC 61800-5-2.

The Safety Integrated functions are fully integrated in the drive system. They can be activated as follows:

- Via safety-related inputs on the CU310-2 Control Unit
- Via safety-related inputs on the TM54F Terminal Module
- Via PROFIBUS or PROFINET with the PROFIsafe profile

The Safety Integrated functions are implemented electronically and therefore offer short response times compared to solutions with externally implemented monitoring functions.

As an alternative to controlling via terminals and/or PROFIsafe, there is also the option to parameterize several safety functions without selection. In this mode, after parameterization and a POWER ON, these functions are permanently selected.

Example:

"SLS without selection" can be used, for example, to monitor the maximum velocity to prevent the drive from exceeding a mechanical speed limit. For this purpose, using the "without selection" function, an F-DI does not have to be used; an F-CPU is also not required.

Safe speed/position sensing

Incremental encoders or absolute encoders can be used for safe sensing of the position values on a drive. Safe actual value sensing relies on redundant evaluation of the incremental tracks A/B that supply sin/cos signals of 1 V_{pp}. Only encoders of the type whose A/B track signals are created and processed using purely analog techniques can be used. The encoder signals can be input via the Sensor Modules.

HTL/TTL encoders can be used in a dual-encoder system to achieve safe actual value sensing. The minimum possible speed resolution must also be taken into account. The encoder signals are input via the SMC30 Sensor Module.

As an alternative, motors with an integrated DRIVE-CLiQ interface can be used. The speed or position actual values are generated directly in the motor as safe values and are transferred to the Control Unit over safe communication via DRIVE-CLiQ.

The encoder must be mechanically attached in such a manner that the encoder shaft is unable to unplug or slide off. For notes on this, see IEC 61800-5-2: 2016, Table D.16.

A list of Siemens motors that fulfill the electrical and mechanical requirements is available at:

https://support.industry.siemens.com/cs/document/33512621

The following can be used for safe speed/position sensing:

- Single-encoder systems or
- Dual-encoder systems

Single-encoder systems

In a single-encoder system, the motor encoder is used exclusively for safe actual value sensing.

Dual-encoder systems

The safe actual values for a drive are provided by two separate encoders. The actual values are transferred to the Control Unit over DRIVE-CLiQ. When motors without a DRIVE-CLiQ connection are used, a Sensor Module must be provided.

Safe actual value sensing without encoder

The Extended Functions Safe Stop 1 (SS1) with SAM/SBR, Safely-Limited Speed (SLS), Safe Speed Monitor (SSM) and Safe Direction (SDI) are also available for use without encoders (in combination with asynchronous (induction) motors and SIEMOSYN motors). An encoder that is used for the purposes of motor control has no significance for the safety function here.

The Safety Integrated Function Manual contains additional information about the encoderless safety functions.

https://support.industry.siemens.com/cs/ww/en/ps/19904/man

The Extended Functions Safe Stop 2 (SS2), Safe Operating Stop (SOS), Safely-Limited Position (SLP), Safe Position (SP) and Safe Brake Test (SBT) always require a safe encoder system.

Licensing

The Safety Integrated Basic Functions do not require a license.

The Safety Integrated Extended Functions do require a license. It is of no consequence here which safety functions are used and how many. The license can be ordered as an option with the memory card. Alternatively, a single-user license can also be purchased.

© Siemens AG 2017

Overview

Safe Brake Control

The Safe Brake Control is integrated in power units in booksize format.

For the Safe Brake Control (SBC) function, a Safe Brake Relay is required for power units in blocksize format, and a Safe Brake Adapter for power units in chassis format.

The Safe Brake Relay/Safe Brake Adapter and the brake control that is integrated in the booksize/chassis format allows safe control of electro-mechanical motor brakes.

The Safe Brake Relay controls a 24 V DC brake; the Safe Brake Adapter controls a 230 V AC brake. When the STO function is active, the Safe Brake Relay/Safe Brake Adapter safely closes the connected brake. The SBC function monitors the control of the brake, however, not its mechanical functioning.

The inverter controls the connected brake using the motor holding brake function.

External surge suppressors are not required. The cable harnesses for connection to the Power Module are supplied as standard with the Safe Brake Relay. A connecting cable is required to connect the Safe Brake Adapter.

With the Safe Brake Relay/Safe Brake Adapter functions, the brake is controlled in accordance with IEC 61508 SIL 2 and EN ISO 13849-1 PL d and Category 3.

Safe Brake Relay

Safe Brake Adapter

© Siemens AG 2017

Function

Function	Control	Underlying function	Reaction to limit overshoot	External set-point input effective	Encoder required [1]	License required
Basic Functions						
STO	• EP terminals on the power unit or CUA31/CUA32 and a DI on the Control Unit • F-DI on TM54F • F-DI on CU310-2 • PROFIsafe	SBC (if activated)	–	No	No	No
SBC	• With STO (immediately or following expiry of the delay time with SS1)	–	–	–	No	No
SS1 Time-driven	• EP terminals on the power unit or CUA31/CUA32 and a DI on the Control Unit • F-DI on TM54F • F-DI on CU310-2 • PROFIsafe	STO following expiry of the parameterized delay time, SBC (if activated)	STO	Can be parameterized	No	No
Extended Functions						
SS1 with SBR/SAM	• F-DI on TM54F • F-DI on CU310-2 • PROFIsafe	Safe Acceleration Monitor (SAM) or Safe Brake Ramp (SBR) during braking. STO and SBC (if activated) following expiry of the parameterized delay time or if the speed falls below the minimum speed limit	STO	Can be parameterized	No	Yes
SS2	• F-DI on TM54F • F-DI on CU310-2 • PROFIsafe	Safe Acceleration Monitor (SAM) during braking. Following expiry of the parameterized delay time SOS	SS1 → STO	No	Yes	Yes
SLS encoderless	• F-DI on TM54F • F-DI on CU310-2 • PROFIsafe • Continuously activated	–	STO, SS1 (can be parameterized)	Yes	No	Yes
SLS	• F-DI on TM54F • F-DI on CU310-2 • PROFIsafe • Continuously activated	–	STO, SS1, SS2 or SOS (can be parameterized)	Yes	Yes	Yes
SOS	• F-DI on TM54F • F-DI on CU310-2 • PROFIsafe	–	SS1 → STO	Yes	Yes	Yes
SSM	• Always active, if configured	–	Signals that the speed has fallen below a specified value (safe checkback signal switches to high)	Yes	No	Yes
SDI	• F-DI on TM54F • F-DI on CU310-2 • PROFIsafe • Continuously activated	–	STO, SS1, SS2 or SOS (can be parameterized)	Yes	No	Yes
SLP	• F-DI on TM54F • F-DI on CU310-2 • PROFIsafe	–	STO, SS1, SS2 or SOS (can be parameterized)	Yes	Yes	Yes
SP	• Always active, if configured	–	–	Yes	Yes	Yes
SBT	• Safety Control Channel • BICO signals • for test stop selection	–	Signals test result. Warning if test failed	Yes	Yes	Yes

[1] Encoderless Safety Extended Functions can be implemented only on request for SINAMICS S120 converters.

© Siemens AG 2017

4/2 **Energy efficiency**
4/2 Success factor Energy Efficiency

4/3 **Energy-efficient drives**
4/4 Overview of energy-saving functions for SINAMICS drives

Further information about energy efficiency including references from industrial production can be found at:
www.siemens.com/energy-efficiency
www.siemens.com/energysaving

© Siemens AG 2017

Energy efficiency

Overview

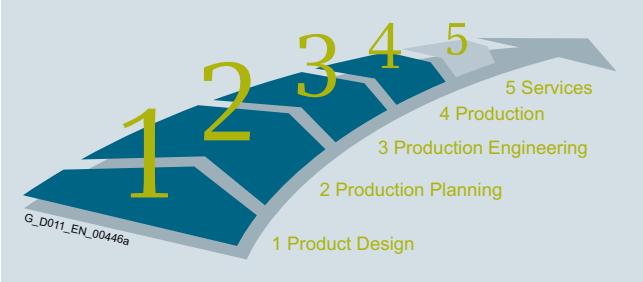

Success factor Energy Efficiency

Siemens helps you to optimize your energy demand, reduce your energy costs and increase your competitive advantage

Industry is facing enormous challenges:
Production processes need to be highly productive, energy-efficient, and resource-saving. Siemens is offering an energy efficiency concept that continually and systematically reduces the power consumption of machines and equipment and thereby boosts the competitive advantage of industrial producers. When implementing energy-efficient solutions, Siemens not only assesses the production process as a whole, but also evaluates each individual production step.

1 Product Design

Improve your confidence in planning outcomes! It is important to know the costs associated with the operation of a production machine so that these can be taken into account in the machine design. For example, the SinaSave software application can help you to calculate how soon you will recoup your investment if you purchase an energy-efficient drive. The Mechatronic Support simulation package will also provide you with the means to test and optimize your machine concept, Helping you to save time, energy and operating expenses. See also the SIZER for Siemens Drives engineering tool.
SinaSave: www.siemens.com/sinasave
SIZER for Siemens Drives: www.siemens.com/sizer

2 Production Planning

Make your plant more profitable! It is possible to carry out an on-screen simulation of individual machines and the entire production process. By doing this, you can optimize the efficiency and productivity of production processes. For example, you can use the digital models and analysis functions provided by the Plant Simulation tool in order to optimize the motion sequences of your machines, prevent load peak overlaps, recover energy and optimize speeds.
Plant Simulation: www.siemens.com/tecnomatix

3 Production Engineering

Optimize the workflow! The SIMATIC Energy Manager PRO management tool helps you to achieve efficient control of energy and costs. But this requires perfectly coordinated communication and operation between hardware and software. Using the TIA Portal engineering framework, for example, it is easy to set up and optimize every single engineering process. You can then see at a glance the areas in your plant that can be made more productive and environmentally friendly. See also the STARTER commissioning tool and the SINAMICS Startdrive commissioning tool.

SIMATIC Energy Manager PRO:
www.siemens.com/energymanagerpro
TIA-Portal: www.siemens.com/tia-portal
STARTER: www.siemens.com/starter
SINAMICS Startdrive: www.siemens.com/startdrive

4 Production

Use innovative drive technology to reduce your energy consumption! The energy-efficient components and systems developed by Siemens can cut the energy consumption of a plant. Important components in an energy-efficient plant are, for example, frequency inverters with regenerative feedback functions for applications with variable speeds or soft starters for fixed-speed drives. With its PROFIenergy system, Siemens is also offering solutions that permit centralized shutdown of loads or entire production units during production breaks – a vendor- and device-neutral interface for flexible use over short or long production breaks.

5 Services

Improve your productivity and efficiency while reducing total costs! With its Energy & Environmental Services, Siemens is offering a tailored consultancy that will provide you with the necessary support in designing and implementing systematic energy and environmental management solutions. It will give you the satisfaction of achieving maximum energy efficiency throughout your company.

More information

Further information about energy efficiency including references from industrial production can be found at
www.siemens.com/energy-efficiency
www.siemens.com/energysaving

© Siemens AG 2017

Overview

Energy-efficient SINAMICS drives save energy in an intelligent way

Exploit energy-saving potential and optimize energy consumption: You can – with intelligent SINAMICS drives Depending on the application in question, energy consumption can be controlled by motor speed adjustment to suit the individual process and achieve the greatest possible energy savings. The energy consumption of drives for turbomachines can be cut by as much as 60 %. Regenerative feedback is also an option for many applications. Our portfolio of frequency inverters is the most comprehensive on the market and the first choice for anyone seeking an energy-efficient drive – at low-voltage or medium-voltage level.

Energy-efficient drives with intelligent functions

Depending on the application and load profile, the intelligent energy-saving functions of SINAMICS drives can cut energy consumption.

PROFIenergy

Provides energy-related status data for the system components to create transparency for the energy management; energy savings by selective shutdown of plants or plant sections.

ECO mode

In ECO mode, the operating point of the motor in the partial-load range is automatically adjusted and optimized. This reduces motor losses, for example, in machines that do not need a high torque over the entire operating range.

Hibernation mode

Variable-speed drives that are not required to operate continuously are switched to standby or “Hibernation mode". The drive is restarted again as soon as it is needed.

Bypass mode

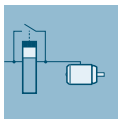

In bypass mode it is possible to "bypass" the inverter electrically as soon as the motor is frequently operating close to its rated speed. This solution helps to reduce inverter losses and so increase overall efficiency.

Cascading

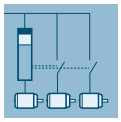

In pump, fan and compressor applications involving high outputs, the entire power demand is distributed among several motors. Phased connection and disconnection by means of partially or fully controlled cascades in combination with inverters make a drive system more energy-efficient.

Energy balancing

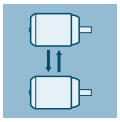

Through the use of inverters with coupled drives, energy is exchanged through the common DC link. Through the direct energy exchange from one inverter to the next, it is possible to minimize power losses in the system.

Reactive power compensation

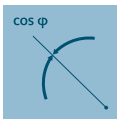

The use of SINAMICS inverters with Active Line Modules reduces the capacitive and/or inductive reactive power in the machine. It is then possible to dispense with costly reactive power compensation systems.

Kinetic energy buffering

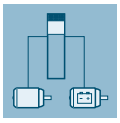

With dynamic reversing operations in single-axis and multi-axis systems, the kinetic energy available in the system is reused. A motor connected to the common DC link is used to buffer kinetic energy.

Electrical energy buffering

With dynamic reversing operations in single-axis and multi-axis systems, the kinetic energy available in the system is reused. A capacitor module connected to the common DC link is used to buffer electrical energy.

Optimized pulse pattern

Thanks to optimized clock frequency and pulse pattern, SINAMICS G and SINAMICS S are perfectly suited to SIMOTICS motors. The benefits: Optimization of performance and system efficiency, reduced system losses as well as lower temperature and noise levels.

Energy usage counter/Energy saving counter

Actual energy usage can be displayed during operation. Furthermore, an energy saving counter can be installed to indicate the cumulative energy savings during machine operation as compared to a fixed-speed application.

Regenerative feedback

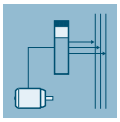

In conventional drive systems, the energy produced during braking is converted to heat using braking resistors. SINAMICS G and SINAMICS S inverters with regenerative feedback capability need no braking resistor, and supply the resulting braking energy back into the line.

© Siemens AG 2017

Overview

Overview of energy-saving functions for SINAMICS drives

Energy-saving function	SINAMICS V	SINAMICS G							SINAMICS S	
	V20	G110	G110D	G120C	G120P	G120	G110M	G120D	S110	S120
ECO mode	✓	–	–	✓	✓	✓	✓	✓	✓	✓
Hibernation mode	✓	–	–	–	✓	✓ with CU230P-2 Control Unit	–	–	–	–
Bypass mode	–	–	–	–	✓	✓ with CU230P-2 Control Unit	–	–	–	✓
Cascading	✓	–	–	–	✓	✓ with CU230P-2 Control Unit	–	–	–	–
Energy balancing	✓	–	–	–	–	–	–	–	–	✓ for multi-axis drives only
Reactive power compensation	–	–	–	–	–	–	–	–	–	✓ with Active Line Module
Kinetic energy buffering	–	–	–	–	–	–	–	–	–	✓ for multi-axis drives only
Electrical energy buffering	–	–	–	–	–	–	–	–	–	✓ for multi-axis drives only
Optimized pulse pattern	–	–	–	–	–	–	–	–	–	✓
Energy usage counter/Energy saving counter	✓	–	✓	✓	✓	✓	✓	✓	–	✓
Regenerative feedback	–	–	–	–	–	✓ with PM250 Power Module	–	✓	–	✓ with Smart Line Mod-ule or Active Line Module
Communication protocol and profile										
PROFINET	–	–	–	✓	✓	✓ not for CU240B-2 Control Unit	✓	✓	✓	✓
• PROFIenergy	–	–	–	✓	✓	✓ not for CU240B-2 Control Unit	✓	✓	–	✓

© Siemens AG 2017

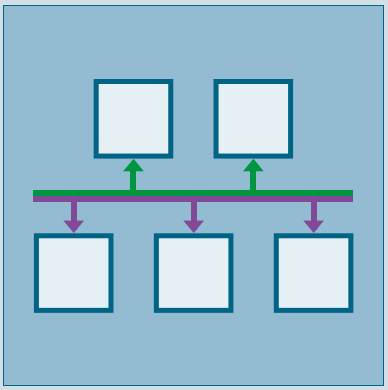

5/2	**Communication**
5/2	Communication overview
5/3	**PROFINET**
5/7	**PROFIdrive**
5/8	**PROFIBUS**
5/9	**Industrial Ethernet**
5/10	**EtherNet/IP**
5/10	**Modbus TCP**
5/10	**CANopen**
5/10	**USS**

Further information regarding PROFINET and PROFIBUS can be found at: www.profibus.com

© Siemens AG 2017

Overview

Communication overview

Digital bus systems are commonly used in industrial automation today. These handle communication between the control level, the machine control, the sensors and actuators. The SINAMICS product family offers integrated communication interfaces in all product groups – which can be used to connect the most important fieldbus systems in the simplest possible way.

The properties and special application areas of the different bus systems are described briefly below.

Protocol	SINAMICS V		SINAMICS G										SINAMICS S		
	V20	V90	G110	G110D	G120C	G120P/ G120	G120			G110M	G120D		S110	S120	
						CU230P-2	CU240B-2	CU240E-2	CU250S-2	CU240M	CU240D-2	CU250D-2	CU305	CU310-2	CU320-2
PROFINET	–	✓	–	–	✓	✓	–	✓	✓	✓	✓	✓	✓	✓	✓
- PROFINET RT	–	✓	–	–	✓	✓	–	✓	✓	✓	✓	✓	✓	✓	✓
- PROFINET IRT isochronous	–	✓	–	–	–	–	–	–	–	–	–	–	✓	✓	✓
- PROFINET IRT not isochronous	–	✓	–	–	✓	✓	–	✓	✓	✓	✓	✓	✓	✓	✓
- PROFINET Shared Device	–	–	–	–	✓	✓	–	✓	✓	✓	✓	✓	✓	✓	✓
- PROFINET media redundancy MRP (surge prone)	–	–	–	–	✓	✓	–	✓	✓	✓	✓	✓	✓	✓	✓
- PROFINET media redundancy MRPD (surge free)	–	–	–	–	✓	✓	–	✓	✓	✓	✓	✓	✓	✓	✓
- System redundancy S2	–	–	–	–	–	–	–	–	–	–	–	–	–	✓	✓
- PROFIsafe	–	–	–	–	✓	–	–	✓	✓	✓	✓	✓	✓	✓	✓
- PROFIenergy	–	–	–	–	✓	✓	–	✓	✓	✓	✓	✓	–	✓	✓
- PROFIdrive application class 1	–	✓	–	–	✓	✓	✓	✓	✓	✓	✓	–	✓	✓	✓
- PROFIdrive application class 3	–	✓	–	–	–	–	–	–	✓	–	–	✓	✓	✓	✓
- PROFIdrive application class 4	–	✓	–	–	–	–	–	–	–	–	–	–	✓	✓	✓
PROFIBUS DP	–	–	–	–	✓	✓	✓	✓	✓	✓	✓	✓	✓	✓	✓
- PROFIBUS DP equidistance and isochronous mode	–	–	–	–	–	–	–	–	–	–	–	–	✓	✓	✓
- PROFIBUS DP peer-to-peer communication	–	–	–	–	✓	✓	✓	✓	✓	✓	✓	✓	✓	✓	✓
EtherNet/IP	–	–	–	–	✓	✓	–	✓	✓	✓	✓	✓	–	–	✓
Modbus TCP	–	–	–	–	–	–	–	–	–	–	–	–	–	✓	✓
Modbus RTU	✓	✓	–	–	✓	✓	✓	✓	✓	✓	–	–	–	–	–
AS-Interface	–	–	–	✓	–	–	–	–	–	✓	–	–	–	–	–
BACnet MS/TP	–	–	–	–	–	✓	–	–	–	–	–	–	–	–	–
CANopen	–	–	–	–	–	–	–	–	✓	–	–	–	–	–	✓
USS	✓	✓	✓	✓	✓	✓	✓	✓	✓	✓	–	–	✓	✓	✓
FLN P1	–	–	–	–	–	✓	–	–	–	–	–	–	–	–	–
Web server	–	–	–	–	–	–	–	–	–	–	–	–	–	✓	✓

© Siemens AG 2017

Overview

G_D211_XX_00050

PROFINET – the Ethernet standard for automation

PROFINET is the world's leading Industrial Ethernet standard for automation with more than 10 million nodes installed worldwide.

PROFINET makes companies more successful, because it speeds up processes and raises both productivity and plant availability.

Your advantages at a glance

Flexibility	Efficiency	Performance
Tailor-made plant concepts	Optimal use of resources	Increased productivity
Industrial Wireless LAN	One cable for all purposes	Speed
Safety	Device/network diagnostics	High precision
Flexible topologies	Energy efficiency	Large quantity structures
Open standard	Easy cabling	High transmission rate
Web tools	Fast device replacement	Redundancy
Expandability	Ruggedness/stability	Fast start-up

G_IK10_XX_10304

© Siemens AG 2017

Overview (continued)

Flexibility

Short response times and optimized processes are the basic requirements for competitiveness in global markets because the product lifecycles are increasingly becoming shorter.

PROFINET ensures maximum flexibility in plant structures and production processes and enables innovative machine and plant concepts to be implemented. For example, mobile devices can also be integrated at locations that are difficult to access.

Flexible topologies

In addition to the linear structure characterized by the established fieldbuses, PROFINET also enables the use of star, tree and ring structures. This is made possible by the switching technology via active network components, such as Industrial Ethernet switches and media converters, or by integrating switch functionality into the field devices. This creates greater flexibility for the planning of machines and plants, as well as reducing the cabling requirements.

The PROFINET network can be installed without any specialist knowledge at all and meets all requirements that are relevant in the industrial environment. The "PROFINET Installations Guidelines" assist manufacturers and users with network planning, installation and commissioning. Symmetrical copper cables or RFI-resistant fiber-optic cables are used, depending on the application. Devices from different manufacturers are easily connected via standardized and rugged plug connectors (up to IP65/IP67 degree of protection).

By integrating switch functionality into the devices, linear structures can be created that are directly oriented toward an existing machine or plant structure. This reduces cabling overhead and cuts down on components such as external switches.

IWLAN

PROFINET also supports wireless communication with Industrial Wireless LAN, opening up new fields of application. For example, technologies subject to wear, such as trailing cables, can be replaced and the use of automated guided vehicle systems and mobile operator terminals becomes possible.

Safety

The PROFIsafe safety profile, which has been tried and tested with PROFIBUS and which permits the transmission of standard and safety-related data on a single bus cable, can also be used with PROFINET. No special network components are necessary for fail-safe communication, which means that standard switches and standard network transitions can continue to be used without any restrictions. In addition, fail-safe communication is equally possible via Industrial Wireless LAN (IWLAN).

Open standard

PROFINET, the open multi-vendor standard (IEC 61158/IEC 61784), is supported by PROFIBUS and PROFINET International (PI). It stands for maximum transparency, open IT communication, network security and simultaneous real-time communication.

Thanks to its openness, PROFINET provides the basis for a standardized automation network in the plant, to which all other machines and devices can be connected. Even the integration of existing plant components, for example with PROFIBUS, presents no problems due to the use of network transitions.

Use of Web tools

Thanks to the unrestricted support of TCP/IP, PROFINET permits the use of standard Web services in the device, such as Web servers. Irrespective of the tool used, information from the automation level can be accessed from virtually any location using a commercially available Internet browser. This considerably simplifies commissioning and diagnostics. Users can then decide for themselves how much openness to the IT world they want to allow for their machine or plant. This means that PROFINET can be used simply as an isolated plant network or connected via appropriate security modules, such as the SCALANCE S modules, to the office network or the Internet. In this way, new remote maintenance concepts or the high-speed exchange of production data become possible.

Expandability

On the one hand, PROFINET facilitates the integration of existing systems and networks without any great effort or expense. In this way, PROFINET safeguards investments in existing plant components that communicate via PROFIBUS and other fieldbuses such as AS-Interface. On the other hand, additional PROFINET nodes can be added at any time. By using additional network components, network infrastructures can be expanded using cabling or wireless methods – even while the plant is operating.

© Siemens AG 2017

Overview (continued)

Efficiency

Greater global competition means that companies must use their resources economically and efficiently. This applies in particular to production. This is where PROFINET ensures greater efficiency. Simple engineering guarantees fast commissioning, while reliable devices ensure a high level of plant availability. Comprehensive diagnostic and maintenance concepts help to reduce plant downtimes and keep maintenance costs to a minimum.

One cable for everything

PROFINET permits simultaneous fieldbus communication with isochronous mode and standard IT communication (TCP/IP) on one cable. This real-time communication for the transmission of the user/process data and diagnostic data takes place on a single cable. Specific profile communication (PROFIsafe, PROFIdrive and PROFIenergy) can be integrated without any additional cabling. This solution offers a wide scope of functions at a low level of complexity.

Device and network diagnostics

By retaining the tried and tested PROFIBUS device model, the same diagnostics information is available with PROFINET. In addition, module- and channel-specific data can also be read out from the devices during device diagnosis, enabling faults to be located quickly and easily. Apart from the availability of device information, the reliability of the network operation has top priority in the network management.

In existing networks the Simple Network Management Protocol (SNMP) has established itself as the de facto standard for the maintenance and monitoring of the network components and their functions. PROFINET uses this standard and gives users the opportunity to maintain their networks with tools that are familiar to them, such as the SINEMA Server network management software.

For easier maintenance of PROFINET devices, both on-site and remotely via a secure VPN connection, application-specific websites can be set up on the integrated Web server of the field devices using the familiar HTML standard.

Energy efficiency

En route to the green factory: PROFIenergy is a profile that provides functions and mechanisms for PROFINET field devices that support energy-efficient production.

The profile, which is defined by the PNO and is independent of any manufacturers or devices, enables the energy demand and costs to be significantly reduced: Using PROFIenergy, any specific loads that are not currently being used can be switched off. This achieves a noticeable reduction in energy costs during breaks in production. PROFIenergy permits the simple, automated activation and deactivation of technologically related plant components. It is coordinated centrally by means of a higher-level controller and is networked via PROFINET. This ensures that as much energy as possible is saved during longer breaks. Temporarily switching off plant components contributes to the even distribution and most efficient use of energy.

The use of PROFIenergy is made easy for the machine builder by its integration into familiar series of products. In addition, PROFIenergy is defined in such a way that the necessary function blocks can easily be integrated into existing automation systems at a later stage.

Simple wiring

Particularly stringent demands are made on the installation of cabling in the industrial environment. In addition, there is a requirement to set up industry-standard networks in the shortest possible time without any special knowledge.

With FastConnect, Siemens is offering a high-speed installation system that meets all of these requirements. FastConnect is the standard-compliant, industrial cabling system consisting of cables, connectors and assembly tools for PROFINET networks. The time required for connecting terminals is minimized by the simple installation method using just a single tool, while installation errors are prevented by the practical color-coding. Both copper cables and glass fiber optic cables can be easily assembled on site.

Fast device replacement

PROFINET devices are identified by means of a name assigned during configuration. On replacing a defective device, a new device can be recognized from its topology information by the IO controller and a new name can be assigned to it automatically. This means that no engineering tool is necessary for the replacement of equipment.

This mechanism can even be used for the initial commissioning of a complete system. This speeds up commissioning, particularly in the case of series machines.

Ruggedness

An automation network must be robustly protected against external sources of interference. The use of Switched Ethernet prevents faults in one part of the network from affecting the entire plant network. For areas that are particularly prone to radio frequency interference (RFI), PROFINET allows the use of fiber optic cables.

Performance

Productivity and product quality determine the level of success in the market. Precise motion control, dynamic drives, high-speed controllers and the deterministic synchronization of devices are therefore key factors in achieving superior production. They facilitate high production rates and optimum product quality at the same time.

Speed and precision

Fast motion control applications demand precise and deterministic exchange of data. This is implemented by means of drive controllers using isochronous real time (IRT).

With IRT and isochronous mode, PROFINET permits fast and deterministic communication. This synchronizes the various cycles of a system (input, network, CPU processing and output), even in the case of parallel TCP/IP traffic. The short cycle times of PROFINET make it possible to raise the productivity of machines and plants and to guarantee the product quality and high level of precision.

The standardized PROFIdrive profile permits vendor-independent communication between CPUs and drives.

© Siemens AG 2017

Overview (continued)

Large quantity structures

The use of PROFINET makes it possible to overcome the existing restrictions regarding the scope of machines and systems that can be implemented. In one network, several different controllers can interact with their assigned field devices. The number of field devices per PROFINET network is virtually unlimited – the entire range of IP addresses is available.

High data rate

By using 100 Mbit/s in full duplex mode, PROFINET achieves a significantly higher data rate than previous fieldbuses. This means that other plant data can be transmitted over TCP/IP without any problems, in addition to the process data. PROFINET therefore meets the combined industrial demands for simultaneously transmitting high-speed IO data and large volumes of data for additional sections of the application. Even the transmission of large volumes of data, such as that from cameras, has no adverse effect on the speed and precision of the IO data transmission, thanks to PROFINET mechanisms.

Media redundancy

A higher plant availability can be achieved with a redundant installation (ring topology). The media redundancy can be implemented not only with the aid of external switches, but also by means of integrated PROFINET interfaces. Using the media redundancy protocol (MRP), reconfiguration times of 200 ms can be achieved. If the communication is interrupted in just one part of the ring installation this means that a plant standstill is prevented and any necessary maintenance or repair work can be performed without any time pressure.

For motion control applications, PROFINET IRT in ring topologies offers the extended media redundancy for planned duplication (MRPD) which operates in a bumpless mode without any reconfiguration time. If communication is interrupted (e.g. a cable break) the process can continue operating without interruption.

System redundancy

SINAMICS S120 supports the PROFINET function "system redundancy": SINAMICS S120 can now be connected to high-availability systems such as SIMATIC S7-400H with two controllers. No additional hardware is required to make the connection. Complex automation tasks in the process industry, in particular, where plant availability and redundancy of the control system are essential, require reliable communication with a high-availability system. Both controllers of the high-availability system always have access to the SINAMICS S120. In the event of a cable break or failure of a CPU, the other controller takes over, thus ensuring uninterrupted communication.

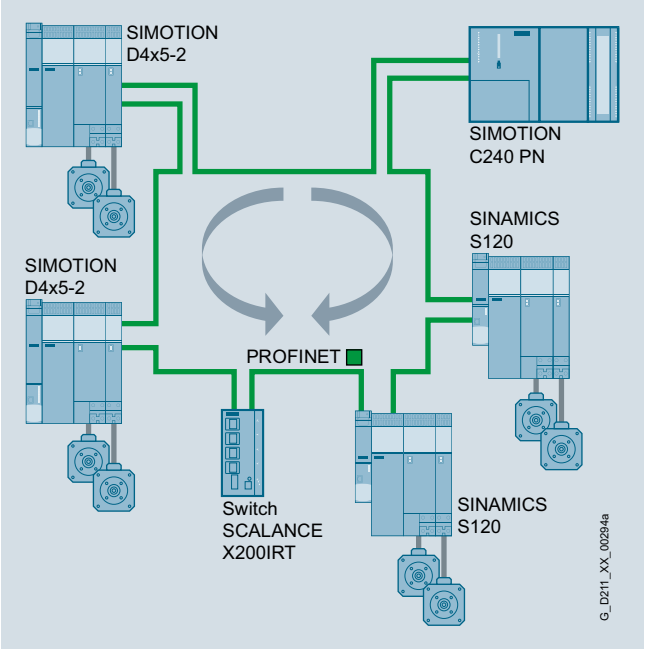

Bumpless media redundancy illustrated by example of SINAMICS S120 with SIMOTION and SCALANCE X200IRT

Benefits

- PROFINET is the open Industrial Ethernet standard for automation
- PROFINET is based on Industrial Ethernet
- PROFINET uses TCP/IP and IT standards
- PROFINET is real-time Ethernet
- PROFINET enables seamless integration of fieldbus systems
- PROFINET supports fail-safe communication via PROFIsafe and also via IWLAN

Integration

PROFINET – SINAMICS S120 functions

SINAMICS S120	CU320-2 PN	CU320-2 DP (CBE20)	CU310-2 PN
PROFINET with IRT (isochronous mode)	✓	✓	✓
Number of ports	2	4	2
Send cycle in ms, min.	0.25	0.5	0.25
Shared device	✓	✓	✓
Bumpless media redundancy (MRPD)	✓	✓	✓
Step-change media redundancy (MRP)	✓	✓	✓
System redundancy S2	✓	–	✓
PROFIsafe	✓	✓	✓
PROFIenergy	✓	✓	✓
PROFIdrive	✓	✓	✓

More information

Further information is available at
www.siemens.com/profinet

© Siemens AG 2017

Overview

PROFIdrive – the standardized drive interface for PROFINET and PROFIBUS

PROFIdrive defines the device behavior and technique to access internal device data for electric drives connected to PROFINET and PROFIBUS – from basic frequency inverters up to high-performance servo controllers.

It describes in detail the practical use of communication functions – slave-to-slave data transfer, equidistance and clock cycle synchronization (isochronous mode) in drive applications. In addition, it specifies all device characteristics which influence interfaces connected to a controller over PROFINET or PROFIBUS. This also includes the state machine (sequence control), the encoder interface, scaling of values, definition of standard telegrams, access to drive parameters etc.

The PROFIdrive profile supports both central as well as distributed motion control concepts.

What are profiles?

For devices and systems used in automation technology, profiles define properties and modes of behavior. This allows manufacturers and users to define common standards. Devices and systems that comply with such a cross-manufacturer profile, are interoperable on a fieldbus and, to a certain degree, can be interchanged.

Are there different types of profiles?

A distinction is made between what are known as application profiles (general or specific) and system profiles:

- Application profiles (also device profiles) predominantly refer to devices (e.g. drives) and include and agreed selection regarding bus communication as well as also specific device applications.
- System profiles describe classes of systems, including master functionality, program interfaces and integration resources.

Is PROFIdrive fit for the future?

PROFIdrive has been specified by the PROFIBUS and PROFINET International (PI) user organization, and is specified as a standard that is fit for the future through standard IEC 61800-7.

The basic philosophy: Keep it simple

The PROFIdrive profile tries to keep the drive interface as simple as possible and free from technology functions. As a result of this philosophy, referencing models as well as the functionality and performance of the PROFINET/PROFIBUS master have either no influence or only a low influence on the drive interface.

One drive profile – different application classes

The integration of drives into automation solutions depends very strongly on the particular drive application. In order to be able to address the complete, huge bandwidth of drive applications – from basic frequency inverters up to synchronized multi-axis systems with a high dynamic performance – using just one profile, PROFIdrive defines six application classes, to which most drive applications can be assigned:

- Class 1 - standard drives (for example pumps, fans, agitators etc..)
- Class 2 - standard drives with technological functions
- Class 3 - positioning drives
- Class 4 - motion control drives with central, higher-level motion control intelligence and the patented "Dynamic Servo Control" positioning concept
- Class 5 - motion control drives with central, higher-level motion control intelligence and position setpoint interface
- Class 6 - motion control drives with distributed motion control intelligence integrated in the drives

Design

The device model of PROFIdrive

PROFIdrive defines a device model based on function modules which cooperate in the device and generate the intelligence of the drive system. These modules have objects assigned to them which are described in the profile and are defined with respect to their functions. The overall functionality of a drive is therefore described through the sum of its parameters.

In contrast to other drive profiles, PROFIdrive defines only the access mechanisms to the parameters as well as a subset of profile parameters (approx. 30) such as the fault buffer, drive control and device identification.

All other parameters are vendor-specific which gives drive manufacturers great flexibility with respect to implementing function modules. The elements of a parameter are accessed acyclically via data records.

As a communication protocol, PROFIdrive uses DP-V0, DP-V1, and the DP-V2 expansions for PROFIBUS including the functions "Slave-to-Slave Communication" and "Isochronous Operation", or PROFINET IO with real-time classes RT and IRT.

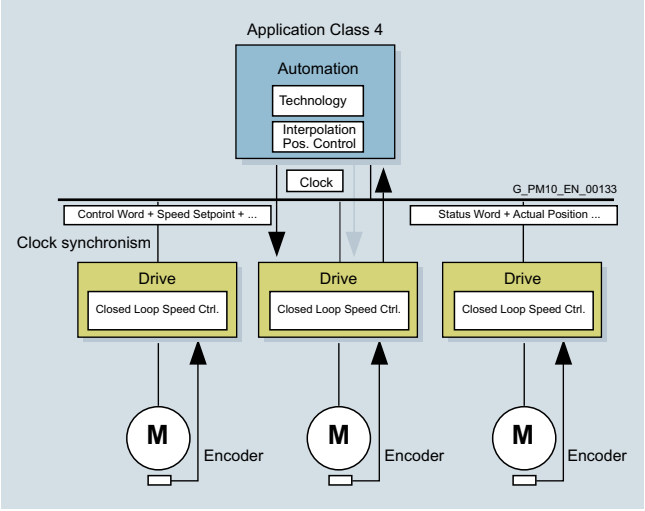

More information

Further information on PROFINET and PROFIBUS is available at www.profibus.com

© Siemens AG 2017

Overview

PROFIBUS – the proven, rugged bus system for automation engineering applications

The requirements of users for an open, non-proprietary communication system have resulted in the specification and standardization of the PROFIBUS protocol.

PROFIBUS defines the technical and functional features of a serial fieldbus system, with which the distributed field automation devices in the lower area (sensor/actuator level) can be networked up to the mid performance range (cell level).

Standardization according to IEC 61158/EN 50170 secures your investments for the future.

Using the conformity and interoperability test performed by the test laboratories authorized by PROFIBUS & PROFINET International (PI) and the certification of the devices by PI, users have the security of knowing that the quality and functionality is guaranteed, even in multi-vendor installations.

PROFIBUS versions

Two different PROFIBUS versions have been defined in order to comply with the widely varying requirements at field level:

- PROFIBUS PA (Process Automation) – the version for applications in process automation. PROFIBUS PA uses the intrinsically safe transmission technology specified in IEC 61158-2.
- PROFIBUS DP (Distributed Periphery) – this version, which is optimized for speed, is specifically tailored to the communication of automation systems with distributed I/O stations and drives. PROFIBUS DP sets itself apart as a result of very short response times and high noise immunity, and replaces cost-intensive, parallel signal transfer with 24 V and measured value transfer utilizing 0/4 … 20 mA technology.

Design

Bus participants on PROFIBUS DP

PROFIBUS DP makes a distinction between two different master classes and one slave class:

DP master class 1

For PROFIBUS DP, DP master class 1 is the central component. In a defined and continually repeating message cycle the central master station exchanges information with distributed stations (DP slaves).

DP master class 2

Devices of this type (programming, configuring or operator control devices) are used during commissioning, for configuring the DP system, for diagnostics or for operating the active plant or system. A DP master class 2 can, for example, read input, output, diagnostic and configuration data of the slaves.

DP slave

A DP slave is an I/O device which receives output information or setpoints from the DP master, and as response, returns input information, measured values and actual values to the DP master. A DP slave never sends data automatically, but only when requested by the DP master.

The quantity of input and output information depends on the device, and for each DP slave in each send direction can be a maximum of 244 bytes.

Function

Functional scope in DP masters and DP slaves

The functional scope can differ between DP masters and DP slaves. The functional scope is different for DP-V0, DP-V1 and DP-V2.

DP-V0 communication functions

The DP-V0 master functions comprise the functions "Configuration", "Parameter Assignment", "Read Diagnostics Data" as well as cyclic reading of input data/actual values and writing output data/setpoints.

DP-V1 communication functions

The DP-V1 function expansions make it possible to perform acyclic read and write functions as well as processing cyclic data communication. This type of slave must be supplied with extensive parameterization data during start-up and during normal operation. These acyclically transferred parameterization data are only rarely changed in comparison to the cyclic setpoints, actual values, and measured values, and are transferred at lower priority in parallel with the cyclic high-speed user data transfer. Detailed diagnostic information can be transferred in the same way.

DP-V2 communication functions

The extended DP-V2 master functions mainly comprise functions for isochronous operation and direct data exchange between DP slaves.

- Isochronous mode:
  Isochronous mode is implemented by means of an equidistant clock signal in the bus system. This cyclic, equidistant cycle is sent by the DP master to all bus nodes in the form of a Global Control Telegram. Master and slaves can then synchronize their applications with this signal. The signal jitter between cycles is less than 1 µs.
- Slave-to-slave communication:
  The "publisher/subscriber" model is used to implement slave-to-slave communication. Slaves declared as publishers make their input data/actual values and measured values available to other slaves, the subscribers, for reading. This is performed by sending the response frame to the master as a broadcast. Slave-to-slave communication is therefore a cyclic process.

Integration

PROFIBUS with SINAMICS

SINAMICS uses the PROFIBUS DP protocol. SINAMICS drives can only be used as DP slaves.

© Siemens AG 2017

Overview

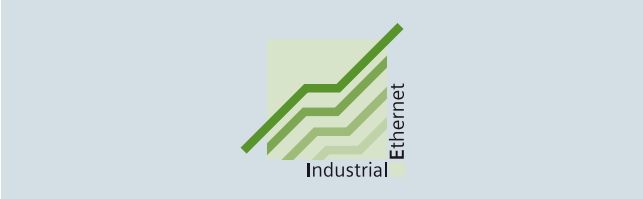

Ethernet is the basic Internet technology for worldwide networking. The wide variety of options of Intranet and Internet, that have long been available in the office environment, are now being made available to factory automation with Industrial Ethernet.

Apart from the use of information technology, the deployment of distributed automation systems is also on the increase. This means the breakdown of complex control tasks into smaller, manageable and drive-based control systems. This in turn is boosting the demand for communication which necessitates an extensive and powerful communication system.

Industrial Ethernet provides a powerful area and cell network for the industrial field, compliant with the IEEE 802.3 (ETHERNET) standard.

Benefits

Ethernet enables a very fast data transfer (10/100 Mbit/s, 1/10 Gbit/s) and at the same time has full-duplex capability. It therefore provides an ideal basis for communication tasks in the industrial field. With a share of over 90%, Ethernet is the number one network worldwide and offers important features which have essential advantages:

- Fast commissioning thanks to extremely simple connection method
- High availability since existing networks can be extended without any adverse effects
- Almost unlimited communication performance because scalable performance is available through switching technology and high data rates when required
- Networking of different application areas such as office and production areas
- Company-wide communication based on wide area network (WAN) technology or the Internet
- Protection of investment due to continuous and compatible development
- Wireless communication using industrial wireless LAN

In order to make Ethernet suitable for industrial applications, considerable expansions with respect to functionality and design are required:

- Network components for use in harsh industrial environments
- Fast assembly of the RJ45 connectors
- Fail-safety through redundancy
- Expanded diagnostics and message concept
- Use of future-oriented network components (e.g. switches)

SIMATIC NET offers corresponding network components and products.

Integration

Industrial Ethernet with SINAMICS S

SINAMICS S provides Control Units and Communication Boards with PROFINET interface based on 100 Mbit/s Ethernet. This means that process communication in real-time, as well as engineering and HMI via standard TCP/IP are simultaneously possible.

It is also possible to access the Web server integrated in SINAMICS at the same time that process communication is in progress.

The CU310-2 and CU320-2 Control Units have an additional Ethernet interface at the front so that service and engineering tasks can be performed very easily.

Communication with SINAMICS S over Industrial Ethernet

PG/PC/HMI communication

PG/PC/HMI communication is performed using protocols which are based on the basic TCP/IP protocol.

- Engineering and diagnostics with STARTER

IT communication

IT communication is performed using protocols which are based on the basic TCP/IP protocol. The most important IT protocols are:

- HTTP/HTTPS: Hypertext Transfer Protocol (Secure)
  Using a standard Internet browser, it is possible to retrieve predefined Web pages containing diagnostic information from the device. Furthermore, user-defined web pages containing information defined by the user can be stored in the device.
- SNMP: Simple Network Management Protocol

© Siemens AG 2017

EtherNet/IP

Overview

Ethernet Industrial Protocol (EtherNet/IP) is an open standard for industrial networks. EtherNet/IP is used to transmit cyclic I/O data and acyclic parameter data. EtherNet/IP was developed by the ODVA (Open DeviceNet Vendor Association), and belongs to the international standard series IEC 61158.

Modbus TCP

Overview

The Ethernet protocol Modbus TCP is an open standard for industrial networks. Modbus TCP is used to transmit acyclic register data. Modbus TCP has been standardized in the international series of standards IEC 61158 since 2007.

CANopen

Overview

CANopen is a communication protocol based on CAN physical characteristics, which is predominantly used in the automation industry and for networking within complex devices. Originally conceived as a fieldbus for networking devices in motion control applications such as handling systems, CANopen has since established itself in the field of medical engineering, vehicle automation, rail and ship networking as well as building automation. Interoperability of CANopen is ensured through the use of application and device profiles, whereby the wide range of options offered by the bus specification enables an appropriate, precise selection to be made for the application or device in question. Furthermore, inverters with CANopen support the "CiA 402 Electrical Drives" device profile.

USS

Overview

As a simple fieldbus protocol, USS (**U**niversal **S**erial **I**nterface protocol of Siemens AG, 1992) can be used both cyclically and acyclically. Based on RS485 physical bus characteristics, up to 32 nodes can be networked to one bus segment and connected to a higher-level controller. This protocol is generally used when there are limited demands on data throughput.

© Siemens AG 2017

Technology functions

6

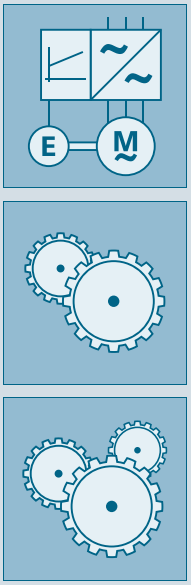

6/2 Basic positioner EPos
6/2 Function module basic positioner (EPos)
6/3 Functionality of the EPos basic positioner

6/4 SINAMICS Technology Extensions (SINAMICS TEC)

Further information about SINAMICS Technology Extensions can be found on the Internet at: www.siemens.com/sinamics-firmware

© Siemens AG 2017

Overview

Function module basic positioner (EPos)

The basic positioner EPos is available as a standard technology function on all SINAMICS S120 Control Units and can be called as a function module that can be activated additionally. The basic positioner can be used to resolve basic motion control tasks without additional external technological outlay from the drive itself.

Integrated functionality for absolute and relative positioning of linear and rotary axes with motor encoders or machine encoders.

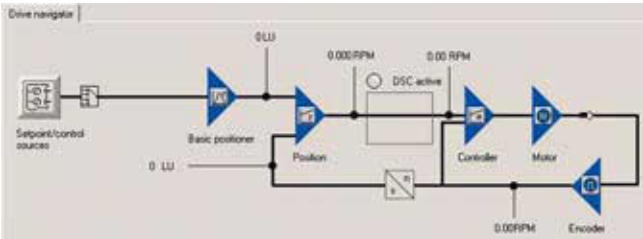

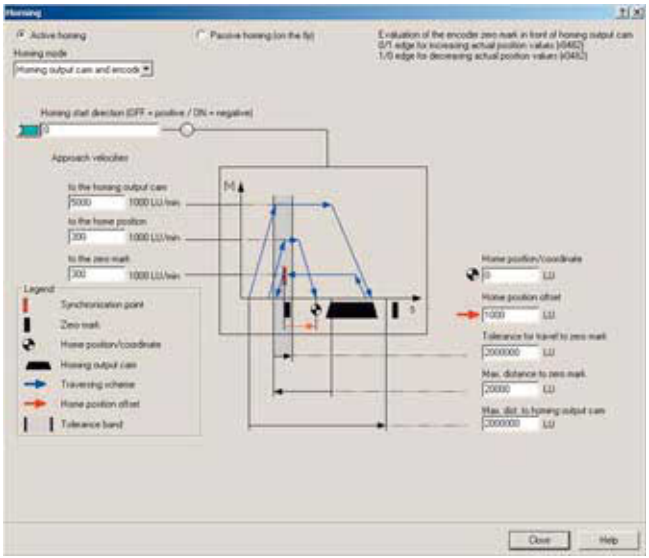

The basic positioner Epos in the SINAMICS S120 drive system provides powerful and precise positioning functions. Due to its flexibility and adaptability, the basic positioner can be used for a wide range of positioning tasks.

The functions are easy to handle both during commissioning and during operation, and the comprehensive monitoring functions are outstanding.

Many applications can be carried out without external position controllers.

The EPos basic positioner is used to position linear and rotary axes (modulo) in absolute/relative terms with rotary as well as linear motor encoder or machine encoder (indirect or direct measuring system).

EPos is a function module that can be activated additionally in Servo Control and in Vector Control.

User-friendly configuring and commissioning including control panel (operation using PC) and diagnostics with the STARTER commissioning tool.

In addition to extremely flexible positioning functions, EPos offers a high degree of user-friendliness and reliability thanks to integral monitoring and compensation functions.

Different operating modes and their functionality increase flexibility and plant productivity, for example, by means of "on-the-fly" and bumpless correction of the motion control.

Preconfigured PROFIdrive positioning frames are available which, when selected, automatically establish the internal "connection" to the basic positioner.

© Siemens AG 2017

Overview (continued)

Functionality of the EPos basic positioner

Lower-level closed-loop position control with the following essential components

- Position actual value sensing (including the lower-level measuring probe evaluation and reference mark search)
- Position controller (including limits, adaptation and pre-control calculation)
- Monitoring functions (standstill, positioning and dynamic following error monitoring, cam signals)

Mechanical system

- Backlash compensation
- Modulo offset

Limitations

- Speed/acceleration/delay/jerk limitation
- Software limit switches (traversing range limitation by means of position setpoint evaluation)
- Stop cams (traversing range limitation using hardware limit switch evaluation)

Referencing or adjustment

- Set reference point (for an axis at standstill)
- Search for reference (separate mode including reversing cam functionality, automatic reversal of direction, homing to "output cam and encoder zero mark" or only "encoder zero mark" or "external zero mark (BERO)")
- Flying referencing (seamless referencing possible during "normal" traversing with the aid of the measuring input evaluation; generally evaluation, e.g. of a BERO. Subordinate function for the modes "jog", "direct setpoint input/MDI" and "traversing blocks")
- Absolute encoder alignment

Traversing blocks mode (64 traversing blocks)

- Positioning using traversing blocks that can be stored in the drive unit including block change enable conditions and specific tasks for an axis that was previously referenced
- Configuring traversing blocks using the traversing block editor in the commissioning tool of the SINAMICS drive family
- A traversing block contains the following information:
  - Job number and job (e.g. positioning, waiting, GOTO block jump, setting of binary outputs, travel to fixed endstop)
  - Motion parameters (target position, velocity, override for acceleration and deceleration)
  - Mode (e.g.: hide block, continuation conditions such as "Continue_with_stop", "Continue_flying" and "Continue_externally using high-speed probe inputs")
  - Job parameters (e.g. wait time, block step conditions)

Direct setpoint input (MDI) mode

- Positioning (absolute, relative) and setting-up (endless closed-loop position control) using direct setpoint inputs (e.g. via the PLC using process data)
- It is always possible to influence the motion parameters during traversing (on-the-fly setpoint acceptance) as well as for on-the-fly changes between the setup and positioning modes.
- The direct setpoint specification operating mode (MDI) can also be used in the relative positioning or setup mode if the axis is not referenced. This means that on-the-fly synchronization and re-referencing can be carried out using "flying referencing".

Jog mode

- Closed-loop position controlled traversing of the axis with "endless position controlled" or "jog incremental" modes (traverse through a "step width"), which can be toggled between

© Siemens AG 2017

SINAMICS Technology Extensions (SINAMICS TEC)

Overview

The SINAMICS Technology Extensions are configurable functions or Siemens technologies that can be added onto firmware functions. The extensions are designed to allow implementation of highly complex, targeted application-specific tasks for various sectors such as test bays, storage and retrieval machines, transportation systems based on linear motors or multi-winding motors in machine manufacture.

The SINAMICS Technology Extensions are part of the Advanced Technology Function and are added to the existing firmware as self-contained software packages. They are easy to install using the STARTER commissioning tool and expand the existing device functionality by the application-specific functions contained in the software. The software is parameterized and diagnosed using STARTER.

Installing these extended functions customizes the functionality of the SINAMICS S120 inverter so that it meets the specific requirements of the user.

SINAMICS Technology Extensions can be used for the following drive systems (the way in which they are used depends on the individual Technology Extension):

- SINAMICS G130
- SINAMICS G150
- SINAMICS S120
- SINAMICS S150
- SINAMICS DCM
- SINAMICS DCP
- SINAMICS GM150
- SINAMICS SM150
- SINAMICS SM120CM
- SINAMICS GL150
- SINAMICS SL150
- SINAMICS GH150
- SIMOTION D (SINAMICS Integrated)
- SINUMERIK 840D sl (SINAMICS Integrated)

The following SINAMICS Technology Extensions are available for downloading from the Siemens Industry Online Support website
https://support.industry.siemens.com
Simply enter your Article No. in “Searching for product information”.

Signal generator for test bays with SINAMICS Technology Extension POLYGON

The Technology Extension POLYGON (Polygonal Line) is an extension of the SINAMICS drive objects SERVO, VECTOR and HLA.
The polygonal line application makes it possible to create a master-value-dependent output signal based on a parameterized characteristic in the current controller sampling time (or an integer multiple of the current controller sampling time). The characteristic is defined by up to 10000 equidistantly distributed interpolation points between which linear interpolation is performed. The y values of the interpolation points can be taken from an Excel sheet using a script. By interconnecting the output signals to different connector inputs, it is possible to create various relationships via the characteristic functionality, e.g.:

- Position-position reference
- Position-speed reference
- Position-torque reference

Vibration extinction for storage and retrieval machines with SINAMICS Technology Extension VIBX

The Technology Extension VIBX (Vibration Extinction) is an extension of the SINAMICS drive objects SERVO and VECTOR. A setpoint filter is implemented in VIBX. The objective of the setpoint filter is to change the setpoint of an axis so that there is as little vibration as possible caused in the natural frequency range of the moving mechanical components. This function is primarily deployed on storage and retrieval machines to significantly reduce mast vibrations caused by acceleration and braking. It has been demonstrated that reducing vibrations will allow the mast to come to a standstill more quickly, thus enabling it to handle goods faster.
The SINAMICS Technology Extension Vibration Extinction implemented as setpoint filter can be used both in basic positioners (EPos) and Dynamic Servo Controls (DSC) together with a controller in the drive. For this purpose, two modes of application are supported by the Technology Extension:

- EPos and LR application mode
- DSC application mode

The filter characteristics can be set using frequency and damping (attenuation). The filter frequency can be linearly changed between two limit values via an input during operation. This means that the filter frequency can be tracked to follow the changing natural frequency of a mechanical system (e.g. as a result of different load states) (online frequency change).

Point-to-point connection between two CUs with SINAMICS Technology Extension OALINK

The Technology Extension OALINK (Open Application Link) is a SINAMICS extension for the CU320-2 Control Unit.
The OALINK enables bidirectional communication between two Control Units based on DRIVE-CLiQ to facilitate the simple exchange of data. In this way, an additional Control Unit can be integrated as a technology extension for extensive drive-based technology with SINAMICS Drive Control Chart (DCC).

Selection and ordering data

Description	Article No.
SINAMICS Technology Extension POLYGON Runtime license per performance unit (of a Control Unit) in hardcopy form Software can be downloaded free of charge from the Siemens Industry Online Support website and can be used with SINAMICS firmware as of V4.5.	**6SL3077-0AA00-7AB0**
SINAMICS Technology Extension VIBX Runtime license per performance unit (of a Control Unit) in hardcopy form Software can be downloaded free of charge from the Siemens Industry Online Support website and can be used with SINAMICS firmware as of V4.3.	**6SL3077-0AA00-5AB0**
SINAMICS Technology Extension OALINK Runtime license per performance unit (of a Control Unit) in hardcopy form Software can be downloaded free of charge from the Siemens Industry Online Support website and can be used with SINAMICS firmware as of V4.6.	**6SL3077-0AA01-0AB0**

More information

Further SINAMICS Technology Extensions are available for the following applications:

- Signal generator or operating profiles for test bays with Technology Extension **SETPGEN**
- Coupling of SERVO Motor Modules with Technology Extension **SERVCOUP**
- Coupling of linear motors for transportation systems with Technology Extension **RAILCTRL**

More information about SINAMICS Technology Extensions is available online at
www.siemens.com/sinamics-firmware
(Section Advanced Technology Functions)

© Siemens AG 2017

7/2 **System overview**

7/7 **System data**

7/8 **Control Units**
7/11 CU310-2 Control Units for single-axis drives
7/15 CU320-2 Control Units
7/19 BOP20 Basic Operator Panel
7/20 CUA31 Control Unit Adapter
7/22 CUA32 Control Unit Adapter
7/24 CBE20 Communication Board
7/25 CBC10 Communication Board
7/26 TB30 Terminal Board

7/28 **Booksize format**
7/28 General technical specifications
Active Line Modules and components
7/30 Active Line Modules
7/35 Active Interface Modules
7/39 Basic Line Filters for Active Line Modules
7/40 Recommended line-side components
Smart Line Modules and components
7/41 Smart Line Module Compact
7/45 Smart Line Modules
7/51 Line reactors for Smart Line Modules
7/52 Line filters for Smart Line Modules
7/53 Recommended line-side components
Basic Line Modules and components
7/54 Basic Line Modules
7/61 Line reactors for Basic Line Modules
7/62 Line filters for Basic Line Modules
7/63 Recommended line-side components
Motor Modules
7/64 Single Motor Modules Compact
7/70 Single Motor Modules
7/80 Double Motor Modules Compact
7/86 Double Motor Modules
DC link components
7/93 Braking Module Compact
7/95 Braking Module
7/97 Braking resistors
7/99 Capacitor Module
7/100 Control Supply Module
7/102 DC link adapters
Motor-side power components
7/103 Motor reactors
7/105 SINAMICS S120M distributed servo drive

Chap. 13 **Drive Technology Configurator**
SIZER for Siemens Drives
CAD CREATOR
STARTER

7/111 **Chassis format**
7/115 Air-cooled units
7/120 Power Modules
7/124 Active Line Modules
7/129 Active Interface Modules
7/135 Smart Line Modules
7/140 Basic Line Modules
7/145 Motor Modules
7/162 Mounting device
7/163 Liquid-cooled units
7/171 Power Modules
7/175 Active Line Modules
7/179 Active Interface Modules
7/183 Basic Line Modules
7/187 Motor Modules
7/197 Line-side power components
7/198 Line filters
7/202 Line reactors
7/206 Recommended line-side components
7/212 DC link components
7/212 Braking Modules
7/216 Braking resistors
7/218 DC link fuses
7/220 Motor-side power components
7/220 Motor reactors
7/224 dv/dt filters plus VPL
7/229 dv/dt filters compact plus VPL
7/234 Sine-wave filters
7/236 Safe Brake Adapter SBA

7/238 **Blocksize format**
7/238 Air-cooled Power Modules
7/260 Line filters
7/262 Line reactors
7/265 Recommended line-side components
7/267 Braking resistors
7/273 Output reactors
7/277 Push-through mounting frame
7/278 Safe Brake Relay

7/279 **Supplementary system components**
7/279 DMC20 DRIVE-CLiQ Hub Module
7/280 DME20 DRIVE-CLiQ Hub Module
7/282 TM15 Terminal Module
7/284 TM31 Terminal Module
7/287 TM41 Terminal Module
7/290 TM54F Terminal Module
7/293 TM120 Terminal Module
7/295 TM150 Terminal Module
7/297 VSM10 Voltage Sensing Module
7/299 Encoder system connection
7/300 SMC10 Sensor Module Cabinet-Mounted
7/301 SMC20 Sensor Module Cabinet-Mounted
7/302 SMC30 Sensor Module Cabinet-Mounted
7/303 SME20/SME25 Sensor Modules External
7/305 SME120/SME125 Sensor Modules External

© Siemens AG 2017

Overview

With its separate power unit and Control Unit, the SINAMICS S120 drive system can be perfectly adapted to a wide variety of different drive tasks.

The Control Unit is selected according to the number of drives to be controlled and the required performance level, while the power unit must be rated to meet the energy requirements of the system. The connection between the Control Unit and power unit is made very simply using the digital system interface DRIVE-CLiQ.

Control Units

CU310-2 PN Control Unit

CU320-2 PN Control Unit

CU310-2 DP and CU310-2 PN Control Units

The CU310-2 Control Unit is used to control a single drive. A PROFIBUS interface (CU310-2 DP) or a PROFINET interface (CU310-2 PN) and a TTL/HTL encoder evaluation circuit are standard features.

CU320-2 Control Unit

The CU320-2 Control Unit is designed to control several drives. In this case, the following can be operated on a CU320-2 Control Unit:

- up to 12 drives in V/f control mode, or
- up to 6 drives in Servo or Vector control mode.

The CU320-2 Control Unit can be used to establish links between individual drives and to implement simple technological functions.

Power Modules

The simplest version of a SINAMICS S120 drive system comprises a CU310-2 Control Unit and a Power Module. A line rectifier, a DC link and an inverter for supplying a motor are integrated in the Power Module.

Power Module in blocksize format with CU310-2 Control Unit and BOP20 Basic Operator Panel

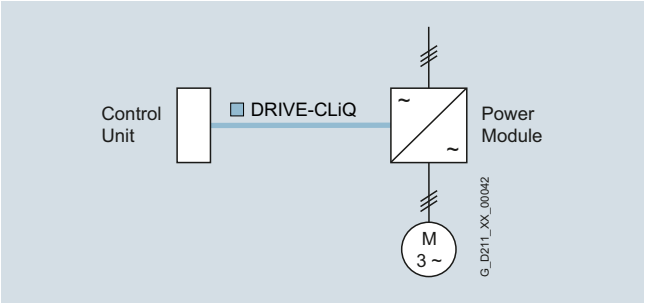

Power Modules are designed for single drives which are not capable of regenerating energy to the supply. Generated energy produced during braking is converted to heat via braking resistors.

Power Modules can also be operated via a CU320-2 Control Unit, a SIMOTION D4x5-2 or a CX32-2 Controller Extension, for example, if a single drive is added to a multi-axis grouping. In this case, the Power Modules in blocksize format must be equipped with the CUA31/CUA32 Control Unit Adapter. This is connected via DRIVE-CLiQ to the CU320-2 Control Unit, the SIMOTION D4x5-2 or the CX32-2 Controller Extension. Power Modules in chassis format can be directly connected to the Control Unit using a DRIVE-CLiQ cable.

© Siemens AG 2017

Overview (continued)

Motor Modules

A DC link and an inverter for supplying a motor are integrated in the Motor Module.

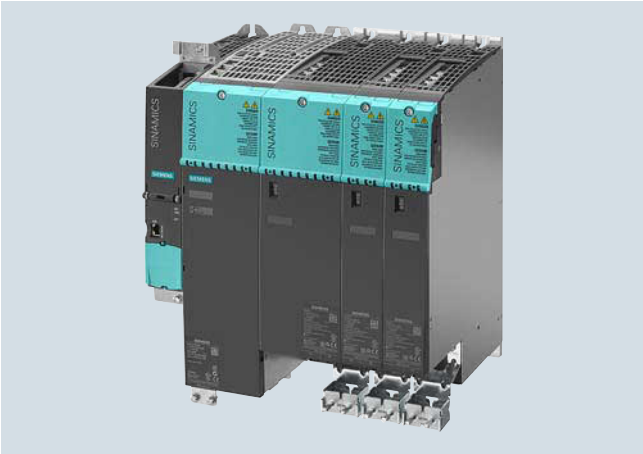

CU320-2 Control Unit, Line Module and three Motor Modules in booksize format

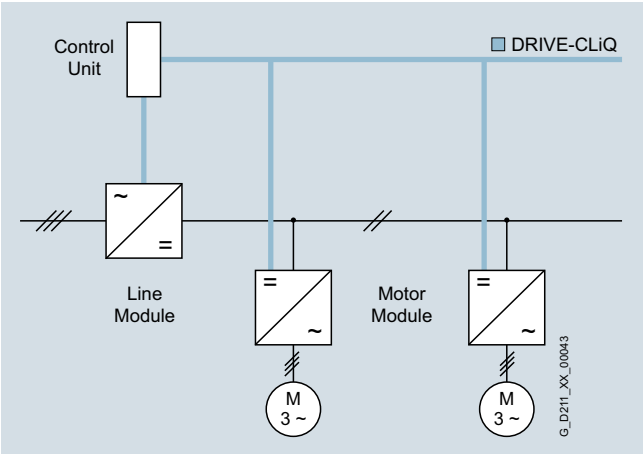

Motor Modules have been designed for multi-axis drives. Motor Modules are interconnected by means of a shared DC busbar. Since the Motor Modules share the same DC link, they can exchange energy with one another, i.e. if one Motor Module operating in the generator mode produces energy, the energy can be used by another Motor Module operating in the motor mode. The voltage-source DC link is supplied with mains voltage by a Line Module.

Line Modules

Line Modules generate a DC voltage from the line voltage and supply Motor Modules with energy via the voltage-source DC link.

Basic Line Modules

Basic Line Modules are designed only for infeed operation, i.e. they are not capable of recovering energy to the line supply. If regenerative energy is produced, e.g. when drives brake, it must be converted to heat by means of a Braking Module and a braking resistor. When a Basic Line Module is used as the infeed, the matching line reactor must be installed. A line filter can be optionally installed in order to ensure compliance with the limits stipulated for Category C2 in EN 61800-3.

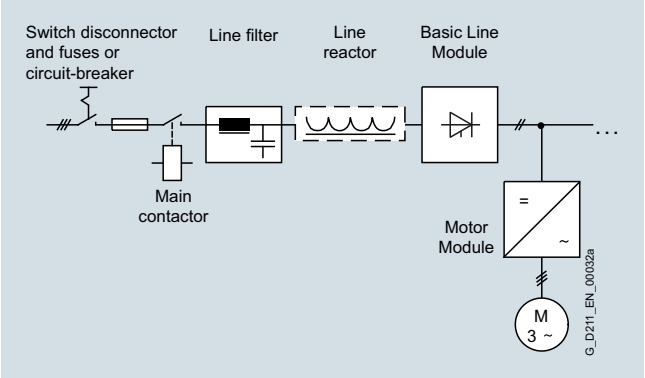

Smart Line Modules

Smart Line Modules can supply energy and return regenerative energy to the supply system. A Braking Module and braking resistor are required only if the drives need to be decelerated in a controlled manner after a power failure (i.e. when energy cannot be recovered to the supply). When a Smart Line Module is used as the infeed, the matching line reactor must be installed. A line filter can be optionally installed in order to ensure compliance with the limits stipulated for Category C2 in EN 61800-3.

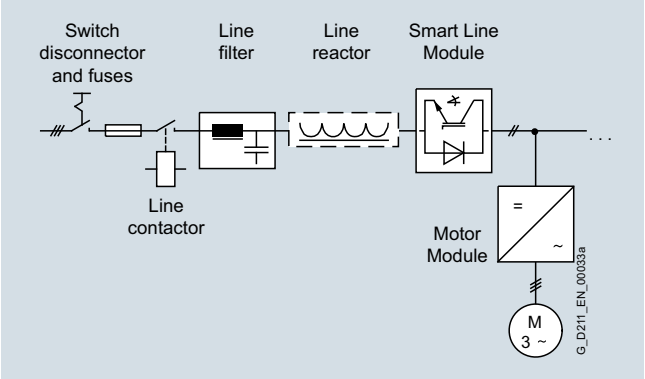

© Siemens AG 2017

Overview (continued)

Active Line Modules

Active Line Modules can supply energy and return regenerative energy to the supply system. A Braking Module and braking resistor are required only if the drives need to be decelerated in a controlled manner after a power failure (i.e. when energy cannot be recovered to the supply). In contrast to Basic Line Modules and Smart Line Modules, however, Active Line Modules generate a regulated DC voltage which remains constant despite fluctuations in the line voltage. In this case, the line voltage must remain within the permissible tolerance range. Active Line Modules draw a virtually sinusoidal current from the supply which limits any harmful harmonics.

In order to operate an Active Line Module, an Active Interface Module with the appropriate rating must be used. A line filter can be optionally installed in order to ensure compliance with the limits stipulated for Category C2 in EN 61800-3.

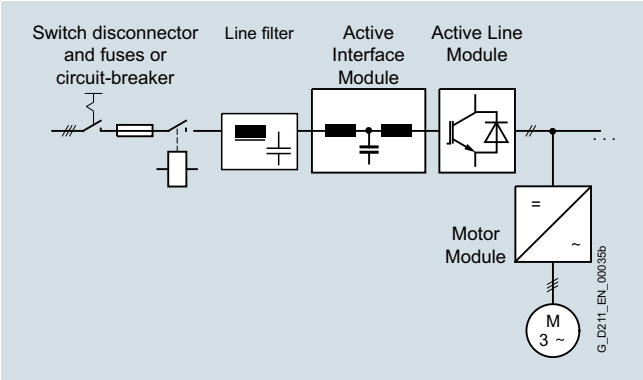

For further information about configuring a drive system with SINAMICS S120, refer to section configuration notes.

Power Modules, Motor Modules and Line Modules are available in booksize, booksize compact, blocksize and chassis format:

- Power Modules in blocksize and chassis formats,
- Motor Modules and Line Modules in booksize, booksize compact and chassis formats.

Cooling methods

There are two cooling options available depending on the type of construction:

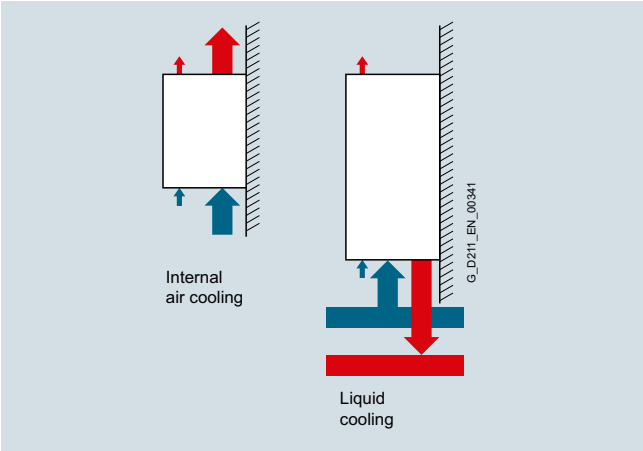

Internal air cooling

In this standard solution, the power loss from the electronics and power units of the drive components is removed by natural cooling or by a forced-ventilation system and routed to the interior of the control cabinet.

Liquid cooling

For liquid-cooled devices in chassis format, the power semiconductors are mounted on a heat sink through which the cooling medium flows. Most of the heat produced by the unit is absorbed by the cooling medium and can be dissipated outside the control cabinet.

Customized application

The devices can be purchased in the different formats as a complete system solution. Users profit from the know-how of the drive experts and need not spend valuable time calculating the thermal design requirements of the application. Especially in applications involving devices with liquid cooling in chassis format, users are provided with a technically sound solution and can reduce their engineering costs. The system solution extends up to complete control cabinets with cooling system and temperature/condensation control.

Further information is available on request.

Energy efficiency

The SINAMICS S120 drive system saves energy by recovering energy from the axes and using it within the DC link group of a multi-axis configuration and by feeding it back into the supply system. Even at full infeed capacity, no unnecessary heat is generated in the control cabinet. Because the Active Line Modules prevent capacitive and inductive reactive currents, SINAMICS S120 also ensures that no unnecessary power losses occur in the power supply and that no current harmonics occur. This not only prevents detrimental effects on other loads, but it also reduces the heat generated in the control cabinet.

System components

System components are divided into the following categories:

- **DC link components**
  e.g. Braking Modules and braking resistors
- **Output-end power components**
  e.g. motor reactors
- **Supplementary system components**
  e.g. Terminal Modules, Operator Panel and Communication Boards
- **Encoder system interface**
  for connecting various encoder types to SINAMICS S120

© Siemens AG 2017

Overview (continued)

Booksize format

Booksize format units are optimized for multi-axis applications and are mounted adjacent to one another. The connection for the common DC link is an integral feature. The units are cooled by an internal air cooling circuit.

Booksize compact format

Derived from the booksize format we developed the booksize compact format for machines with particularly high requirements for the compactness of their drives. The booksize compact format offers most features of the booksize format, but with a reduced overall height. The units are cooled by an internal air cooling circuit.

Blocksize format

Blocksize format units are optimized for single-axis applications and are available only as Power Modules.

The CU310-2 can be directly snap-mounted. The units are cooled by an internal air cooling circuit.

With the push-through versions, the Power Module cooling fins extend through the rear panel of the control cabinet, thus facilitating cooling. Push-through versions should be used in applications where the amount of power loss generated inside the control cabinet itself must be minimized.

Chassis format

Higher-output units (approximately 100 kW and above) are constructed in chassis format. These are available as Line Modules, Power Modules and Motor Modules. Chassis format units are cooled by an internal air cooling circuit. Liquid-cooled devices can be ordered for special applications such as extrusion processes or marine engineering. The CU310-2 Control Unit can be integrated in the Power Modules.

Additional information on liquid-cooled converters is provided in Catalog D 21.3.

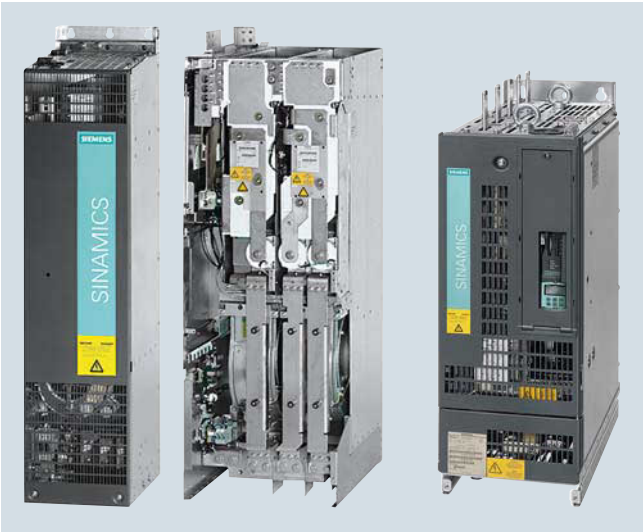

© Siemens AG 2017

Overview (continued)

Cabinet Modules

In addition to the converter chassis units listed in this catalog, SINAMICS S120 Cabinet Modules are available which are a modular cabinet system for multi-motor drives with a central supply infeed and a common DC busbar, for example, as used in paper machines, rolling mills, test bays, and hoisting gear. Cabinet Modules are available with a total power rating of up to 4500 kW in the air-cooled version and up to 5700 kW in the liquid-cooled version.

The main components of the system are as follows:

- Line Connection Modules
- Basic Line Modules
- Smart Line Modules
- Active Line Modules including Active Interface Modules
- Central Braking Modules
- Motor Modules
- Auxiliary Power Supply Modules

For additional information see Catalog D 21.3.

© Siemens AG 2017

Technical specifications

The most important directives and standards are listed below. These are used as the basis for the SINAMICS S120 built-in units and they must be carefully observed to achieve an EMC-compliant configuration that is safe both functionally and in operation.

European standards	
EN 61508-1	Functional safety of electrical/electronic/ programmable electronic safety-related systems Part 1: General requirements
EN 60204-1	Electrical equipment of machines Part 1: General definitions
EN 61800-3	Adjustable speed electrical power drive systems Part 3: EMC product standard including specific test methods
IEC/EN 61800-5-1	Adjustable-speed electrical power drive systems Part 5: Safety requirements Main section 1: Electrical and thermal requirements
North American standards	
UL 508C	Power Conversion Equipment
UL 61800-5-1	Adjustable Speed Electrical Power Drive Systems
CSA C22.2 No. 14	Industrial Control Equipment
Certificates of suitability	
cULus	Testing by UL (Underwriters Laboratories, www.ul.com) according to UL and CSA standards

More information

For reliable operation of the drive system, original components of the SINAMICS drive system and the original Siemens accessories as described in this Catalog and the Configuration Manuals, in the functional descriptions or user manuals must be used.

The user must observe the configuring instructions.

Combinations that differ from the configuring instructions (also in conjunction with non-Siemens products) require a special agreement.

If no original components are used, for example, for repairs, approvals such as UL, EN and Safety Integrated can become invalid. This may also result in the operating authorization for the machine in which the non-Siemens components are installed becoming invalid.

All of the certificates of suitability, approvals, certificates, declarations of conformity, test certificates, e.g. CE, UL, Safety Integrated, have been performed with the associated system components as they are described in the Catalogs and Configuration Manuals. The certificates are only valid if the products are used with the described system components, are installed according to the Installation Guidelines and are used for their intended purpose. In other cases, the vendor of these products is responsible for arranging that new certificates are issued.

Notes to engineer a drive system with SINAMICS S120 are provided in section configuration notes.

© Siemens AG 2017

Overview

System architecture with a central Control Unit

Electronically coordinated individual drives work together to perform your drive tasks. Higher-level controllers operate the drives to achieve the required coordinated movement. This requires cyclic data exchange between the controller and the drives. This exchange usually took place via a field bus, which required a great deal of time and effort for installation and configuration. SINAMICS S120 takes a different approach: A central Control Unit controls the drives for all connected axes and also establishes the technological links between the drives and/or axes. Since all the required data is stored in the central Control Unit, it does not need to be transferred. Inter-axis connections can be established within a Control Unit and easily configured in the STARTER commissioning tool using a mouse.

- Simple technological tasks can be carried out automatically by the SINAMICS S120 Control Unit
- The **CU310-2 DP** or **CU310-2 PN** Control Unit is available for single drives.
- The **CU320-2 DP** or **CU320-2 PN** Control Unit is suitable for multi-axis applications
- Sophisticated Motion Control tasks can be implemented with the support of the more powerful **D410-2, D425-2, D435-2, D445-2** and **D455-2** Control Units of SIMOTION D (graded according to performance)

You can obtain further information about SIMOTION in the Industry Mall and Catalog PM 21.

Each of these Control Units is based on an object-oriented SINAMICS S120 standard firmware that contains all of the most popular control modes and can be scaled to meet even the highest performance requirements.

The drive controls are supplied as ready-to-configure drive objects:

- Infeed Control for line infeed
- Vector Control
  - Variable-speed drives with high speed and torque stability in general machine and plant construction
  - Particularly suitable for induction motors
  - Optimized pulse patterns for efficient motor/converter systems
- Servo Control
  - Drives with highly dynamic motion control
  - Angular synchronism with isochronous PROFIBUS/PROFINET
  - For use in machine tools and clocked production machines

The most commonly used v/f control modes are stored in the "Vector control" drive object and are ideal for implementing even simple applications such as group drives with SIEMOSYN motors.

CompactFlash card

The functions of the SINAMICS S120 drives are stored on a CompactFlash card. This card contains the firmware and parameter settings for all drives in the form of a project. The CompactFlash card can also hold additional projects, which means that the correct project can be accessed immediately when series machines of different types are commissioned. When the Control Unit has booted, the data on the CompactFlash card is read and loaded to the RAM.

The firmware is organized in objects. Drive objects are used to implement open-loop and closed-loop control functions for Line Modules, Motor Modules, Power Modules and other system components connected by DRIVE-CLiQ.

Drive objects

A drive object is a self-contained software function with its own parameters and, if necessary, its own fault messages and alarms.

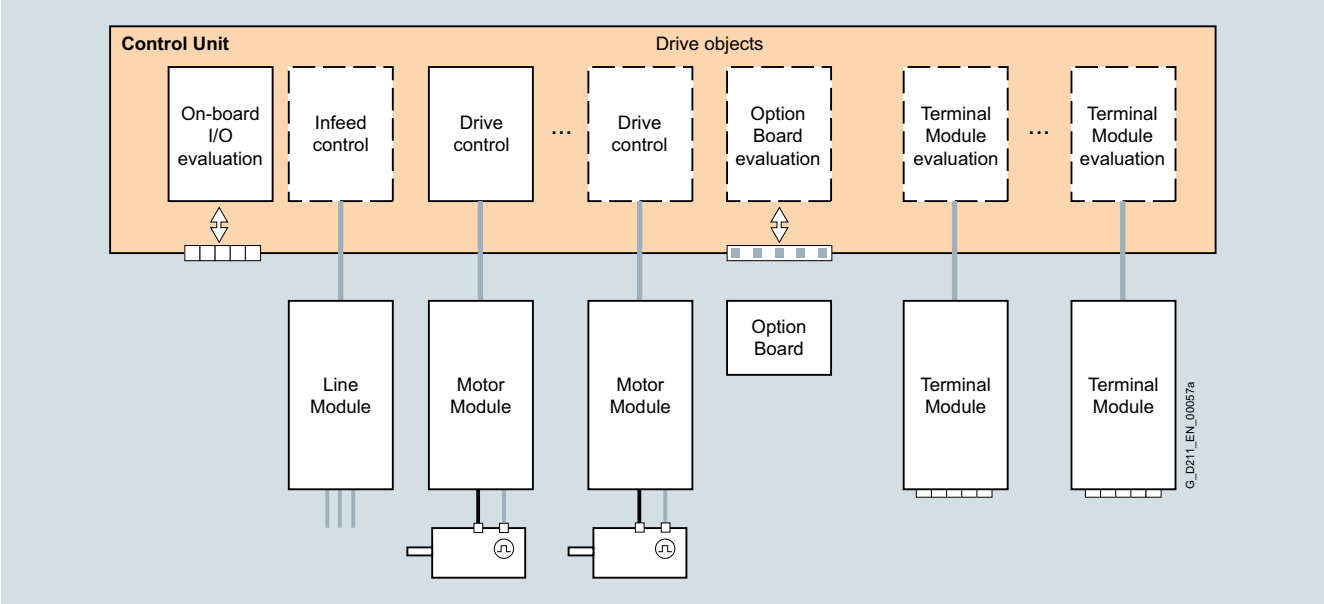

© Siemens AG 2017

Overview (continued)

Extended technology with SIMOTION

SIMOTION D Control Units support the coordinated motion control of multiple drives. Technology objects are implemented in addition to drive objects on these Control Units. These are grouped to form technology packages and make available extended motion control functions (e.g. synchronous operation, cam disk, path interpolation and others) or technological functions (e.g. a cam controller, a temperature or pressure control).

The IEC 61131-3-compliant PLC integrated in SIMOTION D Control Units means that they are not just capable of controlling sequences of motions, but the entire machine including HMI and I/Os.

You can obtain further information about SIMOTION in the Industry Mall and Catalog PM 21.

Comprehensive package of open-loop and closed-loop control functions

A wide variety of standard functions such as setpoint input, data set changeover, controller optimization and kinetic buffering ensure a high degree of functional reliability and excellent flexibility of application.

Overview of key open-loop and closed-loop control functions

	SINAMICS S120 closed-loop control modes	**SINAMICS S120 open-loop control modes**	**Main functions SINAMICS S120 for booksize/chassis**	**Comment, note**
Infeed Control	• Booksize - Current control with/without mains sensor - V_{DC} control without/with mains sensor • Chassis - Current control with mains sensor - V_{DC} control with mains sensor	• Booksize/chassis - Basic Mode Rectification only - Smart Mode Rectification and regenerative feedback	• Mains identification • Controller optimization • Harmonics filter • Automatic restart	The mains sensor is the VSM 10 Voltage Sensing Module; "current" is the line current; 3-phase with line frequency
Vector Control	• Asynchronous (induction) motor - Torque control with/without encoder - Speed control with/without encoder • Torque motor - Torque control with encoder - Speed control with/without encoder • Asynchronous (induction) motor, torque motor - Position control with encoder • Reluctance motor - Torque control with/without encoder - Speed control with/without encoder	• Linear/parabolic characteristic • Fixed-frequency characteristic (textile) • Independent voltage setpoint input	• Data set changeover • Extended setpoint input • Motor identification • Current/speed controller optimization • Technology controller • Basic positioner • Automatic restart • Flying restart with/without encoder • Kinetic buffering • Synchronization • Droop • Brake control	Mixed operation with V/f control modes is possible; it is for this reason that the V/f control modes are stored only once in the "Vector control" drive object. V/f is not possible for reluctance motors. Catalog D 81.1 provides additional information about reluctance motors. Position control can be selected as a function module from both the servo and vector modes. Synchronous motors (1FK and 1FT) and linear motors can be operated only in Servo mode.
Servo Control	• Asynchronous induction motor - Torque control with encoder - Speed control with/without encoder • Synchronous motor, linear motor and torque motor - Torque control with encoder - Speed control with encoder • All motor types - Position control with encoder	• Linear/parabolic characteristic • Fixed-frequency characteristic (textile) • Independent voltage setpoint input	• Data set changeover • Setpoint input • Motor identification • Damping application • Technology controller • Basic positioner • Brake control	Mixed operation with V/f control modes is possible; it is for this reason that the V/f control modes are only saved once in the "Vector control" drive object. Position control can be selected as a function module from both the servo and vector modes.

© Siemens AG 2017

Overview (continued)

BICO technology

Every drive object contains a large number of input and output variables which can be freely and independently interconnected using Binector Connector Technology (BICO). A binector is a logic signal which can assume the value 0 or 1. A connector is a numerical value, e.g. the actual speed or current setpoint.

Basic positioner (EPos)

The EPos basic positioner provides powerful and precise positioning functions. Due to its flexibility and adaptability, the EPos basic positioner can be used for a wide range of positioning tasks. The functions are easy to use during both commissioning and operation, and the comprehensive monitoring functions are very powerful. Many applications can be implemented without external position control systems.

Additional information about the basic positioner (EPos) is provided in section Technology functions.

Technology controller (PID)

The technology controller is designed as a PID controller. It is suitable for implementing controls for regulating variables such as fill level, temperature, tension, pressure, flow rate and dancer position.

Additional information about the technology controller (PID) is provided in section Firmware functionality.

SINAMICS Drive Control Chart (SINAMICS DCC)

SINAMICS DCC expands the scope of device functions by means of freely available closed-loop control, arithmetic and logic blocks and offers a means by which proprietary technological functions can be graphically configured in the SINAMICS drive system. In addition, local data processing in the drive supports the implementation of modular machine concepts and results in an increase in the overall machine performance.

Additional information about the Drive Control Chart (DCC) is provided in section Engineering tools.

SINAMICS Technology Extensions (SINAMICS TEC)

The SINAMICS TEC are configurable functions or Siemens technologies that can be added to extend firmware functions. These extensions are designed to allow implementation of highly complex, application-specific tasks for various sectors - such as storage and retrieval machines.

Additional information about Technology Extensions (TEC) is provided in section Technology functions.

Integral safety functions (Safety Integrated)

The Control Units support comprehensive safety functions.

The integrated safety functions are the
Safety Integrated Basic Functions

- STO = Safe Torque Off
- SBC = Safe Brake Control
- SS1 = Safe Stop 1

And the
Safety Integrated Extended Functions
that require a license

- SS1 with SBR/SAM = Safe Stop 1 with Safe Brake Ramp/ Safe Acceleration Monitor
- SS2 = Safe Stop 2
- SOS = Safe Operating Stop
- SBT = Safe Brake Test
- SLS = Safely Limited Speed
- SSM = Safe Speed Monitor
- SDI = Safe Direction
- SLP = Safely-Limited Position
- SP = Safe Position

(abbreviations in accordance with IEC 61800-5-2)

If the integrated safety functions are used, licenses, supplementary system components such as TM54F terminal modules, or suitable safety controls will be necessary.

Additional information about the integrated safety functions is provided in section Safety Integrated.

Diagnostics optimally supported by trace function

The time characteristics of input and output variables associated with drive objects can be measured by the integrated trace function and displayed using the STARTER commissioning tool. The trace can record up to 4 signals simultaneously. A recording can be triggered dependent on freely selectable boundary conditions, e.g. the value of an input or output variable.

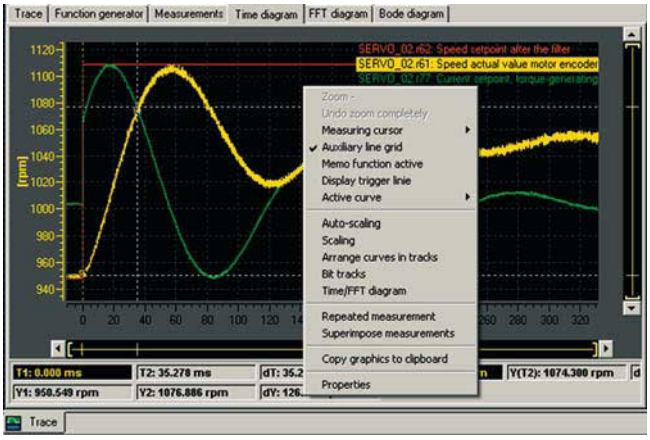

© Siemens AG 2017

Overview

CU310-2 PN and CU310-2 DP Control Units

The CU310-2 Control Unit that is designed for the communication and open-loop/closed-loop control functions of a SINAMICS S120 (AC/AC) is combined with the PM240-2 Power Module (can be used from firmware V4.8) to create a high-performance single-axis drive. A PROFINET (PN) variant and a PROFIBUS (DP) variant are available for fieldbus communication.

CompactFlash card for CU310-2 Control Units

The CompactFlash card contains the firmware and parameter settings. The CompactFlash card is plugged into the appropriate slot on the CU310-2 Control Unit.

A CU310-2 Control Unit can perform the communication, open-loop and closed-loop control functions for one Power Module. The performance expansion is not required in this case.

In addition to the firmware, the CompactFlash Card also contains licensing codes which are required to enable firmware options.

In addition to the Article No., the following firmware options can currently be ordered:

- Safety Integrated Extended Functions, order code **F01**
- High output frequency [1], order code **J01**
- DCB Extension, order code **U01**

After the appropriate license has been purchased via the WEB License Manager available on the Internet, firmware options can also be subsequently enabled.

Further information is available on the Internet at
www.siemens.com/automation/license

Design

The CU310-2 Control Unit has the following connections and interfaces as standard:

- Fieldbus interface
  - CU310-2 PN: 1 PROFINET interface with 2 ports (RJ45 sockets) with PROFIdrive V4 profile
  - CU310-2 DP: 1 PROFIBUS interface with PROFIdrive V4 profile
- 1 DRIVE-CLiQ socket for communication with the DRIVE-CLiQ motor or other DRIVE-CLiQ devices (e.g. Sensor Modules or Terminal Modules)
- 1 encoder evaluation for evaluating the following encoder signals
  - Incremental encoder TTL/HTL
  - SSI encoder without incremental signals
- 1 PE/protective conductor connection
- 1 connection for the electronics power supply via the 24 V DC supply connector
- 1 temperature sensor input for KTY84-130, Pt1000 or PTC (Pt1000 can be used from firmware V4.7 HF17)
- 3 parameterizable, fail-safe (can be used with firmware V4.5 and higher) digital inputs (floating) or alternatively 6 parameterizable digital inputs (floating).
  The fail-safe digital inputs can be routed, i.e. they can be routed via PROFIsafe to a higher-level controller.
- 5 parameterizable digital inputs (floating)
- 1 parameterizable, fail-safe (can be used with firmware V4.5 and higher) digital input (floating) or alternatively 1 digital output (floating) [2]
- 8 parameterizable bidirectional digital inputs/outputs (non-floating) [2]
- 1 analog input, either ± 10 V (resolution 12 bits + sign) or ± 20 mA (11 bits + sign)
- 1 Ethernet interface (RJ45 socket) for commissioning and diagnostics
- 1 slot for the CompactFlash card on which firmware and parameters are stored
- 1 PM-IF interface for communication with the Power Modules in blocksize format
- 3 test sockets and one reference ground for commissioning support
- 1 interface to the BOP20 Basic Operator Panel

The status of the CU310-2 Control Unit is indicated using multi-color LEDs.

A BOP20 Basic Operator Panel can also be snapped directly onto the CU310-2 Control Unit for diagnostics.

As the firmware and parameter settings are stored on a plug-in CompactFlash card, the Control Unit can be changed without the need for software tools.

[1] For further information, see
https://support.industry.siemens.com/cs/document/104020669

[2] A 24 V supply voltage must be connected to terminal X124 for the digital outputs to be used.

© Siemens AG 2017

Selection and ordering data

Description	Article No.
CU310-2 PN Control Unit Without CompactFlash card	**6SL3040-1LA01-0AA0**
CU310-2 DP Control Unit Without CompactFlash card	**6SL3040-1LA00-0AA0**
CompactFlash card for CU310-2 PN and CU310-2 DP Control Units including Certificate of License	**6SL3054-0E ■ 00-1BA0**
• and with safety license	**6SL3054-0E ■ 00-1BA0-Z F01**
• and with high output frequency [1]	**6SL3054-0E ■ 00-1BA0-Z J01**
• and with DCB Extension license (firmware V4.6 and higher) (further information about DCB Extension and license upgrades can be found under Drive Control Chart (DCC) in section Engineering tools)	**6SL3054-0E ■ 00-1BA0-Z U01**
Firmware **V4.7**	**H**
Firmware **V4.8**	**J**
Licensing	
• Safety Integrated Extended Functions Upgrading license on a CompactFlash card	**6SL3074-0AA10-0AA0**
• High output frequency [1] Upgrading license to enable frequencies above 550 Hz on a CompactFlash card	**6SL3074-0AA02-0AA0**
• Cogging torque compensation Option to compensate motor cogging torques at low speeds License is provided on a CompactFlash card	**6SL3074-0AA15-0AA0**
• Advanced Position Control (APC) Option to dampen load oscillations by taking into account motor and load-side state variables License is provided on a CompactFlash card	**6SL3074-0AA05-0AA0**
Accessories	
BOP20 Basic Operator Panel	**6SL3055-0AA00-4BA0**
STARTER commissioning tool [2] On DVD-ROM	**6SL3072-0AA00-0AG0**
Accessories for re-ordering	
Dust protection blanking plugs (50 units) For DRIVE-CLiQ port	**6SL3066-4CA00-0AA0**

Information on connectors and cables is provided in

- section MOTION-CONNECT connection systems
- catalog IK PI
- Siemens Industry Mall: www.siemens.com/industrymall

Integration

The CU310-2 Control Unit drives Power Modules in blocksize format via the PM-IF interface. DRIVE-CLiQ motors or Sensor Modules (SMC) can also be connected to the integrated DRIVE-CLiQ socket to permit the operation of motors without a DRIVE-CLiQ interface.

With the BOP20 Basic Operator Panel, parameters can be changed directly on the device. The BOP20 Basic Operator Panel can also be snapped onto the CU310-2 Control Unit during operation to perform diagnostics.

The CU310-2 Control Unit and other connected components are commissioned and diagnosed with the STARTER commissioning tool. The CU310-2 Control Unit requires a CompactFlash card with firmware V4.4 or higher.

A CU310-2 PN Control Unit communicates with the higher-level control system using PROFINET IO and the PROFIdrive V4 profile.

The SINAMICS S120 drive system with the CU310-2 PN Control Unit then assumes the function of a PROFINET IO device and can perform the following functions:

- PROFINET IO device
- 100 Mbit/s full duplex
- Supports real-time classes of PROFINET IO:
  - RT (Real-Time)
  - IRT (Isochronous Real-Time), minimum send cycle 500 µs
- Connects to controls as PROFINET IO devices using PROFIdrive compliant with Specification V4
- Standard TCP/IP communication for engineering processes with the STARTER commissioning tool and for accessing the integrated web server
- Integrated 2-port switch with two RJ45 sockets based on the ERTEC ASIC. The optimum topology (line, star, tree) can therefore be configured without additional external switches.

A 24 V supply voltage must be connected to terminal X124 for the digital outputs to be used. A CompactFlash card with firmware version V4.4 or higher is a mandatory requirement for operation of the CU310-2 Control Unit.

[1] For further information, see https://support.industry.siemens.com/cs/document/104020669

[2] The STARTER commissioning tool is also available on the Internet at www.siemens.com/starter

© Siemens AG 2017

Integration (continued)

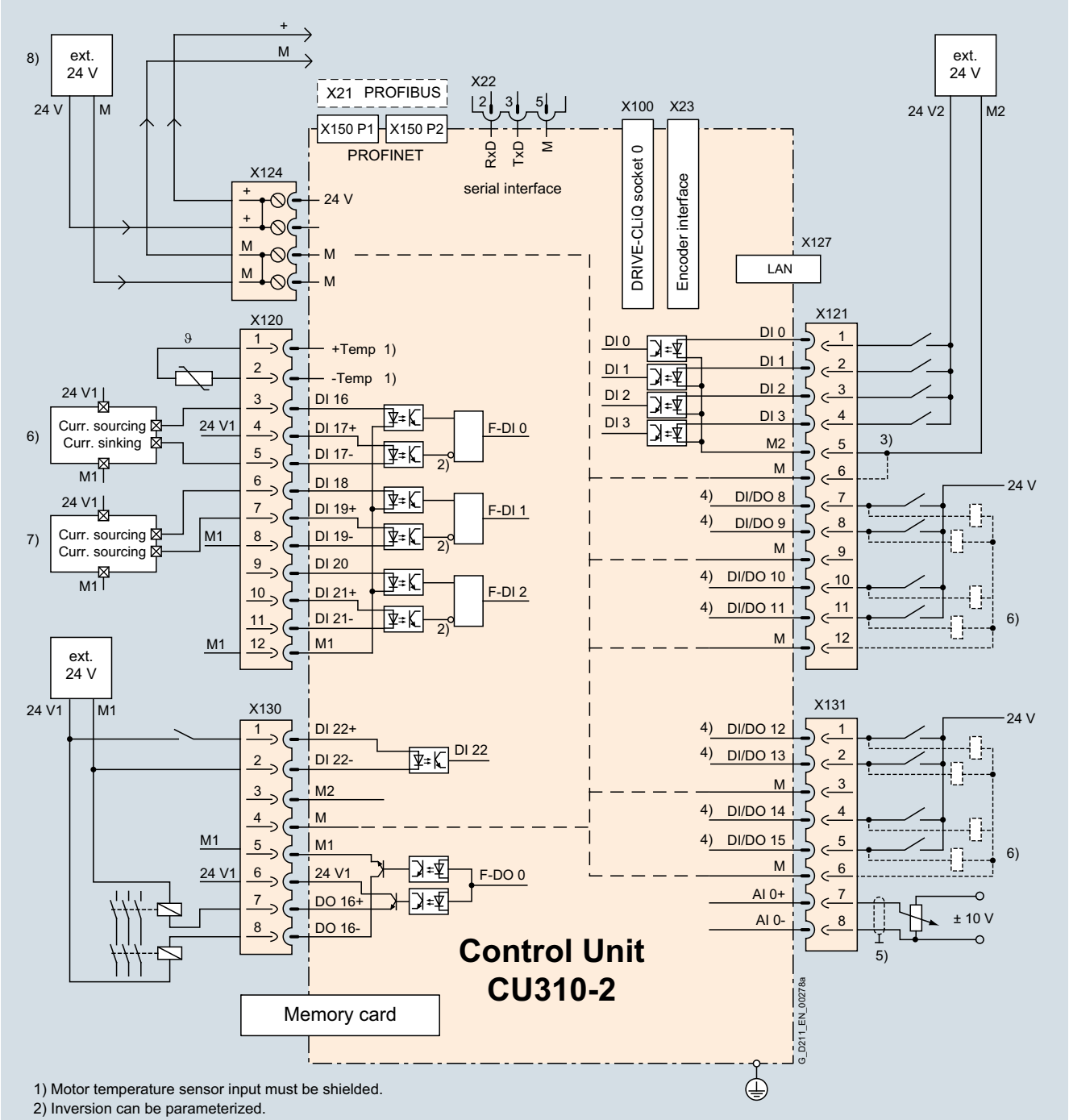

1) Motor temperature sensor input must be shielded.
2) Inversion can be parameterized.
3) Jumper open, isolation for digital inputs (DI).
4) High-speed inputs must be shielded.
5) Analog input must be shielded.
6) Safety-related control with current sourcing and current sinking outputs.
7) Safety-related control with two current sourcing outputs.
8) In order to use the digital outputs, an external 24 V power supply must be connected to terminal X124.

Connection example of CU310-2 Control Unit

© Siemens AG 2017

Technical specifications

	CU310-2 Control Unit
PROFINET **PROFIBUS**	6SL3040-1LA01-0AA0 6SL3040-1LA00-0AA0
Current requirement, max. At 24 V DC, without taking into account the digital outputs and DRIVE-CLiQ supply	0.35 A for CU310-2 + 0.5 A for PM240-2 Power Module
Conductor cross-section, max.	2.5 mm^2
Fuse protection, max.	20 A
Digital inputs	In accordance with IEC 61131-2 Type 1 5 floating digital inputs 8 bidirectional non-floating digital inputs/digital outputs 3 parameterizable, fail-safe digital inputs (floating) or alternatively 6 parameterizable digital inputs (floating) 5 bidirectional floating digital inputs/outputs
• Voltage	-3 ... +30 V
• Low level (an open digital input is interpreted as "low")	-3 ... +5 V
• High level	15 ... 30 V
• Current consumption at 24 V DC, typ.	3.5 mA
• Delay time of digital inputs [1], approx.	
- L → H	50 µs
- H → L	100 µs
• Delay time of high-speed digital inputs [1], approx. (high-speed digital inputs can be used for position detection)	
- L → H	5 µs
- H → L	50 µs
• Conductor cross-section, max.	1.5 mm^2
Digital outputs (continuously short-circuit proof)	8 bidirectional non-floating digital inputs/digital outputs
• Voltage	24 V DC
• Load current per digital output [2], max.	500 mA
• Delay time [1], typ./max.	
- L → H	150 µs/400 µs
- H → L	75 µs/100 µs
• Conductor cross-section, max.	1.5 mm^2
Analog input	The analog input can be switched between current input and voltage input
• As voltage input	-10 ... +10 V; R_i > 100 kΩ Resolution: 12 bits + sign (referred to the maximum range that can be resolved -11 ... +11 V)
• As current input	-20 ... +20 mA; R_i > 250 Ω Resolution: 11 bits + sign (referred to -22 ... 22 mA) Max. range that can be resolved: -44 ... +44 mA

	CU310-2 Control Unit
PROFINET **PROFIBUS**	6SL3040-1LA01-0AA0 6SL3040-1LA00-0AA0
Encoder evaluation	• Incremental encoder TTL/HTL • SSI encoder without incremental signals
• Input impedance	
- TTL	570 Ω
- HTL, max.	16 mA
• Encoder supply	24 V DC/0.35 A or 5 V DC/0.35 A
• Encoder frequency, max.	300 kHz
• SSI baud rate	100 ... 250 kBaud
• Resolution absolute position SSI	30 bits
• Cable length, max.	
- TTL encoder	100 m (328 ft) (only bipolar signals permitted) [3]
- HTL encoder	100 m (328 ft) for unipolar signals 300 m (984 ft) for bipolar signals [3]
- SSI encoder	100 m (328 ft)
Power loss	<20 W
PE connection	M4 screw
Dimensions	
• Width	73 mm (2.87 in)
• Height	
- CU310-2 PN	191 mm (7.52 in)
- CU310-2 DP	187 mm (7.36 in)
• Depth	75 mm (2.95 in)
Weight, approx.	0.95 kg (2.09 lb)
Certificate of suitability	cULus

[1] The specified delay times refer to the hardware. The actual reaction time depends on the time slot in which the digital input or output is processed.

[2] In order to use the digital outputs, an external 24 V power supply must be connected to terminal X124.

[3] Signal cables twisted in pairs and shielded.

© Siemens AG 2017

Overview

CU320-2 PN Control Unit

The communication, open-loop and closed-loop control functions for one or more Motor Modules and the Line Module are executed in a CU320-2 Control Unit. The CU320-2 Control Unit is essentially designed for multi-axis operation.

CU320-2 DP Control Unit with BOP20 Basic Operator Panel

CompactFlash card for CU320-2 Control Units

The CompactFlash card contains the firmware and parameter settings. The CompactFlash card is plugged into the appropriate slot on the CU320-2 Control Unit.

A CU320-2 Control Unit can perform the communication, open-loop and closed-loop control functions for several Motor Modules. The computing capacity required increases in proportion to the number of connected Motor Modules and system components and in relation to the dynamic response required. For the CU320-2 Control Unit, the performance expansion is necessary for machines with 4 axes or more. The utilization of the CU320-2 Control Unit can be calculated with the SIZER for Siemens Drives engineering tool.

In addition to the firmware, the CompactFlash Card also contains licensing codes which are required to enable firmware options.

In addition to the Article No., the following firmware options can currently be ordered with or without performance expansion:

- Safety Integrated Extended Functions, order codes per axis **F01 to F06** (see section Safety Integrated)
- High output frequency [1], order code **J01**
- DCB Extension, order code **U01** (further information about DCB Extension and license upgrades can be found under Drive Control Chart (DCC) in the section Engineering tools)

After the appropriate license has been purchased via the WEB License Manager available on the Internet, firmware options can also be subsequently enabled.

Further information is available on the Internet at www.siemens.com/automation/license

Design

CU320-2 Control Units feature the following interfaces as standard:

- 4 DRIVE-CLiQ sockets for communication with other DRIVE-CLiQ devices, e.g. Motor Modules, Line Modules, Sensor Modules, Terminal Modules
- CU320-2 PN: 1 PROFINET interface with 2 ports (RJ45 sockets) with PROFIdrive V4 profile
- CU320-2 DP: 1 PROFIBUS interface with PROFIdrive V4 profile
- 12 parameterizable digital inputs (floating)
- 8 parameterizable bidirectional digital inputs/outputs (non-floating)
- 1 serial RS232 interface
- 1 interface for the BOP20 Basic Operator Panel
- 1 slot for the CompactFlash card on which firmware and parameters are stored
- 1 slot for mounting an option module (e.g. TB30 Terminal Board)
- CU320-2 DP: 2 rotary coding switches for manually setting the PROFIBUS address
- 1 Ethernet interface for commissioning and diagnostics
- 3 test sockets and one reference ground for commissioning support
- 1 connection for the electronics power supply via the 24 V DC supply connector
- 1 PE/protective conductor connection
- 1 ground connection

A shield connection for the signal cable shield of an option module is located on the CU320-2 Control Unit.

The available slot is used to optionally expand the interfaces, for example, to include additional terminals or for communication purposes.

The status of the CU320-2 Control Unit is indicated via multicolor LEDs.

[1] For further information, see https://support.industry.siemens.com/cs/document/104020669

© Siemens AG 2017

Design (continued)

As the firmware and parameter settings are stored on a plug-in CompactFlash card, the Control Unit can be changed without the need for software tools.

The CU320-2 Control Unit can be mounted on the side of the Line Module in booksize format via brackets integrated in a Line Module. The CU320-2 Control Unit can also be fixed to the wall of the control cabinet using the integrated fixing lugs. As the CU320-2 Control Unit is not as deep as the Line Modules, suitable spacers are available to increase the depth of the CU320-2 Control Unit to 270 mm (10.6 in).

Selection and ordering data

Description	Article No.
CU320-2 PN Control Unit Without CompactFlash card	**6SL3040-1MA01-0AA0**
CU320-2 DP Control Unit Without CompactFlash card	**6SL3040-1MA00-0AA0**
CompactFlash card for CU320-2 Control Unit without Safety license	
- Without performance expansion	**6SL3054-0E■00-1BA0**
- With performance expansion firmware option	**6SL3054-0E■01-1BA0**
CompactFlash card for CU320-2 Control Unit with Safety license	
• For **1 axis**	
- Without performance expansion	**6SL3054-0E■00-1BA0-Z F01**
- With performance expansion firmware option	**6SL3054-0E■01-1BA0-Z F01**
• For **2 axes**	
- Without performance expansion	**6SL3054-0E■00-1BA0-Z F02**
- With performance expansion firmware option	**6SL3054-0E■01-1BA0-Z F02**
• For **3 axes**	
- Without performance expansion	**6SL3054-0E■00-1BA0-Z F03**
- With performance expansion firmware option	**6SL3054-0E■01-1BA0-Z F03**
• For **4 axes**	
- With performance expansion firmware option	**6SL3054-0E■01-1BA0-Z F04**
• For **5 axes**	
- With performance expansion firmware option	**6SL3054-0E■01-1BA0-Z F05**
• For **6 axes**	
- With performance expansion firmware option	**6SL3054-0E■01-1BA0-Z F06**
• and with high output frequency [1]	**6SL3054-0E■00-1BA0-Z J01**
• and with DCB Extension license (firmware V4.6 and higher) (further information about DCB Extension and license upgrades can be found under Drive Control Chart (DCC) in section Engineering tools)	**6SL3054-0E■01-1BA0-Z U01**
Firmware **V4.7**	**H**
Firmware **V4.8**	**J**

Description	Article No.
Licensing	
• Option Performance Extension including Certificate of License for additional licensing of a CompactFlash Card	**6SL3074-0AA01-0AA0**
• Safety Integrated Extended Functions Upgrading license for one axis on a CompactFlash card	**6SL3074-0AA10-0AA0**
• High output frequency [1] Upgrading license to enable frequencies above 550 Hz for all axes on a CompactFlash card	**6SL3074-0AA02-0AA0**
• Cogging torque compensation Option to compensate motor cogging torques at low speeds License for one axis is provided on a CompactFlash card	**6SL3074-0AA15-0AA0**
• Advanced Position Control (APC) Option to dampen load oscillations by taking into account motor and load-side state variables License for one axis is provided on a CompactFlash card	**6SL3074-0AA05-0AA0**
Accessories	
Spacers (2 units) Increases the depth of the CU320-2 Control Unit to 270 mm (10.6 in) (if the integrated brackets are not to be used, but the depth still has to be 270 mm (10.6 in)	**6SL3064-1BB00-0AA0**
BOP20 Basic Operator Panel	**6SL3055-0AA00-4BA0**
STARTER commissioning tool [2]	**6SL3072-0AA00-0AG0**
Accessories for re-ordering	
Dust protection blanking plugs (50 units) For DRIVE-CLiQ port	**6SL3066-4CA00-0AA0**

Information on connectors and cables is provided in

- section MOTION-CONNECT connection systems
- catalog IK PI
- Siemens Industry Mall:
  www.siemens.com/industrymall

Integration

DRIVE-CLiQ components such as Motor Modules and Active Line Modules can be connected to a CU320-2 Control Unit. The number of modules depends on the performance required, including duty type and additional functions.

The BOP20 Basic Operator Panel can also be snapped onto the CU320-2 Control Unit during operation to perform diagnostics.

The CU320-2 Control Unit and other connected components are commissioned and diagnosed with the STARTER commissioning tool.

A CompactFlash card with firmware version V4.4 or higher is a mandatory requirement for operation of the CU320-2 PN Control Unit.
A CompactFlash card with firmware version V4.3 or higher is a mandatory requirement for operation of the CU320-2 DP Control Unit.

[1] For further information, see
https://support.industry.siemens.com/cs/document/104020669

[2] The STARTER commissioning tool is also available on the Internet at
www.siemens.com/starter

© Siemens AG 2017

Integration (continued)

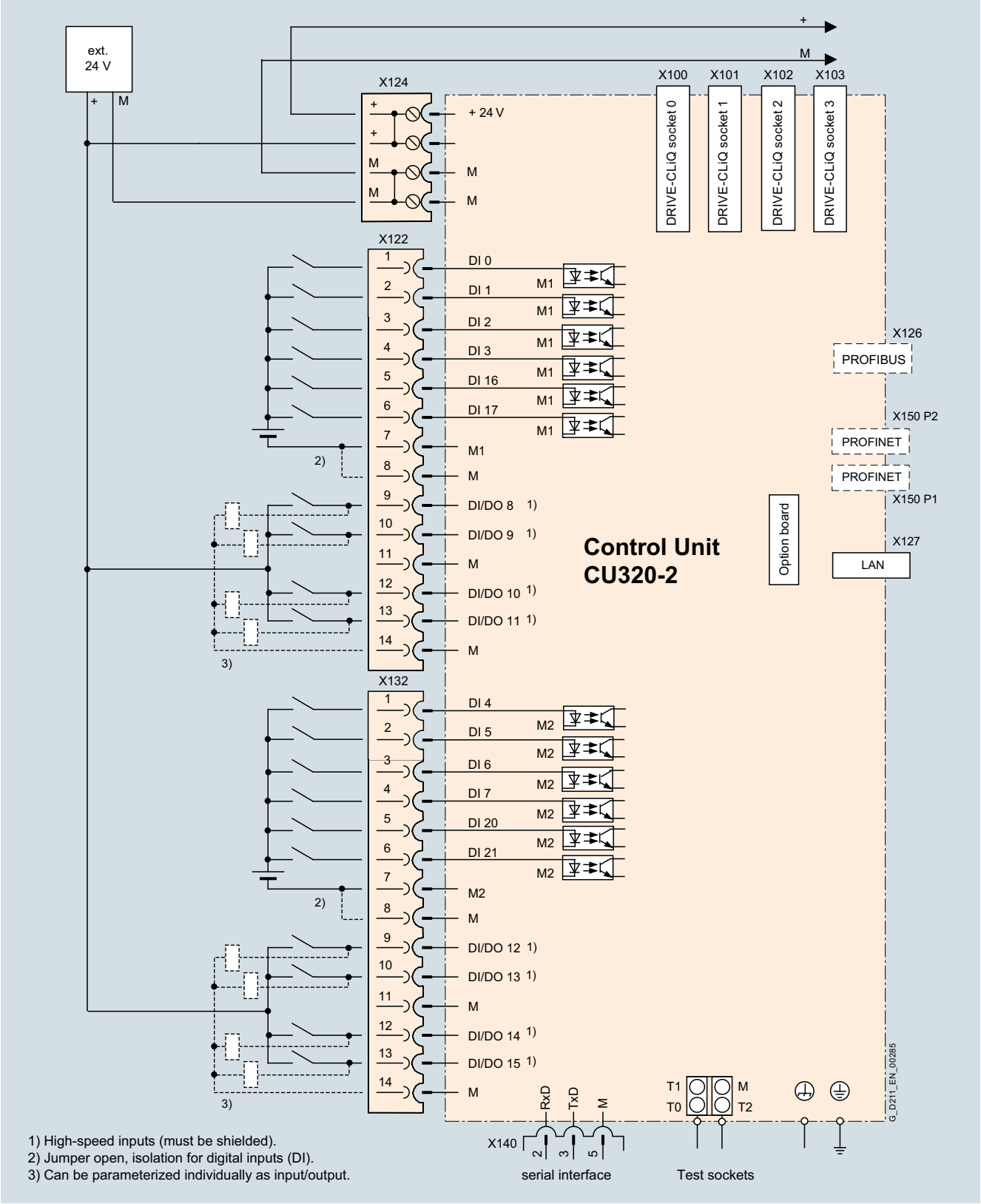

Connection example of a CU320-2 Control Unit

© Siemens AG 2017

Technical specifications

	CU320-2 Control Unit
PROFINET **PROFIBUS**	6SL3040-1MA01-0AA0 6SL3040-1MA00-0AA0
Current requirement, max. At 24 V DC, without taking account of digital outputs, expansion option slot and DRIVE-CLiQ supply	1.0 A
Conductor cross-section, max.	2.5 mm^2
Fuse protection, max.	20 A
Digital inputs	In accordance with IEC 61131-2 Type 1 12 floating digital inputs 8 bidirectional non-floating digital inputs/digital outputs
• Voltage	-3 ... +30 V
• Low level (an open digital input is interpreted as "low")	-3 ... +5 V
• High level	15 ... 30 V
• Current consumption at 24 V DC, typ.	3.5 mA
• Delay time of digital inputs [1], approx.	
- L → H	5 µs
- H → L	50 µs
• Conductor cross-section, max.	1.5 mm^2
Digital outputs Sustained short-circuit strength	8 bidirectional non-floating digital inputs/digital outputs
• Voltage	24 V DC
• Load current per digital output, max.	500 mA
• Delay time [1], typ./max.	
- L → H	150 µs/400 µs
- H → L	75 µs/100 µs
• Conductor cross-section, max.	1.5 mm^2
Power loss	24 W
PE connection	M5 screw
Ground connection	M5 screw
Dimensions	
• Width	50 mm (1.97 in)
• Height	300 mm (11.81 in)
• Depth	226 mm (8.90 in)
Weight, approx.	2.3 kg (5.07 lb)
Certificate of suitability	cULus

[1] The specified delay times refer to the hardware. The actual reaction time depends on the time slot in which the digital input or output is processed.

© Siemens AG 2017

Overview

BOP20 Basic Operator Panel

Parameters can be set, diagnostics information (e.g. alarm and fault messages) read out and faults acknowledged using the BOP20 Basic Operator Panel.

Design

The BOP20 Basic Operator Panel has a backlit two-line display area with six keys.

The integrated plug connector on the rear of the BOP20 Basic Operator Panel provides its power and establishes communication with the Control Unit.

Selection and ordering data

Description	Article No.
BOP20 Basic Operator Panel	**6SL3055-0AA00-4BA0**

Integration

The BOP20 Basic Operator Panel can be inserted on the following Control Units:

- SINAMICS S110
  - CU305
- SINAMICS S120
  - CU310-2
  - CU320-2

CU310-2 PN Control Unit with inserted BOP20 Basic Operator Panel

CU320-2 PN Control Unit with inserted BOP20 Basic Operator Panel

© Siemens AG 2017

Overview

CUA31 Control Unit Adapter

The CUA31 Control Unit Adapter converts the PM-IF interface to a DRIVE-CLiQ interface. The CUA31 Control Unit Adapter allows Power Modules in blocksize format to operate on a Control Unit, e.g. as a single axis next to a multi-axis drive. In this case, the CUA31 Control Unit Adapter must be the last device in the DRIVE-CLiQ link from the viewpoint of the Control Unit.

Design

The CUA31 Control Unit Adapter features the following connections and interfaces:

- 1 temperature sensor input for KTY84-130, Pt1000 or PTC (Pt1000 can be used from firmware V4.7 HF17)
- 3 DRIVE-CLiQ sockets
- 1 connection for the electronics power supply via the 24 V DC supply connector
- 1 Safe Stop input

The status of the CUA31 Control Unit Adapter is indicated via multi-color LEDs.

Selection and ordering data

Description	Article No.
CUA31 Control Unit Adapter Without DRIVE-CLiQ cable	**6SL3040-0PA00-0AA1**
Accessories for re-ordering	
Dust protection blanking plugs (50 units) For DRIVE-CLiQ port	**6SL3066-4CA00-0AA0**

Technical specifications

	CUA31 Control Unit Adapter 6SL3040-0PA00-0AA1
Current requirement, max. at 24 V DC without DRIVE-CLiQ supply	0.15 A for CUA31 + max. 0.5 A for PM240-2 Power Module
• Conductor cross-section, max.	2.5 mm^2
Power loss, max.	2.4 W
PE connection	M4 screw
Dimensions	
• Width	73 mm (2.87 in)
• Height	165.8 mm (6.53 in)
• Depth	37.3 mm (1.47 in)
Weight, approx.	0.31 kg (0.68 lb)
Certificate of suitability	cULus

© Siemens AG 2017

Integration

The CUA31 Control Unit Adapter is snapped onto the Power Module in blocksize format and communicates with a CU320-2 Control Unit, a SINUMERIK NCU 7.x or a SIMOTION D Control Unit via a DRIVE-CLiQ connection.

The CUA31 Control Unit Adapter's power is supplied by the Power Module via the PM-IF interface. If the CUA31 Control Unit Adapter needs to communicate when the Power Module is switched off, it must be supplied with 24 V DC from an external source.

Other DRIVE-CLiQ devices such as Sensor Modules or Terminal Modules can be connected to the CUA31 Control Unit Adapter.

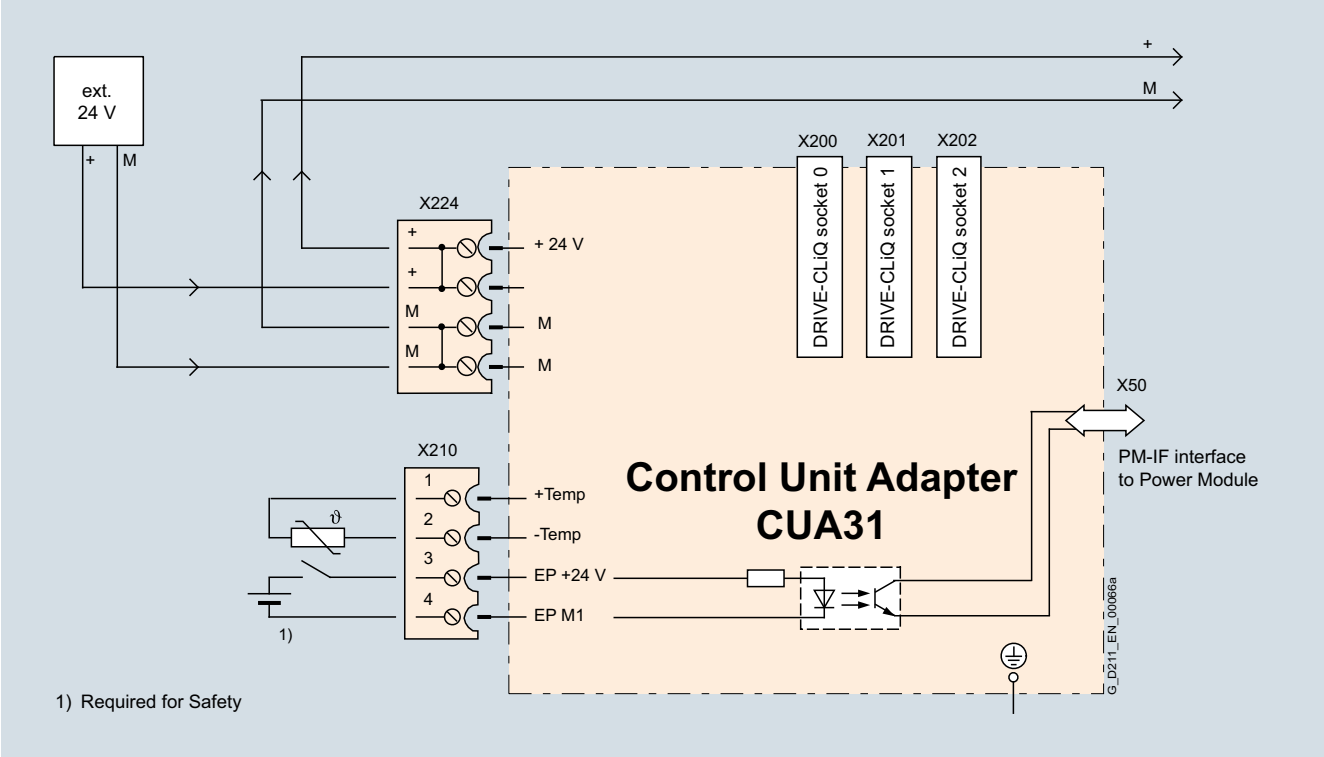

© Siemens AG 2017

Overview

CUA32 Control Unit Adapter

The CUA32 Control Unit Adapter converts the PM-IF interface to a DRIVE-CLiQ interface. The CUA32 Control Unit Adapter is also equipped with an integral encoder evaluation device which can be configured for an HTL/TTL or SSI encoder. The CUA32 Control Unit Adapter allows Power Modules in blocksize format to operate on a Control Unit, e.g. as a single axis next to a multi-axis drive. In this case, the CUA32 Control Unit Adapter must be the last device in the DRIVE-CLiQ link from the viewpoint of the Control Unit.

Design

The CUA32 Control Unit Adapter features the following connections and interfaces:

- 1 temperature sensor input for KTY84-130, Pt1000 or PTC (Pt1000 can be used from firmware V4.7 HF17)
- 3 DRIVE-CLiQ sockets
- 1 connection for the electronics power supply via the 24 V DC power supply connector
- 1 Safe Stop input
- 1 encoder evaluator for
  - Incremental encoder TTL/HTL
  - SSI encoder without incremental signals

The status of the CUA32 Control Unit Adapter is indicated via multi-color LEDs.

Selection and ordering data

Description	Article No.
CUA32 Control Unit Adapter Without DRIVE-CLiQ cable	**6SL3040-0PA01-0AA0**
Accessories for re-ordering	
Dust protection blanking plugs (50 units) For DRIVE-CLiQ port	**6SL3066-4CA00-0AA0**

Technical specifications

	CUA32 Control Unit Adapter 6SL3040-0PA01-0AA0
Current requirement, max. at 24 V DC without DRIVE-CLiQ supply or encoder supply	0.15 A for CUA32 + max. 0.5 A for PM240-2 Power Module
• Conductor cross-section, max.	2.5 mm^2
Encoder evaluation	• Incremental encoder TTL/HTL (can be parameterized) • SSI encoder without incremental signals
• Input impedance	
- TTL	570 Ω
- HTL, max.	16 mA
• Encoder supply	24 V DC/0.35 A or 5 V DC/0.35 A
• Encoder frequency, max.	300 Hz
• SSI baud rate	100 ... 250 kBaud
• Resolution absolute position SSI	30 bits
• Cable length, max.	
- TTL encoder	100 m (328 ft) (only bipolar signals permitted) [1]
- HTL encoder	100 m (328 ft) for unipolar signals 300 m (984 ft) for bipolar signals [1]
- SSI encoder	100 m (328 ft)
Power loss, max.	2.6 W
PE connection	M4 screw
Dimensions	
• Width	73 mm (2.87 in)
• Height	165.8 mm (6.53 in)
• Depth	37.3 mm (1.47 in)
Weight, approx.	0.32 kg (0.71 lb)
Certificate of suitability	cULus

[1] Signal cables twisted in pairs and shielded.

© Siemens AG 2017

Integration

The CUA32 Control Unit Adapter is snapped onto the Power Module in blocksize format and communicates with a CU320-2 Control Unit, a SINUMERIK NCU 7.x or a SIMOTION D Control Unit via a DRIVE-CLiQ connection.

The CUA32 Control Unit Adapter's power is supplied by the Power Module via the PM-IF interface. If the CUA32 Control Unit Adapter needs to communicate when the Power Module is switched off, it must be supplied with 24 V DC from an external source.

Other DRIVE-CLiQ devices such as Sensor Modules or Terminal Modules can be connected to the CUA32 Control Unit Adapter.

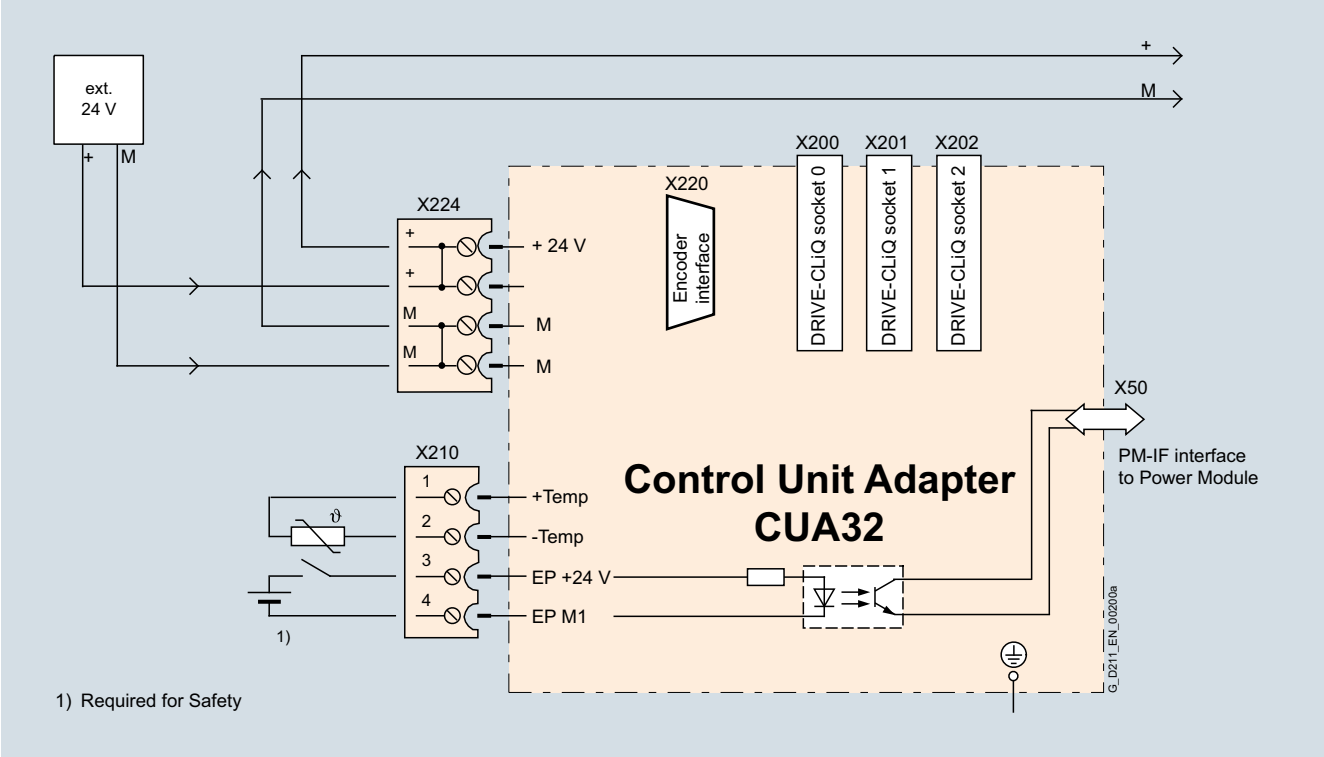

© Siemens AG 2017

Overview

CBE20 Communication Board

The CBE20 Communication Board can be used to connect to a PROFINET IO network via a CU320-2 Control Unit.

The SINAMICS S120 drive system therefore assumes the function of a PROFINET IO device and can perform the following functions:

- PROFINET IO device
- 100 Mbit/s full duplex
- Supports real-time classes of PROFINET IO:
  - RT (Real-Time)
  - IRT (Isochronous Real-Time), minimum send cycle 500 µs
- Connection to control systems as PROFINET IO devices in accordance with PROFIdrive, Specification V4
- Standard TCP/IP communication for engineering processes using the STARTER commissioning tool
- Integrated 4-port switch with four RJ45 sockets based on the PROFINET ASIC ERTEC400. The optimum topology (line, star, tree) can therefore be configured without additional external switches
- Supports the functions "media redundancy" and "shared device"

The CBE20 Communication Board is required if:

- a SINAMICS S120 or SINAMICS S150 converter with a CU320-2 DP Control Unit (PROFIBUS) should be connected to a PROFINET-IO network
- SINAMICS Link is to be used to directly exchange data between several CU320-2 DP (PROFIBUS) or CU320-2 PN (PROFINET) Control Units without using a higher-level control system
- EtherNet/IP connectivity is required.

Integration

The CBE20 Communication Board plugs into the option slot on the CU320-2 Control Unit.

SINAMICS Link

SINAMICS Link can be used to directly exchange data between several CU320-2 DP (PROFIBUS) or CU320-2 PN (PROFINET) Control Units without using a higher-level control system. In this case, the CBE20 Communication Board is required. Possible applications for the SINAMICS Link include:

- Torque distribution for several drives
- Setpoint cascading for several drives
- Load distribution for drives coupled through a material web
- Couplings between SINAMICS G or SINAMICS S with the CU320-2 Control Unit and SINAMICS DC Master with CUD Control Units.

Participants other than CU320-2 Control Units and/or CUD Control Units of the SINAMICS DC Master cannot be integrated into this communication.

SINAMICS Link is activated by appropriately parameterizing the Control Units of the participants.

Selection and ordering data

Description	Article No.
CBE20 Communication Board	**6SL3055-0AA00-2EB0**
Accessories	
Industrial Ethernet FC	
• RJ45 Plug 180 (1 unit)	**6GK1901-1BB10-2AA0**
• RJ45 Plug 180 (10 units)	**6GK1901-1BB10-2AB0**
• Stripping tool	**6GK1901-1GA00**
• Standard cable GP 2x2	**6XV1840-2AH10**
• Flexible cable GP 2x2	**6XV1870-2B**
• Trailing cable GP 2x2	**6XV1870-2D**
• Trailing cable 2x2	**6XV1840-3AH10**
• Marine cable 2x2	**6XV1840-4AH10**

Additional information on connectors and cables is provided in

- section MOTION-CONNECT connection systems
- catalog IK PI
- Siemens Industry Mall: www.siemens.com/industrymall

Technical specifications

	CBE20 Communication Board 6SL3055-0AA00-2EB0
Current requirement at 24 V DC	0.16 A
Power loss	2.4 W
Weight, approx.	0.1 kg (0.22 lb)
Certificate of suitability	cULus

© Siemens AG 2017

Overview

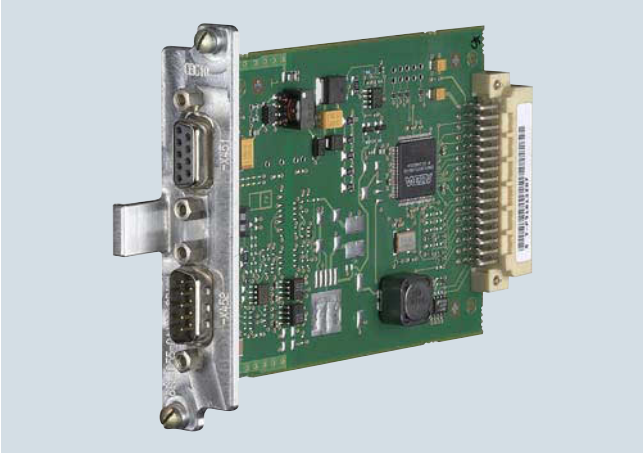

CBC10 Communication Board

The CBC10 Communication Board is used to interface the CU320-2 Control Unit and therefore the drive system to the CAN (Controller Area Network) protocol. The board's driver software fulfills the standards of the following CANopen specification of the CiA organization (CAN in Automation):

- Communication profiles in accordance with DS 301
- Drive profile in accordance with DSP 402
  (in this case Profile Velocity Mode)
- EDS (Electronic Data Sheet) in accordance with DSP 306
- Operational status signaling in accordance with DSP 305

Note:

The CAN address is set on the CU320-2 DP Control Unit by means of the two address switches.
These address switches are not available on the CU320-2 PN Control Unit. In this case, the address can be set by means of parameters.

Integration

The CBC10 Communication Board plugs into the option slot on the CU320-2 Control Unit. Two SUB-D connections for input and output are provided for the CAN interface on the CBC10 Communication Board.

Selection and ordering data

Description	Article No.
CBC10 Communication Board	**6SL3055-0AA00-2CA0**

Technical specifications

	CBC10 Communication Board 6SL3055-0AA00-2CA0
Current requirement, max. at 24 V DC via Control Unit CU320-2	0.05 A
Power loss, max.	3 W
Weight, approx.	0.1 kg (0.22 lb)
Certificate of suitability	cULus

© Siemens AG 2017

Overview

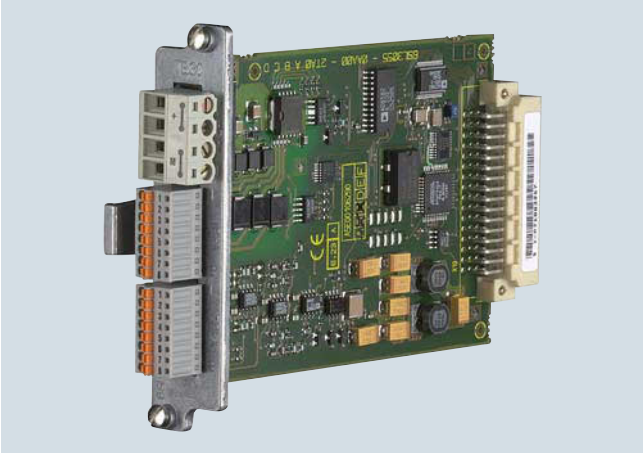

TB30 Terminal Board

The TB30 Terminal Board supports the addition of digital inputs/digital outputs and analog inputs/analog outputs to a Control Unit.

Design

The following are located on the TB30 Terminal Board:

- Power supply for digital inputs/digital outputs
- 4 digital inputs
- 4 digital outputs
- 2 analog inputs
- 2 analog outputs

A shield connection for the signal cable shield is located on the Control Unit.

Selection and ordering data

Description	Article No.
TB30 Terminal Board	**6SL3055-0AA00-2TA0**

Technical specifications

	TB30 Terminal Board 6SL3055-0AA00-2TA0
Current requirement, max. at 24 V DC via Control Unit without taking account of digital outputs	0.05 A
• Conductor cross-section, max.	2.5 mm^2
• Fuse protection, max.	20 A
Digital inputs in accordance with IEC 61131-2 Type 1	
• Voltage	-3 ... +30 V
• Low level (an open digital input is interpreted as "low")	-3 ... +5 V
• High level	15 ... 30 V
• Current consumption at 24 V DC, typ.	6 mA
• Delay time of digital inputs [1], approx.	
- L → H	50 µs
- H → L	100 µs
• Conductor cross-section, max.	0.5 mm^2
Digital outputs (continuously short-circuit proof)	
• Voltage	24 V DC
• Load current per digital output, max.	500 mA
• Delay time of digital outputs [1], approx.	150 µs
• Conductor cross-section, max.	0.5 mm^2
Analog inputs (difference)	
• Voltage range (an open analog input is interpreted as 0 V)	-10 ... +10 V
• Internal resistance R_i	65 kΩ
• Resolution [2]	13 bits + sign
• Conductor cross-section, max.	0.5 mm^2
Analog outputs (continuously short-circuit proof)	
• Voltage range	-10 ... +10 V
• Max. load current	-3 ... +3 mA
• Resolution	11 bits + sign
• Settling time, approx.	200 µs
• Conductor cross-section, max.	0.5 mm^2
Power loss, max.	3 W
Weight, approx.	0.1 kg (0.22 lb)
Certificate of suitability	cULus

[1] The specified delay times refer to the hardware. The actual reaction time depends on the time slot in which the digital input/output is processed.

[2] If the analog input is to be operated in the signal processing sense with continuously variable input voltage, the sampling frequency $f_a = 1/t_{\text{time slice}}$ must be at least twice the value of the highest signal frequency f_{max}.

© Siemens AG 2017

Integration

The TB30 Terminal Board is inserted in the slot to optionally expand the CU320-2 Control Unit.

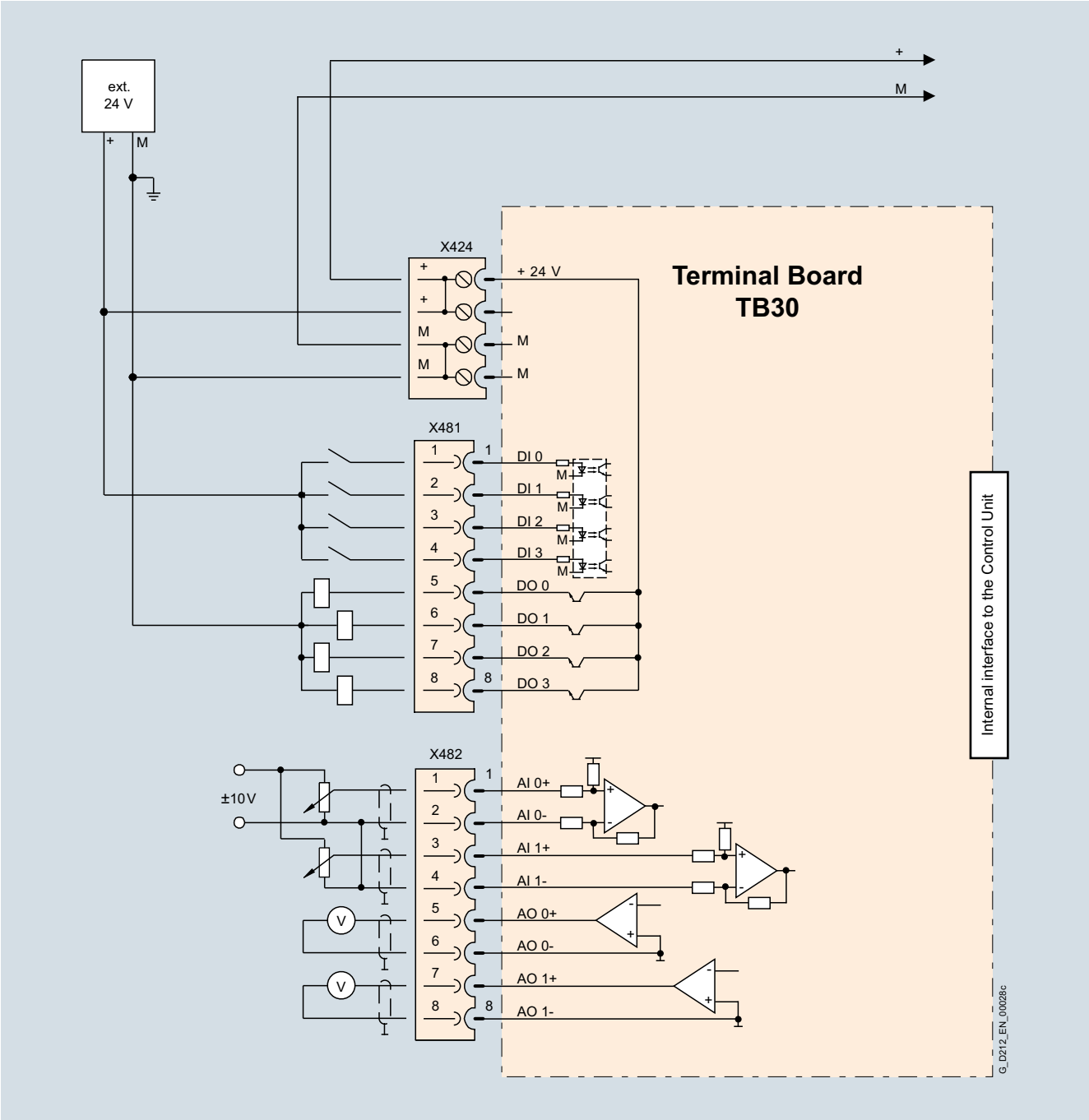

Connection example of a TB30 Terminal Board

© Siemens AG 2017

Technical specifications

General technical specifications

Unless explicitly specified otherwise, the following technical specifications are valid for all components of the SINAMICS S120 booksize drive system.

Note:

When engineering the complete SINAMICS S120 drive, the system data of the associated Control Units, supplementary system components, DC link components and Sensor Modules must be taken into consideration.

Electrical specifications			
Line voltage	380 ... 480 V 3 AC ±10 % (-15 % <1 min)		
Line system configurations	Grounded TN/TT systems and non-grounded IT systems		
Line frequency	47 ... 63 Hz		
Electronics power supply	24 V DC -15 %/+20 % [1], safety extra low-voltage (PELV/SELV)		
Short-circuit current rating (SCCR) (Short Circuit Current Rating) according to UL 508C (up to 600 V)	1.1 ... 447 kW: 65 kA		
Electromagnetic compatibility according to EN 61800-3	Second environment, Category C2/C3 For further information, see section configuration notes		
Overvoltage category according to IEC/EN 61800-5-1	III		
Mechanical specifications			
Degree of protection			
• According to EN 60529	IP20		
• According to UL 508C/UL 61800-5-1	Open type		
Protection class			
• Line circuits with protective conductor connection according to IEC 61800-5-1	I		
• Electronic circuits	Safety extra low-voltage PELV/SELV		
Ambient conditions			
	Storage In product packaging	**Transport** In transport packaging	**Operation**
Climatic environmental conditions	Class 1K4 acc. to EN 60721-3-1 -25 ... +55 °C (-13 ... +131 °F)	Class 2K4 acc. to EN 60721-3-2 -40 ... +70 °C (-40 ...+158 °F)	Class 3K3 [3] acc. to EN 60721-3-3 For operation without derating [4]: 0 ... +40 °C (32 ...104 °F) For operation with derating: >40 ... +55 °C (>32 ... 131 °F) Relative humidity 5 ... 95 %
Environmental class/ harmful chemical substances	Class 1C2 acc. to EN 60721-3-1	Class 2C2 acc. to EN 60721-3-2	Class 3C2 acc. to EN 60721-3-3
Organic/biological influences	Class 1B1 acc. to EN 60721-3-1	Class 2B1 acc. to EN 60721-3-2	Class 3B1 acc. to EN 60721-3-3
Pollution degree [2] acc. to IEC/EN 61800-5-1	2		
Installation altitude			
• Up to 1000 m (3281 ft) above sea level	Without derating		
• From 1000 m (3281 ft) up to 2000 m (6562 ft))above sea level observe the derating characteristics	• Reduction of the output current by 10 % per 1000 m (3281 ft) or • Reduction of the ambient temperature by 5 K per 1000 m (3281 ft)		
• From 2000 m (6562 ft) up to 4000 m (13124 ft) above sea level observe the derating characteristics			
- Power components	• Reduction of the output current by 10 % per 1000 m (3281 ft) or • Reduction of the ambient temperature by 5 K per 1000 m (3281 ft) and additionally: • Operation on line supply systems with grounded neutral point, or • Operation with an isolating transformer with secondary grounded neutral point		
- Control Units	• Reduction of the ambient temperature by 5 K per 1000 m (3281 ft)		

[1] When using a motor holding brake, restricted voltage tolerances (24 V ±10 %) might need to be taken into account.

[2] The components must be protected against conductive pollution, e.g. by installing them in a control cabinet with degree of protection IP54 according to IEC 60529 or NEMA 12. If conductive pollution can be excluded at the installation site, a lower degree of cabinet protection is permissible.

[3] Better than 3K3 through increased ruggedness regarding the temperature range and humidity. Oil mist, salt mist, ice formation, condensation, dripping water, spraying water, splashing water and water jets are not permitted.

[4] Also carefully observe the permissible temperatures for the Control Unit and operator panel.

© Siemens AG 2017

Technical specifications (continued)

Mechanical strength			
	Storage In product packaging	**Transport** In transport packaging	**Operation**
Vibratory load	Class 1M2 acc. to EN 60721-3-1	Class 2M3 acc. to EN 60721-3-2	Class 3M1 acc. to EN 60721-3-3 **Test values** acc. to EN 60068-2-6: 10 oscillations per axis in the range: 10 ... 57 Hz constant deflection 0.075 mm 57 ... 150 Hz constant acceleration 9.81 m/s^2 (1 × *g*)
Shock load	Class 1M2 acc. to EN 60721-3-1	Class 2M3 acc. to EN 60721-3-2	Class 3M1 acc. to EN 60721-3-3 **Test values** acc. to EN 60068-2-27: 3 shocks per axis in both directions Peak acceleration 49 m/s^2 (5 × *g*); duration 30 ms
Certificates			
Declarations of conformity	CE (Low Voltage, EMC and Machinery Directive)		
Certificates of suitability	cULus		

© Siemens AG 2017

Overview

Active Line Module in booksize format

Active Line Modules are self-commutated infeed/regenerative feedback units (with IGBTs in the infeed and regenerative feedback directions) that generate a controlled DC link voltage. This means that the connected Motor Modules are decoupled from the line voltage. Line voltage fluctuations within the permissible supply tolerances have no effect on the motor voltage. Active Line Modules are designed for connection to grounded star (TN, TT) and non-grounded symmetrical (IT) supply systems.

The DC link is pre-charged via integrated precharging resistors.

In order to operate an Active Line Module, an associated Active Interface Module is required.

Design

The Active Line Modules in booksize format feature the following connections and interfaces as standard:

- 1 power connection via screw-type terminals
- 1 connection for the 24 V DC electronics power supply via the 24 V terminal adapter included in the scope of supply
- 1 DC link connection via integrated DC link busbars
- 3 DRIVE-CLiQ sockets
- 2 PE (protective earth) connections
- 1 temperature sensor input for KTY84-130, Pt1000 or PTC (Pt1000 can be used from firmware V4.7 HF17)

The status of the Active Line Modules is indicated via two multi-color LEDs.

For the Active Line Module with a width of 100 mm (3.94 in), the shield of the power connection cable can be connected to the integrated shield connection plate by means of a shield connection terminal or hose clip, e.g. Weidmüller type KLBÜ CO 4. The shield connection terminal must not be used as a strain relief mechanism. Shield connection sets are available for the 150 mm (5.91 in), 200 mm (7.87 in) and 300 mm (11.81 in) wide Active Line Modules.

The signal cable shield can be connected to the Active Line Module by means of a shield connection clamp, e.g. Weidmüller type KLBÜ 3-8 SC.

The scope of supply of the Active Line Modules includes:

- DRIVE-CLiQ cable for connection to the adjacent Control Unit on the left for drive control, length 0.11 m (4.33 in)
- DRIVE-CLiQ cable (length depends on Active Line Module width) for connection to the adjacent Motor Module, length = width of Active Line Module + 0.11 m (4.33 in)
- 2 blanking plugs for sealing unused DRIVE-CLiQ sockets
- Jumper for connecting the 24 V DC busbar to the adjacent Motor Module
- 24 V terminal adapter (X24)
- Connector X21 for digital inputs
- Fan insert for Active Line Modules of 80 kW (100 hp) and 120 kW (150 hp) (the voltage for the fan unit is supplied by the Active Line Module)
- 1 set of warning labels in 30 languages

© Siemens AG 2017

Integration

The Active Line Module receives its control information via DRIVE-CLiQ from:

- CU320-2 Control Unit
- SINUMERIK 840D sl with
  - NCU 710.3B PN
  - NCU 720.3B PN
  - NCU 730.3B PN
  - Numeric Control Extensions NX10.3/NX15.3
- SIMOTION D

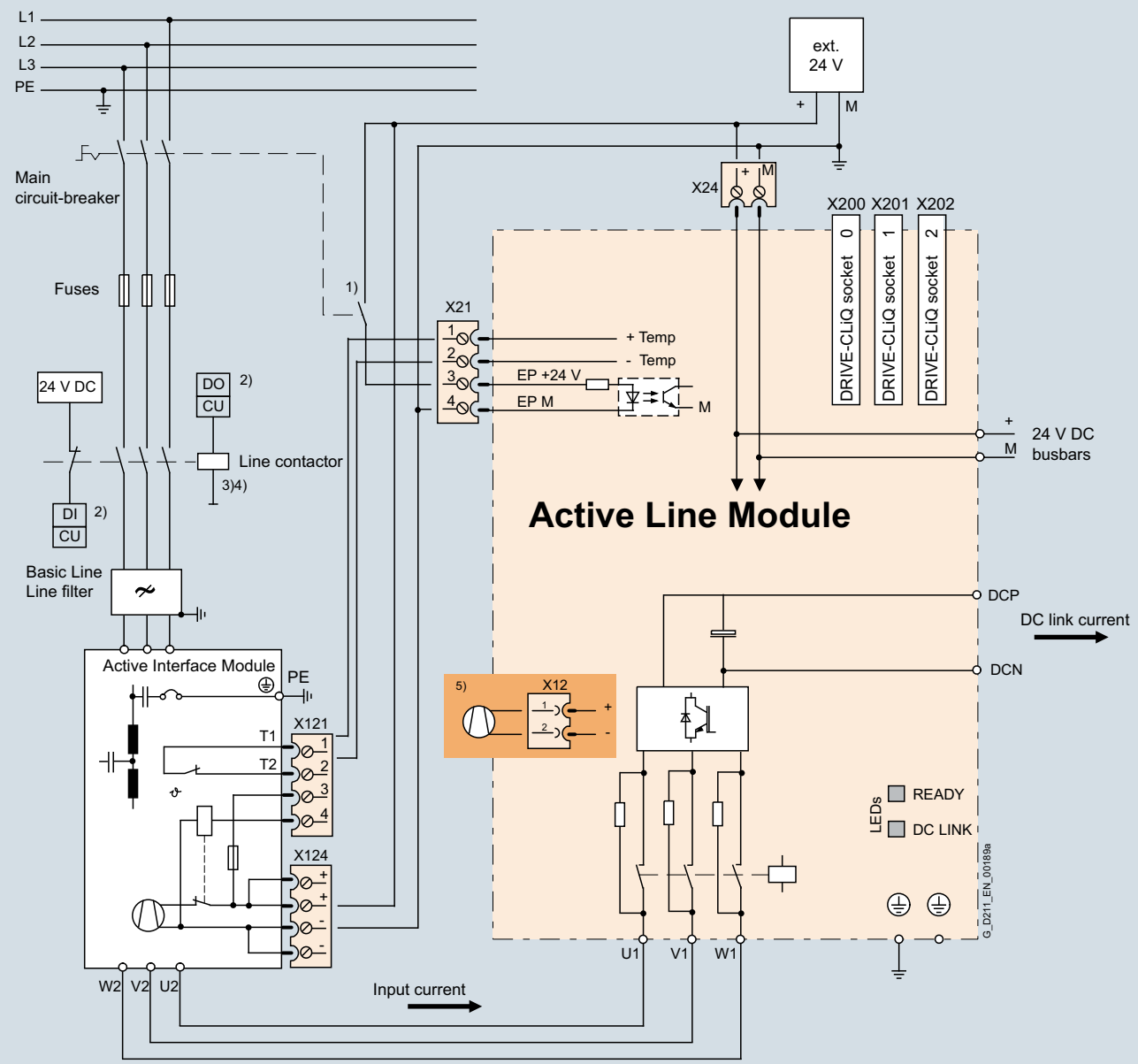

1) Leading NC contact t > 10 ms, 24 V DC and ground must be connected for operation.
2) Digital input (DI) or digital output (DO), controlled by the Control Unit.
3) No additional load permitted downstream of the line contactor.
4) The current carrying capacity of the digital output (DO) must be taken into account; an output interface element may have to be used.
5) Fan insert for Active Line Module of 80 kW (100 hp) and 120 kW (150 hp). The fan insert is supplied with the Active Line Module.

Connection example of Active Line Module in booksize format

© Siemens AG 2017

Selection and ordering data

Rated power kW (hp)	**Active Line Module in booksize format** Article No.
Line voltage 380 ... 480 V 3 AC	
16 (18)	**6SL3130-7TE21-6AA4**
36 (40)	**6SL3130-7TE23-6AA3**
55 (60)	**6SL3130-7TE25-5AA3**
80 (100)	**6SL3130-7TE28-0AA3**
120 (150)	**6SL3130-7TE31-2AA3**

Description	Article No.
Accessories	
Shield connection plate For Line Modules and Motor Modules in booksize format with a width of	
• 150 mm (5.91 in)	**6SL3162-1AF00-0AA1**
• 200 mm (7.87 in)	**6SL3162-1AH01-0AA0**
• 300 mm (11.81 in)	**6SL3162-1AH00-0AA0**
DC link rectifier adapter For direct infeed of DC link voltage	
• Screw-type terminals 0.5 ... 10 mm^2 For Line Modules and Motor Modules in booksize format with a width of 50 mm (1.97 in), 75 mm (2.95 in) and 100 mm (3.94 in)	**6SL3162-2BD00-0AA0**
• Screw-type terminals 35 ... 95 mm^2 For Line Modules and Motor Modules in booksize format with a width of 150 mm (5.91 in), 200 mm (7.87 in) and 300 mm (11.81 in)	**6SL3162-2BM00-0AA0**
DC link adapter (2 units) For multi-tier configuration Screw-type terminals 35 ... 95 mm^2 For all Line Modules and Motor Modules in booksize format	**6SL3162-2BM01-0AA0**
Accessories for re-ordering	
24 V terminal adapter For all Line Modules and Motor Modules in booksize format	**6SL3162-2AA00-0AA0**
24 V jumper For connection of the 24 V busbars (for booksize format)	**6SL3162-2AA01-0AA0**
Terminal Kit (Plug-in terminals, DRIVE-CLiQ jumper (length = module width + 60 mm (2.36 in)), dust protection blanking plugs) For DRIVE-CLiQ port For Active Line Modules with a width of	
• 100 mm (3.94 in)	**6SL3163-8FD00-0AA0**
• 150 mm (5.91 in)	**6SL3163-8GF00-0AA0**
• 200 mm (7.87 in)	**6SL3163-8HH00-0AA0**
• 300 mm (11.8 in)	**6SL3163-8JM00-0AA0**
Warning labels in 30 languages This label set can be glued over the standard German or English labels to provide warnings in other languages. One set of labels is supplied with the devices. One sign in each of the following languages is provided in each set: BG, CN, CZ, DE, DK, EE, ES, FI, FR, GB, GR, HU, IE, IS, IT, JP, KR, LT, LV, MT, NL, NO, PL, PT, RO, RU, SE, SI, SK, TR	**6SL3166-3AB00-0AA0**
Dust protection blanking plugs (50 units) For DRIVE-CLiQ port	**6SL3066-4CA00-0AA0**

Technical specifications

	Active Line Module in booksize format 6SL3130-7TE...
Line voltage (up to 2000 m (6562 ft) above sea level)	380 ... 480 V 3 AC ±10 % (in operation -15 % <1 min)
Line frequency	47 ... 63 Hz
SCCR **(short-circuit current rating)**	65 kA in conjunction with the recommended Class J fuse, or circuit breaker according to UL489 / CSA 22.2 No. 5-02 see recommended line-side components
Line power factor	
• Active mode	
- Fundamental power factor (cos φ_1)	1 (factory setting), can be altered by inputting a reactive current setpoint
- Total (λ)	1 (factory setting)
• Smart Mode	
- Fundamental power factor	>0.96
- Overall	0.65 ... 0.9
Overvoltage category to EN 60664-1	Class III
DC link voltage V_d	In Active Mode, the DC link voltage is regulated and can be adjusted as a voltage decoupled from the line voltage. In Smart Mode, the DC link voltage is kept in proportion to the line voltage at the mean rectified line voltage value. Factory setting for DC link voltage: 380 ... 400 V 3 AC: 600 V (Active Mode) 400 ... 415 V 3 AC: 625 V (Active Mode) 416 ... 480 V 3 AC: 1.35 × line voltage (Smart Mode) [1]
Electronics power supply	24 V DC -15 %/+20 %
Radio interference suppression	
• Standard (Active Line Module + Active Interface Module)	Category C3 to EN 61800-3 up to 350 m (1148 ft) total cable length
• With line filter	Category C2 according to EN 61800-3 up to 350 m (1148 ft) total cable length Category C3 according to EN 61800-3 from 350 m to 1000 m (1148 ... 3281 ft) total cable length
Type of cooling	Internal air cooling (power units with increased air cooling by built-in fan)
Permissible ambient and coolant temperature (air) during operation for line-side components, Line Modules and Motor Modules	0 ... 40 °C (32 ... 104 °F) without derating, > 40 ... 55 °C (104 ... 131 °F), see derating characteristics
Installation altitude	Up to 1000 m (3281 ft) above sea level without derating, > 1000 ... 4000 m (3281 ... 13124 ft) above sea level, see derating characteristics
Declarations of conformity	CE (Low Voltage and EMC Directives)
Certificate of suitability	cULus

[1] Active Mode can also be selected if the connected motors are suitable for > 650 V DC.

© Siemens AG 2017

Technical specifications (continued)

Line voltage 380 ... 480 V 3 AC		Active Line Module in booksize format				
Internal air cooling		6SL3130-7TE21-6AA4	6SL3130-7TE23-6AA3	6SL3130-7TE25-5AA3	6SL3130-7TE28-0AA3	6SL3130-7TE31-2AA3
Infeed/regenerative feedback power						
• Rated power P_{rated}						
- At 380 V 3 AC	kW	**16**	**36**	**55**	**80**	**120**
- At 460 V 3 AC [5]	(hp)	**(18)**	**(40)**	**(60)**	**(100)**	**(150)**
• For S6 duty P_{S6} (40 %)	kW	21	47	71	106	145
• P_{max}	kW	35	70	91 (122) [1])	131	175
DC link current						
• At 600 V DC	A	27	60	92	134	200
• For S6 duty (40 %)	A	35	79	121	176	244
• Maximum	A	59	117	152 (176 [1])	218	292
Input current						
• Rated current at 380/400/480 V 3 AC	A	26/25/21	58/55/46	88/84/70	128/122/102	192/182/152
• For S6 duty (40 %) at 400 V	A	32	71	108	161	220
• At 400 V max.	A	54	107	139 (168 [1])	200	267
Current requirement 24 V DC electronics power supply, max.	A	1.1	1.5	1.9	2	2.5
Current carrying capacity						
• 24 V DC busbars	A	20	20	20	20	20
• DC link busbars	A	100	200	200	200	200
DC link capacitance						
• Active Line Module	µF	710	1410	1880	2820	3995
• Drive line-up, max.	µF	20000	20000	20000	20000	20000
Power loss [2]	kW	0.28	0.67	0.95	1.38	2.24
Cooling air requirement	m^3/s (ft^3/s)	0.016 (0.57)	0.031 (1.09)	0.044 (0.155)	0.144 (4.1)	0.144 (4.1)
Sound pressure level L_{pA} (1 m)	dB	<60	<65	<60	<73	<73
Line connection U1, V1, W1		Screw-type terminals (X1)	M6 screw studs (X1)	M8 screw studs (X1)	M8 screw studs (X1)	M8 screw studs (X1)
• Conductor cross-section, max.	mm^2	2.5 ... 10	2.5 ... 50	2.5 ... 95, 2 × 35	2.5 ... 120, 2 × 50	2.5 ... 120, 2 × 50
Shield connection		Integrated in the connector	See Accessories	See Accessories	See Accessories	See Accessories
PE connection		M5 screw	M6 screw	M6 screw	M8 screw	M8 screw
Cable length, max. Total of all motor cables and DC link						
• Shielded	m (ft)	630 (2067) [3]	630 (2067) [3]	1000 (3281)	1000 (3281)	1000 (3281)
• Unshielded	m (ft)	850 (2789)	850 (2789)	1500 (4922)	1500 (4922)	1500 (4922)
Degree of protection		IP20	IP20	IP20	IP20	IP20
Dimensions						
• Width	mm (in)	100 (3.94)	150 (5.91)	200 (7.87)	300 (11.81)	300 (11.81)
• Height	mm (in)	380 (14.96)	380 (14.96)	380 (14.96)	380 (14.96)	380 (14.96)
- With fan [4]	mm (in)	–	–	–	629 (24.76)	629 (24.76)
• Depth	mm (in)	270 (10.63)	270 (10.63)	270 (10.63)	270 (10.63)	270 (10.63)
Weight, approx.	kg (lb)	7 (15.4)	10 (22.0)	17 (37.5)	23 (50.7)	23 (50.7)

[1] Higher peak output is possible in combination with the Active Interface Module 6SL3100-0BE25-5AB0 (for operating cycle constraints, see SINAMICS S120 Manual).

[2] Power loss of Active Line Module at rated output including losses of 24 V DC electronics power supply.

[3] Max. cable lengths in combination with Active Interface Module and Basic Line Filter (Category C3 according to EN 61800-3).

[4] The fan is supplied together with the Active Line Module and must be installed before the Active Line Module is commissioned.

[5] Nominal hp ratings are provided for ease of assigning components only. The Line Module outputs are dependent on the Motor Module loading and are to be dimensioned accordingly.

© Siemens AG 2017

Characteristic curves

Overload capability

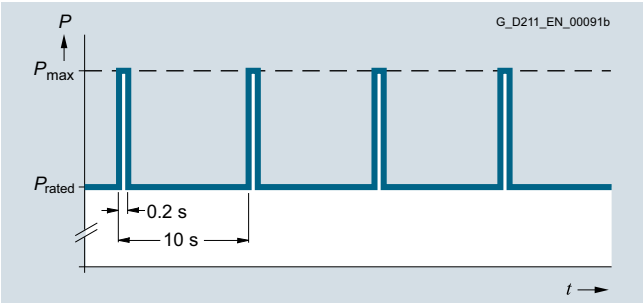

Duty cycle with previous load

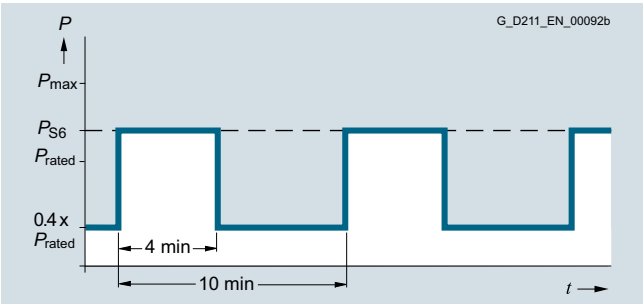

S6 duty cycle with previous load

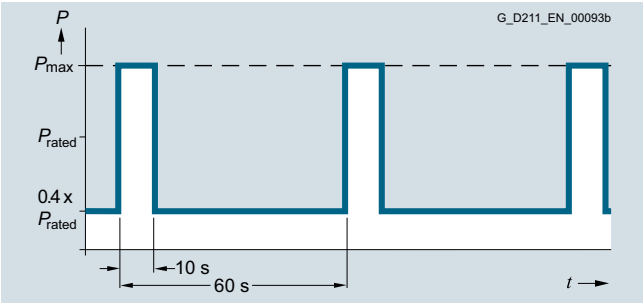

S6 duty cycle with previous load

55 kW (60 hp) Active Line Module only:

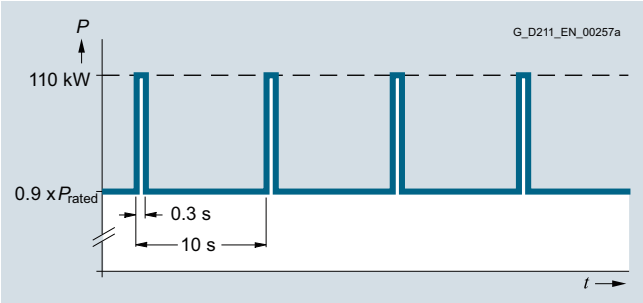

Peak power load duty cycle with previous load

Derating characteristics

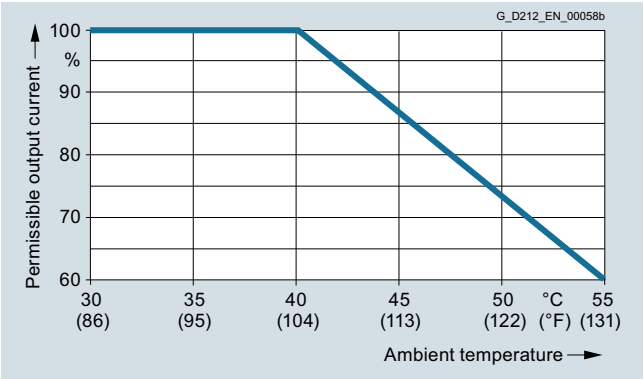

Output power as a function of ambient temperature

Installation altitude

- >1000 ... 4000 m (3281 ... 13124 ft) above sea level
  - Reduction of the output current by 10 % per 1000 m (3281 ft), or
  - Reduction of the ambient temperature by 5 °C (41 °F) per 1000 m (3281 ft)
- >2000 ... 4000 m (6562 ... 13124 ft) above sea level
  - Operation on line supply systems with grounded neutral point, or
  - Operation with an isolating transformer with secondary grounded neutral point

© Siemens AG 2017

Overview

Active Interface Modules for 16 kW, 36 kW, 55 kW and 80 kW/120 kW

The Active Interface Modules combine with the Active Line Modules to form a functional unit and are required for operation of the associated Active Line Module. The Active Interface Modules contain a Clean Power Filter and basic interference suppression to ensure compliance with Category C3 in accordance with EN 61800-3 with respect to emitted interference.

The Clean Power Filter protects the mains connection from switching-frequency harmonics. The drive system therefore draws a sinusoidal current from the supply and causes almost no harmonics.

The Active Line Modules in combination with the Active Interface Module can also be operated with supply systems with an isolated star point (IT supply systems).

Design

The scope of supply of the Active Interface Modules includes:

- Connector X21 for temperature evaluation and fan control
- Connector X24 for connecting the 24 V supply for the integrated fan
- DRIVE-CLiQ cable for connecting the Control Unit to the Active Interface Module; length of the DRIVE-CLiQ cable = width of the Active Interface Module + 0.11 m (4.33 in)
- Shield connection plate for Active Interface Module 16 kW
- 1 set of warning signs in 30 languages

Selection and ordering data

Rated power of the Active Line Module kW (hp)	Suitable for Active Line Module in booksize format	**Active Interface Module** Article No.
Line voltage 380 ... 480 V 3 AC		
16 (18)	6SL3130-7TE21-6AA4	**6SL3100-0BE21-6AB0**
36 (40)	6SL3130-7TE23-6AA3	**6SL3100-0BE23-6AB0**
55 (60)	6SL3130-7TE25-5AA3	**6SL3100-0BE25-5AB0**
80 (100)	6SL3130-7TE28-0AA3	**6SL3100-0BE28-0AB0**
120 (150)	6SL3130-7TE31-2AA3	**6SL3100-0BE31-2AB0**

Description	Article No.
Accessories	
Shield connection plate [1]	
• For Active Interface Module 36 kW (40 hp)	**6SL3163-1AF00-0AA0**
• For Active Interface Module 55 kW (60 hp)	**6SL3163-1AH00-0AA0**
• For Active Interface Module 80 kW (100 hp) and 120 kW (150 hp)	**6SL3163-1AM00-0AA0**
DRIVE-CLiQ cable, pre-assembled Degree of protection of connector IP20/IP20	
• For Active Interface Module 16 kW (18 hp), 0.31 m (1.02 ft) in length	**6SL3060-4AK00-0AA0**
• For Active Interface Module 36 kW (40 hp), 0.41 m (1.35 ft) in length	**6SL3060-4AP00-0AA0**
• For Active Interface Module 55 kW (60 hp), 0.6 m (1.97 ft) in length	**6SL3060-4AU00-0AA0**
• For Active Interface Module 80 kW (100 hp) and 120 kW (150 hp), 0.95 m (3.12 ft) in length	**6SL3060-4AA10-0AA0**
Accessories for re-ordering	
Terminal Kit (plug-in terminals, DRIVE-CLiQ jumper)	
• For Active Interface Module 16 kW (18 hp)	**6SL3160-8CD10-0AA0**
• For Active Interface Module 36 kW (40 hp)	**6SL3160-8DF10-0AA0**
• For Active Interface Module 55 kW (60 hp)	**6SL3160-8EH10-0AA0**
• For Active Interface Modules 80 kW (100 hp) and 120 kW (150 hp)	**6SL3160-8FM10-0AA0**
Warning labels in 30 languages This label set can be glued over the standard German or English labels to provide warnings in other languages. One set of labels is supplied with the devices. One sign in each of the following languages is provided in each set: BG, CN, CZ, DE, DK, EE, ES, FI, FR, GB, GR, HU, IE, IS, IT, JP, KR, LT, LV, MT, NL, NO, PL, PT, RO, RU, SE, SI, SK, TR	**6SL3166-3AB00-0AA0**

[1] For Active Interface Module 16 kW, included in scope of supply.

© Siemens AG 2017

Integration

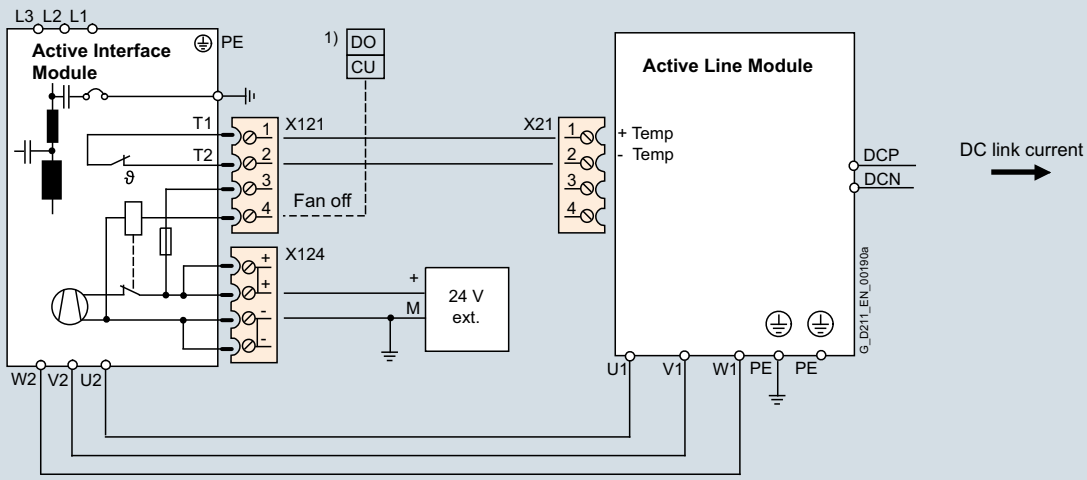

1) Digital input (DI) or digital output (DO), controlled via Control Unit.

Connection example for Active Interface Module

The Active Interface Module requires a 24 V DC supply for operation of the integral fan.
The fan rotates after the 24 V DC supply is applied and can, if necessary (service life, noise), be disconnected from the Control Unit over the "Fan off" input. It is only permitted to switch off the fan when the infeed of the drive system is not operating, otherwise the Active Interface Module will overheat.

The thermostatic switch installed in the Active Interface Module is evaluated over the connected Active Line Module.

The power cables between the Active Interface Module and Active Line Module must be shielded if limit values for interference suppression are to be complied with. The cable shield can be routed over the shield connection plate (option) to the Active Interface Module or Active Line Module.

Depending on the position of the Active Interface Module in the drive system, additional DRIVE-CLiQ cables may be required. If it is separately installed next to the left side of the Control Unit and Active Line Module, no additional DRIVE-CLiQ cables are required. If the Active Interface Module is placed between the Control Unit and Active Line Module, the DRIVE-CLiQ cables supplied with the Active Line Modules are suitable for setting up a line topology, i.e. Active Line Module and all Motor Modules in series on one DRIVE-CLiQ line. If the Active Line Module is connected over a separate DRIVE-CLiQ line, the DRIVE-CLiQ cable marked with (1) must be ordered. A DRIVE-CLiQ cable suitable for connection (2) is included in the scope of supply of the Active Line Module.

For DRIVE-CLiQ cables for different configurations, see section MOTION-CONNECT connection systems.

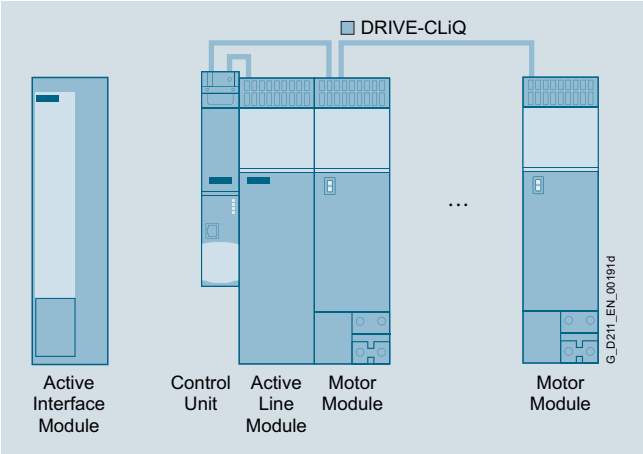

Separate Active Interface Module

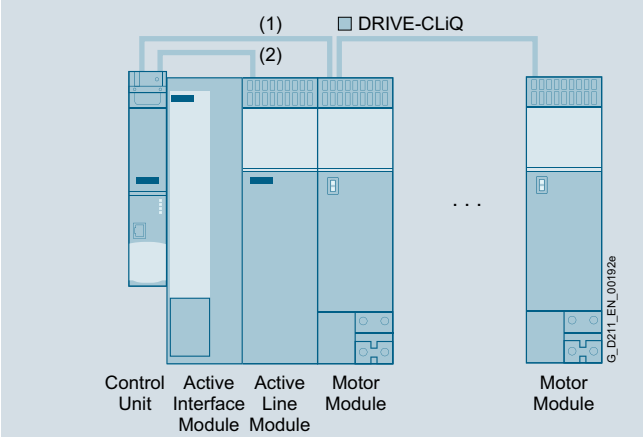

(1) DRIVE-CLiQ cable between Control Unit and Motor Module

Active Interface Module 16 kW:	0.31 m
Active Interface Module 36 kW:	0.41 m
Active Interface Module 55 kW:	0.60 m
Active Interface Module 80 kW and 120 kW:	0.95 m

(2) Included in scope of supply of Active Line Modules

Active Interface Module integrated in the drive line-up

© Siemens AG 2017

Technical specifications

Line voltage 380 ... 480 V 3 AC		**Active Interface Module**				
Internal air cooling		6SL3100-0BE21-6AB0	6SL3100-0BE23-6AB0	6SL3100-0BE25-5AB0	6SL3100-0BE28-0AB0	6SL3100-0BE31-2AB0
Rated current	A	26	58	88	128	192
Current requirement 24 V DC electronics power supply, max.	A	0.25	0.49	0.6	1.2	1.2
Internal resistance Digital input "Fan off" (X21/Pin 4)	Ω	1440 ±10 %	1440 ±10 %	1440 ±10 %	1440 ±10 %	1440 ±10 %
Power loss	kW	0.27	0.34	0.38	0.49	0.585
Cooling air requirement	m^3/s (ft^3/s)	0.03 (1.1)	0.04 (1.4)	0.083 (2.9)	0.167 (5.9)	0.167 (5.9)
Sound pressure level L_{pA} (1 m)	dB	57	60	66	68	68
Line supply/load connection L1, L2, L3/U2, V2, W2		Connector	Screw terminals	Screw terminals	M8 screw studs	M8 screw studs
• Conductor cross-section	mm^2	16	50	50	2.5 … 120 or 2 × 50	2.5 … 120 or 2 × 50
Thermostatic switch (NC contact)						
• Switching capacity		250 V AC/1.6 A 60 V DC/0.75 A	250 V AC/1.6 A 60 V DC/0.75 A	250 V AC/1.6 A 60 V DC/0.75 A	250 V AC/1.6 A 60 V DC/0.75 A	250 V AC/1.6 A 60 V DC/0.75 A
PE connection		M5 screw	M6 screw	M6 screw	M8 screw	M8 screw
Degree of protection		IP20	IP20	IP20	IP20	IP20
Dimensions						
• Width	mm (in)	100 (3.94)	150 (5.91)	200 (7.87)	300 (11.81)	300 (11.81)
• Height	mm (in)	380 (14.96)	380 (14.96)	380 (14.96)	380 (14.96)	380 (14.96)
• Depth	mm (in)	270 (10.63)	270 (10.63)	270 (10.63)	270 (10.63)	270 (10.63)
Weight, approx.	kg (lb)	11.6 (25.6)	19 (41.9)	23.2 (51.2)	31.9 (70.3)	36.6 (80.7)
Certificate of suitability		cURus	cURus	cURus	cURus	cURus
Suitable for Active Line Module in booksize format	Type	6SL3130-7TE21-6AA4	6SL3130-7TE23-6AA3	6SL3130-7TE25-5AA3	6SL3130-7TE28-0AA3	6SL3130-7TE31-2AA3
• Rated power of the Active Line Module	kW (hp)	16 (18)	36 (40)	55 (60)	80 (100)	120 (150)

© Siemens AG 2017

Characteristic curves

Overload capability

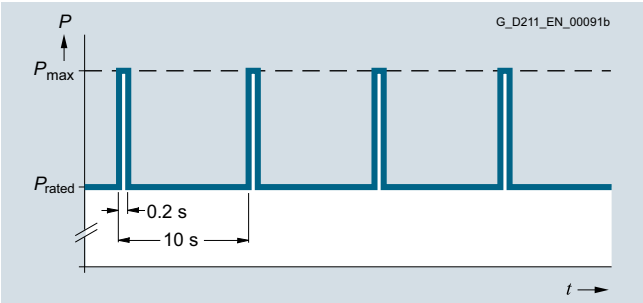

Duty cycle with previous load

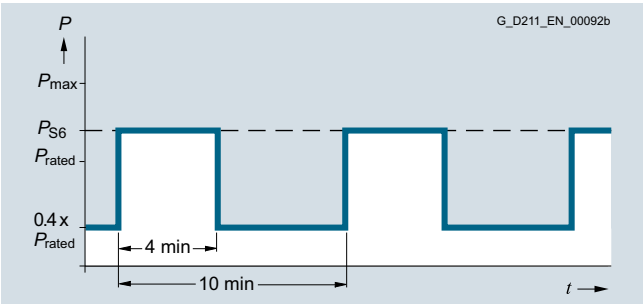

S6 duty cycle with previous load

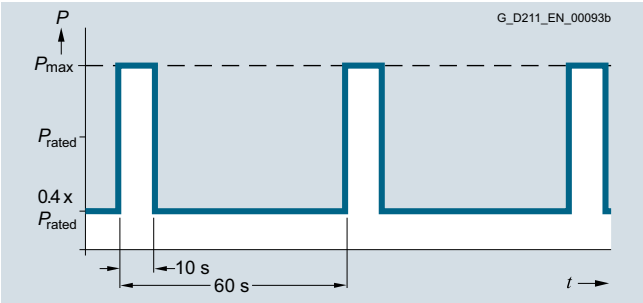

S6 duty cycle with previous load

55 kW (60 hp) Active Line Module only:

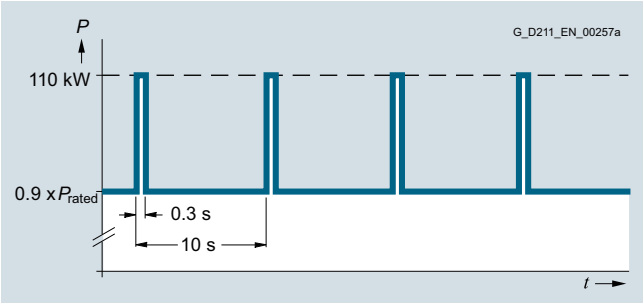

Peak power load duty cycle with previous load

Derating characteristics

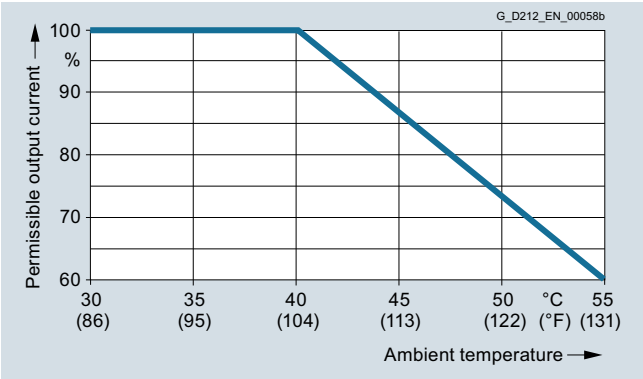

Output power as a function of ambient temperature

Installation altitude

- >1000 ... 4000 m (3281 ... 13124 ft) above sea level
  - Reduction of the output current by 10 % per 1000 m (3281 ft), or
  - Reduction of the ambient temperature by 5 °C (41 °F) per 1000 m (3281 ft)
- >2000 ... 4000 m (6562 ... 13124 ft) above sea level
  - Operation on line supply systems with grounded neutral point, or
  - Operation with an isolating transformer with secondary grounded neutral point

© Siemens AG 2017

Overview

In conjunction with Active Interface Modules and a logically consistent configuration of the plant or system, line filters limit the interference conducted by the power modules to the limit values of Category C2 acc. to EN 61800-3. Line filters are only suitable for direct connection to TN line systems.

Note:

According to product standard EN 61800-3, RFI suppression commensurate with the relevant rated conditions must be provided and is a legal requirement in the EU (EMC Directive). Line filters and line reactors are required for this purpose. The use of line filters of other makes can lead to limit value violations, resonance, overvoltages and irreparable damage to motors or other equipment. The machine manufacturer must provide verification that the machinery to be operated with the drive products and the installed suppression elements, e.g. line filters, are CE-EMC-compliant.

Optional Basic Line Filters that are coordinated with the power ranges in booksize format are available for the SINAMICS S120 drive system.

Basic Line Filter

Basic Line Filter

With the Basic Line Filters in combination with the Active Interface Modules, the limits for the interference voltages can be extended to Category C2 (EN 61800-3) or, retaining Category C3, longer total cable lengths are possible for the configuration.

Basic Line Filters are used on machines on which conducted interference emissions in the frequency range between 150 kHz and 30 MHz need to be damped in accordance with the requirements of CE-EMC legislation.

Selection and ordering data

Rated power of the Active Line Module kW (hp)	Suitable for Active Line Module in booksize format	**Basic Line Filter** Article No.
16 (18)	6SL3130-7TE21-6AA4	**6SL3000-0BE21-6DA0**
36 (40)	6SL3130-7TE23-6AA3	**6SL3000-0BE23-6DA1**
55 (60)	6SL3130-7TE25-5AA3	**6SL3000-0BE25-5DA0**
80 (100)	6SL3130-7TE28-0AA3	**6SL3000-0BE28-0DA0**
120 (150)	6SL3130-7TE31-2AA3	**6SL3000-0BE31-2DA0**

Technical specifications

Line voltage 380 ... 480 V 3 AC		**Basic Line Filter**				
		6SL3000-0BE21-6DA0	6SL3000-0BE23-6DA1	6SL3000-0BE25-5DA0	6SL3000-0BE28-0DA0	6SL3000-0BE31-2DA0
Rated current	A	36	74	105	132	192
Power loss	kW	0.016	0.02	0.043	0.056	0.073
Line supply/load connection L1, L2, L3 / U, V, W		Screw terminals	Screw terminals	Screw terminals	Screw terminals	Screw terminals
• Conductor cross-section	mm^2	10	35	50	95	95
PE connection		M6 screw studs according to DIN 46234	M6 screw studs according to DIN 46234	M8 screw studs according to DIN 46234	M10 screw studs according to DIN 46234	M10 screw studs according to DIN 46234
Degree of protection		IP20	IP20	IP20	IP20	IP20
Dimensions						
• Width	mm (in)	50 (1.97)	75 (2.95)	100 (3.94)	150 (5.91)	150 (5.91)
• Height	mm (in)	429 (16.89)	433 (17.05)	466 (18.35)	479 (18.86)	479 (18.86)
• Depth	mm (in)	226 (8.90)	226 (8.90)	226 (8.90)	226 (8.90)	226 (8.90)
Weight, approx.	kg (lb)	5 (11.0)	7.5 (16.5)	11.5 (25.4)	17.5 (38.6)	18.5 (40.8)
Certificate of suitability		cURus	cURus	cURus	cURus	cURus
Suitable for Active Line Module in booksize format	Type	6SL3130-7TE21-6AA4	6SL3130-7TE23-6AA3	6SL3130-7TE25-5AA3	6SL3130-7TE28-0AA3	6SL3130-7TE31-2AA3
• Rated power of the Active Line Module	kW (hp)	16 (18)	36 (40)	55 (60)	80 (100)	120 (150)

© Siemens AG 2017

Selection and ordering data

Suitable line-side power components are assigned depending on the power rating of the Active Line Modules.

The tables below list recommended components.

Additional information about the line-side power components can be found in Catalogs LV 10, IC 10 and IC 10 AO as well as the Industry Mall.

Assignment of line-side power components to Active Line Modules in booksize format

Rated power	Suitable for Active Line Module in booksize format	**Line contactor**	**Output coupling device for line contactor**	**Main switch**	**Leading auxiliary switch for main switch**
kW (hp)	6SL3130-...	Type	Article No.	Article No.	Article No.
16 (18)	7TE21-6AA4	**3RT1035**	**3TX7004-1LB00**	**3LD2504-0TK51**	**3LD9200-5B**
36 (40)	7TE23-6AA3	**3RT1045**	**3TX7004-1LB00**	**3LD2704-0TK51**	**3LD9200-5B**
55 (60)	7TE25-5AA3	**3RT1054**	**3TX7004-1LB00**	**3KA5330-1GE01**	**3KX3552-3EA01**
80 (100)	7TE28-0AA3	**3RT1056**	**3TX7004-1LB00**	**3KA5330-1GE01**	**3KX3552-3EA01**
120 (150)	7TE31-2AA3	**3RT1065**	**3TX7004-1LB00**	**3KA5730-1GE01**	**3KX3552-3EA01**

Rated power	Suitable for Active Line Module in booksize format	**Circuit breaker IEC 60947**	**Circuit breaker UL489/CSA C22.2 No. 5-02**	**Fuse switch disconnector**	**Switch disconnector with fuse holders**	**Leading auxiliary switch for switch disconnector with fuse holders**
kW (hp)	6SL3130-...	Article No.	Article No.	Article No.	Article No.	Article No.
16 (18)	7TE21-6AA4	**3RV1031-4FA10**	**3VL1135-2KM30-....** *)	**3NP1123-1CA20**	**3KL5230-1GB01**	**3KX3552-3EA01**
36 (40)	7TE23-6AA3	**3RV1041-4LA10**	**3VL2508-2KN30-....** *)	**3NP1123-1CA20**	**3KL5230-1GB01**	**3KX3552-3EA01**
55 (60)	7TE25-5AA3	**3VL2712-1DC33-....** *)	**3VL2512-2KN30-....** *)	**3NP1143-1DA20**	**3KL5530-1GB01**	**3KX3552-3EA01**
80 (100)	7TE28-0AA3	**3VL3720-1DC33-....** *)	**3VL3117-2KN30-....** *)	**3NP1143-1DA20**	**3KL5530-1GB01**	**3KX3552-3EA01**
120 (150)	7TE31-2AA3	**3VL3725-1DC36-....** *)	**3VL3125-2KN30-....** *)	**3NP1153-1DA20**	**3KL5730-1GB01**	**3KX3552-3EA01**

Rated power	Suitable for Active Line Module in booksize format	**NEOZED fuse (gL/gG)**			**DIAZED fuse (gL/gG)**			**LV HRC fuse (gL/gG)**			**UL/CSA fuse, Class J** [1] Available from: Mersen www.ep.mersen.com		
kW (hp)	6SL3130-...	Rated current	Size	Article No.	Rated current	Size	Article No.	Rated current	Size	Article No.	Rated current	Size mm (in)	Reference No.
16 (18)	7TE21-6AA4	35 A	D02	**5SE2335**	35 A	DIII	**5SB411**	35 A	000	**3NA3814**	35 A	27 × 60 (1.06 × 2.36)	AJT35
36 (40)	7TE23-6AA3	–	–	–	80 A	DIV	**5SC211**	80 A	000	**3NA3824**	80 A	29 × 117 (1.14 x 4.61)	AJT80
55 (60)	7TE25-5AA3	–	–	–	–	–	–	125 A	1	**3NA3132**	125 A	41 × 146 (1.61 x 5.75)	AJT125
80 (100)	7TE28-0AA3	–	–	–	–	–	–	160 A	1	**3NA3136**	175 A	41 × 146 (1.61 x 5.75)	AJT175
120 (150)	7TE31-2AA3	–	–	–	–	–	–	250 A	1	**3NA3144**	250 A	54 × 181 (2.13 x 7.13)	AJT250

[1] Not suitable for 3NP and 3KL switch disconnectors.

*) See Catalog LV 10 for Article No. supplements.

© Siemens AG 2017

Overview

Smart Line Module in booksize compact format

Smart Line Modules are stall-protected, line-commutated infeed/regenerative feedback units (diode bridge for incoming supply; stall-protected, line-commutated regenerative feedback via IGBTs) with 100 % continuous regenerative feedback power. The regenerative capability of the modules can be deactivated by means of parameterization. Smart Line Modules are designed for connection to grounded TN/TT systems and non-grounded IT systems.

The DC link is pre-charged via integrated precharging resistors.

The associated line reactor is required for operating a Smart Line Module.

Design

The Smart Line Modules in booksize compact format feature the following connections and interfaces as standard:

- 1 power connection via screw-type terminals
- 1 connection for the 24 V DC electronics power supply via the 24 V terminal adapter included in the scope of supply
- 1 DC link connection via integrated DC link busbars
- 2 PE (protective earth) connections
- 3 DRIVE-CLiQ sockets

The status of the Smart Line Modules is indicated via two multi-color LEDs.

The signal cable shield can be connected to the Line Module by means of a shield connection terminal, e.g. Weidmüller type KLBÜ 3-8 SC.

The scope of supply of the Smart Line Modules includes:

- DRIVE-CLiQ cable for connection to the adjacent Control Unit on the left for drive control, length 0.11 m (4.33 in)
- 2 blanking plugs for sealing unused DRIVE-CLiQ sockets
- DRIVE-CLiQ cable for connecting to the adjacent Motor Module, length 0.21 m (8.3 in)
- Jumper for connecting the 24 V DC busbar to the adjacent Motor Module
- 24 V terminal adapter (X24)
- Connector X21 for digital inputs/outputs
- 1 set of warning signs in 30 languages
- 1 heat conducting foil

Selection and ordering data

Rated power kW (hp)	**Smart Line Module in booksize compact format** Article No.
Line voltage 380 ... 480 V 3 AC	
16 (18)	**6SL3430-6TE21-6AA1**

Description	Article No.
Accessories	
DC link rectifier adapter For direct infeed of DC link voltage Screw-type terminals 0.5 ... 10 mm^2 For Line Modules and Motor Modules in booksize format with a width of 50 mm (1.97 in), 75 mm (2.95 in) and 100 mm (3.94 in)	**6SL3162-2BD00-0AA0**
DC link adapter (2 units) For multi-tier configuration Screw-type terminals 35 ... 95 mm^2 For all Line Modules and Motor Modules in booksize format	**6SL3162-2BM01-0AA0**
Accessories for re-ordering	
24 V terminal adapter For all Line Modules and Motor Modules in booksize format	**6SL3162-2AA00-0AA0**
24 V jumper For connection of the 24 V busbars (for booksize format)	**6SL3162-2AA01-0AA0**
Warning labels in 30 languages This label set can be glued over the standard German or English labels to provide warnings in other languages. One set of labels is supplied with the devices. One sign in each of the following languages is provided in each set: BG, CN, CZ, DE, DK, EE, ES, FI, FR, GB, GR, HU, IE, IS, IT, JP, KR, LT, LV, MT, NL, NO, PL, PT, RO, RU, SE, SI, SK, TR	**6SL3166-3AB00-0AA0**
Dust protection blanking plugs (50 units) For DRIVE-CLiQ port	**6SL3066-4CA00-0AA0**

© Siemens AG 2017

Integration

The Smart Line Module receives its control information via DRIVE-CLiQ from:

- CU320-2 Control Unit
- SIMOTION D

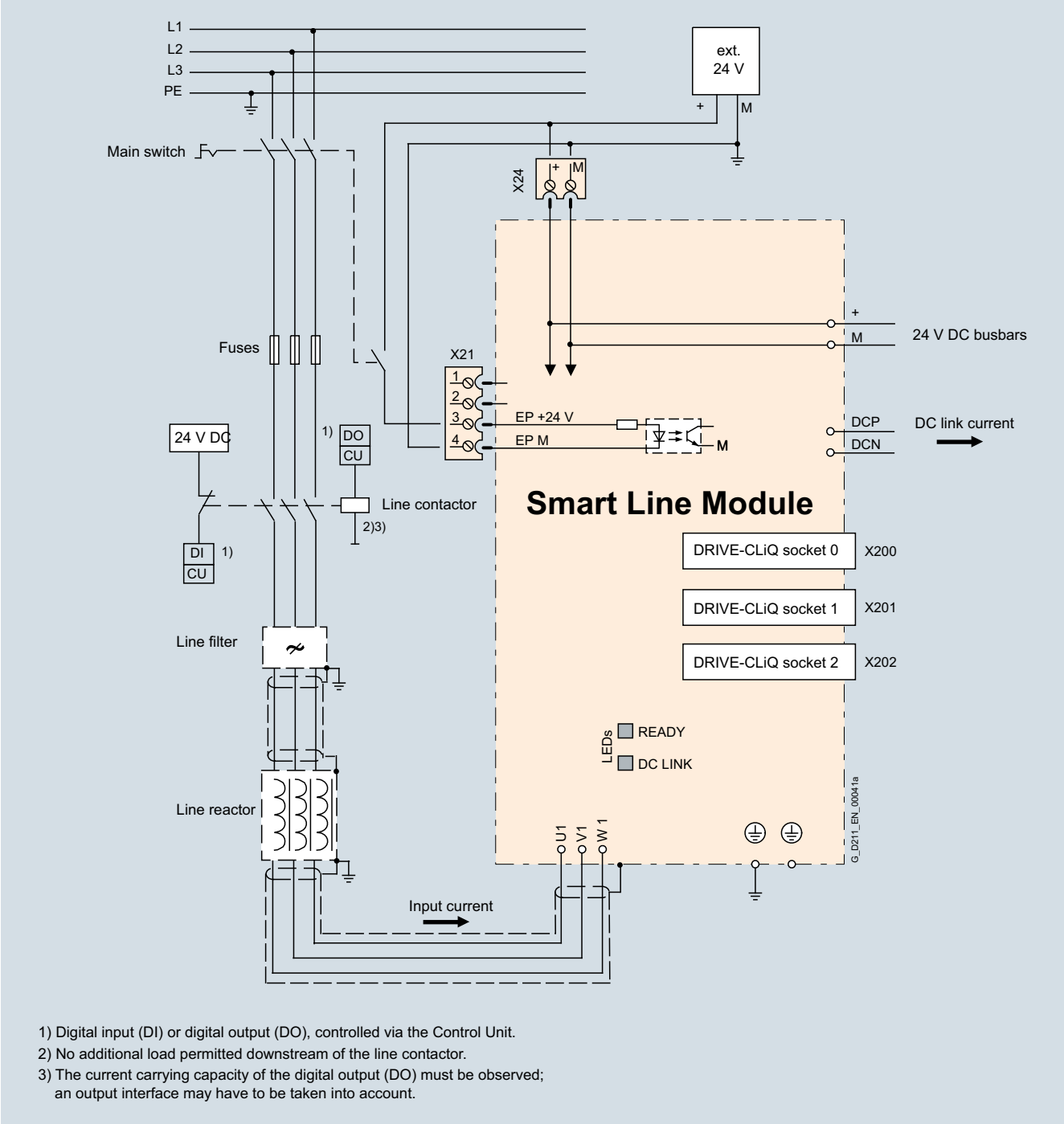

Connection example of Smart Line Module in booksize compact format

© Siemens AG 2017

Technical specifications

	Smart Line Module in booksize compact format 6SL3430-6TE21-6AA1
Line voltage (up to 2000 m (6562 ft) above sea level)	380 ... 480 V 3 AC ±10 % (in operation -15 % <1 min)
Line frequency	47 ... 63 Hz
SCCR (short-circuit current rating)	65 kA in conjunction with the recommended Class J fuse, or circuit breaker according to UL489 / CSA 22.2 No. 5-02 see recommended line-side components
Line power factor at rated power	
• Fundamental (cos φ_1)	>0.96
• Total (λ)	0.65 ... 0.9
Overvoltage category according to EN 60664-1	Class III
DC link voltage, approx.	1.35 × line voltage [1]
Electronics power supply	24 V DC, -15 %/+20 %
Radio interference suppression	
• Standard	No radio interference suppression
• With line filter	Category C2 to EN 61800-3 Total cable length up to 350 m (1148 ft) (shielded)
Type of cooling	Internal air cooling (power units with increased air cooling by built-in fan)
Permissible ambient and coolant temperature (air) during operation for line-side components, Line Modules and Motor Modules	0 ... 40 °C (32 ... 104 °F) without derating, > 40 ... 55 °C (104 ... 131 °F), see derating characteristics
Installation altitude	Up to 1000 m (3281 ft) above sea level without derating, > 1000 ... 4000 m (3281 ... 13124 ft) above sea level, see derating characteristics
Declarations of conformity	CE (Low Voltage and EMC Directives)
Certificate of suitability	UL recognized

Line voltage 380 ... 480 V 3 AC	**Smart Line Module in booksize compact format**
Internal air cooling	6SL3430-6TE21-6AA1
Infeed/regenerative feedback power	
• Rated power P_{rated}	
- At 380 V 3 AC	**16 kW**
- At 460 V 3 AC [3]	**(18 hp)**
• For S6 duty (40 %) P_{S6}	21 kW
• P_{max}	35 kW
DC link current	
• At 600 V DC	27 A
• For S6 duty (40 %)	35 A
• Maximum	59 A
Input current	
• Rated current at 380 V 3 AC	29 A
• For S6 duty (40 %)	35 A
• Maximum	57.5 A
Current requirement 24 V DC electronics power supply, max.	1.1 A
Current carrying capacity	
• 24 V DC busbars	20 A
• DC link busbars	100 A
DC link capacitance	
• Smart Line Module	705 µF
• Drive line-up, max.	6000 µF
Power loss [2]	0.19 kW
Cooling air requirement	0.016 m^3/s
Sound pressure level L_{pA} (1 m)	<60 dB
Line connection U1, V1, W1	Screw-type terminals (X1)
• Conductor cross-section, max.	2.5 ... 10 mm^2
Shield connection	Cable shield connection plate integrated into the connector
PE connection	M5 screw
Cable length, max. (total of all motor cables and DC link)	
• Shielded	630 m (2067 ft)
• Unshielded	850 m (2788 ft)
Degree of protection	IP20
Dimensions	
• Width	100 mm (3.94 in)
• Height	270 mm (10.63 in)
• Depth	226 mm (8.90 in)
Weight, approx.	5.3 kg (11.7 lb)

[1] The DC link voltage is regulated to the mean value of the rectified line voltage. For further information, see section configuration notes.

[2] Power loss of Smart Line Module at rated output including losses of 24 V DC electronics power supply.

[3] Nominal hp ratings are provided for ease of assigning components only. The Line Module outputs are dependent on the Motor Module loading and are to be dimensioned accordingly.

© Siemens AG 2017

Characteristic curves

Overload capability

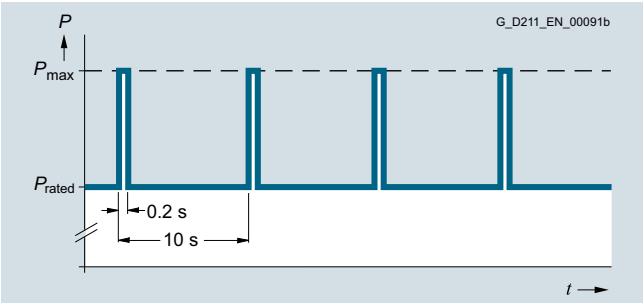

Duty cycle with previous load

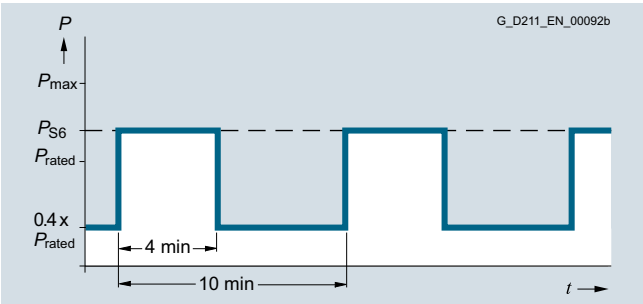

S6 duty cycle with previous load

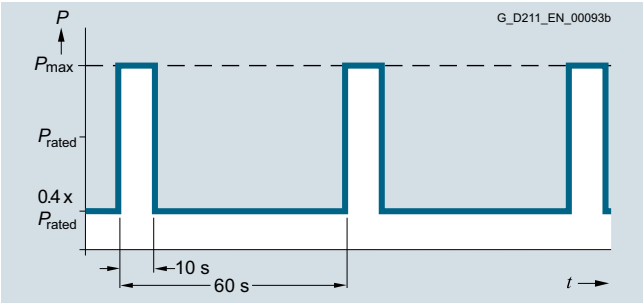

S6 duty cycle with previous load

Derating characteristics

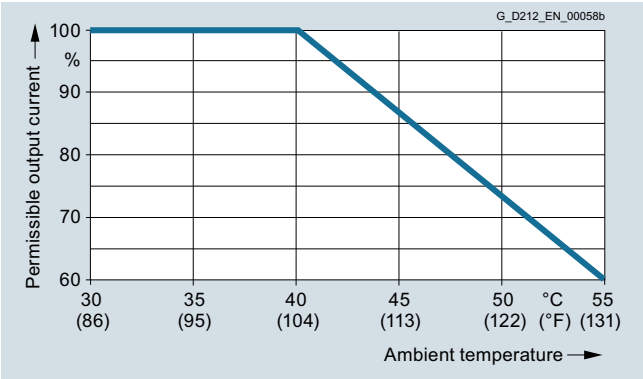

Output power as a function of ambient temperature

Installation altitude

- >1000 ... 4000 m (3281 ... 13124 ft) above sea level
  - Reduction of the output current by 10 % per 1000 m (3281 ft), or
  - Reduction of the ambient temperature by 5 °C (41 °F) per 1000 m (3281 ft)
- >2000 ... 4000 m (6562 ... 13124 ft) above sea level
  - Operation on line supply systems with grounded neutral point, or
  - Operation with an isolating transformer with secondary grounded neutral point

© Siemens AG 2017

Overview

Smart Line Modules are stall-protected, line-commutated in-feed/regenerative feedback units (diode bridge for incoming supply; stall-protected, line-commutated regenerative feedback via IGBTs) with 100 % continuous regenerative feedback power. The regenerative feedback capability of the modules can be deactivated by means of a digital input (Smart Line Modules 5 kW and 10 kW) or by means of parameterization (Smart Line Modules 16 kW, 36 kW and 55 kW). Smart Line Modules are designed for connection to grounded TN/TT systems and non-grounded IT systems.

The DC link is pre-charged via integrated precharging resistors.

The associated line reactor is required for operating a Smart Line Module.

Design

The Smart Line Modules in booksize format feature the following connections and interfaces as standard:

- 1 power connection via screw-type terminals
- 1 connection for the 24 V DC electronics power supply via the 24 V terminal adapter included in the scope of supply
- 1 DC link connection via integrated DC link busbars
- 2 PE (protective earth) connections
- 2 digital inputs
  (only for Smart Line Modules 5 kW (5 hp) and 10 kW (10 hp))
- 1 digital output
  (only for Smart Line Modules 5 kW (5 hp) and 10 kW (10 hp))
- 3 DRIVE-CLiQ sockets
  (only for Smart Line Modules 16 kW (18 hp), 36 kW (40 hp) and 55 kW (60 hp))
- 1 temperature sensor input for KTY84-130, Pt1000 or PTC
  (only for Smart Line Modules 16 kW (18 hp), 36 kW (40 hp) and 55 kW (60 hp), Pt1000 can be used from firmware V4.7 HF17)

The status of the Smart Line Modules is indicated via two multi-color LEDs.

The signal cable shield can be connected to the Line Module by means of a shield connection terminal, e.g. Weidmüller type KLBÜ 3-8 SC.

The scope of supply of the Smart Line Modules includes:

- DRIVE-CLiQ cable for connecting the module to the adjacent Control Unit on the left with the drive control, length 0.11 m (4.33 in) (only for Smart Line Modules 16 kW (18 hp), 36 kW (40 hp) and 55 kW (60 hp))
- 2 blanking plugs for closing unused DRIVE-CLiQ sockets
  (only for Smart Line Modules 16 kW (18 hp), 36 kW (40 hp) and 55 kW (60 hp))
- DRIVE-CLiQ cable (length depends on Smart Line Module width) for connection to the adjacent Motor Module,
  length = width of Smart Line Module + 0.11 m (4.33 in)
- Jumper for connecting the 24 V DC busbar to the adjacent Motor Module
- 24 V terminal adapter (X24)
- Connector X21 for digital inputs and outputs
- Connector X22 for digital inputs and outputs
  (only for Smart Line Modules 5 kW (5 hp) and 10 kW (10 hp))
- Connector X1 for line connection
  (only for Smart Line Modules 5 kW (5 hp) and 10 kW (10 hp))
- 1 set of warning labels in 30 languages

© Siemens AG 2017

Integration

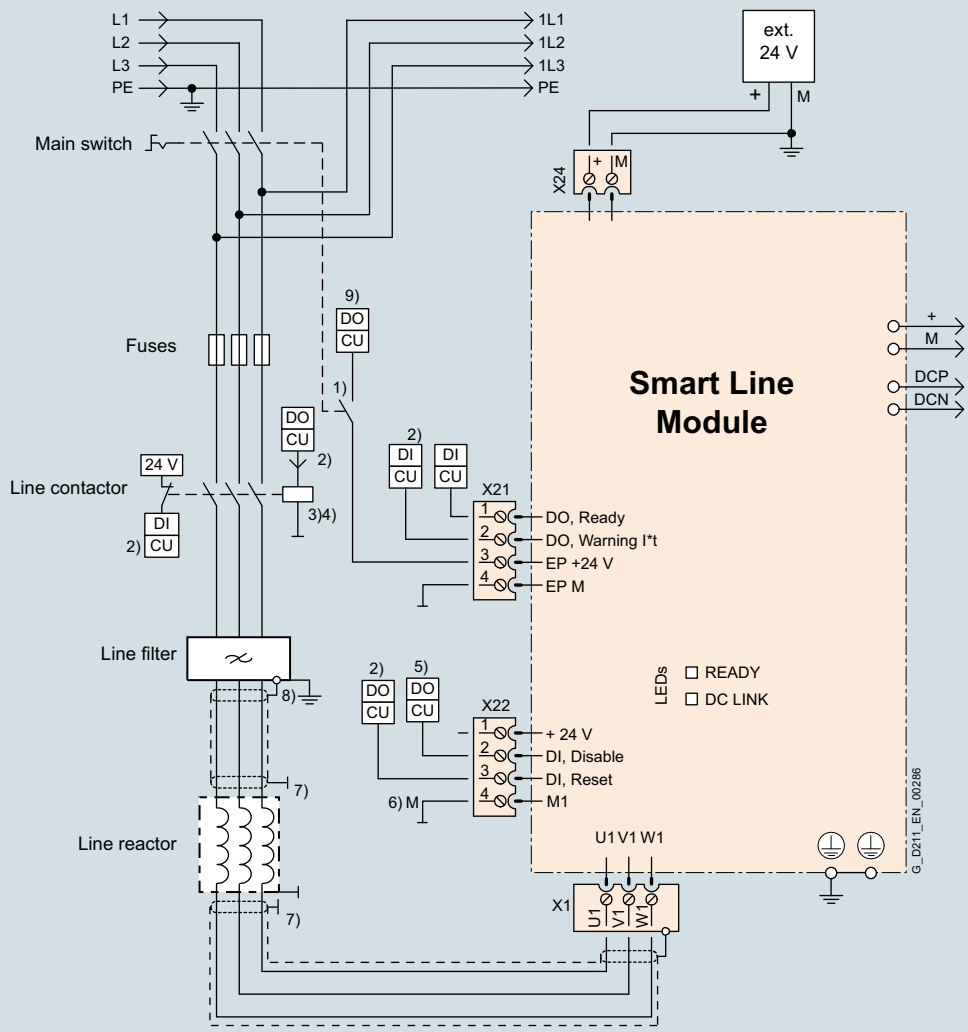

1) Leading NC contact t >10 ms, 24 V DC and ground must be connected for operation.
2) DI/DO, controlled by the Control Unit.
3) No additional load permitted downstream of the line contactor.
4) The current carrying capacity of the digital output (DO) must be taken into account; an output interface element may have to be used.
5) Digital output (DO) = High means: feedback deactivated (a jumper can be inserted between X22 pins 1 and 2 for permanent deactivation).
6) X22 pin 4 must be connected to ground (ext. 24 V).
7) Contacting via mounting back panel or shield panels according to EMC Installation Guidelines.
8) 5 kW and 10 kW line filters via shield connection
9) Signal output to prevent backlash of the DC 24 V supply on the EP terminal.

Connection example of 5 kW and 10 kW Smart Line Modules in booksize format

© Siemens AG 2017

Integration (continued)

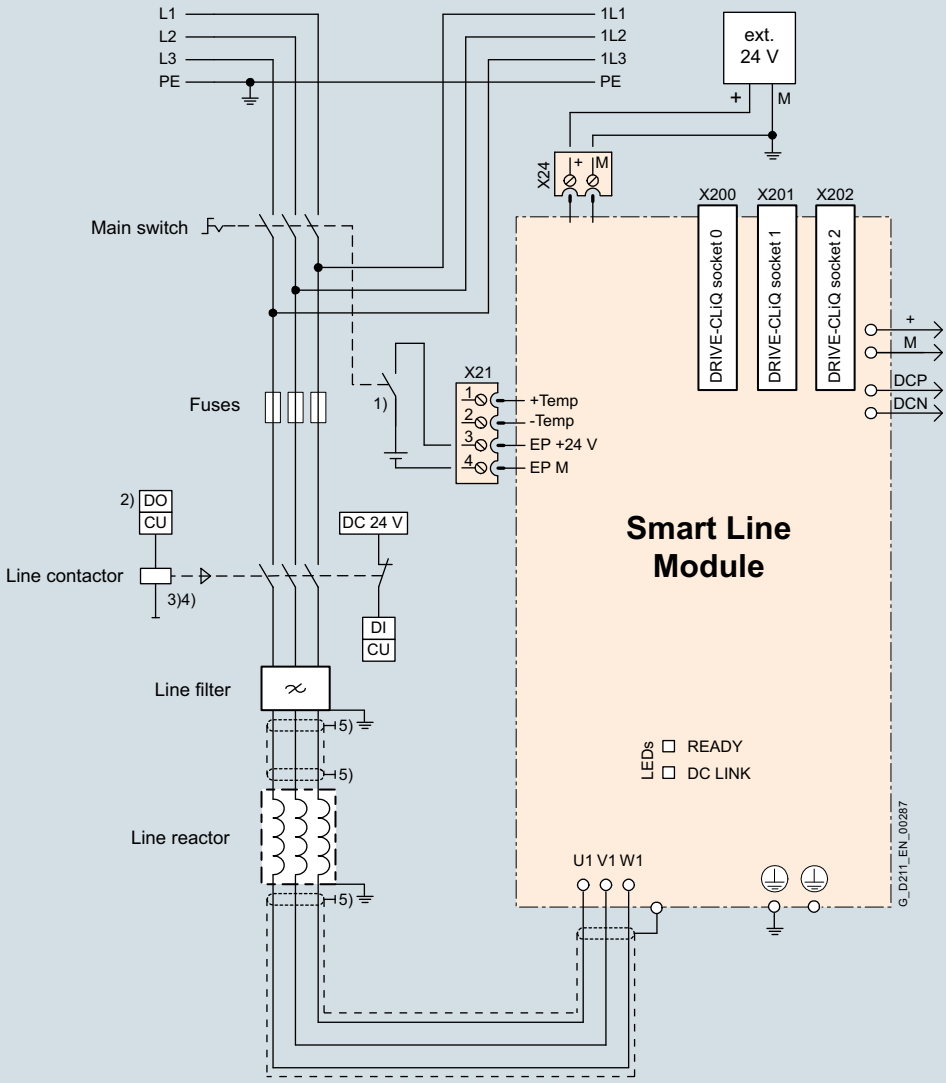

1) Leading NC contact *t* >10 ms.
2) DI/DO, controlled by the Control Unit.
3) No additional load permitted downstream of the line contactor.
4) The current carrying capacity of the digital output (DO) must be taken into account; an output interface element may have to be used.
5) Contacting via mounting back panel or shield panels according to EMC Installation Guidelines.

Connection example of 16 kW, 36 kW and 55 kW Smart Line Modules in booksize format

© Siemens AG 2017

Selection and ordering data

Rated power kW (hp)	**Smart Line Module in booksize format** Article No.
Line voltage 380 ... 480 V 3 AC	
5 (5)	**6SL3130-6AE15-0AB1**
10 (10)	**6SL3130-6AE21-0AB1**
16 (18)	**6SL3130-6TE21-6AA4**
36 (40)	**6SL3130-6TE23-6AA3**
55 (60)	**6SL3130-6TE25-5AA3**

Description	Article No.
Accessories	
Shield connection plate For Line Modules and Motor Modules in booksize format	
• with a width of 150 mm (5.91 in)	**6SL3162-1AF00-0AA1**
• with a width of 200 mm (7.87 in)	**6SL3162-1AH01-0AA0**
DC link rectifier adapter For direct infeed of DC link voltage	
• Screw-type terminals 0.5 ... 10 mm^2 For Line Modules and Motor Modules in booksize format with a width of 50 mm (1.97 in), 75 mm (2.95 in) and 100 mm (3.94 in)	**6SL3162-2BD00-0AA0**
• Screw-type terminals 35 ... 95 mm^2 For Line Modules and Motor Modules in booksize format with a width of 150 mm (5.91 in), 200 mm (7.87 in) and 300 mm (11.81 in)	**6SL3162-2BM00-0AA0**
DC link adapter (2 units) For multi-tier configuration Screw-type terminals 35 ... 95 mm^2 For all Line Modules and Motor Modules in booksize format	**6SL3162-2BM01-0AA0**
Accessories for re-ordering	
24 V terminal adapter For all Line Modules and Motor Modules in booksize format	**6SL3162-2AA00-0AA0**
24 V jumper For connection of the 24 V busbars (for booksize format)	**6SL3162-2AA01-0AA0**
Terminal Kit (Plug-in terminals, DRIVE-CLiQ jumper (length = module width + 60 mm (2.36 in)), dust protection blanking plugs) For DRIVE-CLiQ port For Smart Line Modules with a width of	
• 50 mm (1.97 in)	**6SL3163-8KB00-0AA1**
• 100 mm (3.94 in)	**6SL3163-8FD00-0AA0**
• 150 mm (5.91 in)	**6SL3163-8GF00-0AA0**
• 200 mm (7.87 in)	**6SL3163-8HH00-0AA0**
Warning labels in 30 languages This label set can be glued over the standard German or English labels to provide warnings in other languages. One set of labels is supplied with the devices. One sign in each of the following languages is provided in each set: BG, CN, CZ, DE, DK, EE, ES, FI, FR, GB, GR, HU, IE, IS, IT, JP, KR, LT, LV, MT, NL, NO, PL, PT, RO, RU, SE, SI, SK, TR	**6SL3166-3AB00-0AA0**
Dust protection blanking plugs (50 units) For DRIVE-CLiQ port	**6SL3066-4CA00-0AA0**

Technical specifications

	Smart Line Module in booksize format 6SL313...
Line voltage (up to 2000 m (6562 ft) above sea level)	380 ... 480 V 3 AC ±10 % (in operation -15 % <1 min)
Line frequency	47 ... 63 Hz
SCCR **(short-circuit current rating)**	65 kA in conjunction with the recommended Class J fuse, or circuit breaker according to UL489 / CSA 22.2 No. 5-02 see recommended line-side components
Line power factor at rated power	
• Fundamental power factor (cos φ_1)	>0.96
• Total (λ)	0.65 ... 0.9
Overvoltage category according to EN 60664-1	Class III
DC link voltage, approx.	1.35 × line voltage [1)]
Electronics power supply	24 V DC -15 %/+20 %
Radio interference suppression	
• Standard	No radio interference suppression
• With line filter	Category C2 to EN 61800-3 Total cable length up to 350 m (1148 ft) (shielded)
Type of cooling	Internal air cooling (power units with increased air cooling using an integrated fan)
Permissible ambient and coolant temperature (air) during operation for line-side components, Line Modules and Motor Modules	0 ... 40 °C (32 ... 104 °F) without derating, > 40 ... 55 °C (104 ... 131 °F), see derating characteristics
Installation altitude	Up to 1000 m (3281 ft) above sea level without derating, > 1000 ... 4000 m (3281 ... 13124 ft) above sea level, see derating characteristics
Declarations of conformity	CE (Low Voltage and EMC Directives)
Certificate of suitability	cULus

[1)] The DC link voltage is maintained at the mean value of the rectified line voltage. For further information, see section configuration notes.

© Siemens AG 2017

Technical specifications (continued)

Line voltage 380 ... 480 V 3 AC		Smart Line Module in booksize format				
Internal air cooling		6SL3130-6AE15-0AB1	6SL3130-6AE21-0AB1	6SL3130-6TE21-6AA4	6SL3130-6TE23-6AA3	6SL3130-6TE25-5AA3
Infeed/regenerative feedback power						
• Rated power P_{rated}						
• At 380 V 3 AC	kW	**5**	**10**	**16**	**36**	**55**
• At 460 V 3 AC [2]	(hp)	**(5)**	**(10)**	**(18)**	**(40)**	**(60)**
• For S6 duty (40 %) P_{S6}	kW	6.5	13	21	47	71
• P_{max}	kW	10	20	35	70	91
DC link current						
• At 540/600 V DC	A	9.3/8.3	18.5/16.6	30/27	67/60	105/92
• For S6 duty (40 %)	A	11	22	35	79	138
• Maximum	A	16.6	33.2	59	118	178
Input current						
• Rated current at 380/400/480 V 3 AC	A	8.6/8.1/6.7	17/16.2/12.8	29/27.5/24.5	62/59/51	94/90/77
• For S6 duty (40 %) at 400 V	A	10.6	21.1	35	76	106
• At 400 V max.	A	15.7	31.2	57.5	112	130
Current requirement 24 V DC electronics power supply, max.	A	0.8	0.9	0.95	1.5	1.9
Current carrying capacity						
• 24 V DC busbars	A	20	20	20	20	20
• DC link busbars	A	100	100	100	200	200
DC link capacitance						
• Smart Line Module	µF	220	330	710	1410	1880
• Drive line-up, max.	µF	6000	6000	20000	20000	20000
Power loss [1]	kW	0.08	0.14	0.19	0.406	0.666
Cooling air requirement	m^3/s (ft^3/s)	0.008 (0.3)	0.008 (0.3)	0.016 (0.6)	0.031 (1.1)	0.044 (1.5)
Sound pressure level L_{pA} (1 m)	dB	<60	<60	<60	<65	<60
Line connection U1, V1, W1		Screw-type terminals (X1)	Screw-type terminals (X1)	Screw-type terminals (X1)	M6 screw studs (X1)	M6 screw studs (X1)
• Conductor cross-section	mm^2	2.5 ... 6	2.5 ... 6	2.5 ... 10	2.5 ... 50	2.5 ... 95
Shield connection		Shield connection plate integrated into the connector	Shield connection plate integrated into the connector	Shield connection plate integrated into the connector	See Accessories	See Accessories
PE connection		M5 screw	M5 screw	M5 screw	M6 screw	M6 screw
Cable length, max. (total of all motor power cables and DC link)						
• Shielded	m (ft)	350 (1148)	350 (1148)	630 (2067)	630 (2067)	1000 (3281)
• Unshielded	m (ft)	560 (1837)	560 (1837)	850 (2789)	850 (2789)	1500 (4922)
Degree of protection		IP20	IP20	IP20	IP20	IP20
Dimensions						
• Width	mm (in)	50 (1.97)	50 (1.97)	100 (3.94)	150 (5.91)	200 (7.87)
• Height	mm (in)	380 (14.96)	380 (14.96)	380 (14.96)	380 (14.96)	380 (14.96)
• Depth	mm (in)	270 (10.63)	270 (10.63)	270 (10.63)	270 (10.63)	270 (10.63)
Weight, approx.	kg (lb)	4.7 (10.4)	4.8 (10.6)	7 (15.4)	10 (22.0)	17 (37.5)

[1] Power loss of Smart Line Module at rated output including losses of 24 V DC electronics power supply.

[2] Nominal hp ratings are provided for ease of assigning components only. The Line Module outputs are dependent on the Motor Module loading and are to be dimensioned accordingly.

© Siemens AG 2017

Characteristic curves

Overload capability

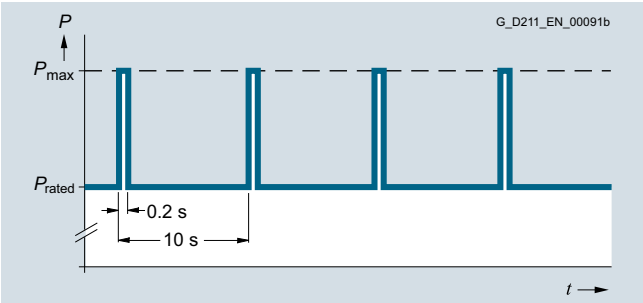

Duty cycle with previous load

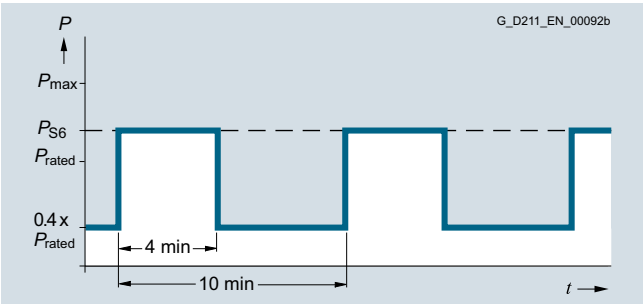

S6 duty cycle with previous load

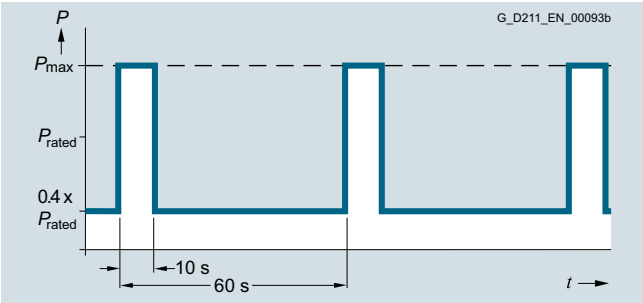

S6 duty cycle with previous load

Derating characteristics

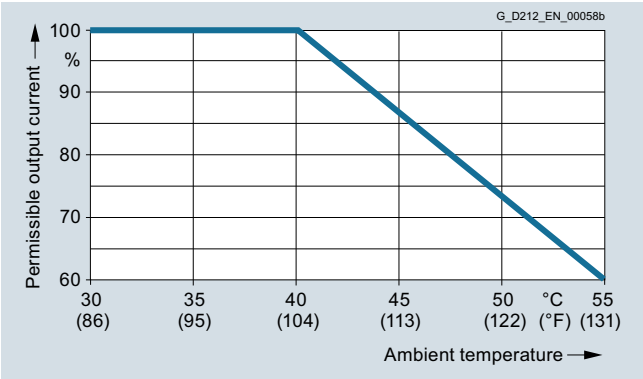

Output power as a function of ambient temperature

Installation altitude

- >1000 ... 4000 m (3281 ... 13124 ft) above sea level
  - Reduction of the output current by 10 % per 1000 m (3281 ft), or
  - Reduction of the ambient temperature by 5 °C (41 °F) per 1000 m (3281 ft)
- >2000 ... 4000 m (6562 ... 13124 ft) above sea level
  - Operation on line supply systems with grounded neutral point, or
  - Operation with an isolating transformer with secondary grounded neutral point

© Siemens AG 2017

Overview

Line reactors are required in order for the Smart Line Modules to function. The use of other makes of line reactor can lead to malfunctions or irreparable damage to equipment.

Selection and ordering data

Rated power of the Smart Line Module kW (hp)	Suitable for Smart Line Module in booksize or booksize compact format	**Line reactor** Article No.
Line voltage 380 ... 480 V 3 AC		
5 (5)	6SL3130-6AE15-0AB1	**6SL3000-0CE15-0AA0**
10 (10)	6SL3130-6AE21-0AB1	**6SL3000-0CE21-0AA0**
16 (18)	6SL3130-6TE21-6AA4 6SL3430-6TE21-6AA1	**6SL3000-0CE21-6AA0**
36 (40)	6SL3130-6TE23-6AA3	**6SL3000-0CE23-6AA0**
55 (60)	6SL3130-6TE25-5AA3	**6SL3000-0CE25-5AA0**

Technical specifications

Line voltage 380 ... 480 V 3 AC		**Line reactor**				
		6SL3000-0CE15-0AA0	6SL3000-0CE21-0AA0	6SL3000-0CE21-6AA0	6SL3000-0CE23-6AA0	6SL3000-0CE25-5AA0
Rated current	A	14	28	35	69	103
Power loss	kW	0.062	0.116	0.11	0.17	0.19
Line/load connection 1U1, 1V1, 1W1 / 1U2, 1V2, 1W2		Screw-type terminals	Screw-type terminals	Screw-type terminals	Screw-type terminals	Screw-type terminals
• Conductor cross-section	mm^2	4	10	10	35	70
PE connection		M4 screw	M4 screw	M5 screw studs according to DIN 46234	M6 screw studs according to DIN 46234	M8 screw studs according to DIN 46234
Degree of protection		IP20	IP20	IP20	IP20	IP20
Dimensions						
• Width	mm (in)	150 (5.91)	177 (6.97)	219 (8.62)	225 (8.86)	300 (11.81)
• Height	mm (in)	175 (6.89)	196 (7.72)	180 (7.09)	235 (9.25)	280 (11.02)
• Depth	mm (in)	66.5 (2.62)	86 (3.39)	119 (4.69)	224 (8.82)	290 (11.42)
Weight, approx.	kg (lb)	3.7 (8.16)	7.5 (16.5)	9.5 (20.9)	17 (37.5)	36 (79.4)
Certificate of suitability		cURus	cURus	cURus	cURus	cURus
Suitable for Smart Line Module in booksize or booksize compact format	Type	6SL3130-6AE15-0AB1	6SL3130-6AE21-0AB1	6SL3130-6TE21-6AA4 6SL3430-6TE21-6AA1	6SL3130-6TE23-6AA3	6SL3130-6TE25-5AA3
• Rated power of the Smart Line Module	kW (hp)	5 (5)	10 (10)	16 (18)	36 (40)	55 (60)

© Siemens AG 2017

Line filters for Smart Line Modules

Overview

In plants with stringent EMC requirements, line filters work together with line reactors to restrict the conducted interference emanating from the Power Modules to the limit values of Class A1 as defined in EN 55011 and Category C2 as defined in EN 61800-3. Line filters are only suitable for direct connection to TN line systems.

Selection and ordering data

Rated power of the Smart Line Module kW (hp)	Suitable for Smart Line Module in booksize or booksize compact format	**Line filter** Article No.
Line voltage 380 ... 480 V 3 AC		
5 (5)	6SL3130-6AE15-0AB1	**6SL3000-0HE15-0AA0**
10 (10)	6SL3130-6AE21-0AB1	**6SL3000-0HE21-0AA0**
16 (18)	6SL3130-6TE21-6AA4 6SL3430-6TE21-6AA1	**6SL3000-0BE21-6DA0**
36 (40)	6SL3130-6TE23-6AA3	**6SL3000-0BE23-6DA1**
55 (60)	6SL3130-6TE25-5AA3	**6SL3000-0BE25-5DA0**

Technical specifications

Line voltage 380 ... 480 V 3 AC		**Line filter**				
		6SL3000-0HE15-0AA0	6SL3000-0HE21-0AA0	6SL3000-0BE21-6DA0	6SL3000-0BE23-6DA1	6SL3000-0BE25-5DA0
Rated current	A	12	25	36	74	105
Power loss	kW	0.02	0.02	0.016	0.026	0.043
Line/load connection L1, L2, L3 / U, V, W		Screw-type terminals	Screw-type terminals	Screw-type terminals	Screw-type terminals	Screw-type terminals
• Conductor cross-section	mm^2	10	10	10	35	50
PE connection		M6 screw studs according to DIN 46234	M6 screw studs according to DIN 46234	M6 screw studs according to DIN 46234	M6 screw studs according to DIN 46234	M8 screw studs according to DIN 46234
Degree of protection		IP20	IP20	IP20	IP20	IP20
Dimensions						
• Width	mm (in)	60 (2.36)	60 (2.36)	50 (1.97)	75 (2.95)	100 (3.94)
• Height	mm (in)	285 (11.22)	285 (11.22)	429 (16.89)	433 (17.05)	466 (18.35)
• Depth	mm (in)	122 (4.80)	122 (4.80)	226 (8.90)	226 (8.90)	226 (8.90)
Weight, approx.	kg (lb)	2.1 (4.63)	2.3 (5.07)	5 (11.0)	7.5 (16.5)	11.5 (25.4)
Certificate of suitability		cURus	cURus	cURus	cURus	cURus
Suitable for Smart Line Module in booksize or booksize compact format	Type	6SL3130-6AE15-0AB1	6SL3130-6AE21-0AB1	6SL3130-6TE21-6AA4 6SL3430-6TE21-6AA1	6SL3130-6TE23-6AA3	6SL3130-6TE25-5AA3
• Rated power of the Smart Line Module	kW (hp)	5 (5)	10 (10)	16 (18)	36 (40)	55 (60)

© Siemens AG 2017

Selection and ordering data

Suitable line-side power components are assigned depending on the power rating of the Smart Line Module.

The tables below list recommended components.

Additional information about the line-side power components can be found in Catalogs LV 10, IC 10 and IC 10 AO as well as the Industry Mall.

Assignment of line-side power components to Smart Line Modules in booksize or booksize compact format

Rated power	Suitable for Smart Line Module in booksize or booksize compact format	**Line contactor**	**Circuit breaker IEC 60947**	**Circuit breaker UL489/CSA C22.2 No. 5-02**	**Main switch**
kW (hp)	Type	Type	Article No.	Article No.	Article No.
Line voltage 380 ... 480 V 3 AC					
5 (5)	6SL3130-6AE15-0AB1	**3RT1023**	**3RV2021-4BA10**	**3VL1102-2KM30-....** *)	**3LD2003-0TK51**
10 (10)	6SL3130-6AE21-0AB1	**3RT1026**	**3RV1031-4FA10**	**3VL1135-2KM30-....** *)	**3LD2203-0TK51**
16 (18)	6SL3130-6TE21-6AA4 6SL3430-6TE21-6AA1	**3RT1035**	**3RV1031-4FA10**	**3VL1135-2KM30-....** *)	**3LD2504-0TK51**
36 (40)	6SL3130-6TE23-6AA3	**3RT1045**	**3RV1041-4LA10**	**3VL2508-2KN30-....** *)	**3LD2704-0TK51**
55 (60)	6SL3130-6TE25-5AA3	**3RT1054**	**3VL2712-1DC33-....** *)	**3VL2512-2KN30-....** *)	**3KA5330-1GE01**

Rated power	Suitable for Smart Line Module in booksize or booksize compact format	**Fuse switch disconnector**	**Switch disconnector with fuse holders**	**LV HRC fuse (gL/gG)**			**UL/CSA fuse, Class J** [1] Available from: Mersen www.ep.mersen.com		
kW (hp)	Type	Article No.	Article No.	Rated current	Size	Article No.	Rated current	Size mm (in)	Reference No.
Line voltage 380 ... 480 V 3 AC									
5 (5)	6SL3130-6AE15-0AB1	**3NP1123-1CA20**	**3KL5030-1GB01**	16 A	000	**3NA3805**	17.5 A	21 × 57 (0.83 × 2.24)	AJT17-1/2
10 (10)	6SL3130-6AE21-0AB1	**3NP1123-1CA20**	**3KL5030-1GB01**	35 A	000	**3NA3814**	35 A	27 × 60 (1.06 × 2.36)	AJT35
16 (18)	6SL3130-6TE21-6AA4 6SL3430-6TE21-6AA1	**3NP1123-1CA20**	**3KL5030-1GB01**	35 A	000	**3NA3814**	35 A	27 × 60 (1.06 × 2.36)	AJT35
36 (40)	6SL3130-6TE23-6AA3	**3NP1123-1CA20**	**3KL5230-1GB01**	80 A	000	**3NA3824**	80 A	29 × 117 (1.14 × 4.61)	AJT80
55 (60)	6SL3130-6TE25-5AA3	**3NP1143-1DA20**	**3KL5530-1GB01**	125 A	000	**3NA3132**	125 A	41 × 146 (1.61 × 5.75)	AJT125

[1] Not suitable for 3NP and 3KL switch disconnectors.

*) See Catalog LV 10 for Article No. supplements.

© Siemens AG 2017

Overview

Basic Line Modules in booksize format

Basic Line Modules are used for applications in which no energy is returned to the supply or where the energy exchange between motor and generator axes takes place in the DC link. Basic Line Modules can only feed energy from the supply system into the DC link, energy cannot be fed back into the supply system. The DC link voltage is directly derived from the 3-phase line voltage via a 6-pulse bridge circuit. Basic Line Modules are suitable for connection to grounded, star TN, TT and non-grounded symmetrical IT supply systems. The connected Motor Modules are pre-charged over the integrated pre-charging resistors (20 kW and 40 kW) or through activation of the thyristors (100 kW).

The 20 kW and 40 kW Basic Line Modules are equipped with an integrated brake chopper and can be directly used for applications in generating mode after connecting an external braking resistor.
A Braking Module is only required with a 100 kW Basic Line Module in generating mode.

Design

The Basic Line Modules in booksize format feature the following connections and interfaces as standard:

- 1 power connection
- 1 connection for the 24 V DC electronics power supply
- 1 DC link connection
- 3 DRIVE-CLiQ sockets
- 1 connection for braking resistor
  (20 kW (25 hp) and 40 kW (50 hp) Basic Line Modules only)
- 1 temperature sensor input for KTY84-130, Pt1000 or PTC
  (Pt1000 can be used from firmware V4.7 HF17)

The status of the Basic Line Modules is indicated via two multi-color LEDs.

The scope of supply of the Basic Line Modules includes:

- DRIVE-CLiQ cable for connection to the adjacent Control Unit on the left for drive control, length 0.11 m (4.33 in)
- DRIVE-CLiQ cable (length depends on Basic Line Module width) for connection to the adjacent Motor Module, length = width of Basic Line Module + 0.11 m (4.33 in)
- Jumper for connecting the 24 V DC busbar to the adjacent Motor Module
- 24 V terminal adapter (X24)
- Connector X21
- 2 blanking plugs for sealing unused DRIVE-CLiQ sockets
- 1 set of warning labels in 30 languages

© Siemens AG 2017

Integration

The Basic Line Module receives its control information via DRIVE-CLiQ from:

- CU320-2 Control Unit
- SINUMERIK 840D sl with
  - NCU 710.3B PN
  - NCU 720.3B PN
  - NCU 730.3B PN
  - Numeric Control Extensions NX10.3/NX15.3
- SIMOTION D

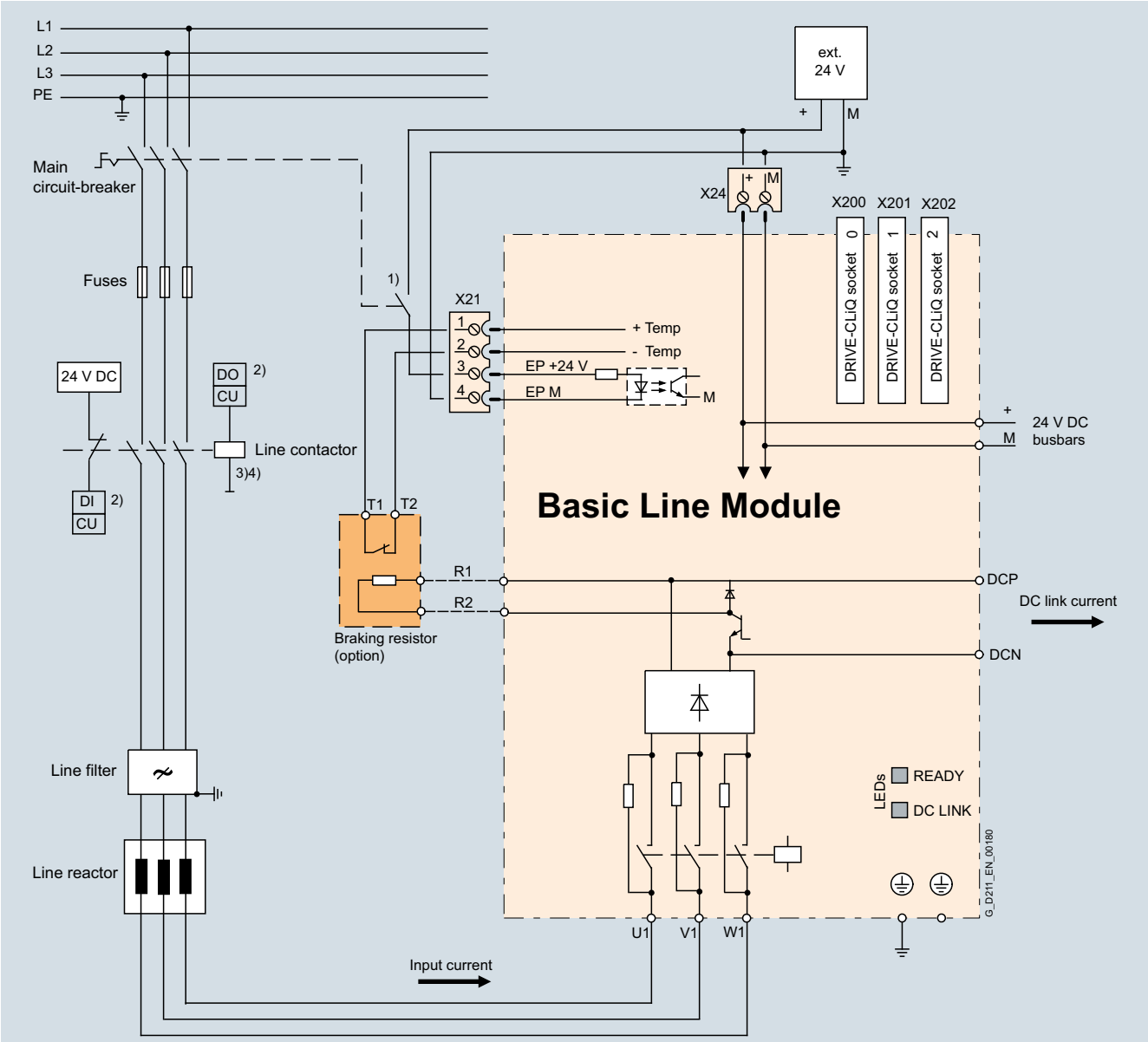

1) For operation, a 24 V DC voltage must be applied between terminals “EP +24 V” and “EP M”
2) Digital input (DI) or digital output (DO), controlled by the Control Unit.
3) No additional load permitted downstream of the line contactor.
4) The current carrying capacity of the digital output (DO) must be taken into account; an output interface element may have to be used.

Connection example of 20 kW and 40 kW Basic Line Modules in booksize format

Note:

The thermostatic switch built into the braking resistor must be looped into the shutdown chain of the drive to prevent thermal overloading of the system in the event of a fault. If a braking resistor is not connected, a jumper must be connected between X21.1 and X21.2.

© Siemens AG 2017

Integration (continued)

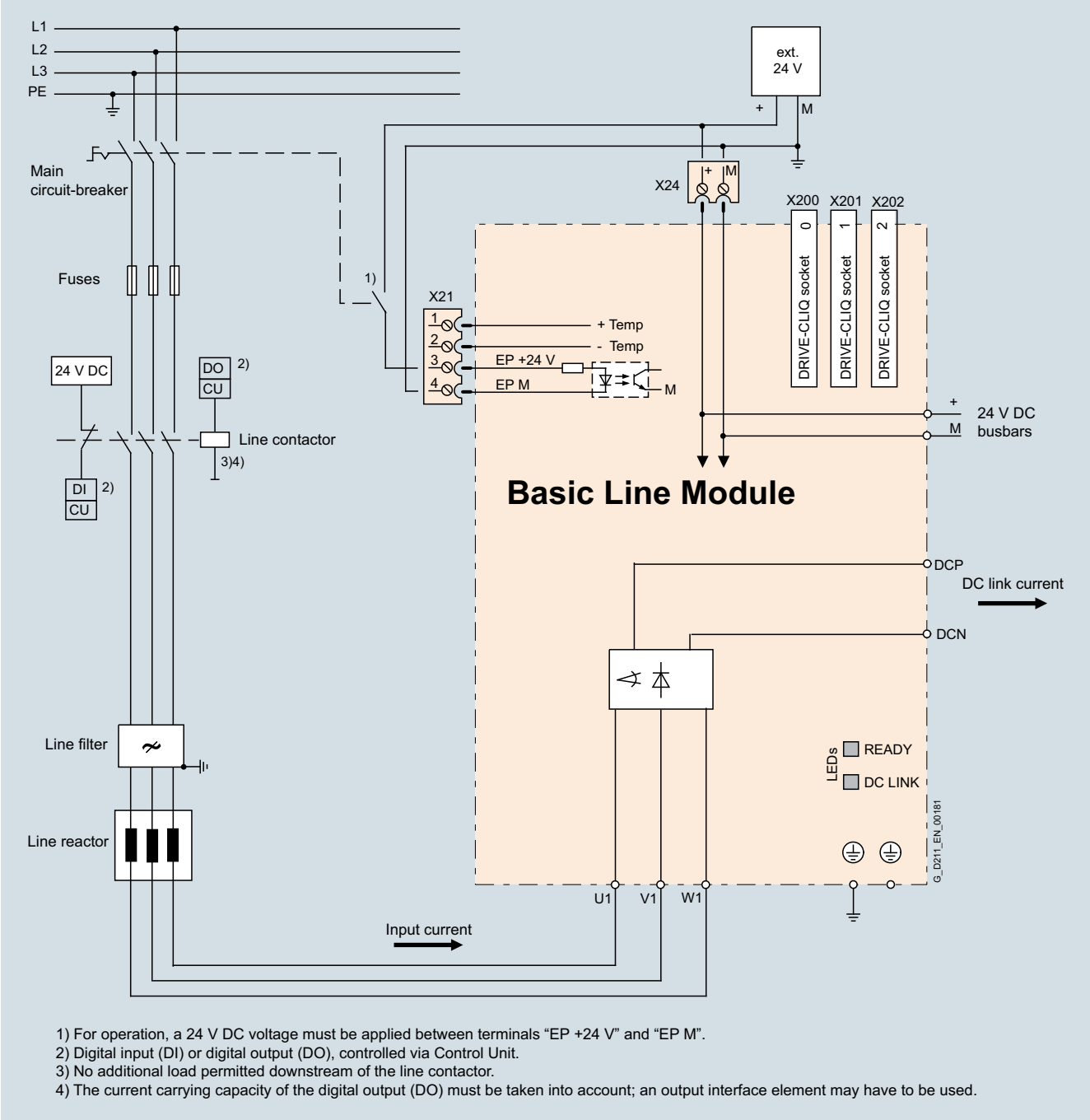

1) For operation, a 24 V DC voltage must be applied between terminals “EP +24 V” and “EP M”.
2) Digital input (DI) or digital output (DO), controlled via Control Unit.
3) No additional load permitted downstream of the line contactor.
4) The current carrying capacity of the digital output (DO) must be taken into account; an output interface element may have to be used.

Connection example of 100 kW Basic Line Module in booksize format

© Siemens AG 2017

Selection and ordering data

Rated power kW (hp)	**Basic Line Modules in booksize format** Article No.
Line voltage 380 ... 480 V 3 AC	
20 (25)	**6SL3130-1TE22-0AA0**
40 (60)	**6SL3130-1TE24-0AA0**
100 (125)	**6SL3130-1TE31-0AA0**

Description	Article No.
Accessories	
Shield connection plate For Line Modules and Motor Modules in booksize format	
• With a width of 150 mm (5.91 in)	**6SL3162-1AF00-0AA1**
• With a width of 200 mm (7.87 in)	**6SL3162-1AH01-0AA0**
DC link rectifier adapter For direct infeed of DC link voltage	
• Screw-type terminals 0.5 ... 10 mm^2 For Line Modules and Motor Modules in booksize format with a width of 50 mm (1.97 in), 75 mm (2.95 in) and 100 mm (3.94 in)	**6SL3162-2BD00-0AA0**
• Screw-type terminals 35 ... 95 mm^2 For Line Modules and Motor Modules in booksize format with a width of 150 mm (5.91 in), 200 mm (7.87 in) and 300 mm (11.8 in)	**6SL3162-2BM00-0AA0**
DC link adapter (2 units) For multi-tier configuration Screw-type terminals 35 ... 95 mm^2 For all Line Modules and Motor Modules in booksize format	**6SL3162-2BM01-0AA0**
Accessories for re-ordering	
24 V terminal adapter For all Line Modules and Motor Modules in booksize format	**6SL3162-2AA00-0AA0**
24 V jumper For connection of the 24 V busbars (for booksize format)	**6SL3162-2AA01-0AA0**
Terminal Kit (plug-in terminals, DRIVE-CLiQ jumper (length = module width + 60 mm (2.36 in)), dust protection blanking plugs) For DRIVE-CLiQ port For Basic Line Modules with a width of	
• 100 mm (3.94 in)	**6SL3163-8LD00-0AA0**
• 150 mm (5.91 in)	**6SL3163-8GF00-0AA0**
• 200 mm (7.87 in)	**6SL3163-8HH00-0AA0**
Warning labels in 30 languages This label set can be glued over the standard German or English labels to provide warnings in other languages. One set of labels is supplied with the devices. One sign in each of the following languages is provided in each set: BG, CN, CZ, DE, DK, EE, ES, FI, FR, GB, GR, HU, IE, IS, IT, JP, KR, LT, LV, MT, NL, NO, PL, PT, RO, RU, SE, SI, SK, TR	**6SL3166-3AB00-0AA0**
Dust protection blanking plugs (50 units) For DRIVE-CLiQ port	**6SL3066-4CA00-0AA0**

Technical specifications

	Basic Line Module in booksize format 6SL313...
Line voltage (up to 2000 m (6562 ft) above sea level)	380 ... 480 V 3 AC ±10 % (-15 % <1 min)
Line frequency	47 ... 63 Hz
SCCR **(short-circuit current rating)**	65 kA in conjunction with the recommended Class J fuse, or circuit breaker according to UL489 / CSA 22.2 No. 5-02 see recommended line-side components
Line power factor at rated power	
• Fundamental (cos φ_1)	>0.96
• Total (λ)	0.75 ... 0.93
Overvoltage category according to EN 60664-1	Class III
DC link voltage, approx.	1.35 × line voltage [1)]
Electronics power supply	24 V DC -15 %/+20 %
Radio interference suppression	
• Standard	
- 20 kW and 40 kW (25 hp and 40 hp) Basic Line Modules	No radio interference suppression
- 100 kW (125 hp) Basic Line Module	Category C3 to EN 61800-3 Total cable length up to 350 m (1148 ft) (shielded)
• With line filter	Category C2 to EN 61800-3 Total cable length up to 350 m (1148 ft) (shielded)
Type of cooling	Internal air cooling (power units with increased air cooling by built-in fan)
Permissible ambient and coolant temperature (air) during operation for line-side components, Line Modules and Motor Modules	0 ... 40 °C (32 ... 104 °F) without derating, > 40 ... 55 °C (104 ... 131 °F), see derating characteristics
Installation altitude	Up to 1000 m (3281 ft) above sea level without derating, > 1000 ... 4000 m (3281 ... 13124 ft) above sea level, see derating characteristics
Declarations of conformity	CE (Low Voltage and EMC Directives)
Certificate of suitability	cULus

[1)] The DC link voltage is unregulated and load-dependent.
For further information see section configuration notes.

© Siemens AG 2017

Technical specifications (continued)

Line voltage 380 ... 480 V 3 AC		Basic Line Modules in booksize format		
Internal air cooling		6SL3130-1TE22-0AA0	6SL3130-1TE24-0AA0	6SL3130-1TE31-0AA0
Power				
• Rated power P_{rated}				
- At 380 V 3 AC	kW	20	40	100
- At 460 V 3 AC [2]	(hp)	(26)	(50)	(125)
• For S6 duty (40 %) P_{S6}	kW	26	52	130
• P_{max}	kW	60	120	175
Braking power with external braking resistor				
• $P_{Bmax.}$ (=2 × P_{rated})	kW	40	80	–
• Continuous braking power P_d (=0.25 × P_{rated})	kW	5	10	–
DC link current				
• At 600 V DC	A	33.5	67	167
• For S6 duty (40 %)	A	43	87	217
• Maximum	A	100	200	292
Input current				
• Rated current at 380 V 3 AC	A	35	70	172
• Maximum	A	100	188	290
Activation threshold Braking module	V	774	774	–
Resistance value of the external braking resistor	Ω	≥14.8	≥7.4	–
Cable length, max. to braking resistor	m (ft)	15 (50)	15 (50)	–
Connection for braking resistor (X2)		Screw-type terminals	Screw-type terminals	–
• Conductor cross-section, max.	mm^2	0.5 ... 4	0.5 ... 10	–
Current requirement, max. 24 V DC electronic power supply	A	1	1.4	2
Current carrying capacity				
• 24 V DC busbars	A	20	20	20
• DC link busbars	A	100	200	200
DC link capacitance				
• Basic Line Module	µF	940	1880	4100
• Drive line-up, max.	µF	20000	20000	50000
Power loss [1]	kW	0.144	0.284	0.628
Cooling air requirement	m^3/s (ft^3/s)	0.016 (0.6)	0.031 (1.1)	0.05 (1.8)
Sound pressure level L_{pA} (1 m)	dB	<60	<65	<65
Line connection U1, V1, W1		Screw-type terminals	Screw-type terminals	M8 screw stud
• Conductor cross-section, max.	mm^2	0.5 … 16	10 ... 50	1 × 35 ... 120 or 2 × 50
Shield connection		Integrated into the power plug	See Accessories	See Accessories
PE connection		M5 screw	M6 screw	M6 screw
Cable length, max. (total of all motor power cables and DC link)				
• Shielded/unshielded	m (ft)	1000/1500 (3281/4922)	1000/1500 (3281/4922)	1000/1500 (3281/4922)
Degree of protection		IP20	IP20	IP20
Dimensions				
• Width	mm (in)	100 (3.94)	150 (5.91)	200 (7.87)
• Height	mm (in)	380 (14.96)	380 (14.96)	380 (14.96)
• Depth	mm (in)	270 (10.63)	270 (10.63)	270 (10.63)
Weight, approx.	kg (lb)	6.8 (14.9)	11.3 (24.9)	15.8 (34.8)

[1] Power loss of Basic Line Module at rated output including losses of 24 V DC electronics power supply.

[2] Nominal hp ratings are provided for ease of assigning components only. The Line Module outputs are dependent on the Motor Module loading and are to be dimensioned accordingly.

© Siemens AG 2017

Characteristic curves

Overload capability

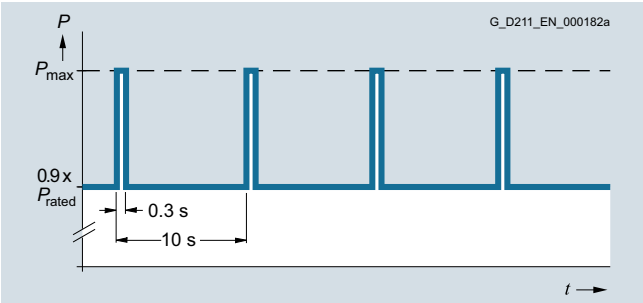

Duty cycle with previous load

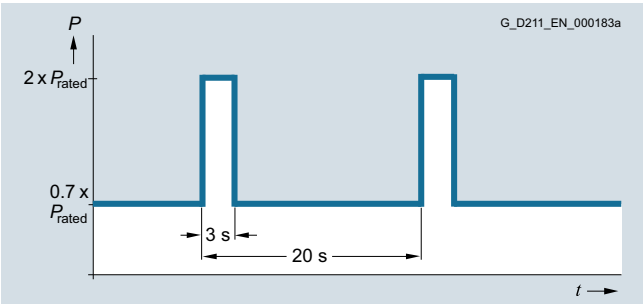

Duty cycle with previous load

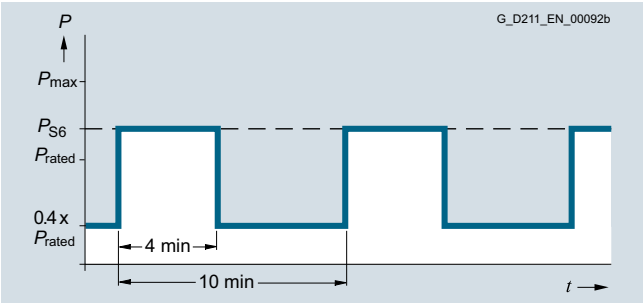

S6 duty cycle with previous load

20 kW (25 hp) and 40 kW (50 hp) Basic Line Modules only

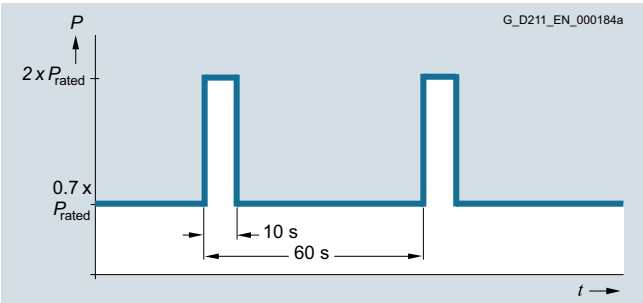

Duty cycle with previous load

Derating characteristics

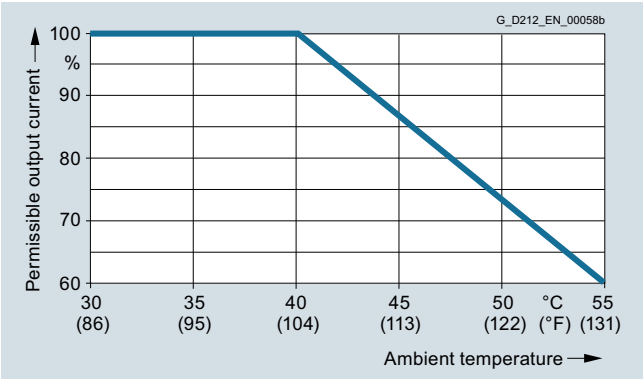

Output power as a function of ambient temperature

Installation altitude

- >1000 ... 4000 m (3281 ... 13124 ft) above sea level
  - Reduction of the output current by 10 % per 1000 m (3281 ft), or
  - Reduction of the ambient temperature by 5 °C (41 °F) per 1000 m (3281 ft)
- >2000 ... 4000 m (6562 ... 13124 ft) above sea level
  - Operation on line supply systems with grounded neutral point, or
  - Operation with an isolating transformer with secondary grounded neutral point

© Siemens AG 2017

Characteristic curves (continued)

Braking power with external braking resistor

The following duty cycles are defined for the braking modules of the 20 kW (25 hp) and 40 kW (50 hp) Basic Line Modules:

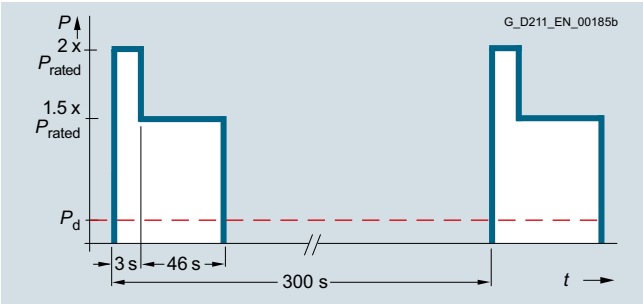

The maximum possible braking power P_{max} is calculated using the following formula:

$P_{max} = U^2/R$
U = Activation threshold
R = Resistance value of the external braking resistor

The maximum braking power is achieved with the smallest permissible resistance value. The maximum possible braking power falls at larger resistance values.

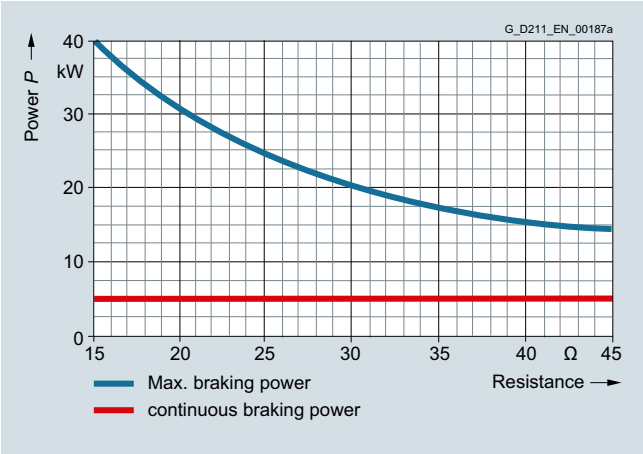

Braking power of the 20 kW Basic Line Modules depending on the connected braking resistor

When the recommended braking resistor is used, the following values result for the maximum braking power or continuous braking power:

Braking resistor 6SE7023-2ES87-2DC0
Resistance value = 20 Ω → max. braking power = 30 kW; continuous braking power = 5 kW

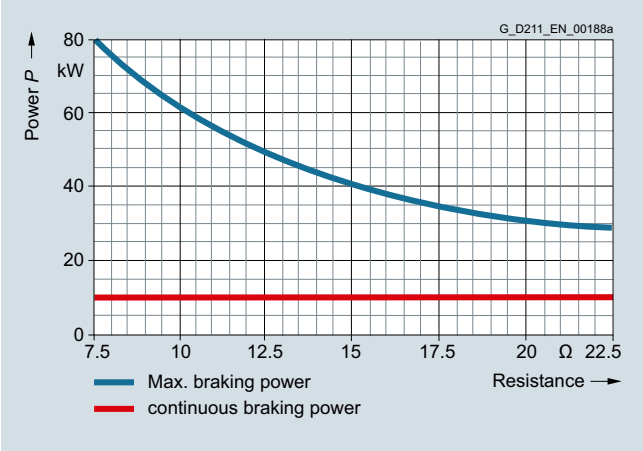

Braking power of the 40 kW Basic Line Modules depending on the connected braking resistor

When the recommended braking resistor is used, the following values result for the maximum braking power or continuous braking power:

Braking resistor 6SE7028-0ES87-2DC0
Resistance value = 8 Ω → max. braking power = 75 kW; continuous braking power = 10 kW (limited by braking module)

© Siemens AG 2017

Overview

20 kW (25 hp) and 100 kW (125 hp) line reactors

Line reactors reduce low-frequency line harmonic distortions and offload the semiconductors of the Basic Line Module.

Selection and ordering data

Rated power of the Basic Line Module kW (hp)	**Suitable for Basic Line Module in booksize format**	**Line reactor** Article No.
Line voltage 380 ... 480 V 3 AC		
20 (25)	6SL3130-1TE22-0AA0	**6SL3000-0CE22-0AA0**
40 (60)	6SL3130-1TE24-0AA0	**6SL3000-0CE24-0AA0**
100 (125)	6SL3130-1TE31-0AA0	**6SL3000-0CE31-0AA0**

Technical specifications

Line voltage 380 ... 480 V 3 AC		**Line reactor**		
		6SL3000-0CE22-0AA0	6SL3000-0CE24-0AA0	6SL3000-0CE31-0AA0
Rated current	A	37	74	185
Power loss at 50/60 Hz	kW	0.13/0.154	0.27/0.32	0.48/0.565
Line/load connection		Screw-type terminals	Screw-type terminals	Flat connector for M8 screw
• Conductor cross-section	mm^2	0.5 … 16	2.5 ... 35	–
PE connection		M4 screw	M6 screw studs	M8 screw studs
Degree of protection		IP20	IP20	IP00
Dimensions				
• Width	mm (in)	178 (7.01)	210 (8.27)	261 (10.28)
• Height	mm (in)	165 (6.50)	239 (9.41)	228 (8.98)
• Depth	mm (in)	100 (3.94)	105 (4.13)	138 (5.43)
Weight, approx.	kg (lb)	5.2 (11.5)	11.2 (24.7)	21.7 (47.9)
Certificate of suitability		cURus	cURus	cURus
Suitable for Basic Line Module in booksize format	Type	6SL3130-1TE22-0AA0	6SL3130-1TE24-0AA0	6SL3130-1TE31-0AA0
• Rated power of the Basic Line Module	kW (hp)	20 (25)	40 (50)	100 (125)

© Siemens AG 2017

Overview

In plants with strict EMC requirements, line filters work together with line reactors to restrict the conducted interference emanating from the power modules to the limit values of Class A1 as defined in EN 55011 and Category C2 as defined in EN 61800-3. Line filters are only suitable for direct connection to TN line systems.

Selection and ordering data

Rated power of the Basic Line Module kW (hp)	**Suitable for Basic Line Module in booksize format**	**Line filter** Article No.
Line voltage 380 ... 480 V 3 AC		
20 (25)	6SL3130-1TE22-0AA0	**6SL3000-0BE21-6DA0**
40 (60)	6SL3130-1TE24-0AA0	**6SL3000-0BE23-6DA1**
100 (125)	6SL3130-1TE31-0AA0	**6SL3000-0BE31-2DA0**

Technical specifications

Line voltage 380 ... 480 V 3 AC		**Line filter**		
		6SL3000-0BE21-6DA0	6SL3000-0BE23-6DA1	6SL3000-0BE31-2DA0
Rated current	A	36	74	192
Power loss	kW	0.016	0.026	0.043
Line/load connection L1, L2, L3 / U, V, W		Screw-type terminals	Screw-type terminals	Screw-type terminals
• Conductor cross-section	mm^2	10	35	95
PE connection		M6 screw stud	M6 screw stud	M10 screw stud
Degree of protection		IP20	IP20	IP20
Dimensions				
• Width	mm (in)	50 (1.97)	75 (2.95)	150 (5.91)
• Height	mm (in)	429 (16.89)	433 (17.05)	479 (18.86)
• Depth	mm (in)	226 (8.90)	226 (8.90)	226 (8.90)
Weight, approx.	kg (lb)	5 (11.3)	7.5 (16.5)	18.5 (40.8)
Certificate of suitability		cURus	cURus	cURus
Suitable for Basic Line Module in booksize format	Type	6SL3130-1TE22-0AA0	6SL3130-1TE24-0AA0	6SL3130-1TE31-0AA0
• Rated power of the Basic Line Module	kW (hp)	20 (25)	40 (50)	100 (125)

© Siemens AG 2017

Selection and ordering data

Suitable line-side power components are assigned depending on the power rating of the Basic Line Module.

The tables below list recommended components.

Additional information about the line-side power components can be found in Catalogs LV 10, IC 10 and IC 10 AO as well as the Industry Mall.

Assignment of line-side power components to Basic Line Modules in booksize format

Rated power kW (hp)	Suitable for Basic Line Module in booksize format Type 6SL3130...	**Line contactor** Type	**Output coupling device for line contactor** Article No.	**Main switch** Article No.
Line voltage 380 ... 480 V 3 AC				
20 (25)	1TE22-0AA0	**3RT1035**	**3TX7004-1LB00**	**3LD2504-0TK51**
40 (60)	1TE24-0AA0	**3RT1045**	**3TX7004-1LB00**	**3LD2704-0TK51**
100 (125)	1TE31-0AA0	**3RT1056**	**3TX7004-1LB00**	**3KA5530-1GE01**

Rated power kW (hp)	Suitable for Basic Line Module in booksize format Type 6SL3130...	**Circuit breaker IEC 60947** Article No.	**Circuit breaker UL489/CSA C22.2 No. 5-02** Article No.	**Fuse-switch disconnector** Article No.
Line voltage 380 ... 480 V 3 AC				
20 (25)	1TE22-0AA0	**3RV1041-4JA10**	**3VL2506-2KN30-....** *)	**3NP1123-1CA20**
40 (60)	1TE24-0AA0	**3VL2710-1DC33-....** *)	**3VL2510-2KN30-....** *)	**3NP1123-1CA20**
100 (125)	1TE31-0AA0	**3VL3725-1DC36-....** *)	**3VL3125-2KN30-....** *)	**3NP1143-1DA20**

Rated power kW (hp)	Suitable for Basic Line Module in booksize format Type 6SL3130...	**Switch disconnector with fuse holders** Article No.	**LV HRC fuse (gL/gG)**			**UL/CSA fuse, Class J** [1] Available from: Mersen www.ep.mersen.com		
			Rated current	Size	Article No.	Rated current	Size mm (in)	Reference No.
Line voltage 380 ... 480 V 3 AC								
20 (25)	1TE22-0AA0	**3KL5230-1GB01**	63 A	000	**3NA3822**	60 A	27 × 60 (1.06 × 2.36)	AJT60
40 (60)	1TE24-0AA0	**3KL5230-1GB01**	100 A	000	**3NA3830**	100 A	29 × 117 (1.14 × 4.61)	AJT100
100 (125)	1TE31-0AA0	**3KL5730-1GB01**	250 A	1	**3NA3144**	250 A	54 × 181 (2.13 × 7.13)	AJT250

[1] Not suitable for 3NP and 3KL switch disconnectors.

*) See Catalog LV 10 for Article No. supplements.

© Siemens AG 2017

Design

Single Motor Modules in booksize compact format

The Single Motor Modules in booksize compact format feature the following connections and interfaces as standard:

- 2 DC link connections via integrated DC link busbars
- 1 electronics power supply connection via integrated 24 V DC bars
- 3 DRIVE-CLiQ sockets
- 1 motor connection via connector
- 1 Safe Stop input
- 1 safe motor brake control
- 1 temperature sensor input for KTY84-130, Pt1000 or PTC (Pt1000 can be used from firmware V4.7 HF17)
- 2 PE (protective earth) connections

The status of the Motor Modules is indicated via two multi-color LEDs.

The shield of the motor cable is routed over the connector to the motor connection.

The signal cable shield can be connected to the Motor Module by means of a terminal element, e.g. Weidmüller type KLBÜ 3-8 SC.

The scope of supply of the Motor Modules includes:

- DRIVE-CLiQ cable (length depends on module width) to connect Motor Module to an adjacent Motor Module, length 0.11 m (4.33 in) for 50 mm (1.97 in) wide Motor Modules or length 0.16 m (6.3 in) for 75 mm (2.95 in) wide Motor Modules.
- 2 blanking plugs for sealing unused DRIVE-CLiQ sockets
- Jumper for connecting the 24 V DC busbar to the adjacent Motor Module
- Connector X21
- Connector X11 for motor brake connection
- Connector X1 for motor connection
- 1 set of warning labels in 30 languages

© Siemens AG 2017

Integration

The Single Motor Module receives its control information via DRIVE-CLiQ from:

- CU320-2 Control Unit
- SINUMERIK 840D sl with
  - NCU 710.3B PN
  - NCU 720.3B PN
  - NCU 730.3B PN
  - Numeric Control Extensions NX10.3/NX15.3
- SIMOTION D

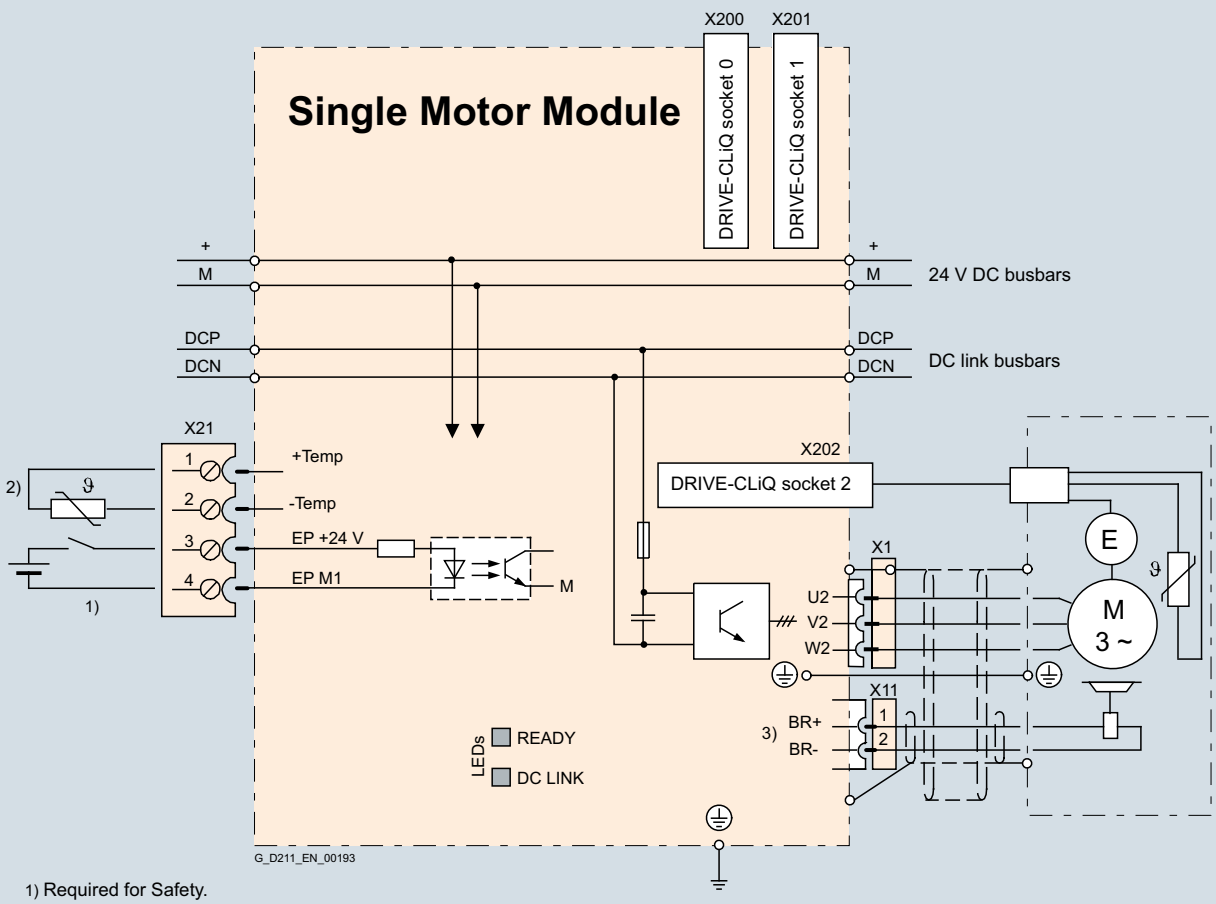

1) Required for Safety.
2) Temperature sensor terminal for motors without DRIVE-CLiQ interface.
3) The braking signal has an integrated overvoltage protection.
An external circuit of the holding brake is not necessary.

Connection example of Single Motor Module in booksize compact format

© Siemens AG 2017

Selection and ordering data

Rated output current A	Type rating [3] kW (hp)	**Single Motor Module in booksize compact format** Article No.
DC link voltage 510 ... 720 V DC		
3	1.6 (1.5)	**6SL3420-1TE13-0AA1**
5	2.7 (3)	**6SL3420-1TE15-0AA1**
9	4.8 (5)	**6SL3420-1TE21-0AA1**
18	9.7 (10)	**6SL3420-1TE21-8AA1**

Description	Article No.
Accessories	
DC link rectifier adapter For direct infeed of DC link voltage Screw-type terminals 0.5 ... 10 mm² For Line Modules and Motor Modules in booksize format with a width of 50 mm (1.97 in), 75 mm (2.95 in) and 100 mm (3.94 in)	**6SL3162-2BD00-0AA0**
DC link adapter (2 units) For multi-tier configuration Screw-type terminals 35 ... 95 mm² For all Line Modules and Motor Modules in booksize format	**6SL3162-2BM01-0AA0**
24 V terminal adapter For all Line Modules and Motor Modules in booksize format	**6SL3162-2AA00-0AA0**
Spacing bolt (4 units) The mounting depth of modules in booksize compact format is increased when it is mounted on these spacing bolts by such an amount that it can be integrated into a drive line-up in booksize format. 2 spacing bolts are required to mount 50 mm (1.97 in) wide modules, and 4 spacing bolts for 75 mm (2.95 in) wide modules.	**6SL3462-1CC00-0AA0**
Accessories for re-ordering	
24 V jumper For connection of the 24 V busbars (for booksize format)	**6SL3162-2AA01-0AA0**
Warning labels in 30 languages This label set can be glued over the standard German or English labels to provide warnings in other languages. One set of labels is supplied with the devices. One sign in each of the following languages is provided in each set: BG, CN, CZ, DE, DK, EE, ES, FI, FR, GB, GR, HU, IE, IS, IT, JP, KR, LT, LV, MT, NL, NO, PL, PT, RO, RU, SE, SI, SK, TR	**6SL3166-3AB00-0AA0**
Dust protection blanking plugs (50 units) For DRIVE-CLiQ port	**6SL3066-4CA00-0AA0**

Technical specifications

	Single Motor Module in booksize compact format 6SL3420-1TE...
DC link voltage (up to 2000 m (6562 ft) above sea level)	510 ... 720 V DC (line voltage 380 ... 480 V 3 AC)
Output frequency	
• Control mode Servo	0 ... 650 Hz [1) 2)]
• Control mode Vector	0 ... 300 Hz [1)]
• Control mode V/f	0 ... 600 Hz [1) 2)]
Electronics power supply	24 V DC -15 %/+20 %
Type of cooling	Internal air cooling (power units with increased air cooling by built-in fan)
Permissible ambient and coolant temperature (air) during operation for line-side components, Line Modules and Motor Modules	0 ... 40 °C (32 ... 104 °F) without derating, > 40 ... 55 °C (104 ... 131 °F), see derating characteristics
Installation altitude	Up to 1000 m (3281 ft) above sea level without derating, > 1000 ... 4000 m (3281 ... 13124 ft) above sea level, see derating characteristics
Declarations of conformity	CE (Low Voltage and EMC Directives)
Certificate of suitability	UL-recognized
Safety Integrated	Safety Integrity Level 2 (SIL 2) acc. to IEC 61508, Performance Level d (PL d) acc. to ISO 13849-1 and Control Category 3 acc. to ISO 13849-1 or EN 954-1 For further information, see section Safety Integrated..

1) Note the correlation between max. output frequency, pulse frequency and current derating. For further information, see section configuration notes.

2) The output frequency is currently limited to 550 Hz. The specified values apply to systems with license for high output frequency.
For further information, see section Control Units and https://support.industry.siemens.com/cs/document/104020669

3) Nominal hp ratings based on asynchronous (induction) motors. Match the motor nameplate current for specific sizing.

© Siemens AG 2017

Technical specifications

DC link voltage 510 ... 720 V DC		**Single Motor Module in booksize compact format**			
Internal air cooling		6SL3420-1TE13-0AA1	6SL3420-1TE15-0AA1	6SL3420-1TE21-0AA1	6SL3420-1TE21-8AA1
Output current					
• Rated current I_{rated}	A	3	5	9	18
• Base-load current I_H	A	2.6	4.3	7.7	15.3
• For S6 duty (40 %) I_{S6}	A	3.5	6	10	24
• I_{max}	A	9	15	27	54
Type rating [1]					
• Based on I_{rated}	kW (hp)	1.6 (1.5)	2.7 (3)	4.8 (5)	9.7 (10)
• Based on I_H	kW (hp)	1.4 (1)	2.3 (2.5)	4.1 (5)	8.2 (10)
Rated pulse frequency	kHz	8	8	4	4
DC link current I_d [2]	A	3.6	6	11	22
Current carrying capacity					
• DC link busbars	A	100	100	100	100
• 24 V DC busbars [3]	A	20	20	20	20
DC link capacitance	µF	110	110	110	235
Current requirement At 24 V DC, max.	A	0.85	0.85	0.85	0.85
Power loss	kW	0.07	0.1	0.1	0.18
Cooling air requirement	m^3/s (ft^3/s)	0.008 (0.3)	0.008 (0.3)	0.008 (0.3)	0.008 (0.3)
Sound pressure level L_{pA} (1 m)	dB	<60	<60	<60	<60
Motor connection U2, V2, W2		Connector (X1) with screw-type terminals	Connector (X1) with screw-type terminals	Connector (X1) with screw-type terminals	Connector (X1) with screw-type terminals
• Conductor cross-section	mm^2	0.2 ... 6	0.2 ... 6	0.2 ... 6	0.2 ... 6
Shield connection		Integrated in connector (X1)	Integrated in connector (X1)	Integrated in connector (X1)	Integrated in connector (X1)
PE connection		M5 screw	M5 screw	M5 screw	M5 screw
Motor brake connection		Connector (X11), 24 V DC, 2 A	Connector (X11), 24 V DC, 2 A	Connector (X11), 24 V DC, 2 A	Connector (X11), 24 V DC, 2 A
Motor cable length, max.					
• Shielded	m (ft)	50 (164)	50 (164)	50 (164)	70 (230)
• Unshielded	m (ft)	75 (246)	75 (246)	75 (246)	100 (328)
Degree of protection		IP20	IP20	IP20	IP20
Dimensions					
• Width	mm (in)	50 (1.97)	50 (1.97)	50 (1.97)	75 (2.95)
• Height	mm (in)	270 (10.63)	270 (10.63)	270 (10.63)	270 (10.63)
• Depth	mm (in)	226 (8.90)	226 (8.90)	226 (8.90)	226 (8.90)
Weight, approx.	kg (lb)	2.7 (5.95)	2.7 (5.95)	2.7 (5.95)	3.4 (7.50)

[1] Rated power of a typical standard asynchronous (induction) motor at 600 V DC link voltage.

[2] Rated DC link current for dimensioning an external DC connection. For DC link current calculation for dimensioning the Line Module, see section configuration notes.

[3] If, due to a number of Line Modules and Motor Modules being mounted side-by-side, the current carrying capacity exceeds 20 A, an additional 24 V DC connection using a 24 V terminal adapter is required (max. cross-section 6 mm^2, max. fuse protection 20 A).

[4] Power loss of Motor Module at rated power including losses of 24 V DC electronics power supply.

© Siemens AG 2017

Characteristic curves

Overload capability

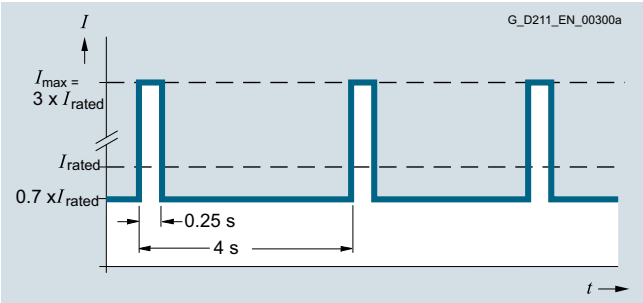

Peak current duty cycle with previous load (300 % overload)

Note:

I_{max} stands for 2 × I_{rated} in the following overload characteristics.

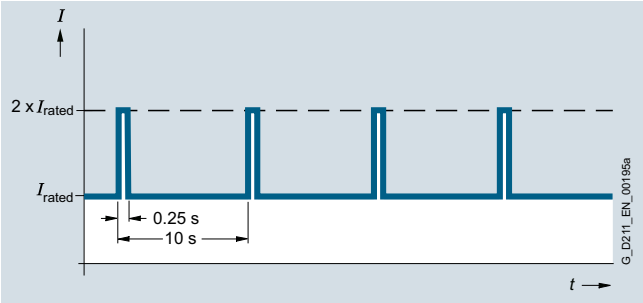

Duty cycle with previous load

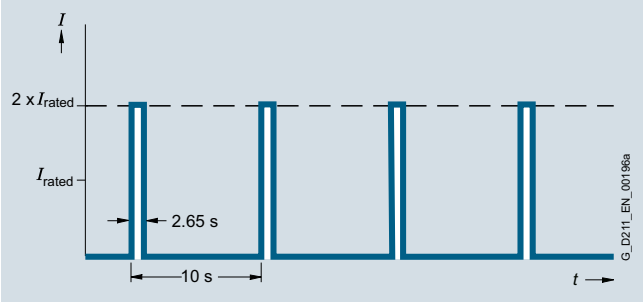

Duty cycle without previous load

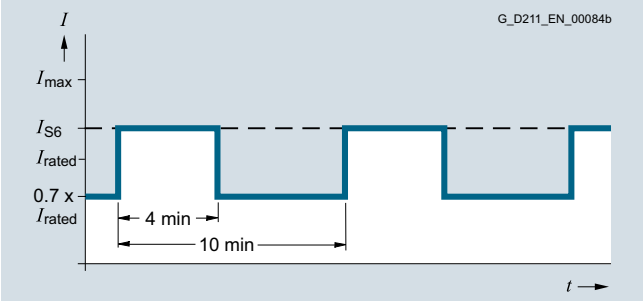

S6 duty cycle with previous load with a duty cycle duration of 600 s

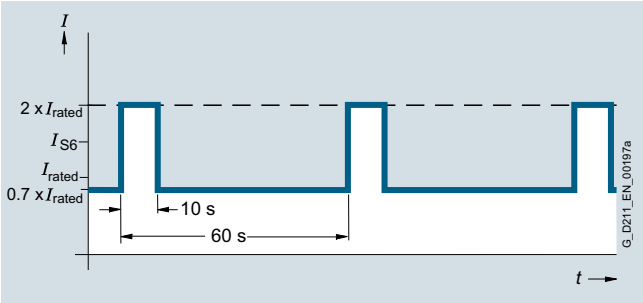

S6 duty cycle with previous load with a duty cycle duration of 60 s

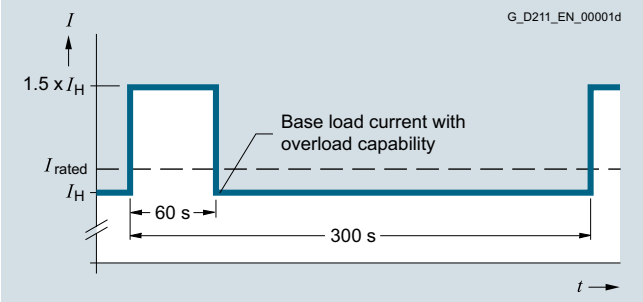

Duty cycle with 60 s overload with a duty cycle duration of 300 s

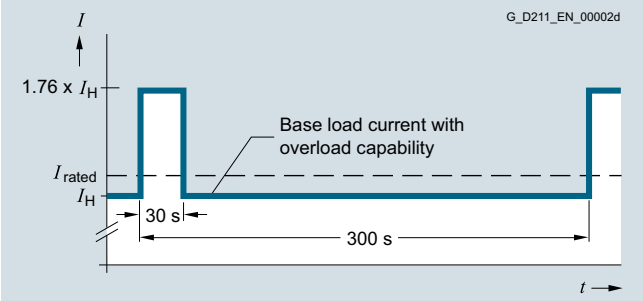

Duty cycle with 30 s overload with a duty cycle duration of 300 s

© Siemens AG 2017

Characteristic curves (continued)

Derating characteristics

3 A and 5 A Single Motor Modules in booksize compact format

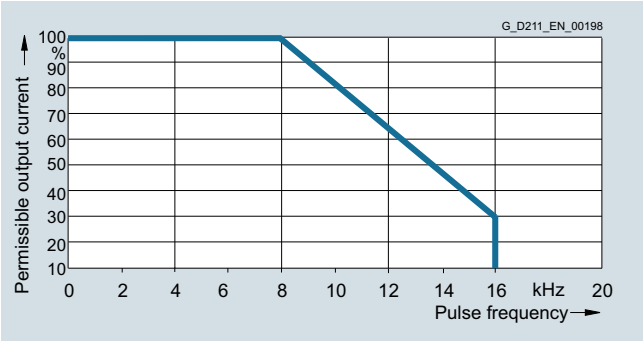

Output current as a function of pulse frequency

9 A and 18 A Single Motor Modules in booksize compact format

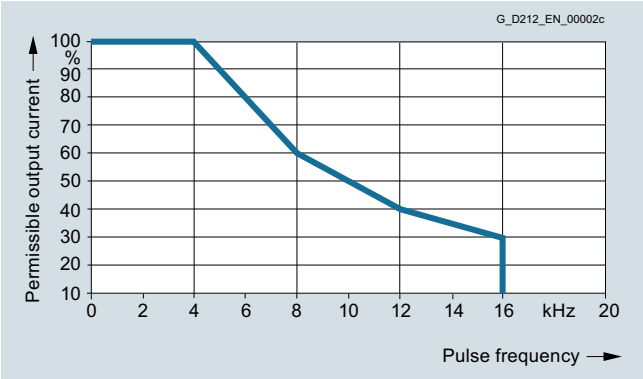

Output current as a function of pulse frequency

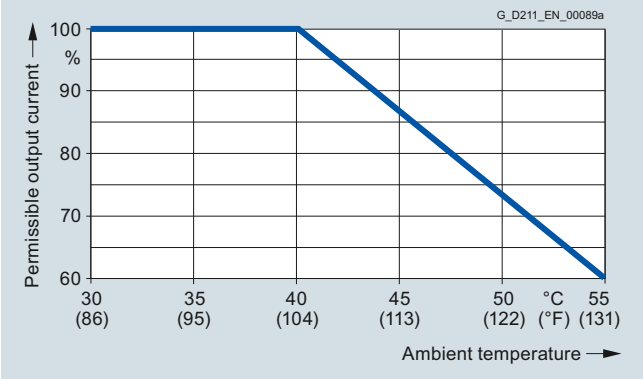

Output current as a function of ambient temperature

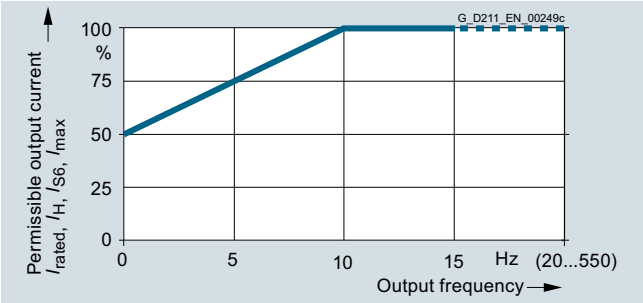

Output current as a function of output frequency

Installation altitude

- >1000 ... 4000 m (3281 ... 13124 ft) above sea level
  - Reduction of the output current by 10 % per 1000 m (3281 ft), or
  - Reduction of the ambient temperature by 5 °C (41 °F) per 1000 m (3281 ft)
- >2000 ... 4000 m (6562 ... 13124 ft) above sea level
  - Operation on line supply systems with grounded neutral point, or
  - Operation with an isolating transformer with secondary grounded neutral point

© Siemens AG 2017

Design

Single Motor Module in booksize format C/D types, 3 A to 30 A

The Single Motor Modules in booksize format feature the following connections and interfaces as standard:

- 2 DC link connections via integrated DC link busbars
- 1 electronics power supply connection via integrated 24 V DC bars
- 3 DRIVE-CLiQ sockets
- 1 motor connection (connector X1 for C/D type is not included in the scope of delivery)
- 1 Safe Stop input
- 1 safe motor brake control
- 1 temperature sensor input for KTY84-130, Pt1000 or PTC (Pt1000 can be used from firmware V4.7 HF17)
- 2 PE (protective earth) connections – a PE connection is integrated in the connector for C/D types

The status of the Motor Modules is indicated via two multi-color LEDs.

The shield is integrated in the housing of 50 mm and 100 mm (1.97 in and 3.94 in) wide Motor Modules, which results in an improved shield connection. A shield connection plate can be supplied for 150 mm, 200 mm and 300 mm (5.91 in, 7.87 in and 11.81 in) wide modules. On these modules, the motor cable shield can be connected using a hose clip.

© Siemens AG 2017

Design (continued)

Motor Modules in booksize format C/D types, 3 A to 30 A

Rated current	3 A	5 A	9 A	18 A	30 A
	D types				
Single Motor Modules	**3 A / 9 A** 50 mm (1.97 in)	**5 A / 15 A** 50 mm (1.97 in)	**9 A / 27 A** 50 mm (1.97 in)	**18 A / 54 A** 50 mm (1.97 in)	**30 A / 90 A** 100 mm (3.94 in)
Double Motor Modules	**2 x 3 A / 9 A** 50 mm (1.97 in)	**2 x 5 A / 15 A** 50 mm (1.97 in)	**2 x 9 A / 27 A** 50 mm (1.97 in)	**2 x 18 A / 54 A** 100 mm (3.94 in)	–
Rated current / maximum current in A 50 mm (1.97 in) or 100 mm (3.94 in) widths			**C types**		
			Single Motor Modules	**18 A / 36 A** 50 mm (1.97 in)	**30 A / 56 A** 100 mm (3.94 in)
			Double Motor Module	**2 x 18 A / 36 A** 100 mm (3.94 in)	–

G_PM21_EN_00266

Overview of available Single Motor Modules in booksize format C/D types

- C type: Optimized for continuous load with up to 200 % overload (continuous motion)
- D type: Optimized for highly dynamic, intermittent duty cycles with up to 300 % overload (discontinuous motion)

Devices in booksize format C/D types are optimized for multi-axis applications and are mounted next to one another. The connection for the common DC link is an integral feature. The device is internally air cooled.

The new Motor Modules in booksize format C/D types have been developed to be fully compatible with the booksize series regarding spare parts. The advantages of this new product include:

- The amount of space required beneath the Motor Modules has been reduced thanks to improvements in the design and a new motor plug connector
- With the new motor plug connector design, the brake conductors and the PE connection are integrated directly in the plug connector
- The motor connections on the Double Motor Module are located side by side, resulting in a significantly improved level of accessibility
- The fan can be simply replaced without having to remove the Motor Module

The signal cable shield can be connected to the Motor Module by means of a shield connection terminal, e.g. Weidmüller type KLBÜ 3-8 SC.

The scope of supply of the Motor Modules includes:

- DRIVE-CLiQ cable appropriate to the width of the Motor Module for connection to the adjacent Motor Module, length = width of Motor Module + 0.06 m (0.20 ft)
- Jumper for connecting the 24 V DC busbar to the adjacent Motor Module
- Connector X21
- Connector X11 for the motor brake connection (for Motor Modules with a rated output current of 45 A to 200 A)
- 2 blanking plugs for sealing unused DRIVE-CLiQ sockets
- Fan insert for the 132 A and 200 A Motor Modules (the voltage for the fan insert is supplied by the Motor Module)
- 1 set of warning labels in 30 languages
- 1 shield connection clamp (for booksize format C/D types)

Selection and ordering data

Rated output current	Type rating [1]	**Single Motor Module in booksize format**		
			C type	**D type**
A	kW (hp)	Article No.	Article No.	Article No.
DC link voltage 510 ... 720 V DC				
3	1.6 (1.5)	–	–	**6SL3120-1TE13-0AD0**
5	2.7 (3)	–	–	**6SL3120-1TE15-0AD0**
9	4.8 (5)	–	–	**6SL3120-1TE21-0AD0**
18	9.7 (10)	–	**6SL3120-1TE21-8AC0**	**6SL3120-1TE21-8AD0**
30	16 (20)	–	**6SL3120-1TE23-0AC0**	**6SL3120-1TE23-0AD0**
45	24 (30)	**6SL3120-1TE24-5AA3**	–	–
60	32 (40)	**6SL3120-1TE26-0AA3**	–	–
85	46 (60)	**6SL3120-1TE28-5AA3**	–	–
132	71 (100)	**6SL3120-1TE31-3AA3**	–	–
200	107 (150)	**6SL3120-1TE32-0AA4**	–	–

[1] Nominal hp ratings based on asynchronous (induction) motors. Match the motor nameplate current for specific sizing.

© Siemens AG 2017

Selection and ordering data (continued)

Description	Article No.
Accessories	
Power connector (X1) with screw-type terminal At Motor Module end, with screw-type terminals 1.5 ... 6 mm² For Motor Modules in booksize format C/D type with rated output current of 3 ... 30 A	**6SL3162-2MA00-0AC0**
Power connector (X1) with push-in connection At Motor Module end, with spring-loaded terminals 1.5 ... 6 mm² For Motor Modules in booksize format C/D type with rated output current of 3 ... 30 A	**6SL3162-2MB00-0AC0**
Shield connection plate For Line Modules and Motor Modules in booksize format with a width of	
• 150 mm (5.91 in)	**6SL3162-1AF00-0AA1**
• 200 mm (7.87 in)	**6SL3162-1AH01-0AA0**
• 300 mm (11.81 in)	**6SL3162-1AH00-0AA0**
DC link rectifier adapter For direct infeed of DC link voltage	
• Screw-type terminals 0.5 ... 10 mm² for Line Modules and Motor Modules in booksize format with a width of 50 mm (1.97 in), 75 mm (2.95 in) and 100 mm (3.94 in)	**6SL3162-2BD00-0AA0**
• Screw-type terminals 35 ... 95 mm² for Line Modules and Motor Modules in booksize format with a width of 150 mm (5.91 in), 200 mm (7.87 in) and 300 mm (11.81 in)	**6SL3162-2BM00-0AA0**
DC link adapter (2 units) For multi-tier configuration Screw-type terminals 35 ... 95 mm² For all Line Modules and Motor Modules in booksize format	**6SL3162-2BM01-0AA0**
24 V terminal adapter For all Line Modules and Motor Modules in booksize format	**6SL3162-2AA00-0AA0**
Reinforced DC link busbar set For replacement of DC link busbars for 5 modules in booksize format with a width of	
• 50 mm (1.97 in)	**6SL3162-2DB00-0AA0**
• 100 mm (3.94 in)	**6SL3162-2DD00-0AA0**
Accessories for re-ordering	
24 V jumper For connection of the 24 V busbars (for booksize format)	**6SL3162-2AA01-0AA0**
Terminal Kit (plug-in terminals, DRIVE-CLiQ jumper (length = module width + 60 mm (2.36 in)), dust protection blanking plugs) For DRIVE-CLiQ port For Motor Modules with a width of	
• 50 mm (1.97 in), C/D type	**6SL3162-8AC00-0AA0**
• 100 mm (3.94 in), C/D type	**6SL3162-8BE00-0AA0**
• 150 mm (5.91 in)	**6SL3162-8CF00-0AA0**
• 200 mm (7.87 in)	**6SL3162-8DH00-0AA0**
• 300 mm (11.81 in)	**6SL3162-8EM00-0AA0**

Description	Article No.
Warning labels in 30 languages This label set can be glued over the standard German or English labels to provide warnings in other languages. One set of labels is supplied with the devices. One sign in each of the following languages is provided in each set: BG, CN, CZ, DE, DK, EE, ES, FI, FR, GB, GR, HU, IE, IS, IT, JP, KR, LT, LV, MT, NL, NO, PL, PT, RO, RU, SE, SI, SK, TR	**6SL3166-3AB00-0AA0**
Dust protection blanking plugs (50 units) For DRIVE-CLiQ port	**6SL3066-4CA00-0AA0**
Replacement fan For Motor Modules with a width of	
• 50 mm (1.97 in), C/D type	**6SL3162-0AN00-0AA0**
• 100 mm (3.94 in), C/D type	**6SL3162-0AP00-0AA0**

Technical specifications

	Single Motor Module in booksize format 6SL3120-1TE...
DC link voltage (up to 2000 m (6562 ft) above sea level)	510 ... 720 V DC (line voltage 380 ... 480 V 3 AC)
Output frequency	
• Control mode Servo	0 ... 650 Hz [1) 2) 3)]
• Control mode Vector	0 ... 300 Hz [2)]
• Control mode V/f	0 ... 600 Hz [2) 3)]
Electronics power supply	24 V DC -15 %/+20 %
Type of cooling	Internal air cooling (power units with increased air cooling by built-in fan)
Permissible ambient and coolant temperature (air) during operation for line-side components, Line Modules and Motor Modules	0 ... 40 °C (32 ... 104 °F) without derating, > 40 ... 55 °C (104 ... 131 °F), see derating characteristics
Installation altitude	Up to 1000 m (3281 ft) above sea level without derating, > 1000 ... 4000 m (3281 ... 13124 ft) above sea level, see derating characteristics
Declarations of conformity	CE (Low Voltage and EMC Directives)
Certificate of suitability	cULus
Safety Integrated	Safety Integrity Level 2 (SIL 2) according to IEC 61508, Performance Level d (PL d) and Category 3 according to EN ISO 13849-1 For further information, see section Safety Integrated.

1) At rated output current (max. output frequency 1300 Hz for 62.5 µs current control cycle, 8 kHz pulse frequency, 60 % permissible output current).

2) Note the correlation between max. output frequency, pulse frequency and current derating. For further information, see section configuration notes.

3) The output frequency is currently limited to 550 Hz. The specified values apply to systems with license for high output frequency.
For further information, see section Control Units and https://support.industry.siemens.com/cs/document/104020669

© Siemens AG 2017

Technical specifications (continued)

DC link voltage 510 ... 720 V DC		Single Motor Module in booksize format				
Internal air cooling C type	6SL3120-...	–	–	–	1TE21-8AC0	1TE23-0AC0
Internal air cooling D type	6SL3120-...	1TE13-0AD0	1TE15-0AD0	1TE21-0AD0	1TE21-8AD0	1TE23-0AD0
Output current						
• Rated current I_{rated}	A	**3**	**5**	**9**	**18**	**30**
• Base-load current I_H	A	2.6	4.3	7.7	15.3	25.5
• For S6 duty (40 %) I_{S6}						
- C type	A	–	–	–	24	40
- D type	A	4	6.7	12	24	40
• I_{max}						
- C type	A	–	–	–	36	56
- D type	A	9	15	27	54	90
Type rating [1]						
• Based on I_{rated}	kW (hp)	1.6 (1.5)	2.7 (3)	4.8 (5)	9.7 (10)	16 (20)
• Based on I_H	kW (hp)	1.4 (1)	2.3 (2.5)	4.1 (5)	8.2 (10)	13.7 (18)
Rated pulse frequency	kHz	4	4	4	4	4
DC link current I_d [2]	A	3.6	6	11	22	36
Current carrying capacity						
• DC link busbars	A	100 [3]	100 [3]	100 [3]	100 [3]	100 [3]
• 24 V DC busbars [4]	A	20	20	20	20	20
DC link capacitance	µF	110	110	110	220	705
Current requirement At 24 V DC, max.	A	0.75	0.75	0.75	0.75	0.8
Power loss [5] typ. [6] / max.	kW	0.03/0.05	0.04/0.07	0.06/0.1	0.14/0.19	0.26/0.31
Cooling air requirement	m^3/s (ft^3/s)	0.009 (0.3)	0.009 (0.3)	0.009 (0.3)	0.009 (0.3)	0.0155 (0.5)
Sound pressure level L_{pA} (1 m)	dB	<60	<60	<60	<60	<60
Motor connection U2, V2, W2		Plug connector (X1) [7], 1.5 ... 6 mm^2	Plug connector (X1) [7], 1.5 ... 6 mm^2	Plug connector (X1) [7], 1.5 ... 6 mm^2	Plug connector (X1) [7], 1.5 ... 6 mm^2	Plug connector (X1) [7], 1.5 ... 6 mm^2
PE connection		M5 screw	M5 screw	M5 screw	M5 screw	M5 screw
Motor brake connection		Integrated into the plug-in motor connector (X1), 24 V DC, 2 A	Integrated into the plug-in motor connector (X1), 24 V DC, 2 A	Integrated into the plug-in motor connector (X1), 24 V DC, 2 A	Integrated into the plug-in motor connector (X1), 24 V DC, 2 A	Integrated into the plug-in motor connector (X1), 24 V DC, 2 A
Motor cable length, max.						
• Shielded	m (ft)	50 (164)	50 (164)	50 (164)	70 (230)	100 (328)
• Unshielded	m (ft)	75 (246)	75 (246)	75 (246)	100 (328)	150 (492)
Degree of protection		IP20	IP20	IP20	IP20	IP20
Dimensions						
• Width	mm (in)	50 (1.97)	50 (1.97)	50 (1.97)	50 (1.97)	100 (3.94)
• Height	mm (in)	380 (14.96)	380 (14.96)	380 (14.96)	380 (14.96)	380 (14.96)
• Depth	mm (in)	270 (10.6)	270 (10.6)	270 (10.6)	270 (10.6)	270 (10.6)
Weight, approx.	kg (lb)	4.6 (10.14)	4.6 (10.14)	4.6 (10.14)	4.6 (10.14)	7.9 (17.4)

1) Rated power of a typical standard asynchronous (induction) motor at 600 V DC link voltage.

2) Rated DC link current for dimensioning an external DC connection.

3) With reinforced DC link busbar set, 150 A is possible (accessories).

4) If, due to a number of Line Modules and Motor Modules being mounted side-by-side, the current carrying capacity exceeds 20 A, an additional 24 V DC connection using a 24 V terminal adapter is required (max. cross-section 6 mm^2, max. fuse protection 20 A).

5) Power loss of Motor Module at rated power including losses of 24 V DC electronics power supply.

6) At max. motor cable length 30 m (98.43 ft), pulse frequency 4 kHz and DC link voltage 540 ... 600 V.

7) Connector not included in scope of supply, see Accessories.

© Siemens AG 2017

Technical specifications (continued)

DC link voltage 510 ... 720 V DC		Single Motor Module in booksize format				
Internal air cooling	6SL3120-...	1TE24-5AA3	1TE26-0AA3	1TE28-5AA3	1TE31-3AA3	1TE32-0AA4
Output current						
• Rated current I_{rated}	A	**45**	**60**	**85**	**132**	**200**
• Base-load current I_H	A	38	52	68	105	141
• For S6 duty (40 %) I_{S6}	A	60	80	110	150	230
• I_{max}	A	85	113	141	210	282
Type rating [1]						
• Based on I_{rated}	kW (hp)	24 (30)	32 (40)	46 (60)	71 (100)	107 (150)
• Based on I_H	kW (hp)	21 (25)	28 (40)	37 (50)	57 (75)	76 (100)
Rated pulse frequency	kHz	4	4	4	4	4
DC link current I_d [2]	A	54	72	102	158	200
Current carrying capacity						
• DC link busbars	A	200	200	200	200	200
• 24 V DC busbars [3]	A	20	20	20	20	20
DC link capacitance	µF	1175	1410	1880	2820	3995
Current requirement At 24 V DC, max.	A	1.2	1.2	1.5	1.5	1.5
Power loss [4] typ. [5] / max.	kW	0.38/0.46	0.55/0.62	0.77/0.79	1.26/1.29	2.03/2.09
Cooling air requirement	m^3/s (ft^3/s)	0.031 (1.1)	0.031 (1.1)	0.044 (1.6)	0.144 (5.1)	0.144 (5.1)
Sound pressure level L_{pA} (1 m)	dB	<65	<65	<60	<73	<73
Motor connection U2, V2, W2		M6 screw studs (X1)	M6 screw studs (X1)	M8 Screw studs (X1)	M8 Screw studs (X1)	M8 Screw studs (X1)
• Conductor cross-section, max.	mm^2	2.5 ... 50	2.5 ... 50	2.5 ... 95, 2 × 35	2.5 ... 120, 2 × 50	2.5 ... 120, 2 × 50
Shield connection		See Accessories	See Accessories	See Accessories	See Accessories	See Accessories
PE connection		M6 screw	M6 screw	M6 screw	M8 screw	M8 screw
Motor brake connection		Plug-in connector (X11), 24 V DC, 2 A	Plug-in connector (X11), 24 V DC, 2 A	Plug-in connector (X11), 24 V DC, 2 A	Plug-in connector (X11), 24 V DC, 2 A	Plug-in connector (X11), 24 V DC, 2 A
Motor cable length, max.						
• Shielded	m (ft)	100 (328)	100 (328)	100 (328)	100 (328)	100 (328)
• Unshielded	m (ft)	150 (492)	150 (492)	150 (492)	150 (492)	150 (492)
Degree of protection		IP20	IP20	IP20	IP20	IP20
Dimensions						
• Width	mm (in)	150 (5.91)	150 (5.91)	200 (7.87)	300 (11.8)	300 (11.8)
• Height	mm (in)	380 (14.96)	380 (14.96)	380 (14.96)	380 (14.96)	380 (14.96)
- With fan [6]	mm (in)	–	–	–	629 (24.8)	629 (24.8)
• Depth	mm (in)	270 (10.6)	270 (10.6)	270 (10.6)	270 (10.6)	270 (10.6)
Weight, approx.	kg (lb)	9 (19.9)	9 (19.9)	15 (33.1)	21 (46.3)	21 (46.3)

[1] Rated power of a typical standard asynchronous (induction) motor at 600 V DC link voltage.

[2] Rated DC link current for dimensioning an external DC connection.

[3] If, due to a number of Line Modules and Motor Modules being mounted side-by-side, the current carrying capacity exceeds 20 A, an additional 24 V DC connection using a 24 V terminal adapter is required (max. cross-section 6 mm^2, max. fuse protection 20 A).

[4] Power loss of Motor Module at rated power including losses of 24 V DC electronics power supply.

[5] At max. motor cable length 30 m (98.43 ft), pulse frequency 4 kHz and DC link voltage 540 ... 600 V.

[6] The fan is supplied with the Motor Module and must be installed before the Motor Module is commissioned.

© Siemens AG 2017

Integration

The Single Motor Module receives its control information via DRIVE-CLiQ from:

- CU320-2 Control Unit
- SINUMERIK 840D sl with
  - NCU 710.3B PN
  - NCU 720.3B PN
  - NCU 730.3B PN
  - Numeric Control Extensions NX10.3/NX15.3
- SIMOTION D

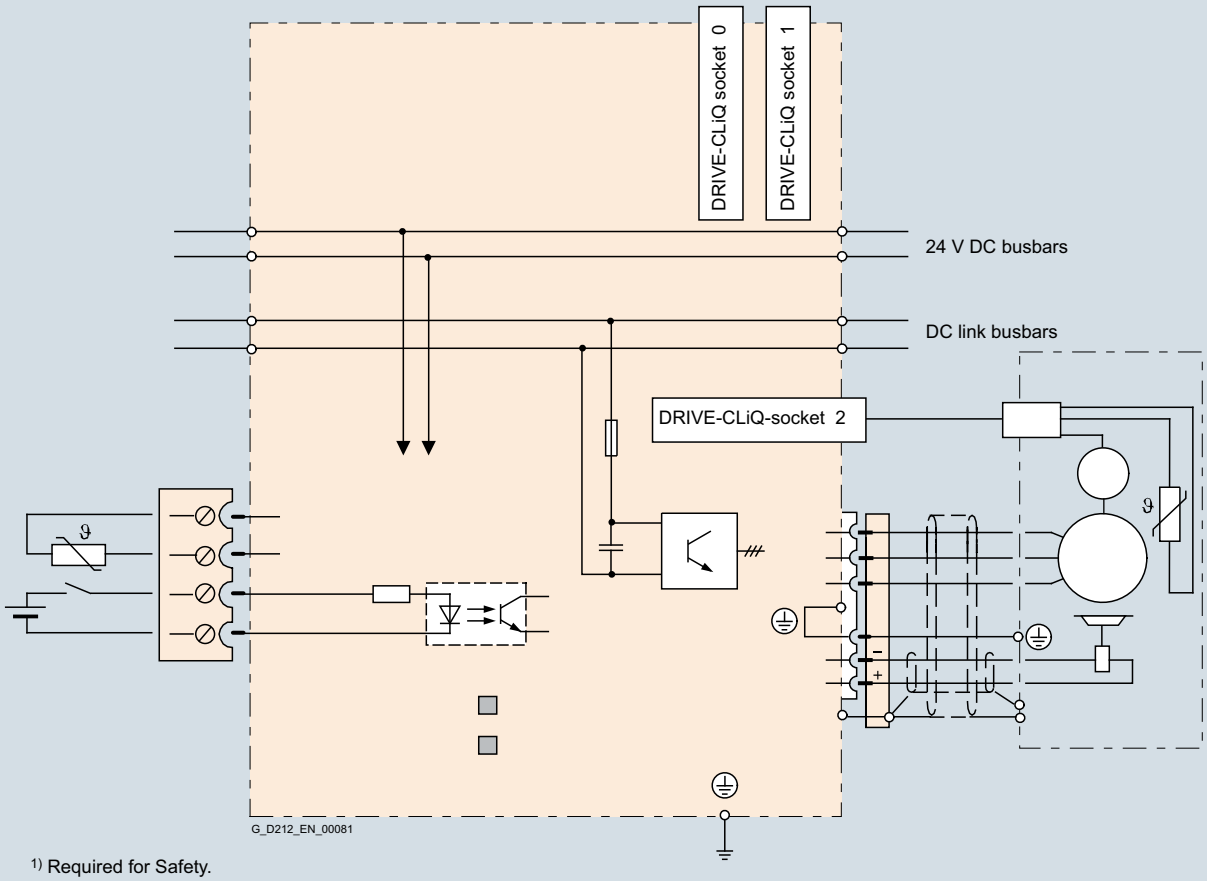

[1] Required for Safety.
[2] Temperature sensor terminal for motors without DRIVE-CLiQ interface.
[3] The braking signal has an integrated overvoltage protection.
An external circuit of the holding brake is not necessary.

Connection example of Single Motor Modules in booksize format C/D types, 3 A to 30 A

© Siemens AG 2017

Integration (continued)

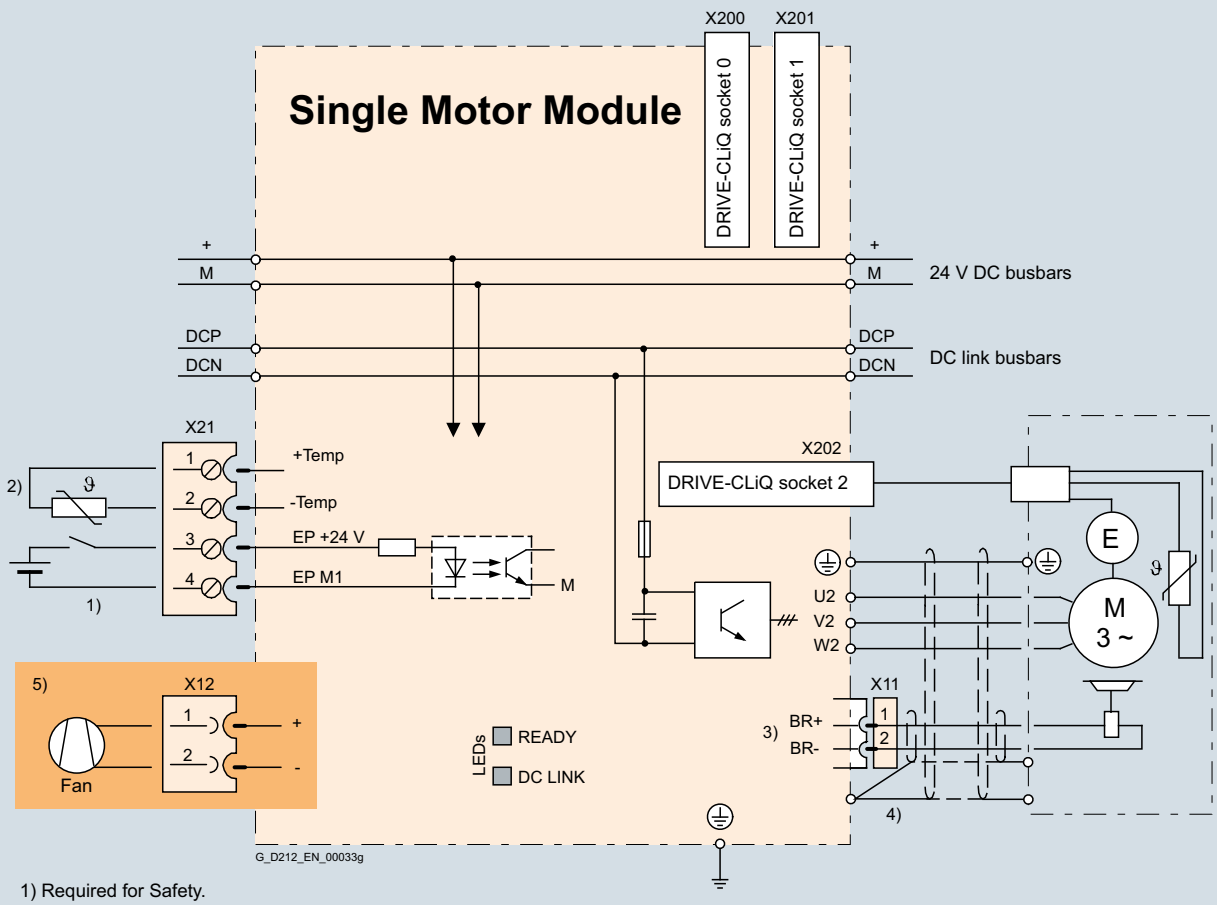

1) Required for Safety.
2) Temperature sensor terminal for motors without DRIVE-CLiQ interface.
3) The braking signal has an integrated overvoltage protection.
An external circuit of the holding brake is not necessary.
4) Contacting via shield plate.
5) Fan insert for 132 A and 200 A Single Motor Modules.
The fan insert is supplied with the Single Motor Module.

Connection example of Single Motor Modules in booksize format, 45 A to 200 A

© Siemens AG 2017

Characteristic curves

Overload capability

Motor Modules in booksize format C type and booksize format 45 A to 200 A

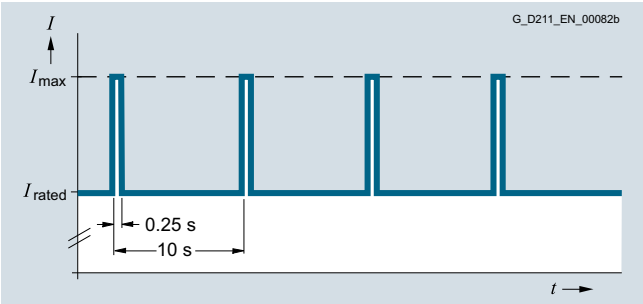

Duty cycle with previous load

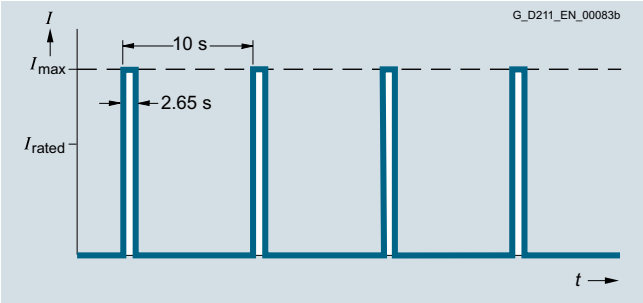

Duty cycle without previous load

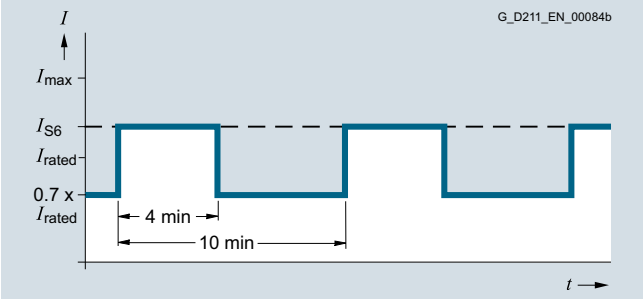

S6 duty cycle with previous load with a duty cycle duration of 600 s

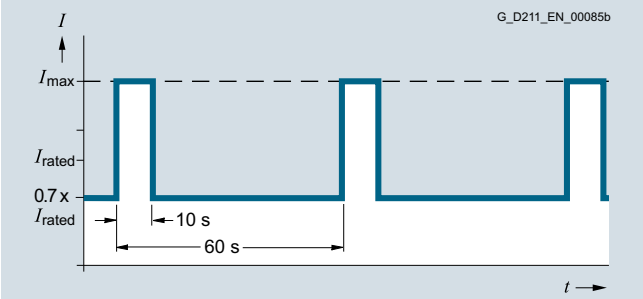

S6 duty cycle with previous load with a duty cycle duration of 60 s

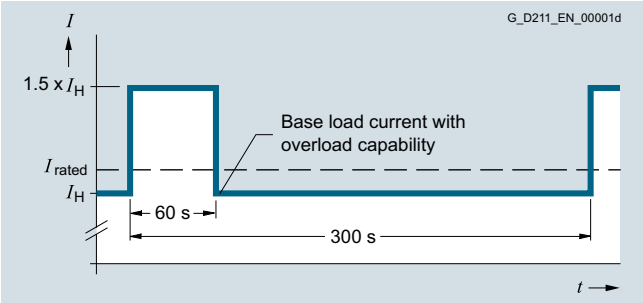

Duty cycle with 60 s overload with a duty cycle duration of 300 s

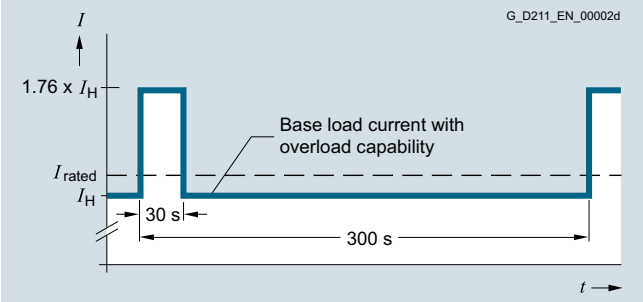

Duty cycle with 30 s overload with a duty cycle duration of 300 s

© Siemens AG 2017

Characteristic curves (continued)

Motor Modules in booksize format D type

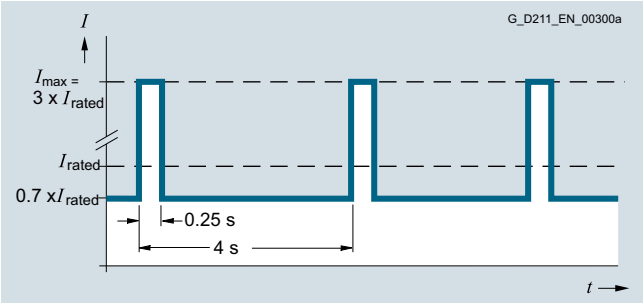

Peak current duty cycle with previous load (300 % overload)

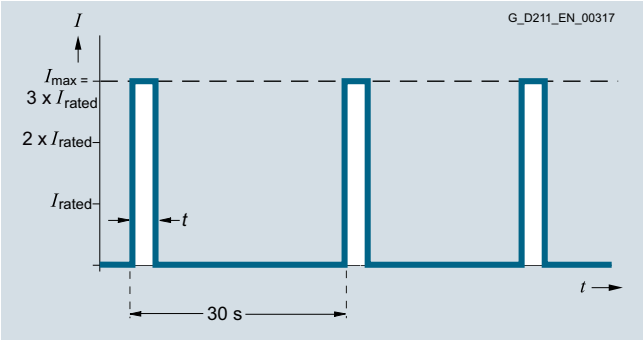

Peak current duty cycle without previous load (300 % overload)

Single Motor Module	Time t at I_{max}
3 A	0.5 s
5 A	0.5 s
9 A	0.5 s
18 A	1.25 s
30 A	3 s

This duty cycle is only permissible for pulse frequencies up to 8 kHz. The current must be derated for pulse frequencies of > 4 kHz.

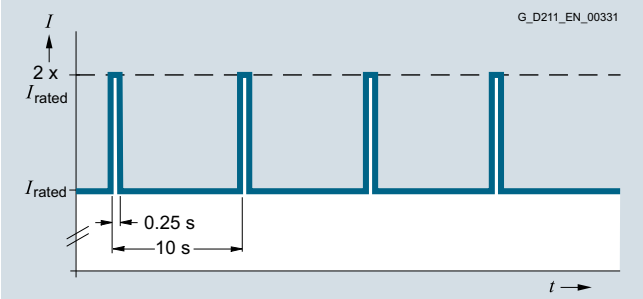

Duty cycle with previous load

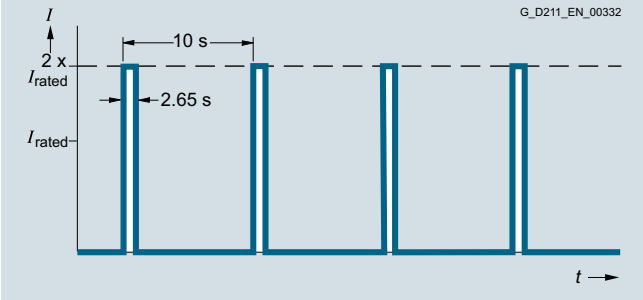

Duty cycle without previous load

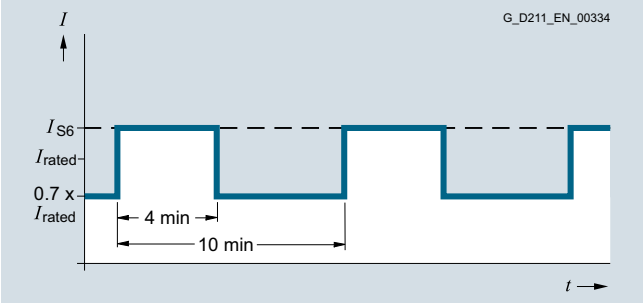

S6 duty cycle with previous load with a duty cycle duration of 600 s

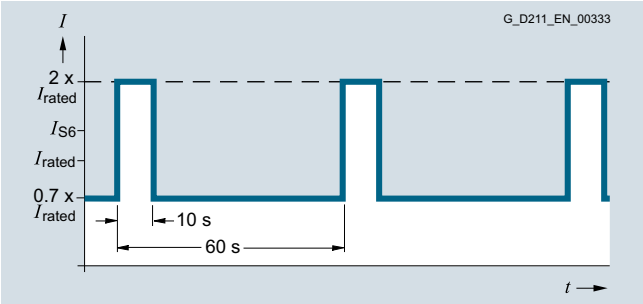

S6 duty cycle with previous load with a duty cycle duration of 60 s

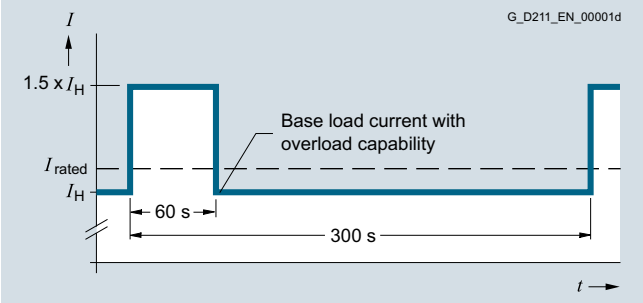

Duty cycle with 60 s overload with a duty cycle duration of 300 s

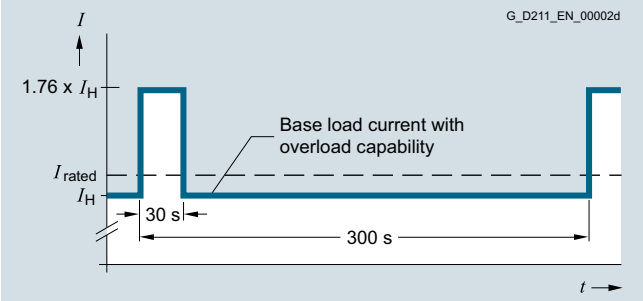

Duty cycle with 30 s overload with a duty cycle duration of 300 s

© Siemens AG 2017

Characteristic curves (continued)

Derating characteristics

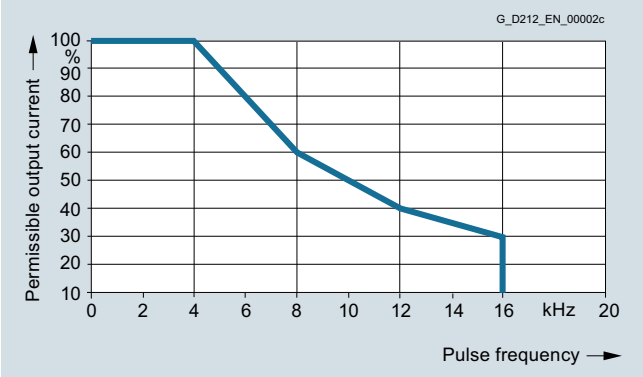

Output current as a function of pulse frequency (rated current up to 132 A for Single Motor Modules in booksize format)

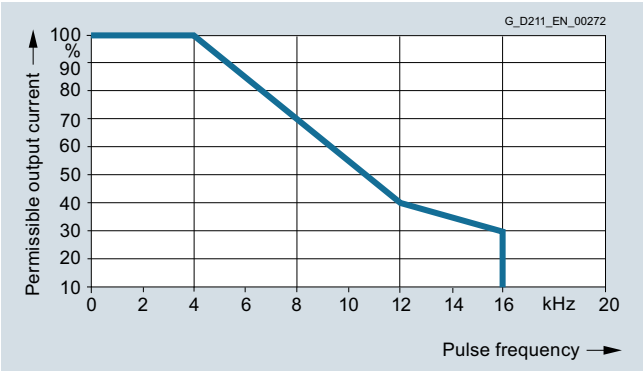

Output current as a function of pulse frequency (rated current up to 200 A for Single Motor Modules in booksize format)

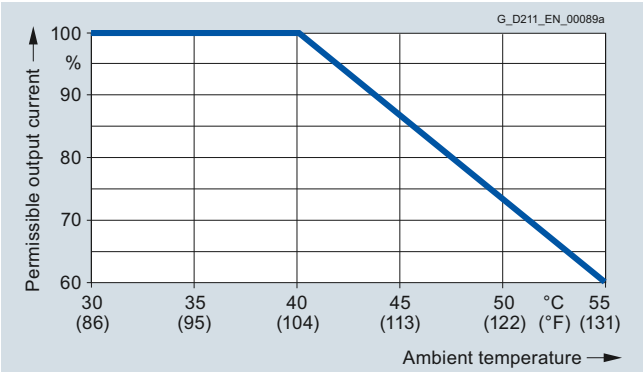

Output current as a function of ambient temperature

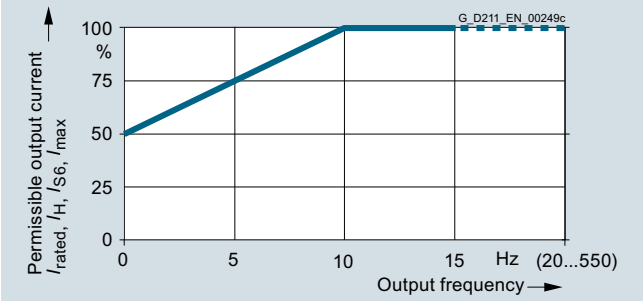

Output current as a function of output frequency (Single Motor Modules in booksize format, 45 A to 200 A)

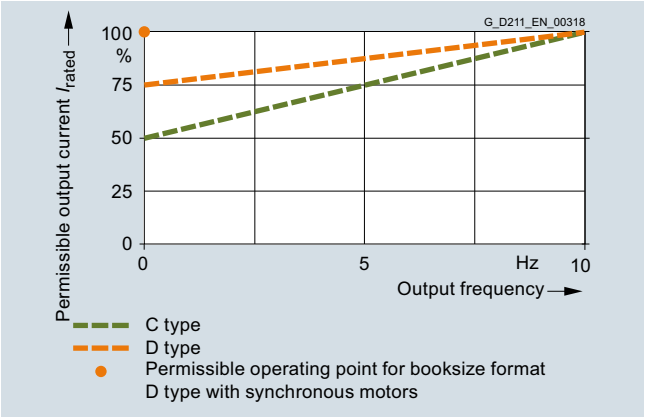

Output current at low output frequencies
(Single Motor Modules in booksize format C/D types, 3 A to 30 A)

Installation altitude

- >1000 ... 4000 m (3281 ... 13124 ft) above sea level
  - Reduction of the output current by 10 % per 1000 m (3281 ft), or
  - Reduction of the ambient temperature by 5 °C (41 °F) per 1000 m (3281 ft)
- >2000 ... 4000 m (6562 ... 13124 ft) above sea level
  - Operation on line supply systems with grounded neutral point, or
  - Operation with an isolating transformer with secondary grounded neutral point

© Siemens AG 2017

Design

Double Motor Module in booksize compact format

Double Motor Modules feature the following connections and interfaces as standard:

- 2 DC link connections via integrated DC link busbars
- 2 electronics power supply connections via integrated 24 V DC busbars
- 4 DRIVE-CLiQ sockets
- 2 motor connections via connector
- 2 safe standstill inputs (1 input per axis)
- 2 safe motor brake controls
- 2 temperature sensor inputs for KTY84-130, Pt1000 or PTC (Pt1000 can be used from firmware V4.7 HF17)
- 3 PE (protective earth) connections

The status of the Motor Modules is indicated via two multi-color LEDs.

The shield of the motor cables is routed over the connectors to the motor connection.

The signal cable shield can be connected to the Motor Module by means of a shield connection terminal, e.g. Weidmüller type KLBÜ 3-8 SC.

The scope of supply of the Motor Modules includes:

- DRIVE-CLiQ cable for connecting to the adjacent Motor Module, length 0.16 m (6.3 in)
- 2 blanking plugs for sealing unused DRIVE-CLiQ sockets
- Jumper for connecting the 24 V DC busbar to the adjacent Motor Module
- Connectors X21 and X22
- Connectors X1 and X2 for motor connection
- 1 set of warning labels in 30 languages

© Siemens AG 2017

Integration

The Double Motor Module obtains its control information via DRIVE-CLiQ from:

- CU320-2 Control Unit
- SINUMERIK 840D sl with
  - NCU 710.3B PN
  - NCU 720.3B PN
  - NCU 730.3B PN
  - Numeric Control Extensions NX10.3/NX15.3
- SIMOTION D

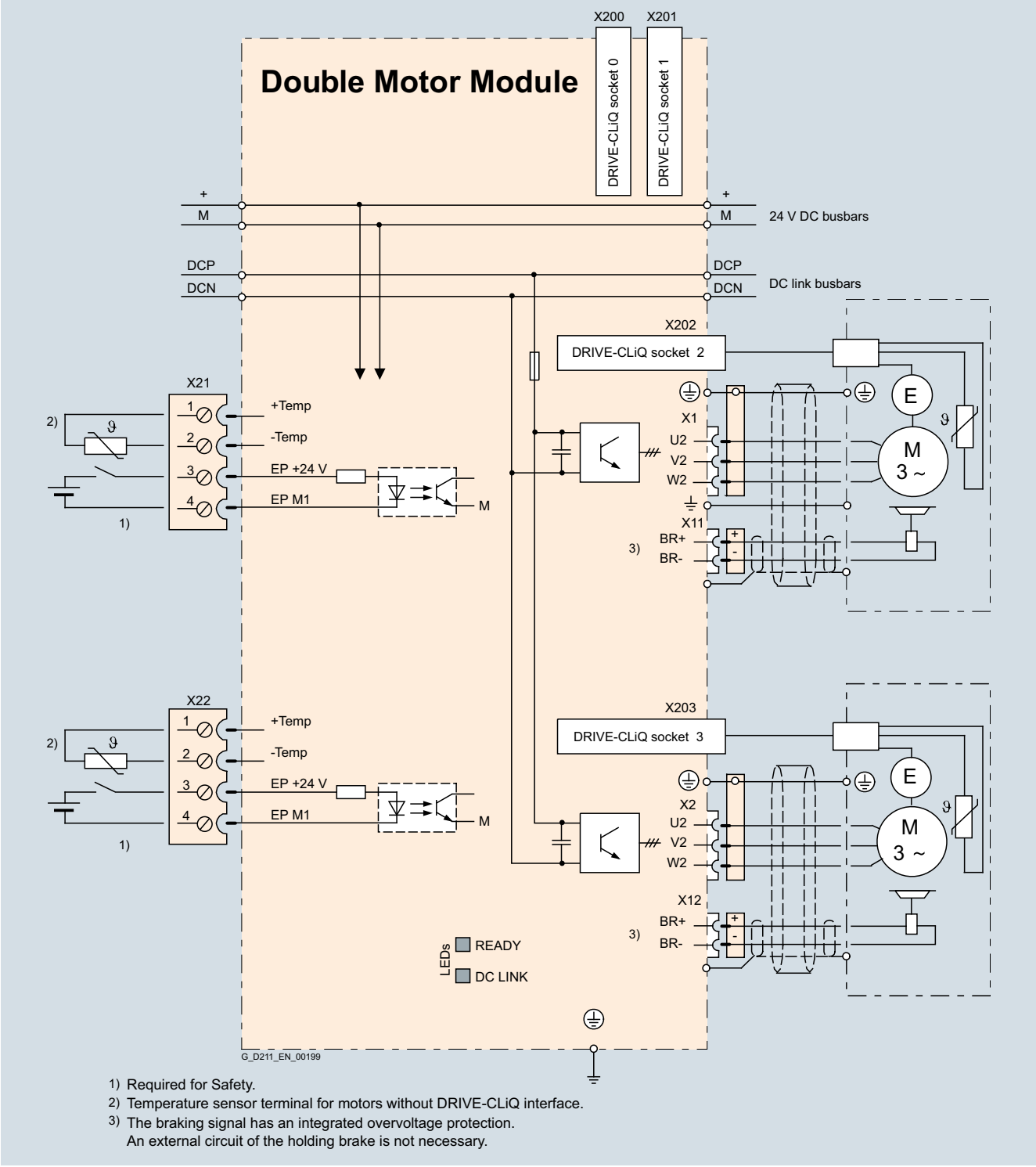

Connection example of Double Motor Modules in booksize compact format, 2 × 3 A to 2 × 18 A

© Siemens AG 2017

Double Motor Modules in booksize compact format

Selection and ordering data

Rated output current A	Type rating [3] kW (hp)	**Double Motor Module in booksize compact format** Article No.
DC link voltage 510 ... 720 V DC		
2 × 1.7 A	2 × 0.9 (2 × 0.75)	**6SL3420-2TE11-7AA1**
2 × 3 A	2 × 1.6 (2 × 1.5)	**6SL3420-2TE13-0AA1**
2 × 5 A	2 × 2.7 (2 × 3)	**6SL3420-2TE15-0AA1**

Description	Article No.
Accessories	
DC link rectifier adapter For direct infeed of DC link voltage Screw-type terminals 0.5 ... 10 mm^2 For Line Modules and Motor Modules in booksize format with a width of 50 mm (1.97 in), 75 mm (2.95 in) and 100 mm (3.94 in)	**6SL3162-2BD00-0AA0**
DC link adapter (2 units) For multi-tier configuration Screw-type terminals 35 ... 95 mm^2 For all Line Modules and Motor Modules in booksize format	**6SL3162-2BM01-0AA0**
24 V terminal adapter For all Line Modules and Motor Modules in booksize format	**6SL3162-2AA00-0AA0**
Spacing bolt (4 units) The mounting depth of modules in booksize compact format is increased when it is mounted on these spacing bolts by such an amount that it can be integrated into a drive line-up in booksize format. 2 spacing bolts are required to mount 50 mm (1.97 in) wide modules, and 4 spacing bolts for 75 mm (2.95 in) wide modules.	**6SL3462-1CC00-0AA0**
Accessories for re-ordering	
24 V jumper For connection of the 24 V busbars (for booksize format)	**6SL3162-2AA01-0AA0**
Warning labels in 30 languages This label set can be glued over the standard German or English labels to provide warnings in other languages. One set of labels is supplied with the devices. One sign in each of the following languages is provided in each set: BG, CN, CZ, DE, DK, EE, ES, FI, FR, GB, GR, HU, IE, IS, IT, JP, KR, LT, LV, MT, NL, NO, PL, PT, RO, RU, SE, SI, SK, TR	**6SL3166-3AB00-0AA0**
Dust protection blanking plugs (50 units) For DRIVE-CLiQ port	**6SL3066-4CA00-0AA0**

Technical specifications

	Double Motor Module in booksize compact format 6SL3420-2TE1...
DC link voltage (up to 2000 m (6562 ft) above sea level)	510 ... 720 V DC (line voltage 380 ... 480 V 3 AC)
Output frequency	
• Control mode Servo	0 ... 650 Hz [1) 2)]
• Control mode Vector	0 ... 300 Hz [1)]
• Control mode V/f	0 ... 600 Hz [1) 2)]
Electronics power supply	24 V DC -15 %/+20 %
Type of cooling	Internal air cooling (power units with increased air cooling by built-in fan)
Permissible ambient and coolant temperature (air) during operation for line-side components, Line Modules and Motor Modules	0 ... 40 °C (32 ... 104 °F) without derating, > 40 ... 55 °C (104 ... 131 °F), see derating characteristics
Installation altitude	Up to 1000 m (3281 ft) above sea level without derating, > 1000 ... 4000 m (3281 ... 13124 ft) above sea level, see derating characteristics
Declarations of conformity	CE (Low Voltage and EMC Directives)
Certificate of suitability	cURus
Safety Integrated	Safety Integrity Level 2 (SIL 2) acc. to IEC 61508, Performance Level d (PL d) acc. to ISO 13849-1 and Control Category 3 acc. to ISO 13849-1 or EN 954-1 For further information, see section Safety Integrated.

[1)] Note the correlation between max. output frequency, pulse frequency and current derating. For further information, see section configuration notes.

[2)] The output frequency is currently limited to 550 Hz. The specified values apply to systems with license for high output frequency.
For further information, see section Control Units and https://support.industry.siemens.com/cs/document/104020669

[3)] Nominal hp ratings based on asynchronous (induction) motors. Match the motor nameplate current for specific sizing.

© Siemens AG 2017

Technical specifications (continued)

DC link voltage 510 ... 720 V DC		**Double Motor Module in booksize compact format**		
Internal air cooling		6SL3420-2TE11-7AA1	6SL3420-2TE13-0AA1	6SL3420-2TE15-0AA1
Output current				
• Rated current I_{rated}	A	2 × 1.7	2 × 3	2 × 5
• For S6 duty (40 %) I_{S6}	A	2 × 2	2 × 3.5	2 × 6
• Base-load current I_H	A	2 × 1.5	2 × 2.6	2 × 4.3
• I_{max}	A	2 × 5.1	2 × 9	2 × 15
Type rating [1]				
• Based on I_{rated}	kW (hp)	2 × 0.9 (0.75)	2 × 1.6 (1.5)	2 × 2.7 (3)
• Based on I_H	kW (hp)	2 × 0.8 (0.5)	2 × 1.4 (1)	2 × 2.3 (2.5)
Rated pulse frequency	kHz	8	8	8
DC link current I_d [2]	A	4.1	7.2	12
Current carrying capacity				
• DC link busbars	A	100	100	100
• 24 V DC busbars [3]	A	20	20	20
DC link capacitance	µF	165	165	165
Current requirement At 24 V DC, max.	A	1	1	1
Power loss [4]	kW	0.11	0.13	0.19
Cooling air requirement	m^3/s (ft^3/s)	0.008 (0.3)	0.008 (0.3)	0.008 (0.3)
Sound pressure level L_{pA} (1 m)	dB	<60	<60	<60
Motor connection U2, V2, W2		2 connectors (X1, X2) with screw-type terminals	2 connectors (X1, X2) with screw-type terminals	2 connectors (X1, X2) with screw-type terminals
• Conductor cross-section	mm^2	0.2 ... 6	0.2 ... 6	0.2 ... 6
Shield connection		Integrated in connector (X1, X2)	Integrated in connector (X1, X2)	Integrated in connector (X1, X2)
PE connection		M5 screw	M5 screw	M5 screw
Motor brake connection		Connector (X11, X12), 24 V DC, 2 A	Connector (X11, X12), 24 V DC, 2 A	Connector (X11, X12), 24 V DC, 2 A
Motor cable length, max.				
• Shielded	m (ft)	50 (164)	50 (164	50 (164)
• Unshielded	m (ft)	75 (246)	75 (246)	75 (246)
Degree of protection		IP20	IP20	IP20
Dimensions				
• Width	mm (in)	75 (2.95)	75 (2.95)	75 (2.95)
• Height	mm (in)	270 (10.63)	270 (10.63)	270 (10.63)
• Depth	mm (in)	226 (8.90)	226 (8.90)	226 (8.90)
Weight, approx.	kg (lb)	3.4 (7.50)	3.4 (7.50)	3.4 (7.50)

[1] Rated power of a typical standard asynchronous (induction) motor at 600 V DC link voltage.

[2] Rated DC link current for dimensioning an external DC connection. For DC link current calculation for dimensioning the Line Module, see section configuration notes.

[3] If, due to a number of Line Modules and Motor Modules being mounted side-by-side, the current carrying capacity exceeds 20 A, an additional 24 V DC connection using a 24 V terminal adapter is required (max. cross-section 6 mm^2, max. fuse protection 20 A).

[4] Power loss of Motor Module at rated power including losses of 24 V DC electronics power supply.

© Siemens AG 2017

Characteristic curves

Overload capability

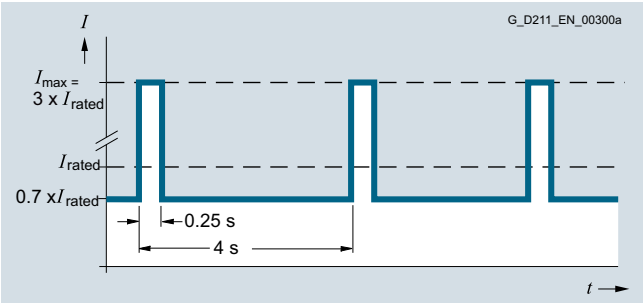

Peak current duty cycle with previous load (300 % overload)

Note:

I_{max} stands for 2 × I_{rated} in the following overload characteristics.

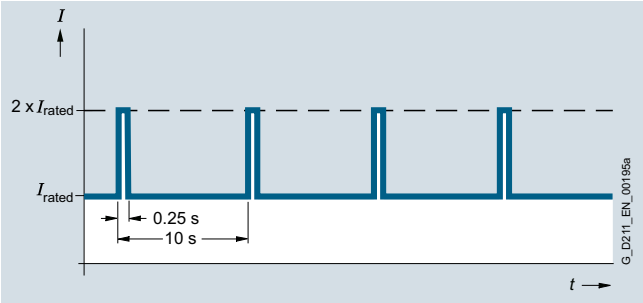

Duty cycle with previous load

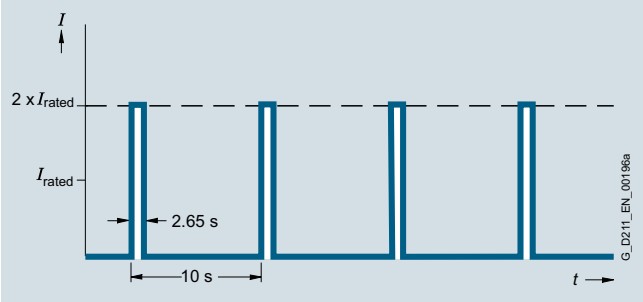

Duty cycle without previous load

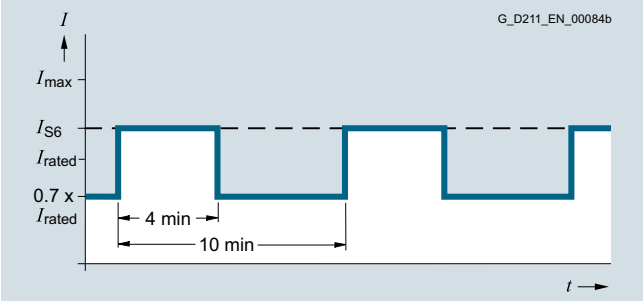

S6 duty cycle with previous load with a duty cycle duration of 600 s

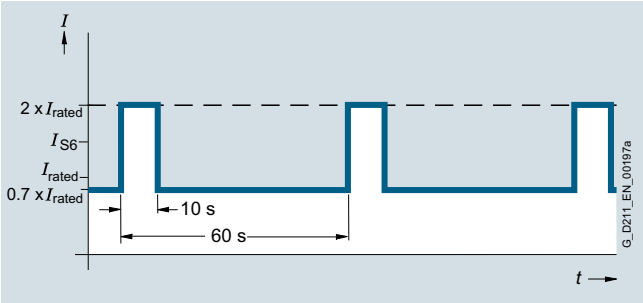

S6 duty cycle with previous load with a duty cycle duration of 60 s

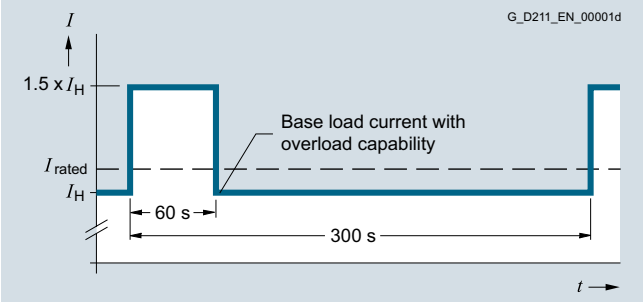

Duty cycle with 60 s overload with a duty cycle duration of 300 s

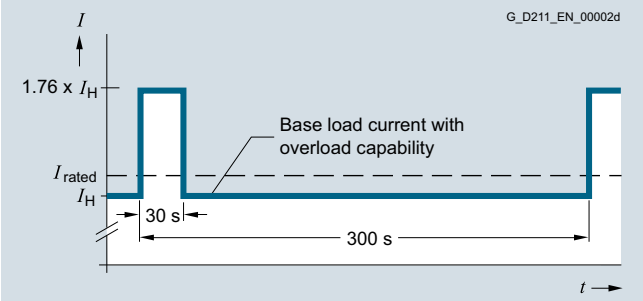

Duty cycle with 30 s overload with a duty cycle duration of 300 s

© Siemens AG 2017

Characteristic curves (continued)

Derating characteristics

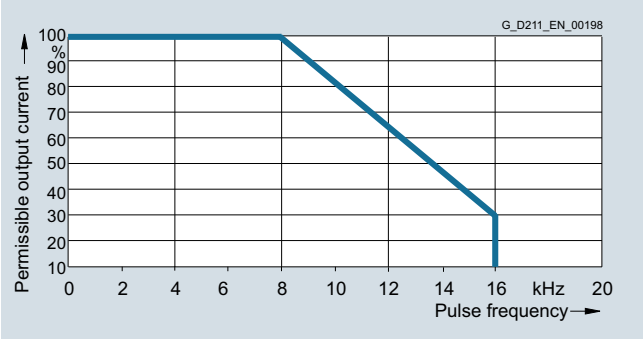

Output current as a function of pulse frequency

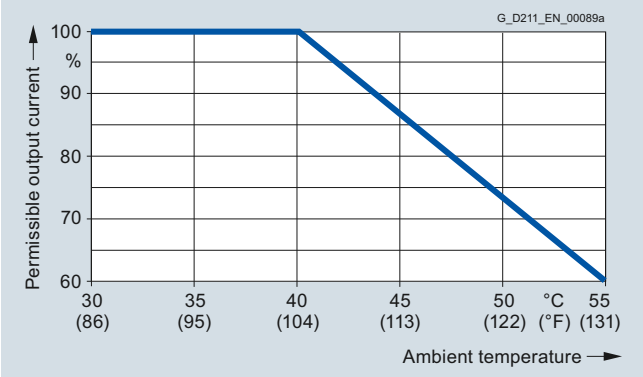

Output current as a function of ambient temperature

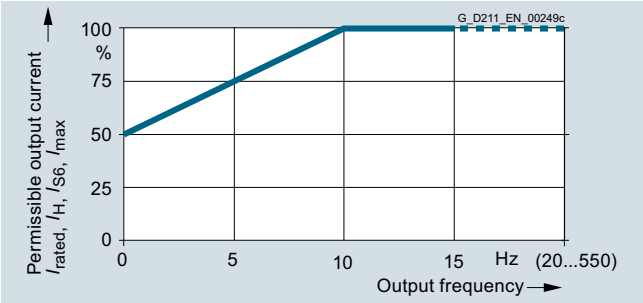

Current derating as a function of output frequency

Installation altitude

- >1000 ... 4000 m (3281 ... 13124 ft) above sea level
  - Reduction of the output current by 10 % per 1000 m (3281 ft), or
  - Reduction of the ambient temperature by 5 °C (41 °F) per 1000 m (3281 ft)
- >2000 ... 4000 m (6562 ... 13124 ft) above sea level
  - Operation on line supply systems with grounded neutral point, or
  - Operation with an isolating transformer with secondary grounded neutral point

© Siemens AG 2017

Design

Double Motor Module in booksize format C/D types

Double Motor Modules feature the following connections and interfaces as standard:

- 2 DC link connections via integrated DC link busbars
- 2 electronics power supply connections via integrated 24 V DC busbars
- 4 DRIVE-CLiQ sockets
- 2 motor connections (connectors X1 and X2 are not included in the scope of delivery)
- 2 safe standstill inputs (1 input per axis)
- 2 safe motor brake controls
- 2 temperature sensor inputs for KTY84-130, Pt1000 or PTC (Pt1000 can be used from firmware V4.7 HF17)
- 1 PE (protective earth) connection

The status of the Motor Modules is indicated via two multi-color LEDs.

The shield is integrated in the housing, which results in an improved shield connection.

Motor Modules in booksize format C/D types, 2 × 3 A to 2 × 18 A

Rated current	3 A	5 A	9 A	18 A	30 A
	D Types				
Single Motor Modules	3 A / 9 A 50 mm (1.97 in)	5 A / 15 A 50 mm (1.97 in)	9 A / 27 A 50 mm (1.97 in)	18 A / 54 A 50 mm (1.97 in)	30 A / 90 A 100 mm (3.94 in)
Double Motor Modules	**2 x 3 A / 2 x 9 A** 50 mm (1.97 in)	**2 x 5 A / 2 x 15 A** 50 mm (1.97 in)	**2 x 9 A / 2 x 27 A** 50 mm (1.97 in)	**2 x 18 A / 2 x 54 A** 100 mm (3.94 in)	–
			C types		
			Single Motor Modules	18 A / 36 A 50 mm (1.97 in)	30 A / 56 A 100 mm (3.94 in)
Rated current / maximum current in A 50 mm (1.97 in) or 100 mm (3.94 in) widths			Double Motor Module	**2 x 18 A / 2 x 36 A** 100 mm (3.94 in)	–

G_PM21_EN_00267

Overview of available Double Motor Modules in booksize format C/D types

- C type: Optimized for continuous load with up to 200 % overload (continuous motion)
- D type: Optimized for highly dynamic, intermittent duty cycles with up to 300 % overload (discontinuous motion)

Devices in booksize format C/D types are optimized for multi-axis applications and are mounted next to one another. The connection for the common DC link is an integral feature. The device is internally air cooled.

The new Motor Modules in booksize format C/D types have been developed to be fully compatible with the booksize series regarding spare parts. The advantages of this new product include:

- The amount of space required beneath the Motor Modules has been reduced thanks to improvements in the design and a new motor plug connector
- With the new motor plug connector design, the brake conductors and the PE connection are integrated directly in the plug connector
- The motor connections on the Double Motor Module are located side by side, resulting in a significantly improved level of accessibility
- The fan can be simply replaced without having to remove the Motor Module

The signal cable shield can be connected to the Motor Module by means of a shield connection terminal, e.g. Weidmüller type KLBÜ 3-8 SC.

The scope of supply of the Motor Modules includes:

- DRIVE-CLiQ cable appropriate to the width of the Motor Module for connection to the adjacent Motor Module, length = width of Motor Module + 0.06 m (0.20 ft)
- 2 blanking plugs for sealing unused DRIVE-CLiQ sockets
- Jumper for connecting the 24 V DC busbar to the adjacent Motor Module
- Connectors X21 and X22
- Device fans supplied from the internal voltage levels for cooling the power unit
- 1 set of warning labels in 30 languages
- 1 shield connection clamp

© Siemens AG 2017

Integration

The Double Motor Module obtains its control information via DRIVE-CLiQ from:

- CU320-2 Control Unit
- SINUMERIK 840D sl with
  - NCU 710.3B PN
  - NCU 720.3B PN
  - NCU 730.3B PN
  - Numeric Control Extensions NX10.3/NX15.3
- SIMOTION D

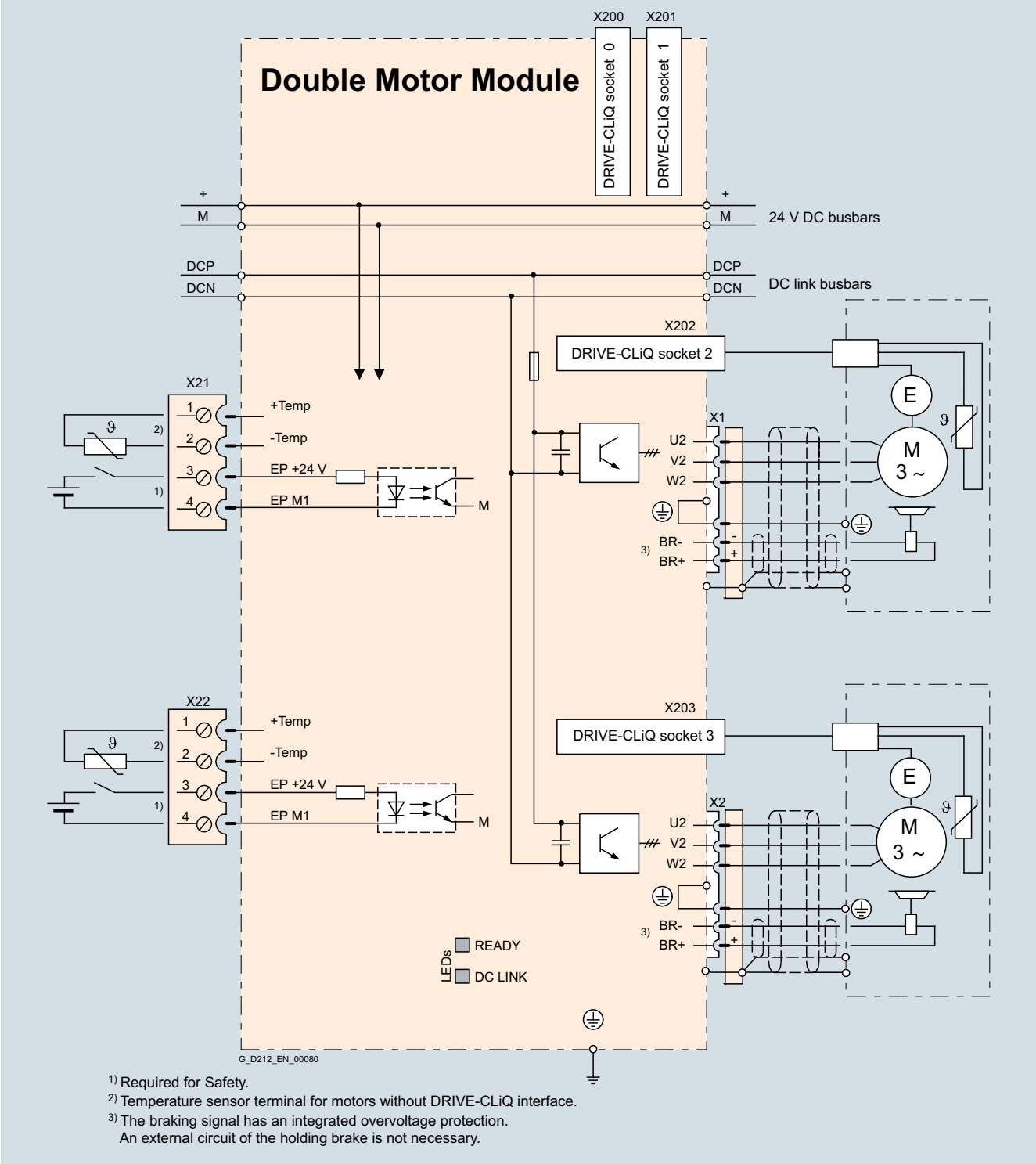

Connection example of Double Motor Modules in booksize format C/D types, 2 × 3 A to 2 × 18 A

© Siemens AG 2017

Selection and ordering data

Rated output current	Type rating [4]	Double Motor Module in booksize format	
		C type	D type
A	kW (hp)	Article No.	Article No.
DC link voltage 510 ... 720 V DC			
2 × 3	2 × 1.6 (2 × 1.5)	–	**6SL3120-2TE13-0AD0**
2 × 5	2 × 2.7 (2 × 3)	–	**6SL3120-2TE15-0AD0**
2 × 9	2 × 4.8 (2 × 5)	–	**6SL3120-2TE21-0AD0**
2 × 18	2 × 9.7 (2 × 10)	**6SL3120-2TE21-8AC0**	**6SL3120-2TE21-8AD0**

Description	Article No.
Accessories	
Power connector (X1/X2) with screw-type terminal At Motor Module end, with screw-type terminals 1.5 ... 6 mm² For Motor Modules in booksize format C/D type with rated output current of 3 ... 30 A	**6SL3162-2MA00-0AC0**
Power connector (X1/X2) with push-in connection At Motor Module end, with spring-loaded terminals 1.5 ... 6 mm² For Motor Modules in booksize format C/D type with rated output current of 3 ... 30 A	**6SL3162-2MB00-0AC0**
DC link rectifier adapter For direct infeed of DC link voltage Screw-type terminals 0.5 ... 10 mm² for Line Modules and Motor Modules in booksize format with a width of 50 mm (1.97 in) or 100 mm (3.94 in)	**6SL3162-2BD00-0AA0**
DC link adapter (2 units) For multi-tier configuration Screw-type terminals 35 ... 95 mm² For all Line Modules and Motor Modules in booksize format	**6SL3162-2BM01-0AA0**
24 V terminal adapter For all Line Modules and Motor Modules in booksize format	**6SL3162-2AA00-0AA0**
Reinforced DC link busbar set For replacement of DC link busbars for 5 modules in booksize format with a width of	
• 50 mm (1.97 in)	**6SL3162-2DB00-0AA0**
• 100 mm (3.94 in)	**6SL3162-2DD00-0AA0**

Description	Article No.
Accessories for re-ordering	
24 V jumper For connection of the 24 V busbars (for booksize format)	**6SL3162-2AA01-0AA0**
Terminal Kit (plug-in terminals, DRIVE-CLiQ jumper (length = module width + 60 mm (2.36 in)), dust protection blanking plugs) For DRIVE-CLiQ port For Motor Modules with a width of	
• 50 mm (1.97 in), C/D type	**6SL3162-8AD00-0AA0**
• 100 mm (3.94 in), C/D type	**6SL3162-8BF00-0AA0**
Warning labels in 30 languages This label set can be glued over the standard German or English labels to provide warnings in other languages. One set of labels is supplied with the devices. One sign in each of the following languages is provided in each set: BG, CN, CZ, DE, DK, EE, ES, FI, FR, GB, GR, HU, IE, IS, IT, JP, KR, LT, LV, MT, NL, NO, PL, PT, RO, RU, SE, SI, SK, TR	**6SL3166-3AB00-0AA0**
Dust protection blanking plugs (50 units) For DRIVE-CLiQ port	**6SL3066-4CA00-0AA0**
Replacement fan For Motor Modules with a width of	
• 50 mm (1.97 in), C/D type	**6SL3162-0AN00-0AA0**
• 100 mm (3.94 in), C/D type	**6SL3162-0AP00-0AA0**

Technical specifications

	Double Motor Module in booksize format 6SL3120-2TE...
DC link voltage (up to 2000 m (6562 ft) above sea level)	510 ... 720 V DC (line voltage 380 ... 480 V 3 AC)
Output frequency	
• Control mode Servo	0 ... 650 Hz [1) 2) 3)]
• Control mode Vector	0 ... 300 Hz [2)]
• Control mode V/f	0 ... 600 Hz [2) 3)]
Electronics power supply	24 V DC -15 %/+20 %
Type of cooling	Internal air cooling (power units with increased air cooling by built-in fan)
Permissible ambient and coolant temperature (air) during operation for line-side components, Line Modules and Motor Modules	0 ... 40 °C (32 ... 104 °F) without derating, > 40 ... 55 °C (104 ... 131 °F), see derating characteristics
Installation altitude	Up to 1000 m (3281 ft) above sea level without derating, > 1000 ... 4000 m (3281 ... 13124 ft) above sea level, see derating characteristics
Declarations of conformity	CE (Low Voltage and EMC Directives)
Certificate of suitability	cULus
Safety Integrated	Safety Integrity Level 2 (SIL 2) according to IEC 61508, Performance Level d (PL d) and Category 3 according to EN ISO 13849-1 For further information, see section Safety Integrated.

1) At rated output current (max. output frequency 1300 Hz for 62.5 µs current control cycle, 8 kHz pulse frequency, 60 % permissible output current).

2) Note the correlation between max. output frequency, pulse frequency and current derating. For further information, see section configuration notes.

3) The output frequency is currently limited to 550 Hz. The specified values apply to systems with license for high output frequency.
For further information, see section Control Units and https://support.industry.siemens.com/cs/document/104020669

4) Nominal hp ratings based on asynchronous (induction) motors. Match the motor nameplate current for specific sizing.

© Siemens AG 2017

Technical specifications (continued)

DC link voltage 510 ... 720 V DC		Double Motor Module in booksize format			
Internal air cooling C type	6SL3120-...	–	–	–	2TE21-8AC0
Internal air cooling D type	6SL3120-...	2TE13-0AD0	2TE15-0AD0	2TE21-0AD0	2TE21-8AD0
Output current					
• Rated current I_{rated}	A	2 × 3	2 × 5	2 × 9	2 × 18
• For S6 duty (40 %) I_{S6}					
- C type	A	–	–	–	2 × 24
- D type	A	2 × 4	2 × 6.7	2 × 12	2 × 24
• Base-load current I_H	A	2 × 2.6	2 × 4.3	2 × 7.7	2 × 15.3
• I_{max}					
- C type	A	–	–	–	2 × 36
- D type	A	2 × 9	2 × 15	2 × 27	2 × 54
Type rating [1]					
• Based on I_{rated}	kW (hp)	2 × 1.6 (1.5)	2 × 2.7 (3)	2 × 4.8 (5)	2 × 9.7 (10)
• Based on I_H	kW (hp)	2 × 1.4 (1)	2 × 2.3 (2.5)	2 × 4.1 (5)	2 × 8.2 (10)
DC link current I_d [2]	A	7.2	12	22	43
Current carrying capacity					
• DC link busbars	A	100	100	100	100
• 24 V DC busbars [3]	A	20	20	20	20
DC link capacitance	µF	220	220	220	705
Current requirement At 24 V DC, max.	A	0.9	0.9	0.9	1.1
Power loss [4] typ. [5] / max.	kW	0.05/0.1	0.08/0.13	0.15/0.19	0.28/0.35
Cooling air requirement	m^3/s (ft^3/s)	0.009 (0.3)	0.009 (0.3)	0.009 (0.3)	0.0155 (0.5)
Sound pressure level L_{pA} (1 m)	dB	<60	<60	<60	<60
Motor connection U2, V2, W2		2 × plug connector (X1, X2) [6], 2 × (1.5 ... 6 mm^2)	2 × plug connector (X1, X2) [6], 2 × (1.5 ... 6 mm^2)	2 × plug connector (X1, X2) [6], 2 × (1.5 ... 6 mm^2)	2 × plug connector (X1, X2) [6], 2 × (1.5 ... 6 mm^2)
PE connection		M5 screw	M5 screw	M5 screw	M5 screw
Motor brake connection		Integrated into the plug-in motor connector (X1, X2), 24 V DC, 2 A	Integrated into the plug-in motor connector (X1, X2), 24 V DC, 2 A	Integrated into the plug-in motor connector (X1, X2), 24 V DC, 2 A	Integrated into the plug-in motor connector (X1, X2), 24 V DC, 2 A
Motor cable length, max.					
• Shielded	m (ft)	50 (164)	50 (164)	50 (164)	70 (230)
• Unshielded	m (ft)	75 (246)	75 (246)	75 (246)	100 (328)
Degree of protection		IP20	IP20	IP20	IP20
Dimensions					
• Width	mm (in)	50 (1.97)	50 (1.97)	50 (1.97)	100 (3.94)
• Height	mm (in)	380 (14.96)	380 (14.96)	380 (14.96)	380 (14.96)
• Depth	mm (in)	270 (10.6)	270 (10.6)	270 (10.6)	270 (10.6)
Weight, approx.	kg (lb)	4.7 (10.4)	4.7 (10.4)	4.7 (10.4)	7.7 (17.0)

1) Rated power of a typical standard asynchronous (induction) motor at 600 V DC link voltage.

2) Rated DC link current for dimensioning an external DC connection. For DC link current calculation for dimensioning the Line Module, see section configuration notes.

3) If, due to a number of Line Modules and Motor Modules being mounted side-by-side, the current carrying capacity exceeds 20 A, an additional 24 V DC connection using a 24 V terminal adapter is required (max. cross-section 6 mm^2, max. fuse protection 20 A).

4) Power loss of Motor Module at rated power including losses of 24 V DC electronics power supply.

5) At max. motor cable length 30 m (98.43 ft), pulse frequency 4 kHz and DC link voltage 540 ... 600 V.

6) Connector not included in scope of supply, see Accessories.

© Siemens AG 2017

Characteristic curves

Overload capability

Motor Modules in booksize format C type

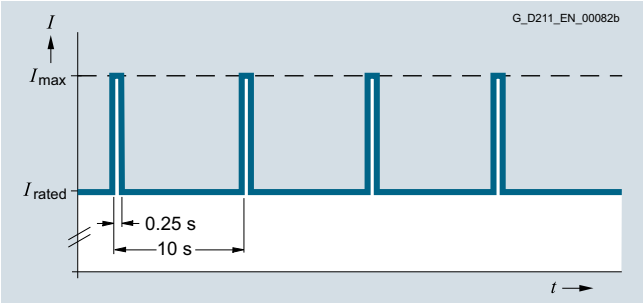

Duty cycle with previous load

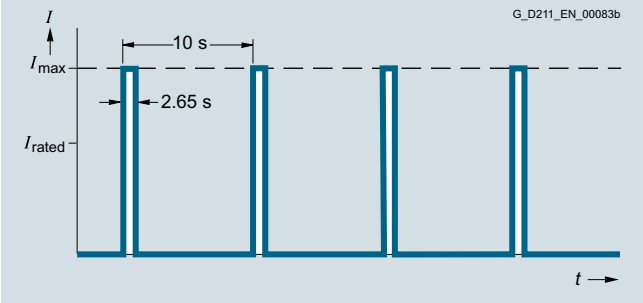

Duty cycle without previous load

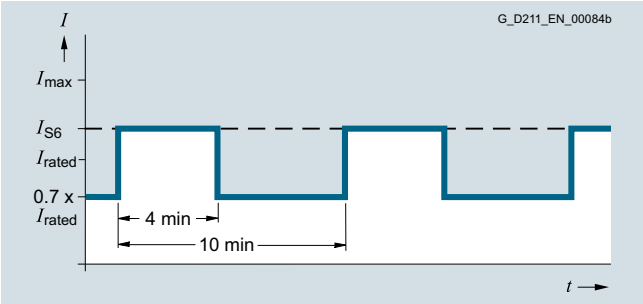

S6 duty cycle with previous load with a duty cycle duration of 600 s

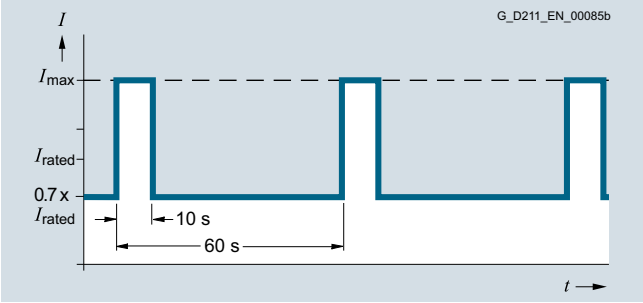

S6 duty cycle with previous load with a duty cycle duration of 60 s

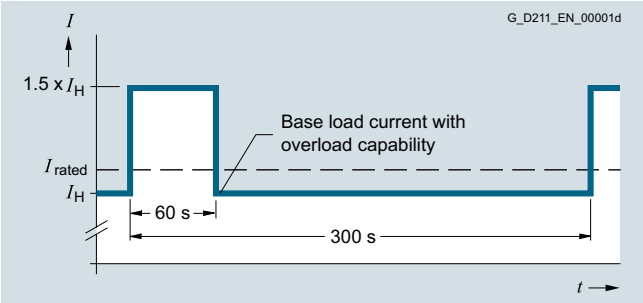

Duty cycle with 60 s overload with a duty cycle duration of 300 s

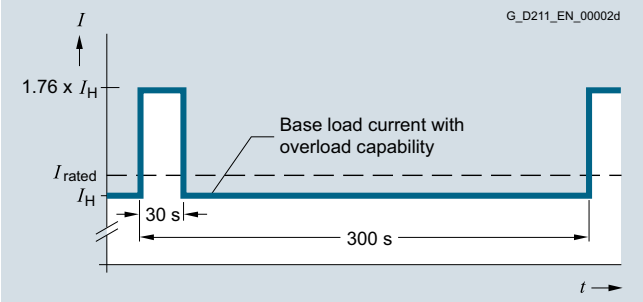

Duty cycle with 30 s overload with a duty cycle duration of 300 s

© Siemens AG 2017

Characteristic curves (continued)

Motor Modules in booksize format D type

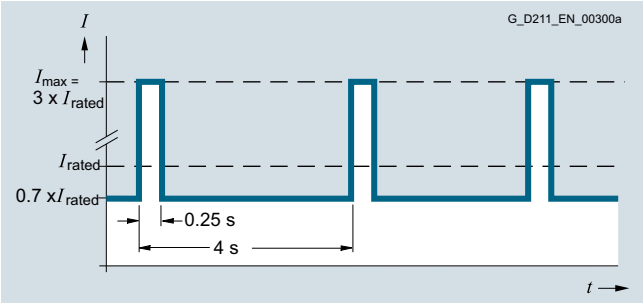

Peak current duty cycle with previous load (300 % overload)

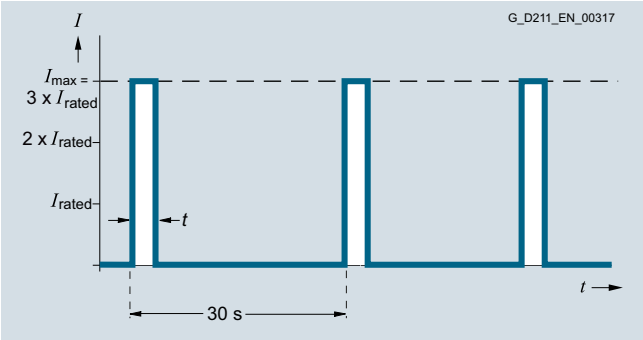

Peak current duty cycle without previous load (300 % overload)

Double Motor Module	Time t at I_{max}
2 × 3 A	0.5 s
2 × 5 A	0.5 s
2 × 9 A	0.5 s
2 × 18 A	1.25 s

This duty cycle is only permissible for pulse frequencies up to 8 kHz. The current must be derated for pulse frequencies of > 4 kHz.

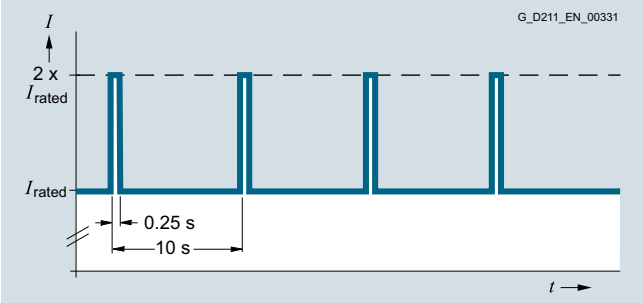

Duty cycle with previous load

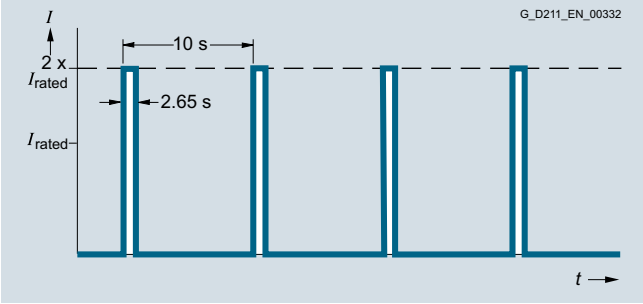

Duty cycle without previous load

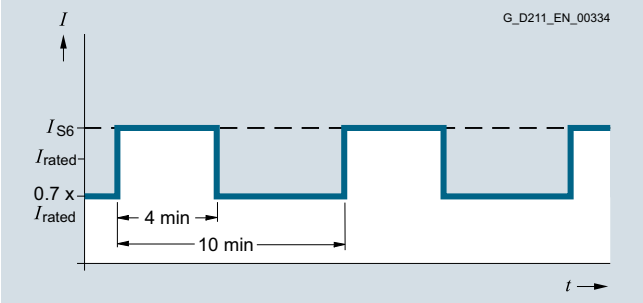

S6 duty cycle with previous load with a duty cycle duration of 600 s

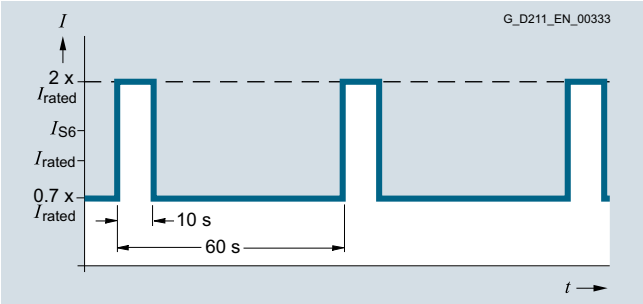

S6 duty cycle with previous load with a duty cycle duration of 60 s

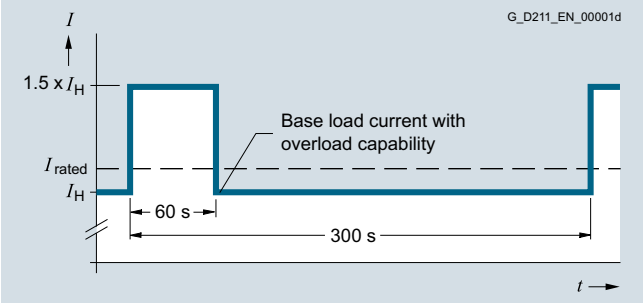

Duty cycle with 60 s overload with a duty cycle duration of 300 s

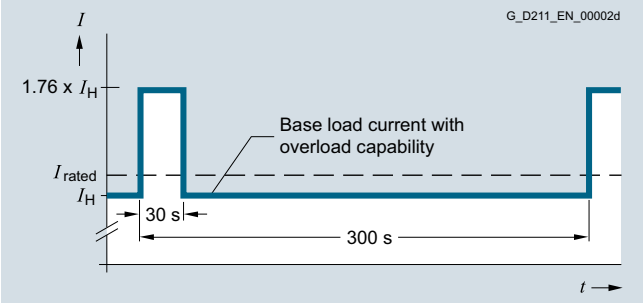

Duty cycle with 30 s overload with a duty cycle duration of 300 s

© Siemens AG 2017

Characteristic curves (continued)

Derating characteristics

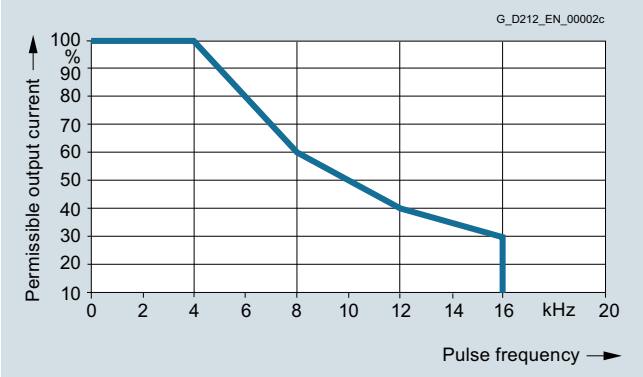

Output current as a function of pulse frequency

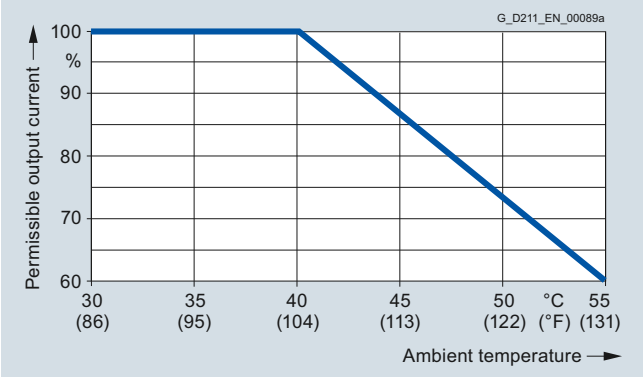

Output current as a function of ambient temperature

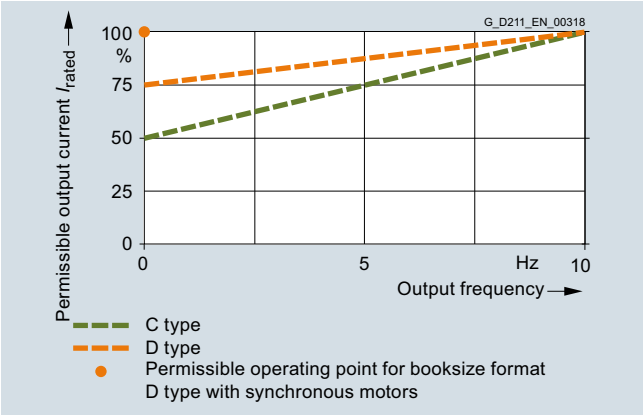

Output current at low output frequencies

Installation altitude

- >1000 ... 4000 m (3281 ... 13124 ft) above sea level
  - Reduction of the output current by 10 % per 1000 m (3281 ft), or
  - Reduction of the ambient temperature by 5 °C (41 °F) per 1000 m (3281 ft)
- >2000 ... 4000 m (6562 ... 13124 ft) above sea level
  - Operation on line supply systems with grounded neutral point, or
  - Operation with an isolating transformer with secondary grounded neutral point

© Siemens AG 2017

Overview

Braking Module booksize compact format

A Braking Module and the matching external braking resistor are required to bring drives to a controlled standstill in the event of a power failure (e.g. emergency retraction or EMERGENCY OFF category 1) or limit the DC link voltage for brief periods of generator operation, e.g. when the regenerative feedback capability of the Line Module is deactivated. The Braking Module includes the power electronics and the associated control circuit. During operation, the DC link power is converted into heat loss in an external braking resistor. Braking Modules function autonomously. Several Braking Modules in booksize compact format can be operated in parallel. In this case, each Braking Module must have its own braking resistor. Braking Modules in booksize compact format can also be used for rapid discharge of the DC link.

Design

The Braking Modules in booksize compact format can be integrated in drive line-ups in booksize and booksize compact formats.

The Braking Module in booksize compact format features the following connections and interfaces as standard:

- 2 DC link connections via integrated DC link busbars
- 2 electronics power supply connections via integrated 24 V DC busbars
- Connector X1 for connecting the braking resistor
- Connection for thermostatic switch for monitoring the braking resistor
- 4 DIP switches for setting the operating threshold, selecting the braking resistor and the cooling method for the Braking Module
- 2 digital inputs (disable Braking Module/acknowledge faults and rapid discharge of DC link)
- 3 digital outputs (Braking Module disabled, prewarning from $I \times t$ monitor and set activation threshold)
- 2 PE (protective earth) connections

The status of the Braking Module is indicated via two 2-color LEDs.

[1] The activation threshold of the Braking Module in booksize compact format can be set on a DIP switch. The higher values for peak or rated braking power apply in operation at the upper activation threshold 775 V DC (factory setting). The outputs specified in parentheses are possible at the lower activation threshold 410 V DC.

[2] Several Braking Modules in the booksize format can be operated in parallel, typically up to 4 modules.

Selection and ordering data

Description	Article No.
DC link voltage 510 ... 720 V DC	
Braking Module in booksize compact format	**6SL3400-1AE31-0AA1**
Accessories	
Spacing bolt (4 units) The mounting depth of modules in booksize compact format is increased when it is mounted on these spacing bolts by such an amount that it can be integrated into a drive line-up in booksize format. 2 spacing bolts are needed to mount 50 mm (1.97 in) wide modules.	**6SL3462-1CC00-0AA0**
Warning labels in 30 languages This label set can be glued over the standard German or English labels to provide warnings in other languages. One set of labels is supplied with the devices. One sign in each of the following languages is provided in each set: BG, CN, CZ, DE, DK, EE, ES, FI, FR, GB, GR, HU, IE, IS, IT, JP, KR, LT, LV, MT, NL, NO, PL, PT, RO, RU, SE, SI, SK, TR	**6SL3166-3AB00-0AA0**

Technical specifications

DC link voltage 510 ... 720 V DC	**Braking Module in booksize compact format Internal air cooling** 6SL3400-1AE31-0AA1
Rated power P_{DB}	5 kW (2.5 kW) [1] [2]
Peak power P_{max}	100 kW (50 kW) [1] [2]
Activation threshold	775 V (410 V) [1]
Cable length to braking resistor, max.	10 m (32.8 ft)
DC link capacitance	6 µF
Current requirement with 24 V DC, max.	0.5 A
Digital inputs In accordance with IEC 61131-2 Type 1	
• Voltage	-3 V ... +30 V
• Low level (an open digital input is interpreted as "low")	-3 V ... +5 V
• High level	15 ... 30 V
• Current consumption at 24 V DC, typ.	10 mA
• Conductor cross-section, max.	1.5 mm²
Digital outputs (sustained-short-circuit-proof)	
• Voltage	24 V DC
• Load current per digital output, max.	100 mA
• Conductor cross-section, max.	1.5 mm²
Current carrying capacity	
• 24 V DC busbars	20 A
• DC link busbars	100 A
PE connection	M5 screw
Dimensions	
• Width	50 mm (1.97 in)
• Height	270 mm (10.63 in)
• Depth	226 mm (8.90 in)
Weight, approx.	2.7 kg (5.95 lb)
Certificate of suitability	cURus

© Siemens AG 2017

Integration

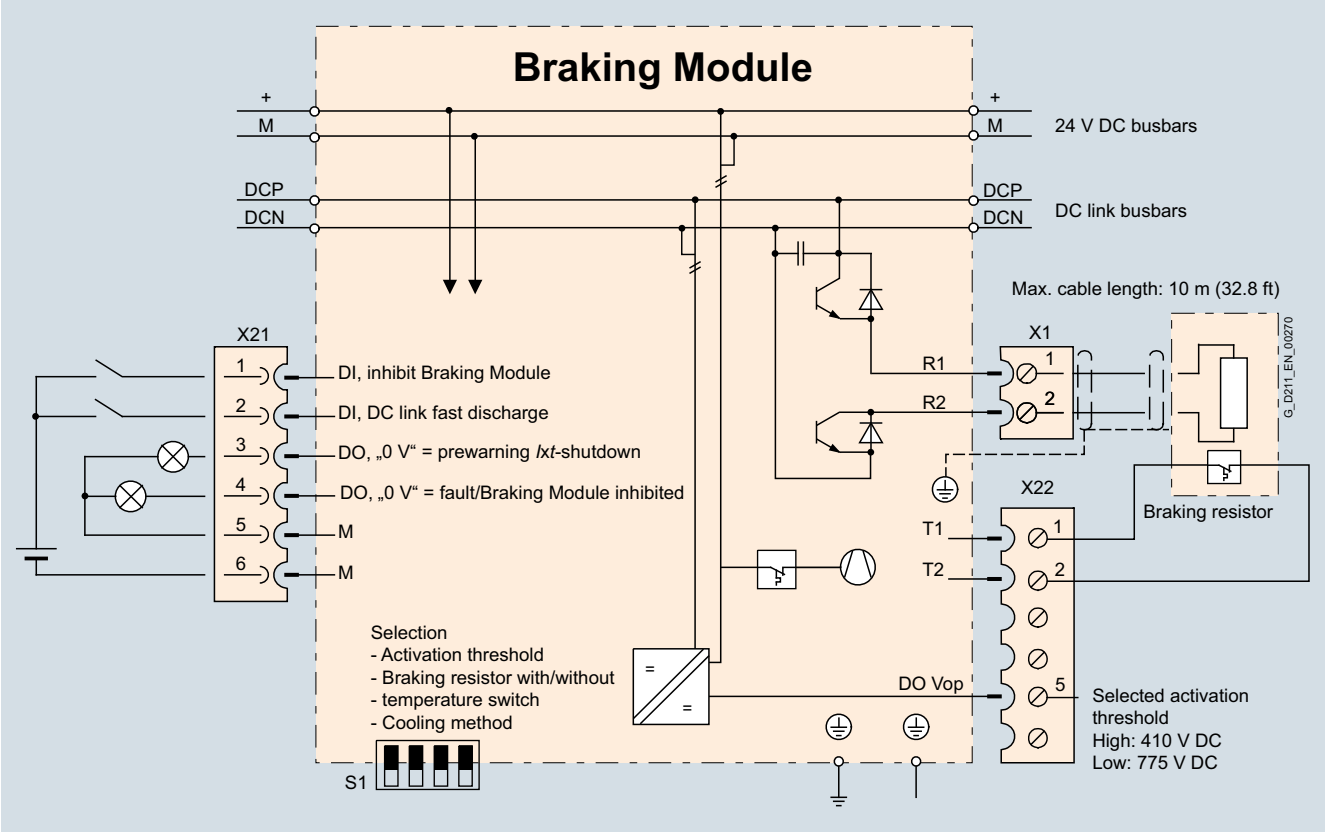

Connection example of Braking Module in booksize compact format

© Siemens AG 2017

Overview

Braking Module in booksize format

A Braking Module and the matching external braking resistor are required to bring drives to a controlled standstill in the event of a power failure (e.g. emergency retraction or EMERGENCY STOP category 1) or limit the DC link voltage for brief periods of generator operation, e.g. when the regenerative feedback capability of the Line Module is deactivated. The Braking Module includes the power electronics and the associated control circuit. During operation, the DC link energy is converted into heat loss in an external braking resistor. Braking Modules function autonomously.

Braking Modules in booksize format can also be used for rapid discharge of the DC link.

Design

The Braking Module in booksize format features the following connections and interfaces as standard:

- 2 DC link connections via integrated DC link busbars
- 2 electronics power supply connections via integrated 24 V DC bars
- Terminals for connecting the braking resistor
- 2 digital inputs (disable Braking Module/acknowledge faults and rapid discharge of DC link)
- 2 digital outputs (Braking Module disabled and pre-warning – $I \times t$ monitoring)
- 2 PE (protective earth) connections

The status of the Braking Module is indicated via two 2-color LEDs.

Selection and ordering data

Description	Article No.
DC link voltage 510 ... 720 V DC	
Braking Module in booksize format	**6SL3100-1AE31-0AB1**
Accessories	
Warning labels in 30 languages This label set can be glued over the standard German or English labels to provide warnings in other languages. One set of labels is supplied with the devices. One sign in each of the following languages is provided in each set: BG, CN, CZ, DE, DK, EE, ES, FI, FR, GB, GR, HU, IE, IS, IT, JP, KR, LT, LV, MT, NL, NO, PL, PT, RO, RU, SE, SI, SK, TR	**6SL3166-3AB00-0AA0**

Technical specifications

DC link voltage 510 ... 720 V DC	**Braking Module in booksize format Internal air cooling** 6SL3100-1AE31-0AB1
Rated power P_{DB}	1.5 kW [1]
Peak power P_{max}	100 kW [1]
Activation threshold	770 V
Cable length to braking resistor, max.	10 m (32.81 ft)
DC link capacitance	110 µF
Current requirement with 24 V DC, max.	0.5 A
Digital inputs In accordance with IEC 61131-2 Type 1	
• Voltage	-3 V ... +30 V
• Low level (an open digital input is interpreted as "low")	-3 V ... +5 V
• High level	15 ... 30 V
• Current consumption at 24 V DC, typ.	10 mA
• Conductor cross-section, max.	1.5 mm²
Digital outputs (continuously short-circuit proof)	
• Voltage	24 V DC
• Load current per digital output, max.	100 mA
• Conductor cross-section, max.	1.5 mm²
Current carrying capacity	
• 24 V DC busbars	20 A
• DC link busbars	100 A
PE connection	M5 screw
Dimensions	
• Width	50 mm (1.97 in)
• Height	380 mm (14.96 in)
• Depth, with spacer (included in scope of supply)	270 mm (10.63 in)
Weight, approx.	4.1 kg (9 lb)
Certificate of suitability	cURus

[1] Connecting Braking Modules in the booksize format in parallel should be avoided, as it cannot be guaranteed that the power will be evenly divided between the modules.

© Siemens AG 2017

Integration

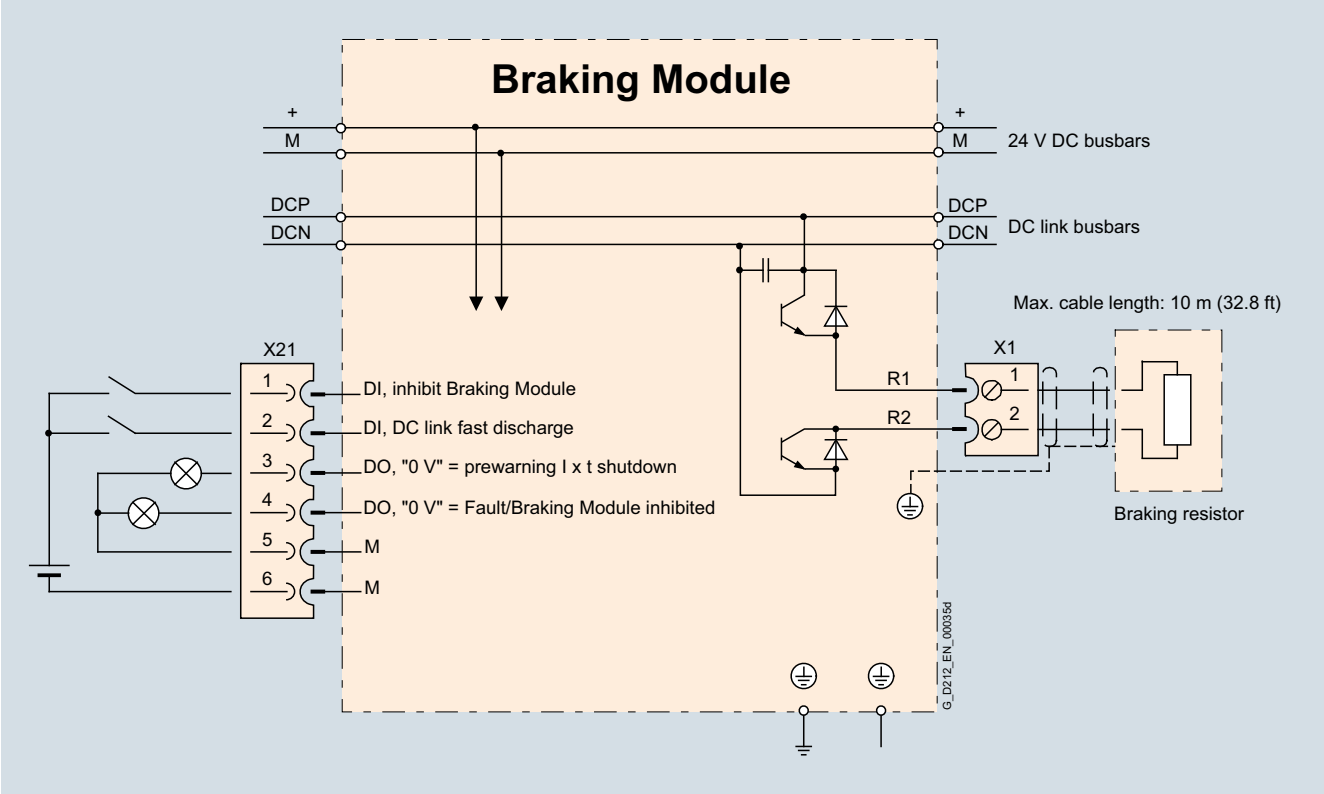

Connection example of Braking Module in booksize format

© Siemens AG 2017

Overview

The excess energy of the DC link is dissipated via the braking resistor.

The corresponding braking resistor is connected to a Braking Module or Basic Line Module. Mounting the braking resistor outside the control cabinet or switchgear room allows the power losses to be dissipated, thereby allowing a corresponding reduction in the level of air conditioning required.

Selection and ordering data

Power P_{DB}/P_{max}	Suitable for	**Braking resistor** Article No.
DC link voltage 510 ... 720 V DC		
0.3 kW/25 kW	Braking Module 6SL3100-1AE31-0AB0	**6SN1113-1AA00-0DA0**
1.5 kW/100 kW	Braking Module 6SL3100-1AE31-0AB0	**6SL3100-1BE31-0AA0**
5 kW/30 kW	Basic Line Module 20 kW 6SL3130-1TE22-0AA0	**6SE7023-2ES87-2DC0**
12.5 kW/75 kW	Basic Line Module 40 kW 6SL3130-1TE24-0AA0	**6SE7028-0ES87-2DC0**

© Siemens AG 2017

Technical specifications

DC link voltage 510 V ... 720 V DC		Braking resistor for Braking Module in booksize and booksize compact format			
		6SN1113-1AA00-0DA0		6SL3100-1BE31-0AA0	
Resistance	Ω	17		5.7	
Rated power P_{DB}	kW	0.3		1.5	
Peak power P_{max}	kW	25		100	
Load duration for peak output t_a	s	0.1	0.4	1	2
Cycle duration of braking duty cycle t	s	11.5	210	68	460
Degree of protection		IP54 Braking resistor with connected 1.5 mm² cable (shielded), 3 m (9.84 ft) long		IP20	
Dimensions					
• Width	mm (in)	80 (3.15)		193 (7.60)	
• Height	mm (in)	210 (8.27)		410 (16.1)	
• Depth	mm (in)	53 (2.09)		240 (9.45)	
Weight, approx.	kg (lb)	3.4 (7.50)		5.6 (12.3)	
Certificate of suitability		cULus		–	

DC link voltage 510 V ... 720 V DC		Braking resistor	
		6SE7023-2ES87-2DC0	6SE7028-0ES87-2DC0
Resistance	Ω	20	8
Rated power P_{DB}	kW	5	12.5
Peak power P_{max}	kW	30	75
Load duration for peak output t_a	s	15	15
Cycle duration of braking duty cycle t	s	90	90
Degree of protection		IP20	IP20
Power connections		M6 screw stud	M6 screw stud
PE connection		M6 screw stud	M6 screw stud
Thermostatic switch (NC contact)		Screw-type terminals	Screw-type terminals
• Switching capacity		250 V AC/max. 10 A 42 V DC/0.2 A	250 V AC/max. 10 A 42 V DC/0.2 A
• Conductor cross-section	mm²	2.5	1.5
Dimensions			
• Width	mm (in)	450 (17.7)	745 (29.3)
• Height	mm (in)	305 (12.0)	305 (12.0)
• Depth	mm (in)	485 (19.1)	485 (19.1)
Weight, approx.	kg (lb)	17 (37.5)	27 (59.5)
Certificate of suitability		UL, CSA	UL, CSA
Suitable for			
Basic Line Module in booksize format	Type	6SL3130-1TE22-0AA0	6SL3130-1TE24-0AA0
Braking Module in booksize compact format	Type	6SL3400-1AE31-0AA0	–

Characteristic curves

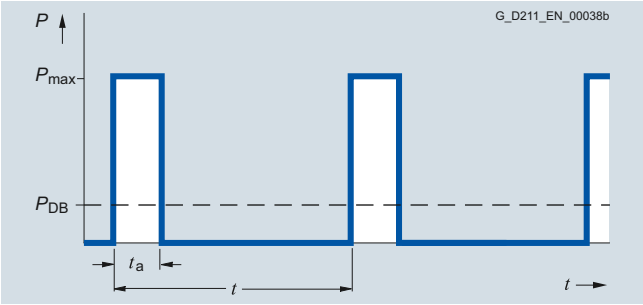

Load diagram for Braking Module in booksize format and braking resistors for booksize format

© Siemens AG 2017

Overview

Capacitor Module in booksize format

Capacitor Modules are used to increase the DC link capacitance to bridge momentary power losses.

Capacitor Modules are connected to the DC link voltage via the integrated DC link busbars. Capacitor Modules function autonomously.

Several Capacitor Modules can be operated in parallel.

Design

Capacitor Modules feature the following connections and interfaces as standard:

- 2 DC link connections via integrated DC link busbars
- 2 PE (protective earth) connections

Selection and ordering data

Description	Article No.
Capacitor Module	**6SL3100-1CE14-0AA0**
Accessories	
Warning labels in 30 languages This label set can be glued over the standard German or English labels to provide warnings in other languages. One set of labels is supplied with the devices. One sign in each of the following languages is provided in each set: BG, CN, CZ, DE, DK, EE, ES, FI, FR, GB, GR, HU, IE, IS, IT, JP, KR, LT, LV, MT, NL, NO, PL, PT, RO, RU, SE, SI, SK, TR	**6SL3166-3AB00-0AA0**

Technical specifications

DC link voltage 510 ... 720 V DC	**Capacitor Module** **Internal air cooling** 6SL3100-1CE14-0AA0
Capacitance	4000 µF
Current carrying capacity	
• 24 V DC busbars	20 A
• DC link busbars	100 A
PE connection	M5 screw
Dimensions	
• Width	100 mm (3.94 in)
• Height	380 mm (14.96 in)
• Depth, with spacer (included in scope of supply)	270 mm (10.63 in)
Weight, approx.	7.2 kg (16 lb)
Certificate of suitability	cULus

© Siemens AG 2017

Control Supply Module in booksize format

Overview

Control Supply Module in booksize format

The Control Supply Module in booksize format provides a 24 V to 28.8 V DC power supply that can be set using an integrated poteniomenter via the line or DC link. The Control Supply Module can either be operated individually or in a parallel connection with a maximum of 10 devices. A DIP switch on the top of the module is used to change over in the de-energized state (details of connection for parallel operation are given in the manual for booksize modules).

Using the Control Supply Module, it is possible for example to make specific emergency retraction movements in the event of a power failure, provided that the DC link voltage is available.

Design

Control Supply Modules feature the following connections and interfaces as standard:

- 1 line connection
- 2 DC link connections via integrated DC link busbars
- 2 electronics power supply connections via integrated 24 V DC bars
- 1 connection for the electronics power supply for Control Units, Terminal Modules, Sensor Modules, etc., via the 24 V terminal adapter provided in the scope of supply (max. cross-section 6 mm^2, max. fuse protection 20 A)
- 1 integrated potentiometer for setting the output voltage
- 1 digital output to signal the error-free state
- 1 DIP switch to change over between single and parallel mode
- 2 PE (protective earth) connections

The status of the Control Supply Modules is indicated via two multi-color LEDs.

Selection and ordering data

Description	Article No.
Control Supply Module in booksize format	**6SL3100-1DE22-0AA1**
Accessories	
Warning labels in 30 languages This label set can be glued over the standard German or English labels to provide warnings in other languages. One set of labels is supplied with the devices. One sign in each of the following languages is provided in each set: BG, CN, CZ, DE, DK, EE, ES, FI, FR, GB, GR, HU, IE, IS, IT, JP, KR, LT, LV, MT, NL, NO, PL, PT, RO, RU, SE, SI, SK, TR	**6SL3166-3AB00-0AA0**

Technical specifications

DC link voltage 510 ... 720 V DC **Line voltage 380 ... 480 V 3 AC**	**Control Supply Module in booksize format Internal air cooling** 6SL3100-1DE22-0AA1
Rated input current	
• At 400 V 3 AC	≤2 A
• At 600 V DC	1.1 A
DC link voltage range	300 … 882 V DC (operation in 300 … 430 V DC range is permitted temporarily for < 1 min)
Radio interference suppression (standard)	Category C2 to EN 61800-3
Rated output voltage	24 V ... 28.8 V DC (adjustable via potentiometer)
Rated output current	20 A
Current carrying capacity	
• 24 V DC busbars	20 A
• DC link busbars	100 A
Line connection L1, L2, L3 (X1)	Screw-type terminals
• Conductor cross-section	0.2 ... 4 mm^2
PE connection	M5 screw
Dimensions	
• Width	50 mm (1.97 in)
• Height	380 mm (14.96 in)
• Depth, with spacer (included in scope of supply)	270 mm (10.63 in)
Weight, approx.	4.8 kg (10.6 lb)
Certificate of suitability	cULus

© Siemens AG 2017

Integration

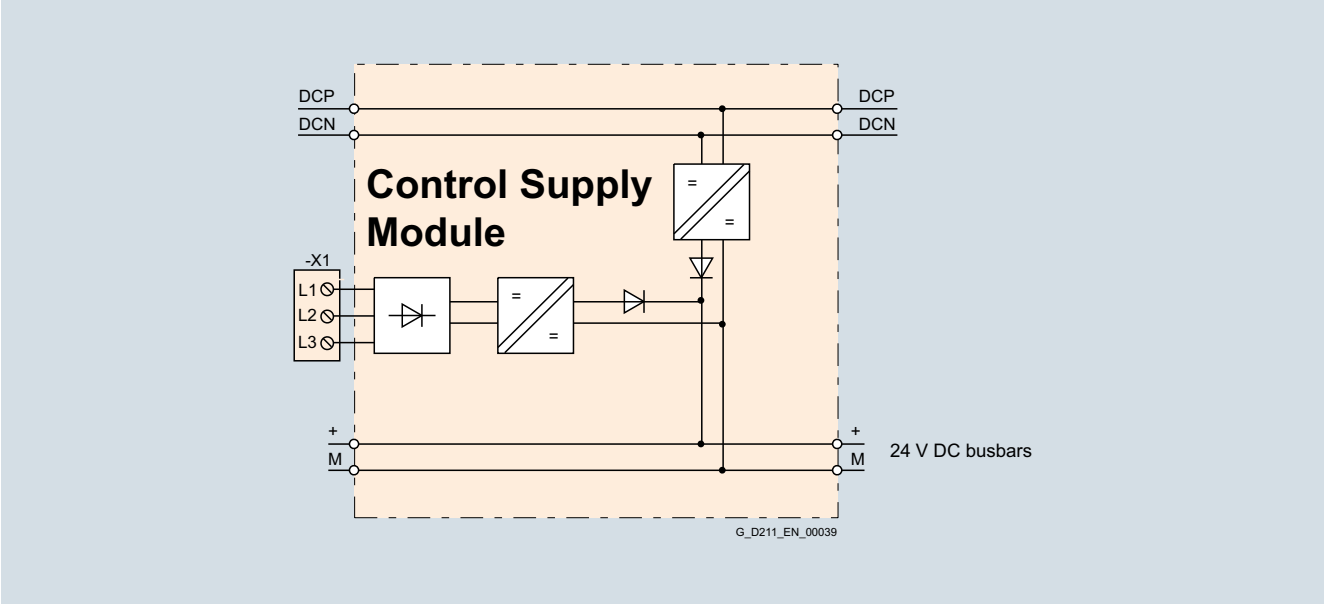

Connection example of Control Supply Module

© Siemens AG 2017

DC link adapters for booksize and booksize compact formats

Overview

DC link rectifier adapter

DC link rectifier adapter for unit widths of 50 mm (1.97 in) and 100 mm (3.94 in)

DC link rectifier adapter for unit widths of 150 mm ... 300 mm (5.91 in ... 11.81 in)

If the internal DC link busbars of the Motor Modules are not used, the DC link voltage must be supplied externally through a DC link rectifier adapter, e.g. when devices of booksize format are coupled with devices of chassis format via an external DC busbar. The DC link rectifier adapter is mounted on the DC link busbars of the Motor Module. The DC link cables are routed from above.

DC link adapter

DC link adapter (multi-tier) for all unit widths

If a multi-tier Motor Module configuration is used, a DC link adapter can be provided for linking the DC links of two drive line-ups. The DC link adapter is mounted sideways on the DC link busbars of the Motor Module. Installation is possible on the right or left side of the Motor Module. The marking of the poles (DCN and DCP) at the DC link adapter matches the side chosen for installation. The DC link cables are routed from behind. The DC link adapter (multi-tier) cannot be used in combination with the reinforced DC link busbars for Motor Modules ≤ 100 mm (3.94 in) wide. DC link adapters are supplied in sets of 2 units.

Selection and ordering data

Description	Article No.
DC link rectifier adapter	
For direct infeed of DC link voltage	
For Line Modules and Motor Modules in the booksize and booksize compact format with a width of	
• 50 mm (1.97 in) and 100 mm (3.94 in)	**6SL3162-2BD00-0AA0**
• 150 mm (5.91 in), 200 mm (7.87 in) and 300 mm (11.81 in)	**6SL3162-2BM00-0AA0**
DC link adapter set (2 units)	
For multi-tier configuration	
• For all Line Modules and Motor Modules in booksize and booksize compact format	**6SL3162-2BM01-0AA0**
• For all Line Modules and Motor Modules in booksize format 50 mm (1.97 in) and 100 mm (3.94 in) wide with reinforced DC links	**6SL3162-2BM10-0AA0**

Technical specifications

		DC link rectifier adapter		DC link adapter set	
		6SL3162-2BD00-0AA0	6SL3162-2BM00-0AA0	6SL3162-2BM01-0AA0	6SL3162-2BM10-0AA0
Connection		Screw-type terminals	Screw-type terminals	Screw-type terminals	Screw-type terminals
• Conductor cross-section	mm^2	0.5 ... 10	35 ... 95	35 ... 95	35 ... 95
Current carrying capacity	A	43	240	240	240
Weight, approx.	kg (lb)	0.06 (0.13)	0.48 (1.06)	0.76 (1.68)	0.76 (1.68)
Certificate of suitability		cURus	cURus	cURus	cURus
Suitable for Line Modules and Motor Modules	Formats	Booksize and booksize compact	Booksize and booksize compact	Booksize and booksize compact	Booksize and booksize compact with reinforced DC link busbars

© Siemens AG 2017

Overview

Motor reactors reduce the voltage loading on the motor windings. At the same time, the capacitive charge/discharge currents that place an additional load on the power unit when long motor cables are used are reduced. The maximum permissible output frequency when a motor reactor is used is 120 Hz.

The motor reactors are designed for a pulse frequency of 4 kHz. Higher pulse frequencies are not permissible.

The motor reactor must be installed as close as possible to the Motor Module.

Selection and ordering data

Rated output current of Motor Module	Suitable for Motor Module in booksize format	**Motor reactor** Article No.
3 A and 2 × 3 A	6SL3120-1TE13-0AD0 6SL3120-2TE13-0AD0	**6SE7021-0ES87-1FE0**
5 A and 2 × 5 A	6SL3120-1TE15-0AD0 6SL3120-2TE15-0AD0	**6SE7021-0ES87-1FE0**
9 A and 2 × 9 A	6SL3120-1TE21-0AD0 6SL3120-2TE21-0AD0	**6SL3000-2BE21-0AA0**
18 A and 2 × 18 A	6SL3120-1TE21-8AC0 6SL3120-1TE21-8AD0 6SL3120-2TE21-8AC0 6SL3120-2TE21-8AD0	**6SE7022-6ES87-1FE0**
30 A	6SL3120-1TE23-0AC0 6SL3120-1TE23-0AD0	**6SE7024-7ES87-1FE0**
45 A	6SL3120-1TE24-5AA3	**6SE7027-2ES87-1FE0**
60 A	6SL3120-1TE26-0AA3	**6SL3000-2BE26-0AA0**
85 A	6SL3120-1TE28-5AA3	**6SE7031-5ES87-1FE0**
132 A	6SL3120-1TE31-3AA3	**6SE7031-8ES87-1FE0**
200 A	6SL3120-1TE32-0AA4	**6SE7032-6ES87-1FE0**

© Siemens AG 2017

Technical specifications

DC link voltage 510 ... 720 V DC or Line voltage 380 ... 480 V 3 AC		Motor reactor (for a 4 kHz pulse frequency)					
		6SE7021-0ES87-1FE0		6SL3000-2BE21-0AA0	6SE7022-6ES87-1FE0		6SE7024-7ES87-1FE0	
Rated current	A	5		9	18		30	
Maximum current	A	10		18	36		60	
Rated inductance	µH	1243		1000	332		180	
Power loss	kW	0.08		0.09	0.11		0.19	
Connection Motor Module/Motor		Screw-type terminals 4 mm²		Screw-type terminals 16 mm²	Screw-type terminals 16 mm²		Flat connector for M8 screw	
PE connection		M6 screw stud		M6 screw stud	M6 screw stud		M6 screw stud	
Cable length between motor reactor and motor, max. (number of reactors in series)		(1)		(1)	(1)	(2)	(1)	(2)
• Shielded	m (ft)	100 (328)		135 (443)	160 (525)	320 (1050)	190 (623)	375 (1230)
• Unshielded	m (ft)	150 (492)		200 (656)	240 (787)	480 (1575)	280 (919)	560 (1837)
Degree of protection		IP00		IP00	IP00		IP00	
Dimensions								
• Width	mm (in)	178 (7.01)		178 (7.01)	219 (8.62)		197 (7.76)	
• Height	mm (in)	153 (6.02)		159 (6.26)	180 (7.09)		220 (8.66)	
• Depth	mm (in)	88 (3.46)		111 (4.37)	119 (4.69)		104 (4.09)	
Weight, approx.	kg (lb)	5.5 (12.13)		4.8 (10.6)	7.8 (17.2)		13 (28.7)	
Certificate of suitability		cURus		cURus	cURus		cURus	
Suitable for Motor Module in booksize format	Type	6SL3120-1TE13-0AD0 6SL3120-2TE13-0AD0	6SL3120-1TE15-0AD0 6SL3120-2TE15-0AD0	6SL3120-1TE21-0AD0 6SL3120-2TE21-0AD0	6SL3120-1TE21-8AC0 6SL3120-1TE21-8AD0 6SL3120-2TE21-8AC0 6SL3120-2TE21-8AD0		6SL3120-1TE23-0AC0 6SL3120-1TE23-0AD0	
• Rated current of the Motor Module	A	3	5	9	18		30	

DC link voltage 510 ... 720 V DC or Line voltage 380 ... 480 V 3 AC		Motor reactor (for a 4 kHz pulse frequency)														
		6SE7027-2ES87-1FE0			6SL3000-2BE26-0AA0			6SE7031-5ES87-1FE0			6SE7031-8ES87-1FE0			6SE7032-6ES87-1FE0		
Rated current	A	45			60			85			132			200		
Rated inductance	µH	59			62			29			23			16		
Power loss	kW	0.2			0.1			0.22			0.29			0.29		
Connection Motor Module/Motor		Flat connector for M8 screw			Flat connector for M8 screw			Flat connector for M8 screw			Flat connector for M10 screw			Flat connector for M10 screw		
PE connection		M6 screw stud			M6 screw stud			M6 screw			M6 screw			M6 screw		
Cable length between motor reactor and motor, max. (number of reactors in series)		(1)	(2)	(3)	(1)	(2)	(3)	(1)	(2)	(3)	(1)	(2)	(3)	(1)	(2)	(3)
• Shielded	m (ft)	200 (656)	400 (1312)	600 (1969)	200 (656)	400 (1312)	600 (1969)	200 (656)	400 (1312)	600 (1969)	200 (656)	400 (1312)	600 (1969)	200 (656)	400 (1312)	600 (1969)
• Unshielded	m (ft)	300 (984)	600 (1969)	900 (2953)	300 (984)	600 (1969)	900 (2953)	300 (984)	600 (1969)	900 (2953)	300 (984)	600 (1969)	900 (2953)	300 (984)	600 (1969)	900 (2953)
Degree of protection		IP00			IP00			IP00			IP00			IP00		
Dimensions																
• Width	mm (in)	267 (10.51)			267 (10.51)			197 (7.76)			281 (11.06)			281 (11.06)		
• Height	mm (in)	221 (8.70)			220 (8.66)			220 (8.66)			250 (9.84)			250 (9.84)		
• Depth	mm (in)	107 (4.21)			126 (4.96)			128 (5.04)			146 (5.75)			146 (5.75)		
Weight, approx.	kg (lb)	11 (24.3)			10.5 (23.2)			20.5 (45.2)			27.2 (59.9)			30.6 (67.4)		
Certificate of suitability		cURus			cURus			cURus			cURus			cURus		
Suitable for Motor Module in booksize format	Type	6SL3120-1TE24-5AA3			6SL3120-1TE26-0AA3			6SL3120-1TE28-5AA3			6SL3120-1TE31-3AA3			6SL3120-1TE32-0AA4		
• Rated current of the Motor Module	A	45			60			85			132			200		

© Siemens AG 2017

Overview

SINAMICS S120M

SINAMICS S120M is the distributed version of the modular SINAMICS S120 drive system. This drive is a compact and turnkey drive unit that comprises

- AM600 Adapter Module for supplying the distributed drive unit
- Distributed drive unit (synchronous servomotor with integrated power unit and encoder)
- Hybrid cable for power and communication

The power unit is not integrated in the control cabinet, as is normally the case, but in the motor for the driven axis. This brings advantages and freedoms for existing or new machine concepts.

Benefits

- Reduced heat losses in the control cabinet thanks to distributed configuration
- Reduced air conditioning in the control cabinet thanks to the power unit integrated into the motor
- Reduced control cabinet volume thanks to the power unit integrated into the motor
- Increased degree of flexibility for modernizations/retrofits thanks to specified control cabinet sizes
- Less time spent on cabling, because the pre-assembled hybrid cable contains all signal and power cables
- Reduction in overall cable length, because the pre-assembled hybrid cable contains all signal and power cables
- Up to 12 distributed drive units can be operated on one AM600 Adapter Module, depending on their power ratings
- Any number of AM600 Adapter Modules can be operated on one appropriately dimensioned infeed
- Drive-integrated DI/DOs for easy adaptation to the machine environment
- All safety variants and communication variants of the SINAMICS S120 system are also available in SINAMICS S120M
- With the Terminal Module (TM54F), all of the safety functions available in the SINAMICS S120 drive system are available
- Optimum integration into the SIMOTION and SINUMERIK system landscape

Application

Typical SINAMICS S120M applications include the packaging, printing, glass and textile industries.

Design

The SINAMICS S120M distributed drive system comprises the following units:

- AM600 Adapter Module
- Distributed drive unit (1FK7 synchronous servomotor with integrated Motor Module and multi-turn absolute encoder)
- MOTION-CONNECT hybrid cable
  Additional information on cables is provided in section MOTION-CONNECT connection systems.
- DRIVE-CLiQ Extension (necessary with more than 6 distributed drive units)
- Hybrid Cabinet Bushing, optional
- Terminating connector (essential for achieving the degree of protection; included in scope of supply of AM600 Adapter Module)

© Siemens AG 2017

Function

- The 24 V electronics power supply is either provided from an external supply or from a Control Supply Module (CSM). The supply can also be taken from the central drive line-up using the 24 V terminal connector
- Use of Line Modules (Active Line Module, Basic Line Module and Smart Line Module) from the SINAMICS S120 product family
- The AM600 Adapter Module opens a line of distributed drive units. It feeds the DC link, auxiliary voltage, and DRIVE-CLiQ in a hybrid cable
- If several drive units are to be operated, then the possible number depends on the central Control Unit. If an additional Control Unit is used, the closed-loop control signals are fed into the DRIVE-CLiQ line via a DRIVE-CLiQ Extension
- AM600 Adapter Module, DRIVE-CLiQ Extension and Hybrid Cabinet Bushing are not "visible" DRIVE-CLiQ nodes in the topology. The number of DRIVE-CLiQ Extensions is not restricted
- As Control Unit or control, all multi-axis Control Units in the SINAMICS/SIMOTION/SINUMERIK range can generally be used (CU320-2, D4xx-2, CX32-2, NCUxx). The releases of SINAMICS S120M for the corresponding systems are published via the Siemens Industry Online Support Portal: https://support.industry.siemens.com

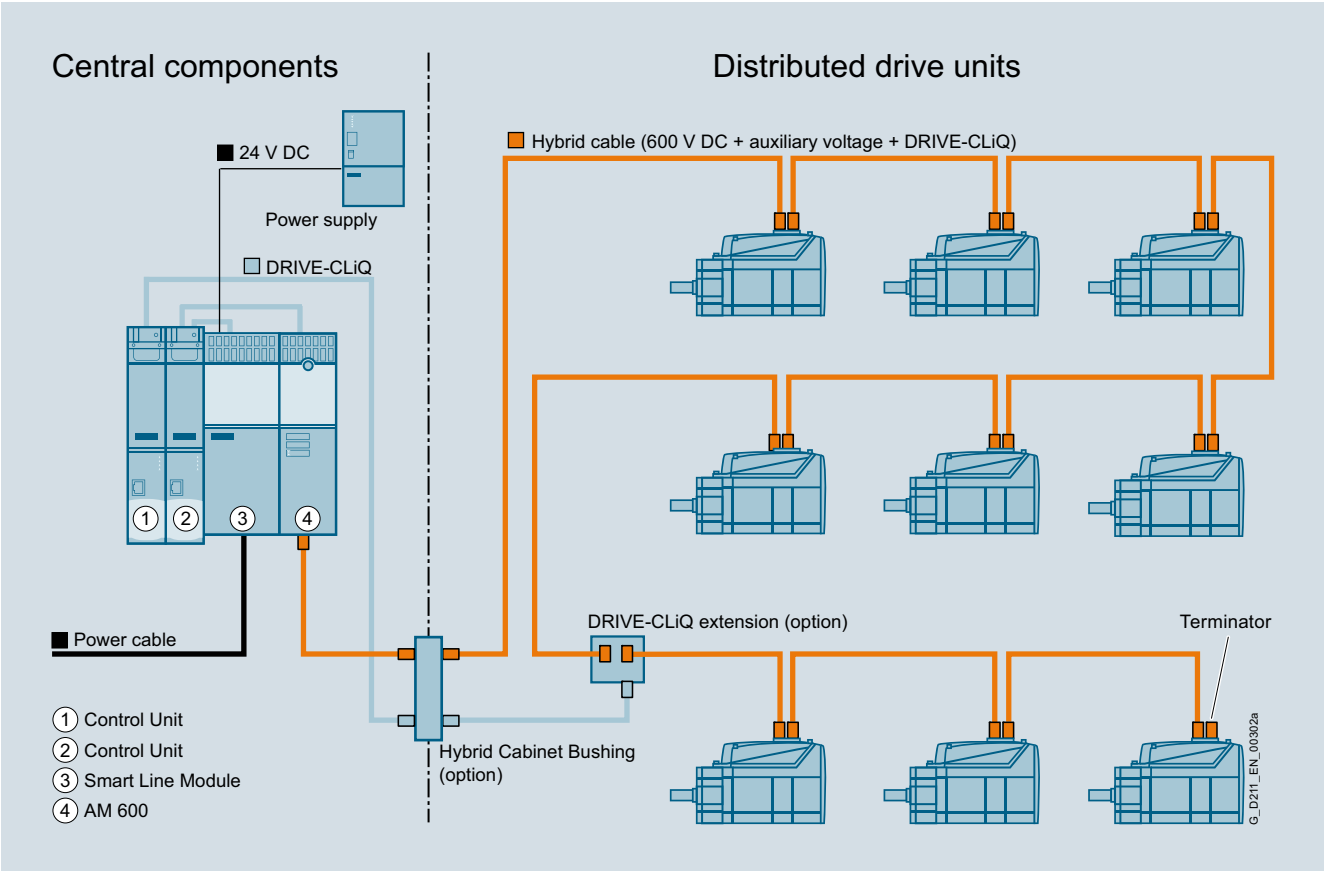

Principle of a SINAMICS S120M topology

© Siemens AG 2017

Integration

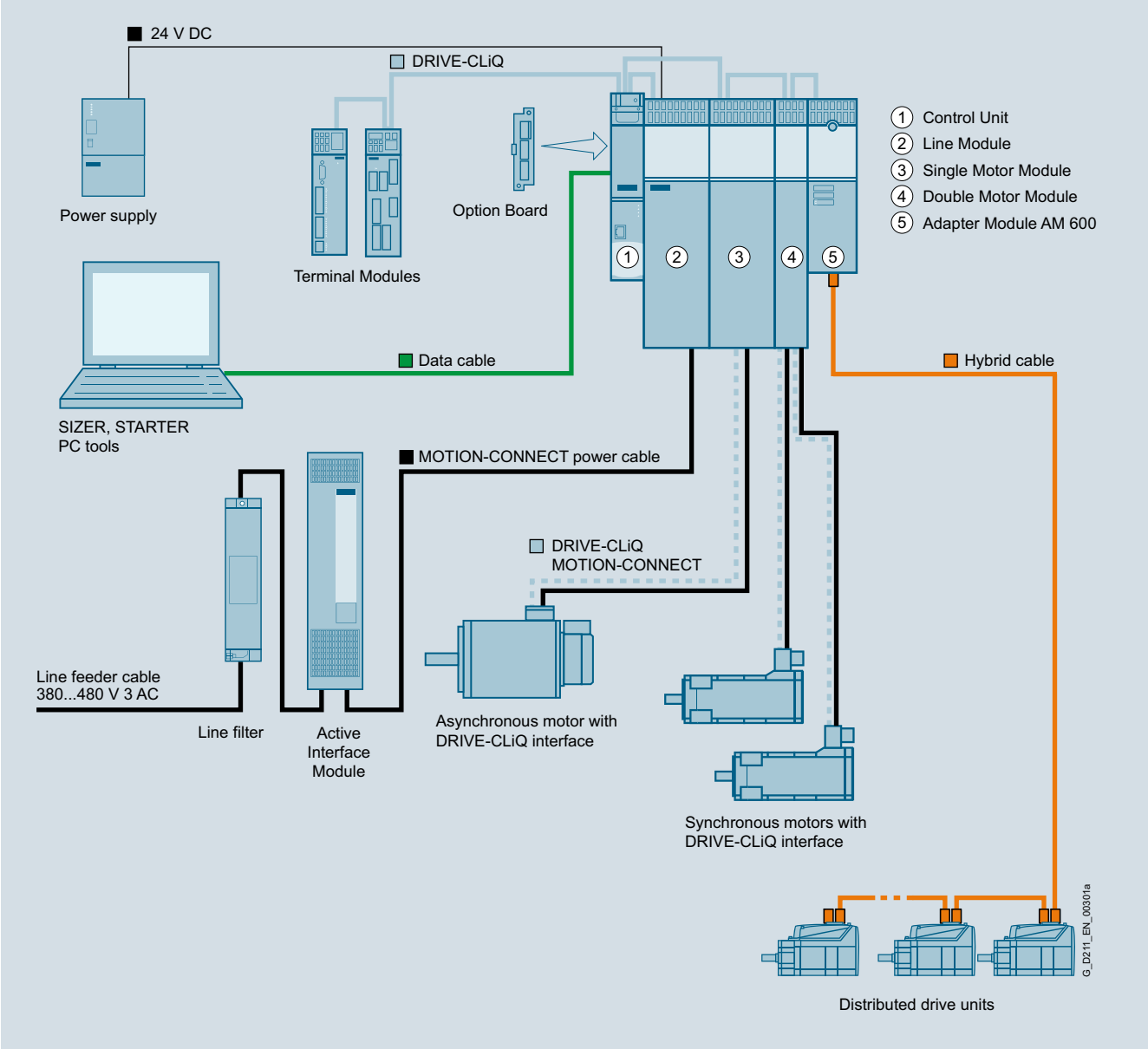

Integration of SINAMICS S120M into the SINAMICS S120 drive system

Modular system for complex drive tasks

SINAMICS S120 solves complex drive tasks for a very wide range of industrial applications and is, therefore, designed as a modular system. Users can choose from many different harmonized components and functions to create a solution that best meets their requirements.

The powerful SIZER for Siemens Drives configuration tool makes it easier to choose and determine the optimum drive configuration.

SINAMICS S120 optimally supports:

- Synchronous and asynchronous motors
- Linear and torque motors
- SINAMICS S120M

System architecture with a central Control Unit:

On the SINAMICS S120, the drive intelligence is combined with closed-loop control functions into Control Units. These units are capable of controlling drives in the vector, servo and U/f modes. They also perform the speed and torque control functions plus other intelligent drive functions for all axes on the drive. Inter-axis connections can be established within a component and easily configured in the STARTER commissioning tool using a mouse.

Functions for higher efficiency

- Basic functions: Speed control, torque control, positioning functions
- Intelligent starting functions for independent restart after power supply interruption
- BICO technology with interconnection of drive-specific DI/DOs for easy adaptation of the drive system to its machine environment

© Siemens AG 2017

Integration (continued)

Functions for higher efficiency (continued)

- Integrated safety functions for rational implementation of safety concepts
- Regulated infeed/regenerative feedback functions for preventing undesirable reactions on the supply, allowing recovery of braking energy and ensuring greater stability against line fluctuations.

DRIVE-CLiQ – the digital interface between SINAMICS components

The SINAMICS S120 components, including the motors and encoders, are interconnected via a joint serial interface called DRIVE-CLiQ. The standardized cables and connectors reduce the variety of different parts and cut storage costs. Encoder evaluations for converting standard encoder signals to DRIVE-CLiQ are available for third-party motors or retrofit applications.

Electronic rating plates in all components

An important digital linkage element of the SINAMICS S120 drive system are the electronic rating plates integrated in every component. They allow all drive components to be detected automatically via DRIVE-CLiQ wiring. As a result, data do not need to be entered manually during commissioning or component replacement – helping to ensure that drives are commissioned successfully!

The electronic rating plate contains all the relevant technical data about that particular component. In the motors, for example, this data includes the parameters of the electric equivalent circuit diagram and characteristic values for the built-in motor encoder. In addition to the technical data, the electronic rating plate includes logistical data (manufacturer ID, article number, and ID). Since this data can be called up electronically on site or remotely, all the components used in a machine can always be individually identified, which helps simplify servicing.

Selection and ordering data

Designation		Article No.
AM600 Adapter Module For connecting SINAMICS S120M to SINAMICS S120		**6SL3555-2BC10-0AA0**
Distributed drive unit Comprising 1FK7 synchronous servomotor with integrated Motor Module and multi-turn absolute encoder		
• Shaft height 36		**6SL3532-6DF 7 1 - 0 R ■■**
• Shaft height 48 short		**6SL3540-6DF 7 1 - 0 R ■■**
• Shaft height 48 long		**6SL3542-6DF 7 1 - 0 R ■■**
• Shaft height 63 short		**6SL3562-6DF 7 1 - 0 R ■■**
• Shaft height 63 long		**6SL3563-6DF 7 1 - 0 R ■■**
Feather key	Without holding brake	**A**
	With holding brake	**B**
Plain shaft	Without holding brake	**G**
	With holding brake	**H**
Degree of protection	IP65 and shaft sealing ring IP67	**1** **2**
MOTION-CONNECT hybrid cable Containing signal and power cables		**6FX8002-7HY ■■ - . . . .** *)
Outlet direction	NDE (rear) / NDE (rear)	**0 0**
	NDE (rear) / DE (front)	**1 1**
	DE (front) / DE (front)	**2 2**
Accessories		
Hybrid Cabinet Bushing Cabinet bushing		**6SL3555-2DA00-0AA0**
DRIVE-CLiQ Extension Necessary for more than six distributed drive units and a second Control Unit		**6SL3555-0AA00-6AB0**
Spacing bolts (4 units) The mounting depth of the AM600 Adapter Module in booksize compact format is increased when it is mounted on these spacing bolts by such an amount that it can be integrated into a drive line-up in booksize format.		**6SL3462-1CC00-0AA0**

Designation	Article No. supplement
Length code for pre-assembled cables	**6FX8002-7HY..- ■ ■ ■ ■**
0 m 100 m (328 ft)	**1** **2**
0 m 10 m (32.8 ft) 20 m (65.6 ft) 30 m (98.4 ft) 40 m (131 ft) 50 m (164 ft) 60 m (197 ft) 70 m (230 ft) 80 m (262 ft) 90 m (295 ft)	**A** **B** **C** **D** **E** **F** **G** **H** **J** **K**
0 m 1 m (3.28 ft) 2 m (6.56 ft) 3 m (9.84 ft) 4 m (13.1 ft) 5 m (16.4 ft) 6 m (19.7 ft) 7 m (22.9 ft) 8 m (26.3 ft) 9 m (29.5 ft)	**A** **B** **C** **D** **E** **F** **G** **H** **J** **K**
0 m 0.1 m (3.94 in) 0.2 m (7.87 in) 0.3 m (11.81 in) 0.4 m (15.75 in) 0.5 m (19.96 in) 0.6 m (23.62 in) 0.7 m (27.56 in) 0.8 m (31.5 in)	**0** **1** **2** **3** **4** **5** **6** **7** **8**
Examples: 1.0 m (3.28 ft)	1 A B 0
2.2 m (7.22 ft)	1 A C 2
8.0 m (26.3 ft)	1 A J 0

Definition of lengths for pre-assembled cables

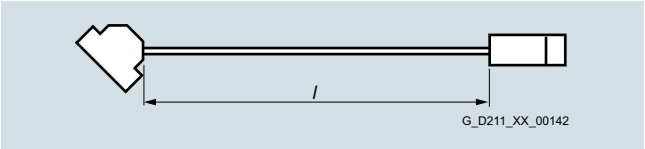

Cable with pre-assembled connectors at both ends

Tolerance:

- Cable lengths up to 10 m (32.8 ft): ± 2 %
- Cable lengths of 10 m (32.8 ft) and longer: ± 1 %

*) Article No. supplement for length code required.

© Siemens AG 2017

Technical specifications

AM600 Adapter Module	6SL3555-2BC10-0AA0
Line connection voltage	380 ... 480 V 3 AC ±10 % (in operation -15 % <1 min)
Line frequency	47 ... 63 Hz
Electronics power supply (input)	
• Electronics voltage	24 V DC -15 ... +20 %
• Electronics current	20 A
• 24 V busbar current-carrying capacity	20 A
Electronics line supply (output)	
• Electronics power supply	48 V DC
• Rated power P_{out} [1]	0.45 kW
• Output current	10 A
DC-link supply	
• DC-link voltage	510 ... 720 V DC
• Output current I_{rated}	25 A
• Base-load current I_{base}	21.3 A
• S6 current I_{S6} 40 %	30 A
• Peak current I_{max}	50 A
• DC-link capacitance	705 µF ±20 %
• DC-link busbar current-carrying capacity	100 A

AM600 Adapter Module	6SL3555-2BC10-0AA0
Rated power, electrical For a DC-link voltage of 600 V DC	14.7 kW
Total power loss Including electronics losses	0.06 kW
Minimum cable length to the 1st axis	3 m (9.84 ft)
Format	Booksize compact
Degree of protection	IP20
Ambient temperature during operation, perm.	0 ... 40 °C (32 ... 104 °F) >40 ... 55 °C (104 ... 131 °F) see derating characteristics of the Line Modules
Dimensions	
• Width	75 mm (2.95 in)
• Height	270 mm (10.63 in)
• Depth	224 mm (8.82 in)
Weight, approx.	3.2 kg (7 lb)

Distributed drive unit (synchronous servomotor with Motor Module and encoder)		6SL3532-6DF71-0R..	6SL3540-6DF71-0R..	6SL3542-6DF71-0R..	6SL3562-6DF71-0R..	6SL3563-6DF71-0R..
Type of construction		IM B5 IM V1 IM V3	IM B5 IM V1 IM V3	IM B5 IM V1 IM V3	IM B5 IM V1 IM V3	IM B5 IM V1 IM V3
Cooling method		Surface convection	Surface convection	Surface convection	Surface convection	Surface convection
Ambient temperature during operation, perm.	°C (°F)	-15 ... +40 (5 ... 104) >40 ... 55 (104 ... 131) with derating	-15 ... +40 (5 ... 104) >40 ... 55 (104 ... 131) with derating	-15 ... +40 (5 ... 104) >40 ... 55 (104 ... 131) with derating	-15 ... +40 (5 ... 104) >40 ... 55 (104 ... 131) with derating	-15 ... +40 (5 ... 104) >40 ... 55 (104 ... 131) with derating
Installation altitude, max.	m (ft)	1000 (3281)	1000 (3281)	1000 (3281)	1000 (3281)	1000 (3281)
Sound pressure level L_{pA} (1 m) acc. to DIN EN ISO 1680, max. Tolerance +3 dB	dB	55	55	55	65	65
Vibrational load in operation Acc. to IEC 68-2-6, DIN EN 60721 Part 3-0 and Part 3-3		Class 3M3	Class 3M3	Class 3M3	Class 3M3	Class 3M3
• Constant deflection in frequency range 2 … 9 Hz	mm (in)	1.5 (0.06)	1.5 (0.06)	1.5 (0.06)	1.5 (0.06)	1.5 (0.06)
• Constant deflection in frequency range 10 … 200 Hz		0.5 × *g*	0.5 × *g*	0.5 × *g*	0.5 × *g*	0.5 × *g*
Shock load in operation Acc. to DIN EN 60721 Part 3-0 and Part 3-3		Class 3M3	Class 3M3	Class 3M3	Class 3M3	Class 3M3
• Max. peak acceleration		7 × *g*	7 × *g*	7 × *g*	7 × *g*	7 × *g*
• Shock duration	ms	22	22	22	22	22
Degree of protection						
• Standard		IP54 (IP65 available soon)	IP65	IP65	IP65	IP65
• Optional		IP67	IP67	IP67	IP67	IP67
Weight, approx.						
• Without brake	kg (lb)	4.1 (9.04)	5.3 (11.6)	7.1 (15.6)	11.9 (26.2)	13.9 (30.6)
• With brake	kg (lb)	4.5 (9.92)	6 (13.2)	7.8 (17.2)	13.3 (29.3)	15.3 (33.7)

[1] Only applies for an electronics input voltage > 26.5 V.

© Siemens AG 2017

Technical specifications (continued)

Distributed drive unit (synchronous servomotor with Motor Module and encoder)		6SL3532-6DF71-0R..	6SL3540-6DF71-0R..	6SL3542-6DF71-0R..	6SL3562-6DF71-0R..	6SL3563-6DF71-0R..
Synchronous servomotor						
Shaft height		36	48 short	48 long	63 short	63 long
Rated speed	rpm	3000	3000	3000	3000	3000
Max. speed	rpm	9000	9000	6400	5600	6400
Rated torque	Nm (lb_f-ft)	0.8 (0.59)	1.05 (0.77)	1.8 (1.33)	2.7 (1.99)	2.2 (1.62)
Torque, max.	Nm (lb_f-ft)	3 (2.21)	4.9 (3.61)	10 (7.38)	19.3 (14.2)	27 (19.9)
Static torque	Nm (lb_f-ft)	1 (0.74)	1.3 (0.96)	2.5 (1.84)	5 (3.69)	7.1 (5.24)
Stall current	A	1.4	1.9	1.8	3.15	5
Moment of inertia						
• Without brake	kgm^2 (lb_f-in-s^2)	0.065 (0.58) × 10^{-3}	0.16 (1.42) × 10^{-3}	0.29 (2.57) × 10^{-3}	1.12 (9.91) × 10^{-3}	1.47 (13.01) × 10^{-3}
• With brake	kgm^2 (lb_f-in-s^2)	0.075 (0.66) × 10^{-3}	0.192 (1.70) × 10^{-3}	0.32 (2.83) × 10^{-3}	1.22 (10.8) × 10^{-3}	1.57 (13.9) × 10^{-3}
Shaft torsional stiffness	Nm/rad (lbf-ft/rad)	4100 (3024)	13000 (9589)	11400 (8409)	26500 (19546)	25000 (18440)
Motor Module						
Electronics power supply	V DC	48	48	48	48	48
Power consumption, max. Electronics power supply	W	12	12	12	12	12
Power consumption, brake	W	10	15	15	20	20
Rated DC link voltage	V DC	600	600	600	600	600
DC-link voltage	V DC	510 ... 720	510 ... 720	510 ... 720	510 ... 720	510 ... 720
Output voltage	V AC	0 ... 0.717 × DC-link voltage	0 ... 0.717 × DC-link voltage	0 ... 0.717 × DC-link voltage	0 ... 0.717 × DC-link voltage	0 ... 0.717 × DC-link voltage
Overvoltage trip	V DC	820 ±2 %	820 ±2 %	820 ±2 %	820 ±2 %	820 ±2 %
Undervoltage trip	V DC	380 ±2 %	380 ±2 %	380 ±2 %	380 ±2 %	380 ±2 %
Current-carrying capacity of the DC link	A	25	25	25	25	25
DC link capacitance	µF	8	24	24	48	48
Pulse frequency	kHz	4	4	4	4	4
Output current						
• Output current I_{rated}	A	1.2	1.7	1.4	1.9	2
• Base-load current I_{base}	A	1.1	2.5	2	1.4	1.5
• S6 current I_{S6} 40 %	A	1.7	1.3	1.1	2.8	2.9
• Peak current I_{max}	A	4.5	7.7	7.6	14	21
Surface temperature	°C (°F)	<100 (212)	<100 (212)	<100 (212)	<100 (212)	<100 (212)
Encoder (absolute encoder AM20DQI)						
Resolution within one revolution	bit	20	20	20	20	20
Traversing range (multi-turn)	Revolutions	4096	4096	4096	4096	4096

Hybrid cable	6FX8002-7HY..-....	
Cross-section	mm^2	4
Max. line length per AM600 Adapter Module	m (ft)	100 (328)
Max. current-carrying capacity	A	25

More information

Additional information is available at
www.siemens.com/sinamics-s120m

© Siemens AG 2017

Overview

With its separate power unit and Control Unit, the SINAMICS S120 drive system can be perfectly adapted to a wide variety of different drive tasks.

The Control Unit is selected according to the number of drives to be controlled and the required performance level, while the power unit must be rated to meet the energy requirements of the system. The connection between the Control Unit and power unit is made very simply using the DRIVE-CLiQ digital system interface.

The following drive units are available in the chassis format:

- Power Modules
- Basic Line Modules
- Smart Line Modules (only available in the air-cooled version)
- Active Line Modules
- Active Interface Modules
- Motor Modules

Power Modules

The simplest version of a SINAMICS S120 drive system comprises a CU310-2 Control Unit and a Power Module.

In Power Modules specifically designed for single drives without regenerative feedback into the line supply, the line-side infeed and the motor-side power unit are combined in one unit.

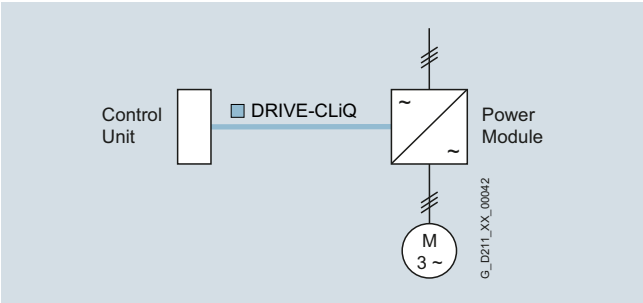

Generated energy produced during braking is converted to heat in braking resistors.

The Control Unit is plugged onto the Power Module; in addition to the complete control intelligence, the Control Unit also has all the drive interfaces for communication with higher-level systems and interfacing of add-on components.

Line Modules

Line Modules contain the central line infeed for the DC link. Various Line Modules can be selected to address the various application profiles:

- Basic Line Modules
- Smart Line Modules
- Active Line Modules

Basic Line Modules

Basic Line Modules are designed only for infeed operation, i.e. they are not capable of recovering energy to the line supply. If regenerative energy is produced, e.g. when drives brake, it must be converted into heat using a Braking Module and a braking resistor.
A line filter can be optionally installed in order to ensure compliance with the limits stipulated for Category C2 in EN 61800-3.

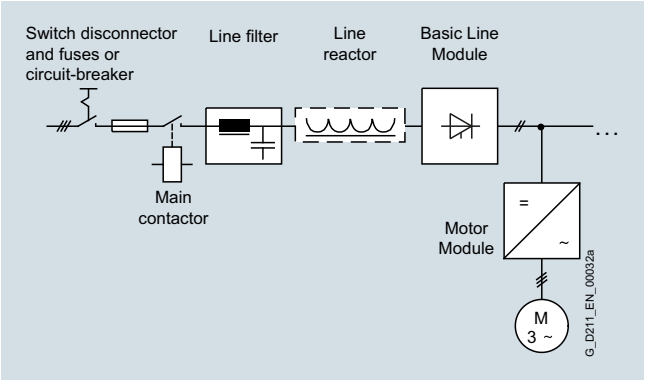

Smart Line Modules

Smart Line Modules can supply energy and return regenerative energy to the supply system. A Braking Module and braking resistor are required only if the drives need to be decelerated in a controlled manner after a power failure (i.e. when energy cannot be recovered to the supply). For an infeed using a Smart Line Module, the appropriate line reactor is required.
A line filter can be optionally installed in order to ensure compliance with the limits stipulated for Category C2 in EN 61800-3.

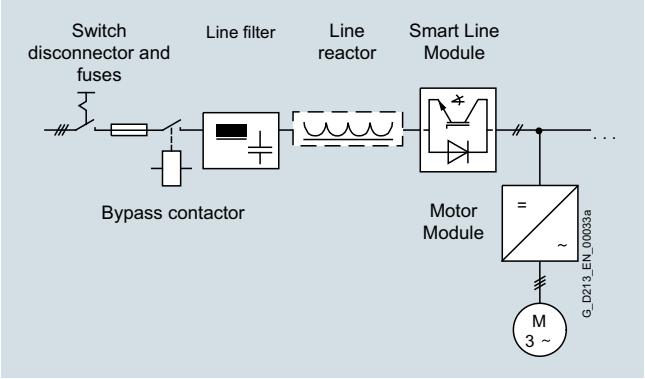

© Siemens AG 2017

Overview (continued)

Active Line Modules

Active Line Modules can supply energy and return regenerative energy to the supply system. A Braking Module and braking resistor are required only if the drives need to be decelerated in a controlled manner after a power failure (i.e. when energy cannot be recovered to the supply).

In contrast to Basic Line Modules and Smart Line Modules, Active Line Modules generate a controlled DC voltage that is kept constant despite fluctuations in the line supply voltage if the line supply voltage fluctuates within the permitted tolerance range. Active Line Modules draw a virtually sinusoidal current from the supply which limits any harmful harmonics. All of the components necessary to operate an Active Line Module are integrated in the Active Interface Module.
A line filter can be optionally installed in order to ensure compliance with the limits stipulated for Category C2 in EN 61800-3.

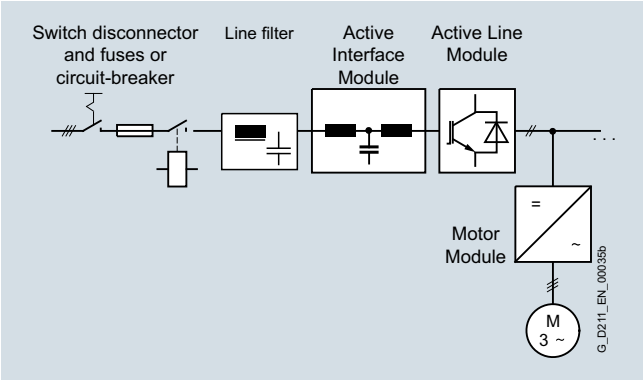

Motor Modules

A voltage DC link and an inverter for supplying a motor are integrated in the Motor Module.

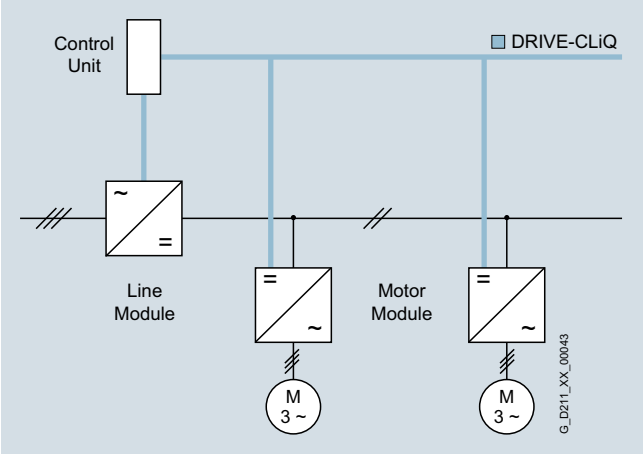

Motor Modules are designed for multi-axis drive systems and are controlled by either a CU320-2 or a SIMOTION D Control Unit. Motor Modules are interconnected through the DC link.

One or several Motor Modules are supplied with energy for the motors via the DC link. Both synchronous and induction motors can be operated.

Since the Motor Modules share the same DC link, they can exchange energy with one another, i.e. if one Motor Module operating in generator mode produces energy, the energy can be used by another Motor Module operating in motor mode. The DC link is supplied with line supply voltage by a Line Module.

Control Units

The control intelligence for all the drive axes integrated in the multi-axis group is combined in the Control Units. They also feature drive-related inputs/outputs and interfaces for communicating with higher-level controllers. Control Units are available with different ranges of functions and with different performance levels.

System components

The structure of the drive system is defined by selecting the Control Unit and Power Module or Line Module and Motor Modules. The additional components provided allow optimum adaptation of the drive system to the application.

These components are subdivided into:

- **Line-side components**, e.g. line reactors and line filters
- **DC link components** e.g. Braking Modules and braking resistors
- **Motor-side components**, e.g. motor reactors and dv/dt filters plus VPL, sine-wave filters
- **Supplementary system components**, e.g. Terminal Modules, Operator Panels, and Communication Boards
- **Encoder system interface** for connecting various encoder types to SINAMICS S120

DRIVE-CLiQ – the digital interface between the components

SINAMICS S120 components, including motors and encoders, are equipped with the high-performance DRIVE-CLiQ system interface.
Line and Motor Modules for example are connected to the Control Unit – and Terminal Modules and Sensor Modules to the drive system via DRIVE-CLiQ – simply and efficiently. Motors that also have this interface can be directly connected to the drive system.

Converter boards (Sensor Modules) for converting standard encoder signals to DRIVE-CLiQ are available for third-party motors or retrofit applications.

The electronic rating plate

An important digital linkage element of the SINAMICS S120 drive system are the electronic type plates integrated in every component. They allow all drive components to be automatically identified via the DRIVE-CLiQ link.

The electronic type plate contains all the relevant technical data about that particular component. In addition to the technical data, the electronic type plate includes logistical data (manufacturer ID, article number and ID). Since this data can be called up electronically on site or remotely, all the components used in a machine can always be individually identified, which helps simplify servicing.

© Siemens AG 2017

Overview (continued)

Painted modules

The following devices are equipped as standard with coated modules:

- Blocksize format units
- Booksize format units
- Chassis format units
- Control Units
- Sensor Modules
- Terminal Modules
- Advanced Operator Panel (AOP30)

The coating on the modules protects the sensitive SMD components against corrosive gases, chemically active dust and moisture.

Nickel-plated busbars

All of the copper busbars used are nickel-plated in order to achieve the best possible immunity to environmental effects. Further, it is possible to eliminate having to clean the contacts at the customer connections, which is required for bare copper connections.

Note:

For some components, parts of the copper busbars cannot be nickel-plated for technical reasons.

Function

Communication with higher-level controller and customer terminal block

As customer interface to a higher-level control, as standard there is a PROFIBUS or PROFINET communication interface on the Control Unit CU320-2; there are also expansions such as the Terminal Module TM31, the Terminal Board TB30 and modules to communicate via CANopen or EtherNet/IP.

These interfaces can be used to connect the system to the higher-level controller using analog and digital signals, or to connect additional units.

For additional information, please refer to the SINAMICS Low Voltage Engineering Manual.

Open-loop and closed-loop control functions

SINAMICS S120 can use a dynamic, high-precision closed-loop vector control (drive object type VECTOR), or a highly dynamic closed-loop servo control (drive object type SERVO).

Software and protective functions

The software functions available as standard are described below:

Software and protective functions	Description
Setpoint input	The setpoint can be specified both internally and externally; internally as a fixed setpoint, motorized potentiometer setpoint or jog setpoint, externally via the communications interface or an analog input. The internal fixed setpoint and the motorized potentiometer setpoint can be switched or adjusted via control commands from any interface.
Motor identification	The automatic motor identification function makes commissioning faster and easier and optimizes closed-loop control of the drive.
Ramp-function generator	A user-friendly ramp-function generator with separately adjustable ramp-up and ramp-down times, together with adjustable rounding times in the lower and upper speed ranges, allows the drive to be smoothly accelerated and braked. This results in a good speed control response and contributes to the reduction of stress on the mechanical system. The down ramp can be parameterized separately for a quick stop.
$V_{dc\ max}$ controller	The $V_{dc\ max}$ controller automatically prevents overvoltages in the DC link, if the set down ramp is too short, for example. This may also extend the set ramp-down time. Note: This function only makes sense for single-axis applications.
Kinetic buffering (KIP)	For brief line supply failures, the kinetic energy of the rotating drive is used to buffer the DC link and therefore prevents fault trips. The drive converter remains operational as long as the drive can provide regenerative energy as a result of its motion and the DC link voltage does not drop below the shutdown threshold. When the line supply recovers within this time, the drive is again bumplessly accelerated up to its setpoint speed.
Automatic restart	The automatic restart switches the drive on again when the power is restored after a power failure, and ramps up to the current speed setpoint.
Flying restart	The flying restart function allows the converter to be switched to a motor that is still turning. With the voltage sensing capability provided by the optional VSM10, the flying restart time for large induction motors can be significantly reduced because the motor does not need to be de-magnetized.
Technology controller (PID)	Using the technology controller (PID controller) function module, level or flow controls and complex tension controls can be implemented, for example. The existing D component can act both on the system deviation well as on the actual value (factory setting). The P, I, and D components are set separately.
Free function blocks (FFB)	Using the freely programmable function blocks, it is easy to implement logic and arithmetic functions for controlling the SINAMICS drive. The blocks can be programmed at the operator panel or the STARTER commissioning tool.
Drive Control Chart (DCC)	Drive Control Chart (DCC) is an additional tool for the easy configuration of technological functions for SINAMICS. The block library contains a large selection of control, arithmetic and logic blocks as well as extensive open-loop and closed-loop control functions. The user-friendly DCC editor enables easy graphics-based configuration, allows control loop structures to be clearly represented and provides a high degree of reusability of charts that have already been created. DCC is an add-on for the STARTER commissioning tool (see Section Engineering tools).
SINAMICS Technology Extensions (SINAMICS TEC)	The SINAMICS TEC are configurable functions or Siemens technologies that can be added to extend firmware functions. These extensions are designed to allow implementation of highly complex, application-specific tasks for various sectors – such as storage and retrieval machines. Additional information about Technology Extensions (TEC) is provided in Section Technology functions.
I^2t sensing for motor protection	A motor model stored in the converter software calculates the motor temperature based on the current speed and load. More exact measurement of the temperature, which also takes into account the influence of the ambient temperature, is possible by means of direct temperature measurement using KTY84 sensors in the motor winding.
Motor temperature evaluation	Motor protection by evaluating a KTY84, Pt1000, PTC or Pt100 temperature sensor. When a KTY84 temperature sensor is connected, the limit values can be set for alarm or shutdown. When a PTC thermistor is connected, the system reaction to triggering of the thermistor (alarm or trip) can be defined.

© Siemens AG 2017

Function (continued)

Software and protective functions	Description
Motor blocking protection	A blocked motor is detected and protected against thermal overloading by a fault trip.
Brake control	"Simple brake control" for control of holding brakes: The holding brake is used to secure drives against unwanted motion when deactivated. "Extended brake control" function module for complex brake control, e.g. for motor holding brakes and operational brakes: When braking with a feedback signal, the brake control reacts to the feedback signal contacts of the brake.
Write protection	Write protection to prevent unintentional changing of the setting parameters (without password function).
Know-how protection	Know-how protection for encrypting stored data, e.g. to protect configuration know-how, and to protect against changes and duplication (with password function).
Web server	The integrated web server provides information about the drive unit via its web pages. The web server is accessed using a web browser via unsecured (http) or secured transfer protocol (https).

Power unit protection

Power unit protection	Description
Ground fault monitoring at the output	A ground fault at the output is detected by a total current monitor and results in shutdown in grounded systems.
Electronic short-circuit protection at the output	A short-circuit at the output (e.g. at the converter output terminals, in the motor cable or in the motor terminal box) is detected and the converter shuts down with a "fault".
Thermal overload protection	An alarm is issued first when the overtemperature threshold responds. If the temperature continues to rise, the unit either shuts down or independently adjusts the pulse frequency or output current so that thermal load is reduced. Once the cause of the fault has been eliminated (e.g. cooling has been improved), the original operating values are automatically resumed.

Technical specifications

The most important directives and standards are listed below. These are used as the basis for the SINAMICS S120 built-in units in chassis format and they must be carefully observed to achieve an EMC-compliant configuration that is safe both functionally and in operation.

European directives	
2014/35/EU	Low Voltage Directive: Directive of the European Parliament and Council of February 26, 2014 for the harmonization of the laws of the member states relating to the provision of electrical equipment designed for use within certain voltage limits on the market (amended version)
2014/30/EU	EMC Directive: Directive of the European Parliament and Council of February 26, 2014 for the harmonization of the laws of the member states relating to electromagnetic compatibility (amended version)
2006/42/EC	Machinery Directive: Directive of the European Parliament and Council of May 17, 2006, on machinery and amending Directive 95/16/EC (amended version).
European standards	
EN ISO 3744	Acoustics – Determination of the sound power level and sound energy level for noise sources that result from sound pressure measurements – envelope surface procedure of the accuracy class 2 for a largely free sound field over a reflecting plane
EN ISO 13849-1	Safety of machinery – safety-related parts of control systems; Part 1: General design guidelines (ISO 13849-1: 2006) (replaces EN 954-1)
EN 60146-1-1	Semiconductor converters – General requirements and line-commutated converters Part 1-1: Specification of basic requirements
EN 60204-1	Safety of machinery – Electrical equipment of machines; Part 1: General requirements
EN 60529	Degrees of protection provided by enclosures (IP code)
EN 61508-1	Functional safety of electrical/electronic/programmable electronic safety-related systems Part 1: General requirements

European standards (continued)	
EN 61800-2	Adjustable speed electrical power drive systems Part 2: General requirements – Rating specifications for low voltage adjustable frequency AC power drive systems
EN 61800-3	Adjustable speed electrical power drive systems Part 3: EMC requirements and specific test methods
EN 61800-5-1	Adjustable speed electrical power drive systems Part 5: Safety requirements Main section 1: Electrical and thermal requirements
EN 61800-5-2	Adjustable speed electrical power drive systems Part 5-2: Safety requirements – Functional safety (IEC 61800-5-2: 2007)
North American standards	
UL 508A	Industrial Control Panels
UL 508C	Power Conversion Equipment
UL 61800-5-1	Adjustable Speed Electrical Power Drive Systems – Part 5-1: Safety requirements – Electrical, thermal and energy
CSA C22.2 No. 14	Industrial Control Equipment
Certificates of suitability	
cULus, cURus	Testing by UL (Underwriters Laboratories, www.ul.com) according to UL and CSA standards

© Siemens AG 2017

Technical specifications

General technical specifications

Unless clearly specified otherwise, the following technical data are valid for all the following components of the air-cooled SINAMICS S120 drive system in the chassis format.

Electrical specifications	
Rated voltages	380 ... 480 V 3 AC ±10 % (-15 % <1 min) 500 ... 690 V 3 AC ±10 % (-15 % <1 min)
Line supply types	Grounded TN/TT systems and non-grounded IT systems
Line frequency	47 ... 63 Hz
Overvoltage category	III to EN 61800-5-1
Electronics power supply	24 V DC, -15 % +20 % implemented as PELV circuit in accordance with EN 61800-5-1 Ground = negative pole grounded via the electronics
Rated short-circuit current per IEC, in conjunction with the specified fuses or circuit breakers	
• 1.1 ... 447 kW	65 kA
• 448 ... 671 kW	84 kA
• 672 ... 1193 kW	170 kA
• > 1194 kW	200 kA
Rated short-circuit current SCCR (Short Circuit Current Rating) according to UL508C (up to 600 V), in conjunction with the specified fuses or circuit breakers	
• 1.1 ... 447 kW	65 kA
• 448 ... 671 kW	84 kA
• 672 ... 1193 kW	170 kA
• > 1194 kW	200 kA
Control method	Vector/servo control with and without encoder or V/f control
Fixed speeds	15 fixed speeds plus 1 minimum speed, parameterizable (in the default setting, 3 fixed setpoints plus 1 minimum speed are selectable using terminal block/ PROFIBUS/PROFINET)
Skippable speed ranges	4, parameterizable
Setpoint resolution	0.001 rpm digital (14 bits + sign) 12 bits analog
Braking operation	With Active Line Modules and Smart Line Modules, four-quadrant operation as standard (energy recovery). With Basic Line Modules, two-quadrant operation as standard, braking by means of an optional braking chopper, or alternatively by a Motor Module.
Mechanical specifications	
Degree of protection	IP00 or IP20 depending on type
Protection class	I acc. to EN 61800-5-1
Touch protection	EN 50274/DGUV regulation 3 when used as intended
Cooling method	Forced air cooling AF according to EN 60146

© Siemens AG 2017

Technical specifications (continued)

Ambient conditions	Storage [1]	Transport [1]	Operation
Ambient temperature	-25 ... +55 °C (-13 ... +131 °F) Class 1K4 acc. to EN 60721-3-1	-25 ... +70 °C (-13 ...+158 °F) Class 2K4 acc. to EN 60721-3-2	Line-side components, Power Modules, Line Modules and Motor Modules: 0 … 40 °C (32 ... 104 °F) without derating Up to 55 °C (131 °F), see derating data Control Units, supplementary system components, and Sensor Modules: 0 ... 55 °C (32 ... 131 °F) (for operation in control cabinet) DC link components and motor-side components: 0 ... 55 °C (32 ... 131 °F)
Relative humidity Condensation, splashwater, and ice formation not permitted (EN 60204, Part 1)	5 ... 95 % Class 1K4 acc. to EN 60721-3-1	5 ... 95 % at 40 °C Class 2K3 acc. to EN 60721-3-2	5 ... 95 % Class 3K3 acc. to EN 60721-3-3
Environmental class/harmful chemical substances	Class 1C2 acc. to EN 60721-3-1	Class 2C2 acc. to EN 60721-3-2	Class 3C2 acc. to EN 60721-3-3
Organic/biological influences	Class 1B1 acc. to EN 60721-3-1	Class 2B1 acc. to EN 60721-3-2	Class 3B1 acc. to EN 60721-3-3
Degree of pollution	2 acc. to EN 61800-5-1		
Installation altitude	Up to 2000 m (6562 ft) above sea level without derating >2000 m (6562 ft) above sea level, see derating data		
Mechanical stability	**Storage [1]**	**Transport [1]**	**Operation**
Vibratory load	–	Class 2M2 acc. to EN 60721-3-2	Test values acc. to EN 60068-2-6 test Fc: • 10 ... 58 Hz with constant deflection 0.075 mm • 58 ... 150 Hz with constant acceleration 9.81 m/s^2 (1 × *g*)
Shock load	–	Class 2M2 acc. to EN 60721-3-2	Test values according to EN 60068-2-27 test Ea: 98 m/s^2 (10 × *g*)/20 ms
Compliance with standards			
Conformances/ proofs of suitability according to	CE (EMC Directive No. 2014/30/EU, Low Voltage Directive No. 2014/35/EU and Machinery Directive 2006/42/EC for functional safety) RCM cULus (only for devices connected to line supply voltages 380 ... 480 V 3 AC and 500 ... 600 V 3 AC)		
Radio interference suppression	SINAMICS S120 chassis format units are not designed for connection to the public grid (first environment). Radio interference suppression is compliant with the EMC product standard for variable-speed drives EN 61800-3, "Second environment" (industrial line supplies). EMC disturbances can occur when connected to the public grid. However, if additional measures are taken (e.g. → line filter), they can also be operated in the "first environment". For further information, see section configuration notes.		

Deviations from the specified class are underlined.

[1] In transport packaging.

© Siemens AG 2017

Characteristic curves

Derating data, chassis format

Air-cooled SINAMICS G120 chassis format units and the associated system components are rated for an ambient temperature of 40 °C (104 °F) and installation altitudes up to 2000 m (6562 ft) above sea level.

At ambient temperatures > 40 °C (104 °F), the output current must be reduced. Ambient temperatures above 55 °C (131 °F) are not permissible.

At installation altitudes > 2000 m (6562 ft) above sea level, it must be taken into account that the air pressure, and therefore air density, decreases as the height increases. As a consequence, the cooling efficiency and the insulation capacity of the air also decrease.

Due to the reduced cooling efficiency, it is necessary, on the one hand, to reduce the ambient temperature and on the other hand, to reduce the heat loss in the built-in unit by reducing the output current, whereby ambient temperatures lower than 40 °C (104 °F) may be offset to compensate.

The following table lists the permissible output currents depending on the installation altitude and ambient temperature. The specified values already include a permitted compensation in respect of installation altitude and ambient temperatures < 40 °C (104 °F) (temperature at the air intake of the built-in unit).

The values apply under the precondition that a cooling air flow through the devices is guaranteed as specified in the technical specifications.

As additional measure for installation altitudes from 2000 m (6562 ft) up to 5000 m (16405 ft), an isolating transformer is required in order to reduce transient overvoltages according to EN 60664-1.
For additional information, please refer to the SINAMICS Low Voltage Configuration Manual.

Current-derating factors for SINAMICS S120 chassis units as a function of the ambient/air intake temperature and the installation altitude

Installation altitude above sea level	**Current derating factor** (as a percentage of the rated current) for an ambient / air intake temperature of							
m (ft)	20 °C (68° F)	25 °C (77° F)	30 °C (86° F)	35 °C (95° F)	40 °C (104 °F)	45 °C (113° F)	50 °C (122° F)	55 °C (131° F)
0 ... 2000 (0 ... 6562)						**93.3 %**	**86.7 %**	**80.0 %**
2001 ... 2500 (6565 ... 8202)					**96.3 %**			
2501 ... 3000 (8205 ... 9843)		100 %		**98.7 %**				
3001 ... 3500 (9846 ... 11483)								
3501 ... 4000 (11486 ... 13124)			**96.3 %**					
4001 ... 4500 (13127 ... 14764)		**97.5 %**						
4501 ... 5000 (14767 ... 16405)	**98.2 %**							

Current derating for Power Modules and Motor Modules in chassis format as a function of the pulse frequency

To reduce motor noise or to increase output frequency, the pulse frequency can be increased relative to the factory setting (1.25 kHz or 2 kHz). When the pulse frequency is increased, the derating factor of the output current must be taken into account. This derating factor must be applied to the currents specified in the technical specifications.

For additional information, please refer to the SINAMICS Low Voltage Engineering Manual.

The following table lists the rated output currents of the SINAMICS S120 Power Modules and Motor Modules with pulse frequency set in the factory as well as the current derating factors (permissible output currents referred to the rated output current) for higher pulse frequencies.

Derating factor of the output current as a function of the pulse frequency for units with a rated pulse frequency of 2 kHz

Power Module Motor Module	Type rating at 400 V	Output current at 2 kHz	**Derating factor** at pulse frequency				
6SL3310-... 6SL3320-...	kW (hp)	A	2.5 kHz	4 kHz	5 kHz	7.5 kHz	8 kHz
380 ... 480 V 3 AC							
1TE32-1AA3	110 (150)	210	95 %	82 %	74 %	54 %	50 %
1TE32-6AA3	132 (200)	260	95 %	83 %	74 %	54 %	50 %
1TE33-1AA3	160 (250)	310	97 %	88 %	78 %	54 %	50 %
1TE33-8AA3	200 (300)	380	96 %	87 %	77 %	54 %	50 %
1TE35-0AA3	250 (400)	490	94 %	78 %	71 %	53 %	50 %

© Siemens AG 2017

Characteristic curves (continued)

Derating factor of the output current as a function of the pulse frequency for units with a rated pulse frequency of 1.25 kHz

Motor Module	Type rating at 400 V, 50 Hz (460 V, 60 Hz) or 690 V, 50 Hz (575 V, 60 Hz)	Output current at 1.25 kHz	**Derating factor** at pulse frequency				
6SL3320-...	kW (hp)	A	2 kHz	2.5 kHz	4 kHz	5 kHz	7.5 kHz
380 ... 480 V 3 AC							
1TE36-1AA3	315 (500)	605	83 %	72 %	64 %	60 %	40 %
1TE37-5AA3	400 (600)	745	83 %	72 %	64 %	60 %	40 %
1TE38-4AA3	450 (700)	840	87 %	79 %	64 %	55 %	40 %
1TE41-0AA3	560 (800)	985	92 %	87 %	70 %	60 %	50 %
1TE41-2AA3	710 (1000)	1260	92 %	87 %	70 %	60 %	50 %
1TE41-4AA3	800 (1150)	1405	97 %	95 %	74 %	60 %	50 %
500 ... 690 V 3 AC							
1TG28-5AA3	75 (75)	85	93 %	89 %	71 %	60 %	40 %
1TG31-0AA3	90 (75)	100	92 %	88 %	71 %	60 %	40 %
1TG31-2AA3	110 (100)	120	92 %	88 %	71 %	60 %	40 %
1TG31-5AA3	132 (150)	150	90 %	84 %	66 %	55 %	35 %
1TG31-8AA3	160 (150)	175	92 %	87 %	70 %	60 %	40 %
1TG32-2AA3	200 (200)	215	92 %	87 %	70 %	60 %	40 %
1TG32-6AA3	250 (250)	260	92 %	88 %	71 %	60 %	40 %
1TG33-3AA3	315 (300)	330	89 %	82 %	65 %	55 %	40 %
1TG34-1AA3	400 (400)	410	89 %	82 %	65 %	55 %	35 %
1TG34-7AA3	450 (450)	465	92 %	87 %	67 %	55 %	35 %
1TG35-8AA3	560 (600)	575	91 %	85 %	64 %	50 %	35 %
1TG37-4AA3	710 (700)	735	87 %	79 %	64 %	55 %	25 %
1TG38-1AA3	800 (800)	810	97 %	95 %	71 %	55 %	35 %
1TG38-8AA3	900 (900)	910	92 %	87 %	67 %	55 %	33 %
1TG41-0AA3	1000 (1000)	1025	91 %	86 %	64 %	50 %	30 %
1TG41-3AA3	1200 (1250)	1270	87 %	79 %	55 %	40 %	25 %

The following tables list the maximum achievable output frequency as a function of the pulse frequency:

Maximum output frequencies achieved by increasing the pulse frequency in Vector mode

Pulse frequency	Max. achievable output frequency
1.25 kHz	100 Hz
2 kHz	160 Hz
2.5 kHz	200 Hz
4 kHz	300 Hz

Maximum output frequencies achieved by increasing the pulse frequency in Servo mode

Pulse frequency	Max. achievable output frequency
2 kHz	300 Hz
4 kHz	300/550 Hz [1]

[1] Higher frequencies on request. For further information, see https://support.industry.siemens.com/cs/document/104020669

© Siemens AG 2017

Characteristic curves (continued)

Overload capability

SINAMICS S120 chassis units have an overload reserve, e.g. to handle breakaway torques. If larger surge loads occur, this must be taken into account in the configuration. For drives with overload requirements, the appropriate base load current must, therefore, be used as a basis for the required load.

The permissible overload levels are valid under the prerequisite that the drive units are operated with their base-load current before and after the overload condition based on a duty cycle duration of 300 s.

For temporary, periodic duty cycles with high variations of load within the duty cycle, the relevant sections of the SINAMICS Low Voltage Engineering Manual must be observed.

Power Modules and Motor Modules

The base load current for a low overload I_L is based on a duty cycle of 110 % for 60 s or 150 % for 10 s.

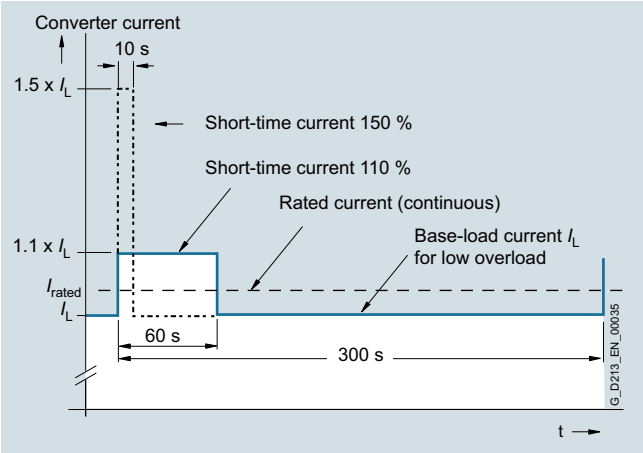

Low overload

The base load current for a high overload I_H is based on a duty cycle of 150 % for 60 s or 160 % for 10 s.

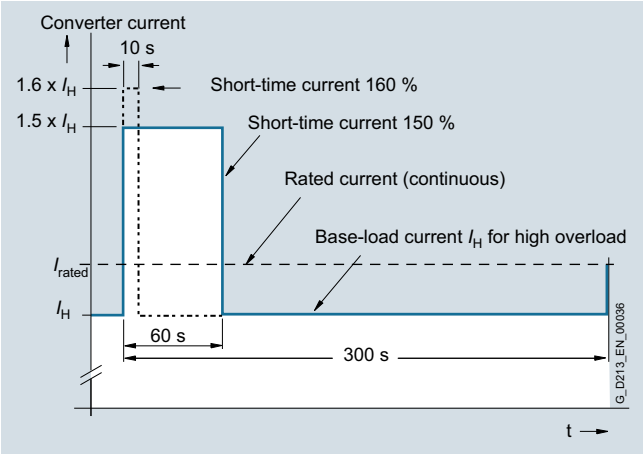

High overload

Line Modules

The base-load current for a high overload $I_{H\,DC}$ is the basis for a duty cycle of 150 % for 60 s or $I_{max\,DC}$ for 5 s.

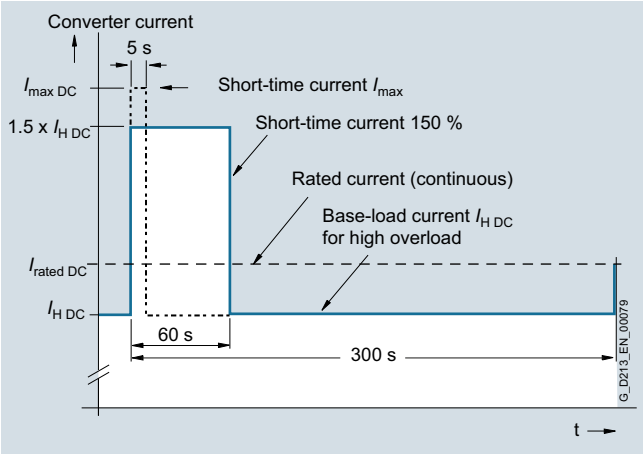

High overload

© Siemens AG 2017

Air-cooled Power Modules in chassis format

Overview

The Power Module comprises a line rectifier, a DC link and an inverter to supply the motor.

Power Modules are designed for drives that are not capable of regenerating energy to the mains supply. Regenerative energy produced while braking is converted to heat using braking resistors.

Power Modules in the chassis format can be connected to grounded TN/TT systems and non-grounded IT systems.

Design

The Power Modules have the following interfaces as standard:

- 1 line supply connection
- 1 motor connection
- 1 connection for the 24 V DC electronics power supply
- 1 DC link connection (DCPA, DCNA) for connecting a Braking Module
- 1 DC link connection (DCPS, DCNS) for connecting a dv/dt filter
- 3 DRIVE-CLiQ sockets
- 1 temperature sensor input for KTY84-130, Pt1000, PTC or Pt100 (Pt1000 can be used from firmware V4.7 HF17)
- 1 connection for Safe Brake Adapter
- 1 connection for Safety Integrated
- 2 PE connections

The Power Modules are controlled by the CU310-2 Control Unit that can be integrated into the Power Module.

The status of the Power Modules is indicated via three LEDs.

The scope of supply of the Power Modules includes:

- 1 DRIVE-CLiQ cable for connection to the Control Unit
- 1 24 V DC connecting cable for the power supply to the Control Unit
- 1 mounting plate for attaching the Control Unit
- 1 set of warning labels in 30 languages (BG, CN, CZ, DE, DK, EE, ES, FI, FR, GB, GR, HU, IE, IS, IT, JP, KR, LT, LV, MT, NL, NO, PL, PT, RO, RU, SE, SI, SK, TR)

Application in multi-axis systems

Power Modules in chassis format can also be connected directly via DRIVE-CLiQ to a separate CU320-2 or SIMOTION D4x5-2 Control Unit or Controller Extension CX32-2. The appropriate DRIVE-CLiQ cable for the required distance must be ordered (see section MOTION-CONNECT connection systems).

Selection and ordering data

Type rating at 400 V, 50 Hz (460 V, 60 Hz) kW (hp)	Rated output current A	**Power Module** Article No.
Line voltage 380 ... 480 V 3 AC		
110 (150)	210	**6SL3310-1TE32-1AA3**
132 (200)	260	**6SL3310-1TE32-6AA3**
160 (250)	310	**6SL3310-1TE33-1AA3**
200 (300)	380	**6SL3310-1TE33-8AA3**
250 (400)	490	**6SL3310-1TE35-0AA3**

Description	**Article No.**
Accessories	
Dust protection blanking plugs (50 units) For DRIVE-CLiQ port	**6SL3066-4CA00-0AA0**

© Siemens AG 2017

Integration

The Power Modules communicate with the higher-level control module via DRIVE-CLiQ. The Control Unit in this case could be a CU310-2, CU320-2 or a SIMOTION D Control Unit.

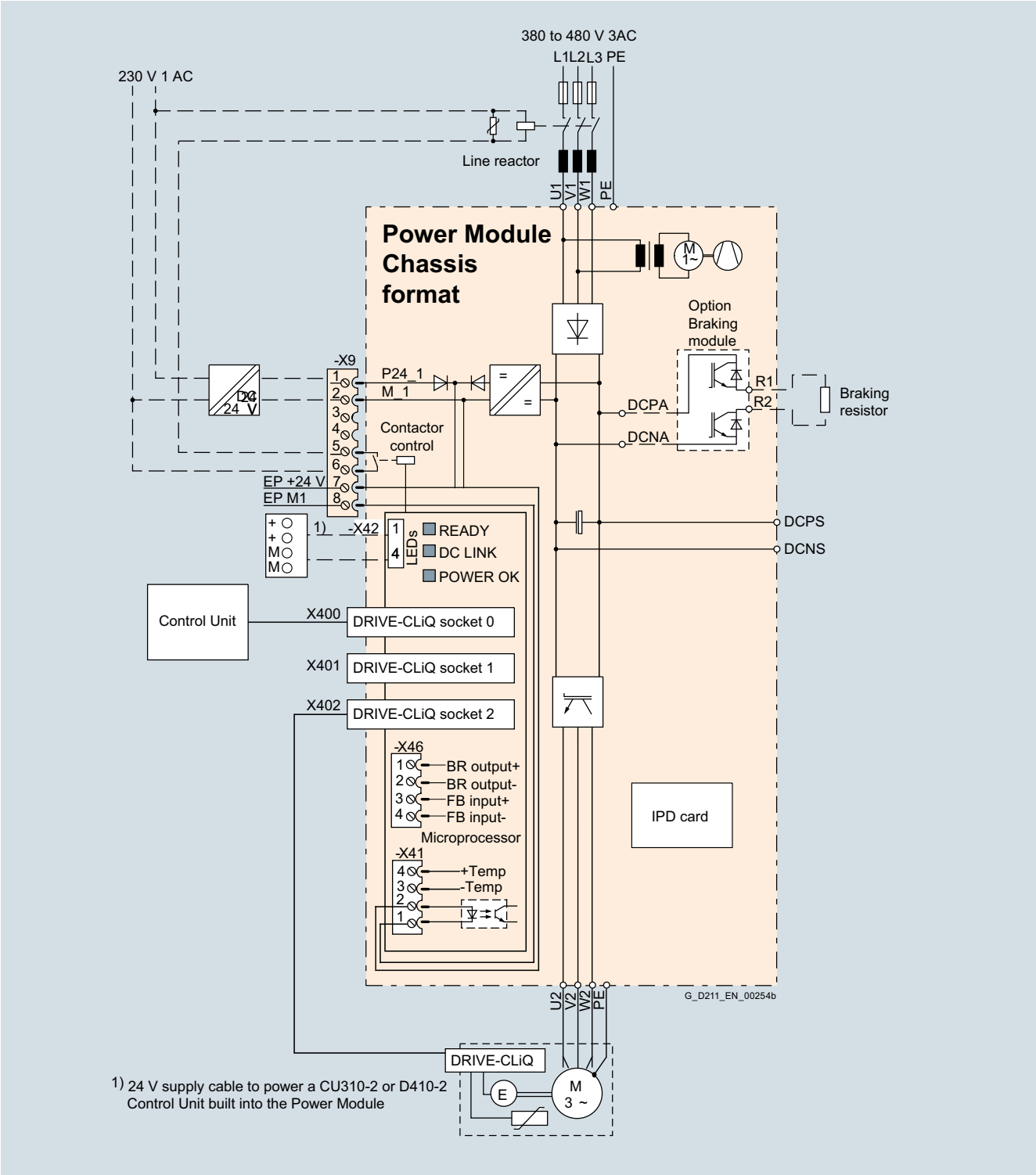

Connection example of a Power Module

Note:

The integrated 24 V power supply at connector X42 can have a maximum load of 2 A. When the Control Unit is supplied from the integrated power supply, the total load of the digital outputs must be carefully observed to ensure that the 2 A is not exceeded.

© Siemens AG 2017

Technical specifications

General technical specifications

Electrical specifications	
Line connection voltage Up to 2000 m (6562 ft) above sea level	380 ... 480 V 3 AC ±10 % (-15 % <1 min)
Line power factor for a 3 AC line supply voltage and output power	
• Basic fundamental (cos φ_1)	>0.96
• Total (λ)	0.75 ... 0.93
DC link voltage, approx. [1]	1.35 × line voltage
Output voltage, approx.	0.97 x U_{line}
Output frequency [2]	
• Control mode Servo	0 ... 550 Hz
• Control mode Vector	0 ... 550 Hz
• Control mode V/f	0 ... 550 Hz
Main contactor control	
• Terminal block -X9/5-6	240 V AC, max. 8 A 30 V DC, max. 1 A
Safety Integrated	Safety Integrity Level 2 (SIL2) acc. to IEC 61508, Performance Level d (PLd) acc. to EN ISO 13849-1 and Control Category 3 acc. to EN ISO 13849-1.

7

[1] The DC link voltage is unregulated and load-dependent.
For additional information, please refer to the SINAMICS Low Voltage Engineering Manual.

[2] Please note:
- Note the correlation between max. output frequency, pulse frequency and current derating. Higher output frequencies on request.
  For further information, see
  https://support.industry.siemens.com/cs/document/104020669
- The correlation between the minimum output frequency and permissible output current (current derating).
  Information is provided in the SINAMICS Low Voltage Engineering Manual.

© Siemens AG 2017

Technical specifications (continued)

Line voltage 380 ... 480 V 3 AC		Power Modules				
		6SL3310-1TE32-1AA3	6SL3310-1TE32-6AA3	6SL3310-1TE33-1AA3	6SL3310-1TE33-8AA3	6SL3310-1TE35-0AA3
Type rating						
• At I_L (50 Hz 400 V) [1]	kW	**110**	**132**	**160**	**200**	**250**
• At I_H (50 Hz 400 V) [1]	kW	90	110	132	160	200
• At I_L (60 Hz 460 V) [2]	hp	150	200	250	300	400
• At I_H (60 Hz 460 V) [2]	hp	150	200	200	250	350
Output current						
• Rated current $I_{rated\ O}$	A	210	260	310	380	490
• Base-load current I_L [3]	A	205	250	302	370	477
• Base-load current I_H [4]	A	178	233	277	340	438
• Maximum current $I_{max\ O}$	A	307	375	453	555	715
Input current						
• Rated input current $I_{rated\ I}$	A	229	284	338	395	509
• Maximum input current $I_{max\ I}$	A	335	410	495	606	781
Current demand						
• 24 V DC auxiliary power supply	A	0.8	0.8	0.9	0.9	0.9
Pulse frequency [5]						
• Rated frequency	kHz	2	2	2	2	2
• Pulse frequency, max.						
- Without current derating	kHz	2	2	2	2	2
- With current derating	kHz	8	8	8	8	8
Power loss, max. [6]						
• At 50 Hz 400 V	kW	2.46	3.27	4	4.54	5.78
• At 60 Hz 460 V	kW	2.54	3.36	4.07	4.67	5.96
Cooling air requirement	m^3/s (ft^3/s)	0.17 (6.0)	0.23 (8.1)	0.36 (12.7)	0.36 (12.7)	0.36 (12.7)
Sound pressure level L_{pA} (1 m) at 50/60 Hz	dB	66/67	71/71	68/72	68/72	68/72
Line connection U1, V1, W1		Flat connector for M10 screw	Flat connector for M10 screw	Flat connector for M10 screw	Flat connector for M10 screw	Flat connector for M10 screw
• Conductor cross section, max. (IEC)	mm^2	2 × 185	2 × 185	2 × 240	2 × 240	2 × 240
Motor connection U2/T1, V2/T2, W2/T3		Flat connector for M10 screw	Flat connector for M10 screw	Flat connector for M10 screw	Flat connector for M10 screw	Flat connector for M10 screw
• Conductor cross section, max. (IEC)	mm^2	2 × 185	2 × 185	2 × 240	2 × 240	2 × 240
Cable length, max. [7]						
• Shielded	m (ft)	300 (984)	300 (984)	300 (984)	300 (984)	300 (984)
• Unshielded	m (ft)	450 (1476)	450 (1476)	450 (1476)	450 (1476)	450 (1476)
PE1/GND connection		Flat connector for M10 screw	Flat connector for M10 screw	Flat connector for M10 screw	Flat connector for M10 screw	Flat connector for M10 screw
• Conductor cross section, max. (IEC)	mm^2	2 × 185	2 × 185	2 × 240	2 × 240	2 × 240
PE2/GND connection		M10 screw	M10 screw	M10 screw	M10 screw	M10 screw
• Conductor cross section, max. (IEC)	mm^2	2 × 185	2 × 185	2 × 240	2 × 240	2 × 240
Degree of protection		IP20	IP20	IP20	IP20	IP20
Dimensions						
• Width	mm (in)	326 (12.8)	326 (12.8)	326 (12.8)	326 (12.8)	326 (12.8)
• Height	mm (in)	1400 (55.1)	1400 (55.1)	1533 (60.3)	1533 (60.3)	1533 (60.3)
• Depth	mm (in)	356 (14.0) [8]	356 (14.0) [8]	549 (21.6)	549 (21.6)	549 (21.6)
Weight, approx.	kg (lb)	104 (229)	104 (229)	162 (357)	162 (357)	162 (357)
Frame size		FX	FX	GX	GX	GX
Minimum short-circuit current [9]	A	3000	3600	4400	4400	8000

1) Rated output of a typical 6-pole standard induction motor based on I_L or I_H for 400 V 3 AC 50 Hz.

2) Rated output of a typical 6-pole standard induction motor based on I_L or I_H for 460 V 3 AC 60 Hz.

3) The base-load current I_L is based on a duty cycle of 110 % for 60 s or 150 % for 10 s with a duty cycle duration of 300 s.

4) The base-load current I_H is based on a duty cycle of 150 % for 60 s or 160 % for 10 s with a duty cycle duration of 300 s.

5) Information regarding the correlation between the pulse frequency and maximum output current/output frequency is provided in the SINAMICS Low Voltage Engineering Manual.

6) The specified power loss represents the maximum value at 100 % utilization. The value is lower under normal operating conditions.

7) Longer cable lengths for specific configurations are available on request. For additional information, please refer to the SINAMICS Low Voltage Engineering Manual.

8) Depth = 421 mm (16.6 in) including front cover when CU310-2 Control Unit is installed.

9) Current required for reliably triggering protective devices.

© Siemens AG 2017

Air-cooled Active Line Modules in chassis format

Overview

The self-commutated infeed/regenerative feedback units with IGBTs generate a regulated DC link voltage. This means that the connected Motor Modules are decoupled from the line voltage. Line voltage fluctuations within the permissible supply tolerances have no effect on the motor voltage.

If required, the Active Line Modules can also provide reactive power compensation.

Active Line Modules are designed for connection to grounded TN/TT and non-grounded IT supply systems.

Active Line Modules are always operated together with the associated Active Interface Modules. These include the necessary pre-charging circuit as well as a Clean Power Filter.

Design

The Active Line Modules have the following interfaces as standard:

- 1 line supply connection
- 1 connection for the 24 V DC electronics power supply
- 1 DC link connection (DCP, DCN) for supplying the connected Motor Modules
- 1 DC link connection (DCPA, DCNA) for connecting a Braking Module
- 3 DRIVE-CLiQ sockets
- 1 temperature sensor input for KTY84-130, Pt1000, PTC or Pt100 (Pt1000 can be used from firmware V4.7 HF17)
- 2 PE connections

The status of the Active Line Modules is indicated via three LEDs.

The scope of supply of the Active Line Modules includes:

- DRIVE-CLiQ cable to connect to a Control Unit
- DRIVE-CLiQ cable to connect the Control Unit to the first Motor Module
- 1 set of warning labels in 30 languages (BG, CN, CZ, DE, DK, EE, ES, FI, FR, GB, GR, HU, IE, IS, IT, JP, KR, LT, LV, MT, NL, NO, PL, PT, RO, RU, SE, SI, SK, TR)

Selection and ordering data

Rated power at 400 V, 50 Hz (460 V, 60 Hz) or 690 V, 50 Hz (575 V, 60 Hz) kW (hp)	Rated infeed/ regenerative feedback current A	**Active Line Module** Article No.
Line voltage 380 ... 480 V 3 AC		
132 (200)	210	**6SL3330-7TE32-1AA3**
160 (250)	260	**6SL3330-7TE32-6AA3**
235 (400)	380	**6SL3330-7TE33-8AA3**
300 (500)	490	**6SL3330-7TE35-0AA3**
380 (600)	605	**6SL3330-7TE36-1AA3**
450 (600)	745	**6SL3330-7TE37-5AA3**
500 (700)	840	**6SL3330-7TE38-4AA3**
630 (900)	985	**6SL3330-7TE41-0AA3**
800 (1000)	1260	**6SL3330-7TE41-2AA3**
900 (1250)	1405	**6SL3330-7TE41-4AA3**
Line voltage 500 ... 690 V 3 AC		
630 (675)	575	**6SL3330-7TG35-8AA3**
800 (900)	735	**6SL3330-7TG37-4AA3**
1100 (1250)	1025	**6SL3330-7TG41-0AA3**
1400 (1600)	1270	**6SL3330-7TG41-3AA3**

Description	Article No.
Accessories	
Dust protection blanking plugs (50 units) For DRIVE-CLiQ port	**6SL3066-4CA00-0AA0**

© Siemens AG 2017

Integration

The Active Line Modules communicate with the higher-level control module via DRIVE-CLiQ. The control module in this case can be a CU320-2 or a SIMOTION D Control Unit. An external 24 V DC power supply is required to operate the Active Line Modules.

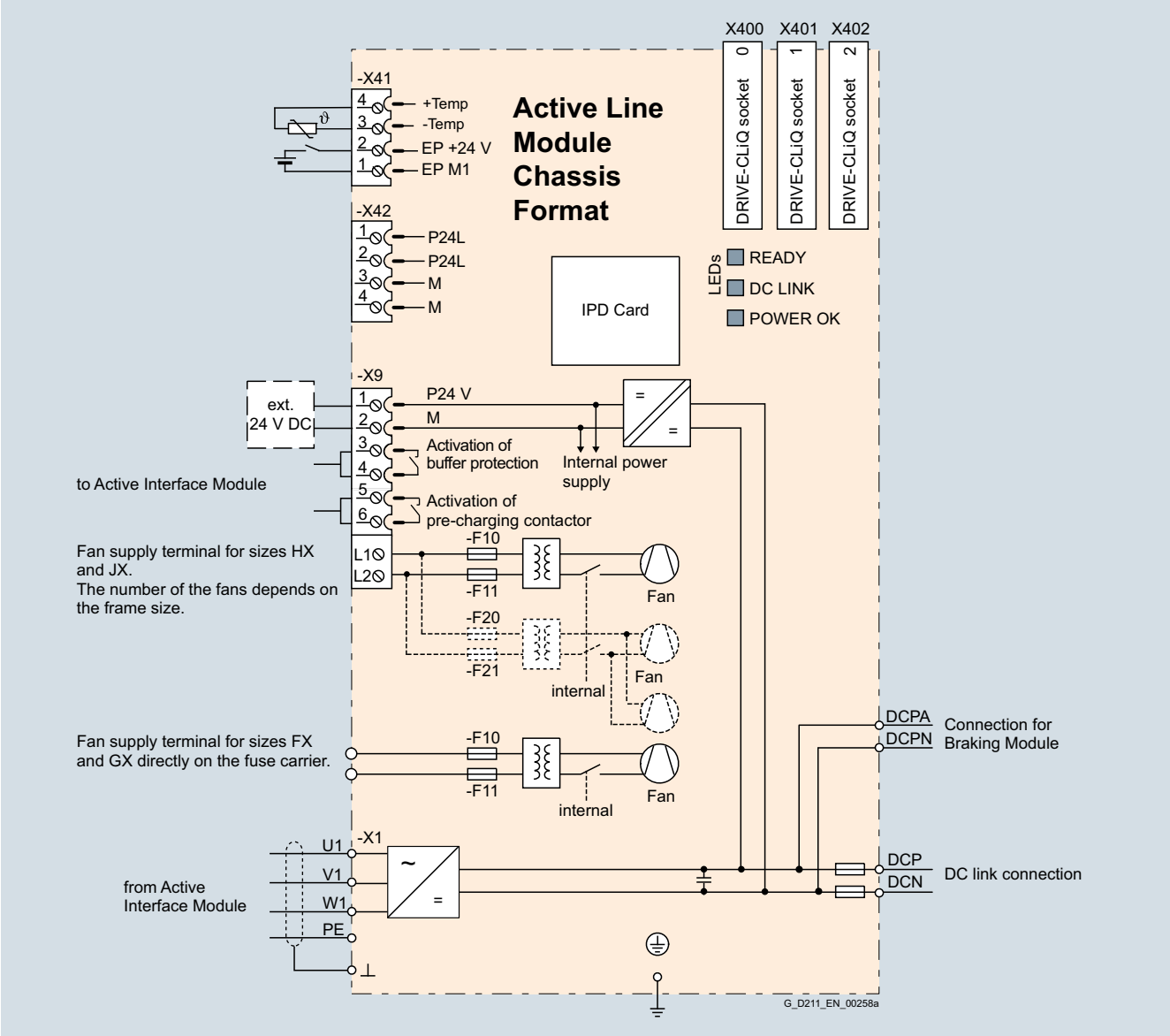

Connection example of an Active Line Module

Technical specifications

General technical specifications

Electrical specifications	
Line power factor	
• Basic fundamental (cos φ_1)	1 (factory setting), can be altered by inputting a reactive current setpoint
• Total (λ)	1 (factory setting)
Efficiency	>97.5 % (including Active Interface Module)
DC link voltage	The DC link voltage is regulated and can be adjusted as a voltage decoupled from the line voltage. Factory setting of the DC link voltage: 1.5 × line voltage
Radio interference suppression (standard)	Category C3 to EN 61800-3 (with Active Interface Module)

© Siemens AG 2017

Technical specifications (continued)

Line voltage 380 ... 480 V 3 AC		Active Line Modules				
		6SL3330-7TE32-1AA3	6SL3330-7TE32-6AA3	6SL3330-7TE33-8AA3	6SL3330-7TE35-0AA3	6SL3330-7TE36-1AA3
Rated power						
• At $I_{rated\ DC}$ (50 Hz 400 V)	kW	**132**	**160**	**235**	**300**	**380**
• At $I_{H\ DC}$ (50 Hz 400 V)	kW	115	145	210	270	335
• At $I_{rated\ DC}$ (60 Hz 460 V)	hp	200	250	400	500	600
• At $I_{H\ DC}$ (60 Hz 460 V)	hp	150	200	300	400	500
DC link current						
• Rated current $I_{rated\ DC}$	A	235	291	425	549	678
• Base-load current $I_{H\ DC}$ [1]	A	209	259	378	489	603
• Maximum current $I_{max\ DC}$	A	352	436	637	823	1017
Infeed/regenerative feedback current						
• Rated current $I_{rated\ I}$	A	210	260	380	490	605
• Maximum current $I_{max\ I}$	A	315	390	570	735	907
Current demand						
• 24 V DC auxiliary power supply	A	1.1	1.1	1.35	1.35	1.4
• 400 V AC	A	0.63	1.13	1.8	1.8	3.6
DC link capacitance						
• Active Line Module	µF	4200	5200	7800	9600	12600
• Drive line-up, max.	µF	41600	41600	76800	76800	134400
Power loss, max. [2]						
• At 50 Hz 400 V	kW	2.2	2.7	3.9	4.8	6.2
• At 60 Hz 460 V	kW	2.3	2.9	4.2	5.1	6.6
Cooling air requirement	m^3/s (ft^3/s)	0.17 (6.0)	0.23 (8.1)	0.36 (12.7)	0.36 (12.7)	0.78 (27.5)
Sound pressure level L_{pA} [3] (1 m) at 50/60 Hz	dB	64/67	71/71	69/73	69/73	70/73
Line connection U1, V1, W1		Flat connector for M10 screw	Flat connector for M10 screw	Flat connector for M10 screw	Flat connector for M10 screw	Flat connector for M12 screw
• Conductor cross section, max. (IEC)	mm^2	2 × 185	2 × 185	2 × 240	2 × 240	4 × 240
DC link connection DCP, DCN		M10 screw	M10 screw	M10 screw	M10 screw	4 × hole for M12
• Conductor cross section, max. (IEC)	mm^2	2 × 185	2 × 185	2 × 240	2 × 240	Busbar
PE1/GND connection		M10 screw	M10 screw	M10 screw	M10 screw	M12 screw
• Conductor cross section, max. (IEC)	mm^2	2 × 185	2 × 185	2 × 240	2 × 240	240
PE2/GND connection		M10 screw	M10 screw	M10 screw	M10 screw	2 × M12 screw
• Conductor cross section, max. (IEC)	mm^2	2 × 185	2 × 185	2 × 240	2 × 240	2 × 240
Cable length, max. [4]						
• Shielded	m (ft)	2700 (8859)	2700 (8859)	2700 (8859)	2700 (8859)	3900 (12796)
• Unshielded	m (ft)	4050 (13288)	4050 (13288)	4050 (13288)	4050 (13288)	5850 (19194)
Degree of protection		IP20	IP20	IP20	IP20	IP00
Dimensions						
• Width	mm (in)	326 (12.8)	326 (12.8)	326 (12.8)	326 (12.8)	503 (19.8)
• Height	mm (in)	1400 (55.1)	1400 (55.1)	1533 (60.3)	1533 (60.3)	1475 (58.1)
• Depth	mm (in)	356 (14.0)	356 (14.0)	545 (21.5)	545 (21.5)	540 (21.3)
Weight, approx.	kg (lb)	95 (209)	95 (209)	136 (300)	136 (300)	290 (639)
Frame size		FX	FX	GX	GX	HX
Minimum short-circuit current [5]	A	6200	10500	10500	8000	9200

1) The base-load current $I_{H\ DC}$ is the basis for a duty cycle of 150 % for 60 s or $I_{max\ DC}$ for 5 s with a duty cycle duration of 300 s.

2) The specified power loss represents the maximum value at 100 % utilization. The value is lower under normal operating conditions.

3) Total sound pressure level of Active Interface Module and Active Line Module.

4) Total of all motor cables and DC link. Longer cable lengths for specific configurations are available on request. For additional information, please refer to the SINAMICS Low Voltage Engineering Manual.

5) Current required for reliably triggering protective devices.

© Siemens AG 2017

Technical specifications (continued)

Line voltage 380 ... 480 V 3 AC		Active Line Modules				
		6SL3330-7TE37-5AA3	6SL3330-7TE38-4AA3	6SL3330-7TE41-0AA3	6SL3330-7TE41-2AA3	6SL3330-7TE41-4AA3
Rated power						
• At $I_{rated\ DC}$ (50 Hz 400 V)	kW	**450**	**500**	**630**	**800**	**900**
• At $I_{H\ DC}$ (50 Hz 400 V)	kW	400	465	545	690	780
• At $I_{rated\ DC}$ (60 Hz 460 V)	hp	600	700	900	1000	1250
• At $I_{H\ DC}$ (60 Hz 460 V)	hp	600	700	800	900	1000
DC link current						
• Rated current $I_{rated\ DC}$	A	835	940	1103	1412	1574
• Base-load current $I_{H\ DC}$ [1]	A	700	837	982	1255	1401
• Maximum current $I_{max\ DC}$	A	1252	1410	1654	2120	2361
Infeed/regenerative feedback current						
• Rated current $I_{rated\ I}$	A	745	840	985	1260	1405
• Maximum current $I_{max\ I}$	A	1117	1260	1477	1890	2107
Current demand						
• 24 V DC auxiliary power supply	A	1.4	1.4	1.5	1.7	1.7
• 400 V AC	A	3.6	3.6	5.4	5.4	5.4
DC link capacitance						
• Active Line Module	µF	15600	16800	18900	26100	28800
• Drive line-up, max.	µF	134400	134400	230400	230400	230400
Power loss, max. [2]						
• At 50 Hz 400 V	kW	7.3	7.7	10.1	12.1	13.3
• At 60 Hz 460 V	kW	7.7	8.2	10.8	13.0	14.2
Cooling air requirement	m^3/s (ft^3/s)	0.78 (27.5)	0.78 (27.5)	1.08 (38.1)	1.08 (38.1)	1.08 (38.1)
Sound pressure level L_{pA} [3] (1 m) at 50/60 Hz	dB	70/73	70/73	71/73	71/73	71/73
Line connection U1, V1, W1		Flat connector for M12 screw	Flat connector for M12 screw	Flat connector for M12 screw	Flat connector for M12 screw	Flat connector for M12 screw
• Conductor cross section, max. (IEC)	mm^2	4 × 240	4 × 240	6 × 240	6 × 240	6 × 240
DC link connection DCP, DCN		4 × hole for M12	4 × hole for M12	4 × hole for M12	4 × hole for M12	4 × hole for M12
• Conductor cross section, max. (IEC)	mm^2	Busbar	Busbar	Busbar	Busbar	Busbar
PE1/GND connection		M12 screw	M12 screw	M12 screw	M12 screw	M12 screw
• Conductor cross section, max. (IEC)	mm^2	240	240	240	240	240
PE2/GND connection		2 × M12 screw	2 × M12 screw	3 × M12 screw	3 × M12 screw	3 × M12 screw
• Conductor cross section, max. (IEC)	mm^2	2 × 240	2 × 240	3 × 240	3 × 240	3 × 240
Cable length, max. [4]						
• Shielded	m (ft)	3900 (12796)	3900 (12796)	3900 (12796)	3900 (12796)	3900 (12796)
• Unshielded	m (ft)	5850 (19194)	5850 (19194)	5850 (19194)	5850 (19194)	5850 (19194)
Degree of protection		IP00	IP00	IP00	IP00	IP00
Dimensions						
• Width	mm (in)	503 (19.8)	503 (19.8)	704 (27.7)	704 (27.7)	704 (27.7)
• Height	mm (in)	1475 (58.1)	1475 (58.1)	1480 (58.3)	1480 (58.3)	1480 (58.3)
• Depth	mm (in)	540 (21.3)	540 (21.3)	550 (21.6)	550 (21.6)	550 (21.6)
Weight, approx.	kg (lb)	290 (639)	290 (639)	450 (992)	450 (992)	450 (992)
Frame size		HX	HX	JX	JX	JX
Minimum short-circuit current [5]	A	8800	10400	16000	21000	21000

[1] The base-load current $I_{H\ DC}$ is the basis for a duty cycle of 150 % for 60 s or $I_{max\ DC}$ for 5 s with a duty cycle duration of 300 s.

[2] The specified power loss represents the maximum value at 100 % utilization. The value is lower under normal operating conditions.

[3] Total sound pressure level of Active Interface Module and Active Line Module.

[4] Total of all motor cables and DC link. Longer cable lengths for specific configurations are available on request. For additional information, please refer to the SINAMICS Low Voltage Engineering Manual.

[5] Current required for reliably triggering protective devices.

© Siemens AG 2017

Technical specifications (continued)

Line voltage 500 ... 690 V 3 AC		Active Line Modules			
		6SL3330-7TG35-8AA3	6SL3330-7TG37-4AA3	6SL3330-7TG41-0AA3	6SL3330-7TG41-3AA3
Rated power					
• At $I_{rated\ DC}$ (50 Hz 690 V)	kW	**630**	**800**	**1100**	**1400**
• At $I_{H\ DC}$ (50 Hz 690 V)	kW	620	705	980	1215
• At $I_{rated\ DC}$ (50 Hz 500 V)	kW	447	560	780	965
• At $I_{H\ DC}$ (50 Hz 500 V)	kW	450	510	710	880
• At $I_{rated\ DC}$ (60 Hz 575 V)	hp	675	900	1250	1500
• At $I_{H\ DC}$ (60 Hz 575 V)	hp	506	600	1000	1250
DC link current					
• Rated current $I_{rated\ DC}$	A	644	823	1148	1422
• Base-load current $I_{H\ DC}$ [1]	A	573	732	1022	1266
• Maximum current $I_{max\ DC}$	A	966	1234	1722	2133
Infeed/regenerative feedback current					
• Rated current $I_{rated\ I}$	A	575	735	1025	1270
• Maximum current $I_{max\ I}$	A	862	1102	1537	1905
Current demand					
• 24 V DC auxiliary power supply	A	1.4	1.5	1.7	1.7
• 500 V AC	A	3.0	4.4	4.4	4.4
• 690 V AC	A	2.1	3.1	3.1	3.1
DC link capacitance					
• Active Line Module	µF	7400	11100	14400	19200
• Drive line-up, max.	µF	59200	153600	153600	153600
Power loss, max. [2]					
• At 50 Hz 690 V	kW	6.8	10.2	13.6	16.5
• At 60 Hz 575 V	kW	6.2	9.6	12.9	15.3
Cooling air requirement	m^3/s (ft^3/s)	0.78 (27.5)	1.08 (38.1)	1.08 (38.1)	1.08 (38.1)
Sound pressure level L_{pA} [3] (1 m) at 50/60 Hz	dB	70/73	71/73	71/73	71/73
Line connection U1, V1, W1		Flat connector for M12 screw	Flat connector for M12 screw	Flat connector for M12 screw	Flat connector for M12 screw
• Conductor cross section, max. (IEC)	mm^2	4 × 240	6 × 240	6 × 240	6 × 240
DC link connection DCP, DCN		4 × hole for M12	4 × hole for M12	4 × hole for M12	4 × hole for M12
• Conductor cross section, max. (IEC)	mm^2	Busbar	Busbar	Busbar	Busbar
PE1/GND connection		M12 screw	M12 screw	M12 screw	M12 screw
• Conductor cross section, max. (IEC)	mm^2	240	240	240	240
PE2/GND connection		2 × M12 screw	3 × M12 screw	3 × M12 screw	3 × M12 screw
• Conductor cross section, max. (IEC)	mm^2	2 x 240	3 x 240	3 x 240	3 x 240
Cable length, max. [4]					
• Shielded	m (ft)	2250 (7382)	2250 (7382)	2250 (7382)	2250 (7382)
• Unshielded	m (ft)	3375 (11073)	3375 (11073)	3375 (11073)	3375 (11073)
Degree of protection		IP00	IP00	IP00	IP00
Dimensions					
• Width	mm (in)	503 (19.8)	704 (27.7)	704 (27.7)	704 (27.7)
• Height	mm (in)	1475 (58.1)	1480 (58.3)	1480 (58.3)	1480 (58.3)
• Depth	mm (in)	540 (21.3)	550 (21.6)	550 (21.6)	550 (21.6)
Weight, approx.	kg (lb)	290 (639)	450 (992)	450 (992)	450 (992)
Frame size		HX	JX	JX	JX
Minimum short-circuit current [5]	A	8400	10500	16000	20000

1) The base-load current $I_{H\ DC}$ is the basis for a duty cycle of 150 % for 60 s or $I_{max\ DC}$ for 5 s with a duty cycle duration of 300 s.

2) The specified power loss represents the maximum value at 100 % utilization. The value is lower under normal operating conditions.

3) Total sound pressure level of Active Interface Module and Active Line Module.

4) Total of all motor cables and DC link. Longer cable lengths for specific configurations are available on request. For additional information, please refer to the SINAMICS Low Voltage Engineering Manual.

5) Current required for reliably triggering protective devices.

© Siemens AG 2017

Overview

Active Interface Modules are used in conjunction with Active Line Modules. Active Interface Modules contain a Clean Power Filter with basic RI suppression, the pre-charging circuit for the Active Line Module, the line voltage sensing circuit and monitoring sensors. The bypass contactor is an integral component in types FI and GI. This ensures a highly compact design. The bypass contactor must be provided separately for frame sizes HI and JI.

Line harmonics are largely suppressed by the Clean Power Filter.

Design

Active Interface Modules have the following interfaces as standard:

- 1 line supply connection
- 1 load connection
- 1 connection for the 24 V DC electronics power supply
- 1 connection for the external 230 V AC supply (fan power supply)
- 1 DRIVE-CLiQ socket (on VSM10 Voltage Sensing Module)
- 1 connection for pre-charging circuit, frame sizes HI and JI
- 1 PE connection

The scope of supply of the Active Interface Modules includes:

- DRIVE-CLiQ cable for the connection between Active Interface Module and Active Line Module
- 1 set of warning labels in 30 languages (BG, CN, CZ, DE, DK, EE, ES, FI, FR, GB, GR, HU, IE, IS, IT, JP, KR, LT, LV, MT, NL, NO, PL, PT, RO, RU, SE, SI, SK, TR)

Selection and ordering data

Suitable for Active Line Module chassis format, air-cooled	Rated power of the Active Line Modules at 400 V, 50 Hz (460 V, 60 Hz) or 690 V, 50 Hz (575 V, 60 Hz) kW (hp)	**Active Interface Module** **Article No.**
Line voltage 380 ... 480 V 3 AC		
6SL3330-7TE32-1AA3	132 (200)	**6SL3300-7TE32-6AA0**
6SL3330-7TE32-6AA3	160 (250)	**6SL3300-7TE32-6AA0**
6SL3330-7TE33-8AA3	235 (400)	**6SL3300-7TE33-8AA0**
6SL3330-7TE35-0AA3	300 (500)	**6SL3300-7TE35-0AA0**
6SL3330-7TE36-1AA3	380 (600)	**6SL3300-7TE38-4AA0**
6SL3330-7TE37-5AA3	450 (600)	**6SL3300-7TE38-4AA0**
6SL3330-7TE38-4AA3	500 (700)	**6SL3300-7TE38-4AA0**
6SL3330-7TE41-0AA3	630 (900)	**6SL3300-7TE41-4AA0**
6SL3330-7TE41-2AA3	800 (1000)	**6SL3300-7TE41-4AA0**
6SL3330-7TE41-4AA3	900 (1250)	**6SL3300-7TE41-4AA0**
Line voltage 500 ... 690 V 3 AC		
6SL3330-7TG35-8AA3	630 (675)	**6SL3300-7TG35-8AA0**
6SL3330-7TG37-4AA3	800 (900)	**6SL3300-7TG37-4AA0**
6SL3330-7TG41-0AA3	1100 (1250)	**6SL3300-7TG41-3AA0**
6SL3330-7TG41-3AA3	1400 (1600)	**6SL3300-7TG41-3AA0**

© Siemens AG 2017

Integration

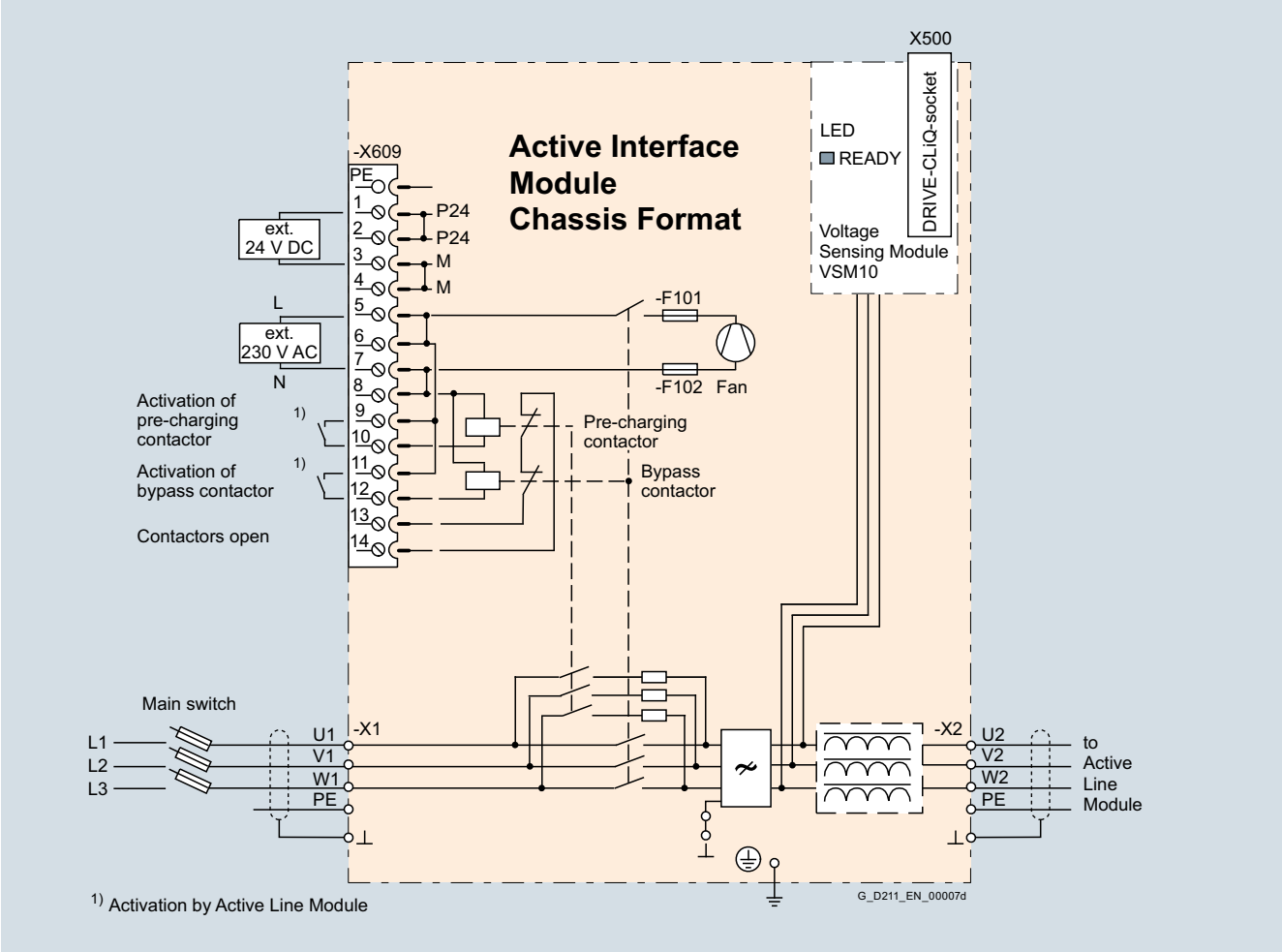

Connection example of an Active Interface Module with integrated bypass contactor (frame sizes FI and GI)

© Siemens AG 2017

Integration (continued)

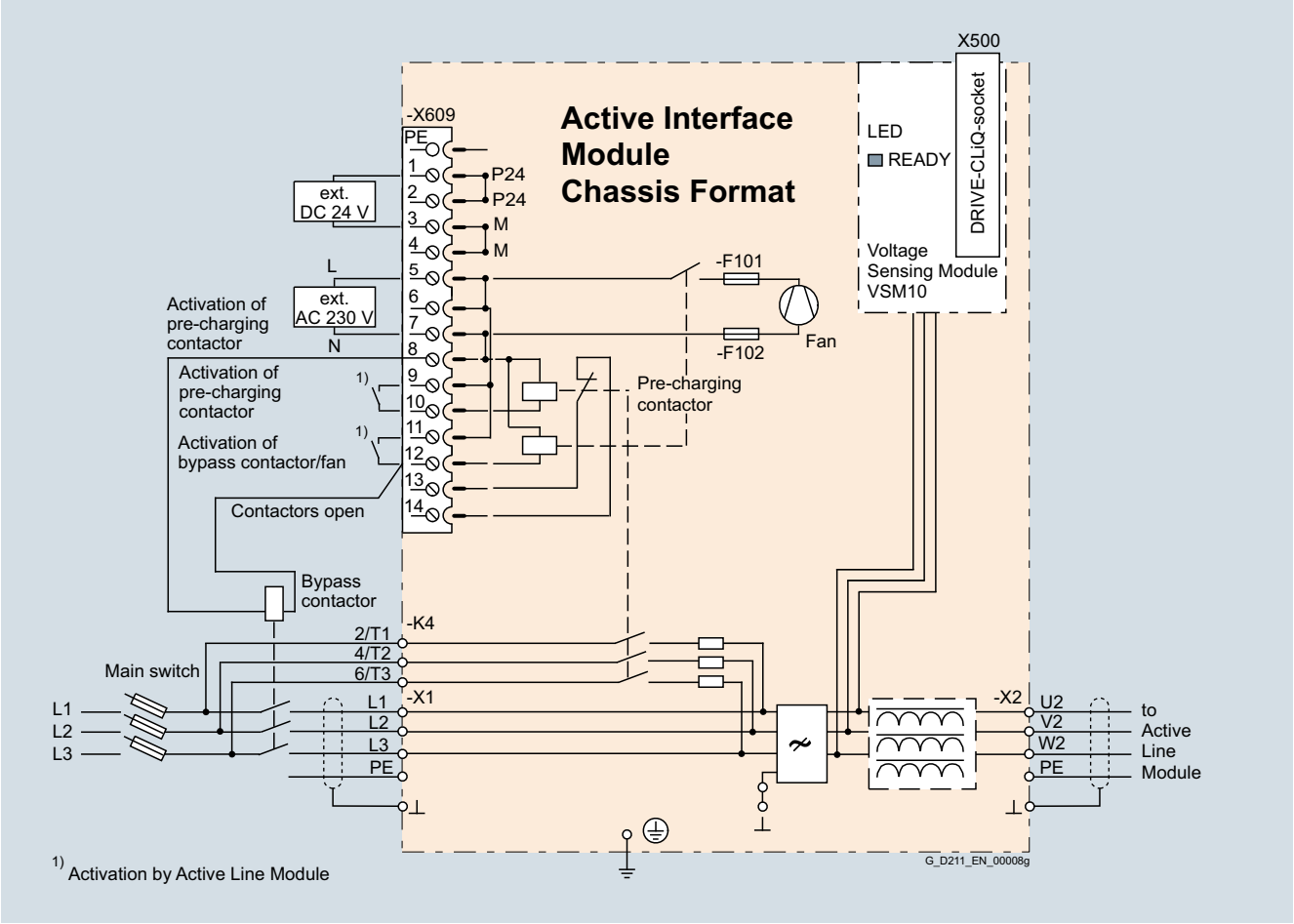

Connection example of an Active Interface Module with externally mounted bypass contactor (frame sizes HI and JI)

© Siemens AG 2017

Technical specifications

Line voltage 380 ... 480 V 3 AC		**Active Interface Modules**			
		6SL3300-7TE32-6AA0		6SL3300-7TE33-8AA0	6SL3300-7TE35-0AA0
Suitable for Active Line Module					
• Rated power at 400 V	kW	**132**	**160**	**235**	**300**
- Air-cooled		6SL3330-7TE32-1AA3	6SL3330-7TE32-6AA3	6SL3330-7TE33-8AA3	6SL3330-7TE35-0AA3
- Liquid-cooled		–	–	–	6SL3335-7TE35-0AA3
Rated current	A	210	260	380	490
Bypass contactor		Included	Included	Included	Included
Current demand					
• 24 V DC auxiliary power supply	A	0.17	0.17	0.17	0.17
• 230 V 2 AC					
- Inrush current	A	1.25	1.25	2.5	2.5
- Holding current	A	0.6	0.6	1.2	1.2
DC link capacitance of drive line-up, max. [1]	µF	41600	41600	76800	76800
Power loss, max. [2]					
• At 50 Hz 400 V	kW	2.1	2.2	3.0	3.9
• At 60 Hz 460 V	kW	2.1	2.2	3.0	3.9
Cooling air requirement	m^3/s (ft^3/s)	0.24 (8.5)	0.24 (8.5)	0.47 (16.6)	0.47 (16.6)
Line/load connection L1, L2, L3 / U2, V2, W2		Flat connector for M10 screw	Flat connector for M10 screw	Flat connector for M10 screw	Flat connector for M10 screw
• Conductor cross section, max. (IEC)	mm^2	2 × 185	2 × 185	2 × 185	2 × 185
PE/GND connection		2 × M10 nut	2 × M10 nut	2 × M10 nut	2 × M10 nut
• Conductor cross section, max. (IEC)	mm^2	2 × 185	2 × 185	2 × 185	2 × 185
Degree of protection		IP20	IP20	IP20	IP20
Dimensions					
• Width	mm (in)	325 (12.8)	325 (12.8)	325 (12.8)	325 (12.8)
• Height	mm (in)	1400 (55.1)	1400 (55.1)	1533 (60.3)	1533 (60.3)
• Depth	mm (in)	355 (14.0)	355 (14.0)	544 (21.4)	544 (21.4)
Weight, approx.	kg (lb)	135 (298)	135 (298)	190 (419)	190 (419)
Frame size		FI	FI	GI	GI
Minimum short-circuit current [3]	A	6200	10500	10500	8000

[1] Information on higher capacities is included in the SINAMICS Low Voltage Engineering Manual.

[2] The specified power loss represents the maximum value at 100 % utilization. The value is lower under normal operating conditions.

[3] Current required for reliable triggering of the protective devices.

© Siemens AG 2017

Technical specifications (continued)

Line voltage 380 ... 480 V 3 AC		**Active Interface Modules**			
		6SL3300-7TE38-4AA0		6SL3300-7TE41-4AA0	
Suitable for Active Line Module					
• Rated power at 400 V	kW	**380**	**450/500**	**630**	**800/900**
- Air-cooled		6SL3330-7TE36-1AA3	6SL3330-7TE37-5AA3 6SL3330-7TE38-4AA3	6SL3330-7TE41-0AA3	6SL3330-7TE41-2AA3 6SL3330-7TE41-4AA3
- Liquid-cooled		6SL3335-7TE36-1AA3	6SL3335-7TE38-4AA3	–	–
Rated current	A	605	745/840	985	1260/1405
Bypass contactor		3RT1476-6AP36	3WL1110-2BB34-4AN2-Z Z = C22 [1]	3WL1112-2BB34-4AN2-Z Z = C22 [1]	3WL1116-2BB34-4AN2-Z Z = C22 [1]
Current demand					
• 24 V DC auxiliary power supply	A	0.17	0.17	0.17	0.17
• 230 V 2 AC					
- Inrush current	A	9.9	9.9	10.5	10.5
- Holding current	A	4.6	4.6	4.9	4.9
DC link capacitance of the drive line-up, max. [2]	µF	134400	134400	230400	230400
Power loss, max. [3]					
• At 50 Hz 400 V	kW	5.5	6.1	7.5	8.5
• At 60 Hz 460 V	kW	5.5	6.1	7.5	8.5
Cooling air requirement	m^3/s (ft^3/s)	0.4 (14.1)	0.4 (14.1)	0.4 (14.1)	0.4 (14.1)
Line/load connection L1, L2, L3 / U2, V2, W2		4 × hole for M12	4 × hole for M12	3 × hole for M12	3 × hole for M12
• Conductor cross section, max. (IEC)	mm^2	4 × 240	4 × 240	6 × 240	6 × 240
PE/GND connection		2 × M12 nut	2 × M12 nut	4 × M12 nut	4 × M12 nut
• Conductor cross section, max. (IEC)	mm^2	2 × 240	2 × 240	4 × 240	4 × 240
Degree of protection		IP00	IP00	IP00	IP00
Dimensions					
• Width	mm (in)	305 (12.0)	305 (12.0)	505 (19.9)	505 (19.9)
• Height	mm (in)	1750 (68.9)	1750 (68.9)	1750 (68.9)	1750 (68.9)
• Depth	mm (in)	544 (21.4)	544 (21.4)	544 (21.4)	544 (21.4)
Weight, approx.	kg (lb)	390 (960)	390 (960)	480 (1058)	480 (1058)
Frame size		HI	HI	JI	JI
Minimum short-circuit current [4]	A	9200	8800/10400	16000	21000

[1] The breakers must always be switched ON and OFF by the sequence control. An interlocking set 3WL9111-0BA21-0AA0 as described in Catalog LV 10 should be provided for the bypass contactor to exclude the risk of unintentional manual operation. Manual operation bypasses the pre-charging circuit and can therefore destroy the Active Line Module.

[2] Information on higher capacities is included in the SINAMICS Low Voltage Engineering Manual.

[3] The specified power loss represents the maximum value at 100 % utilization. The value is lower under normal operating conditions.

[4] Current required for reliably triggering protective devices.

© Siemens AG 2017

Technical specifications (continued)

Line voltage 500 ... 690 V 3 AC		**Active Interface Modules**			
		6SL3300-7TG35-8AA0	6SL3300-7TG37-4AA0	6SL3300-7TG41-3AA0	
Suitable for Active Line Module					
• Rated power at 690 V	kW	**630**	**800**	**1100**	**1400**
- Air-cooled		6SL3330-7TG35-8AA3	6SL3330-7TG37-4AA3	6SL3330-7TG41-0AA3	6SL3330-7TG41-3AA3
- Liquid-cooled		6SL3335-7TG35-8AA3	–	–	–
Rated current	A	575	735	1025	1270
Bypass contactor		3RT1476-6AP36	3RT1476-6AP36 (3 units)	3WL1212-4BB34-4AN2-Z C22 [1]	3WL1216-4BB34-4AN2-Z C22 [1]
Current demand					
• 24 V DC auxiliary power supply	A	0.17	0.17	0.17	0.17
• 230 V 2 AC					
- Inrush current	A	9.9	10.5	10.5	10.5
- Holding current	A	4.6	4.9	4.9	4.9
DC link capacitance of the drive line-up, max. [2]	µF	59200	153600	153600	153600
Power loss, max. [3]					
• At 50 Hz 690 V	kW	6.8	9.0	9.2	9.6
• At 60 Hz 575 V	kW	6.8	9.0	9.2	9.6
Cooling air requirement	m^3/s (ft^3/s)	0.4 (14.1)	0.4 (14.1)	0.4 (14.1)	0.4 (14.1)
Line/load connection L1, L2, L3 / U2, V2, W2		4 × hole for M12	3 × hole for M12	3 × hole for M12	3 × hole for M12
• Conductor cross section, max. (IEC)	mm^2	4 × 240	6 × 240	6 × 240	6 × 240
PE/GND connection		2 × M12 nut	4 × M12 nut	4 × M12 nut	4 × M12 nut
• Conductor cross section, max. (IEC)	mm^2	2 × 240	4 × 240	4 × 240	4 × 240
Degree of protection		IP00	IP00	IP00	IP00
Dimensions					
• Width	mm (in)	305 (12.0)	505 (19.9)	505 (19.9)	505 (19.9)
• Height	mm (in)	1750 (68.9)	1750 (68.9)	1750 (68.9)	1750 (68.9)
• Depth	mm (in)	544 (21.4)	544 (21.4)	544 (21.4)	544 (21.4)
Weight, approx.	kg (lb)	390 (960)	430 (948)	530 (1169)	530 (1169)
Frame size		HI	JI	JI	JI
Minimum short-circuit current [4]	A	8400	10500	16000	20000

[1] The breakers must always be switched ON and OFF by the sequence control. An interlocking set 3WL9111-0BA21-0AA0 as described in Catalog LV 10 should be provided for the bypass contactor to exclude the risk of unintentional manual operation. Manual operation bypasses the pre-charging circuit and can therefore destroy the Active Line Module.

[2] Information on higher capacities is included in the SINAMICS Low Voltage Engineering Manual.

[3] The specified power loss represents the maximum value at 100 % utilization. The value is lower under normal operating conditions.

[4] Current required for reliably triggering protective devices.

© Siemens AG 2017

Overview

Smart Line Modules are infeed/regenerative feedback units that supply power to connected Motor Modules. Furthermore, they are capable of feeding regenerative energy back into the grid. The infeed occurs over a diode jumper, while stable, line-commutated regenerative feedback takes place via IGBTs with 100 % continuous energy regeneration. The regenerative capability of the modules can be deactivated by means of parameterization.

Smart Line Modules are designed for connection to grounded TN/TT and non-grounded IT supply systems.

The DC link is pre-charged by means of integrated pre-charging resistors.

To operate the Smart Line Module, the associated line reactor or a suitable transformer is required.

Design

The Smart Line Modules have the following interfaces as standard:

- 1 line supply connection
- 1 connection for the 24 V DC electronics power supply
- 1 DC link connection (DCP, DCN) for supplying the connected Motor Modules
- 1 DC link connection (DCPA, DCNA) for connecting a Braking Module
- 3 DRIVE-CLiQ sockets
- 1 temperature sensor input for KTY84-130, Pt1000, PTC or Pt100 (Pt1000 can be used from firmware V4.7 HF17)
- 1 PE/protective conductor connection (2 connections for sizes HX and JX)

The status of the Smart Line Modules is indicated via three LEDs.

The scope of supply of the Smart Line Modules includes:

- DRIVE-CLiQ cable to connect to a Control Unit
- DRIVE-CLiQ cable for connection between the Control Unit and first Motor Module (type dependent)
- 1 set of warning labels in 30 languages (BG, CN, CZ, DE, DK, EE, ES, FI, FR, GB, GR, HU, IE, IS, IT, JP, KR, LT, LV, MT, NL, NO, PL, PT, RO, RU, SE, SI, SK, TR)

Selection and ordering data

Rated power at 400 V, 50 Hz (460 V, 60 Hz) or 690 V, 50 Hz (575 V, 60 Hz) kW (hp)	Infeed/regenerative feedback current A	**Smart Line Module** Article No.
Line voltage 380 ... 480 V 3 AC		
250 (385)	463	**6SL3330-6TE35-5AA3**
355 (545)	614	**6SL3330-6TE37-3AA3**
500 (770)	883	**6SL3330-6TE41-1AA3**
630 (970)	1093	**6SL3330-6TE41-3AA3**
800 (1230)	1430	**6SL3330-6TE41-7AA3**
Line voltage 500 ... 690 V 3 AC		
450 (500)	463	**6SL3330-6TG35-5AA3**
710 (790)	757	**6SL3330-6TG38-8AA3**
1000 (1115)	1009	**6SL3330-6TG41-2AA3**
1400 (1465)	1430	**6SL3330-6TG41-7AA3**

Description	Article No.
Accessories	
Dust protection blanking plugs (50 units) For DRIVE-CLiQ port	**6SL3066-4CA00-0AA0**

7

© Siemens AG 2017

Integration

The Smart Line Modules communicate with the higher-level control module via DRIVE-CLiQ. The control module in this case can be a CU320-2 or a SIMOTION D Control Unit. An external 24 V DC power supply is required to operate the Smart Line Modules.

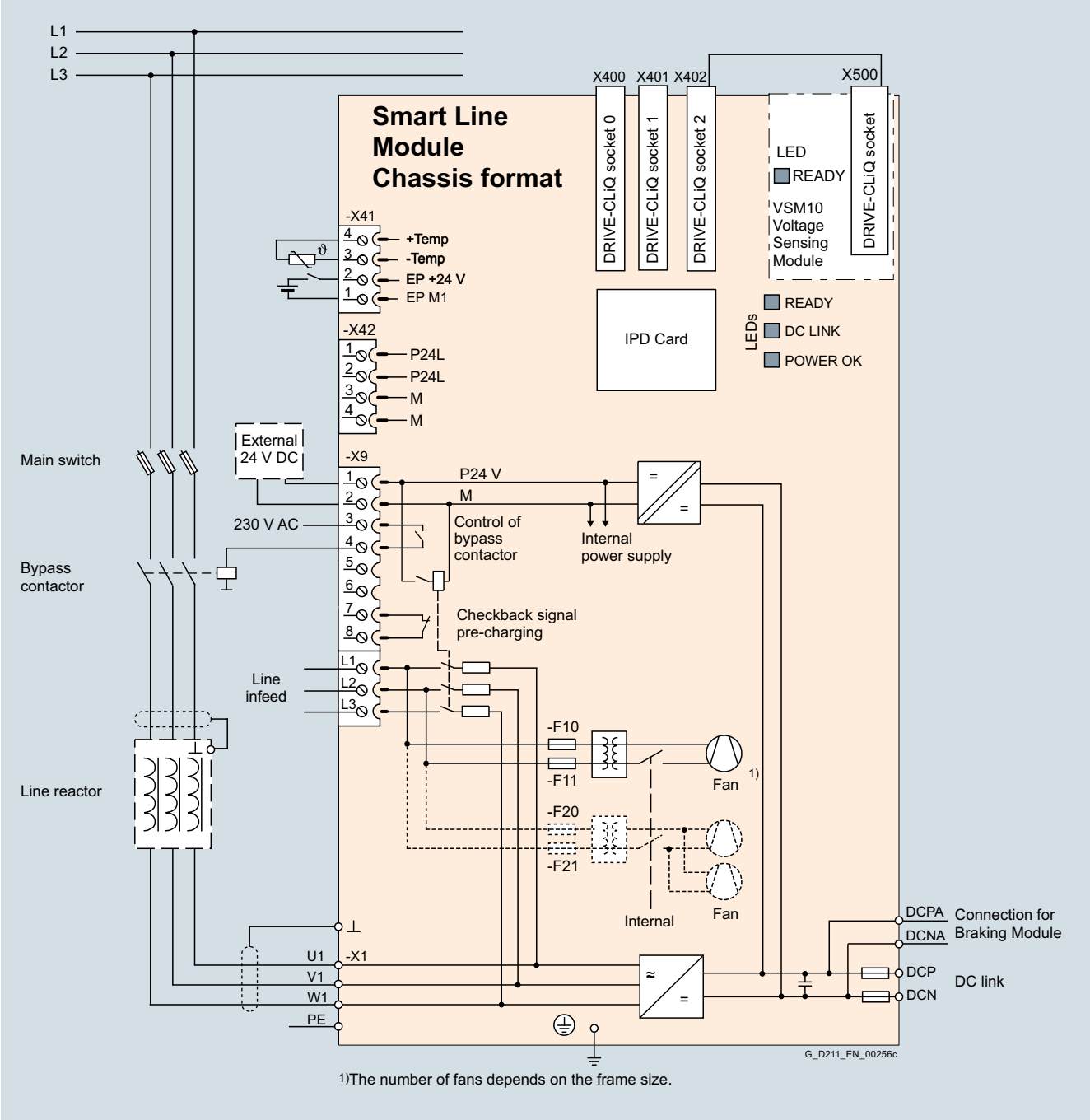

Connection example of a Smart Line Module

© Siemens AG 2017

Technical specifications

General technical specifications

Electrical specifications	
Line power factor at rated power	
• Basic fundamental (cos φ_1)	>0.96
• Total (λ)	0.75 ... 0.93
Efficiency	>98.5 %
DC link voltage, approx. [1]	1.32 × line voltage under partial load 1.30 × line voltage under full load
Main contactor control	
• Terminal block -X9/5-6	240 V AC, max. 8 A 30 V DC, max. 1 A

[1] The DC link voltage is unregulated and load-dependent.
For additional information, please refer to the SINAMICS Low Voltage Engineering Manual.

© Siemens AG 2017

Technical specifications (continued)

Line voltage 380 ... 480 V 3 AC		Smart Line Modules				
		6SL3330-6TE35-5AA3	6SL3330-6TE37-3AA3	6SL3330-6TE41-1AA3	6SL3330-6TE41-3AA3	6SL3330-6TE41-7AA3
Rated power						
• At $I_{rated\ DC}$ (50 Hz 400 V)	kW	**250**	**355**	**500**	**630**	**800**
• At $I_{H\ DC}$ (50 Hz 400 V)	kW	235	315	450	555	730
• At $I_{rated\ DC}$ (60 Hz 460 V)	hp	385	545	770	970	1230
• At $I_{H\ DC}$ (60 Hz 460 V)	hp	360	485	695	855	1125
DC link current						
• Rated current $I_{rated\ DC}$	A	550	730	1050	1300	1700
• Base-load current $I_{H\ DC}$ [1]	A	490	650	934	1157	1513
• Maximum current $I_{max\ DC}$	A	825	1095	1575	1950	2550
Infeed/regenerative feedback current						
• Rated current $I_{rated\ I}$	A	463	614	883	1093	1430
• Maximum current $I_{max\ I}$	A	694	921	1324	1639	2145
Current demand						
• 24 V DC auxiliary power supply	A	1.35	1.35	1.4	1.5	1.7
• 400 V AC	A	1.8	1.8	3.6	5.4	5.4
DC link capacitance						
• Smart Line Module	µF	8400	12000	16800	18900	28800
• Drive line-up, max.	µF	42000	60000	67200	75600	115200
Power loss, max. [2]						
• At 50 Hz 400 V	kW	3.7	4.7	7.1	11.0	11.5
• At 60 Hz 460 V	kW	3.7	4.7	7.1	11.0	11.5
Cooling air requirement	m^3/s (ft^3/s)	0.36 (12.7)	0.36 (12.7)	0.78 (27.5)	1.08 (38.1)	1.08 (38.1)
Sound pressure level L_{pA} (1 m) at 50/60 Hz	dB	69/73	69/73	70/73	70/73	70/73
Line connection U1, V1, W1		Flat connector for M10 screw	Flat connector for M10 screw	Flat connector for M12 screw	Flat connector for M12 screw	Flat connector for M12 screw
• Conductor cross section, max. (IEC)	mm^2	2 × 240	2 × 240	4 × 240	6 × 240	6 × 240
DC link connection DCP, DCN		M10 screw	M10 screw	4 × hole for M12	4 × hole for M12	4 × hole for M12
• Conductor cross section, max. (IEC)	mm^2	2 × 240	2 × 240	Busbar	Busbar	Busbar
PE/GND connection		Hole for M10	Hole for M10	–	–	–
• Conductor cross section, max. (IEC)	mm^2	2 × 240	2 × 240	–	–	–
PE1/GND connection		–	–	M12 screw	M12 screw	M12 screw
• Conductor cross section, max. (IEC)	mm^2	–	–	240	240	240
PE2/GND connection		–	–	2 × M12 screw	2 × M12 screw	2 × M12 screw
• Conductor cross section, max. (IEC)	mm^2	–	–	2 × 240	2 × 240	2 × 240
Cable length, max. [3]						
• Shielded	m (ft)	4000 (13124)	4000 (13124)	4800 (15749)	4800 (15749)	4800 (15749)
• Unshielded	m (ft)	6000 (19686)	6000 (19686)	7200 (23623)	7200 (23623)	7200 (23623)
Degree of protection		IP00	IP00	IP00	IP00	IP00
Dimensions						
• Width	mm (in)	310 (12.2)	310 (12.2)	503 (19.8)	704 (27.7)	704 (27.7)
• Height	mm (in)	1413 (55.6)	1413 (55.6)	1475 (58.1)	1480 (58.3)	1480 (58.3)
• Depth	mm (in)	550 (21.6)	550 (21.6)	548 (21.6)	550 (21.6)	550 (21.6)
Weight, approx.	kg (lb)	150 (331)	150 (331)	294 (648)	458 (1010)	458 (1010)
Frame size		GX	GX	HX	JX	JX
Minimum short-circuit current [4]	A	6200	9200	10400	16000	21000

[1] The base-load current $I_{H\ DC}$ is the basis for a duty cycle of 150 % for 60 s or $I_{max\ DC}$ for 5 s with a duty cycle duration of 300 s.

[2] The specified power loss represents the maximum value at 100 % utilization. The value is lower under normal operating conditions.

[3] Total of all motor cables and DC link. Longer cable lengths for specific configurations are available on request. For additional information, please refer to the SINAMICS Low Voltage Engineering Manual.

[4] Current required for reliably triggering protective devices.

© Siemens AG 2017

Technical specifications (continued)

Line voltage 500 ... 690 V 3 AC		Smart Line Modules			
		6SL3330-6TG35-5AA3	6SL3330-6TG38-8AA3	6SL3330-6TG41-2AA3	6SL3330-6TG41-7AA3
Rated power					
• At $I_{rated\ DC}$ (50 Hz 690 V)	kW	**450**	**710**	**1000**	**1400**
• At $I_{H\ DC}$ (50 Hz 690 V)	kW	405	665	885	1255
• At $I_{rated\ DC}$ (50 Hz 500 V)	kW	320	525	705	995
• At $I_{H\ DC}$ (50 Hz 500 V)	kW	295	480	640	910
• At $I_{rated\ DC}$ (60 Hz 575 V)	hp	500	790	1115	1465
• At $I_{H\ DC}$ (60 Hz 575 V)	hp	450	740	990	1400
DC link current					
• Rated current $I_{rated\ DC}$	A	550	900	1200	1700
• Base-load current $I_{H\ DC}$ [1]	A	490	800	1068	1513
• Maximum current $I_{max\ DC}$	A	825	1350	1800	2550
Infeed/regenerative feedback current					
• Rated current $I_{rated\ I}$	A	463	757	1009	1430
• Maximum current $I_{max\ I}$	A	694	1135	1513	2145
Current demand					
• 24 V DC auxiliary power supply	A	1.35	1.4	1.5	1.7
• 500 V AC	A	1.3	2.9	4.3	4.3
• 690 V AC	A	0.94	2.1	3.1	3.1
DC link capacitance					
• Smart Line Module	µF	5600	7400	11100	14400
• Drive line-up, max.	µF	28000	29600	44400	57600
Power loss, max. [2]					
• At 50 Hz 690 V	kW	4.3	6.5	12.0	13.8
• At 60 Hz 575 V	kW	4.3	6.5	12.0	13.8
Cooling air requirement	m^3/s (ft^3/s)	0.36 (12.7)	0.78 (27.5)	1.08 (38.1)	1.08 (38.1)
Sound pressure level L_{pA} (1 m) at 50/60 Hz	dB	69/73	70/73	70/73	70/73
Line connection U1, V1, W1		Flat connector for M10 screw	Flat connector for M12 screw	Flat connector for M12 screw	Flat connector for M12 screw
• Conductor cross section, max. (IEC)	mm^2	2 × 240	4 × 240	6 × 240	6 × 240
DC link connection DCP, DCN		M10 screw	4 × hole for M12	4 × hole for M12	4 × hole for M12
• Conductor cross section, max. (IEC)	mm^2	2 × 240	Busbar	Busbar	Busbar
PE connection		Hole for M10	–	–	–
• Conductor cross section, max. (IEC)	mm^2	2 × 240	–	–	–
PE1/GND connection		–	M12 screw	M12 screw	M12 screw
• Conductor cross section, max. (IEC)	mm^2	–	240	240	240
PE2/GND connection		–	2 × M12 screw	2 × M12 screw	2 × M12 screw
• Conductor cross section, max. (IEC)	mm^2	–	2 × 240	2 × 240	2 × 240
Cable length, max. [3]					
• Shielded	m (ft)	2250 (7382)	2750 (9023)	2750 (9023)	2750 (9023)
• Unshielded	m (ft)	3375 (11073)	4125 (13534)	4125 (13534)	4125 (13534)
Degree of protection		IP00	IP00	IP00	IP00
Dimensions					
• Width	mm (in)	310 (12.2)	503 (19.8)	704 (27.7)	704 (27.7)
• Height	mm (in)	1413 (55.6)	1475 (58.1)	1480 (58.3)	1480 (58.3)
• Depth	mm (in)	550 (21.6)	548 (21.6)	550 (21.6)	550 (21.6)
Weight, approx.	kg (lb)	150 (331)	294 (648)	458 (1010)	458 (1010)
Frame size		GX	HX	JX	JX
Minimum short-circuit current [4]	A	6200	10500	12400	21000

[1] The base-load current $I_{H\ DC}$ is the basis for a duty cycle of 150 % for 60 s or $I_{max\ DC}$ for 5 s with a duty cycle duration of 300 s.

[2] The specified power loss represents the maximum value at 100 % utilization. The value is lower under normal operating conditions.

[3] Total of all motor cables and DC link. Longer cable lengths for specific configurations are available on request. For additional information, please refer to the SINAMICS Low Voltage Engineering Manual.

[4] Current required for reliably triggering protective devices.

© Siemens AG 2017

Air-cooled Basic Line Modules in chassis format

Overview

Basic Line Modules are available for applications in which no energy is returned to the supply or where the energy exchange between motor and generator axes takes place in the DC link. Basic Line Modules are designed for connection to grounded TN/TT and non-grounded IT supply systems.

The Basic Line Modules are available in different frame sizes. With frame sizes FB and GB, a fully controlled thyristor bridge is used to pre-charge the Basic Line Modules and connected Motor Modules. The thyristors normally operate with a trigger delay angle of 0°.

Basic Line Modules, frame size GD for 900 kW (400 V) or 1500 kW (690 V) include a diode bridge, and the DC link is pre-charged via a separate line-side pre-charging circuit.

A Braking Module of the appropriate frame size can be integrated into a Basic Line Module in order to permit, in conjunction with an external braking resistor, regenerative operation of the drive system.

Design

The Basic Line Modules have the following interfaces as standard:

- 1 line supply connection
- 1 connection for the 24 V DC electronics power supply
- 1 DC link connection (DCP, DCN) for supplying the connected Motor Modules
- 1 DC link connection (DCPA, DCNA) for connecting a Braking Module
- 3 DRIVE-CLiQ sockets
- 1 temperature sensor input for KTY84-130, Pt1000 or PTC (Pt1000 can be used from firmware V4.7 HF17)
- 1 PE connection

The status of the Basic Line Modules is indicated via three LEDs.

The scope of supply of the Basic Line Modules includes:

- DRIVE-CLiQ cable to connect to a Control Unit
- DRIVE-CLiQ cable to connect the Control Unit to the first Motor Module
- 1 set of warning labels in 30 languages (BG, CN, CZ, DE, DK, EE, ES, FI, FR, GB, GR, HU, IE, IS, IT, JP, KR, LT, LV, MT, NL, NO, PL, PT, RO, RU, SE, SI, SK, TR)

Pre-charging circuit for the Basic Line Modules, frame size GD

Unlike Basic Line Modules in frame sizes FB and GB, a Basic Line Module in frame size GD requires a separate precharging circuit. The pre-charging circuit components must be ordered separately.

During startup, the pre-charging circuit ensures that the DC link capacitors of the Basic Line Module and the connected Motor Modules are pre-charged with current limiting. After pre-charging has been completed, the circuit breaker is closed and the pre-charging circuit bypassed; the Basic Line Module is then directly connected to the line supply.

The pre-charging circuit comprises a pre-charging contactor and pre-charging resistors; the circuit must be protected against overcurrent using suitable protection measures. To increase the permissible DC link capacitance, the pre-charging resistors can also be connected in parallel in each phase.

More information on the pre-charging circuit is to be found in the SINAMICS Low Voltage Engineering Manual.

Selection and ordering data

Rated power at 400 V, 50 Hz (460 V, 60 Hz) or 690 V, 50 Hz (575 V, 60 Hz) kW (hp)	Rated DC link current A	**Basic Line Module** Article No.
Line voltage 380 ... 480 V 3 AC		
200 (305)	420	**6SL3330-1TE34-2AA3**
250 (385)	530	**6SL3330-1TE35-3AA3**
400 (615)	820	**6SL3330-1TE38-2AA3**
560 (860)	1200	**6SL3330-1TE41-2AA3**
710 (1090)	1500	**6SL3330-1TE41-5AA3**
900 (1390)	1880	**6SL3330-1TE41-8AA3**
Line voltage 500 ... 690 V 3 AC		
250 (250)	300	**6SL3330-1TG33-0AA3**
355 (350)	430	**6SL3330-1TG34-3AA3**
560 (600)	680	**6SL3330-1TG36-8AA3**
900 (900)	1100	**6SL3330-1TG41-1AA3**
1100 (1250)	1400	**6SL3330-1TG41-4AA3**
1500 (1500)	1880	**6SL3330-1TG41-8AA3**

Description	Article No.
Accessories	
Dust protection blanking plugs (50 units) For DRIVE-CLiQ port	**6SL3066-4CA00-0AA0**

© Siemens AG 2017

Integration

The Basic Line Modules communicate with the higher-level control module via DRIVE-CLiQ. The control module in this case can be a CU320-2 or a SIMOTION D Control Unit. An external 24 V DC power supply is required to operate Basic Line Modules.

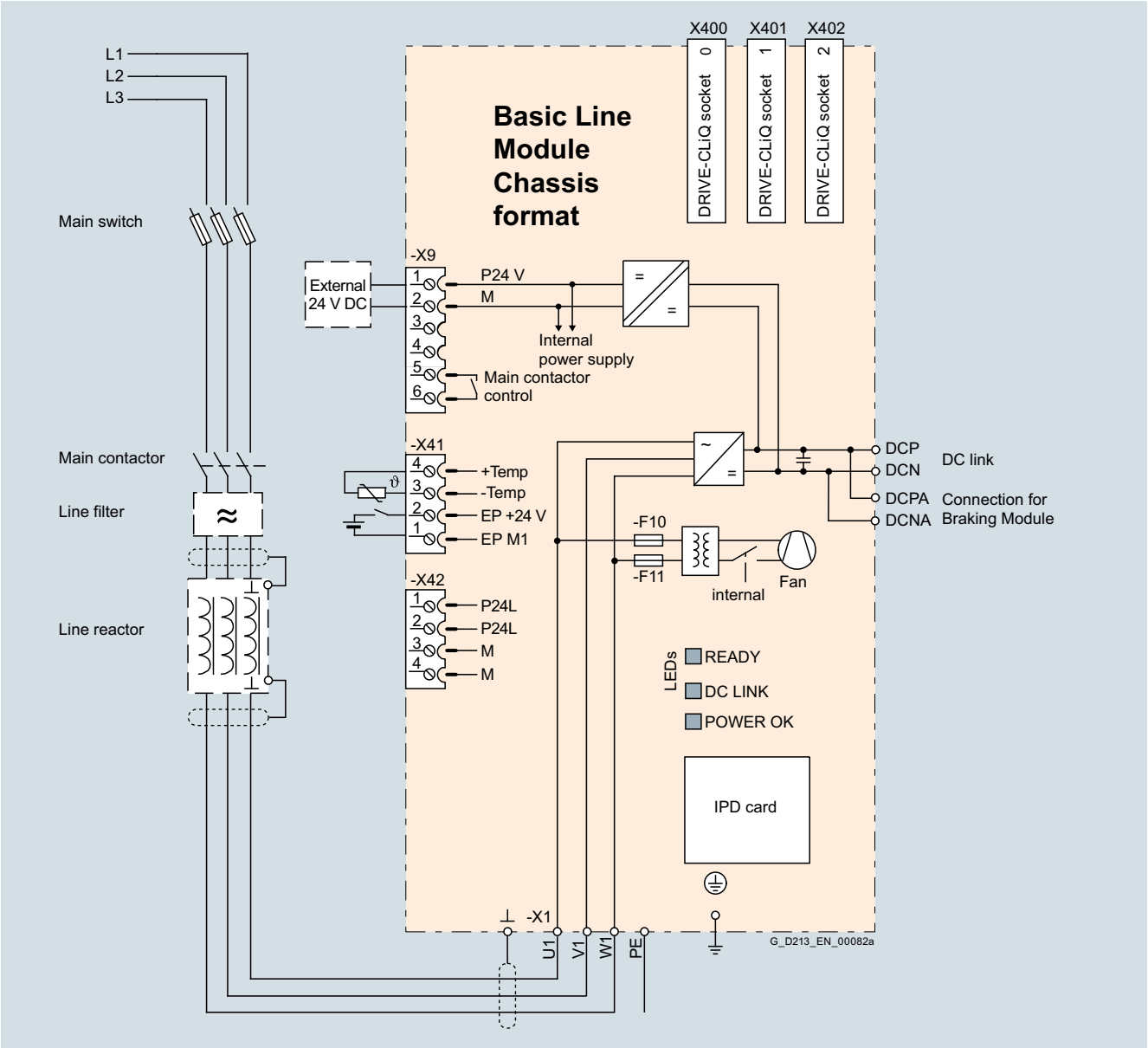

Connection example of a Basic Line Module, frame sizes FB, GB

© Siemens AG 2017

Integration (continued)

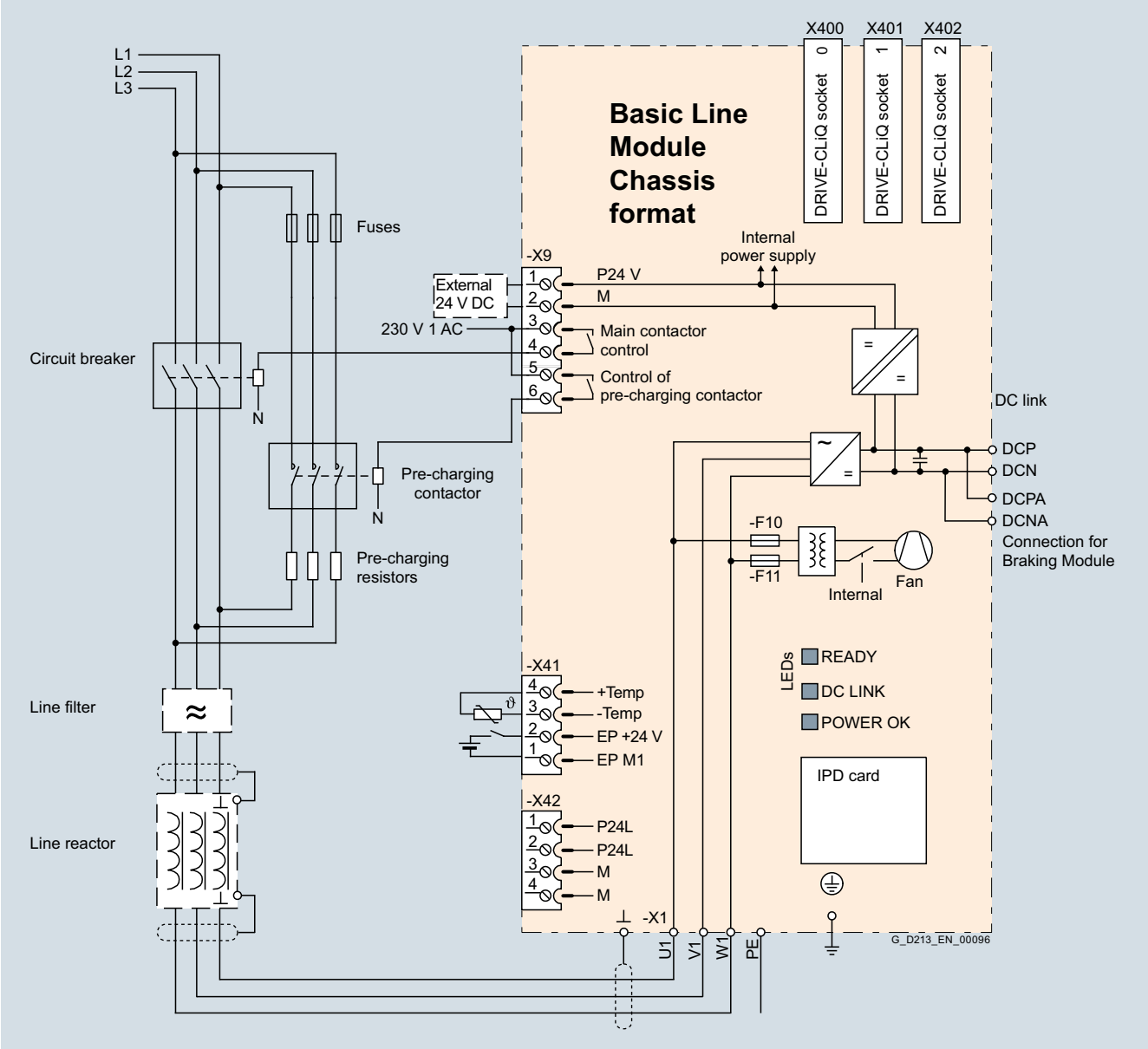

Connection example of a Basic Line Module, frame size GD

Technical specifications

General technical specifications

Electrical specifications	
Line power factor at rated power	
• Basic fundamental (cos φ_1)	>0.96
• Total (λ)	0.75 ... 0.93
Efficiency	>99 %
DC link voltage, approx. [1]	1.35 × line voltage under partial load 1.32 × line voltage under full load
Main contactor control	
• Terminal block -X9/5-6	240 V AC, max. 8 A 30 V DC, max. 1 A

[1] The DC link voltage is unregulated and load-dependent.
For additional information, please refer to the SINAMICS Low Voltage Engineering Manual.

© Siemens AG 2017

Technical specifications (continued)

Line voltage 380 ... 480 V 3 AC		Basic Line Modules					
		6SL3330-1TE34-2AA3	6SL3330-1TE35-3AA3	6SL3330-1TE38-2AA3	6SL3330-1TE41-2AA3	6SL3330-1TE41-5AA3	6SL3330-1TE41-8AA3
Rated power							
• At $I_{rated\ DC}$ (50 Hz 400 V)	kW	**200**	**250**	**400**	**560**	**710**	**900**
• At $I_{H\ DC}$ (50 Hz 400 V)	kW	160	200	315	450	560	705
• At $I_{rated\ DC}$ (60 Hz 460 V)	hp	305	385	615	860	1090	1390
• At $I_{H\ DC}$ (60 Hz 460 V)	hp	245	305	485	690	860	1090
DC link current							
• Rated current $I_{rated\ DC}$	A	420	530	820	1200	1500	1880
• Base-load current $I_{H\ DC}$ [1]	A	328	413	640	936	1170	1467
• Maximum current $I_{max\ DC}$	A	630	795	1230	1800	2250	2820
Input current							
• Rated current $I_{rated\ I}$	A	365	460	710	1010	1265	1630
• Maximum current $I_{max\ I}$	A	547	690	1065	1515	1897	2380
• Max. pre-charging current (max. 3 s)	A	Internal	Internal	Internal	Internal	Internal	308
Current demand							
• 24 V DC auxiliary power supply	A	1.1	1.1	1.1	1.1	1.1	1.1
DC link capacitance							
• Basic Line Module	µF	7200	9600	14600	23200	29000	34800
• Drive line-up, max.	µF	57600	76800	116800	185600	232000	139200/278400 [2]
Power loss, max. [3]							
• At 50 Hz 400 V	kW	1.9	2.1	3.2	4.6	5.5	6.9
• At 60 Hz 460 V	kW	1.9	2.1	3.2	4.6	5.5	6.9
Cooling air requirement	m^3/s (ft^3/s)	0.17 (6.00)	0.17 (6.00)	0.17 (6.00)	0.36 (12.7)	0.36 (12.7)	0.36 (12.7)
Sound pressure level L_{pA} (1 m) at 50/60 Hz	dB	66/68	66/68	66/68	71/73	71/73	71/73
Line connection U1, V1, W1		Flat connector for M10 screw	Flat connector for M10 screw	Flat connector for M10 screw	Flat connector for M12 screw	Flat connector for M12 screw	Flat connector for M12 screw
• Conductor cross section, max. (IEC)	mm^2	2 × 240	2 × 240	2 × 240	6 × 185	6 × 185	6 × 185
DC link connection DCP, DCN		M10 screw	M10 screw	M10 screw	3 × hole for M12	3 × hole for M12	3 × hole for M12
• Conductor cross section, max. (IEC)	mm^2	2 × 240	2 × 240	2 × 240	6 × 185	6 × 185	6 × 185
PE/GND connection		2 × hole for M10	2 × hole for M10	2 × hole for M10	2 × hole for M12	2 × hole for M12	2 × hole for M12
• Conductor cross section, max. (IEC)	mm^2	2 × 240	2 × 240	2 × 240	4 × 240	4 × 240	4 × 240
Cable length, max. [4]							
• Shielded	m (ft)	2600 (8531)	2600 (8531)	2600 (8531)	4000 (13124)	4000 (13124)	4800 (15749)
• Unshielded	m (ft)	3900 (12796)	3900 (12796)	3900 (12796)	6000 (19686)	6000 (19686)	7200 (23623)
Degree of protection		IP00	IP00	IP00	IP00	IP00	IP00
Dimensions							
• Width	mm (in)	310 (12.2)	310 (12.2)	310 (12.2)	310 (12.2)	310 (12.2)	310 (12.2)
• Height	mm (in)	1164 (45.8)	1164 (45.8)	1164 (45.8)	1653 (65.1)	1653 (65.1)	1653 (65.1)
• Depth	mm (in)	352 (13.9)	352 (13.9)	352 (13.9)	550 (21.6)	550 (21.6)	550 (21.6)
Weight, approx.	kg (lb)	96 (212)	96 (212)	96 (212)	214 (472)	214 (472)	214 (472)
Frame size		FB	FB	FB	GB	GB	GD
Minimum short-circuit current [5]	A	4400	5200	10000	12400	18400	18600

[1] The base-load current $I_{H\ DC}$ is the basis for a duty cycle of 150 % for 60 s or $I_{max\ DC}$ for 5 s with a duty cycle duration of 300 s.

[2] The first value applies for one precharging resistor for each phase, the second value for two precharging resistors connected in parallel for each phase.

[3] The specified power loss represents the maximum value at 100 % utilization. The value is lower under normal operating conditions.

[4] Total of all motor cables and DC link. Longer cable lengths for specific configurations are available on request. For additional information, please refer to the SINAMICS Low Voltage Engineering Manual.

[5] Current required for reliably triggering protective devices.

© Siemens AG 2017

Technical specifications (continued)

Line voltage 500 ... 690 V 3 AC		Basic Line Modules					
		6SL3330-1TG33-0AA3	6SL3330-1TG34-3AA3	6SL3330-1TG36-8AA3	6SL3330-1TG41-1AA3	6SL3330-1TG41-4AA3	6SL3330-1TG41-8AA3
Rated power							
• At $I_{rated\ DC}$ (50 Hz 690 V)	kW	**250**	**355**	**560**	**900**	**1100**	**1500**
• At $I_{H\ DC}$ (50 Hz 690 V)	kW	195	280	440	710	910	1220
• At $I_{rated\ DC}$ (50 Hz 500 V)	kW	175	250	390	635	810	1085
• At $I_{H\ DC}$ (50 Hz 500 V)	kW	165	235	365	595	755	1015
• At $I_{rated\ DC}$ (60 Hz 575 V)	hp	250	350	600	900	1250	1500
• At $I_{H\ DC}$ (60 Hz 575 V)	hp	200	300	450	800	1000	1250
DC link current							
• Rated current $I_{rated\ DC}$	A	300	430	680	1100	1400	1880
• Base-load current $I_{H\ DC}$ [1]	A	234	335	530	858	1092	1467
• Maximum current $I_{max\ DC}$	A	450	645	1020	1650	2100	2820
Input current							
• Rated current $I_{rated\ I}$	A	260	375	575	925	1180	1580
• Maximum current $I_{max\ I}$	A	390	563	863	1388	1770	2370
• Max. pre-charging current (max. 3 s)	A	Internal	Internal	Internal	Internal	Internal	234
Current demand							
• 24 V DC auxiliary power supply	A	1.1	1.1	1.1	1.1	1.1	1.1
DC link capacitance							
• Basic Line Module	µF	3200	4800	7300	11600	15470	19500
• Drive line-up, max.	µF	25600	38400	58400	92800	123760	78000/156000 [2]
Power loss, max. [3]							
• At 50 Hz 690 V	kW	1.5	2.1	3.0	5.4	5.8	7.3
• At 60 Hz 575 V	kW	1.5	2.1	3.0	5.4	5.8	7.3
Cooling air requirement	m^3/s (ft^3/s)	0.17 (6.00)	0.17 (6.00)	0.17 (6.00)	0.36 (12.7)	0.36 (12.7)	0.36 (12.7)
Sound pressure level L_{pA} (1 m) at 50/60 Hz	dB	66/68	66/68	66/68	71/73	71/73	71/73
Line connection U1, V1, W1		Flat connector for M10 screw	Flat connector for M10 screw	Flat connector for M10 screw	Flat connector for M12 screw	Flat connector for M12 screw	Flat connector for M12 screw
• Conductor cross section, max. (IEC)	mm^2	2 × 240	2 × 240	2 × 240	6 × 185	6 × 185	6 × 185
DC link connection DCP, DCN		M10 screw	M10 screw	M10 screw	3 × hole for M12	3 × hole for M12	3 × hole for M12
• Conductor cross section, max. (IEC)	mm^2	2 × 240	2 × 240	2 × 240	6 ×185	6 × 185	6 × 185
PE/GND connection		2 × hole for M10	2 × hole for M10	2 × hole for M10	2 × hole for M12	2 × hole for M12	2 × hole for M12
• Conductor cross section, max. (IEC)	mm^2	2 × 240	2 × 240	2 × 240	4 × 240	4 × 240	4 × 240
Cable length, max. [4]							
• Shielded	m (ft)	1500 (4921)	1500 (4921)	1500 (4921)	2250 (7382)	2250 (7382)	2750 (9023)
• Unshielded	m (ft)	2250 (7382)	2250 (7382)	2250 (7382)	3375 (11073)	3375 (11073)	4125 (13534)
Degree of protection		IP00	IP00	IP00	IP00	IP00	IP00
Dimensions							
• Width	mm (in)	310 (12.2)	310 (12.2)	310 (12.2)	310 (12.2)	310 (12.2)	310 (12.2)
• Height	mm (in)	1164 (45.8)	1164 (45.8)	1164 (45.8)	1653 (65.1)	1653 (65.1)	1653 (65.1)
• Depth	mm (in)	352 (13.9)	352 (13.9)	352 (13.9)	550 (21.6)	550 (21.6)	550 (21.6)
Weight, approx.	kg (lb)	96 (212)	96 (212)	96 (212)	214 (472)	214 (472)	214 (472)
Frame size		FB	FB	FB	GB	GB	GD
Minimum short-circuit current [5]	A	3000	4400	8000	10400	16000	18600

1) The base-load current $I_{H\ DC}$ is the basis for a duty cycle of 150 % for 60 s or $I_{max\ DC}$ for 5 s with a duty cycle duration of 300 s.

2) The first value applies for one pre-charging resistor for each phase, the second value for two precharging resistors connected in parallel for each phase.

3) The specified power loss represents the maximum value at 100 % utilization. The value is lower under normal operating conditions.

4) Total of all motor cables and DC link. Longer cable lengths for specific configurations are available on request. For additional information, please refer to the SINAMICS Low Voltage Engineering Manual.

5) Current required for reliably triggering protective devices.

© Siemens AG 2017

Overview

A Motor Module comprises a self-commutated inverter with IGBTs. It generates a variable voltage with variable frequency from the DC link voltage that feeds the connected motor.

Multiple Motor Modules can be operated on a single DC link. This permits energy to be transferred between the Motor Modules. This means that if one Motor Module operating in generator mode produces energy, the energy can be used by another Motor Module operating in motor mode.

Motor Modules are controlled by a Control Unit.

Design

The Motor Modules in the chassis format have the following interfaces as standard:

- 1 motor connection
- 1 connection for the 24 V DC electronics power supply
- 1 DC link connection (DCP, DCN) for connecting to the supply DC link
- 1 DC link connection (DCPA, DCNA) for connecting a Braking Module
- 1 DC link connection (DCPS, DCNS) for connecting a dv/dt filter
- 3 DRIVE-CLiQ sockets
- 1 temperature sensor input for KTY84-130, Pt1000, PTC or Pt100 (Pt1000 can be used from firmware V4.7 HF17)
- 1 connection for Safe Brake Adapter
- 1 connection for Safety Integrated
- 2 PE connections

The status of the Motor Modules is indicated via three LEDs.

The scope of supply of the Motor Modules includes:

- DRIVE-CLiQ cable for connection to the Control Unit
- DRIVE-CLiQ cable for connection to the next Motor Module
- 1 set of warning labels in 30 languages (BG, CN, CZ, DE, DK, EE, ES, FI, FR, GB, GR, HU, IE, IS, IT, JP, KR, LT, LV, MT, NL, NO, PL, PT, RO, RU, SE, SI, SK, TR)

Selection and ordering data

Type rating at 400 V, 50 Hz (460 V, 60 Hz) or 690 V, 50 Hz (575 V, 60 Hz) kW (hp)	Rated output current A	**Motor Module** Article No.
Line voltage 380 ... 480 V 3 AC (DC link voltage 510 ... 720 V DC)		
110 (150)	210	**6SL3320-1TE32-1AA3**
132 (200)	260	**6SL3320-1TE32-6AA3**
160 (250)	310	**6SL3320-1TE33-1AA3**
200 (300)	380	**6SL3320-1TE33-8AA3**
250 (400)	490	**6SL3320-1TE35-0AA3**
315 (500)	605	**6SL3320-1TE36-1AA3**
400 (600)	745	**6SL3320-1TE37-5AA3**
450 (700)	840	**6SL3320-1TE38-4AA3**
560 (800)	985	**6SL3320-1TE41-0AA3**
710 (1000)	1260	**6SL3320-1TE41-2AA3**
800 (1150)	1405	**6SL3320-1TE41-4AA3**
Line voltage 500 ... 690 V 3 AC (DC link voltage 675 ... 1035 V DC)		
75 (75)	85	**6SL3320-1TG28-5AA3**
90 (75)	100	**6SL3320-1TG31-0AA3**
110 (100)	120	**6SL3320-1TG31-2AA3**
132 (150)	150	**6SL3320-1TG31-5AA3**
160 (150)	175	**6SL3320-1TG31-8AA3**
200 (200)	215	**6SL3320-1TG32-2AA3**
250 (250)	260	**6SL3320-1TG32-6AA3**
315 (300)	330	**6SL3320-1TG33-3AA3**
400 (400)	410	**6SL3320-1TG34-1AA3**
450 (450)	465	**6SL3320-1TG34-7AA3**
560 (600)	575	**6SL3320-1TG35-8AA3**
710 (700)	735	**6SL3320-1TG37-4AA3**
800 (800)	810	**6SL3320-1TG38-1AA3**
900 (900)	910	**6SL3320-1TG38-8AA3**
1000 (1000)	1025	**6SL3320-1TG41-0AA3**
1200 (1250)	1270	**6SL3320-1TG41-3AA3**

Description	Article No.
Accessories	
Dust protection blanking plugs (50 units) For DRIVE-CLiQ port	**6SL3066-4CA00-0AA0**

© Siemens AG 2017

Integration

The Motor Modules communicate with the higher-level control module via DRIVE-CLiQ. The control module in this case can be a CU320-2 or a SIMOTION D Control Unit.

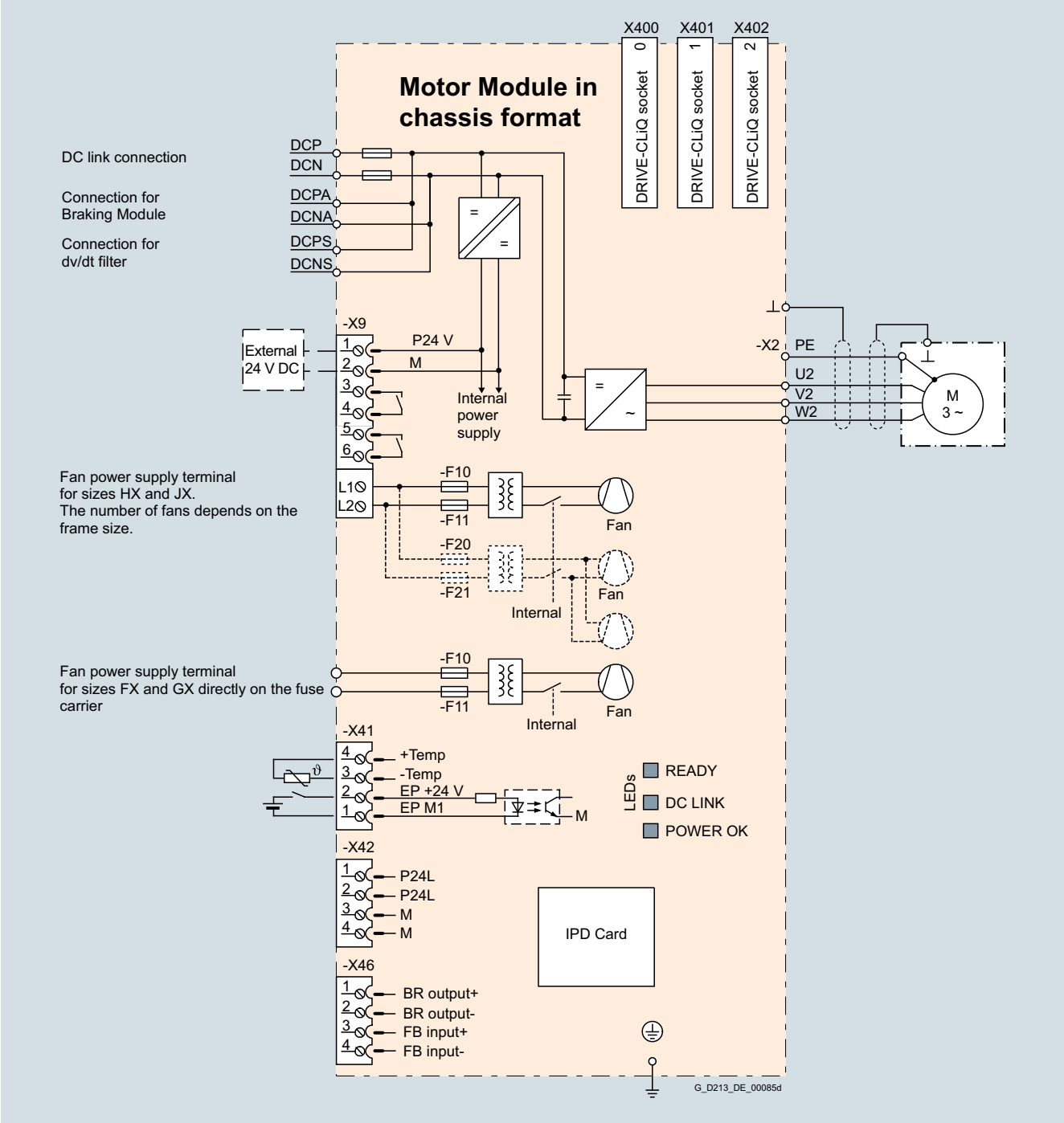

Connection example of a Motor Module

© Siemens AG 2017

Technical specifications

General technical specifications

Electrical specifications	
Efficiency	>98.5 %
DC link voltage (up to 2000 m (6562 ft) above sea level)	510 ... 720 V DC (line supply voltage 380 ... 480 V 3 AC) or 675 ... 1035 V DC (line supply voltage 500 ... 690 V 3 AC)
Output frequency [1]	
• Control mode Servo	0 ... 550 Hz
• Control mode Vector	0 ... 550 Hz
• Control mode V/f	0 ... 550 Hz
Safety Integrated	Safety Integrity Level 2 (SIL2) acc. to IEC 61508, Performance Level d (PLd) acc. to EN ISO 13849-1 and Control Category 3 acc. to EN ISO 13849-1

[1] Please note:
- The correlation between the maximum output frequency, pulse frequency and current derating. Higher output frequencies on request For further information, see https://support.industry.siemens.com/cs/document/104020669
- The correlation between the minimum output frequency and permissible output current (current derating).
  Information is provided in the SINAMICS Low Voltage Engineering Manual.

© Siemens AG 2017

Technical specifications (continued)

Line voltage 380 ... 480 V 3 AC DC link voltage 510 ... 720 V DC		Motor Modules				
		6SL3320-1TE32-1AA3	6SL3320-1TE32-6AA3	6SL3320-1TE33-1AA3	6SL3320-1TE33-8AA3	6SL3320-1TE35-0AA3
Type rating						
• At I_L (50 Hz 400 V) 1)	kW	**110**	**132**	**160**	**200**	**250**
• At I_H (50 Hz 400 V) 1)	kW	90	110	132	160	200
• At I_L (60 Hz 460 V) 2)	hp	150	200	250	300	400
• At I_H (60 Hz 460 V) 2)	hp	150	200	200	250	350
Output current						
• Rated current $I_{rated\ O}$	A	210	260	310	380	490
• Base-load current I_L 3)	A	205	250	302	370	477
• Base-load current I_H 4)	A	178	233	277	340	438
• Maximum current $I_{max\ A}$	A	307	375	453	555	715
DC link current						
• Rated current $I_{rated\ DC}$ when supplied via						
- Basic/Smart Line Module	A	252	312	372	456	588
- Active Line Module	A	227	281	335	411	529
• Base-load current $I_{L\ DC}$ 3) when supplied via						
- Basic/Smart Line Module	A	245	304	362	444	573
- Active Line Module	A	221	273	326	400	515
• Base-load current $I_{H\ DC}$ 4) when supplied via						
- Basic/Smart Line Module	A	224	277	331	405	523
- Active Line Module	A	202	250	298	365	470
Current demand						
• 24 V DC auxiliary power supply	A	0.8	0.8	0.9	0.9	0.9
• 400 V AC	A	0.63	1.13	1.8	1.8	1.8
DC link capacitance	µF	4200	5200	6300	7800	9600
Pulse frequency 5)						
• Rated frequency	kHz	2	2	2	2	2
• Pulse frequency, max.						
- Without current derating	kHz	2	2	2	2	2
- With current derating	kHz	8	8	8	8	8
Power loss, max. 6)						
• At 50 Hz 400 V	kW	1.86	2.5	2.96	3.67	4.28
• At 60 Hz 460 V	kW	1.94	2.6	3.1	3.8	4.5
Cooling air requirement	m^3/s (ft^3/s)	0.17 (6.00)	0.23 (8.12)	0.36 (12.7)	0.36 (12.7)	0.36 (12.7)
Sound pressure level L_{pA} (1 m) at 50/60 Hz	dB	64/67	71/71	69/73	69/73	69/73
DC link connection DCP, DCN		M10 screw	M10 screw	M10 screw	M10 screw	M10 screw
• Conductor cross section, max. (IEC)	mm^2	2 × 185	2 × 185	2 × 240	2 × 240	2 × 240
Connection for Braking Module DCPA, DCNA 7)		M6 threaded bolt	M6 threaded bolt	M6 threaded bolt	M6 threaded bolt	M6 threaded bolt
Connection for dv/dt filter DCPS, DCNS		M8 screw	M8 screw	M8 screw	M8 screw	M8 screw
• Conductor cross section, max. (IEC)	mm^2	1 × 35	1 × 35	1 × 70	1 × 70	1 × 70
Motor connection U2, V2, W2		M10 screw	M10 screw	M10 screw	M10 screw	M10 screw
• Conductor cross section, max. (IEC)	mm^2	2 × 185	2 × 185	2 × 240	2 × 240	2 × 240
Cable length, max. 8)						
• Shielded	m (ft)	300 (984)	300 (984)	300 (984)	300 (984)	300 (984)
• Unshielded	m (ft)	450 (1476)	450 (1476)	450 (1476)	450 (1476)	450 (1476)

Footnotes see next page.

© Siemens AG 2017

Technical specifications (continued)

Line voltage 380 ... 480 V 3 AC DC link voltage 510 ... 720 V DC		Motor Modules				
		6SL3320-1TE32-1AA3	6SL3320-1TE32-6AA3	6SL3320-1TE33-1AA3	6SL3320-1TE33-8AA3	6SL3320-1TE35-0AA3
PE1/GND connection		M10 screw	M10 screw	M10 screw	M10 screw	M10 screw
• Conductor cross section, max. (IEC)	mm^2	2 × 185	2 × 185	2 × 240	2 × 240	2 × 240
PE2/GND connection		M10 screw	M10 screw	M10 screw	M10 screw	M10 screw
• Conductor cross section, max. (IEC)	mm^2	2 × 185	2 × 185	2 × 240	2 × 240	2 × 240
Degree of protection		IP20	IP20	IP20	IP20	IP20
Dimensions						
• Width	mm (in)	326 (1070)	326 (1070)	326 (1070)	326 (1070)	326 (1070)
• Height	mm (in)	1400 (4593)	1400 (4593)	1533 (5030)	1533 (5030)	1533 (5030)
• Depth	mm (in)	356 (1168)	356 (1168)	545 (1788)	545 (1788)	545 (1788)
Weight, approx.	kg (lb)	95 (209)	95 (209)	136 (300)	136 (300)	136 (300)
Frame size		FX	FX	GX	GX	GX

1) Rated output of a typical 6-pole standard induction motor based on I_L or I_H for 400 V 3 AC 50 Hz.

2) Rated output of a typical 6-pole standard induction motor based on I_L or I_H for 460 V 3 AC 60 Hz.

3) The base-load current I_L is based on a duty cycle of 110 % for 60 s or 150 % for 10 s with a duty cycle duration of 300 s.

4) The base-load current I_H is based on a duty cycle of 150 % for 60 s or 160 % for 10 s with a duty cycle duration of 300 s.

5) Information regarding the correlation between the pulse frequency and maximum output current/output frequency is provided in the SINAMICS Low Voltage Engineering Manual.

6) The specified power loss represents the maximum value at 100 % utilization. The value is lower under normal operating conditions.

7) The connecting cables are included in the scope of supply of the Braking Module.

8) Total of all motor cables and DC link. Longer cable lengths for specific configurations are available on request. For additional information, please refer to the SINAMICS Low Voltage Engineering Manual.

© Siemens AG 2017

Technical specifications (continued)

Line voltage 380 ... 480 V 3 AC DC link voltage 510 ... 720 V DC		Motor Modules		
		6SL3320-1TE36-1AA3	6SL3320-1TE37-5AA3	6SL3320-1TE38-4AA3
Type rating				
• At I_L (50 Hz 400 V) [1]	kW	**315**	**400**	**450**
• At I_H (50 Hz 400 V) [1]	kW	250	315	400
• At I_L (60 Hz 460 V) [2]	hp	500	600	700
• At I_H (60 Hz 460 V) [2]	hp	350	450	600
Output current				
• Rated current $I_{rated\ O}$	A	605	745	840
• Base-load current I_L [3]	A	590	725	820
• Base-load current I_H [4]	A	460	570	700
• Maximum current $I_{max\ A}$	A	885	1087	1230
DC link current				
• Rated current $I_{rated\ DC}$ when supplied via				
- Basic/Smart Line Module	A	726	894	1008
- Active Line Module	A	653	805	907
• Base-load current $I_{L\ DC}$ [3] when supplied via				
- Basic/Smart Line Module	A	707	871	982
- Active Line Module	A	636	784	884
• Base-load current $I_{H\ DC}$ [4] when supplied via				
- Basic/Smart Line Module	A	646	795	897
- Active Line Module	A	581	716	807
Current demand				
• 24 V DC auxiliary power supply	A	1.0	1.0	1.0
• 400 V AC	A	3.6	3.6	3.6
DC link capacitance	µF	12600	15600	16800
Pulse frequency [5]				
• Rated frequency	kHz	1.25	1.25	1.25
• Pulse frequency, max.				
- Without current derating	kHz	1.25	1.25	1.25
- With current derating	kHz	7.5	7.5	7.5
Power loss, max. [6]				
• At 50 Hz 400 V	kW	5.84	6.68	7.15
• At 60 Hz 460 V	kW	6.3	7.3	7.8
Cooling air requirement	m^3/s (ft^3/s)	0.78 (27.5)	0.78 (27.5)	0.78 (27.5)
Sound pressure level L_{pA} (1 m) at 50/60 Hz	dB	70/73	70/73	70/73
DC link connection DCP, DCN		4 × hole for M10 Busbar	4 × hole for M10 Busbar	4 × hole for M10 Busbar
Connection for Braking Module DCPA, DCNA [7]		Connection for connection clip	Connection for connection clip	Connection for connection clip
Connection for dv/dt filter DCPS, DCNS		M10 screw	M10 screw	M10 screw
• Conductor cross section, max. (IEC)	mm^2	1 × 185	1 × 185	1 × 185
Motor connection U2, V2, W2		2 × M12 screw	2 × M12 screw	2 × M12 screw
• Conductor cross section, max. (IEC)	mm^2	4 × 240	4 × 240	4 × 240
Cable length, max. [8]				
• Shielded	m (ft)	300 (984)	300 (984)	300 (984)
• Unshielded	m (ft)	450 (1476)	450 (1476)	450 (1476)

Footnotes see next page.

© Siemens AG 2017

Technical specifications (continued)

Line voltage 380 ... 480 V 3 AC **DC link voltage 510 ... 720 V DC**		**Motor Modules**		
		6SL3320-1TE36-1AA3	6SL3320-1TE37-5AA3	6SL3320-1TE38-4AA3
PE1/GND connection		M12 screw	M12 screw	M12 screw
• Conductor cross section, max. (IEC)	mm^2	240	240	240
PE2/GND connection		2 × M12 screw	2 × M12 screw	2 × M12 screw
• Conductor cross section, max. (IEC)	mm^2	2 × 240	2 × 240	2 × 240
Degree of protection		IP00	IP00	IP00
Dimensions				
• Width	mm (in)	503 (19.8)	503 (19.8)	503 (19.8)
• Height	mm (in)	1475 (58.1)	1475 (58.1)	1475 (58.1)
• Depth	mm (in)	547 (21.5)	547 (21.5)	547 (21.5)
Weight, approx.	kg (lb)	290 (639)	290 (639)	290 (639)
Frame size		HX	HX	HX

1) Rated output of a typical 6-pole standard induction motor based on I_L or I_H for 400 V 3 AC 50 Hz.

2) Rated output of a typical 6-pole standard induction motor based on I_L or I_H for 460 V 3 AC 60 Hz.

3) The base-load current I_L is based on a duty cycle of 110 % for 60 s or 150 % for 10 s with a duty cycle duration of 300 s.

4) The base-load current I_H is based on a duty cycle of 150 % for 60 s or 160 % for 10 s with a duty cycle duration of 300 s.

5) Information regarding the correlation between the pulse frequency and maximum output current/output frequency is provided in the SINAMICS Low Voltage Engineering Manual.

6) The specified power loss represents the maximum value at 100 % utilization. The value is lower under normal operating conditions.

7) The connecting cables are included in the scope of supply of the Braking Module.

8) Total of all motor cables and DC link. Longer cable lengths for specific configurations are available on request. For additional information, please refer to the SINAMICS Low Voltage Engineering Manual.

© Siemens AG 2017

Technical specifications (continued)

Line voltage 380 ... 480 V 3 AC DC link voltage 510 ... 720 V DC		Motor Modules		
		6SL3320-1TE41-0AA3	6SL3320-1TE41-2AA3	6SL3320-1TE41-4AA3
Type rating				
• At I_L (50 Hz 400 V) [1]	kW	**560**	**710**	**800**
• At I_H (50 Hz 400 V) [1]	kW	450	560	710
• At I_L (60 Hz 460 V) [2]	hp	800	1000	1150
• At I_H (60 Hz 460 V) [2]	hp	700	900	1000
Output current				
• Rated current $I_{rated\ O}$	A	985	1260	1405
• Base-load current I_L [3]	A	960	1230	1370
• Base-load current I_H [4]	A	860	1127	1257
• Maximum current $I_{max\ A}$	A	1440	1845	2055
DC link current				
• Rated current $I_{rated\ DC}$ when supplied via				
- Basic/Smart Line Module	A	1182	1512	1686
- Active Line Module	A	1064	1361	1517
• Base-load current $I_{L\ DC}$ [3] when supplied via				
- Basic/Smart Line Module	A	1152	1474	1643
- Active Line Module	A	1037	1326	1479
• Base-load current $I_{H\ DC}$ [4] when supplied from				
- Basic/Smart Line Module	A	1051	1345	1500
- Active Line Module	A	946	1211	1350
Current demand				
• 24 V DC auxiliary power supply	A	1.25	1.4	1.4
• 400 V AC	A	5.4	5.4	5.4
DC link capacitance	µF	18900	26100	28800
Pulse frequency [5]				
• Rated pulse frequency	kHz	1.25	1.25	1.25
• Pulse frequency, max.				
- Without current derating	kHz	1.25	1.25	1.25
- With current derating	kHz	7.5	7.5	7.5
Power loss, max. [6]				
• At 50 Hz 400 V	kW	9.5	11.1	12.0
• At 60 Hz 460 V	kW	10.2	12.0	13.0
Cooling air requirement	m^3/s (ft^3/s)	1.08 (38.1)	1.08 (38.1)	1.08 (38.1)
Sound pressure level L_{pA} (1 m) at 50/60 Hz	dB	71/73	71/73	71/73
DC link connection DCP, DCN		4 × hole for M10 Busbar	4 × hole for M10 Busbar	4 × hole for M10 Busbar
Connection for Braking Module DCPA, DCNA [7]		Connection for connection clip	Connection for connection clip	Connection for connection clip
Connection for dv/dt filter DCPS, DCNS		2 x M10 screw	2 x M10 screw	2 x M10 screw
• Conductor cross section, max. (IEC)	mm^2	2 × 185	2 × 185	2 × 185
Motor connection U2, V2, W2		3 × M12 screw	3 × M12 screw	3 × M12 screw
• Conductor cross section, max. (IEC)	mm^2	6 × 240	6 × 240	6 × 240
Cable length, max. [8]				
• Shielded	m (ft)	300 (984)	300 (984)	300 (984)
• Unshielded	m (ft)	450 (1476)	450 (1476)	450 (1476)

Footnotes see next page.

© Siemens AG 2017

Technical specifications (continued)

Line voltage 380 ... 480 V 3 AC **DC link voltage 510 ... 720 V DC**		**Motor Modules**		
		6SL3320-1TE41-0AA3	6SL3320-1TE41-2AA3	6SL3320-1TE41-4AA3
PE1/GND connection		M12 screw	M12 screw	M12 screw
• Conductor cross section, max. (IEC)	mm^2	240	240	240
PE2/GND connection		3 × M12 screw	3 × M12 screw	3 × M12 screw
• Conductor cross section, max. (IEC)	mm^2	3 × 240	3 × 240	3 × 240
Degree of protection		IP00	IP00	IP00
Dimensions				
• Width	mm (in)	704 (27.7)	704 (27.7)	704 (27.7)
• Height	mm (in)	1475 (58.1)	1475 (58.1)	1475 (58.1)
• Depth	mm (in)	549 (21.6)	549 (21.6)	549 (21.6)
Weight, approx.	kg (lb)	450 (992)	450 (992)	450 (992)
Frame size		JX	JX	JX

1) Rated output of a typical 6-pole standard induction motor based on I_L or I_H for 400 V 3 AC 50 Hz.

2) Rated output of a typical 6-pole standard induction motor based on I_L or I_H for 460 V 3 AC 60 Hz.

3) The base-load current I_L is based on a duty cycle of 110 % for 60 s or 150 % for 10 s with a duty cycle duration of 300 s.

4) The base-load current I_H is based on a duty cycle of 150 % for 60 s or 160 % for 10 s with a duty cycle duration of 300 s.

5) Information regarding the correlation between the pulse frequency and maximum output current/output frequency is provided in the SINAMICS Low Voltage Engineering Manual.

6) The specified power loss represents the maximum value at 100 % utilization. The value is lower under normal operating conditions.

7) The connecting cables are included in the scope of supply of the Braking Module.

8) Total of all motor cables and DC link. Longer cable lengths for specific configurations are available on request. For additional information, please refer to the SINAMICS Low Voltage Engineering Manual.

© Siemens AG 2017

Technical specifications (continued)

Line voltage 500 ... 690 V 3 AC DC link voltage 675 ... 1035 V DC		Motor Modules			
		6SL3320-1TG28-5AA3	6SL3320-1TG31-0AA3	6SL3320-1TG31-2AA3	6SL3320-1TG31-5AA3
Type rating					
• At I_L (50 Hz 690 V) [1]	kW	**75**	**90**	**110**	**132**
• At I_H (50 Hz 690 V) [1]	kW	55	75	90	110
• At I_L (50 Hz 500 V) [1]	kW	55	55	75	90
• At I_H (50 Hz 500 V) [1]	kW	45	55	75	90
• At I_L (60 Hz 575 V) [2]	hp	75	75	100	150
• At I_H (60 Hz 575 V) [2]	hp	75	75	100	125
Output current					
• Rated current $I_{rated\ O}$	A	85	100	120	150
• Base-load current I_L [3]	A	80	95	115	142
• Base-load current I_H [4]	A	76	89	107	134
• Maximum current $I_{max\ A}$	A	120	142	172	213
DC link current					
• Rated current $I_{rated\ DC}$ when supplied via					
- Basic/Smart Line Module	A	102	120	144	180
- Active Line Module	A	92	108	130	162
• Base-load current $I_{L\ DC}$ [3] when supplied via					
- Basic/Smart Line Module	A	99	117	140	175
- Active Line Module	A	89	105	126	157
• Base-load current $I_{H\ DC}$ [4] when supplied via					
- Basic/Smart Line Module	A	90	106	128	160
- Active Line Module	A	81	96	115	144
Current demand					
• 24 V DC auxiliary power supply	A	0.8	0.8	0.8	0.8
• 500 V AC	A	0.7	0.7	0.7	0.7
• 690 V AC	A	0.4	0.4	0.4	0.4
DC link capacitance	µF	1200	1200	1600	2800
Pulse frequency [5]					
• Rated frequency	kHz	1.25	1.25	1.25	1.25
• Pulse frequency, max.					
- Without current derating	kHz	1.25	1.25	1.25	1.25
- With current derating	kHz	7.5	7.5	7.5	7.5
Power loss, max. [6]					
• At 50 Hz 690 V	kW	1.17	1.43	1.89	1.8
• At 60 Hz 575 V	kW	1.1	1.3	1.77	1.62
Cooling air requirement	m^3/s (ft^3/s)	0.17 (6.00)	0.17 (6.00)	0.17 (6.00)	0.17 (6.00)
Sound pressure level L_{pA} (1 m) at 50/60 Hz	dB	64/67	64/67	64/67	64/67
DC link connection DCP, DCN		M10 screw	M10 screw	M10 screw	M10 screw
• Conductor cross section, max. (IEC)	mm^2	2 × 185	2 × 185	2 × 185	2 × 185
Connection for Braking Module DCPA, DCNA [7]		M6 stud	M6 stud	M6 stud	M6 stud
Connection for dv/dt filter DCPS, DCNS		M8 screw	M8 screw	M8 screw	M8 screw
• Conductor cross section, max. (IEC)	mm^2	1 × 70	1 × 70	1 × 70	1 × 70
Motor connection U2, V2, W2		M10 screw	M10 screw	M10 screw	M10 screw
• Conductor cross section, max. (IEC)	mm^2	2 × 185	2 × 185	2 × 185	2 × 185

Footnotes see next page.

© Siemens AG 2017

Technical specifications (continued)

Line voltage 500 ... 690 V 3 AC DC link voltage 675 ... 1035 V DC		Motor Modules			
		6SL3320-1TG28-5AA3	6SL3320-1TG31-0AA3	6SL3320-1TG31-2AA3	6SL3320-1TG31-5AA3
Cable length, max. [8]					
• Shielded	m (ft)	300 (984)	300 (984)	300 (984)	300 (984)
• Unshielded	m (ft)	450 (1476)	450 (1476)	450 (1476)	450 (1476)
PE1/GND connection		M10 screw	M10 screw	M10 screw	M10 screw
• Conductor cross section, max. (IEC)	mm^2	2 × 185	2 × 185	2 × 185	2 × 185
PE2/GND connection		M10 screw	M10 screw	M10 screw	M10 screw
• Conductor cross section, max. (IEC)	mm^2	2 × 185	2 × 185	2 × 185	2 × 185
Degree of protection		IP20	IP20	IP20	IP20
Dimensions					
• Width	mm (in)	326 (12.8)	326 (12.8)	326 (12.8)	326 (12.8)
• Height	mm (in)	1400 (55.1)	1400 (55.1)	1400 (55.1)	1400 (55.1)
• Depth	mm (in)	356 (14.0)	356 (14.0)	356 (14.0)	356 (14.0)
Weight, approx.	kg (lb)	95 (209)	95 (209)	95 (209)	95 (209)
Frame size		FX	FX	FX	FX

1) Rated output of a typical 6-pole standard induction motor based on I_L or I_H for 500 V or 690 V 3 AC 50 Hz.

2) Rated output of a typical 6-pole standard induction motor based on I_L or I_H for 575 V 3 AC 60 Hz.

3) The base-load current I_L is based on a duty cycle of 110 % for 60 s or 150 % for 10 s with a duty cycle duration of 300 s.

4) The base-load current I_H is based on a duty cycle of 150 % for 60 s or 160 % for 10 s with a duty cycle duration of 300 s.

5) Information regarding the correlation between the pulse frequency and maximum output current/output frequency is provided in the SINAMICS Low Voltage Engineering Manual.

6) The specified power loss represents the maximum value at 100 % utilization. The value is lower under normal operating conditions.

7) The connecting cables are included in the scope of supply of the Braking Module.

8) Total of all motor cables and DC link. Longer cable lengths for specific configurations are available on request. For additional information, please refer to the SINAMICS Low Voltage Engineering Manual.

© Siemens AG 2017

Technical specifications (continued)

Line voltage 500 ... 690 V 3 AC DC link voltage 675 ... 1035 V DC		Motor Modules			
		6SL3320-1TG31-8AA3	6SL3320-1TG32-2AA3	6SL3320-1TG32-6AA3	6SL3320-1TG33-3AA3
Type rating					
• At I_L (50 Hz 690 V) [1]	kW	**160**	**200**	**250**	**315**
• At I_H (50 Hz 690 V) [1]	kW	132	160	200	250
• At I_L (50 Hz 500 V) [1]	kW	110	132	160	200
• At I_H (50 Hz 500 V) [1]	kW	90	110	132	160
• At I_L (60 Hz 575 V) [2]	hp	150	200	250	300
• At I_H (60 Hz 575 V) [2]	hp	150	200	200	250
Output current					
• Rated current $I_{rated\ O}$	A	175	215	260	330
• Base-load current I_L [3]	A	171	208	250	320
• Base-load current I_H [4]	A	157	192	233	280
• Maximum current $I_{max\ A}$	A	255	312	375	480
DC link current					
• Rated current $I_{rated\ DC}$ when supplied via					
- Basic/Smart Line Module	A	210	258	312	396
- Active Line Module	A	189	232	281	356
• Base-load current $I_{L\ DC}$ [3] when supplied via					
- Basic/Smart Line Module	A	204	251	304	386
- Active Line Module	A	184	226	273	347
• Base-load current $I_{H\ DC}$ [4] when supplied via					
- Basic/Smart Line Module	A	186	229	277	352
- Active Line Module	A	168	206	250	316
Current demand					
• 24 V DC auxiliary power supply	A	0.9	0.9	0.9	0.9
• 500 V AC	A	1.5	1.5	1.5	1.5
• 690 V AC	A	1.0	1.0	1.0	1.0
DC link capacitance	µF	2800	2800	3900	4200
Pulse frequency [5]					
• Rated frequency	kHz	1.25	1.25	1.25	1.25
• Pulse frequency, max.					
- Without current derating	kHz	1.25	1.25	1.25	1.25
- With current derating	kHz	7.5	7.5	7.5	7.5
Power loss, max. [6]					
• At 50 Hz 690 V	kW	2.67	3.09	3.62	4.34
• At 60 Hz 575 V	kW	2.5	2.91	3.38	3.98
Cooling air requirement	m^3/s (ft^3/s)	0.36 (12.7)	0.36 (12.7)	0.36 (12.7)	0.36 (12.7)
Sound pressure level L_{pA} (1 m) at 50/60 Hz	dB	69/73	69/73	69/73	69/73
DC link connection DCP, DCN		M10 screw	M10 screw	M10 screw	M10 screw
• Conductor cross section, max. (IEC)	mm^2	2 × 240	2 × 240	2 × 240	2 × 240
Connection for Braking Module DCPA, DCNA [7]		M6 stud	M6 stud	M6 stud	M6 stud
Connection for dv/dt filter DCPS, DCNS		M8 screw	M8 screw	M8 screw	M8 screw
• Conductor cross section, max. (IEC)	mm^2	1 × 70	1 × 70	1 × 70	1 × 70
Motor connection U2, V2, W2		M10 screw	M10 screw	M10 screw	M10 screw
• Conductor cross section, max. (IEC)	mm^2	2 × 240	2 × 240	2 × 240	2 × 240

Footnotes see next page.

© Siemens AG 2017

Technical specifications (continued)

Line voltage 500 ... 690 V 3 AC DC link voltage 675 ... 1035 V DC		Motor Modules			
		6SL3320-1TG31-8AA3	6SL3320-1TG32-2AA3	6SL3320-1TG32-6AA3	6SL3320-1TG33-3AA3
Cable length, max. [8]					
• Shielded	m (ft)	300 (984)	300 (984)	300 (984)	300 (984)
• Unshielded	m (ft)	450 (1476)	450 (1476)	450 (1476)	450 (1476)
PE1/GND connection		M10 screw	M10 screw	M10 screw	M10 screw
• Conductor cross section, max. (IEC)	mm^2	2 × 240	2 × 240	2 × 240	2 × 240
PE2/GND connection		M10 screw	M10 screw	M10 screw	M10 screw
• Conductor cross section, max. (IEC)	mm^2	2 × 240	2 × 240	2 × 240	2 × 240
Degree of protection		IP20	IP20	IP20	IP20
Dimensions					
• Width	mm (in)	326 (12.8)	326 (12.8)	326 (12.8)	326 (12.8)
• Height	mm (in)	1533 (60.3)	1533 (60.3)	1533 (60.3)	1533 (60.3)
• Depth	mm (in)	545 (21.4)	545 (21.4)	545 (21.4)	545 (21.4)
Weight, approx.	kg (lb)	136 (300)	136 (300)	136 (300)	136 (300)
Frame size		GX	GX	GX	GX

1) Rated output of a typical 6-pole standard induction motor based on I_L or I_H for 500 V or 690 V 3 AC 50 Hz.

2) Rated output of a typical 6-pole standard induction motor based on I_L or I_H for 575 V 3 AC 60 Hz.

3) The base-load current I_L is based on a duty cycle of 110 % for 60 s or 150 % for 10 s with a duty cycle duration of 300 s.

4) The base-load current I_H is based on a duty cycle of 150 % for 60 s or 160 % for 10 s with a duty cycle duration of 300 s.

5) Information regarding the correlation between the pulse frequency and maximum output current/output frequency is provided in the SINAMICS Low Voltage Engineering Manual.

6) The specified power loss represents the maximum value at 100 % utilization. The value is lower under normal operating conditions.

7) The connecting cables are included in the scope of supply of the Braking Module.

8) Total of all motor cables and DC link. Longer cable lengths for specific configurations are available on request. For additional information, please refer to the SINAMICS Low Voltage Engineering Manual.

© Siemens AG 2017

Technical specifications (continued)

Line voltage 500 ... 690 V 3 AC DC link voltage 675 ... 1035 V DC		Motor Modules			
		6SL3320-1TG34-1AA3	6SL3320-1TG34-7AA3	6SL3320-1TG35-8AA3	6SL3320-1TG37-4AA3
Type rating					
• At I_L (50 Hz 690 V) [1]	kW	**400**	**450**	**560**	**710**
• At I_H (50 Hz 690 V) [1]	kW	315	400	450	630
• At I_L (50 Hz 500 V) [1]	kW	250	315	400	500
• At I_H (50 Hz 500 V) [1]	kW	200	250	315	450
• At I_L (60 Hz 575 V) [2]	hp	400	450	600	700
• At I_H (60 Hz 575 V) [2]	hp	350	450	500	700
Output current					
• Rated current $I_{rated\ O}$	A	410	465	575	735
• Base-load current I_L [3]	A	400	452	560	710
• Base-load current I_H [4]	A	367	416	514	657
• Maximum current $I_{max\ A}$	A	600	678	840	1065
DC link current					
• Rated current $I_{rated\ DC}$ when supplied via					
- Basic/Smart Line Module	A	492	558	690	882
- Active Line Module	A	443	502	621	794
• Base-load current $I_{L\ DC}$ [3] when supplied via					
- Basic/Smart Line Module	A	479	544	672	859
- Active Line Module	A	431	489	605	774
• Base-load current $I_{H\ DC}$ [4] when supplied via					
- Basic/Smart Line Module	A	437	496	614	784
- Active Line Module	A	394	446	552	706
Current demand					
• 24 V DC auxiliary power supply	A	1.0	1.0	1.0	1.25
• 500 V AC	A	3.0	3.0	3.0	4.4
• 690 V AC	A	2.1	2.1	2.1	3.1
DC link capacitance	µF	7400	7400	7400	11100
Pulse frequency [5]					
• Rated frequency	kHz	1.25	1.25	1.25	1.25
• Pulse frequency, max.					
- Without current derating	kHz	1.25	1.25	1.25	1.25
- With current derating	kHz	7.5	7.5	7.5	7.5
Power loss, max. [6]					
• At 50 Hz 690 V	kW	6.13	6.80	10.3	10.9
• At 60 Hz 575 V	kW	5.71	6.32	9.7	10
Cooling air requirement	m^3/s (ft^3/s)	0.78 (27.5)	0.78 (27.5)	0.78 (27.5)	1.08 (38.1)
Sound pressure level L_{pA} (1 m) at 50/60 Hz	dB	70/73	70/73	70/73	71/73
DC link connection DCP, DCN		4 × hole for M10 Busbar	4 × hole for M10 Busbar	4 × hole for M10 Busbar	4 × hole for M10 Busbar
Connection for Braking Module DCPA, DCNA [7]		M8 stud	M8 stud	M8 stud	M8 stud
Connection for dv/dt filter DCPS, DCNS		M10 screw	M10 screw	M10 screw	2 x M10 screw
• Conductor cross section, max. (IEC)	mm^2	1 × 185	1 × 185	1 × 185	2 × 185
Motor connection U2, V2, W2		2 × M12 screw	2 × M12 screw	2 × M12 screw	3 × M12 screw
• Conductor cross section, max. (IEC)	mm^2	4 × 240	4 × 240	4 × 240	6 × 240

Footnotes see next page.

© Siemens AG 2017

Technical specifications (continued)

Line voltage 500 ... 690 V 3 AC DC link voltage 675 ... 1035 V DC		Motor Modules			
		6SL3320-1TG34-1AA3	6SL3320-1TG34-7AA3	6SL3320-1TG35-8AA3	6SL3320-1TG37-4AA3
Cable length, max. [8]					
• Shielded	m (ft)	300 (984)	300 (984)	300 (984)	300 (984)
• Unshielded	m (ft)	450 (1476)	450 (1476)	450 (1476)	450 (1476)
PE1/GND connection		M12 screw	M12 screw	M12 screw	M12 screw
• Conductor cross section, max. (IEC)	mm^2	240	240	240	240
PE2/GND connection		2 × M12 screw	2 × M12 screw	2 × M12 screw	3 × M12 screw
• Conductor cross section, max. (IEC)	mm^2	2 × 240	2 × 240	2 × 240	3 × 240
Degree of protection		IP00	IP00	IP00	IP00
Dimensions					
• Width	mm (in)	503 (19.8)	503 (19.8)	503 (19.8)	704 (27.7)
• Height	mm (in)	1475 (58.1)	1475 (58.1)	1475 (58.1)	1475 (58.1)
• Depth	mm (in)	547 (21.5)	547 (21.5)	547 (21.5)	550 (21.6)
Weight, approx.	kg (lb)	290 (639)	290 (639)	290 (639)	450 (992)
Frame size		HX	HX	HX	JX

1) Rated output of a typical 6-pole standard induction motor based on I_L or I_H for 500 V or 690 V 3 AC 50 Hz.

2) Rated output of a typical 6-pole standard induction motor based on I_L or I_H for 575 V 3 AC 60 Hz.

3) The base-load current I_L is based on a duty cycle of 110 % for 60 s or 150 % for 10 s with a duty cycle duration of 300 s.

4) The base-load current I_H is based on a duty cycle of 150 % for 60 s or 160 % for 10 s with a duty cycle duration of 300 s.

5) Information regarding the correlation between the pulse frequency and maximum output current/output frequency is provided in the SINAMICS Low Voltage Engineering Manual.

6) The specified power loss represents the maximum value at 100 % utilization. The value is lower under normal operating conditions.

7) The connecting cables are included in the scope of supply of the Braking Module.

8) Total of all motor cables and DC link. Longer cable lengths for specific configurations are available on request. For additional information, please refer to the SINAMICS Low Voltage Engineering Manual.

© Siemens AG 2017

Technical specifications (continued)

Line voltage 500 ... 690 V 3 AC DC link voltage 675 ... 1035 V DC		Motor Modules			
		6SL3320-1TG38-1AA3	6SL3320-1TG38-8AA3	6SL3320-1TG41-0AA3	6SL3320-1TG41-3AA3
Type rating					
• At I_L (50 Hz 690 V) [1]	kW	**800**	**900**	**1000**	**1200**
• At I_H (50 Hz 690 V) [1]	kW	710	800	900	1000
• At I_L (50 Hz 500 V) [1]	kW	560	630	710	900
• At I_H (50 Hz 500 V) [1]	kW	500	560	630	800
• At I_L (60 Hz 575 V) [2]	hp	800	900	1000	1250
• At I_H (60 Hz 575 V) [2]	hp	700	800	900	1000
Output current					
• Rated current $I_{rated\ O}$	A	810	910	1025	1270
• Base-load current I_L [3]	A	790	880	1000	1230
• Base-load current I_H [4]	A	724	814	917	1136
• Maximum current $I_{max\ A}$	A	1185	1320	1500	1845
DC link current					
• Rated current $I_{rated\ DC}$ when supplied via					
- Basic/Smart Line Module	A	972	1092	1230	1524
- Active Line Module	A	875	983	1107	1372
• Base-load current $I_{L\ DC}$ [3] when supplied via					
- Basic/Smart Line Module	A	947	1064	1199	1485
- Active Line Module	A	853	958	1079	1337
• Base-load current $I_{H\ DC}$ [4] when supplied via					
- Basic/Smart Line Module	A	865	971	1094	1356
- Active Line Module	A	778	874	985	1221
Current demand					
• 24 V DC auxiliary power supply	A	1.25	1.4	1.4	1.4
• 500 V AC	A	4.4	4.4	4.4	4.4
• 690 V AC	A	3.1	3.1	3.1	3.1
DC link capacitance	µF	11100	14400	14400	19200
Pulse frequency [5]					
• Rated frequency	kHz	1.25	1.25	1.25	1.25
• Pulse frequency, max.					
- Without current derating	kHz	1.25	1.25	1.25	1.25
- With current derating	kHz	7.5	7.5	7.5	7.5
Power loss, max. [6]					
• At 50 Hz 690 V	kW	11.5	11.7	13.2	16.0
• At 60 Hz 575 V	kW	10.5	10.6	12.0	14.2
Cooling air requirement	m^3/s (ft^3/s)	1.08 (38.1)	1.08 (38.1)	1.08 (38.1)	1.08 (38.1)
Sound pressure level L_{pA} (1 m) at 50/60 Hz	dB	71/73	71/73	71/73	71/73
DC link connection DCP, DCN		4 × hole for M10 Busbar	4 × hole for M10 Busbar	4 × hole for M10 Busbar	4 × hole for M10 Busbar
Connection for Braking Module DCPA, DCNA [7]		M8 stud	M8 stud	M8 stud	M8 stud
Connection for dv/dt filter DCPS, DCNS		2 x M10 screw	2 x M10 screw	2 x M10 screw	2 x M10 screw
• Conductor cross section, max. (IEC)	mm^2	2 × 185	2 × 185	2 × 185	2 × 185
Motor connection U2, V2, W2		3 × M12 screw	3 × M12 screw	3 × M12 screw	3 × M12 screw
• Conductor cross section, max. (IEC)	mm^2	6 × 240	6 × 240	6 × 240	6 × 240

Footnotes see next page.

© Siemens AG 2017

Technical specifications (continued)

Line voltage 500 ... 690 V 3 AC DC link voltage 675 ... 1035 V DC		Motor Modules			
		6SL3320-1TG38-1AA3	6SL3320-1TG38-8AA3	6SL3320-1TG41-0AA3	6SL3320-1TG41-3AA3
Cable length, max. [8]					
• Shielded	m (ft)	300 (984)	300 (984)	300 (984)	300 (984)
• Unshielded	m (ft)	450 (1476)	450 (1476)	450 (1476)	450 (1476)
PE1/GND connection		M12 screw	M12 screw	M12 screw	M12 screw
• Conductor cross section, max. (IEC)	mm^2	240	240	240	240
PE2/GND connection		3 × M12 screw	3 × M12 screw	3 × M12 screw	3 × M12 screw
• Conductor cross section, max. (IEC)	mm^2	3 × 240	3 × 240	3 × 240	3 × 240
Degree of protection		IP00	IP00	IP00	IP00
Dimensions					
• Width	mm (in)	704 (27.7)	704 (27.7)	704 (27.7)	704 (27.7)
• Height	mm (in)	1475 (58.1)	1475 (58.1)	1475 (58.1)	1475 (58.1)
• Depth	mm (in)	550 (21.6)	550 (21.6)	550 (21.6)	550 (21.6)
Weight, approx.	kg (lb)	450 (992)	450 (992)	450 (992)	450 (992)
Frame size		JX	JX	JX	JX

1) Rated output of a typical 6-pole standard induction motor based on I_L or I_H for 500 V or 690 V 3 AC 50 Hz.

2) Rated output of a typical 6-pole standard induction motor based on I_L or I_H for 575 V 3 AC 60 Hz.

3) The base-load current I_L is based on a duty cycle of 110 % for 60 s or 150 % for 10 s with a duty cycle duration of 300 s.

4) The base-load current I_H is based on a duty cycle of 150 % for 60 s or 160 % for 10 s with a duty cycle duration of 300 s.

5) Information regarding the correlation between the pulse frequency and maximum output current/output frequency is provided in the SINAMICS Low Voltage Engineering Manual.

6) The specified power loss represents the maximum value at 100 % utilization. The value is lower under normal operating conditions.

7) The connecting cables are included in the scope of supply of the Braking Module.

8) Total of all motor cables and DC link. Longer cable lengths for specific configurations are available on request. For additional information, please refer to the SINAMICS Low Voltage Engineering Manual.

© Siemens AG 2017

Mounting device for air-cooled power blocks in chassis format

Overview

Power block mounting device for installing and removing the power blocks for the Basic Line Modules, Smart Line Modules, Active Line Modules, Power Modules, and Motor Modules in chassis format.

The mounting device is a mounting aid. It is placed in front of the module and attached to the module. The telescopic rails allow the device to be adjusted to the installation height of the power blocks.

Once the mechanical and electrical connections have been released, the Power block can be removed from the module.

The power block is guided and supported by the guide rails on the handling device.

Selection and ordering data

Description	Article No.
Mounting device for installing and removing power blocks	**6SL3766-1FA00-0AA0**

© Siemens AG 2017

Overview

The SINAMICS S120 liquid-cooled drive units are specifically designed to address the requirements relating to liquid cooling; they are characterized by their high power density and optimized footprint. Liquid cooling dissipates heat much more efficiently than air cooling systems. As a result, liquid-cooled units are much more compact than air-cooled units with the same power rating. Since the heat losses generated by the electronic components are almost completely dissipated by the liquid coolant, only very small cooling fans are required. This means that the devices are quiet in operation. Due to their compact dimensions and almost negligible cooling air requirement, liquid-cooled units are the preferred solution wherever installation space is restricted and/or the ambient operating conditions are rough.

Control cabinets with liquid cooling are easy to implement as sealed units with degrees of protection of IP55.

The product portfolio includes the following liquid-cooled SINAMICS S120 built-in units:

- Power Modules
- Basic Line Modules
- Active Line Modules
- Active Interface Modules
- Motor Modules

The associated system components such as line reactors, motor reactors, dv/dt filters plus VPL and sine-wave filters are air-cooled. Active Interface Modules are available in air-cooled and liquid-cooled versions.

Highlights of the liquid-cooled units

- Up to a 60 % smaller footprint than air-cooled drive converters
- All main components such as power semiconductors, DC link capacitors and balancing resistors are cooled by the cooling circuit
- Only a low flow rate is required
- Uniform pressure drop of 0.7 bar
- Automatic protective functions
- Nickel-plated busbars
- Low noise
- Compatible with all components and functions and tools of the SINAMICS system family
- The power rating can be extended by connecting units in parallel
- No equipment fans

Cabinet units in liquid-cooled version

Liquid-cooled SINAMICS S120 drive units are also available as cabinet units, including cooling system. For further information, please refer to the Catalog D 21.3.

© Siemens AG 2017

Overview (continued)

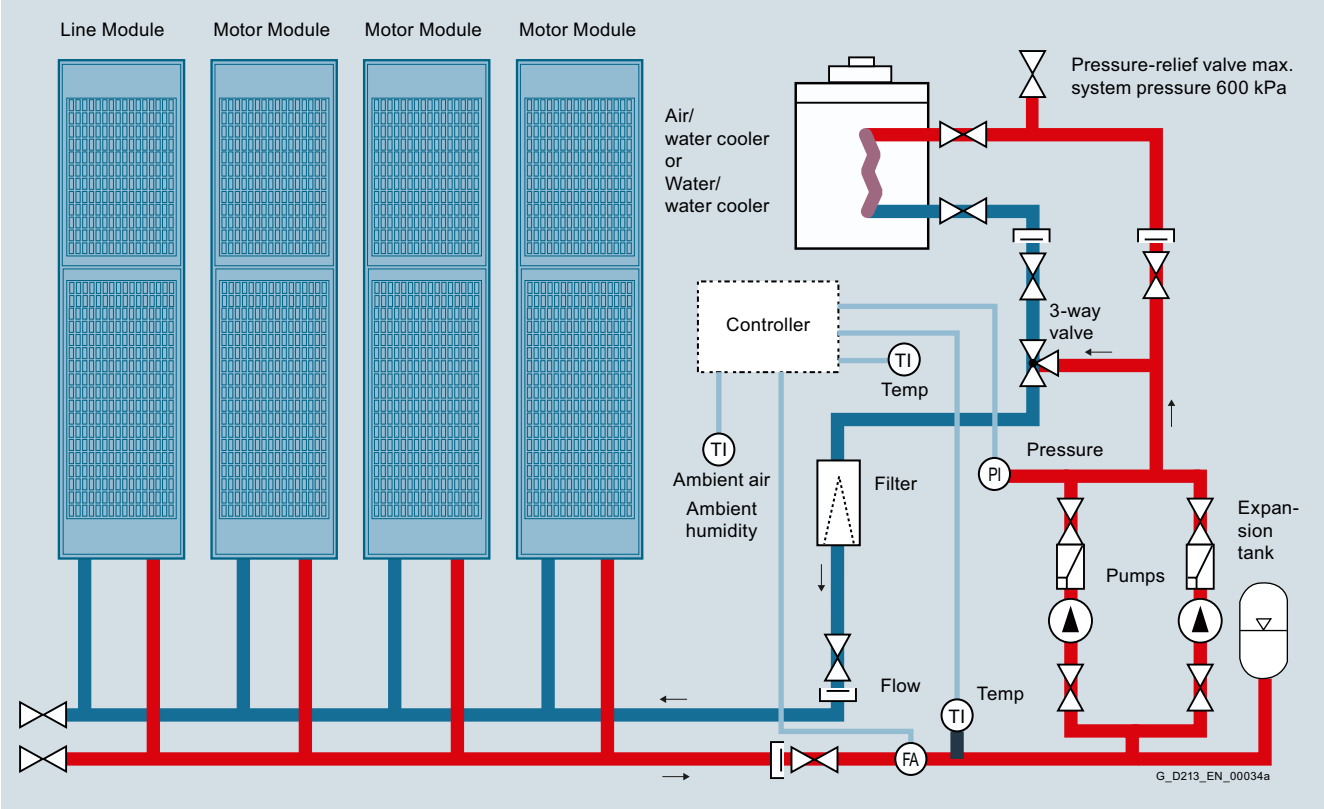

Example of a drive line-up with SINAMICS S120 liquid-cooled units

Technical specifications

General technical specifications

Unless clearly specified otherwise, the following technical data are valid for all the following components of the liquid-cooled SINAMICS S120 drive system in the chassis format.

Electrical specifications	
Rated voltages	380 ... 480 V 3 AC ±10 % (-15 % <1 min) 500 ... 690 V 3 AC ±10 % (-15 % <1 min)
Line supply types	Grounded TN/TT systems and non-grounded IT systems
Line frequency	47 ... 63 Hz
Overvoltage category	III to EN 61800-5-1
Electronics power supply	24 V DC, -15 % +20 % implemented as PELV circuit in accordance with EN 61800-5-1 Ground = negative pole grounded via the electronics
Rated short-circuit current per IEC, in conjunction with the specified fuses or circuit breakers	
• 1.1 ... 447 kW	65 kA
• 448 ... 671 kW	84 kA
• 672 ... 1193 kW	170 kA
• > 1194 kW	200 kA
Rated short-circuit current SCCR (Short Circuit Current Rating) according to UL508C (up to 600 V), in conjunction with the specified fuses or circuit breakers	
• 1.1 ... 447 kW	65 kA
• 448 ... 671 kW	84 kA
• 672 ... 1193 kW	170 kA
• > 1194 kW	200 kA

© Siemens AG 2017

Technical specifications (continued)

Electrical specifications			
Control method	Vector/Servo control with and without encoder or V/f control		
Fixed speeds	15 fixed speeds plus 1 minimum speed, parameterizable (in the default setting, 3 fixed setpoints plus 1 minimum speed are selectable using terminal block/PROFIBUS/PROFINET)		
Skippable speed ranges	4, parameterizable		
Setpoint resolution	0.001 rpm digital (14 bits + sign) 12 bits analog		
Braking operation	With Active Line Modules, four-quadrant operation as standard (energy recovery). With Basic Line Modules, two-quadrant operation as standard, braking by a Motor Module.		
Mechanical specifications			
Degree of protection	IP00 (IP20, without taking into account the connecting busbars)		
Protection class	I acc. to EN 61800-5-1		
Touch protection	EN 50274/DGUV regulation 3 when used as intended		
Cooling method	Liquid cooling with integrated heat exchanger in aluminum or stainless steel version		
Ambient conditions	**Storage** [1]	**Transport** [1]	**Operation**
Ambient temperature (air)	-25 ... +55 °C (-13 ... +131 °F) Class 1K4 acc. to EN 60721-3-1	-25 ... +70 °C (-13 ...+158 °F) Class 2K4 acc. to EN 60721-3-2	Line-side components, Power Modules, Line Modules and Motor Modules: 0 ... 45 °C (32 ...113 °F) without derating >45 ... 50 °C (113 ... 122 °F) see derating characteristics Control Units, supplementary system components, and Sensor Modules: 0 ... 55 °C (32 ...131 °F) (for operation in a control cabinet) DC link components and motor-side components: 0 ... 55 °C (32 ...131 °F)
Relative humidity Condensation, splashwater, and ice formation not permitted (EN 60204, Part 1)	5 ... 95 % Class 1K4 acc. to EN 60721-3-1	Max. 95 % at 40 °C (104 °F) Class 2K4 acc. to EN 60721-3-2	5 ... 95 % Class 3K3 acc. to EN 60721-3-3
Environmental class/ harmful chemical substances	Class 1C2 acc. to EN 60721-3-1	Class 2C2 acc. to EN 60721-3-2	Class 3C2 acc. to EN 60721-3-3
Organic/biological influences	Class 1B1 acc. to EN 60721-3-1	Class 2B1 acc. to EN 60721-3-2	Class 3B1 acc. to EN 60721-3-3
Degree of pollution	2 acc. to IEC/EN 61800-5-1		
Installation altitude	Up to 2000 m (6562 ft) above sea level without derating, > 2000 m (6562 ft) above sea level, refer to the derating data		
Mechanical stability	**Storage** [1]	**Transport** [1]	**Operation**
Vibratory load		Class 2M2 acc. to EN 60721-3-2	Test values acc. to EN 60068-2-6 test Fc: • 10 ... 58 Hz with constant deflection 0.075 mm • 58 ... 150 Hz with constant acceleration 9.81 m/s^2 (1 × *g*)
Shock load		Class 2M2 acc. to EN 60721-3-2	Test values acc. to EN 60068-2-27 test Ea: 98 m/s^2 (10 × *g*)/20 ms
Compliance with standards			
Conformances/ proofs of suitability according to	CE (EMC Directive No. 2014/30/EU, Low Voltage Directive No. 2014/35/EU and Machinery Directive 2006/42/EC for functional safety) RCM cULus (only for devices connected to line supply voltages 380 ... 480 V 3 AC and 500 ... 600 V 3 AC)		
Radio interference suppression	SINAMICS S120 chassis format units are not designed for connection to the public grid (first environment). Radio interference suppression is compliant with the EMC product standard for variable-speed drives EN 61800-3, "Second environment" (industrial line supplies). EMC disturbances can occur when connected to the public grid. For further information, see section configuration notes.		

Deviations from the specified class are underlined.

[1] In transport packaging.

© Siemens AG 2017

Technical specifications (continued)

Cooling circuit and coolant quality

The following tables and sections describe the quality requirements of the coolant used in the liquid-cooled SINAMICS S120 drive system in chassis format.

Cooling circuit	
• System pressure with reference to atmospheric pressure, max.	600 kPa
• Pressure drop at rated volumetric flow	70 kPa
• Recommended pressure range	80 ... 200 kPa
• Inlet temperature of liquid coolant	Dependent on ambient temperature, no condensation permitted 0 ... 45 °C (32 ...113 °F) without derating >45 … 50 °C (113 ... 122 °F), see derating data Anti-freeze essential for temperature range between 0 °C (32 °F) and 5 °C (41 °F)
Coolant quality	
• Coolant basis for aluminum heat sinks	Distilled, demineralized, completely desalinated water or deionized water with reduced electrical conductivity ISO 3696, quality 3 or based on IEC 60993
- Electrical conductivity	<30 µS/cm (3 mS/m)
- pH value	5 ... 8
- Components that can be oxidized as oxygen content	< 30 mg/l
- Residue after vaporization and drying at 110 °C	<10 mg/kg
• Coolant basis for stainless steel heat sinks	Filtered drinking water
- Electrical conductivity	<2000 µS/cm
- pH value	6.5 ... 9
- Chloride ions	<200 mg/l
- Sulfate ions	<240 mg/l
- Nitrate ions	< 50 mg/l
- Total hardness	< 1.7 mmol/l
- Dissolved substances	< 340 mg/l
- Size of entrained particles	< 100 µm
	The coolant definition specified here should only be considered as recommendation. For units that have been shipped, the information and data provided in the equipment manual supplied should be observed!

Antifreeze and inhibitors

Antifreeze	**Antifrogen N**	**Antifrogen L**	**DOWCAL 100**
Manufacturer	Clariant	Clariant	DOW
Chemical base	Ethylene glycol	Propylene glycol	Ethylene glycol
Minimum concentration	20 %	25 %	20 %
Anti-freeze agent with minimum concentration	-10 °C	-10 °C	-10 °C
Maximum concentration	45 %	48 %	44 %
Anti-freeze agent with maximum concentration	-30 °C	-30 °C	-30 °C
Inhibitor content	Contains inhibitors with nitrites	Contains inhibitors that are free of nitrates, amines, borates and phosphates	Contains inhibitors that are free of nitrates, amines and phosphates
Biocide action with a concentration of	> 20 %	> 30 %	> 20 %

Biocides prevent corrosion that is caused by slime-forming, corrosive or iron-depositing bacteria. These can occur in closed cooling circuits with low water hardness and in open cooling circuits. Biocides must always be selected according to the relevant bacterial risks. Compatibility with inhibitors or antifreeze used with them must be checked on a case-by-case basis.

Inhibitors	**Antifrogen N**	**ANTICORIT S 2000 A**
Manufacturer	Clariant	Fuchs
Chemical base	Ethylene glycol	–
Minimum concentration	20 %	4 %
Maximum concentration	45 %	5 %

Recommended service

The manufacturer of the antifreeze/inhibitor should analyze the coolant at least once per annum. The concentration and boundary conditions of the antifreeze/inhibitor should be checked. It may be necessary to correct the concentration on the plant side.

© Siemens AG 2017

Technical specifications (continued)

Protection against condensation

With liquid-cooled units, warm air can condense on the cold surfaces of heat sinks, pipes and hoses. This condensation depends on the air humidity and the temperature difference between the ambient air and the coolant.

The water which is produced as a result of condensation can cause corrosion as well as electrical damage such as creepage shorts and flashovers. As the SINAMICS units cannot prevent condensation if it is caused by the prevailing climatic conditions, any potential risk of condensation must be prevented by appropriate engineering or by precautionary measures implemented by the customer. These measures include the following:

- a fixed coolant temperature that has been adjusted to the expected air humidity or ambient temperature ensures that critical differences between the coolant and ambient air temperatures do not develop or
- temperature regulation of the coolant as a function of the ambient air temperature

The temperature at which water vapor contained in the air condenses into water is known as the dew point. To prevent condensation reliably, the coolant temperature must always be higher than the dew point.

The table below specifies the dew point as a function of room temperature T and relative air humidity Φ for an atmospheric pressure of 100 kPa (1 bar). This corresponds to an installation altitude of 0 up to approximately 500 m (1640 ft) above sea level. Since the dew point drops as the air pressure decreases, the dew point values at higher installation altitudes are lower than the specified table values. It is therefore the safest approach to engineer the coolant temperature according to the values in the table for an installation altitude of zero.

A detailed description of the cooling circuits and the recommended coolant is given in the SINAMICS Low Voltage Engineering Manual.

Ambient temperature	**Relative air humidity Φ**										
T	20 %	30 %	40 %	50 %	60 %	70 %	80 %	85 %	90 %	95 %	100 %
10 °C (50 °F)	<0 °C (32 °F)	<0 °C (32 °F)	<0 °C (32 °F)	0.2 °C (32.4 °F)	2.7 °C (36.9 °F)	4.8 °C (40.6 °F)	6.7 °C (44.1 °F)	7.6 °C (45.7 °F)	8.4 °C (47.1 °F)	9.2 °C (48.6 °F)	10 °C (50 °F)
20 °C (68 °F)	<0 °C (32 °F)	2 °C (35.6 °F)	6 °C (42.8 °F)	9.3 °C (48.7 °F)	12 °C (53.6 °F)	14.3 °C (57.7 °F)	16.4 °C (61.5 °F)	17.4 °C (63.3 °F)	18.3 °C (64.9 °F)	19.1 °C (66.4 °F)	20 °C (68 °F)
25 °C (77 °F)	0.6 °C (33.1 °F)	6.3 °C (43.3 °F)	10.5 °C (50.9 °F)	13.8 °C (56.8 °F)	16.7 °C (62.1 °F)	19.1 °C (66.4 °F)	21.2 °C (70.2 °F)	22.2 °C (72 °F)	23.2 °C (73.8 °F)	24.1 °C (75.4 °F)	24.9 °C (76.8 °F)
30 °C (86 °F)	4.7 °C (40.5 °F)	10.5 °C (50.9 °F)	14.9 °C (58.8 °F)	18.4 °C (65.1 °F)	21.3 °C (70.3 °F)	23.8 °C (74.8 °F)	26.1 °C (79 °F)	27.1 °C (80.8 °F)	28.1 °C (82.6 °F)	29 °C (84.2 °F)	29.9 °C (85.8 °F)
35 °C (95 °F)	8.7 °C (47.7 °F)	14.8 °C (58.6 °F)	19.3 °C (66.7 °F)	22.9 °C (73.2 °F)	26 °C (78.8 °F)	28.6 °C (83.5 °F)	30.9 °C (87.6 °F)	32 °C (89.6 °F)	33 °C (91.4 °F)	34 °C (93.2 °F)	34.9 °C (94.8 °F)
40 °C (104 °F)	12.8 °C (55 °F)	19.1 °C (66.4 °F)	23.7 °C (74.7 °F)	27.5 °C (81.5 °F)	30.6 °C (87.1 °F)	33.4 °C (92.1 °F)	35.8 °C (96.4 °F)	36.9 °C (98.4 °F)	37.9 °C (100.2 °F)	38.9 °C (102 °F)	39.9 °C (103.8 °F)
45 °C (113 °F)	16.8 °C (62.2 °F)	23.3 °C (73.9 °F)	28.2 °C (82.8 °F)	32 °C (89.6 °F)	35.3 °C (95.5 °F)	38.1 °C (101.6 °F)	40.6 °C (105.1 °F)	41.8 °C (107.2 °F)	42.9 °C (109.2 °F)	43.9 °C (111 °F)	44.9 °C (112.8 °F)
50 °C (122 °F)	20.8 °C (69.4 °F)	27.5 °C (81.5 °F)	32.6 °C (90.7 °F)	36.6 °C (97.9 °F)	40 °C (104 °F)	42.9 °C (109.2 °F)	45.5 °C (113.9 °F)	46.6 °C (115.9 °F)	47.8 °C (118 °F)	48.9 °C (120 °F)	49.9 °C (121.8 °F)

Characteristic curves

Pressure drop

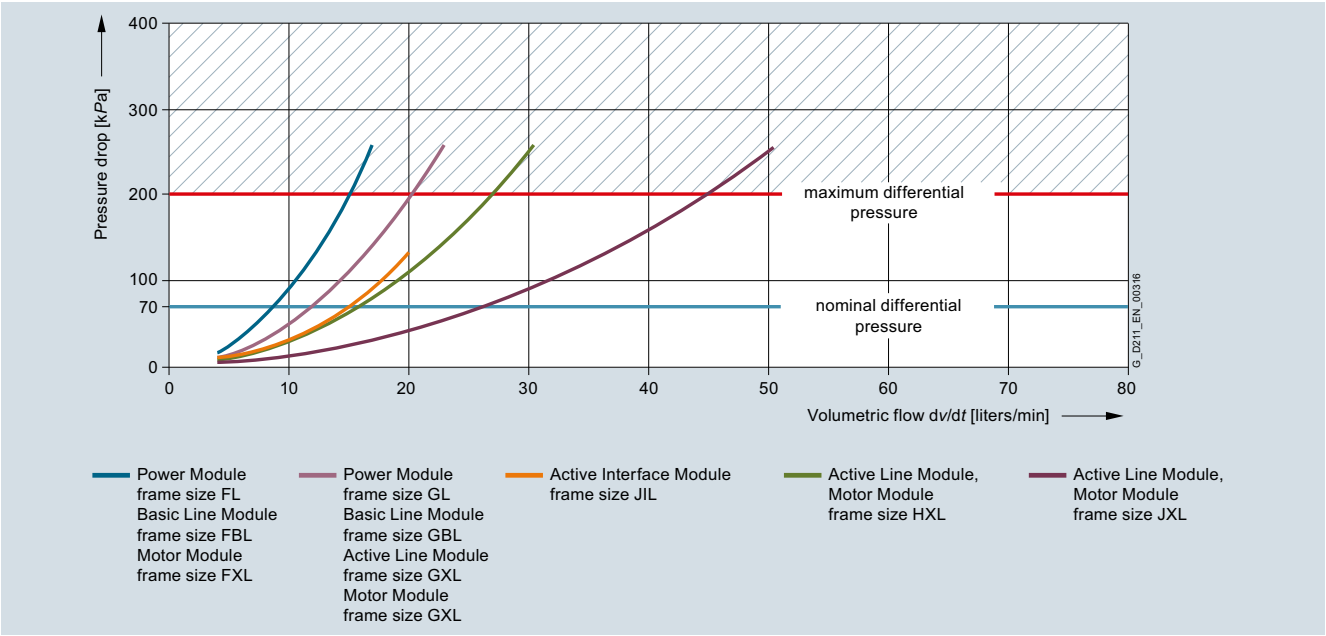

Pressure drop for liquid-cooled built-in units in chassis format

The pressure drop characteristics are valid for water. If antifreeze is used, the characteristics typically shift to the left.

For further information, please refer to the SINAMICS Low Voltage Engineering Manual.

© Siemens AG 2017

Characteristic curves (continued)

Derating

Liquid-cooled SINAMICS S120 chassis format units are rated for an ambient temperature of 45 °C (113 °F) and installation altitudes up to 2000 m (6562 ft) above sea level. At ambient temperatures > 45 °C (113 °F), the output current must be reduced. Ambient temperatures above 50 °C (122 °F) are not permissible. At installation altitudes > 2000 m (6562 ft) above sea level, it must be taken into account that the air pressure, and therefore air density, decreases as the height increases. As a consequence, the cooling efficiency and the insulation capacity of the air also decrease.

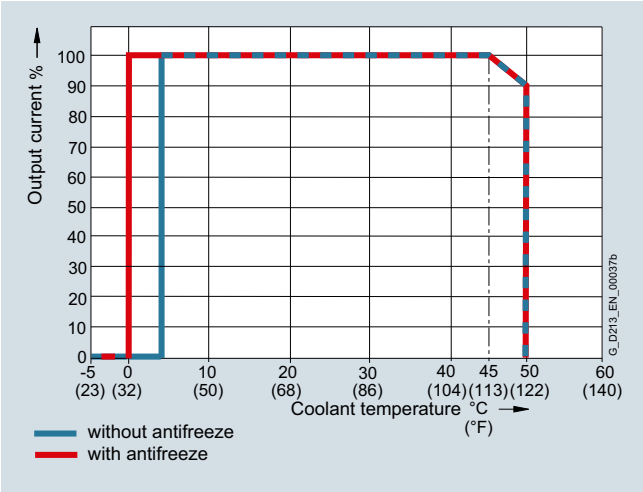

Current derating as a function of the temperature of the cooling liquid [1)]

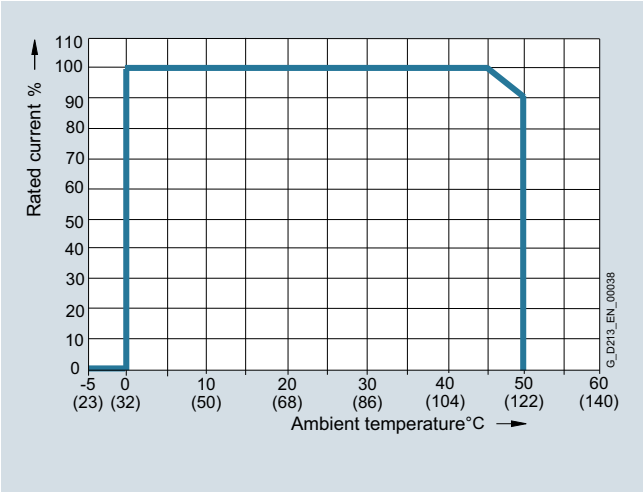

Current derating as a function of ambient temperature [1)]

[1)] The factors of the two curves must not be multiplied. The highest value in each case must be assumed for the purposes of calculation, so that the derating factor in the worst-case scenario is 0.9.

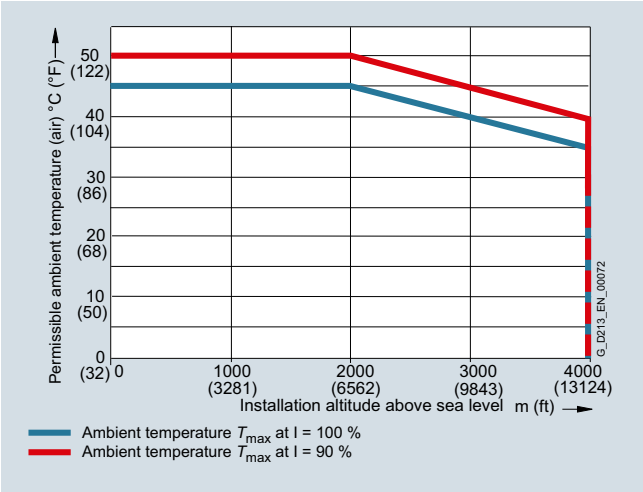

Permissible ambient temperature as a function of installation altitude

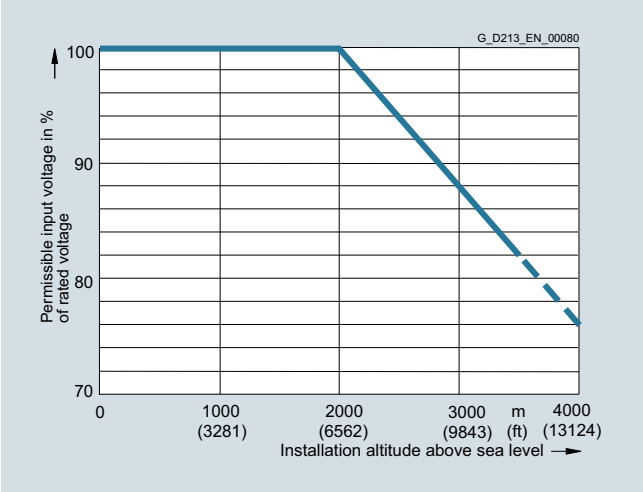

Voltage derating as a function of installation altitude

[1)] The factors of the two curves must not be multiplied. The highest value in each case must be assumed for the purposes of calculation, so that the derating factor in the worst-case scenario is 0.9.

© Siemens AG 2017

Characteristic curves (continued)

Current derating for Power Modules and Motor Modules in chassis format as a function of the pulse frequency

To reduce motor noise or to increase output frequency, the pulse frequency can be increased relative to the factory setting (1.25 kHz or 2 kHz). When the pulse frequency is increased, the derating factor of the output current must be taken into account. This derating factor must be applied to the currents specified in the technical specifications.

For additional information, please refer to the SINAMICS Low Voltage Engineering Manual.

The following tables list the rated output currents of the SINAMICS S120 Power Modules and Motor Modules with pulse frequency set in the factory as well as the current derating factors (permissible output currents referred to the rated output current) for higher pulse frequencies.

Derating factor of the output current as a function of the pulse frequency for units with a rated pulse frequency of 2 kHz

Power Module Motor Module	Type rating at 400 V, 50 Hz (460 V, 60 Hz)	Output current at 2 kHz	**Derating factor** at pulse frequency				
6SL3315-... 6SL3325-...	kW (hp)	A	2.5 kHz	4 kHz	5 kHz	7.5 kHz	8 kHz
380 ... 480 V 3 AC							
1TE32-1AA3	110 (150)	210	95 %	82 %	74 %	54 %	50 %
1TE32-6AA3	132 (200)	260	95 %	83 %	74 %	54 %	50 %
1TE33-1AA3	160 (250)	310	97 %	88 %	78 %	54 %	50 %
1TE35-0AA3	250 (400)	490	94 %	78 %	71 %	53 %	50 %
1TE41-4AS3 [1]	800 (1000)	1330	88 %	55 %	–	–	–

Derating factor of the output current as a function of the pulse frequency for units with a rated pulse frequency of 1.25 kHz

Motor Module	Type rating at 400 V, 50 Hz (460 V, 60 Hz) or 690 V, 50 Hz (575 V, 60 Hz)	Output current at 1.25 kHz	**Derating factor** at pulse frequency				
6SL3325-...	kW (hp)	A	2 kHz	2.5 kHz	4 kHz	5 kHz	7.5 kHz
380 ... 480 V 3 AC							
1TE36-1AA3	315 (500)	605	83 %	72 %	64 %	60 %	40 %
1TE37-5AA3	400 (600)	745	83 %	72 %	64 %	60 %	40 %
1TE38-4AA3	450 (700)	840	87 %	79 %	64 %	60 %	40 %
1TE41-0AA3	560 (800)	985	92 %	87 %	70 %	60 %	50 %
1TE41-2AA3	710 (1000)	1260	92 %	87 %	70 %	60 %	50 %
1TE41-4AA3	800 (1150)	1405	97 %	95 %	74 %	60 %	50 %
500 ... 690 V 3 AC							
1TG31-0AA3	90 (75)	100	92 %	88 %	71 %	60 %	40 %
1TG31-5AA3	132 (150)	150	90 %	84 %	66 %	55 %	35 %
1TG32-2AA3	200 (200)	215	92 %	87 %	70 %	60 %	40 %
1TG33-3AA3	315 (300)	330	89 %	82 %	65 %	55 %	40 %
1TG34-7AA3	450 (450)	465	92 %	87 %	67 %	55 %	35 %
1TG35-8AA3	560 (600)	575	91 %	85 %	64 %	50 %	35 %
1TG37-4AA3	710 (700)	735	84 %	74 %	53 %	40 %	25 %
1TG38-0AA3 [2]	800 (800)	810	82 %	71 %	52 %	40 %	25 %
1TG38-1AA3	800 (800)	810	97 %	95 %	71 %	55 %	35 %
1TG41-0AA3	1000 (1000)	1025	91 %	86 %	64 %	50 %	30 %
1TG41-3AA3	1200 (1250)	1270	87 %	79 %	55 %	40 %	25 %
1TG41-6AA3	1500 (1500)	1560	87 %	79 %	55 %	40 %	25 %

The following tables list the maximum achievable output frequency as a function of the pulse frequency.

Maximum output frequencies achieved by increasing the pulse frequency in Vector mode

Pulse frequency	**Max. achievable output frequency**
1.25 kHz	100 Hz
2 kHz	160 Hz
2.5 kHz	200 Hz
4 kHz	320 Hz
5 kHz	400 Hz

Maximum output frequencies achieved by increasing the pulse frequency in Servo mode

Pulse frequency	**Max. achievable output frequency**
2 kHz	300 Hz
4 kHz	300/550 Hz [3]

[1] This Motor Module has been specifically designed for loads demanding a high dynamic performance. The derating factor k_{IGBT} and the derating characteristics can be ignored (see section "Duty cycles" in the SINAMICS Low Voltage Engineering Manual).

[2] The Motor Module 6SL3325-1TG38-0AA3 is optimized for low overload; with an increased pulse frequency, the derating factor is higher than for the Motor Module 6SL3325-1TG38-1AA3.

[3] Higher frequencies on request. For further information see https://support.industry.siemens.com/cs/document/104020669

© Siemens AG 2017

Characteristic curves (continued)

Overload capability

Liquid-cooled SINAMICS S120 units have an overload reserve, e.g. to handle breakaway torques. If larger surge loads occur, this must be taken into account in the configuration. For drives with overload requirements, the appropriate base load current must, therefore, be used as a basis for the required load.

The permissible overload levels are valid under the prerequisite that the drive units are operated with their base-load current before and after the overload condition based on a duty cycle duration of 300 s.

For temporary, periodic duty cycles with high variations of load within the duty cycle, the relevant sections of the SINAMICS Low Voltage Engineering Manual must be observed.

Power Modules and Motor Modules

The base-load current for a low overload I_L is the basis for a duty cycle of 110 % for 60 s or 150 % for 10 s.

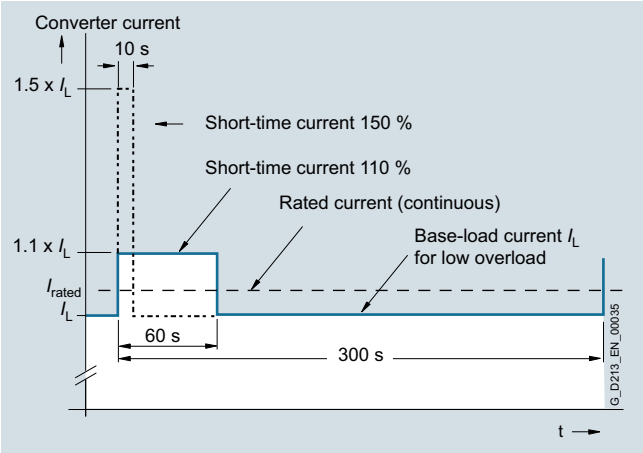

Low overload

The base-load current I_H for a high overload is based on a duty cycle of 150 % for 60 s or 160 % for 10 s.

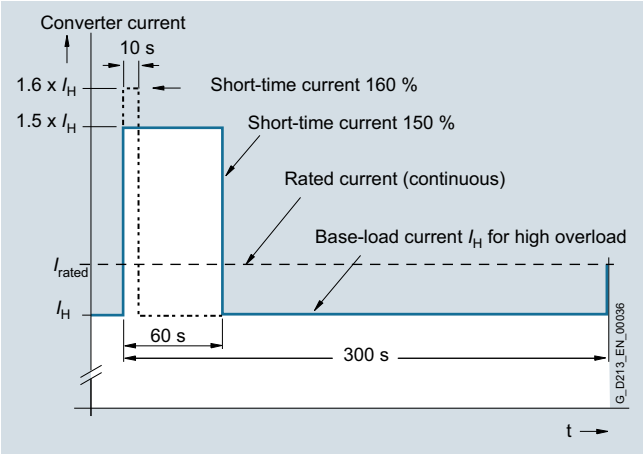

High overload

Line Modules

The base-load current for a high overload $I_{H\,DC}$ is the basis for a duty cycle of 150 % for 60 s or $I_{max\,DC}$ for 5 s.

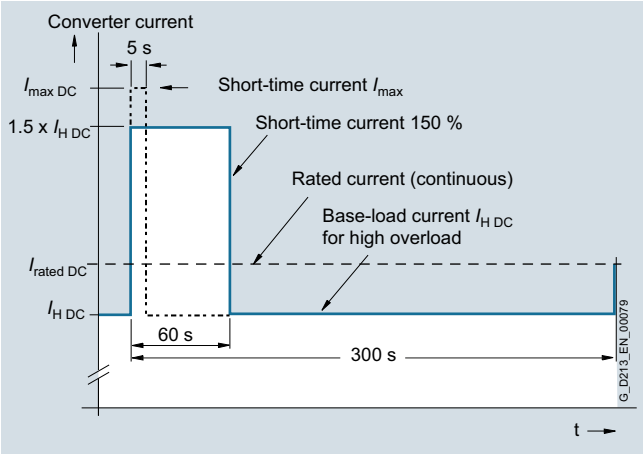

High overload

© Siemens AG 2017

Overview

The Power Module comprises a line rectifier, a DC link and an inverter to supply the motor.

Power Modules are designed for drives that are not capable of regenerating energy to the mains supply. If the motor produces energy during braking, a Braking Module with braking resistors will be required.

Liquid-cooled Power Modules are especially suitable for applications where installation space is restricted and environmental conditions are harsh. Liquid cooling ensures efficient heat dissipation.

Power Modules in the chassis format can be connected to grounded TN/TT systems and non-grounded IT systems.

Design

The liquid-cooled Power Modules have the following interfaces as standard:

- 1 line supply connection
- 1 motor connection
- 1 connection for the 24 V DC electronics power supply
- 1 DC link connection
- 3 DRIVE-CLiQ sockets
- 1 temperature sensor input for KTY84-130, Pt1000, PTC or Pt100 (Pt1000 can be used from firmware V4.7 HF17)
- 1 connection for Safe Brake Adapter
- 1 connection for Safety Integrated
- 2 PE connections
- 2 coolant connections

The CU310-2 Control Unit can be integrated into the liquid-cooled Power Modules.

The status of the Power Modules is indicated via three LEDs.

The scope of supply of the Power Modules includes:

- 1 DRIVE-CLiQ cable for connection to the Control Unit
- 2 seals for coolant connections
- 1 set of warning labels in 30 languages (BG, CN, CZ, DE, DK, EE, ES, FI, FR, GB, GR, HU, IE, IS, IT, JP, KR, LT, LV, MT, NL, NO, PL, PT, RO, RU, SE, SI, SK, TR)

Selection and ordering data

Type rating at 400 V, 50 Hz (460 V, 60 Hz) kW (hp)	Rated output current A	**Power Module** Article No.
Line voltage 380 ... 480 V 3 AC		
110 (150)	210	**6SL3315-1TE32-1AA3**
132 (200)	260	**6SL3315-1TE32-6AA3**
160 (250)	310	**6SL3315-1TE33-1AA3**
250 (400)	490	**6SL3315-1TE35-0AA3**

Description	Article No.
Accessories	
3-way valve [1]	**VXF41.../VXG41...**
Actuator for 3-way valve [1]	
• 230 V 1 AC	**SAX31...**
• 24 V AC/DC	**SAX61.../SAX81...**
Accessories	
Dust protection blanking plugs (50 units) For DRIVE-CLiQ port	**6SL3066-4CA00-0AA0**

[1] Recommended components for installing a flow control as condensation protection; manufactured by Siemens Building Technologies.

© Siemens AG 2017

Integration

The Power Modules communicate with the higher-level control module via DRIVE-CLiQ. The Control Unit in this case could be a CU310-2, CU320-2 or a SIMOTION D Control Unit. An external 24 V DC power supply is required to operate liquid-cooled Power Modules.

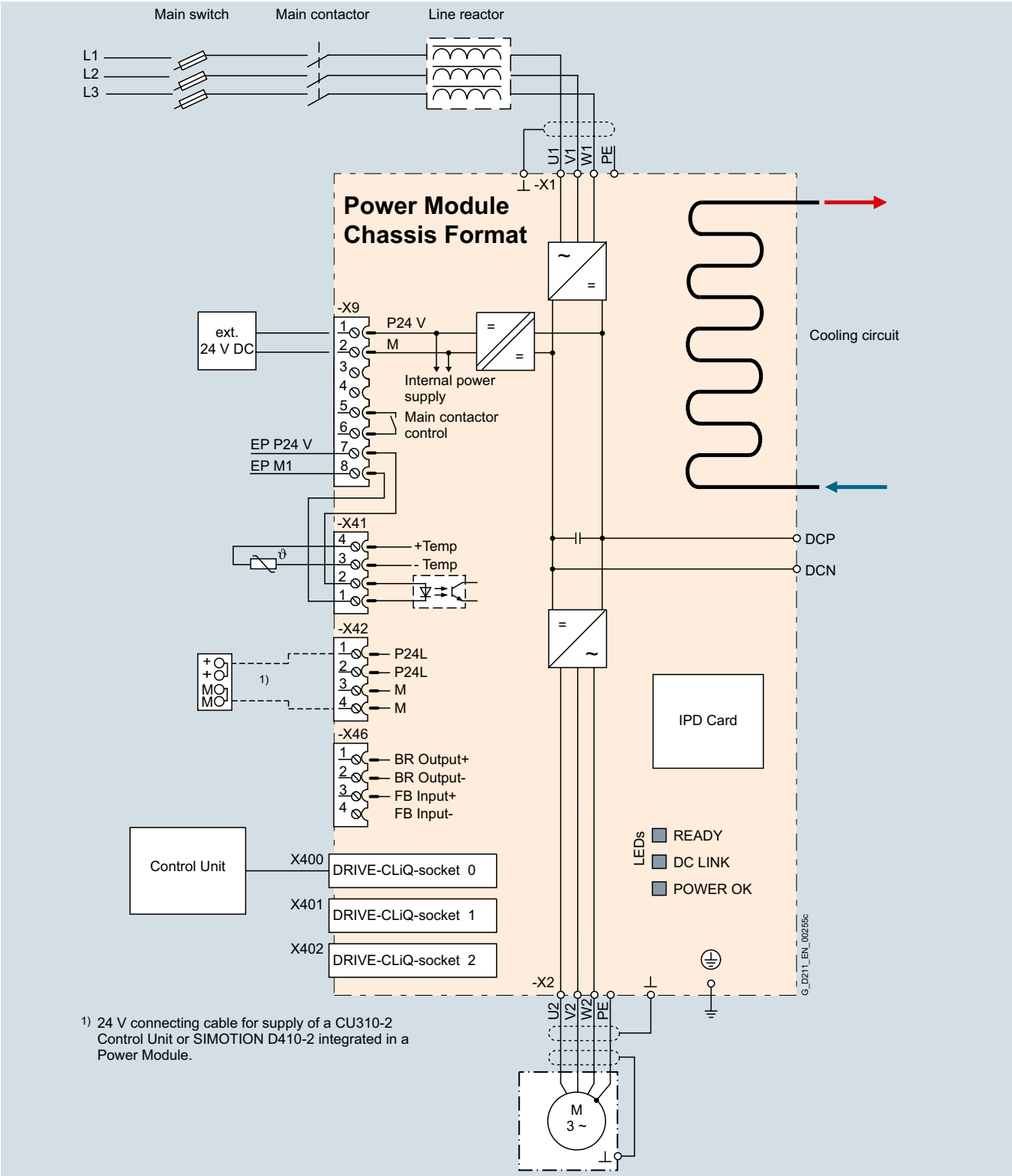

Connection example of a liquid-cooled Power Module in the chassis format

Note:

The integrated 24 V power supply at connector X42 can have a maximum load of 2 A. When the Control Unit is supplied from the integrated power supply, the total load of the digital outputs must be carefully observed to ensure that the 2 A is not exceeded.

© Siemens AG 2017

Technical specifications

General technical specifications

Electrical specifications	
Line connection voltage Up to 2000 m (6562 ft) above sea level	380 … 480 V 3 AC ±10 % (-15 % < 1 min)
Line power factor for a 3 AC line supply voltage and rated output	
• Basic fundamental (cos φ_1)	>0.96
• Total (λ)	0.75 ... 0.93
Efficiency	> 98 %
DC link voltage, approx.	1.35 × line voltage
Output voltage, approx.	0 ... 0.97 × U_{line}
Output frequency [1]	
• Control mode Servo	0 ... 550 Hz
• Control mode Vector	0 ... 550 Hz
• Control mode V/f	0 ... 550 Hz
Electronics power supply	24 V DC -15 %/+20 %
Main contactor control	
• Terminal block -X9/5-6	240 V AC, max. 8 A 30 V DC, max. 1 A
Safety Integrated	Safety Integrity Level 2 (SIL2) acc. to IEC 61508, Performance Level d (PLd) acc. to EN ISO 13849-1 and Control Category 3 acc. to EN ISO 13849-1.

[1] Please note:
- The correlation between the maximum output frequency, pulse frequency and current derating. Higher output frequencies on request
  For further information see
  https://support.industry.siemens.com/cs/document/104020669
- The correlation between the minimum output frequency and permissible output current (current derating).
  Information is provided in the SINAMICS Low Voltage Engineering Manual.

© Siemens AG 2017

Technical specifications (continued)

Line voltage 380 V ... 480 V 3 AC		Power Modules			
		6SL3315-1TE32-1AA3	6SL3315-1TE32-6AA3	6SL3315-1TE33-1AA3	6SL3315-1TE35-0AA3
Type rating					
• At I_L (50 Hz 400 V) [1]	kW	**110**	**132**	**160**	**250**
• At I_H (50 Hz 400 V) [1]	kW	90	110	132	200
• At I_L (60 Hz 460 V) [2]	hp	150	200	250	400
• At I_H (60 Hz 460 V) [2]	hp	150	200	200	350
Output current					
• Rated current $I_{rated\ O}$	A	210	260	310	490
• Base-load current I_L [3]	A	205	250	302	477
• Base-load current I_H [4]	A	178	233	277	438
• Max. output current $I_{max\ O}$	A	307	375	453	715
Input current					
• Rated current $I_{rated\ I}$	A	230	285	340	540
• Maximum current $I_{max\ I}$	A	336	411	496	788
Current demand					
• 24 V DC auxiliary power supply	A	1.4	1.4	1.5	1.5
Pulse frequency [5]					
• Rated frequency	kHz	2	2	2	2
• Pulse frequency, max.					
- Without current derating	kHz	2	2	2	2
- With current derating	kHz	8	8	8	8
Power loss, at 50 Hz 400 V [6]					
• Dissipated to coolant	kW	2.36	2.97	3.31	5.29
• Dissipated to ambient air	kW	0.06	0.07	0.09	0.14
• Total	kW	2.42	3.04	3.4	5.43
Coolant volume flow [7]	l/min	9	9	12	12
Liquid volume of the integrated heat exchanger	dm^3	0.52	0.52	0.88	0.88
Pressure drop, typ. [8] for volume flow	Pa	70000	70000	70000	70000
Heat exchanger material		Stainless steel	Stainless steel	Stainless steel	Stainless steel
Sound pressure level L_{pA} (1 m) at 50/60 Hz	dB	52	52	52	52
Line connection U1, V1, W1		Hole for M12	Hole for M12	Hole for M12	Hole for M12
• Conductor cross section, max. (IEC)	mm^2	2 × 95	2 × 95	2 × 240	2 × 240
DC link connection DCP, DCN		Hole for M12	Hole for M12	Hole for M12	Hole for M12
• Conductor cross section, max. (IEC)	mm^2	2 × 95	2 × 95	2 × 240	2 × 240
Motor connection U2/T1, V2/T2, W2/T3		Hole for M12	Hole for M12	2 × hole for M12	2 × hole for M12
• Conductor cross section, max. (IEC)	mm^2	2 × 95	2 × 95	2 × 240	2 × 240
Cable length, max. [9]					
• Shielded	m (ft)	300 (984)	300 (984)	300 (984)	300 (984)
• Unshielded	m (ft)	450 (1476)	450 (1476)	450 (1476)	450 (1476)
PE/GND connection		2 × hole for M12	2 × hole for M12	2 × hole for M12	2 × hole for M12
• Conductor cross section, max. (IEC)	mm^2	2 × 95	2 × 95	2 × 240	2 × 240
Dimensions					
• Width	mm (in)	265 (10.4)	265 (10.4)	265 (10.4)	265 (10.4)
• Height	mm (in)	836 (32.9)	836 (32.9)	983 (38.7)	983 (38.7)
• Depth	mm (in)	549 (21.6)	549 (21.6)	549 (21.6)	549 (21.6)
Weight, approx.	kg (lb)	77 (170)	77 (170)	108 (238)	108 (238)
Frame size		FL	FL	GL	GL
Minimum short-circuit current [10]	A	3000	3600	4400	8000

1) Rated output of a typical 6-pole standard induction motor based on I_L or I_H for 3 AC 50 Hz 400 V.

2) Rated output of a typical 6-pole standard induction motor based on I_L or I_H for 3 AC 60 Hz 460 V.

3) The base-load current I_L is based on a duty cycle of 110 % for 60 s or 150 % for 10 s with a duty cycle duration of 300 s.

4) The base-load current I_H is based on a duty cycle of 150 % for 60 s or 160 % for 10 s with a duty cycle duration of 300 s.

5) Information regarding the correlation between the pulse frequency and maximum output current/output frequency is provided in the SINAMICS Low Voltage Engineering Manual.

6) The specified power loss represents the maximum value at 100 % utilization. The value is lower under normal operating conditions. To ensure safe dissipation of the minor power loss released to the ambient air, it is important to follow the instructions pertaining to control cabinet installation in the SINAMICS Low Voltage Engineering Manual.

7) The value applies to coolants comprising water and a mixture of water and anti-freeze agent.

8) The value is valid for water as coolant. Additional information and notes on other coolants is provided in the SINAMICS Low Voltage Engineering Manual.

9) Longer cable lengths for specific configurations are available on request. For additional information, please refer to the SINAMICS Low Voltage Engineering Manual.

10) Current required for reliably triggering protective devices.

© Siemens AG 2017

Overview

The self-commutated infeed/regenerative feedback units (with IGBTs in infeed and regenerative feedback directions) generate a regulated DC link voltage. This means that the connected Motor Modules are decoupled from the line voltage. Line voltage fluctuations within the permissible supply tolerances have no effect on the motor voltage.

If required, the Active Line Modules can also provide reactive power compensation.

Active Line Modules are designed for connection to grounded TN/TT and non-grounded IT supply systems.

Liquid-cooled Active Line Modules are especially suitable for applications where installation space is restricted and environmental conditions are harsh. Liquid cooling ensures efficient heat dissipation.

Active Line Modules are always operated together with the associated Active Interface Modules. These include the necessary pre-charging circuit as well as a Clean Power Filter.

Design

The liquid-cooled Active Line Modules have the following interfaces as standard:

- 1 line supply connection
- 1 connection for the 24 V DC electronics power supply
- 1 DC link connection (DCP, DCN) for supplying the connected Motor Modules
- 3 DRIVE-CLiQ sockets
- 1 temperature sensor input for KTY84-130, Pt1000, PTC or Pt100 (Pt1000 can be used from firmware V4.7 HF17)
- 1 PE connection
- 2 coolant connections

The status of the Active Line Modules is indicated via three LEDs.

The following are included in the scope of supply of the Active Line Modules:

- 1 DRIVE-CLiQ cable for connection to the Control Unit
- 2 seals for coolant connections
- 1 set of warning labels in 30 languages (BG, CN, CZ, DE, DK, EE, ES, FI, FR, GB, GR, HU, IE, IS, IT, JP, KR, LT, LV, MT, NL, NO, PL, PT, RO, RU, SE, SI, SK, TR)

Selection and ordering data

Rated power at 400 V, 50 Hz (460 V, 60 Hz) or 690 V, 50 Hz (575 V, 60 Hz) kW (hp)	Rated infeed/ regenerative feedback current A	**Active Line Module** Article No.
Line voltage 380 ... 480 V 3 AC		
300 (500)	490	**6SL3335-7TE35-0AA3**
380 (600)	605	**6SL3335-7TE36-1AA3**
500 (700)	840	**6SL3335-7TE38-4AA3**
630 (900)	985	**6SL3335-7TE41-0AA3**
900 (1250)	1405	**6SL3335-7TE41-4AA3**
Line voltage 500 ... 690 V 3 AC		
630 (675)	575	**6SL3335-7TG35-8AA3**
800 (900)	735	**6SL3335-7TG37-4AA3**
900 (975)	810	**6SL3335-7TG38-1AA3**
1100 (1250)	1020	**6SL3335-7TG41-0AA3**
1400 (1500)	1270	**6SL3335-7TG41-3AA3**
1700 (1880)	1560	**6SL3335-7TG41-6AA3**

Description	Article No.
Accessories	
3-way valve [1]	**VXF41.../VXG41...**
Actuator for 3-way valve [1]	
• 230 V 1 AC	**SAX31...**
• 24 V AC/DC	**SAX61.../SAX81...**
Accessories	
Dust protection blanking plugs (50 units) For DRIVE-CLiQ port	**6SL3066-4CA00-0AA0**

[1] Recommended components for installing a flow control as condensation protection; manufactured by Siemens Building Technologies.

© Siemens AG 2017

Integration

Active Line Modules are always operated together with the associated Active Interface Modules. Active Interface Modules contain a Clean Power Filter with basic RI suppression, the pre-charging circuit for the Active Line Module, line supply voltage sensing circuit and monitoring sensors.

The liquid-cooled Active Line Modules communicate with the higher-level control module via DRIVE-CLiQ. The control module in this case can be a CU320-2 or a SIMOTION D Control Unit. An external 24 V DC power supply is required to operate the Active Line Modules.

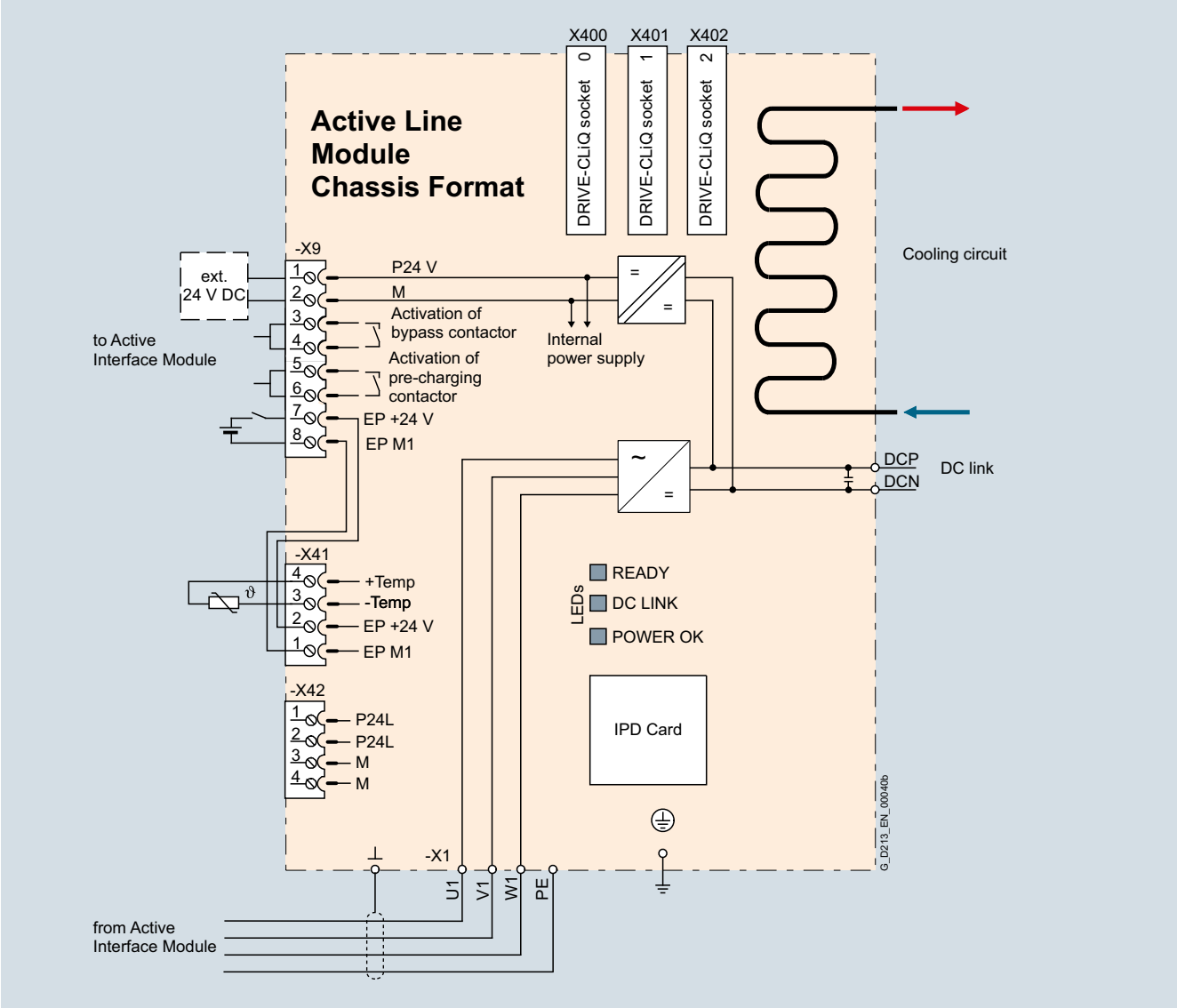

Connection example of an Active Line Module

Technical specifications

General technical specifications

Electrical specifications	
Line power factor	
• Basic fundamental (cos φ_1)	1 (factory setting), can be altered by inputting a reactive current setpoint
• Total (λ)	1 (factory setting)
Efficiency	>98.5 % (Active Line Modules) >99 % (Active Interface Module)
DC link voltage, approx.	The DC link voltage is regulated and can be adjusted as a voltage decoupled from the line voltage. Factory setting of the DC link voltage: 1.5 × line voltage

© Siemens AG 2017

Technical specifications (continued)

Line voltage 380 V ... 480 V 3 AC		Active Line Modules				
		6SL3335-7TE35-0AA3	6SL3335-7TE36-1AA3	6SL3335-7TE38-4AA3	6SL3335-7TE41-0AA3	6SL3335-7TE41-4AA3
Rated power						
• At $I_{rated\ DC}$ (50 Hz 400 V)	kW	**300**	**380**	**500**	**630**	**900**
• At $I_{H\ DC}$ (50 Hz 400 V)	kW	270	335	465	545	780
• At $I_{rated\ DC}$ (60 Hz 460 V)	hp	500	600	700	900	1250
• At $I_{H\ DC}$ (60 Hz 460 V)	hp	400	500	700	800	1000
DC link current						
• Rated current $I_{rated\ DC}$	A	549	677	941	1100	1573
• Base-load current $I_{H\ DC}$ [1]	A	489	603	837	982	1401
• Maximum current $I_{max\ DC}$	A	823	1017	1410	1654	2361
Infeed/regenerative feedback current						
• Rated current $I_{rated\ I}$	A	490	605	840	985	1405
• Maximum current $I_{max\ I}$	A	735	907	1260	1477	2055
Current demand						
• 24 V DC auxiliary power supply	A	1.5	1.6	1.6	1.6	1.6
DC link capacitance						
• Active Line Module	µF	9600	12600	17400	18900	28800
Pulse frequency	kHz	4	2.5	2.5	2.5	2.5
Power loss, at 50 Hz 400 V [2]						
• Dissipated to coolant	kW	3.42	4.65	5.52	7.46	9.58
• Dissipated to ambient air	kW	0.14	0.17	0.23	0.44	0.62
• Total	kW	3.56	4.82	5.75	7.9	10.2
Coolant volume flow [3]	l/min	12	16	16	27	27
Liquid volume of the integrated heat exchanger	dm^3	0.91	0.74	0.74	1.56	1.56
Pressure drop, typ. [4] for volume flow	Pa	70000	70000	70000	70000	70000
Heat exchanger material		Stainless steel	Aluminum	Aluminum	Aluminum	Aluminum
Sound pressure level L_{pA} [5] (1 m) at 50/60 Hz	dB	69/73	70/73	70/73	71/73	71/73
Line connection U1, V1, W1		Hole for M12	2 x hole for M12	2 x hole for M12	2 x hole for M12	2 x hole for M12
• Conductor cross section, max. (IEC)	mm^2	2 × 240	4 × 185	4 × 185	Busbar	Busbar
DC link connection DCP, DCN		2 × hole for M12 Busbar	2 × hole for M12 Busbar	2 × hole for M12 Busbar	2 × hole for M12 Busbar	2 × hole for M12 Busbar
PE/GND connection		2 × hole for M12	2 × hole for M12	2 × hole for M12	2 × hole for M12	2 × hole for M12
• Conductor cross section, max. (IEC)	mm^2	2 × 240	4 × 185	4 × 185	4 × 240	4 × 240
Cable length, max. [6]						
• Shielded	m (ft)	2700 (8859)	3900 (12796)	3900 (12796)	3900 (12796)	3900 (12796)
• Unshielded	m (ft)	4050 (13288)	5850 (1168)	5850 (1168)	5850 (1168)	5850 (1168)
Dimensions						
• Width	mm (in)	150 (5.91)	265 (10.4)	265 (10.4)	295 (11.6)	295 (11.6)
• Height	mm (in)	1172 (46.1)	1002 (39.4)	1002 (39.4)	1516 (59.7)	1516 (59.7)
• Depth	mm (in)	545 (21.5)	545 (21.5)	545 (21.5)	545 (21.5)	545 (21.5)
Weight, approx.	kg (lb)	80 (176)	110 (243)	110 (243)	220 (486)	220 (486)
Frame size		GXL	HXL	HXL	JXL	JXL
Minimum short-circuit current [7]	A	8000	9200	10400	16000	21000

1) The base-load current $I_{H\ DC}$ is the basis for a duty cycle of 150 % for 60 s or $I_{max\ DC}$ for 5 s with a duty cycle duration of 300 s.

2) The specified power loss represents the maximum value at 100 % utilization. The value is lower under normal operating conditions. To ensure safe dissipation of the minor power loss released to the ambient air, it is important to follow the instructions pertaining to control cabinet installation in the SINAMICS Low Voltage Engineering Manual.

3) The value applies to coolants comprising water and a mixture of water and anti-freeze agent.

4) The value is valid for water as coolant. Additional information and notes on other coolants is provided in the SINAMICS Low Voltage Engineering Manual.

5) Total sound pressure level of Active Interface Module and Active Line Module.

6) Total of all motor cables and DC link. Longer cable lengths for specific configurations are available on request. For additional information, please refer to the SINAMICS Low Voltage Engineering Manual.

7) Current required for reliably triggering protective devices.

© Siemens AG 2017

Technical specifications (continued)

Line voltage 500 ... 690 V 3 AC		Active Line Modules					
		6SL3335-7TG35-8AA3	6SL3335-7TG37-4AA3	6SL3335-7TG38-1AA3	6SL3335-7TG41-0AA3	6SL3335-7TG41-3AA3	6SL3335-7TG41-6AA3
Rated power							
• At $I_{rated\ DC}$ (50 Hz 690 V)	kW	**630**	**800**	**900**	**1100**	**1400**	**1700**
• At $I_{H\ DC}$ (50 Hz 690 V)	kW	620	705	670	1000	1215	1490
• At $I_{rated\ DC}$ (50 Hz 500 V)	kW	447	560	620	780	965	1180
• At $I_{H\ DC}$ (50 Hz 500 V)	kW	450	510	485	710	880	1080
• At $I_{rated\ DC}$ (60 Hz 575 V)	hp	675	900	975	1250	1500	1880
• At $I_{H\ DC}$ (60 Hz 575 V)	hp	506	600	765	1000	1250	1530
DC link current							
• Rated current $I_{rated\ DC}$	A	644	823	907	1147	1422	1740
• Base-load current $I_{H\ DC}$ [1]	A	573	732	808	1022	1266	1550
• Maximum current $I_{max\ DC}$	A	966	1235	1360	1722	2133	2620
Infeed/regenerative feedback current							
• Rated current $I_{rated\ I}$	A	575	735	810	1025	1270	1560
• Maximum current $I_{max\ I}$	A	862	1100	1214	1537	1905	2055
Current demand							
• 24 V DC auxiliary power supply	A	1.6	1.6	1.6	1.6	1.46	1.5
DC link capacitance							
• Active Line Module	µF	9670	10500	10500	19330	19330	21000
Pulse frequency	kHz	2.5	2.5	2.5	2.5	2.5	2.5
Power loss, at 50 Hz 690 V [2]							
• Dissipated to coolant	kW	5.45	7.45	8.28	10.37	12.98	17.17
• Dissipated to ambient air	kW	0.16	0.2	0.22	0.53	0.57	0.79
• Total	kW	5.61	7.65	8.5	10.9	13.55	17.96
Coolant volume flow [3]	l/min	16	16	16	27	27	27
Liquid volume of the integrated heat exchanger	dm^3	0.74	0.74	0.74	1.56	1.56	1.56
Pressure drop, typ. [4] for volume flow	Pa	70000	70000	70000	70000	70000	70000
Heat exchanger material		Aluminum	Aluminum	Aluminum	Aluminum	Aluminum	Aluminum
Sound pressure level L_{pA} [5] (1 m) at 50/60 Hz	dB	70/73	71/73	71/73	71/73	71/73	71/73
Line connection U1, V1, W1		2 × hole for M12	2 × hole for M12	2 × hole for M12	2 × hole for M12	2 × hole for M12	2 × hole for M12
• Conductor cross section, max. (IEC)	mm^2	4 × 185	4 × 185	4 × 185	Busbar	Busbar	Busbar
DC link connection DCP, DCN		2 × hole for M12 Busbar	2 × hole for M12 Busbar	2 × hole for M12 Busbar	2 × hole for M12 Busbar	2 × hole for M12 Busbar	2 × hole for M12 Busbar
PE/GND connection		2 × hole for M12	2 × hole for M12	2 × hole for M12	2 × hole for M12	2 × hole for M12	2 × hole for M12
• Conductor cross section, max. (IEC)	mm^2	4 × 185	4 × 185	4 × 185	Busbar	Busbar	Busbar
Cable length, max. [6]							
• Shielded	m (ft)	2250 (7382)	2250 (7382)	2250 (7382)	2250 (7382)	2250 (7382)	2250 (7382)
• Unshielded	m (ft)	3375 (11073)	3375 (11073)	3375 (11073)	3375 (11073)	3375 (11073)	3375 (11073)
Dimensions							
• Width	mm (in)	265 (10.4)	265 (10.4)	265 (10.4)	295 (11.6)	295 (11.6)	295 (11.6)
• Height	mm (in)	1002 (39.4)	1002 (39.4)	1002 (39.4)	1516 (59.7)	1516 (59.7)	1516 (59.7)
• Depth	mm (in)	545 (21.5)	545 (21.5)	545 (21.5)	545 (21.5)	545 (21.5)	545 (21.5)
Weight, approx.	kg (lb)	110 (243)	110 (243)	110 (243)	220 (486)	220 (486)	230 (507)
Frame size		HXL	HXL	HXL	JXL	JXL	JXL
Minimum short-circuit current [7]	A	8400	10500	12600	16000	20000	24000

1) The base-load current $I_{H\ DC}$ is the basis for a duty cycle of 150 % for 60 s or $I_{max\ DC}$ for 5 s with a duty cycle duration of 300 s.

2) The specified power loss represents the maximum value at 100 % utilization. The value is lower under normal operating conditions. To ensure safe dissipation of the minor power loss released to the ambient air, it is important to follow the instructions pertaining to control cabinet installation in the SINAMICS Low Voltage Engineering Manual.

3) The value applies to coolants comprising water and a mixture of water and anti-freeze agent.

4) The value is valid for water as coolant. Additional information and notes on other coolants is provided in the SINAMICS Low Voltage Engineering Manual.

5) Total sound pressure level of Active Interface Module and Active Line Module.

6) Total of all motor cables and DC link. Longer cable lengths for specific configurations are available on request. For additional information, please refer to the SINAMICS Low Voltage Engineering Manual.

7) Current required for reliably triggering protective devices.

© Siemens AG 2017

Overview

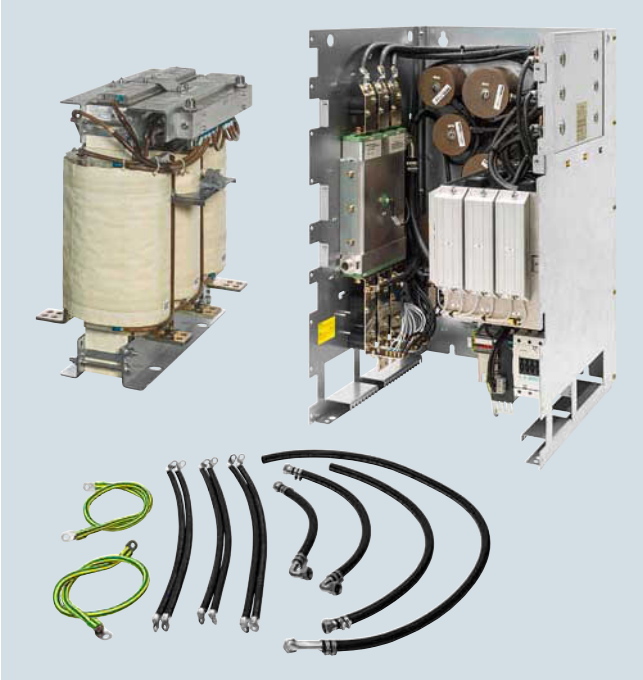

The Active Interface Module essentially comprises a liquid-cooled filter reactor and a liquid-cooled filter module. The filter module contains a Clean Power Filter with basic RI suppression, the pre-charging circuit for the Active Line Module, the line voltage sensing circuit and monitoring sensors.

A bypass contactor is provided separately. Active Interface Modules are used in conjunction with Active Line Modules.

Liquid-cooled Active Interface Modules cannot be supplied for all liquid-cooled Active Line Modules. Where they are not available, air-cooled Active Interface Modules can be ordered instead.

Design

Active Interface Modules have the following interfaces as standard:

- 1 line supply connection
- 1 load connection
- 1 connection for the 24 V DC electronics power supply
- 1 connection for the external 230 V AC supply
- 1 DRIVE-CLiQ socket (on VSM10 Voltage Sensing Module)
- 1 connection for pre-charging circuit
- 1 PE connection
- 2 coolant connections

The scope of supply of the Active Interface Modules includes:

- Liquid-cooled filter reactor
- Liquid-cooled filter module
- Connection kit (cables and hoses)
- DRIVE-CLiQ cable for the connection between Active Interface Module and Active Line Module
- 2 seals for coolant connections
- 1 set of warning labels in 30 languages (BG, CN, CZ, DE, DK, EE, ES, FI, FR, GB, GR, HU, IE, IS, IT, JP, KR, LT, LV, MT, NL, NO, PL, PT, RO, RU, SE, SI, SK, TR)

Selection and ordering data

Suitable for Active Line Module chassis format, liquid-cooled	Rated power of the Active Line Modules at 400 V, 50 Hz (460 V, 60 Hz) or 690 V, 50 Hz (575 V, 60 Hz) kW (hp)	**Active Interface Module, liquid-cooled** Article No.	**Active Interface Module, air-cooled** Article No.
Line voltage 380 ... 480 V 3 AC			
6SL3335-7TE35-0AA3	300 (500)	_ [1]	**6SL3300-7TE35-0AA0**
6SL3335-7TE36-1AA3	380 (600)	_ [1]	**6SL3300-7TE38-4AA0**
6SL3335-7TE38-4AA3	500 (700)	_ [1]	**6SL3300-7TE38-4AA0**
6SL3335-7TE41-0AA3	630 (900)	**6SL3305-7TE41-4AA3**	–
6SL3335-7TE41-4AA3	900 (1250)	**6SL3305-7TE41-4AA3**	–
Line voltage 500 ... 690 V 3 AC			
6SL3335-7TG35-8AA3	630 (675)	_ [1]	**6SL3300-7TG35-8AA0**
6SL3335-7TG37-4AA3	800 (900)	**6SL3305-7TG37-4AA3**	–
6SL3335-7TG38-1AA3	900 (975)	**6SL3305-7TG41-0AA3**	–
6SL3335-7TG41-0AA3	1100 (1250)	**6SL3305-7TG41-0AA3**	–
6SL3335-7TG41-3AA3	1400 (1500)	**6SL3305-7TG41-3AA3**	–
6SL3335-7TG41-6AA3	1700 (1880)	**6SL3305-7TG41-6AA3**	–

[1] For these power ratings, no liquid-cooled Active Interface Modules are available. Air-cooled devices can be alternatively used.
See the right-hand column and additional information in Section, Air-cooled Active Interface Modules.

© Siemens AG 2017

Integration

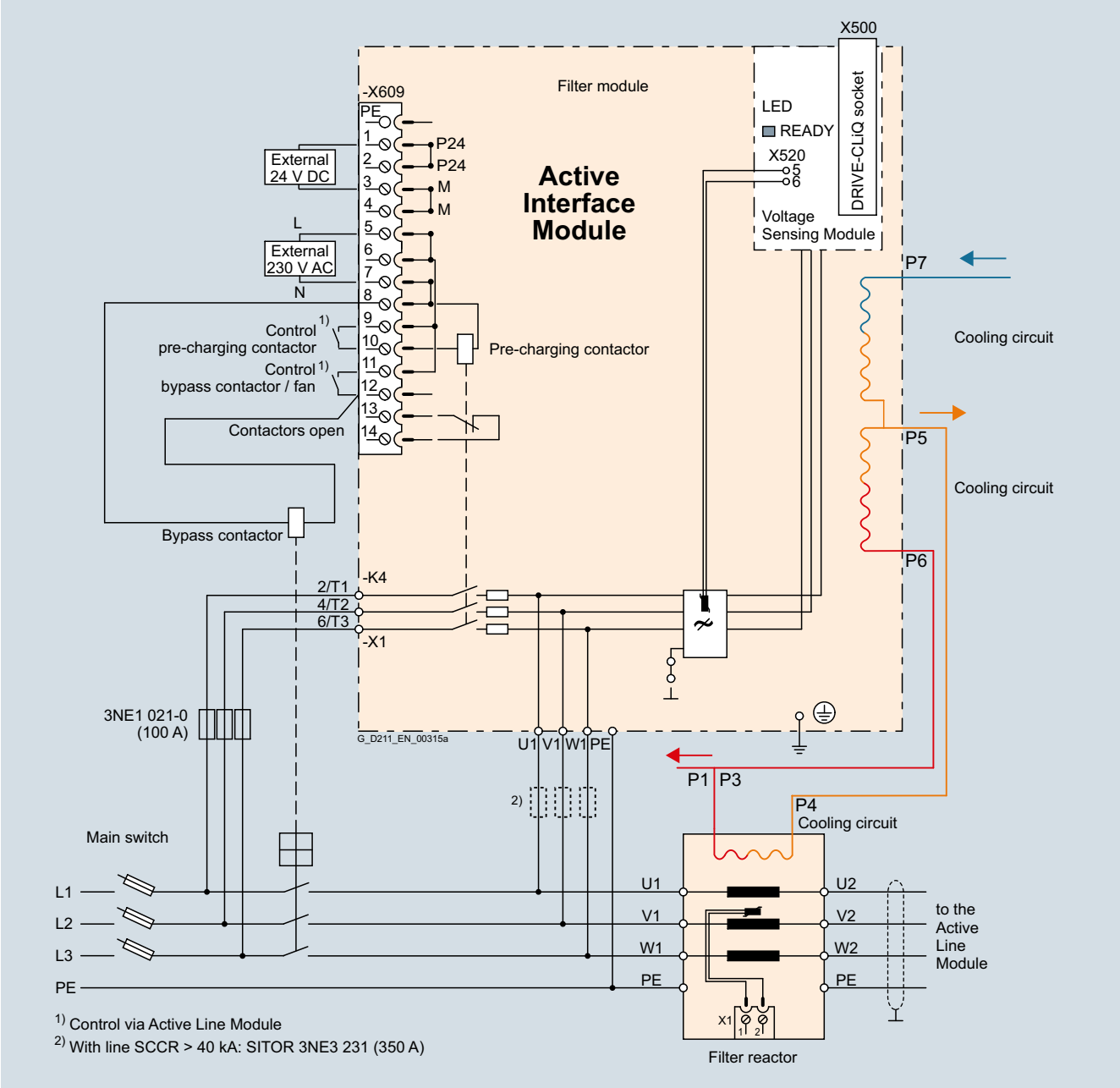

Connection example of liquid-cooled Active Interface Module with external bypass contactor

© Siemens AG 2017

Technical specifications

Line voltage 380 ... 480 V 3 AC		**Active Interface Module** 6SL3305-7TE41-4AA3
Suitable for Active Line Module		
• Rated power at 400 V	kW	**900/630**
- Liquid-cooled		6SL3335-7TE41-4AA3 6SL3335-7TE41-0AA3
Rated current	A	1405
Bypass contactor [1]		3WL1116-2BB34-4AN2-Z Z = C22 [2]
Current demand		
• 24 V DC auxiliary power supply	A	0.17
• 230 V 2 AC		
- Inrush current	A	1.0
- Holding current	A	0.1
DC link capacitance of the drive line-up, max. [3]	µF	230400
Coolant volume flow	l/min	16
Pressure drop, typ. **for volume flow**	Pa	70000
Sound pressure level L_{pA} (1 m) at 50/60 Hz	dB	71/71
Frame size		JIL
Filter reactor		
Power loss [4]		
• At 50 Hz 400 V	kW	8.6
• At 60 Hz 460 V	kW	8.6
• Dissipated to ambient air	kW	0.9
Liquid volume		
• Of integrated reactor cooler	dm^3	0.6
• Of hoses supplied	dm^3/m	0.285
Coolant volume flow	l/min	8
Pressure drop, typ. **for volume flow**	Pa	70000
Heat exchanger material		Aluminum
Line/load connection L1, L2, L3 / U2, V2, W2		Flat connector for M12 screws
PE/GND connection		M10 stud
• Conductor cross section, max. (IEC)	mm^2	1 × 240
Degree of protection		IP00
Dimensions		
• Width	mm (in)	373 (14.7)
• Height	mm (in)	716 (28.2)
• Depth	mm (in)	575 (22.6)
Weight, approx.	kg (lb)	299 (659)
Filter module		
Power loss [4]		
• At 50 Hz 400 V	kW	3.6
• At 60 Hz 460 V	kW	3.6
• Dissipated to ambient air	kW	0.15
Liquid volume	dm^3	1
Heat exchanger material		Aluminum
PE/GND connection		Flat connector for M8 screw
• Conductor cross section, max. (IEC)	mm^2	2 × 120
Degree of protection		IP00
Dimensions		
• Width	mm (in)	511 (20.1)
• Height	mm (in)	840 (33.1)
• Depth	mm (in)	574 (22.6)
Weight, approx.	kg (lb)	110 (243)

[1] The bypass contactor is not included in the scope of supply.

[2] The breakers must always be switched ON and OFF by the sequence control. An interlocking set 3WL9111-0BA21-0AA0 as described in Catalog LV 10 should be provided for the bypass contactor to exclude the risk of unintentional manual operation. Manual operation bypasses the pre-charging circuit and can therefore destroy the Active Line Module.

[3] Information on higher capacities is included in the SINAMICS Low Voltage Engineering Manual.

[4] The specified power loss represents the maximum value at 100 % utilization. The value is lower under normal operating conditions. To ensure safe dissipation of the minor power loss released to the ambient air, it is important to follow the instructions pertaining to control cabinet installation in the SINAMICS Low Voltage Engineering Manual.

© Siemens AG 2017

Technical specifications (continued)

Line voltage 500 ... 690 V 3 AC		Active Interface Modules			
		6SL3305-7TG37-4AA3	6SL3305-7TG41-0AA3	6SL3305-7TG41-3AA3	6SL3305-7TG41-6AA3
Suitable for Active Line Module					
• Rated power at 690 V	kW	**800**	**900/1100**	**1400**	**1700**
- Liquid-cooled		6SL3335-7TG37-4AA3	6SL3335-7TG38-1AA3 6SL3335-7TG41-0AA3	6SL3335-7TG41-3AA3	6SL3335-7TG41-6AA3
Rated current	A	735	1025	1270	1560
Bypass contactor [1]		3RT1476-6AP36 (3 units)	3WL1212-4BB34-4AN2-Z C22 [2]	3WL1216-4BB34-4AN2-Z C22 [2]	3WL1216-4BB34-4AN2-Z C22 [2]
Current demand					
• 24 V DC auxiliary power supply	A	0.17	0.17	0.17	0.17
• 230 V 2 AC					
- Inrush current	A	1.0	1.0	1.0	1.0
- Holding current	A	0.1	0.1	0.1	0.1
DC link capacitance of the drive line-up, max. [3]	µF	153600	153600	153600	210000
Coolant volume flow	l/min	10	16	16	16
Pressure drop, typ. for volume flow	Pa	70000	70000	70000	70000
Sound pressure level L_{pA} (1 m) at 50/60 Hz	dB	71/71	71/71	71/71	71/71
Frame size		JIL	JIL	JIL	JIL
Filter reactor					
Power loss [4]					
• At 50 Hz 690 V	kW	5.5	6.2	9.3	11.0
• At 60 Hz 575 V	kW	5.5	6.2	9.3	11.0
• Dissipated to ambient air	kW	0.5	0.6	0.95	1.15
Liquid volume					
• Of integrated reactor cooler	dm^3	0.6	0.6	0.6	0.6
• Of hoses supplied	dm^3/m	0.285	0.285	0.285	0.285
Coolant volume flow	l/min	10	10	10	8
Pressure drop, typ. for volume flow	Pa	70000	70000	70000	70000
Heat exchanger material		Aluminum	Aluminum	Aluminum	Aluminum
Line/load connection L1, L2, L3 / U2, V2, W2		Flat connector for M12 screws	Flat connector for M12 screws	Flat connector for M12 screws	Flat connector for M12 screws
PE/GND connection		M10 stud	M10 stud	M10 stud	M10 stud
• Conductor cross section, max. (IEC)	mm^2	1 × 240	1 × 240	1 × 240	1 × 240
Degree of protection		IP00	IP00	IP00	IP00
Dimensions					
• Width	mm (in)	358 (14.1)	440 (17.32)	440 (17.32)	440 (17.32)
• Height	mm (in)	680 (26.8)	705 (27.8)	705 (27.8)	705 (27.8)
• Depth	mm (in)	575 (22.6)	575 (22.6)	575 (22.6)	580 (22.8)
Weight, approx.	kg (lb)	324 (714)	365 (805)	365 (805)	460 (1014)
Filter module					
Power loss [4]					
• At 50 Hz 690 V	kW	4.0	5.0	5.0	7.5
• At 60 Hz 575 V	kW	4.0	5.0	5.0	7.5
• Dissipated to ambient air	kW	0.15	0.15	0.15	0.15
Liquid volume	dm^3	1	1	1	1
Heat exchanger material		Aluminum	Aluminum	Aluminum	Aluminum
PE/GND connection		Flat connector for M8 screw	Flat connector for M8 screw	Flat connector for M8 screw	Flat connector for M8 screw
• Conductor cross section, max. (IEC)	mm^2	2 × 120	2 × 120	2 × 120	2 × 120
Degree of protection		IP00	IP00	IP00	IP00
Dimensions					
• Width	mm (in)	511 (20.1)	511 (20.1)	511 (20.1)	511 (20.1)
• Height	mm (in)	840 (33.1)	840 (33.1)	840 (33.1)	840 (33.1)
• Depth	mm (in)	574 (22.6)	574 (22.6)	574 (22.6)	574 (22.6)
Weight, approx.	kg (lb)	110 (243)	110 (243)	110 (243)	110 (243)

1) The bypass contactor is not included in the scope of supply.

2) The breakers must always be switched ON and OFF by the sequence control. An interlocking set 3WL9111-0BA21-0AA0 as described in Catalog LV 10 should be provided for the bypass contactor to exclude the risk of unintentional manual operation. Manual operation bypasses the pre-charging circuit and can therefore destroy the Active Line Module.

3) Information on higher capacities is included in the SINAMICS Low Voltage Engineering Manual.

4) The specified power loss represents the maximum value at 100 % utilization. The value is lower under normal operating conditions. To ensure safe dissipation of the minor power loss released to the ambient air, it is important to follow the instructions pertaining to control cabinet installation in the SINAMICS Low Voltage Engineering Manual.

© Siemens AG 2017

Overview

Basic Line Modules are used for applications where energy is not fed back into the line supply or where energy is exchanged in the DC link between axes operating in the motor and generator modes. The connected Motor Modules are pre-charged via the thyristor gate control. Basic Line Modules are designed for connection to grounded TN/TT and non-grounded IT supply systems.

Liquid-cooled Basic Line Modules are especially suitable for applications where installation space is restricted and environmental conditions are harsh. Liquid cooling ensures efficient heat dissipation.

Design

The liquid-cooled Basic Line Modules have the following interfaces as standard:

- 1 line supply connection
- 1 connection for the 24 V DC electronics power supply
- 1 DC link connection (DCP, DCN) for supplying the connected Motor Modules
- 3 DRIVE-CLiQ sockets
- 1 temperature sensor input for KTY84-130, Pt1000, PTC or Pt100 (Pt1000 can be used from firmware V4.7 HF17)
- 1 PE connection
- 2 coolant connections

The status of the Basic Line Modules is indicated via three LEDs.

The scope of supply of the Power Modules includes:

- 1 DRIVE-CLiQ cable for connection to the Control Unit
- 2 seals for coolant connections
- 1 set of warning labels in 30 languages (BG, CN, CZ, DE, DK, EE, ES, FI, FR, GB, GR, HU, IE, IS, IT, JP, KR, LT, LV, MT, NL, NO, PL, PT, RO, RU, SE, SI, SK, TR)

Selection and ordering data

Rated power at 400 V, 50 Hz (460 V, 60 Hz) or 690 V, 50 Hz (575 V, 60 Hz) kW (hp)	Rated DC link current A	**Basic Line Module** Article No.
Line voltage 380 ... 480 V 3 AC		
360 (555)	740	**6SL3335-1TE37-4AA3**
600 (925)	1220	**6SL3335-1TE41-2AA3**
830 (1280)	1730	**6SL3335-1TE41-7AA3**
Line voltage 500 ... 690 V 3 AC		
355 (395)	420	**6SL3335-1TG34-2AA3**
630 (705)	730	**6SL3335-1TG37-3AA3**
1100 (1230)	1300	**6SL3335-1TG41-3AA3**
1370 (1530)	1650	**6SL3335-1TG41-7AA3**

Description	Article No.
Accessories	
3-way valve [1]	**VXF41.../VXG41...**
Actuator for 3-way valve [1]	
• 230 V 1 AC	**SAX31...**
• 24 V AC/DC	**SAX61.../SAX81...**
Accessories	
Dust protection blanking plugs (50 units) For DRIVE-CLiQ port	**6SL3066-4CA00-0AA0**

[1] Recommended components for installing a flow control as condensation protection; manufactured by Siemens Building Technologies.

© Siemens AG 2017

Integration

The liquid-cooled Basic Line Modules communicate with the higher-level control module via DRIVE-CLiQ. The control module in this case can be a CU320-2 or a SIMOTION D Control Unit. An external 24 V DC power supply is required to operate liquid-cooled Basic Line Modules.

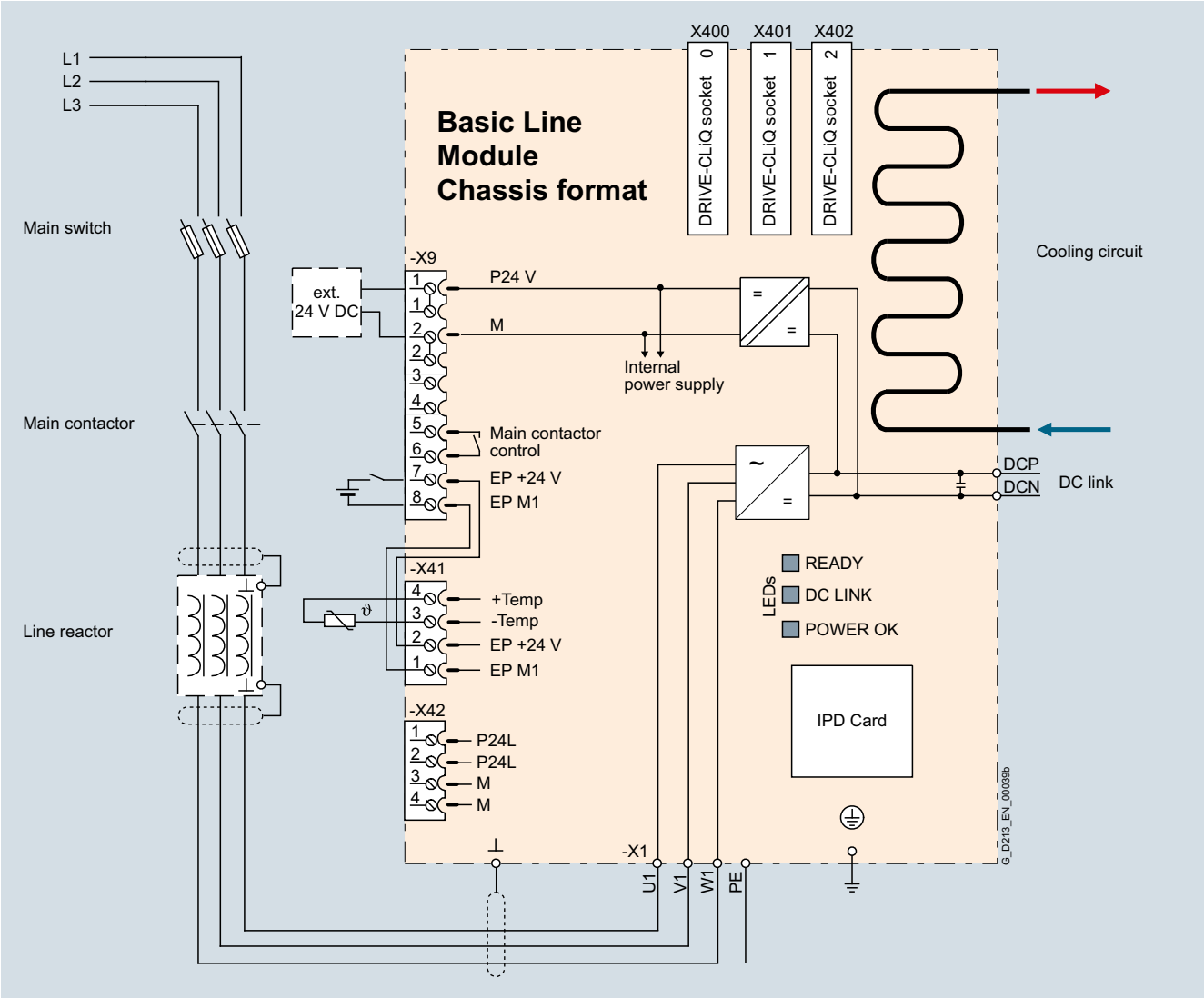

Connection example of a Basic Line Module

Technical specifications

General technical specifications

Electrical specifications	
Line power factor at rated power	
• Basic fundamental (cos φ_1)	>0.96
• Total (λ)	0.75 ... 0.93
Efficiency	>99 %
DC link voltage, approx. [1]	1.35 × line voltage
Main contactor control	
• Terminal block -X9/5-6	240 V AC, max. 8 A 30 V DC, max. 1 A

[1] The DC link voltage is unregulated and load-dependent.
For additional information, please refer to the SINAMICS Low Voltage Engineering Manual.

© Siemens AG 2017

Technical specifications (continued)

Line voltage 380 ... 480 V 3 AC		Basic Line Modules		
		6SL3335-1TE37-4AA3	6SL3335-1TE41-2AA3	6SL3335-1TE41-7AA3
Rated power				
• At $I_{rated\ DC}$ (50 Hz 400 V)	kW	**360**	**600**	**830**
• At I_H (50 Hz 400 V)	kW	280	450	650
• At $I_{rated\ DC}$ (60 Hz 460 V)	hp	555	925	1280
• At I_H (60 Hz 460 V)	hp	430	690	1000
DC link current				
• Rated current $I_{rated\ DC}$	A	740	1220	1730
• Base-load current $I_{H\ DC}$ [1]	A	578	936	1350
• Maximum current $I_{max\ DC}$	A	1110	1830	2595
Input current				
• Rated current $I_{rated\ I}$	A	610	1000	1420
• Maximum current $I_{max\ I}$	A	915	1500	2130
Current demand				
• 24 V DC auxiliary power supply	A	0.7	0.7	0.7
DC link capacitance				
• Basic Line Module	µF	12000	20300	26100
• Drive line-up, max.	µF	96000	162400	208800
Power loss, at 50 Hz 400 V [2]				
• Dissipated to coolant	kW	2.7	4.36	5.82
• Dissipated to ambient air	kW	0.25	0.41	0.57
• Total	kW	2.95	4.77	6.39
Coolant volume flow [3]	l/min	9	9	12
Liquid volume of the integrated heat exchanger	dm^3	0.45	0.45	0.79
Pressure drop, typ. [4] for volume flow	Pa	70000	70000	70000
Heat exchanger material		Aluminum	Aluminum	Aluminum
Sound pressure level L_{pA} (1 m) at 50/60 Hz	dB	54	56	56
Line connection U1, V1, W1		2 × M12 nut	2 × M12 nut	2 × M12 nut
• Conductor cross section, max. (IEC)	mm^2	4 × 240	4 × 240	4 × 240
DC link connection DCP, DCN		2 × M12 nut Busbar	2 × M12 nut Busbar	2 × M12 nut Busbar
PE/GND connection		2 × M12 nut	2 × M12 nut	2 × M12 nut
• Conductor cross section, max. (IEC)	mm^2	4 × 240	4 × 240	4 × 240
Cable length, max. [5]				
• Shielded	m (ft)	2600 (8531)	4000 (13124)	4800 (15749)
• Unshielded	m (ft)	3900 (12796)	6000 (19686)	7200 (23623)
Dimensions				
• Width	mm (in)	160 (6.3)	160 (6.3)	160 (6.3)
• Height	mm (in)	1137 (44.8)	1137 (44.8)	1562 (61.5)
• Depth	mm (in)	545 (21.5)	545 (21.5)	545 (21.5)
Weight, approx.	kg (lb)	108 (238)	108 (238)	185 (408)
Frame size		FBL	FBL	GBL
Minimum short-circuit current [6]	A	8800	12400	20000

1) The base-load current $I_{H\ DC}$ is the basis for a duty cycle of 150 % for 60 s or $I_{max\ DC}$ for 5 s with a duty cycle duration of 300 s.

2) The specified power loss represents the maximum value at 100 % utilization. The value is lower under normal operating conditions. To ensure safe dissipation of the minor power loss released to the ambient air, it is important to follow the instructions pertaining to control cabinet installation in the SINAMICS Low Voltage Engineering Manual.

3) The value applies to coolants comprising water and a mixture of water and anti-freeze agent.

4) The value is valid for water as coolant. Additional information and notes on other coolants is provided in the SINAMICS Low Voltage Engineering Manual.

5) Total of all motor cables and DC link. Longer cable lengths for specific configurations are available on request. For additional information, please refer to the SINAMICS Low Voltage Engineering Manual.

6) Current required for reliably triggering protective devices.

© Siemens AG 2017

Technical specifications (continued)

Line voltage 500 ... 690 V 3 AC		Basic Line Modules			
		6SL3335-1TG34-2AA3	6SL3335-1TG37-3AA3	6SL3335-1TG41-3AA3	6SL3335-1TG41-7AA3
Rated power					
• At $I_{rated\ DC}$ (50 Hz 690 V)	kW	**355**	**630**	**1100**	**1370**
• At I_H (50 Hz 690 V)	kW	275	475	840	1070
• At $I_{rated\ DC}$ (50 Hz 500 V)	kW	245	420	750	950
• At I_H (50 Hz 500 V)	kW	200	345	610	775
• At $I_{rated\ DC}$ (60 Hz 575 V)	hp	395	705	1230	1530
• At I_H (60 Hz 575 V)	hp	305	530	940	1195
DC link current					
• Rated current $I_{rated\ DC}$	A	420	730	1300	1650
• Base-load current $I_{H\ DC}$ [1]	A	328	570	1014	1287
• Maximum current $I_{max\ DC}$	A	630	1095	1950	2475
Input current					
• Rated current $I_{rated\ I}$	A	340	600	1070	1350
• Maximum current $I_{max\ I}$	A	510	900	1605	2025
Current demand					
• 24 V DC auxiliary power supply	A	0.7	0.7	0.7	0.7
DC link capacitance					
• Basic Line Module	µF	4800	7700	15500	19300
• Drive line-up, max.	µF	38400	61600	124000	154400
Power loss, at 50 Hz 690 V [2]					
• Dissipated to coolant	kW	1.55	2.71	4.66	5.7
• Dissipated to ambient air	kW	0.21	0.38	0.43	0.55
• Total	kW	1.76	3.09	5.09	6.25
Coolant volume flow [3]	l/min	9	9	12	12
Liquid volume of the integrated heat exchanger	dm^3	0.45	0.45	0.79	0.79
Pressure drop, typ. [4] for volume flow	Pa	70000	70000	70000	70000
Heat exchanger material		Aluminum	Aluminum	Aluminum	Aluminum
Sound pressure level L_{pA} (1 m) at 50/60 Hz	dB	54	54	56	56
Line connection U1, V1, W1		2 × M12 nut	2 × M12 nut	2 × M12 nut	2 × M12 nut
• Conductor cross section, max. (IEC)	mm^2	4 × 240	4 × 240	4 × 240	4 × 240
DC link connection DCP, DCN		2 × M12 nut Busbar	2 × M12 nut Busbar	2 × M12 nut Busbar	2 × M12 nut Busbar
PE/GND connection		2 × M12 nut	2 × M12 nut	2 × M12 nut	2 × M12 nut
• Conductor cross section, max. (IEC)		4 × 240	4 × 240	4 × 240	4 × 240
Cable length, max. [5]					
• Shielded	m (ft)	1500 (4921)	1500 (4921)	2250 (7382)	2250 (7382)
• Unshielded	m (ft)	2250 (7382)	2250 (7382)	3375 (11073)	3375 (11073)
Dimensions					
• Width	mm (in)	160 (6.3)	160 (6.3)	160 (6.3)	160 (6.3)
• Height	mm (in)	1137 (44.8)	1137 (44.8)	1562 (61.5)	1562 (61.5)
• Depth	mm (in)	545 (21.5)	545 (21.5)	545 (21.5)	545 (21.5)
Weight, approx.	kg (lb)	108 (238)	108 (238)	185 (408)	185 (408)
Frame size		FBL	FBL	GBL	GBL
Minimum short-circuit current [6]	A	4400	7200	16800	18900

1) The base-load current $I_{H\ DC}$ is the basis for a duty cycle of 150 % for 60 s or $I_{max\ DC}$ for 5 s with a duty cycle duration of 300 s.

2) The specified power loss represents the maximum value at 100 % utilization. The value is lower under normal operating conditions. To ensure safe dissipation of the minor power loss released to the ambient air, it is important to follow the instructions pertaining to control cabinet installation in the SINAMICS Low Voltage Engineering Manual.

3) The value applies to coolants comprising water and a mixture of water and anti-freeze agent.

4) The value is valid for water as coolant. Additional information and notes on other coolants is provided in the SINAMICS Low Voltage Engineering Manual.

5) Total of all motor cables and DC link. Longer cable lengths for specific configurations are available on request. For additional information, please refer to the SINAMICS Low Voltage Engineering Manual.

6) Current required for reliably triggering protective devices.

© Siemens AG 2017

Overview

A Motor Module comprises a self-commutated inverter with IGBTs. It generates a variable voltage with variable frequency from the DC link voltage that feeds the connected motor.

Multiple Motor Modules can be operated on a single DC link. This permits energy to be transferred between the Motor Modules. This means that if one Motor Module operating in generator mode produces energy, the energy can be used by another Motor Module operating in motor mode.

Motor Modules are controlled by a Control Unit.

Liquid-cooled Motor Modules are especially suitable for applications where installation space is restricted and environmental conditions are harsh. Liquid cooling ensures efficient heat dissipation.

Design

The liquid-cooled Motor Modules have the following interfaces as standard:

- 1 motor connection
- 1 connection for the 24 V DC electronics power supply
- 1 DC link connection (DCP, DCN) for connecting to the supply DC link
- 3 DRIVE-CLiQ sockets
- 1 temperature sensor input for KTY84-130, Pt1000, PTC or Pt100 (Pt1000 can be used from firmware V4.7 HF17)
- 1 connection for Safe Brake Adapter
- 1 connection for Safety Integrated
- 2 PE connections
- 2 coolant connections

The status of the Motor Modules is indicated via three LEDs.

The scope of supply of the Motor Modules includes:

- 1 DRIVE-CLiQ cable for connection to the Control Unit
- 2 seals for coolant connections
- 1 set of warning labels in 30 languages (BG, CN, CZ, DE, DK, EE, ES, FI, FR, GB, GR, HU, IE, IS, IT, JP, KR, LT, LV, MT, NL, NO, PL, PT, RO, RU, SE, SI, SK, TR)

Selection and ordering data

Type rating at 400 V, 50 Hz (460 V, 60 Hz) or 690 V, 50 Hz (575 V, 60 Hz) kW (hp)	Rated output current A	**Motor Module** Article No.
Line voltage 380 ... 480 V 3 AC (DC link voltage 510 ... 720 V DC)		
110 (150)	210	**6SL3325-1TE32-1AA3**
132 (200)	260	**6SL3325-1TE32-6AA3**
160 (250)	310	**6SL3325-1TE33-1AA3**
250 (400)	490	**6SL3325-1TE35-0AA3**
315 (500)	605	**6SL3325-1TE36-1AA3**
400 (600)	745	**6SL3325-1TE37-5AA3**
450 (700)	840	**6SL3325-1TE38-4AA3**
560 (800)	985	**6SL3325-1TE41-0AA3**
710 (1000)	1260	**6SL3325-1TE41-2AA3**
800 (1150)	1405	**6SL3325-1TE41-4AA3**
800 (1000) [1]	1330	**6SL3325-1TE41-4AS3**
Line voltage 500 ... 690 V 3 AC (DC link voltage 675 ... 1035 V DC)		
90 (75)	100	**6SL3325-1TG31-0AA3**
132 (150)	150	**6SL3325-1TG31-5AA3**
200 (200)	215	**6SL3325-1TG32-2AA3**
315 (300)	330	**6SL3325-1TG33-3AA3**
450 (450)	465	**6SL3325-1TG34-7AA3**
560 (600)	575	**6SL3325-1TG35-8AA3**
710 (700)	735	**6SL3325-1TG37-4AA3**
800 (800)	810	**6SL3325-1TG38-0AA3**
800 (800)	810	**6SL3325-1TG38-1AA3**
1000 (1000)	1025	**6SL3325-1TG41-0AA3**
1200 (1250)	1270	**6SL3325-1TG41-3AA3**
1500 (1500)	1560	**6SL3325-1TG41-6AA3**

Description	Article No.
Accessories	
3-way valve [2]	**VXF41.../VXG41...**
Actuator for 3-way valve [2]	
• 230 V 1 AC	**SAX31...**
• 24 V AC/DC	**SAX61.../SAX81...**
Accessories	
Dust protection blanking plugs (50 units) For DRIVE-CLiQ port	**6SL3066-4CA00-0AA0**

[1] This Motor Module has been specifically designed for loads demanding a high dynamic performance.

[2] Recommended components for installing a flow control as condensation protection; manufactured by Siemens Building Technologies.

© Siemens AG 2017

Integration

The liquid-cooled Motor Modules communicate with the higher-level control module via DRIVE-CLiQ. The control module in this case can be a CU320-2 or a SIMOTION D Control Unit.

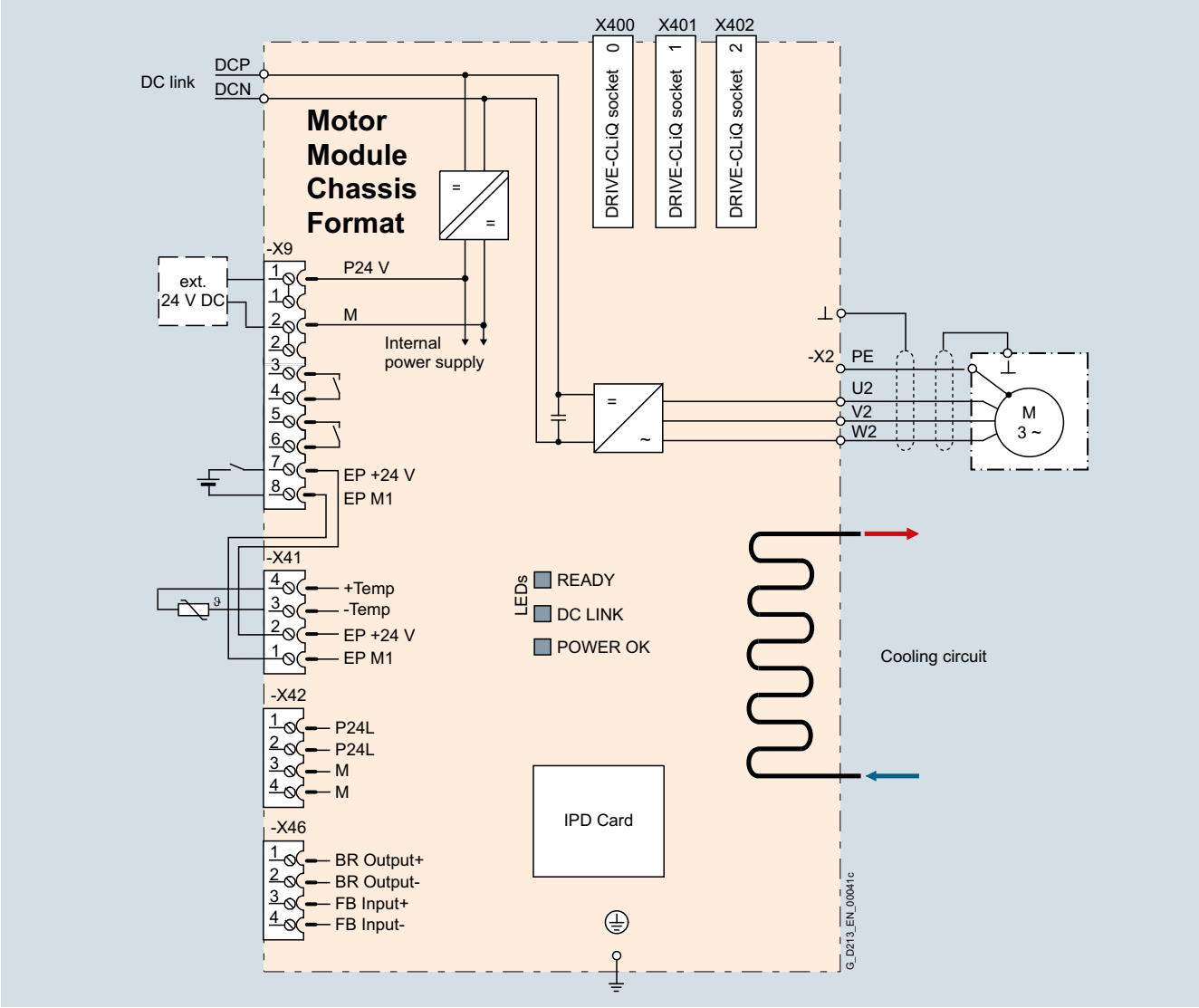

Connection example of a liquid-cooled Motor Module

Technical specifications

General technical specifications

Electrical specifications	
Efficiency	98.5 %
DC link voltage (up to 2000 m (6562 ft) above sea level)	510 ... 720 V DC (line supply voltage 380 ... 480 V 3 AC) or 675 ... 1035 V DC (line supply voltage 500 ... 690 V 3 AC)
Output frequency [1]	
• Control mode Servo	0 ... 550 Hz
• Control mode Vector	0 ... 550 Hz
• Control mode V/f	0 ... 550 Hz
Safety Integrated	Safety Integrity Level 2 (SIL2) acc. to IEC 61508, Performance Level d (PLd) acc. to EN ISO 13849-1 and Control Category 3 acc. to EN ISO 13849-1.

[1] Please note:
- The correlation between the maximum output frequency, pulse frequency and current derating. Higher output frequencies on request.
  For further information, see
  https://support.industry.siemens.com/cs/document/104020669
- The correlation between the minimum output frequency and permissible output current (current derating).
  Information is provided in the SINAMICS Low Voltage Engineering Manual.

© Siemens AG 2017

Technical specifications (continued)

Line voltage 380 ... 480 V 3 AC DC link voltage 510 ... 720 V DC		Motor Modules				
		6SL3325-1TE32-1AA3	6SL3325-1TE32-6AA3	6SL3325-1TE33-1AA3	6SL3325-1TE35-0AA3	6SL3325-1TE36-1AA3
Type rating						
• At I_L (50 Hz 400 V) [1]	kW	**110**	**132**	**160**	**250**	**315**
• At I_H (50 Hz 400 V) [1]	kW	90	110	132	200	250
• At I_L (60 Hz 460 V) [2]	hp	150	200	250	400	500
• At I_H (60 Hz 460 V) [2]	hp	150	200	200	350	350
Output current						
• Rated current $I_{rated\ O}$	A	210	260	310	490	605
• Base-load current I_L [3]	A	205	250	302	477	590
• Base-load current I_H [4]	A	178	233	277	438	460
• Maximum current $I_{max\ O}$	A	307	375	453	715	885
DC link current						
• Rated current $I_{rated\ DC}$ when supplied via						
- Basic Line Module	A	256	317	380	600	738
- Active Line Module	A	230	287	340	538	664
• Base-load current $I_{L\ DC}$ [3] when supplied via						
- Basic Line Module	A	250	305	368	581	719
- Active Line Module	A	225	274	331	522	646
• Base-load current $I_{H\ DC}$ [4] when supplied via						
- Basic Line Module	A	227	284	338	534	561
- Active Line Module	A	195	255	303	480	504
Current demand						
• 24 V DC auxiliary power supply	A	1.4	1.4	1.5	1.5	1.6
DC link capacitance	µF	4800	5800	8400	9600	12600
Pulse frequency [5]						
• Rated frequency	kHz	2	2	2	2	1.25
• Pulse frequency, max.						
- Without current derating	kHz	2	2	2	2	1.25
- With current derating	kHz	8	8	8	8	7.5
Power loss, max. [6]						
• At 50 Hz 400 V	kW	1.61	1.95	2.29	3.56	4.81
• At 60 Hz 460 V	kW	1.68	2.06	2.38	3.74	5.25
• Dissipated to ambient air	kW	0.06	0.07	0.09	0.14	0.16
Coolant volume flow [7]	l/min	9	9	12	12	16
Liquid volume of the integrated heat exchanger	dm^3	0.31	0.31	0.91	0.91	0.74
Pressure drop, typ. [8] for volume flow	Pa	70000	70000	70000	70000	70000
Heat exchanger material		Stainless steel	Stainless steel	Stainless steel	Stainless steel	Aluminum
Sound pressure level L_{pA} (1 m) at 50/60 Hz	dB	52	52	52	52	54
DC link connection DCP, DCN		2 × hole for M12 Busbar	2 × hole for M12 Busbar	2 × hole for M12 Busbar	2 × hole for M12 Busbar	2 × hole for M12 Busbar
Motor connection U2, V2, W2		Hole for M12	Hole for M12	Hole for M12	Hole for M12	2 × hole for M12
• Conductor cross section, max. (IEC)	mm^2	2 × 95	2 × 95	2 × 240	2 × 240	4 × 185
PE/GND connection		2 × hole for M12	2 × hole for M12	2 × hole for M12	2 × hole for M12	2 × hole for M12
• Conductor cross section, max. (IEC)	mm^2	2 × 95	2 × 95	2 × 240	2 × 240	4 × 185

Footnotes see next page.

© Siemens AG 2017

Technical specifications (continued)

Line voltage 380 ... 480 V 3 AC DC link voltage 510 ... 720 V DC		Motor Modules				
		6SL3325-1TE32-1AA3	6SL3325-1TE32-6AA3	6SL3325-1TE33-1AA3	6SL3325-1TE35-0AA3	6SL3325-1TE36-1AA3
Cable length, max. [9]						
• Shielded	m (ft)	300 (984)	300 (984)	300 (984)	300 (984)	300 (984)
• Unshielded	m (ft)	450 (1476)	450 (1476)	450 (1476)	450 (1476)	450 (1476)
Dimensions						
• Width	mm (in)	150 (5.91)	150 (5.91)	150 (5.91)	150 (5.91)	265 (10.4)
• Height	mm (in)	746 (29.4)	746 (29.4)	1172 (46.1)	1172 (46.1)	1002 (39.5)
• Depth	mm (in)	545 (21.5)	545 (21.5)	545 (21.5)	545 (21.5)	545 (21.5)
Weight, approx.	kg (lb)	41 (90)	41 (90)	80 (176)	80 (176)	110 (243)
Frame size		FXL	FXL	GXL	GXL	HXL

[1] Rated output of a typical 6-pole standard induction motor based on I_L or I_H for 400 V 3 AC 50 Hz.

[2] Rated output of a typical 6-pole standard induction motor based on I_L or I_H for 460 V 3 AC 60 Hz.

[3] The base-load current I_L is based on a duty cycle of 110 % for 60 s or 150 % for 10 s with a duty cycle duration of 300 s.

[4] The base-load current I_H is based on a duty cycle of 150 % for 60 s or 160 % for 10 s with a duty cycle duration of 300 s.

[5] Additional notes regarding the correlation between the pulse frequency and maximum output current/output frequency is provided in the SINAMICS Low Voltage Engineering Manual.

[6] The specified power loss represents the maximum value at 100 % utilization. The value is lower under normal operating conditions. To ensure safe dissipation of the minor power loss released to the ambient air, it is important to follow the instructions pertaining to control cabinet installation in the SINAMICS Low Voltage Engineering Manual.

[7] The value applies to coolants comprising water and a mixture of water and anti-freeze agent.

[8] The value is valid for water as coolant.
Additional information and notes on other coolants is provided in the SINAMICS Low Voltage Engineering Manual.

[9] Total of all motor cables. Longer cable lengths for specific configurations are available on request.
For additional information, please refer to the SINAMICS Low Voltage Engineering Manual.

© Siemens AG 2017

Technical specifications (continued)

Line voltage 380 ... 480 V 3 AC DC link voltage 510 ... 720 V DC		Motor Modules					
		6SL3325-1TE37-5AA3	6SL3325-1TE38-4AA3	6SL3325-1TE41-0AA3	6SL3325-1TE41-2AA3	6SL3325-1TE41-4AA3	6SL3325-1TE41-4AS3 [1]
Type rating							
• At I_L (50 Hz 400 V) [2]	kW	**400**	**450**	**560**	**710**	**800**	**800**
• At I_H (50 Hz 400 V) [2]	kW	315	400	450	630	710	630
• At I_L (60 Hz 460 V) [3]	hp	600	700	800	1000	1150	1000
• At I_H (60 Hz 460 V) [3]	hp	450	600	700	900	1000	900
Output current							
• Rated current $I_{rated\ O}$	A	745	840	985	1260	1405	1330
• Base-load current I_L [4]	A	725	820	960	1230	1370	1310
• Base-load current I_H [5]	A	570	700	860	1127	1257	1150
• Maximum current $I_{max\ O}$	A	1087	1230	1440	1845	2055	2055
DC link current							
• Rated current $I_{rated\ DC}$ when supplied via							
- Basic Line Module	A	894	1025	1202	1512	1714	1550
- Active Line Module	A	805	922	1080	1361	1544	1403
• Base-load current $I_{L\ DC}$ [4] when supplied from							
- Basic Line Module	A	871	1000	1170	1474	1670	1525
- Active Line Module	A	784	898	1051	1326	1500	1405
• Base-load current $I_{H\ DC}$ [5] when supplied from							
- Basic Line Module	A	795	853	1048	1345	1532	1676
- Active Line Module	A	716	767	942	1211	1377	1403
Current demand							
• 24 V DC auxiliary power supply	A	1.6	1.6	1.46	1.46	1.46	1.46
DC link capacitance	µF	17400	17400	21000	29000	29000	21000
Pulse frequency [6]							
• Rated frequency	kHz	1.25	1.25	1.25	1.25	1.25	2
• Pulse frequency, max.							
- Without current derating	kHz	1.25	1.25	1.25	1.25	1.25	2
- With current derating	kHz	7.5	7.5	7.5	7.5	7.5	4
Power loss, max. [7]							
• At 50 Hz 400 V	kW	5.1	5.75	7.9	9.15	10.2	10.9
• At 60 Hz 460 V	kW	5.61	6.33	8.55	10.05	11.2	12.3
• Dissipated to ambient air	kW	0.2	0.23	0.44	0.56	0.62	0.65
Coolant volume flow [8]	l/min	16	16	27	27	27	27
Liquid volume of the integrated heat exchanger	dm^3	0.74	0.74	1.56	1.56	1.56	1.56
Pressure drop, typ. [9] for volume flow	Pa	70000	70000	70000	70000	70000	70000
Heat exchanger material		Aluminum	Aluminum	Aluminum	Aluminum	Aluminum	Aluminum
Sound pressure level L_{pA} (1 m) at 50/60 Hz	dB	54	54	56	56	56	56
DC link connection DCP, DCN		2 × hole for M12 Busbar	2 × hole for M12 Busbar	2 × hole for M12 Busbar	2 × hole for M12 Busbar	2 × hole for M12 Busbar	2 × hole for M12 Busbar
Motor connection U2, V2, W2		2 × hole for M12	2 × hole for M12	2 × hole for M12	2 × hole for M12	2 × hole for M12	2 × hole for M12
• Conductor cross section, max. (IEC)	mm^2	4 × 185	4 × 185	4 × 240	4 × 240	4 × 240	4 × 240
PE/GND connection		2 × hole for M12	2 × hole for M12	2 × hole for M12	2 × hole for M12	2 × hole for M12	2 × hole for M12
• Conductor cross section, max. (IEC)	mm^2	4 × 185	4 × 185	Busbar	Busbar	Busbar	Busbar

Footnotes see next page.

© Siemens AG 2017

Technical specifications (continued)

Line voltage 380 ... 480 V 3 AC DC link voltage 510 ... 720 V DC		Motor Modules					
		6SL3325-1TE37-5AA3	6SL3325-1TE38-4AA3	6SL3325-1TE41-0AA3	6SL3325-1TE41-2AA3	6SL3325-1TE41-4AA3	6SL3325-1TE41-4AS3 [1]
Cable length, max. [10]							
• Shielded	m (ft)	300 (984)	300 (984)	300 (984)	300 (984)	300 (984)	300 (984)
• Unshielded	m (ft)	450 (1476)	450 (1476)	450 (1476)	450 (1476)	450 (1476)	450 (1476)
Dimensions							
• Width	mm (in)	265 (10.4)	265 (10.4)	295 (11.6)	295 (11.6)	295 (11.6)	295 (11.6)
• Height	mm (in)	1002 (39.5)	1002 (39.5)	1516 (59.7)	1516 (59.7)	1516 (59.7)	1516 (59.7)
• Depth	mm (in)	545 (21.5)	545 (21.5)	545 (21.5)	545 (21.5)	545 (21.5)	545 (21.5)
Weight, approx.	kg (lb)	110 (243)	110 (243)	220 (485)	220 (485)	220 (485)	230 (507)
Frame size		HXL	HXL	JXL	JXL	JXL	JXL

1) This Motor Module has been specifically designed for loads demanding a high dynamic performance. The derating factor k_{IGBT} and the derating characteristics can be ignored (see section "Duty cycles" in the SINAMICS Low Voltage Engineering Manual).

2) Rated output of a typical 6-pole standard induction motor based on I_L or I_H for 400 V 3 AC 50 Hz.

3) Rated output of a typical 6-pole standard induction motor based on I_L or I_H for 460 V 3 AC 60 Hz.

4) The base-load current I_L is based on a duty cycle of 110 % for 60 s or 150 % for 10 s with a duty cycle duration of 300 s.

5) The base-load current I_H is based on a duty cycle of 150 % for 60 s or 160 % for 10 s with a duty cycle duration of 300 s.

6) Additional notes regarding the correlation between the pulse frequency and maximum output current/output frequency is provided in the SINAMICS Low Voltage Engineering Manual.

7) The specified power loss represents the maximum value at 100 % utilization. The value is lower under normal operating conditions. To ensure safe dissipation of the minor power loss released to the ambient air, it is important to follow the instructions pertaining to control cabinet installation in the SINAMICS Low Voltage Engineering Manual.

8) The value applies to coolants comprising water and a mixture of water and anti-freeze agent.

9) The value is valid for water as coolant.
Additional information and notes on other coolants is provided in the SINAMICS Low Voltage Engineering Manual.

10) Sum of all motor cables. Longer cable lengths for specific configurations are available on request.
For additional information, please refer to the SINAMICS Low Voltage Engineering Manual.

© Siemens AG 2017

Technical specifications (continued)

Line voltage 500 ... 690 V 3 AC DC link voltage 675 ... 1035 V DC		Motor Modules					
		6SL3325-1TG31-0AA3	6SL3325-1TG31-5AA3	6SL3325-1TG32-2AA3	6SL3325-1TG33-3AA3	6SL3325-1TG34-7AA3	6SL3325-1TG35-8AA3
Type rating							
• At I_L (50 Hz 690 V) [1]	kW	**90**	**132**	**200**	**315**	**450**	**560**
• At I_H (50 Hz 690 V) [1]	kW	75	110	160	250	400	450
• At I_L (50 Hz 500 V) [1]	kW	55	90	132	200	315	400
• At I_H (50 Hz 500 V) [1]	kW	55	90	132	200	250	315
• At I_L (60 Hz 575 V) [2]	hp	75	150	200	300	450	600
• At I_H (60 Hz 575 V) [2]	hp	75	125	200	250	450	500
Output current							
• Rated current $I_{rated\ O}$	A	100	150	215	330	465	575
• Base-load current I_L [3]	A	95	142	208	320	452	560
• Base-load current I_H [4]	A	89	134	192	280	416	514
• Maximum current $I_{max\ O}$	A	142	213	312	480	678	840
DC link current							
• Rated current $I_{rated\ DC}$ when supplied via							
- Basic Line Module	A	122	183	263	403	558	702
- Active Line Module	A	110	165	237	363	502	632
• Base-load current $I_{L\ DC}$ [3] when supplied via							
- Basic Line Module	A	116	173	253	390	544	683
- Active Line Module	A	105	156	229	352	489	616
• Base-load current $I_{H\ DC}$ [4] when supplied from							
- Basic Line Module	A	108	163	234	341	496	627
- Active Line Module	A	98	147	211	308	446	565
Current demand							
• 24 V DC auxiliary power supply	A	1.0	1.0	1.5	1.5	1.6	1.6
DC link capacitance	µF	2800	2800	4200	5800	9670	9670
Pulse frequency [5]							
• Rated frequency	kHz	1.25	1.25	1.25	1.25	1.25	1.25
• Pulse frequency, max.							
- Without current derating	kHz	1.25	1.25	1.25	1.25	1.25	1.25
- With current derating	kHz	7.5	7.5	7.5	7.5	7.5	7.5
Power loss, max. [6]							
• At 50 Hz 690 V	kW	1.15	1.64	2.34	3.38	5.44	5.61
• At 60 Hz 575 V	kW	1.02	1.45	2.05	2.96	5.1	5.45
• Dissipated to ambient air	kW	0.06	0.07	0.09	0.12	0.14	0.16
Coolant volume flow [7]	l/min	9	9	12	12	16	16
Liquid volume of the integrated heat exchanger	dm^3	0.31	0.31	0.91	0.91	0.74	0.74
Pressure drop, typ. [8] for volume flow	Pa	70000	70000	70000	70000	70000	70000
Heat exchanger material		Stainless steel	Stainless steel	Stainless steel	Stainless steel	Aluminum	Aluminum
Sound pressure level L_{pA} (1 m) at 50/60 Hz	dB	52	52	52	52	54	54
DC link connection DCP, DCN		2 × hole for M12 Busbar	2 × hole for M12 Busbar	2 × hole for M12 Busbar	2 × hole for M12 Busbar	2 × hole for M12 Busbar	2 × hole for M12 Busbar
Motor connection U2, V2, W2		Hole for M12	Hole for M12	Hole for M12	Hole for M12	2 × hole for M12	2 × hole for M12
• Conductor cross section, max. (IEC)	mm^2	2 × 95	2 × 95	4 × 240	4 × 240	4 × 185	4 × 185
PE/GND connection		2 × hole for M12	2 × hole for M12	2 × hole for M12	2 × hole for M12	2 × hole for M12	2 × hole for M12
• Conductor cross section, max. (IEC)	mm^2	2 × 95	2 × 95	2 × 240	2 × 240	4 × 185	4 × 185

Footnotes see next page.

© Siemens AG 2017

Technical specifications (continued)

Line voltage 500 ... 690 V 3 AC DC link voltage 675 ... 1035 V DC		Motor Modules					
		6SL3325-1TG31-0AA3	6SL3325-1TG31-5AA3	6SL3325-1TG32-2AA3	6SL3325-1TG33-3AA3	6SL3325-1TG34-7AA3	6SL3325-1TG35-8AA3
Cable length, max. [9]							
• Shielded	m (ft)	300 (984)	300 (984)	300 (984)	300 (984)	300 (984)	300 (984)
• Unshielded	m (ft)	450 (1476)	450 (1476)	450 (1476)	450 (1476)	450 (1476)	450 (1476)
Dimensions							
• Width	mm (in)	150 (5.91)	150 (5.91)	150 (5.91)	150 (5.91)	265 (10.4)	265 (10.4)
• Height	mm (in)	728 (28.7)	728 (28.7)	1172 (46.1)	1172 (46.1)	1002 (39.5)	1002 (39.5)
• Depth	mm (in)	545 (21.5)	545 (21.5)	545 (21.5)	545 (21.5)	545 (21.5)	545 (21.5)
Weight, approx.	kg (lb)	41 (90)	41 (90)	80 (176)	80 (176)	110 (243)	110 (243)
Frame size		FXL	FXL	GXL	GXL	HXL	HXL

[1] Rated output of a typical 6-pole standard induction motor based on I_L or I_H for 500 V or 690 V 3 AC 50 Hz.

[2] Rated output of a typical 6-pole standard induction motor based on I_L or I_H for 575 V 3 AC 60 Hz.

[3] The base-load current I_L is based on a duty cycle of 110 % for 60 s or 150 % for 10 s with a duty cycle duration of 300 s.

[4] The base-load current I_H is based on a duty cycle of 150 % for 60 s or 160 % for 10 s with a duty cycle duration of 300 s.

[5] Additional notes regarding the correlation between the pulse frequency and maximum output current/output frequency is provided in the SINAMICS Low Voltage Engineering Manual.

[6] The specified power loss represents the maximum value at 100 % utilization. The value is lower under normal operating conditions. To ensure safe dissipation of the minor power loss released to the ambient air, it is important to follow the instructions pertaining to control cabinet installation in the SINAMICS Low Voltage Engineering Manual.

[7] The value applies to coolants comprising water and a mixture of water and anti-freeze agent.

[8] The value is valid for water as coolant.
Additional information and notes on other coolants is provided in the SINAMICS Low Voltage Engineering Manual.

[9] Total of all motor cables. Longer cable lengths for specific configurations are available on request.
For additional information, please refer to the SINAMICS Low Voltage.

© Siemens AG 2017

Technical specifications (continued)

Line voltage 500 ... 690 V 3 AC DC link voltage 675 ... 1035 V DC		Motor Modules					
		6SL3325-1TG37-4AA3	6SL3325-1TG38-0AA3 [1]	6SL3325-1TG38-1AA3	6SL3325-1TG41-0AA3	6SL3325-1TG41-3AA3	6SL3325-1TG41-6AA3
Type rating							
• At I_L (50 Hz 690 V) [2]	kW	**710**	**800**	**800**	**1000**	**1200**	**1500**
• At I_H (50 Hz 690 V) [2]	kW	630	710	710	900	1000	1260
• At I_L (50 Hz 500 V) [2]	kW	500	560	560	710	900	1000
• At I_H (50 Hz 500 V) [2]	kW	450	500	560	630	800	900
• At I_L (60 Hz 575 V) [3]	hp	700	800	800	1000	1250	1500
• At I_H (60 Hz 575 V) [3]	hp	700	700	700	900	1000	1250
Output current							
• Rated current $I_{rated\ O}$	A	735	810	810	1025	1270	1560
• Base-load current I_L [5]	A	710	790	790	1000	1230	1500
• Base-load current I_H [5]	A	657	724	724	917	1136	1284
• Maximum current $I_{max\ O}$	A	1065	1185	1185	1500	1845	2055
DC link current							
• Rated current $I_{rated\ DC}$ when supplied via							
- Basic Line Module	A	903	990	990	1250	1550	1903
- Active Line Module	A	759	891	891	1125	1395	1605
• Base-load current $I_{L\ DC}$ [4] when supplied from							
- Basic Line Module	A	870	948	963	1219	1500	1800
- Active Line Module	A	781	870	869	1100	1353	1650
• Base-load current $I_{H\ DC}$ [5] when supplied from							
- Basic Line Module	A	795	885	883	1118	1384	1680
- Active Line Module	A	732	808	796	1009	1250	1550
Current demand							
• 24 V DC auxiliary power supply	A	1.6	1.6	1.46	1.46	1.46	1.46
DC link capacitance	µF	10500	10500	14000	16000	19330	21000
Pulse frequency [6]							
• Rated frequency	kHz	1.25	1.25	1.25	1.25	1.25	1.25
• Pulse frequency, max.							
- Without current derating	kHz	1.25	1.25	1.25	1.25	1.25	1.25
- With current derating	kHz	7.5	7.5	7.5	7.5	7.5	7.5
Power loss, max. [6]							
• At 50 Hz 690 V	kW	7.65	8.47	9.56	10.87	13.49	17.9
• At 60 Hz 575 V	kW	6.67	7.39	8.34	9.55	11.84	15.7
• Dissipated to ambient air	kW	0.2	0.22	0.43	0.53	0.57	0.78
Coolant volume flow [8]	l/min	16	16	27	27	27	27
Liquid volume of the integrated heat exchanger	dm^3	0.74	0.74	1.56	1.56	1.56	1.56
Pressure drop, typ. [9] for volume flow	Pa	70000	70000	70000	70000	70000	70000
Heat exchanger material		Aluminum	Aluminum	Aluminum	Aluminum	Aluminum	Aluminum
Sound pressure level L_{pA} (1 m) at 50/60 Hz	dB	54	54	56	56	56	56
DC link connection DCP, DCN		2 × hole for M12 Busbar	2 × hole for M12 Busbar	2 × hole for M12 Busbar	2 × hole for M12 Busbar	2 × hole for M12 Busbar	2 × hole for M12 Busbar
Motor connection U2, V2, W2		2 × hole for M12	2 × hole for M12	2 × hole for M12	2 × hole for M12	2 × hole for M12	2 × hole for M12
• Conductor cross section, max. (IEC)	mm^2	4 × 185	4 x 185	Busbar	Busbar	Busbar	Busbar
PE/GND connection		2 × hole for M12	2 × hole for M12	2 × hole for M12	2 × hole for M12	2 × hole for M12	2 × hole for M12
• Conductor cross section, max. (IEC)	mm^2	4 × 185	4 × 185	Busbar	Busbar	Busbar	Busbar

Footnotes see next page.

© Siemens AG 2017

Technical specifications (continued)

Line voltage 500 ... 690 V 3 AC DC link voltage 675 ... 1035 V DC		Motor Modules					
		6SL3325-1TG37-4AA3	6SL3325-1TG38-0AA3 [1]	6SL3325-1TG38-1AA3	6SL3325-1TG41-0AA3	6SL3325-1TG41-3AA3	6SL3325-1TG41-6AA3
Cable length, max. [10]							
• Shielded	m (ft)	300 (984)	300 (984)	300 (984)	300 (984)	300 (984)	300 (984)
• Unshielded	m (ft)	450 (1476)	450 (1476)	450 (1476)	450 (1476)	450 (1476)	450 (1476)
Dimensions							
• Width	mm (in)	265 (10.4)	265 (10.4)	295 (11.6)	295 (11.6)	295 (11.6)	295 (11.6)
• Height	mm (in)	1002 (39.5)	1002 (39.5)	1516 (59.7)	1516 (59.7)	1516 (59.7)	1516 (59.7)
• Depth	mm (in)	545 (21.5)	545 (21.5)	545 (21.5)	545 (21.5)	545 (21.5)	545 (21.5)
Weight, approx.	kg (lb)	110 (243)	110 (243)	220 (485)	220 (485)	220 (485)	230 (507)
Frame size		HXL	HXL	JXL	JXL	JXL	JXL

7

1) The device is optimized for a base pulse frequency of 1.25 kHz, for an increased pulse frequency – or for certain overloads the derating factor is higher than that for the device with article number 6SL3325-1TG38-1AAx.

2) Rated output of a typical 6-pole standard induction motor based on I_L or I_H for 500 V or 690 V 3 AC 50 Hz.

3) Rated output of a typical 6-pole standard induction motor based on I_L or I_H for 575 V 3 AC 60 Hz.

4) The base-load current I_L is based on a duty cycle of 110 % for 60 s or 150 % for 10 s with a duty cycle duration of 300 s.

5) The base-load current I_H is based on a duty cycle of 150 % for 60 s or 160 % for 10 s with a duty cycle duration of 300 s.

6) Additional notes regarding the correlation between the pulse frequency and maximum output current/output frequency is provided in the SINAMICS Low Voltage Engineering Manual.

7) The specified power loss represents the maximum value at 100 % utilization. The value is lower under normal operating conditions. To ensure safe dissipation of the minor power loss released to the ambient air, it is important to follow the instructions pertaining to control cabinet installation in the SINAMICS Low Voltage Engineering Manual.

8) The value applies to coolants comprising water and a mixture of water and anti-freeze agent.

9) The value is valid for water as coolant.
Additional information and notes on other coolants is provided in the SINAMICS Low Voltage Engineering Manual.

10) Sum of all motor cables. Longer cable lengths for specific configurations are available on request.
For additional information, please refer to the SINAMICS Low Voltage Engineering Manual.

© Siemens AG 2017

Technical specifications

General technical specifications

Unless clearly specified otherwise, the following technical data are valid for all the following system components of the air-cooled and liquid-cooled SINAMICS S120 drive system in the chassis format.

Electrical specifications			
Rated voltages	380 ... 480 V 3 AC ±10 % (-15 % <1 min) 500 ... 690 V 3 AC ±10 % (-15 % <1 min)		
Line supply types	Grounded TN/TT systems and non-grounded IT systems		
Line frequency	47 ... 63 Hz		
Overvoltage category	III to EN 61800-5-1		
Electronics power supply	24 V DC, -15 % +20 % implemented as PELV circuit in accordance with EN 61800-5-1 Ground = negative pole grounded via the electronics		
Mechanical specifications			
Degree of protection	IP00 or IP20 dependent on type		
Protection class	I acc. to EN 61800-5-1		
Touch protection	EN 50274/DGUV regulation 3 when used as intended		
Ambient conditions	**Storage** [1]	**Transport** [1]	**Operation**
Ambient temperature	-25 ... +55 °C (-13 ... +131 °F) Class 1K4 acc. to EN 60721-3-1	-25 ... +70 °C (-13 ...+158 °F) Class 2K4 acc. to EN 60721-3-2	Line-side components: 0 … 40 °C (32 ...104 °F) without derating Up to 55 °C (131 °F), see derating data Control Units, supplementary system components, and Sensor Modules: 0 ... 55 °C (32 ... 131 °F) (for operation in a control cabinet) DC link components and motor-side components: 0 ... 55 °C (32 ... 131 °F)
Relative humidity Condensation, splashwater, and ice formation not permitted (EN 60204, Part 1)	5 ... 95 % Class 1K4 acc. to EN 60721-3-1	5 ... 95 % at 40 °C (104 °F) Class 2K4 acc. to EN 60721-3-2	5 ... 95 % Class 3K3 acc. to EN 60721-3-3
Environmental class/ harmful chemical substances	Class 1C2 acc. to EN 60721-3-1	Class 2C2 acc. to EN 60721-3-2	Class 3C2 acc. to EN 60721-3-3
Organic/biological influences	Class 1B1 acc. to EN 60721-3-1	Class 2B1 acc. to EN 60721-3-2	Class 3B1 acc. to EN 60721-3-3
Degree of pollution	2 acc. to IEC/EN 61800-5-1	2 acc. to IEC/EN 61800-5-1	2 acc. to IEC/EN 61800-5-1
Installation altitude	Up to 2000 m (6562 ft) above sea level without derating >2000 m (6562 ft) above sea level, see derating data		
Mechanical stability	**Storage** [1]	**Transport** [1]	**Operation**
Vibratory load	–	Class 2M2 acc. to EN 60721-3-2	Test values acc. to EN 60068-2-6 test Fc: • 10 ... 58 Hz with constant deflection 0.075 mm • 58 ... 150 Hz with constant acceleration 9.81 m/s^2 (1 × *g*)
Shock load	–	Class 2M2 acc. to EN 60721-3-2	Test values according to EN 60068-2-27 test Ea: 98 m/s^2 (10 × *g*)/20 ms
Compliance with standards			
Conformances/ proofs of suitability according to	CE (EMC Directive No. 2014/30/EU, Low Voltage Directive No. 2014/35/EU, Machinery Directive 2006/42/EC for functional safety) cURus or cULus (only for devices connected to line supply voltages 380 ... 480 V 3 AC and 500 ... 600 V 3 AC)		
Radio interference suppression	SINAMICS S120 chassis format units are not designed for connection to the public grid (first environment). Radio interference suppression is compliant with the EMC product standard for variable-speed drives EN 61800-3, "Second environment" (industrial line supplies). EMC disturbances can occur when connected to the public grid. However, if additional measures are taken (e.g. → line filter), they can also be operated in the "first environment". For further information, see section configuration notes.		

Deviations from the specified class are underlined.

[1] In transport packaging.

© Siemens AG 2017

Overview

In conjunction with line reactors and a logically consistent configuration of the plant or system, line filters limit the interference conducted by the Basic Line Modules and Power Modules to the limit values of Category C2 acc. to EN 61800-3.

The line filters are suitable for TN and TT supply systems grounded at the neutral point.

Selection and ordering data

Line filters for Power Modules

Suitable for Power Module in the chassis format, air-cooled 6SL3310-...	Type rating of the Power Module at 400 V, 50 Hz (460 V, 60 Hz) kW (hp)	Rated input current of the Power Module A	**Line filter** Article No.
Line voltage 380 ... 480 V 3 AC			
1TE32-1AA3	110 (150)	229	**6SL3000-0BE32-5AA0**
1TE32-6AA3	132 (200)	284	**6SL3000-0BE34-4AA0**
1TE33-1AA3	160 (250)	338	
1TE33-8AA3	200 (300)	395	
1TE35-0AA3	250 (400)	509	**6SL3000-0BE36-0AA0**

Line filters for Basic Line Modules

Suitable for Basic Line Module chassis format, air-cooled 6SL3330-...	Rated power of the Basic Line Module at 400 V, 50 Hz (460 V, 60 Hz) or 690 V, 50 Hz (575 V, 60 Hz) kW (hp)	Rated input current of the Basic Line Module A	**Line filter** Article No.
Line voltage 380 ... 480 V 3 AC			
1TE34-2AA3	200 (305)	365	**6SL3000-0BE34-4AA0**
1TE35-3AA3	250 (385)	460	**6SL3000-0BE36-0AA0**
1TE38-2AA3	400 (615)	710	**6SL3000-0BE41-2AA0**
1TE41-2AA3	560 (860)	1010	
1TE41-5AA3	710 (1090)	1265	**6SL3000-0BE41-6AA0**
1TE41-8AA3	900 (1390)	1581	
Line voltage 500 ... 690 V 3 AC			
1TG33-0AA3	250 (250)	260	**6SL3000-0BG34-4AA0**
1TG34-3AA3	355 (350)	375	
1TG36-8AA3	560 (600)	575	**6SL3000-0BG36-0AA0**
1TG41-1AA3	900 (900)	925	**6SL3000-0BG41-2AA0**
1TG41-4AA3	1100 (1250)	1180	
7TG41-8AA3	1500 (1500)	1580	**6SL3000-0BG41-6AA0**

© Siemens AG 2017

Selection and ordering data (continued)

Line filters for Smart Line Modules

Suitable for Smart Line Module in chassis format, air-cooled 6SL3330-...	Rated power of the Smart Line Module at 400 V, 50 Hz (460 V, 60 Hz) or 690 V, 50 Hz (575 V, 60 Hz) kW (hp)	Rated input current of the Smart Line Module A	**Line filter** Article No.
Line voltage 380 ... 480 V 3 AC			
6TE35-5AA3	250 (385)	463	**6SL3000-0BE35-0AA0**
6TE37-3AA3	355 (545)	614	**6SL3760-0MB00-0AA0**
6TE41-1AA3	500 (770)	883	**6SL3760-0MC00-0AA0**
6TE41-3AA3	630 (970)	1093	
6TE41-7AA3	800 (1230)	1430	
Line voltage 500 ... 690 V 3 AC			
6TG35-5AA3	450 (500)	463	**6SL3760-0ME00-0AA0**
6TG38-8AA3	710 (790)	757	**6SL3760-0MN00-0AA0**
6TG41-2AA3	1000 (1115)	1009	
6TG41-7AA3	1400 (1465)	1430	**6SL3760-0MG00-0AA0**

Line filters for Active Line Modules

Suitable for Active Line Module chassis format, air-cooled 6SL3330-...	Rated power of the Active Line Module at 400 V, 50 Hz (460 V, 60 Hz) or 690 V, 50 Hz (575 V, 60 Hz) kW (hp)	Rated input current of the Active Line Module A	**Line filter** Article No.
Line voltage 380 ... 480 V 3 AC			
7TE32-1AA3	132 (200)	210	**6SL3000-0BE33-1AA0**
7TE32-6AA3	160 (250)	260	
7TE33-8AA3	235 (400)	380	**6SL3000-0BE35-0AA0**
7TE35-0AA3	300 (500)	490	
7TE36-1AA3	380 (600)	605	**6SL3760-0MB00-0AA0**
7TE37-5AA3	450 (600)	745	
7TE38-4AA3	500 (700)	840	**6SL3760-0MC00-0AA0**
7TE41-0AA3	630 (900)	985	
7TE41-2AA3	800 (1000)	1260	
7TE41-4AA3	900 (1250)	1405	
Line voltage 500 ... 690 V 3 AC			
7TG35-8AA3	630 (675)	575	**6SL3760-0ME00-0AA0**
7TG37-4AA3	800 (900)	735	**6SL3760-0MN00-0AA0**
7TG41-0AA3	1100 (1250)	1025	
7TG41-3AA3	1400 (1500)	1270	**6SL3760-0MG00-0AA0**

Note:

Line filters are not available for liquid-cooled drive units.

© Siemens AG 2017

Technical specifications

Line voltage 380 ... 480 V 3 AC		Line filter				
		6SL3000-0BE32-5AA0	6SL3000-0BE34-4AA0	6SL3000-0BE36-0AA0	6SL3000-0BE41-2AA0	6SL3000-0BE41-6AA0
Rated current	A	250	440	600	1200	1600
Power loss [1] At 50 Hz	kW	0.015	0.047	0.053	0.119	0.153
Load/line supply connection		1 × hole for M10 Provided for busbar connection	1 × hole for M10 Provided for busbar connection	1 × hole for M10 Provided for busbar connection	1 × hole for M12 Provided for busbar connection	1 × hole for M12 Provided for busbar connection
PE connection		Hole for M8	Hole for M8	Hole for M10	Hole for M10	Hole for M10
Degree of protection		IP00	IP00	IP00	IP00	IP00
Dimensions						
• Width	mm (in)	360 (14.2)	360 (14.2)	400 (15.7)	425 (16.7)	505 (19.9)
• Height	mm (in)	240 (9.45)	240 (9.45)	265 (10.4)	265 (10.4)	265 (10.4)
• Depth	mm (in)	116 (4.57)	116 (4.57)	140 (5.51)	145 (5.71)	145 (5.71)
Weight, approx.	kg (lb)	12.3 (27)	12.3 (27)	19 (42)	25.2 (56)	28.8 (63)
Suitable for Power Module in chassis format						
• Air-cooled	6SL3310-...	1TE32-1AA3	1TE32-6AA3 1TE33-1AA3 1TE33-8AA3	1TE35-0AA3	–	–
Suitable for Basic Line Module in chassis format						
• Air-cooled	6SL3330-...	–	1TE34-2AA3	1TE35-3AA3	1TE38-2AA3 1TE41-2AA3	1TE41-5AA3 1TE41-8AA3

Line voltage 500 ... 690 V 3 AC		Line filter			
		6SL3000-0BG34-4AA0	6SL3000-0BG36-0AA0	6SL3000-0BG41-2AA0	6SL3000-0BG41-6AA0
Rated current	A	440	600	1200	1600
Power loss [1] At 50 Hz	kW	0.047	0.053	0.119	0.153
Load/line supply connection		1 × hole for M10 Provided for busbar connection	1 × hole for M10 Provided for busbar connection	2 × hole for M12 Provided for busbar connection	2 × hole for M12 Provided for busbar connection
PE connection		Hole for M8	Hole for M10	Hole for M10	Hole for M10
Degree of protection		IP00	IP00	IP00	IP00
Dimensions					
• Width	mm (in)	360 (14.2)	400 (15.7)	425 (16.7)	505 (19.9)
• Height	mm (in)	240 (9.45)	265 (10.4)	265 (10.4)	265 (10.4)
• Depth	mm (in)	116 (4.57)	140 (5.51)	145 (5.71)	145 (5.71)
Weight, approx.	kg (lb)	12.3 (27)	19 (42)	25.2 (56)	28.8 (63)
Suitable for Basic Line Module in chassis format					
• Air-cooled	6SL3330-...	1TG33-0AA3 1TG34-3AA3	1TG36-8AA3	1TG41-1AA3 1TG41-4AA3	1TG41-8AA3

[1] The specified power loss represents the maximum value at 100 % utilization. The value is lower under normal operating conditions.

© Siemens AG 2017

Technical specifications (continued)

Line voltage 380 ... 480 V 3 AC		Line filter			
		6SL3000-0BE33-1AA0	6SL3000-0BE35-0AA0	6SL3760-0MB00-0AA0	6SL3760-0MC00-0AA0
Rated current	A	400	600	840	1405
Power loss [1] At 50 Hz	kW	0.042	0.06	0.058	0.111
Load/line supply connection		M10 connecting lugs	M10 connecting lugs	M10 connecting lugs	M10 connecting lugs
PE connection		Hole for M8	Hole for M10	Hole for M10	Hole for M10
Degree of protection		IP00	IP00	IP00	IP00
Dimensions					
• Width	mm (in)	360 (14.2)	390 (15.3)	425 (16.7)	505 (19.9)
• Height	mm (in)	240 (9.45)	265 (10.4)	265 (10.4)	265 (10.4)
• Depth	mm (in)	116 (4.57)	140 (5.51)	145 (5.71)	145 (5.71)
Weight, approx.	kg (lb)	12.7 (28)	19.9 (44)	25.9 (57)	28.9 (64)
Suitable for Smart Line Module in chassis format					
• Air-cooled	6SL3330-...	–	6TE35-5AA3	6TE37-3AA3	6TE41-1AA3 6TE41-3AA3 6TE41-7AA3
Suitable for Active Line Module in chassis format					
• Air-cooled	6SL3330-...	7TE32-1AA3 7TE32-6AA3	7TE33-8AA3 7TE35-0AA3	7TE36-1AA3 7TE37-5AA3	7TE38-4AA3 7TE41-0AA3 7TE41-2AA3 7TE41-4AA3

Line voltage 500 ... 690 V 3 AC		Line filter		
		6SL3760-0ME00-0AA0	6SL3760-0MN00-0AA0	6SL3760-0MG00-0AA0
Rated current	A	600	1025	1270
Power loss [1] At 50 Hz	kW	0.063	0.063	0.097
Load/line supply connection		M10 connecting lugs	M12 connecting lugs	M12 connecting lugs
PE connection		Hole for M10	Hole for M10	Hole for M10
Degree of protection		IP00	IP00	IP00
Dimensions				
• Width	mm (in)	400 (15.7)	425 (16.7)	505 (19.9)
• Height	mm (in)	365 (14.4)	365 (14.4)	365 (14.4)
• Depth	mm (in)	140 (5.51)	145 (5.71)	145 (5.71)
Weight, approx.	kg (lb)	27 (60)	36.7 (81)	36.7 (81)
Suitable for Smart Line Module in chassis format				
• Air-cooled	6SL3330-...	6TG35-5AA3	6TG38-8AA3 6TG41-2AA3	6TG41-7AA3
Suitable for Active Line Module in chassis format				
• Air-cooled	6SL3330-...	7TG35-8AA3	7TG37-4AA3 7TG41-0AA3	7TG41-3AA3

[1] The specified power loss represents the maximum value at 100 % utilization. The value is lower under normal operating conditions.

© Siemens AG 2017

Overview

With a high line short-circuit power (i.e. low line supply cable inductance) a line reactor is required in order to

- protect the drive converter itself from excessively high harmonic currents and therefore overload
- limit the harmonics to permissible values. The harmonic currents are limited by the complete inductance comprising the line reactor and line supply cable inductance.

For additional information, please refer to the SINAMICS Low Voltage Engineering Manual.

Selection and ordering data

Line reactors for SINAMICS S120 Power Modules

Suitable for Power Module in the chassis format, air-cooled 6SL3310-...	Suitable for Power Module in the chassis format, liquid-cooled 6SL3315-...	Type rating of the Power Modules at 400 V, 50 Hz (460 V, 60 Hz) kW (hp)	Rated input current of the Power Module A	**Line reactor** Article No.
Line voltage 380 … 480 V 3 AC				
1TE32-1AA3	1TE32-1AA3	110 (150)	229/230	**6SL3000-0CE32-3AA0**
1TE32-6AA3	1TE32-6AA3	132 (200)	284/285	**6SL3000-0CE32-8AA0**
1TE33-1AA3	1TE33-1AA3	160 (250)	338/340	**6SL3000-0CE33-3AA0**
1TE33-8AA3	–	200 (300)	395	**6SL3000-0CE35-1AA0**
1TE35-0AA3	1TE35-0AA3	250 (400)	509/540	

Line reactors for SINAMICS S120 Basic Line Modules

Suitable for Basic Line Module chassis format, air-cooled 6SL3330-...	Suitable for Basic Line Module chassis format, liquid-cooled 6SL3335-...	Rated power of the Basic Line Module at 400 V, 50 Hz (460 V, 60 Hz) or 690 V, 50 Hz (575 V, 60 Hz) kW (hp)	Rated input current of the Basic Line Module A	**Line reactor** Article No.
Line voltage 380 … 480 V 3 AC				
1TE34-2AA3	–	200 (305)	365	**6SL3000-0CE35-1AA0**
1TE35-3AA3	–	250 (385)	460	
–	1TE37-4AA3	360 (555)	610	**6SL3000-0CE36-3AA0**
1TE38-2AA3	–	400 (615)	710	**6SL3000-0CE37-7AA0**
1TE41-2AA3	–	560 (860)	1010	**6SL3000-0CE41-0AA0**
–	1TE41-2AA3	600 (925)	1000	
1TE41-5AA3	–	710 (1090)	1265	**6SL3000-0CE41-5AA0**
–	1TE41-7AA3	830 (1280)	1420	
1TE41-8AA3	–	900 (1390)	1581	**6SL3000-0CE41-6AA0**
Line voltage 500 … 690 V 3 AC				
1TG33-0AA3	–	250 (250)	260	**6SL3000-0CH32-7AA0**
–	1TG34-2AA3	355 (395)	340	**6SL3000-0CH33-4AA0**
1TG34-3AA3	–	355 (350)	375	**6SL3000-0CH34-8AA0**
1TG36-8AA3	–	560 (600)	575	**6SL3000-0CH36-0AA0**
–	1TG37-3AA3	630 (705)	600	
1TG41-1AA3	–	900 (900)	925	**6SL3000-0CH41-2AA0**
–	1TG41-3AA3	1100 (1230)	1070	
1TG41-4AA3	–	1100 (1250)	1180	
–	1TG41-7AA3	1370 (1530)	1350	**6SL3000-0CH41-6AA0**
1TG41-8AA3	–	1500 (1500)	1580	

© Siemens AG 2017

Selection and ordering data (continued)

Line reactors for SINAMICS S120 Smart Line Modules

Suitable for Smart Line Module in chassis format 6SL3330-...	Rated power of the Smart Line Module at 400 V, 50 Hz (460 V, 60 Hz) or 690 V, 50 Hz (575 V, 60 Hz) kW (hp)	Rated input current of the Smart Line Module A	**Line reactor** Article No.
Line voltage 380 ... 480 V 3 AC			
6TE35-5AA3	250 (385)	463	**6SL3000-0EE36-2AA0**
6TE37-3AA3	355 (545)	614	
6TE41-1AA3	500 (770)	883	**6SL3000-0EE38-8AA0**
6TE41-3AA3	630 (970)	1093	**6SL3000-0EE41-4AA0**
6TE41-7AA3	800 (1230)	1430	
Line voltage 500 ... 690 V 3 AC			
6TG35-5AA3	450 (50)	463	**6SL3000-0EH34-7AA0**
6TG38-8AA3	710 (790)	757	**6SL3000-0EH37-6AA0**
6TG41-2AA3	1000 (1115)	1009	**6SL3000-0EH41-4AA0**
6TG41-7AA3	1400 (1465)	1430	

Technical specifications

Line voltage 380 ... 480 V 3 AC		**Line reactor**					
		6SL3000-0CE32-3AA0	6SL3000-0CE32-8AA0	6SL3000-0CE33-3AA0	6SL3000-0CE35-1AA0	6SL3000-0CE36-3AA0	6SL3000-0CE37-7AA0
Rated current	A	224	278	331	508	628	773
Nominal inductance L_N	µH	76	62	52	42	27	22
Power loss [1] At 50 Hz	kW	0.274	0.247	0.267	0.365	0.368	0.351
Line/load connection		1 × hole for M10 Provided for busbar connection	1 × hole for M10 Provided for busbar connection	1 × hole for M10 Provided for busbar connection	1 × hole for M12 Provided for busbar connection	1 × hole for M12 Provided for busbar connection	1 × hole for M12 Provided for busbar connection
PE connection		M6 screw	M6 screw	M6 screw	M6 screw	M6 screw	M6 screw
Degree of protection		IP00	IP00	IP00	IP00	IP00	IP00
Dimensions							
• Width	mm (in)	270 (10.6)	270 (10.6)	270 (10.6)	300 (11.8)	300 (11.8)	300 (11.8)
• Height	mm (in)	248 (9.76)	248 (9.76)	248 (9.76)	269 (10.6)	269 (10.6)	269 (10.6)
• Depth	mm (in)	200 (7.87)	200 (7.87)	200 (7.87)	212 (8.35)	212 (8.35)	212 (8.35)
Weight, approx.	kg (lb)	24.5 (54)	26 (57)	27.8 (61)	38 (84)	41.4 (91)	51.3 (113)
Suitable for Power Module in chassis format							
• Air-cooled	6SL3310-...	1TE32-1AA3	1TE32-6AA3	1TE33-1AA3	1TE33-8AA3 1TE35-0AA3	–	–
• Liquid cooled	6SL3315-...	1TE32-1AA3	1TE32-6AA3	1TE33-1AA3	1TE35-0AA3	–	–
Suitable for Basic Line Module in chassis format							
• Air-cooled	6SL3330-...	–	–	–	1TE34-2AA3 1TE35-3AA3	–	1TE38-2AA3
• Liquid-cooled	6SL3335-...	–	–	–	–	1TE37-4AA3	–

[1] The specified power loss represents the maximum value at 100 % utilization. The value is lower under normal operating conditions.

© Siemens AG 2017

Technical specifications (continued)

Line voltage 380 ... 480 V 3 AC		Line reactor		
		6SL3000-0CE41-0AA0	6SL3000-0CE41-5AA0	6SL3000-0CE41-6AA0
Rated current	A	1022	1485	1600
Nominal inductance L_N	µH	16	13	13
Power loss [1] At 50 Hz	kW	0.498	0.776	0.606
Line/load connection		1 × hole for M12 Provided for busbar connection	1 × hole for M12 Provided for busbar connection	1 × hole for M12 Provided for busbar connection
PE connection		M6 screw	M6 screw	M6 screw
Degree of protection		IP00	IP00	IP00
Dimensions				
• Width	mm (in)	350 (13.8)	460 (18.1)	416 (16.4)
• Height	mm (in)	321 (12.6)	435 (17.1)	435 (17.1)
• Depth	mm (in)	211 (8.31)	235 (9.25)	235 (9.25)
Weight, approx.	kg (lb)	69.6 (153)	118 (260)	123 (271)
Suitable for Basic Line Module in chassis format				
• Air-cooled	6SL3330-...	1TE41-2AA3	1TE41-5AA3	1TE41-8AA3
• Liquid-cooled	6SL3335-...	1TE41-2AA3	1TE41-7AA3	–

Line voltage 380 ... 480 V 3 AC		Line reactor		
		6SL3000-0EE36-2AA0	6SL3000-0EE38-8AA0	6SL3000-0EE41-4AA0
Rated current	A	615	885	1430
Nominal inductance L_N	µH	55	35	25
Power loss [1] At 50 Hz	kW	0.56	0.81	1.08
Line/load connection		1 × hole for M10 Provided for busbar connection	2 × hole for M10 Provided for busbar connection	2 × hole for M10 Provided for busbar connection
PE connection		M6 thread	M6 thread	M6 thread
Degree of protection		IP00	IP00	IP00
Dimensions				
• Width	mm (in)	300 (11.8)	442 (17.4)	544 (21.4)
• Height	mm (in)	264 (10.4)	376 (14.8)	386 (15.2)
• Depth	mm (in)	203 (7.99)	263 (10.3)	232 (9.13)
Weight, approx.	kg (lb)	57 (126)	85.5 (189)	220 (485)
Suitable for Smart Line Module in chassis format				
• Air-cooled	6SL3330-...	6TE35-5AA3 6TE37-3AA3	6TE41-1AA3	6TE41-3AA3 6TE41-7AA3

[1] The specified power loss represents the maximum value at 100 % utilization. The value is lower under normal operating conditions.

© Siemens AG 2017

Technical specifications (continued)

Line voltage 500 ... 690 V 3 AC		Line reactor					
		6SL3000-0CH32-7AA0	6SL3000-0CH33-4AA0	6SL3000-0CH34-8AA0	6SL3000-0CH36-0AA0	6SL3000-0CH41-2AA0	6SL3000-0EH41-6AA0
Rated current	A	270	342	482	597	1167	1600
Nominal inductance L_N	µH	100	81	65	46	30	17
Power loss [1] At 50 Hz	kW	0.277	0.27	0.48	0.485	0.783	0.977
Line/load connection		1 × hole for M10 Provided for busbar connection	1 × hole for M10 Provided for busbar connection	1 × hole for M12 Provided for busbar connection	1 × hole for M12 Provided for busbar connection	2 × hole for M12 Provided for busbar connection	2 × hole for M12 Provided for busbar connection
PE connection		M6 screw	M6 screw	M6 screw	M6 screw	M6 screw	M6 screw
Degree of protection		IP00	IP00	IP00	IP00	IP00	IP00
Dimensions							
• Width	mm (in)	270 (10.6)	270 (10.6)	350 (13.8)	350 (13.8)	460 (18.1)	416 (16.4)
• Height	mm (in)	248 (9.76)	248 (9.76)	321 (12.6)	321 (12.6)	435 (17.1)	435 (17.1)
• Depth	mm (in)	200 (7.87)	200 (7.87)	232 (9.13)	232 (9.13)	235 (9.25)	250 (9.84)
Weight, approx.	kg (lb)	27.9 (62)	38.9 (86)	55.6 (123)	63.8 (141)	147 (324)	134 (295)
Suitable for Basic Line Module in chassis format							
• Air-cooled	6SL3330-...	1TG33-0AA3	–	1TG34-3AA3	1TG36-8AA3	1TG41-1AA3 1TG41-4AA3	1TG41-8AA3
• Liquid-cooled	6SL3335-...	–	1TG34-2AA3	–	1TG37-3AA3	1TG41-3AA3	1TG41-7AA3

Line voltage 500 ... 690 V 3 AC		Line reactor		
		6SL3000-0EH34-7AA0	6SL3000-0EH37-6AA0	6SL3000-0EH41-4AA0
Rated current	A	465	760	1430
Nominal inductance L_N	µH	115	70	40
Power loss [1] At 50 Hz	kW	0.82	0.95	1.85
Line/load connection		1 × hole for M10 Provided for busbar connection	2 × hole for M10 Provided for busbar connection	2 × hole for M10 Provided for busbar connection
PE connection		M6 nut	M6 nut	M6 nut
Degree of protection		IP00	IP00	IP00
Dimensions				
• Width	mm (in)	360 (14.2)	442 (17.4)	655 (25.8)
• Height	mm (in)	325 (12.8)	370 (14.6)	383 (15.1)
• Depth	mm (in)	229 (9.02)	303 (11.9)	288 (11.3)
Weight, approx.	kg (lb)	58 (128)	145 (320)	239 (527)
Suitable for Smart Line Module in chassis format				
• Air-cooled	6SL3330-...	6TG35-5AA3	6TG38-8AA3	6TG41-2AA3 6TG41-7AA3

[1] The specified power loss represents the maximum value at 100 % utilization. The value is lower under normal operating conditions.

© Siemens AG 2017

Selection and ordering data

Appropriate line-side power components are assigned depending on the power rating of the Power Modules, Basic Line Modules, Smart Line Modules or Active Line Modules.

Further information about the main contactors, switch disconnectors, fuses and circuit breakers is provided in the Catalogs IC 10 and LV 10.

Assignment of line-side power components to air-cooled and liquid-cooled Power Modules in chassis format

Type rating at 400 V, 50 Hz (460 V, 60 Hz)	Rated input current		Suitable for Power Module in the chassis format	Main contactor	**Switch disconnector without handle and shaft**	**Switch disconnector with handle and shaft**
	Air-cooled	Liquid-cooled				
kW (hp)	A	A	6SL3310-... [1] 6SL3315-... [2]	Article No.	Article No.	Article No.
Line voltage 380 ... 480 V 3 AC						
110 (150)	229	230	1TE32-1AA3	**3RT1064-6AP36**	**3KL5530-1AB01**	**3KL5530-1GB01**
132 (200)	284	285	1TE32-6AA3	**3RT1065-6AP36**	**3KL5730-1AB01**	**3KL5730-1GB01**
160 (250)	338	340	1TE33-1AA3	**3RT1066-6AP36**	–	
200 (300)	395	–	1TE33-8AA3	**3RT1075-6AP36**	–	
250 (400)	509	540	1TE35-0AA3	**3RT1076-6AP36**	**3KL6130-1AB02**	**3KL6130-1GB02**

Type rating at 400 V, 50 Hz (460 V, 60 Hz)	Rated input current		Suitable for Power Module in the chassis format	**Cable protection fuse**		**Cable protection fuse incl. Semiconductor protection**	
	Air-cooled	Liquid-cooled		Rated current		Rated current	
kW (hp)	A	A	6SL3310-... [1] 6SL3315-... [2]	A	Article No.	A	Article No.
Line voltage 380 ... 480 V 3 AC							
110 (150)	229	230	1TE32-1AA3	250	**3NA3144**	315	**3NE1230-2**
132 (200)	284	285	1TE32-6AA3	300	**3NA3250**	350	**3NE1331-2**
160 (250)	338	340	1TE33-1AA3	355	**3NA3254**	450	**3NE1333-2**
200 (300)	395	–	1TE33-8AA3	400	**3NA3260**		
250 (400)	509	540	1TE35-0AA3	630	**3NA3372**	2 × 315/630	**3NE1230-2** or **3NE1436-2**

[1] 6SL3310-… is the air-cooled version.
[2] 6SL3315-… is the liquid-cooled version.

© Siemens AG 2017

Selection and ordering data (continued)

Assignment of line-side power components to air-cooled and liquid-cooled Basic Line Modules in chassis format

Rated output at 400 V, 50 Hz (460 V, 60 Hz) or 690 V, 50 Hz (575 V, 60 Hz) kW (hp)	Rated input current A	Suitable for Basic Line Module	**Main contactor** Type	**Fixed-mounted circuit breaker** Article No.	**Switch disconnector without handle and shaft** Article No.	**Switch disconnector with handle and shaft** Article No.
Line voltage 380 ... 480 V 3 AC						
200 (305)	365	6SL3330-1TE34-2AA3 [1]	**3RT1075-...**	–	**3KL6130-1AB02**	**3KL6130-1GB02**
250 (385)	460	6SL3330-1TE35-3AA3 [1]	**3RT1076-...**	–	**3KL6130-1AB02**	**3KL6130-1GB02**
360 (555)	610	6SL3335-1TE37-4AA3 [2]	**3RT1076-...**	–	**3KL6130-1AB02**	**3KL6130-1GB02**
400 (615)	710	6SL3330-1TE38-2AA3 [1]	**3RT1066-...** (3 units)	–	**3KL6230-1AB02**	**3KL6230-1GB02** [3]
560 (860)	1010	6SL3330-1TE41-2AA3 [1]	–	**3WL1112-2BB34-4AN2-Z C22** [4]	–	–
600 (925)	1000	6SL3335-1TE41-2AA3 [2]	–	**3WL1112-2BB34-4AN2-Z C22** [4]	–	–
710 (1090)	1265	6SL3330-1TE41-5AA3 [1]	–	**3WL1116-2BB34-4AN2-Z C22** [4]	–	–
830 (1280)	1420	6SL3335-1TE41-7AA3 [2]	–	**3WL1116-2BB34-4AN2-Z C22** [4]	–	–
900 (1390)	1630	6SL3330-1TE41-8AA3 [1]	–	**3WL1220-2BB34-4AN2-Z C22** [4]	–	–
Line voltage 500 ... 690 V 3 AC						
250 (250)	260	6SL3330-1TG33-0AA3 [1]	**3RT1066-...**	–	**3KL5730-1AB01**	**3KL5730-1GB01**
355 (350/395)	375	6SL3330-1TG34-3AA3 [1]	**3RT1075-…**	–	**3KL6130-1AB02**	**3KL6130-1GB02**
	340	6SL3335-1TG34-2AA3 [2]				
560 (600)	575	6SL3330-1TG36-8AA3 [1]	**3RT1076-…**	–	**3KL6130-1AB02**	**3KL6130-1GB02**
630 (705)	600	6SL3335-1TG37-3AA3 [2]	**3RT1076-…**	–	**3KL6130-1AB02**	**3KL6130-1GB02**
900 (900)	925	6SL3330-1TG41-1AA3 [1]	–	**3WL1210-4BB34-4AN2-Z C22** [4]	–	–
1100 (1250/1230)	1180	6SL3330-1TG41-4AA3 [1]	–	**3WL1212-4BB34-4AN2-Z C22** [4]	–	–
	1070	6SL3335-1TG41-3AA3 [2]				
1370 (1530)	1350	6SL3335-1TG41-7AA3 [2]	–	**3WL1216-4BB34-4AN2-Z C22** [4]	–	–
1500 (1500)	1580	6SL3330-1TG41-8AA3 [1]	–	**3WL1220-4BB34-4AN2-Z C22** [4]	–	–

[1] 6SL3330-… is the air-cooled version.
[2] 6SL3335-… is the liquid-cooled version.
[3] Suitable only for 3NE1 fuses up to size 3.
[4] The breakers must always be switched ON and OFF by the sequence control. An interlocking set 3WL9111-0BA21-0AA0 as described in Catalog LV 10 should be provided for the circuit breakers in order to exclude the risk of unintentional manual operation. Manual operation bypasses the pre-charging circuit and can therefore destroy the Line Module.

© Siemens AG 2017

Selection and ordering data (continued)

Rated output at 400 V, 50 Hz (460 V, 60 Hz) or 690 V, 50 Hz (575 V, 60 Hz)	Rated input current	Suitable for Basic Line Module	Cable protection fuse		Cable protection fuse incl. Semiconductor protection	
			Rated current		Rated current	
kW (hp)	A		A	Article No.	A	Article No.
Line voltage 380 ... 480 V 3 AC						
200 (305)	365	6SL3330-1TE34-2AA3 [1]	500	**3NA3365**	450	**3NE1333-2**
250 (385)	460	6SL3330-1TE35-3AA3 [1]	630	**3NA3372**	500	**3NE1334-2**
360 (555)	610	6SL3335-1TE37-4AA3 [2]	2 × 315	**3NA3352** (2 units)	2 × 450	**3NE1333-2** (2 units)
400 (610)	710	6SL3330-1TE38-2AA3 [1]	800	**3NA3475**	800	**3NE1438-2**
560 (860)	1010	6SL3330-1TE41-2AA3 [1]	1250	**3NA3482**	2 × 560	**3NE1435-2** (2 units)
600 (925)	1000	6SL3335-1TE41-2AA3 [2]	2 × 500	**3NA3365** (2 units)	2 × 560	**3NE1435-2** (2 units)
710 (1090)	1265	6SL3330-1TE41-5AA3 [1]	2 × 800	**3NA3475** (2 units)	2 × 710	**3NE1437-2** (2 units)
830 (1280)	1420	6SL3335-1TE41-7AA3 [2]	3 × 500	**3NA3365** (3 units)	2 × 800	**3NE1438-2** (2 units)
900 (1390)	1630	6SL3330-1TE41-8AA3 [1]	3 × 630	**3NA3372** (3 units)	3 × 630	**3NE1436-2** (3 units)
Line voltage 500 ... 690 V 3 AC						
250 (250)	260	6SL3330-1TG33-0AA3 [1]	315	**3NA3252-6**	315	**3NE1230-2**
355 (350/395)	375	6SL3330-1TG34-3AA3 [1]	500	**3NA3365-6**	450	**3NE1333-2**
	340	6SL3335-1TG34-2AA3 [2]	355	**3NA3354-6**		
560 (600)	575	6SL3330-1TG36-8AA3 [1]	2 × 315	**3NA3252-6** (2 units)	630	**3NE1436-2**
630 (705)	600	6SL3335-1TG37-3AA3 [2]	2 × 300	**3NA3250-6** (2 units)	2 × 350	**3NE1331-2** (2 units)
900 (900)	925	6SL3330-1TG41-1AA3 [1]	2 × 500	**3NA3365-6** (2 units)	2 × 500	**3NE1334-2** (2 units)
1100 (1250/1230)	1180	6SL3330-1TG41-4AA3 [1]	3 × 500	**3NA3365-6** (3 units)	2 × 630	**3NE1436-2** (2 units)
	1070	6SL3335-1TG41-3AA3 [2]	3 × 400	**3NA3360-6** (3 units)	2 × 670	**3NE1447-2** (2 units)
1370 (1530)	1350	6SL3335-1TG41-7AA3 [2]	3 × 500	**3NA3365-6** (3 units)	3 × 560	**3NE1435-2** (3 units)
1500 (1500)	1580	6SL3330-1TG41-8AA3 [1]	4 × 500	**3NA3365-6** (4 units)	3 × 630	**3NE1436-2** (3 units)

Power components for the pre-charging circuit of the Basic Line Module in chassis format, frame size GD

Rated output at 400 V, 50 Hz (460 V, 60 Hz) or 690 V, 50 Hz (575 V, 60 Hz)	Rated input current	Suitable for Basic Line Module	Pre-charging resistors		Pre-charging contactor	Cable protection fuse for pre-charging arm	
			Pre-charging current [3]			Rated current	
kW (hp)	A	6SL3330-...	A	Article No.	Type	A	Article No.
Line voltage 380 ... 480 V 3 AC							
900 (1390)	1630	1TE41-8AA3	91 [4] 182 [5]	**6SL3000-0KE12-2AA0**	**3RT1034-... [4]** **3RT1044-... [5]**	50 100	**3NE1817-0 [4]** **3NE1021-0 [5]**
Line voltage 500 ... 690 V 3 AC							
1500 (1500)	1580	1TG41-8AA3	86 [4] 172 [5]	**6SL3000-0KH14-0AA0**	**3RT1034-... [4]** **3RT1044-... [5]**	50 100	**3NE1817-0 [4]** **3NE1021-0 [5]**

Note:

The dimension drawings of the pre-charging resistors are to be found in the dimension drawing collection for Catalog D 21.3 in the Information and Download Center (www.siemens.com/industry/infocenter).

[1] 6SL3330-… is the air-cooled version.

[2] 6SL3335-… is the liquid-cooled version.

[3] Line current present at the start of the pre-charging process (initial rms value).

[4] With one pre-charging resistor per phase.

[5] With two pre-charging resistors connected in parallel per phase.

© Siemens AG 2017

Selection and ordering data (continued)

Assignment of line-side power components to Smart Line Modules in chassis format

Rated output at 400 V, 50 Hz (460 V, 60 Hz) or 690 V, 50 Hz (575 V, 60 Hz)	Rated input current	Suitable for Smart Line Module	**Main contactor**	**Fixed-mounted circuit breaker**	**Switch disconnector without handle and shaft**	**Switch disconnector with handle and shaft**
kW (hp)	A	6SL3330-...	Article No.	Article No.	Article No.	Article No.
Line voltage 380 ... 480 V 3 AC						
250 (385)	463	6TE35-5AA3	**3RT1476-6AP36**	–	**3KL6130-1AB02**	**3KL6130-1GB02**
355 (545)	614	6TE37-3AA3	**3RT1476-6AP36**	–	**3KL6230-1AB02**	**3KL6230-1GB02**
500 (770)	883	6TE41-1AA3	–	**3WL1210-4CB34-4AN2-Z C22** [1]	–	–
630 (970)	1093	6TE41-3AA3	–	**3WL1212-4CB34-4AN2-Z C22** [1]	–	–
800 (1230)	1430	6TE41-7AA3	–	**3WL1216-4CB34-4AN2-Z C22** [1]	–	–
Line voltage 500 ... 690 V 3 AC						
450 (500)	463	6TG35-5AA3	**3RT1466-6AP36**	–	**3KL6130-1AB02**	**3KL6130-1GB02**
710 (790)	757	6TG38-8AA3	**3RT1466-6AP36** (3 units)	–	**3KL6230-1AB02**	**3KL6230-1GB02**
1000 (1115)	1009	6TG41-2AA3	–	**3WL1212-4CB34-4AN2-Z C22** [1]	–	–
1400 (1465)	1430	6TG41-7AA3	–	**3WL1216-4CB34-4AN2-Z C22** [1]	–	–

Rated output at 400 V, 50 Hz (460 V, 60 Hz) or 690 V, 50 Hz (575 V, 60 Hz)	Rated input current	Suitable for Smart Line Module	**Cable protection fuse**		**Cable protection fuse incl. semiconductor protection**	
			Rated current		Rated current	
kW (hp)	A	6SL3330-...	A	Article No.	A	Article No.
Line voltage 380 ... 480 V 3 AC						
250 (385)	463	6TE35-5AA3	500	**3NA3365**	560	**3NE1435-2**
355 (545)	614	6TE37-3AA3	630	**3NA3372**	710	**3NE1437-2**
500 (770)	883	6TE41-1AA3	1000	**3NA3480**	2 × 500	**3NE1334-2** (2 units)
630 (970)	1093	6TE41-3AA3	1250	**3NA3482**	2 × 630	**3NE1436-2** (2 units)
800 (1230)	1430	6TE41-7AA3	2 × 800	**3NA3475** (2 units)	2 × 850	**3NE1448-2** (2 units)
Line voltage 500 ... 690 V 3 AC						
450 (500)	463	6TG35-5AA3	500	**3NA3365-6**	560	**3NE1435-2**
710 (790)	757	6TG38-8AA3	2 × 400	**3NA3360-6** (2 units)	850	**3NE1448-2**
1000 (1115)	1009	6TG41-2AA3	3 × 355	**3NA3354-6** (3 units)	2 × 560	**3NE1435-2** (2 units)
1400 (1465)	1430	6TG41-7AA3	3 × 500	**3NA3365-6** (3 units)	2 × 850	**3NE1448-2** (2 units)

[1] The breakers must always be switched ON and OFF by the sequence control. An interlocking set 3WL9111-0BA21-0AA0 as described in Catalog LV 10 should be provided for the circuit breakers in order to exclude the risk of unintentional manual operation. Manual operation bypasses the pre-charging circuit and can therefore destroy the Line Module.

© Siemens AG 2017

Selection and ordering data (continued)

Assignment of line-side power components to air-cooled and liquid-cooled Active Line Modules or Active Interface Modules in chassis format

Rated output at 400 V, 50 Hz (460 V, 60 Hz) or 690 V, 50 Hz (575 V, 60 Hz) kW (hp)	Rated input current A	Suitable for Active Interface Module	Suitable for Active Line Module	**Bypass contactor** Article No.
Line voltage 380 ... 480 V 3 AC				
132 (200)	210	6SL3300-7TE32-6AA0	6SL3330-7TE32-1AA3	Included in Active Interface Module
160 (250)	260	6SL3300-7TE32-6AA0	6SL3330-7TE32-6AA3	Included in Active Interface Module
235 (400)	380	6SL3300-7TE33-8AA0	6SL3330-7TE33-8AA3	Included in Active Interface Module
300 (500)	490	6SL3300-7TE35-0AA0	6SL3330-7TE35-0AA3 6SL3335-7TE35-0AA3	Included in Active Interface Module
380 (600)	605	6SL3300-7TE38-4AA0	6SL3330-7TE36-1AA3 6SL3335-7TE36-1AA3	**3RT1476-6AP36**
500 (700)	840	6SL3300-7TE38-4AA0	6SL3330-7TE38-4AA3 6SL3335-7TE38-4AA3	**3WL1110-2BB34-4AN2-Z C22** [1]
630 (900)	985	6SL3300-7TE41-4AA0	6SL3330-7TE41-0AA3 6SL3335-7TE41-0AA3	**3WL1112-2BB34-4AN2-Z C22** [1]
800 (1000)	1260	6SL3300-7TE41-4AA0	6SL3330-7TG37-4AA3	**3WL1116-2BB34-4AN2-Z C22** [1]
900 (1250)	1405	6SL3300-7TE41-4AA0 6SL3305-7TE41-4AA3	6SL3330-7TE41-4AA3 6SL3335-7TE41-4AA3	**3WL1116-2BB34-4AN2-Z C22** [1]
Line voltage 500 ... 690 V 3 AC				
630 (675)	575	6SL3300-7TG35-8AA0	6SL3330-7TG35-8AA3 6SL3335-7TG35-8AA3	**3RT1476-6AP36**
800 (900)	735	6SL3300-7TG37-4AA0 6SL3305-7TG37-4AA3	6SL3330-7TG37-4AA3 6SL3335-7TG37-4AA3	**3RT1476-6AP36** (3 units)
900 (975)	810	6SL3300-7TG41-3AA0	6SL3335-7TG38-1AA3	**3WL1110-2BB34-4AN2-Z C22** [1]
1100 (1250)	1025	6SL3300-7TG41-3AA0 6SL3305-7TG41-0AA3	6SL3330-7TG41-0AA3 6SL3335-7TG41-0AA3	**3WL1112-2BB34-4AN2-Z C22** [1]
1400 (1500)	1270	6SL3300-7TG41-3AA0 6SL3305-7TG41-3AA3	6SL3330-7TG41-3AA3 6SL3335-7TG41-3AA3	**3WL1116-2BB34-4AN2-Z C22** [1]
1700 (1880)	1560	6SL3305-7TG41-6AA3	6SL3335-7TG41-6AA3	**3WL1116-2BB34-4AN2-Z C22** [1]

[1] The breakers must always be switched ON and OFF by the sequence control. An interlocking set 3WL9111-0BA21-0AA0 as described in Catalog LV 10 should be provided for the circuit breakers in order to exclude the risk of unintentional manual operation. Manual operation bypasses the pre-charging circuit and can therefore destroy the Line Module.

© Siemens AG 2017

Selection and ordering data (continued)

Rated output at 400 V, 50 Hz (460 V, 60 Hz) or 690 V, 50 Hz (575 V, 60 Hz)	Rated input current	Suitable for Active Interface Module	Suitable for Active Line Module	**Switch disconnector without handle and shaft**	**Switch disconnector with handle and shaft**	**Cable protection fuse**		**Cable protection fuse incl. semiconductor protection**	
						Rated current		Rated current	
kW (hp)	A	6SL3300-... 6SL3305-...	6SL3330-... 6SL3335-...	Article No.	Article No.	A	Article No.	A	Article No.
Line voltage 380 ... 480 V 3 AC									
132 (200)	210	7TE32-6AA0	7TE32-1AA3	**3KL5530-1AB01**	**3KL5530-1GB01**	315	**3NA3252**	315	**3NE1230-2**
160 (250)	260	7TE32-6AA0	7TE32-6AA3	**3KL5730-1AB01**	**3KL5730-1GB01**	355	**3NA3254**	350	**3NE1331-2**
235 (400)	380	7TE33-8AA0	7TE33-8AA3	**3KL5730-1AB01**	**3KL5730-1GB01**	500	**3NA3365**	500	**3NE1334-2**
300 (500)	490	7TE35-0AA0	7TE35-0AA3 7TE35-0AA3 [1]	**3KL6130-1AB02**	**3KL6130-1GB02**	630	**3NA3372**	630	**3NE1436-2**
380 (600)	605	7TE38-4AA0	7TE36-1AA3 7TE36-1AA3 [1]	**3KL6230-1AB02**	**3KL6230-1GB02**	800	**3NA3475**	800	**3NE1438-2**
500 (700)	840	7TE38-4AA0	7TE38-4AA3 7TE38-4AA3 [1]	–	–	2 × 425	**3NA3362** (2 units)	2 × 500	**3NE1334-2** (2 units)
630 (900)	985	7TE41-4AA0	7TE41-0AA3 7TE41-0AA3 [1]	–	–	2 × 500	**3NA3365** (2 units)	2 × 630	**3NE1436-2** (2 units)
800 (1000)	1260	7TE41-4AA0	7TE41-2AA3	–	–	3 × 425	**3NA3362** (2 units)	2 × 850	**3NE1448-2** (2 units)
900 (1250)	1405	7TE41-4AA0 7TE41-4AA3 [1]	7TE41-4AA3 7TE41-4AA3 [1]	–	–	3 × 500	**3NA3365** (2 units)	2 × 850	**3NE1448-2** (2 units)
Line voltage 500 ... 690 V 3 AC									
560/630 (675)	575	7TG35-8AA0	7TG35-8AA3 7TG35-8AA3 [1]	**3KL6130-1AB02**	**3KL6130-1GB02**	2 × 315	**3NA3352-6** (2 units)	670	**3NE1447-2**
800 (900)	735	7TG37-4AA0 7TG37-4AA3 [1]	7TG37-4AA3 7TG37-4AA3 [1]	**3KL6230-1AB02**	**3KL6230-1GB02**	2 × 400	**3NA3360-6** (2 units)	850	**3NE1448-2**
900 (975)	810	7TG41-3AA0	7TG38-1AA3 [1]	–	–	2 × 500	**3NA3365-6** (2 units)	2 x 560	**3NE1435-2** (2 units)
1100 (1280)	1025	7TG41-3AA0 7TG41-0AA3 [1]	7TG41-0AA3 7TG41-0AA3 [1]	–	–	3 × 355	**3NA3354-6** (3 units)	2 × 630	**3NE1436-2** (2 units)
1400 (1500)	1270	7TG41-3AA0 7TG41-3AA3 [1]	7TG41-3AA3 7TG41-3AA3 [1]	–	–	3 × 500	**3NA3365-6** (3 units)	2 × 800	**3NE1438-2** (2 units)
1700 (1880)	1560	7TG41-6AA3 [1]	7TG41-6AA3 [1]	–	–	4 x 850	**3NA3365-6** (4 units)	3 x 630	**3NE1436-2** (3 units)

[1] Liquid-cooled version, 6SL3305-... or 6SL3335-...

© Siemens AG 2017

Overview

A Braking Module and the matching external braking resistor are required to bring drives to a controlled standstill in the event of a power failure (e.g. with an EMERGENCY STOP) or to limit the DC link voltage for brief periods of regenerative operation, e.g. if the Line Module is not capable of energy recovery.

The Braking Module includes the power electronics and the associated control circuit. During operation, the DC link energy is converted to heat loss in an external braking resistor.

The Braking Module works independently of the converter control.

Several Braking Modules can be operated in parallel, but a separate braking resistor must be connected to each Braking Module.

Braking Modules are designed to be integrated into air-cooled Motor Modules, Line Modules or Power Modules and are cooled by the fans on these modules. The supply voltage for the electronics is taken from the DC link. The Braking Modules are connected to the DC link by means of the busbar sets included in the scope of supply or flexible cables and, in the case of Basic Line Modules of frame size GB or GD, using a separate cable harness set.

The activation threshold of the Braking Module can be adjusted by means of a DIP switch. The braking power values specified in the technical specifications apply to the upper activation threshold.

Design

The Braking Modules have the following interfaces as standard:

- 1 DC link connection
- 1 braking resistor connection
- 1 digital input (block Braking Module / acknowledge error)
- 1 digital output (Braking Module inhibited)
- 1 DIP switch for adjusting the activation threshold

Information about Braking Module activation thresholds and other notes are included in the SINAMICS Low Voltage Engineering Manual.

Selection and ordering data

Rated power P_{DB} kW	Peak power P_{15} kW	Frame size	**Braking Module** Article No.
Line voltage 380 ... 480 V 3 AC DC link voltage 510 ... 720 V DC			
25	125	FX/FB	**6SL3300-1AE31-3AA0**
50	250	GX/GB/GD	**6SL3300-1AE32-5AA0**
50	250	HX/JX	**6SL3300-1AE32-5BA0**
Line voltage 500 ... 600 V 3 AC DC link voltage 675 ... 900 V DC			
25	125	FX/FB	**6SL3300-1AF31-3AA0**
50	250	GX/GB/GD	**6SL3300-1AF32-5AA0**
50	250	HX/JX	**6SL3300-1AF32-5BA0**
Line voltage 660 ... 690 V 3 AC DC link voltage 890 ... 1035 V DC			
25	125	FX/FB	**6SL3300-1AH31-3AA0**
50	250	GX/GB/GD	**6SL3300-1AH32-5AA0**
50	250	HX/JX	**6SL3300-1AH32-5BA0**

Description	Article No.
Accessories	
Cable harness set for mounting a Braking Module of frame size GX into a Basic Line Module of frame size GB or GD	**6SL3366-2NG00-0AA0**

© Siemens AG 2017

Integration

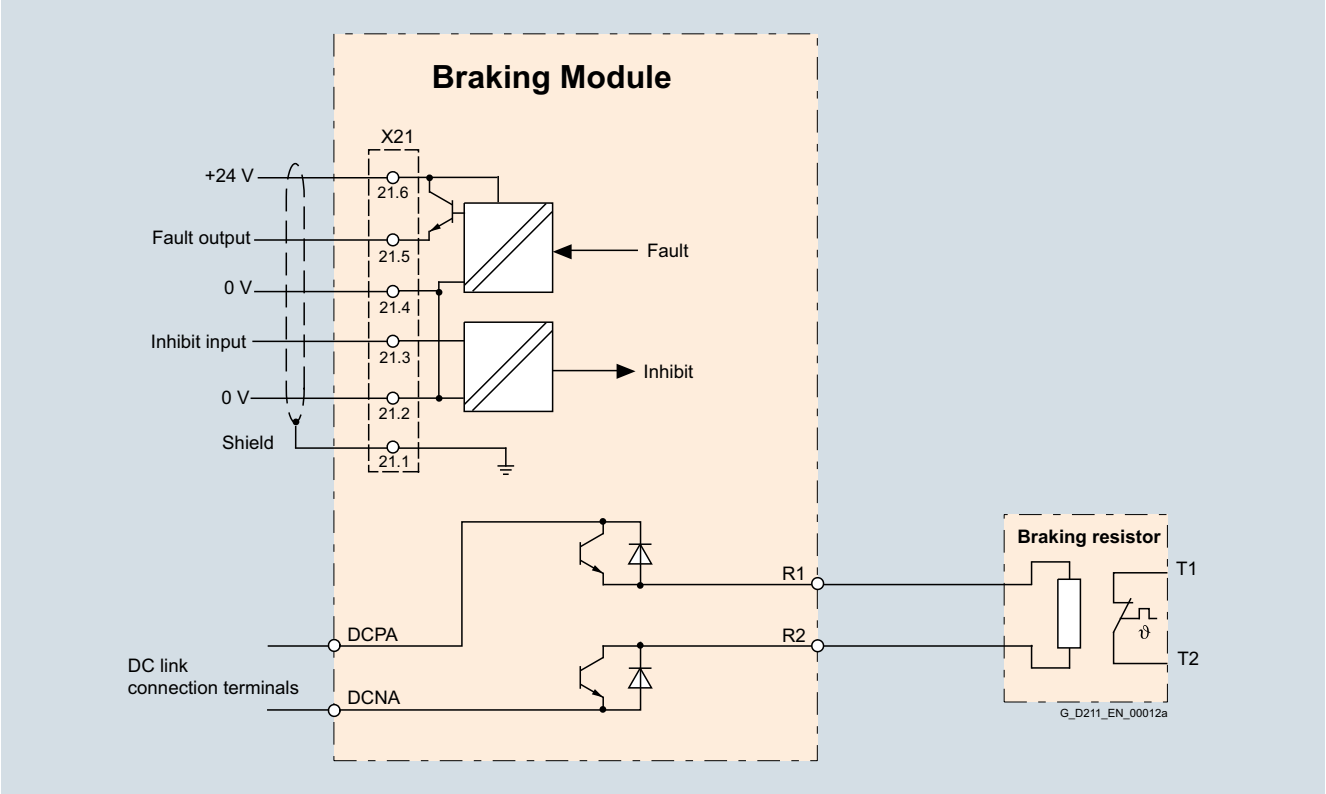

Connection example of a Braking Module

Characteristic curves

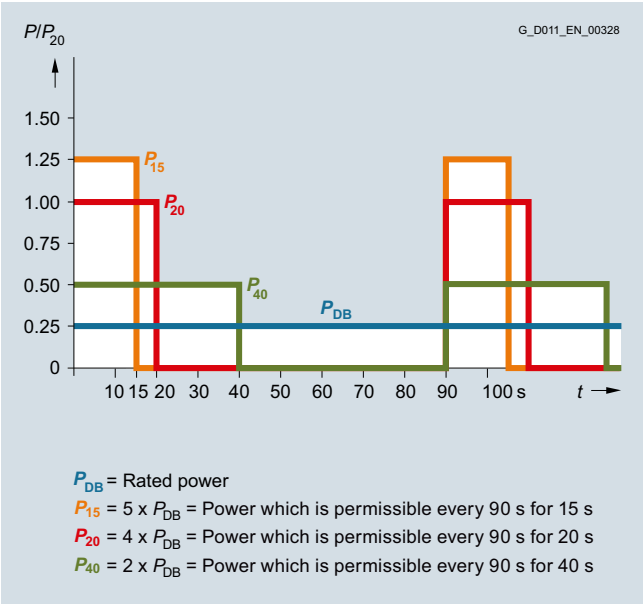

Load diagram for Braking Modules and braking resistor

© Siemens AG 2017

Technical specifications

Line voltage 380 ... 480 V 3 AC **DC link voltage 510 ... 720 V DC**		**Braking Module**		
		6SL3300-1AE31-3AA0	6SL3300-1AE32-5AA0	6SL3300-1AE32-5BA0
Power				
• Rated power P_{DB}	kW	25	50	50
• Peak power P_{15}	kW	125	250	250
• Power P_{20}	kW	100	200	200
• Power P_{40}	kW	50	100	100
Activation thresholds (adjustable via DIP switch)	V	774 (factory setting) or 673	774 (factory setting) or 673	774 (factory setting) or 673
Digital inputs in accordance with IEC 61131-2 Type 1				
• Voltage	V	24 DC	24 DC	24 DC
• Low level (an open digital input is interpreted as "low")	V	-3 ... +5	-3 ... +5	-3 ... +5
• High level	V	15 ... 30	15 ... 30	15 ... 30
• Current consumption at 24 V DC, typ.	mA	10	10	10
• Conductor cross-section, max.	mm^2	1.5	1.5	1.5
Digital outputs sustained-short-circuit-proof				
• Voltage	V	24 DC	24 DC	24 DC
• Load current per digital output, max.	mA	500	500	500
• Conductor cross-section, max.	mm^2	1.5	1.5	1.5
R1/R2 connection		M8 nut	M8 nut	M8 nut
• Conductor cross-section, max.	mm^2	35	50	50
Weight, approx.	kg (lb)	3.6 (7.9)	7.3 (16.1)	7.5 (16.5)
Suitable for installation in air-cooled Power Modules, Line Modules or Motor Modules				
• Air-cooled	Frame size	FX/FB	GX/GB/GD [1]	HX/JX

Line voltage 500 ... 600 V 3 AC **DC link voltage 675 ... 900 V DC**		**Braking Module**		
		6SL3300-1AF31-3AA0	6SL3300-1AF32-5AA0	6SL3300-1AF32-5BA0
Power				
• Rated power P_{DB}	kW	25	50	50
• Peak power P_{15}	kW	125	250	250
• Power P_{20}	kW	100	200	200
• Power P_{40}	kW	50	100	100
Activation thresholds (adjustable via DIP switch)	V	967 (factory setting) or 841	967 (factory setting) or 841	967 (factory setting) or 841
Digital inputs in accordance with IEC 61131-2 Type 1				
• Voltage	V	24 DC	24 DC	24 DC
• Low level (an open digital input is interpreted as "low")	V	-3 ... +5	-3 ... +5	-3 ... +5
• High level	V	15 ... 30	15 ... 30	15 ... 30
• Current consumption at 24 V DC, typ.	mA	10	10	10
• Conductor cross-section, max.	mm^2	1.5	1.5	1.5
Digital outputs sustained-short-circuit-proof				
• Voltage	V	24 DC	24 DC	24 DC
• Load current per digital output, max.	mA	500	500	500
• Conductor cross-section, max.	mm^2	1.5	1.5	1.5
R1/R2 connection		M8 nut	M8 nut	M8 nut
• Conductor cross-section, max.	mm^2	35	50	50
Weight, approx.	kg (lb)	3.6 (7.9)	7.3 (16.1)	7.5 (16.5)
Suitable for installation in air-cooled Power Modules, Line Modules or Motor Modules				
• Air-cooled	Frame size	FX/FB	GX/GB/GD [1]	HX/JX

[1] Cable harness set 6SL3366-2NG00-0AA0 is required to connect the Braking Module to a Basic Line Module of frame size GB or GD.

© Siemens AG 2017

Technical specifications (continued)

Line voltage 660 ... 690 V 3 AC **DC link voltage 890 ... 1035 V DC**		**Braking Module**		
		6SL3300-1AH31-3AA0	6SL3300-1AH32-5AA0	6SL3300-1AH32-5BA0
Power				
• Rated power P_{DB}	kW	25	50	50
• Peak power P_{15}	kW	125	250	250
• Power P_{20}	kW	100	200	200
• Power P_{40}	kW	50	100	100
Activation thresholds (adjustable via DIP switch)	V	1158 (factory setting) or 1070	1158 (factory setting) or 1070	1158 (factory setting) or 1070
Digital inputs in accordance with IEC 61131-2 Type 1				
• Voltage	V	24 DC	24 DC	24 DC
• Low level (an open digital input is interpreted as "low")	V	-3 ... +5	-3 ... +5	-3 ... +5
• High level	V	15 ... 30	15 ... 30	15 ... 30
• Current consumption at 24 V DC, typ.	mA	10	10	10
• Conductor cross-section, max.	mm^2	1.5	1.5	1.5
Digital outputs sustained-short-circuit-proof				
• Voltage	V	24 DC	24 DC	24 DC
• Load current per digital output, max.	mA	500	500	500
• Conductor cross-section, max.	mm^2	1.5	1.5	1.5
R1/R2 connection		M8 nut	M8 nut	M8 nut
• Conductor cross-section, max.	mm^2	35	50	50
Weight, approx.	kg (lb)	3.6 (7.9)	7.3 (16.1)	7.5 (16.5)
Suitable for installation in air-cooled Power Modules, Line Modules or Motor Modules				
• Air-cooled	Frame size	FX/FB	GX/GB/GD [1]	HX/JX

[1] Cable harness set 6SL3366-2NG00-0AA0 is required to connect the Braking Module to a Basic Line Module of frame size GB or GD.

© Siemens AG 2017

Overview

Excess energy in the DC link is dissipated via the braking resistor.

The braking resistor is connected to a Braking Module.

By positioning the braking resistor outside the cabinet or switchgear room, it is possible to extract the heat losses away from the Line Modules / Motor Modules. This reduces the level of air conditioning required.

The maximum permissible cable length between the Braking Module and braking resistor is 100 m (328 ft).

Two braking resistors with different rated and peak power values are available for the devices.

The braking resistor is monitored on the basis of the duty cycle. A temperature switch (NC contact) is also fitted. This responds when the maximum permissible temperature is exceeded and can be evaluated by a controller.

Information about possible duty cycles of the braking resistors and other notes are included in the SINAMICS Low Voltage Engineering Manual.

Selection and ordering data

Rated power P_{DB} kW	Suitable for Braking Module 6SL3300-...	**Braking resistor** Article No.
Line voltage 380 ... 480 V 3 AC DC link voltage 510 ... 720 V DC		
25	1AE31-3AA0	**6SL3000-1BE31-3AA0**
50	1AE32-5 . A0	**6SL3000-1BE32-5AA0**
Line voltage 500 ... 600 V 3 AC DC link voltage 675 ... 900 V DC		
25	1AF31-3AA0	**6SL3000-1BF31-3AA0**
50	1AF32-5 . A0	**6SL3000-1BF32-5AA0**
Line voltage 660 ... 690 V 3 AC DC link voltage 890 ... 1035 V DC		
25	1AH31-3AA0	**6SL3000-1BH31-3AA0**
50	1AH32-5 . A0	**6SL3000-1BH32-5AA0**

Characteristic curves

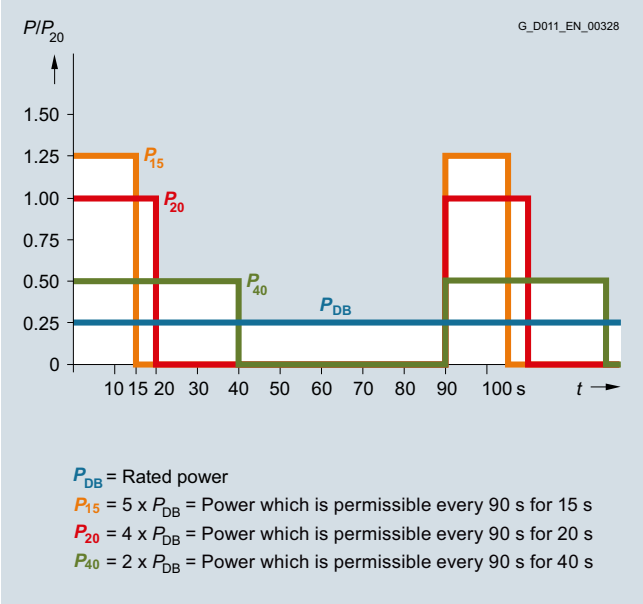

Load diagram for Braking Modules and braking resistors

© Siemens AG 2017

Technical specifications

Line voltage 380 ... 480 V 3 AC DC link voltage 510 ... 720 V DC		Braking resistor	
		6SL3000-1BE31-3AA0	6SL3000-1BE32-5AA0
Resistance	Ω	4.4 (±7.5 %)	2.2 (±7.5 %)
Rated power P_{DB} (continuous braking power)	kW	25	50
Power P_{15}	kW	125	250
Power P_{20}	kW	100	200
Power P_{40}	kW	50	100
Current, max.	A	189	378
Power connection		M10 stud	M10 stud
• Conductor cross section, max. (IEC)	mm^2	50	70
Degree of protection		IP20	IP20
Dimensions			
• Width	mm (in)	740 (29.1)	810 (31.9)
• Height	mm (in)	605 (23.8)	1325 (52.2)
• Depth	mm (in)	486 (19.1)	486 (19.1)
Weight, approx.	kg (lb)	50 (110)	120 (265)
Suitable for Braking Module	Type	6SL3300-1AE31-3AA0	6SL3300-1AE32-5 . A0

Line voltage 500 ... 600 V 3 AC DC link voltage 675 ... 900 V DC		Braking resistor	
		6SL3000-1BF31-3AA0	6SL3000-1BF32-5AA0
Resistance	Ω	6.8 (±7.5 %)	3.4 (±7.5 %)
Rated power P_{DB} (continuous braking power)	kW	25	50
Power P_{15}	kW	125	250
Power P_{20}	kW	100	200
Power P_{40}	kW	50	100
Current, max.	A	189	378
Power connection		M10 stud	M10 stud
• Conductor cross section, max. (IEC)	mm^2	50	70
Degree of protection		IP20	IP20
Dimensions			
• Width	mm (in)	740 (29.1)	810 (31.9)
• Height	mm (in)	605 (23.8)	1325 (52.2)
• Depth	mm (in)	486 (19.1)	486 (19.1)
Weight, approx.	kg (lb)	50 (110)	120 (265)
Suitable for Braking Module	Type	6SL3300-1AF31-3AA0	6SL3300-1AF32-5 . A0

Line voltage 660 ... 690 V 3 AC DC link voltage 890 ... 1035 V DC		Braking resistor	
		6SL3000-1BH31-3AA0	6SL3000-1BH32-5AA0
Resistance	Ω	9.8 (±7.5 %)	4.9 (±7.5 %)
Rated power P_{DB} (continuous braking power)	kW	25	50
Power P_{15}	kW	125	250
Power P_{20}	kW	100	200
Power P_{40}	kW	50	100
Current, max.	A	125	255
Power connection		M10 stud	M10 stud
• Conductor cross section, max. (IEC)	mm^2	50	70
Degree of protection		IP20	IP20
Dimensions			
• Width	mm (in)	740 (29.1)	810 (31.9)
• Height	mm (in)	605 (23.8)	1325 (52.2)
• Depth	mm (in)	486 (19.1)	486 (19.1)
Weight, approx.	kg (lb)	50 (110)	120 (265)
Suitable for Braking Module	Type	6SL3300-1AH31-3AA0	6SL3300-1AH32-5 . A0

© Siemens AG 2017

Overview

Suitable DC link fuses are assigned depending on the power rating of the Motor Modules.

Further information about the fuses listed is provided in the Catalogs IC 10 and LV 10.

Assignment of the DC link fuses to the Motor Modules chassis format, liquid-cooled

Type rating at 400 V, 50 Hz (460 V, 60 Hz)	Rated DC link current for power supplied via Basic Line Module / Active Line Module	Suitable for Motor Module chassis format	**DC link fuse according to IEC**				**DC link fuse according to UL [1]**			
			Rated current	Quantity/ Phase	Frame size		Rated current	Quantity/ Phase	Frame size	
kW (hp)	A	6SL3325-...	A			Article No.	A			Article No.
Line voltage 380 V ... 480 V 3 AC										
110 (150)	256/230	1TE32-1AA3	315	1	1	**3NE3230-0B**	315	1	1	**3NE3230-0B**
							315	1	2L	**3NB1231-4KK11**
132 (200)	317/287	1TE32-6AA3	400	1	1	**3NE3232-0B**	400	1	1	**3NE3232-0B**
							400	1	2L	**3NB1234-4KK11**
160 (250)	380/340	1TE33-1AA3	450	1	1	**3NE3233**	450	1	1	**3NE3233**
							500	1	3L	**3NB1337-4KK11**
250 (400)	600/538	1TE35-0AA3	630	1	2	**3NE3236**	630	1	2	**3NE3236**
							800	1	3L	**3NB1345-4KK11**
315 (500)	738/664	1TE36-1AA3	800	1	2	**3NE3338-8**	800	1	2	**3NE3338-8**
							800	1	3L	**3NB2345-4KK16**
400 (600)	894/805	1TE37-5AA3	500	2	2	**3NE3334-0B**	1000	1	3L	**3NB2350-4KK16**
450 (700)	1025/922	1TE38-4AA3	560	2	2	**3NE3335**	560	2	2	**3NE3335**
							1000	1	3L	**3NB2350-4KK16**
560 (800)	1202/1080	1TE41-0AA3	630	2	2	**3NE3336**	630	2	2	**3NE3336**
							1400	1	3L	**3NB2355-4KK16**
710 (1000)	1512/1361	1TE41-2AA3	900	2	2	**3NE3340-8**	2100	1	3L	**3NB2364-4KK17**
800 (1150)	1714/1544	1TE41-4AA3	900	2	2	**3NE3340-8**	900	2	2	**3NE3340-8**
							2100	1	3L	**3NB2364-4KK17**
800 (1000)	1550/1403	1TE41-4AS3 [2]	900	2	2	**3NE3340-8**	2100	1	3L	**3NB2364-4KK17**

[1] To achieve a UL-approved system, it is absolutely essential to use the fuse types specified in the table.

[2] This Motor Module has been specifically designed for loads demanding a high dynamic performance.

© Siemens AG 2017

Overview (continued)

Type rating at 690 V, 50 Hz (575 V, 60 Hz)	Rated DC link current for power supplied via Basic Line Module / Active Line Module	Suitable for Motor Module chassis format	**DC link fuse according to IEC**				**DC link fuse according to UL [1]**			
			Rated current	Quantity/ Phase	Frame size		Rated current	Quantity/ Phase	Frame size	
kW (hp)	A	6SL3325-...	A			Article No.	A			Article No.
Line voltage 500 … 690 V 3 AC										
90 (75)	122/110	1TG31-0AA3	160	1	1	**3NE3224**	160	1	1	**3NE3224**
							200	1	1L	**3NB1126-4KK11**
132 (150)	183/165	1TG31-5AA3	200	1	1	**3NE3225**	200	1	1	**3NE3225**
							250	1	1L	**3NB1128-4KK11**
200 (200)	263/237	1TG32-2AA3	315	1	1	**3NE3230-0B**	315	1	1	**3NE3230-0B**
							315	1	2L	**3NB1231-4KK11**
315 (300)	403/363	1TG33-3AA3	450	1	2	**3NE3233**	450	1	2	**3NE3233**
							500	1	3L	**3NB1337-4KK11**
450 (450)	558/502	1TG34-7AA3	630	1	2	**3NE3336**	800	1	3L	**3NB1345-4KK11**
560 (600)	702/632	1TG35-8AA3	400	2	1	**3NE3232-0B**	400	2	1	**3NE3232-0B**
							800	1	3L	**3NB2345-4KK16**
710 (700)	903/759	1TG37-4AA3	560	2	2	**3NE3335**	1000	1	3L	**3NB2350-4KK16**
800 (800)	990/891	1TG38-0AA3 [2]	560	2	2	**3NE3335**	1000	1	3L	**3NB2350-4KK16**
800 (800)	990/891	1TG38-1AA3	560	2	2	**3NE3335**	560	2	2	**3NE3335**
							1000	1	3L	**3NB2350-4KK16**
1000 (1000)	1250/1125	1TG41-0AA3	710	2	2	**3NE3337-8**	710	2	2	**3NE3337-8**
							1600	1	3L	**3NB2357-4KK16**
1200 (1250)	1550/1395	1TG41-3AA3	900	2	2	**3NE3340-8**	900	2	2	**3NE3340-8**
							2100	1	3L	**3NB2364-4KK17**
1500 (1500)	1903/1605	1TG41-6AA3	710	3	2	**3NE3337-8**	2400	1	3L	**3NB2366-4KK17**

[1] To achieve a UL-approved system, it is absolutely essential to use the fuse types specified in the table.

[2] Device 6SL3325-1TG38-0AA3 is optimized for a base pulse frequency of 1.25 kHz, for an increased pulse frequency, the derating factor is higher than for the device 6SL3325-1TG38-1AA3.

© Siemens AG 2017

Overview

Motor reactors reduce the voltage load on the motor windings by reducing the voltage gradients at the motor terminals that occur during converter operation. At the same time, the capacitive charge/discharge currents that place an additional load on the converter output when long motor cables are used, are reduced. For group drives, output reactors should always be used. The maximum permissible output frequency when a motor reactor is used is 150 Hz.

The motor reactor must be installed as close as possible to the Motor Module or Power Module. Up to two motor reactors can be connected in series.

Motor reactors are approved for use only in conjunction with Vector and V/f control modes.

For additional notes on the use of motor reactors, please refer to the SINAMICS Low Voltage Configuration Manual.

Selection and ordering data

Suitable for Power Module		Suitable for Motor Module		Type rating at 400 V, 50 Hz (460 V, 60 Hz)/ 690 V, 50 Hz (575 V, 60 Hz)	Rated output current	**Motor reactor**
Air-cooled	Liquid-cooled	Air-cooled	Liquid-cooled	kW (hp)	A	Article No.
Line voltage 380 ... 480 V 3 AC						
6SL3310-1TE32-1AA3	6SL3315-1TE32-1AA3	6SL3320-1TE32-1AA3	6SL3325-1TE32-1AA3	110 (150)	210	**6SL3000-2BE32-1AA0**
6SL3310-1TE32-6AA3	6SL3315-1TE32-6AA3	6SL3320-1TE32-6AA3	6SL3325-1TE32-6AA3	132 (200)	260	**6SL3000-2BE32-6AA0**
6SL3310-1TE33-1AA3	6SL3315-1TE33-1AA3	6SL3320-1TE33-1AA3	6SL3325-1TE33-1AA3	160 (250)	310	**6SL3000-2BE33-2AA0**
6SL3310-1TE33-8AA3	–	6SL3320-1TE33-8AA3	–	200 (300)	380	**6SL3000-2BE33-8AA0**
6SL3310-1TE35-0AA3	6SL3315-1TE35-0AA3	6SL3320-1TE35-0AA3	6SL3325-1TE35-0AA3	250 (400)	490	**6SL3000-2BE35-0AA0**
–	–	6SL3320-1TE36-1AA3	6SL3325-1TE36-1AA3	315 (500)	605	**6SL3000-2AE36-1AA0**
–	–	6SL3320-1TE37-5AA3	6SL3325-1TE37-5AA3	400 (600)	745	**6SL3000-2AE38-4AA0**
–	–	6SL3320-1TE38-4AA3	6SL3325-1TE38-4AA3	450 (700)	840	
–	–	6SL3320-1TE41-0AA3	6SL3325-1TE41-0AA3	560 (800)	985	**6SL3000-2AE41-0AA0**
–	–	6SL3320-1TE41-2AA3	6SL3325-1TE41-2AA3	710 (1000)	1260	**6SL3000-2AE41-4AA0**
–	–	6SL3320-1TE41-4AA3	6SL3325-1TE41-4AA3	800 (1150)	1405	
			6SL3325-1TE41-4AS3 [1]	800 (1000)	1330	
Line voltage 500 ... 690 V 3 AC						
–	–	6SL3320-1TG28-5AA3	–	75 (75)	85	**6SL3000-2AH31-0AA0**
–	–	6SL3320-1TG31-0AA3	6SL3325-1TG31-0AA3	90 (75)	100	
–	–	6SL3320-1TG31-2AA3	–	110 (100)	120	**6SL3000-2AH31-5AA0**
–	–	6SL3320-1TG31-5AA3	6SL3325-1TG31-5AA3	132 (150)	150	
–	–	6SL3320-1TG31-8AA3	–	160 (150)	175	**6SL3000-2AH31-8AA0**
–	–	6SL3320-1TG32-2AA3	6SL3325-1TG32-2AA3	200 (200)	215	**6SL3000-2AH32-4AA0**
–	–	6SL3320-1TG32-6AA3	–	250 (250)	260	**6SL3000-2AH32-6AA0**
–	–	6SL3320-1TG33-3AA3	6SL3325-1TG33-3AA3	315 (300)	330	**6SL3000-2AH33-6AA0**
–	–	6SL3320-1TG34-1AA3	–	400 (400)	410	**6SL3000-2AH34-5AA0**
–	–	6SL3320-1TG34-7AA3	6SL3325-1TG34-7AA3	450 (450)	465	**6SL3000-2AH34-7AA0**
–	–	6SL3320-1TG35-8AA3	6SL3325-1TG35-8AA3	560 (600)	575	**6SL3000-2AH35-8AA0**
–	–	6SL3320-1TG37-4AA3	6SL3325-1TG37-4AA3	710 (700)	735	**6SL3000-2AH38-1AA0**
–	–	6SL3320-1TG38-1AA3	6SL3325-1TG38-0AA3 6SL3325-1TG38-1AA3	800 (800)	810	
–	–	6SL3320-1TG38-8AA3	–	900 (900)	910	**6SL3000-2AH41-0AA0**
–	–	6SL3320-1TG41-0AA3	6SL3325-1TG41-0AA3	1000 (1000)	1025	**6SL3000-2AH41-1AA0**
–	–	6SL3320-1TG41-3AA3	6SL3325-1TG41-3AA3	1200 (1250)	1270	**6SL3000-2AH41-3AA0**

[1] This Motor Module has been specifically designed for loads demanding a high dynamic performance.

© Siemens AG 2017

Technical specifications

Line voltage 380 ... 480 V 3 AC		**Motor reactor (for pulse frequencies of 2 kHz to 4 kHz)**									
		6SL3000-2BE32-1AA0		6SL3000-2BE32-6AA0		6SL3000-2BE33-2AA0		6SL3000-2BE33-8AA0		6SL3000-2BE35-0AA0	
Rated current	A	210		260		310		380		490	
Power loss, max. [1]	kW	0.486		0.5		0.47		0.5		0.5	
Load connection		1 × hole for M10		1 × hole for M10		1 × hole for M10		1 × hole for M10		1 × hole for M12	
PE connection		M8 screw		M8 screw		M8 screw		M8 screw		M8 screw	
Cable length, max. between the motor reactor and motor											
(number of reactors in series)		(1)	(2)	(1)	(2)	(1)	(2)	(1)	(2)	(1)	(2)
• Shielded	m (ft)	300 (984)	525 (1723)	300 (984)	525 (1723)	300 (984)	525 (1723)	300 (984)	525 (1723)	300 (984)	525 (1723)
• Unshielded	m (ft)	450 (1476)	787 (2582)	450 (1476)	787 (2582)	450 (1476)	787 (2582)	450 (1476)	787 (2582)	450 (1476)	787 (2582)
Degree of protection		IP00		IP00		IP00		IP00		IP00	
Dimensions											
• Width	mm (in)	300 (11.8)		300 (11.8)		300 (11.8)		300 (11.8)		300 (11.8)	
• Height	mm (in)	285 (11.2)		315 (12.4)		285 (11.2)		285 (11.2)		365 (14.4)	
• Depth	mm (in)	257 (10.1)		277 (10.9)		257 (10.1)		277 (10.9)		277 (10.9)	
Weight, approx.	kg (lb)	66 (146)		66 (146)		66 (146)		73 (161)		100 (220)	
Suitable for Power Module		6SL3310-1TE32-1AA3 6SL3315-1TE32-1AA3		6SL3310-1TE32-6AA3 6SL3315-1TE32-6AA3		6SL3310-1TE33-1AA3 6SL3315-1TE33-1AA3		6SL3310-1TE33-8AA3		6SL3310-1TE35-0AA3 6SL3315-1TE35-0AA3	
Suitable for Motor Module		6SL3320-1TE32-1AA3 6SL3325-1TE32-1AA3		6SL3320-1TE32-6AA3 6SL3325-1TE32-6AA3		6SL3320-1TE33-1AA3 6SL3325-1TE33-1AA3		6SL3320-1TE33-8AA3		6SL3320-1TE35-0AA3 6SL3325-1TE35-0AA3	
• Rated current of Motor Module or Power Module	A	210		260		310		380		490	
• Type rating of Motor Module or Power Module	kW	110		132		160		200		250	

Line voltage 380 ... 480 V 3 AC		**Motor reactor (for pulse frequencies of 1.25 kHz to 2.5 kHz)**											
		6SL3000-2AE36-1AA0		6SL3000-2AE38-4AA0				6SL3000-2AE41-0AA0		6SL3000-2AE41-4AA0			
Rated current	A	605		745		840		985		1260		1405	
Power loss, max. [1]	kW	0.9		0.84		0.943		1.062		0.9		1.054	
Load connection		1 × hole for M12		1 × hole for M12		1 × hole for M12		1 × hole for M12		2 × hole for M12		2 × hole for M12	
PE connection		M10 screw		M10 screw		M10 screw		M10 screw		M10 screw		M10 screw	
Cable length, max. between the motor reactor and motor													
(number of reactors in series)		(1)	(2)	(1)	(2)	(1)	(2)	(1)	(2)	(1)	(2)	(1)	(2)
• Shielded	m (ft)	300 (984)	525 (1723)	300 (984)	525 (1723)	300 (984)	525 (1723)	300 (984)	525 (1723)	300 (984)	525 (1723)	300 (984)	525 (1723)
• Unshielded	m (ft)	450 (1476)	787 (2582)	450 (1476)	787 (2582)	450 (1476)	787 (2582)	450 (1476)	787 (2582)	450 (1476)	787 (2582)	450 (1476)	787 (2582)
Degree of protection		IP00		IP00		IP00		IP00		IP00		IP00	
Dimensions													
• Width	mm (in)	410 (16.1)		410 (16.1)		410 (16.1)		410 (16.1)		460 (18.1)		460 (18.1)	
• Height	mm (in)	392 (15.4)		392 (15.4)		392 (15.4)		392 (15.4)		392 (15.4)		392 (15.4)	
• Depth	mm (in)	292 (11.5)		292 (11.5)		292 (11.5)		302 (11.9)		326 (12.8)		326 (12.8)	
Weight, approx.	kg (lb)	130 (287)		140 (309)		140 (309)		146 (322)		179 (395)		179 (395)	
Suitable for Motor Module		6SL3320-1TE36-1AA3 6SL3325-1TE36-1AA3		6SL3320-1TE37-5AA3 6SL3325-1TE37-5AA3		6SL3320-1TE38-4AA3 6SL3325-1TE38-4AA3		6SL3320-1TE41-0AA3 6SL3325-1TE41-0AA3		6SL3320-1TE41-2AA3 6SL3325-1TE41-2AA3		6SL3320-1TE41-4AA3 6SL3325-1TE41-4AA3 6SL3325-1TE41-4AS3 [2]	
• Rated current of the Motor Module	A	605		745		840		985		1260		1405	
• Type rating of the Motor Module	kW	315		400		450		560		710		800	

[1] The specified power loss represents the maximum value at 100 % utilization. The value is lower under normal operating conditions.

[2] This Motor Module has been specifically designed for loads demanding a high dynamic performance.

© Siemens AG 2017

Technical specifications (continued)

Line voltage 500 ... 690 V 3 AC		Motor reactor (for pulse frequencies of 1.25 kHz to 2.5 kHz)											
		6SL3000-2AH31-0AA0				6SL3000-2AH31-5AA0				6SL3000-2AH31-8AA0		6SL3000-2AH32-4AA0	
Rated current	A	85		100		120		150		175		215	
Power loss, max. [1]	kW	0.257		0.3		0.318		0.335		0.4		0.425	
Load connection		Flat connector for M10 screw		Flat connector for M10 screw		Flat connector for M10 screw		Flat connector for M10 screw		Flat connector for M10 screw		Flat connector for M10 screw	
PE connection		M6 screw		M6 screw		M6 screw		M6 screw		M6 screw		M6 screw	
Cable length, max. between the motor reactor and motor													
(number of reactors in series)		(1)	(2)	(1)	(2)	(1)	(2)	(1)	(2)	(1)	(2)	(1)	(2)
• Shielded	m (ft)	300 (984)	525 (1723)	300 (984)	525 (1723)	300 (984)	525 (1723)	300 (984)	525 (1723)	300 (984)	525 (1723)	300 (984)	525 (1723)
• Unshielded	m (ft)	450 (1476)	787 (2582)	450 (1476)	787 (2582)	450 (1476)	787 (2582)	450 (1476)	787 (2582)	450 (1476)	787 (2582)	450 (1476)	787 (2582)
Degree of protection		IP00		IP00		IP00		IP00		IP00		IP00	
Dimensions													
• Width	mm (in)	270 (10.6)		270 (10.6)		270 (10.6)		270 (10.6)		300 (11.8)		300 (11.8)	
• Height	mm (in)	248 (9.76)		248 (9.76)		248 (9.76)		248 (9.76)		285 (11.2)		285 (11.2)	
• Depth	mm (in)	200 (7.87)		200 (7.87)		200 (7.87)		200 (7.87)		212 (8.35)		212 (8.35)	
Weight, approx.	kg (lb)	25 (55)		25 (55)		25.8 (56.9)		25.8 (56.9)		34 (75)		34 (75)	
Suitable for Motor Module		6SL3320-1TG28-5AA3		6SL3320-1TG31-0AA3 6SL3325-1TG31-0AA3		6SL3320-1TG31-2AA3		6SL3320-1TG31-5AA3 6SL3325-1TG31-5AA3		6SL3320-1TG31-8AA3		6SL3320-1TG32-2AA3 6SL3325-1TG32-2AA3	
• Rated current of the Motor Module	A	85		100		120		150		175		215	
• Type rating of the Motor Module	kW	75		90		110		132		160		200	

Line voltage 500 ... 690 V 3 AC		Motor reactor (for pulse frequencies of 1.25 kHz to 2.5 kHz)											
		6SL3000-2AH32-6AA0		6SL3000-2AH33-6AA0		6SL3000-2AH34-5AA0		6SL3000-2AH34-7AA0		6SL3000-2AH35-8AA0		6SL3000-2AH38-1AA0	
Rated current	A	260		330		410		465		575		735	
Power loss, max. [1]	kW	0.44		0.45		0.545		0.72		0.8		0.96	
Load connection		Flat connector for M10 screw		Flat connector for M10 screw		Flat connector for M12 screw		Flat connector for M12 screw		Flat connector for M12 screw		Flat connector for M12 screw	
PE connection		M6 screw		M6 screw		M8 screw		M8 screw		M8 screw		M8 screw	
Cable length, max. between the motor reactor and motor													
(number of reactors in series)		(1)	(2)	(1)	(2)	(1)	(2)	(1)	(2)	(1)	(2)	(1)	(2)
• Shielded	m (ft)	300 (984)	525 (1723)	300 (984)	525 (1723)	300 (984)	525 (1723)	300 (984)	525 (1723)	300 (984)	525 (1723)	300 (984)	525 (1723)
• Unshielded	m (ft)	450 (1476)	787 (2582)	450 (1476)	787 (2582)	450 (1476)	787 (2582)	450 (1476)	787 (2582)	450 (1476)	787 (2582)	450 (1476)	787 (2582)
Degree of protection		IP00		IP00		IP00		IP00		IP00		IP00	
Dimensions													
• Width	mm (in)	300 (11.8)		300 (11.8)		350 (13.8)		410 (16.1)		410 (16.1)		410 (16.1)	
• Height	mm (in)	285 (11.2)		285 (11.2)		330 (13.0)		392 (15.4)		392 (15.4)		392 (15.4)	
• Depth	mm (in)	212 (8.35)		212 (8.35)		215 (8.46)		292 (11.5)		292 (11.5)		279 (11.0)	
Weight, approx.	kg (lb)	40 (88)		46 (101)		68 (150)		80 (176)		80 (176)		146 (322)	
Suitable for Motor Module		6SL3320-1TG32-6AA3		6SL3320-1TG33-3AA3 6SL3325-1TG33-3AA3		6SL3320-1TG34-1AA3		6SL3320-1TG34-7AA3 6SL3325-1TG34-7AA3		6SL3320-1TG35-8AA3 6SL3325-1TG35-8AA3		6SL3320-1TG37-4AA3 6SL3325-1TG37-4AA3	
• Rated current of the Motor Module	A	260		330		410		465		575		735	
• Type rating of the Motor Module	kW	250		315		400		450		560		710	

[1] The specified power loss represents the maximum value at 100 % utilization. The value is lower under normal operating conditions.

© Siemens AG 2017

Technical specifications (continued)

Line voltage 500 ... 690 V 3 AC		**Motor reactor (for pulse frequencies of 1.25 kHz to 2.5 kHz)**							
		6SL3000-2AH38-1AA0		6SL3000-2AH41-0AA0		6SL3000-2AH41-1AA0		6SL3000-2AH41-3AA0	
Rated current	A	810		910		1025		1270	
Power loss, max. [1]	kW	1.0		0.97		1.05		0.95	
Load connection		Flat connector for M12 screw		Flat connector for M12 screw		Flat connector for M12 screw		Flat connector for M12 screw	
PE connection		M8 screw		M8 screw		M8 screw		M8 screw	
Cable length, max. between the motor reactor and motor									
(number of reactors in series)		(1)	(2)	(1)	(2)	(1)	(2)	(1)	(2)
• Shielded	m (ft)	300 (984)	525 (1723)	300 (984)	525 (1723)	300 (984)	525 (1723)	300 (984)	525 (1723)
• Unshielded	m (ft)	450 (1476)	787 (2582)	450 (1476)	787 (2582)	450 (1476)	787 (2582)	450 (1476)	787 (2582)
Degree of protection		IP00		IP00		IP00		IP00	
Dimensions									
• Width	mm (in)	410 (16.1)		410 (16.1)		410 (16.1)		460 (18.1)	
• Height	mm (in)	392 (15.4)		392 (15.4)		392 (15.4)		392 (15.4)	
• Depth	mm (in)	279 (11.0)		279 (11.0)		317 (12.5)		296 (11.6)	
Weight, approx.	kg (lb)	146 (322)		150 (331)		163 (359)		153 (337)	
Suitable for Motor Module		6SL3320-1TG38-1AA3 6SL3325-1TG38-0AA3 6SL3325-1TG38-1AA3		6SL3320-1TG38-8AA3		6SL3320-1TG41-0AA3 6SL3325-1TG41-0AA3		6SL3320-1TG41-3AA3 6SL3325-1TG41-3AA3	
• Rated current of the Motor Module	A	810		910		1025		1270	
• Type rating of the Motor Module	kW	800		900		1000		1200	

[1] The specified power loss represents the maximum value at 100 % utilization.
The value is lower under normal operating conditions.

© Siemens AG 2017

Overview

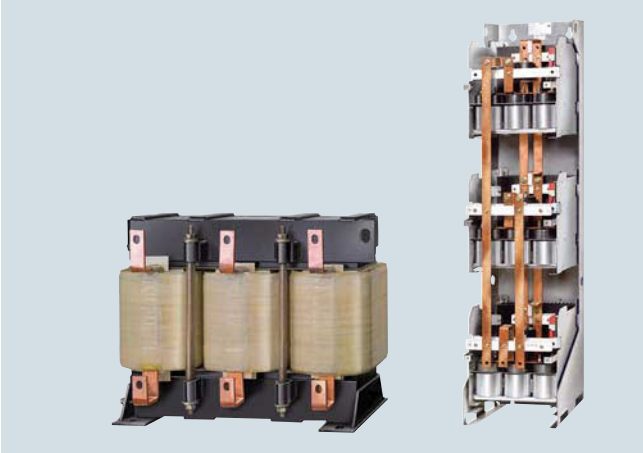

dv/dt filter plus VPL (**V**oltage **P**eak **L**imiter) limit the voltage rate-of-rise dv/dt to values < 500 V/µs and the typical voltage peaks to the following values in accordance with the limit value curve according to IEC/TS 60034-17: 2006:

< 1000 V at U_{line} < 575 V

< 1250 V at 660 V < U_{line} < 690 V

Standard motors with standard insulation and without insulated bearings with a supply voltage of up to 690 V can be used for converter operation if a dv/dt filter plus VPL is used.

dv/dt filters plus VPL are designed for the following maximum motor cable lengths:

- Shielded cables: 300 m (328 ft) (e.g. Protodur NYCWY)
- Unshielded cables: 450 m (1476 ft) (e.g. Protodur NYY)

For shorter cable lengths (100 m shielded, 150 m (492 ft) unshielded), see also dv/dt filter compact plus VPL.

Notice:

The maximum permissible cable length between the dv/dt filter plus VPL and the Power Module/Motor Module is 5 m (16.4 ft).

Design

The dv/dt filter plus VPL consists of two components, which are also supplied as separate mechanical units:

- dv/dt reactor
- Voltage limiting network, which cuts off the voltage peaks and feeds the energy back to the DC link

© Siemens AG 2017

Selection and ordering data

Suitable for Power Module		Suitable for Motor Module		Type rating at 400 V, 50 Hz (460 V, 60 Hz)/ 690 V, 50 Hz (575 V, 60 Hz)	Rated output current	**dv/dt filter plus VPL**
Air-cooled	Liquid-cooled	Air-cooled	Liquid-cooled	kW (hp)	A	Article No.
Line voltage 380 ... 480 V 3 AC						
6SL3310-1TE32-1AA3	6SL3315-1TE32-1AA3	6SL3320-1TE32-1AA3	6SL3325-1TE32-1AA3	110 (150)	210	**6SL3000-2DE32-6AA0**
6SL3310-1TE32-6AA3	6SL3315-1TE32-6AA3	6SL3320-1TE32-6AA3	6SL3325-1TE32-6AA3	132 (200)	260	
6SL3310-1TE33-1AA3	6SL3315-1TE33-1AA3	6SL3320-1TE33-1AA3	6SL3325-1TE33-1AA3	160 (250)	310	**6SL3000-2DE35-0AA0**
6SL3310-1TE33-8AA3	–	6SL3320-1TE33-8AA3	–	200 (300)	380	
6SL3310-1TE35-0AA3	6SL3315-1TE35-0AA3	6SL3320-1TE35-0AA3	6SL3325-1TE35-0AA3	250 (400)	490	
–	–	6SL3320-1TE36-1AA3	6SL3325-1TE36-1AA3	315 (500)	605	**6SL3000-2DE38-4AA0**
–	–	6SL3320-1TE37-5AA3	6SL3325-1TE37-5AA3	400 (600)	745	
–	–	6SL3320-1TE38-4AA3	6SL3325-1TE38-4AA3	450 (700)	840	
–	–	6SL3320-1TE41-0AA3	6SL3325-1TE41-0AA3	560 (800)	985	**6SL3000-2DE41-4AA0**
–	–	6SL3320-1TE41-2AA3	6SL3325-1TE41-2AA3	710 (1000)	1260	
–	–	6SL3320-1TE41-4AA3	6SL3325-1TE41-4AA3	800 (1150)	1405	
			6SL3325-1TE41-4AS3 [1]	800 (1000)	1330	
Line voltage 500 ... 690 V 3 AC						
–	–	6SL3320-1TG28-5AA3	–	75 (75)	85	**6SL3000-2DH31-0AA0**
–	–	6SL3320-1TG31-0AA3	6SL3325-1TG31-0AA3	90 (75)	100	
–	–	6SL3320-1TG31-2AA3	–	110 (100)	120	**6SL3000-2DH31-5AA0**
–	–	6SL3325-1TG31-5AA3	6SL3320-1TG31-5AA3	132 (150)	150	
–	–	6SL3320-1TG31-8AA3	–	160 (150)	175	**6SL3000-2DH32-2AA0**
–	–	6SL3320-1TG32-2AA3	6SL3325-1TG32-2AA3	200 (200)	215	
–	–	6SL3320-1TG32-6AA3	–	250 (250)	260	**6SL3000-2DH33-3AA0**
–	–	6SL3320-1TG33-3AA3	6SL3325-1TG33-3AA3	315 (300)	330	
–	–	6SL3320-1TG34-1AA3	–	400 (400)	410	**6SL3000-2DH34-1AA0**
–	–	6SL3320-1TG34-7AA3	6SL3325-1TG34-7AA3	450 (450)	465	**6SL3000-2DH35-8AA0**
–	–	6SL3320-1TG35-8AA3	6SL3325-1TG35-8AA3	560 (600)	575	
–	–	6SL3320-1TG37-4AA3	6SL3325-1TG37-4AA3	710 (700)	735	**6SL3000-2DH38-1AA0**
–	–	6SL3320-1TG38-1AA3	6SL3325-1TG38-0AA3 6SL3325-1TG38-1AA3	800 (800)	810	
–	–	6SL3320-1TG38-8AA3	–	900 (900)	910	**6SL3000-2DH41-3AA0**
–	–	6SL3320-1TG41-0AA3	6SL3325-1TG41-0AA3	1000 (1000)	1025	
–	–	6SL3320-1TG41-3AA3	6SL3325-1TG41-3AA3	1200 (1250)	1270	

[1] This Motor Module has been specifically designed for loads demanding a high dynamic performance.

© Siemens AG 2017

Technical specifications

Line voltage 380 ... 480 V 3 AC		**dv/dt filter plus VPL**			
		6SL3000-2DE32-6AA0	6SL3000-2DE35-0AA0	6SL3000-2DE38-4AA0	6SL3000-2DE41-4AA0
$I_{th\ max}$	A	260	490	840	1405
Degree of protection		IP00	IP00	IP00	IP00
Cable length, max. between dv/dt filter and motor [1]					
• Shielded	m (ft)	300 (984)	300 (984)	300 (984)	300 (984)
• Unshielded	m (ft)	450 (1476)	450 (1476)	450 (1476)	450 (1476)
Conformity		CE	CE	CE	CE
Certificate of suitability		cURus	cURus	cURus	cURus
dv/dt reactor					
Power loss, max. [2]					
• At 50 Hz 400 V	kW	0.701	0.874	1.106	1.111
• At 60 Hz 460 V	kW	0.729	0.904	1.115	1.154
• At 150 Hz 400 V	kW	0.78	0.963	1.226	1.23
Connections					
• To the Power Module/ Motor Module		1 × hole for M10	1 × hole for M12	1 × hole for M12	2 × hole for M12
• To load		1 × hole for M10	1 × hole for M12	1 × hole for M12	2 × hole for M12
• PE		M6 screw	M6 screw	M6 screw	M6 screw
Dimensions					
• Width	mm (in)	410 (16.1)	460 (18.1)	460 (18.1)	445 (17.5)
• Height	mm (in)	370 (14.6)	370 (14.6)	385 (15.2)	385 (15.2)
• Depth	mm (in)	229 (9.02)	275 (10.8)	312 (12.3)	312 (12.3)
Weight, approx.	kg (lb)	66 (146)	122 (269)	149 (329)	158 (348)
Voltage Peak Limiter (VPL)					
Power loss, max.					
• At 50 Hz 400 V	kW	0.029	0.042	0.077	0.134
• At 60 Hz 460 V	kW	0.027	0.039	0.072	0.125
• At 150 Hz 400 V	kW	0.025	0.036	0.066	0.114
Connections					
• To dv/dt reactor		M8 nut	70 mm^2 terminals	1 × hole for M8	1 × hole for M10
• To DC link		M8 nut	70 mm^2 terminals	1 × hole for M8	1 × hole for M10
• PE		M8 stud	35 mm^2 terminals	M8 stud	M8 stud
Dimensions					
• Width	mm (in)	265 (10.4)	392 (15.4)	309 (12.2)	309 (12.2)
• Height	mm (in)	263 (10.3)	285 (11.2)	1313 (51.7)	1313 (51.7)
• Depth	mm (in)	190 (7.48)	210 (8.27)	400 (15.7)	400 (15.7)
Weight, approx.	kg (lb)	6 (13)	16 (35)	48 (106)	72 (159)
Suitable for Power Module (Type rating)		6SL3310-1TE32-1AA3 (110 kW) 6SL3315-1TE32-1AA3 (110 kW) 6SL3310-1TE32-6AA3 (132 kW) 6SL3315-1TE32-6AA3 (132 kW)	6SL3310-1TE33-1AA3 (160 kW) 6SL3315-1TE33-1AA3 (160 kW) 6SL3310-1TE33-8AA3 (200 kW) 6SL3310-1TE35-0AA3 (250 kW) 6SL3315-1TE35-0AA3 (250 kW)	–	–
Suitable for Motor Module (Type rating)		6SL3320-1TE32-1AA3 (110 kW) 6SL3325-1TE32-1AA3 (110 kW) 6SL3320-1TE32-6AA3 (132 kW) 6SL3325-1TE32-6AA3 (132 kW)	6SL3320-1TE33-1AA3 (160 kW) 6SL3325-1TE33-1AA3 (160 kW) 6SL3320-1TE33-8AA3 (200 kW) 6SL3320-1TE35-0AA3 (250 kW) 6SL3325-1TE35-0AA3 (250 kW)	6SL3320-1TE36-1AA3 (315 kW) 6SL3325-1TE36-1AA0 (315 kW) 6SL3320-1TE37-5AA0 (400 kW) 6SL3325-1TE37-5AA0 (400 kW) 6SL3320-1TE38-4AA0 (450 kW) 6SL3325-1TE38-4AA0 (450 kW)	6SL3320-1TE41-0AA3 (560 kW) 6SL3325-1TE41-0AA3 (560 kW) 6SL3320-1TE41-2AA3 (710 kW) 6SL3325-1TE41-2AA3 (710 kW) 6SL3320-1TE41-4AA3 (800 kW) 6SL3325-1TE41-4AA3 (800 kW) 6SL3325-1TE41-4AS3 (800 kW) [2]

Note:

For powers above 560 kW (380 ... 480 V) or 710 kW (500 ... 690 V), then a filter contains two dv/dt reactors.

The technical specifications listed refer to a dv/dt reactor.
For additional information on dv/dt filters, please refer to the SINAMICS Low Voltage Engineering Manual.

[1] Longer cable lengths for specific configurations are available on request.

[2] This Motor Module has been specifically designed for loads demanding a high dynamic performance.

© Siemens AG 2017

Technical specifications (continued)

Line voltage 500 ... 690 V 3 AC		dv/dt filter plus VPL			
		6SL3000-2DH31-0AA0	6SL3000-2DH31-5AA0	6SL3000-2DH32-2AA0	6SL3000-2DH33-3AA0
$I_{th\ max}$	A	100	150	215	330
Degree of protection		IP00	IP00	IP00	IP00
Cable length, max. between dv/dt filter and motor [1]					
• Shielded	m (ft)	300 (984)	300 (984)	300 (984)	300 (984)
• Unshielded	m (ft)	450 (1476)	450 (1476)	450 (1476)	450 (1476)
Conformity		CE	CE	CE	CE
Certificate of suitability [2]		cURus	cURus	cURus	cURus
dv/dt reactor					
Power loss, max.					
• At 50 Hz 500/690 V	kW	0.49	0.389	0.578	0.595
• At 60 Hz 575 V	kW	0.508	0.408	0.604	0.62
• At 150 Hz 500/690 V	kW	0.541	0.436	0.645	0.661
Connections					
• To the Power Module/ Motor Module		1 × hole for M10	1 × hole for M10	1 × hole for M10	1 × hole for M10
• To load		1 × hole for M10	1 × hole for M10	1 × hole for M10	1 × hole for M10
• PE		M6 screw	M6 screw	M6 screw	M6 screw
Dimensions					
• Width	mm (in)	350 (13.8)	350 (13.8)	460 (18.1)	460 (18.1)
• Height	mm (in)	320 (12.6)	320 (12.6)	360 (14.2)	360 (14.2)
• Depth	mm (in)	227 (8.94)	227 (8.94)	275 (10.8)	275 (10.8)
Weight, approx.	kg (lb)	48 (106)	50 (110)	83 (183)	135 (298)
Voltage Peak Limiter (VPL)					
Power loss, max.					
• At 50 Hz 500/690 V	kW	0.016	0.02	0.032	0.042
• At 60 Hz 575 V	kW	0.015	0.019	0.03	0.039
• At 150 Hz 500/690 V	kW	0.013	0.018	0.027	0.036
Connections					
• To dv/dt reactor		M8 nut	M8 nut	70 mm^2 terminals	70 mm^2 terminals
• To DC link		M8 nut	M8 nut	70 mm^2 terminals	70 mm^2 terminals
• PE		M8 stud	M8 stud	35 mm^2 terminals	35 mm^2 terminals
Dimensions					
• Width	mm (in)	263 (10.3)	263 (10.3)	392 (15.4)	392 (15.4)
• Height	mm (in)	265 (10.4)	265 (10.4)	285 (11.2)	285 (11.2)
• Depth	mm (in)	188 (7.40)	188 (7.40)	210 (8.27)	210 (8.27)
Weight, approx.	kg (lb)	6 (13)	6 (13)	16 (35)	16 (35)
Suitable for Motor Module (Type rating)		6SL3320-1TG28-5AA3 (75 kW) 6SL3320-1TG31-0AA3 (90 kW) 6SL3325-1TG31-0AA3 (90 kW)	6SL3320-1TG31-2AA3 (110 kW) 6SL3320-1TG31-5AA3 (132 kW) 6SL3325-1TG31-5AA3 (132 kW)	6SL3320-1TG31-8AA3 (160 kW) 6SL3320-1TG32-2AA3 (200 kW) 6SL3325-1TG32-2AA3 (200 kW)	6SL3320-1TG32-6AA3 (250 kW) 6SL3320-1TG33-3AA3 (315 kW) 6SL3325-1TG33-3AA3 (315 kW)

Note:

For powers above 560 kW (380 ... 480 V) or 710 kW (500 ... 690 V), then a filter contains two dv/dt reactors.

The technical specifications listed refer to a dv/dt reactor.
For additional information on dv/dt filters, please refer to the SINAMICS Low Voltage Engineering Manual.

[1] Longer cable lengths for specific configurations are available on request.

[2] Only for line voltages 500 ... 600 V 3 AC.

© Siemens AG 2017

Technical specifications (continued)

Line voltage 500 ... 690 V 3 AC		dv/dt filter plus VPL			
		6SL3000-2DH34-1AA0	6SL3000-2DH35-8AA0	6SL3000-2DH38-1AA0	6SL3000-2DH41-4AA0
$I_{th\ max}$	A	410	575	810	1270
Degree of protection		IP00	IP00	IP00	IP00
Cable length, max. between dv/dt filter and motor [1]					
• Shielded	m (ft)	300 (984)	300 (984)	300 (984)	300 (984)
• Unshielded	m (ft)	450 (1476)	450 (1476)	450 (1476)	450 (1476)
Conformity		CE	CE	CE	CE
Certificate of suitability [2]		cURus	cURus	cURus	cURus
dv/dt reactor					
Power loss, max.					
• At 50 Hz 500/690 V	kW	0.786	0.862	0.828	0.865
• At 60 Hz 575 V	kW	0.826	0.902	0.867	0.904
• At 150 Hz 500/690 V	kW	0.884	0.964	0.927	0.966
Connections					
• To the Power Module/ Motor Module		1 × hole for M12	1 × hole for M12	2 × hole for M12	2 × hole for M12
• To load		1 × hole for M12	1 × hole for M12	2 × hole for M12	2 × hole for M12
• PE		M6 screw	M6 screw	M6 screw	M6 screw
Dimensions					
• Width	mm (in)	460 (18.1)	460 (18.1)	445 (17.5)	445 (17.5)
• Height	mm (in)	385 (15.2)	385 (15.2)	385 (15.2)	385 (15.2)
• Depth	mm (in)	312 (12.3)	312 (12.3)	312 (12.3)	312 (12.3)
Weight, approx.	kg (lb)	147 (324)	172 (379)	160 (353)	164 (362)
Voltage Peak Limiter (VPL)					
Power loss, max.					
• At 50 Hz 500/690 V	kW	0.051	0.063	0.106	0.15
• At 60 Hz 575 V	kW	0.048	0.059	0.1	0.14
• At 150 Hz 500/690 V	kW	0.043	0.054	0.091	0.128
Connections					
• To dv/dt reactor		1 × hole for M8	1 × hole for M8	1 × hole for M10	1 × hole for M10
• To DC link		1 × hole for M8	1 × hole for M8	1 × hole for M10	1 × hole for M10
• PE		M8 stud	M8 stud	M8 stud	M8 stud
Dimensions					
• Width	mm (in)	309 (12.2)	309 (12.2)	309 (12.2)	309 (12.2)
• Height	mm (in)	1313 (51.7)	1313 (51.7)	1313 (51.7)	1313 (51.7)
• Depth	mm (in)	400 (15.7)	400 (15.7)	400 (15.7)	400 (15.7)
Weight, approx.	kg (lb)	48 (106)	48 (106)	72 (159)	73 (161)
Suitable for Motor Module (Type rating)		6SL3320-1TG34-1AA3 (400 kW)	6SL3320-1TG34-7AA3 (450 kW) 6SL3325-1TG34-7AA3 (450 kW) 6SL3320-1TG35-8AA3 (560 kW) 6SL3325-1TG35-8AA3 (560 kW)	6SL3320-1TG37-4AA3 (710 kW) 6SL3325-1TG37-4AA3 (710 kW) 6SL3320-1TG38-1AA3 (800 kW) 6SL3325-1TG38-0AA3 (800 kW) 6SL3325-1TG38-1AA3 (800 kW)	6SL3320-1TG38-8AA3 (900 kW) 6SL3320-1TG41-0AA3 (1000 kW) 6SL3325-1TG41-0AA3 (1000 kW) 6SL3320-1TG41-3AA3 (1200 kW) 6SL3325-1TG41-3AA3 (1200 kW)

Note:

For powers above 560 kW (380 ... 480 V) or 710 kW (500 ... 690 V), then a filter contains two dv/dt reactors.

The technical specifications listed refer to a dv/dt reactor.
For additional information on dv/dt filters, please refer to the SINAMICS Low Voltage Engineering Manual.

[1] Longer cable lengths for specific configurations are available on request.

[2] Only for line voltages 500 ... 600 V 3 AC.

© Siemens AG 2017

Overview

dv/dt filters compact plus VPL (**V**oltage **P**eak **L**imiter) limit the voltage rate-of-rise *dv/dt* to values of < 1600 V/µs and the typical voltage peaks to the following values in accordance with the limit value curve A according to IEC 60034-25: 2007:

< 1150 V at U_{line} < 575 V

< 1400 V at 660 V < U_{line} < 690 V

Standard motors with standard insulation and without insulated bearings with a supply voltage of up to 690 V can be used for converter operation if a dv/dt filter compact plus VPL is used.

dv/dt filters compact plus VPL are designed for the following maximum motor cable lengths:

- Shielded cables: 100 m (328 ft) (e.g. Protodur NYCWY)
- Unshielded cables: 150 m (492 ft) (e.g. Protodur NYY)

For longer cable lengths (> 100 m (328 ft) shielded, > 150 m (492 ft) unshielded) refer to dv/dt filter plus VPL.

Notice:

- The max. permissible cable length between the dv/dt filter and Motor Module is 5 m (16.4 ft)
- Operation with output frequencies < 10 Hz is permissible for max. 5 min.

Design

The dv/dt filter compact plus VPL consists of two components, which are supplied together as a compact mechanical unit:

- dv/dt reactor
- Voltage limiting network, which cuts off the voltage peaks and feeds the energy back to the DC link

© Siemens AG 2017

Selection and ordering data

Suitable for Power Module		Type rating at 400 V, 50 Hz (460 V, 60 Hz)/ 690 V, 50 Hz (575 V, 60 Hz)	**dv/dt filter compact plus VPL**
Air-cooled	Liquid-cooled	kW (hp)	Article No.
Line voltage 380 ... 480 V 3 AC			
6SL3320-1TE32-1AA3 6SL3320-1TE32-6AA3	6SL3325-1TE32-1AA3 6SL3325-1TE32-6AA3	110 (150) 132 (200)	**6SL3000-2DE32-6EA0**
6SL3320-1TE33-1AA3 6SL3320-1TE33-8AA3 6SL3320-1TE35-0AA3	6SL3325-1TE33-1AA3 6SL3325-1TE35-0AA3	160 (250) 200 (300) 250 (400)	**6SL3000-2DE35-0EA0**
6SL3320-1TE36-1AA3 6SL3320-1TE37-5AA3 6SL3320-1TE38-4AA3	6SL3325-1TE36-1AA3 6SL3325-1TE37-5AA3 6SL3325-1TE38-4AA3	315 (500) 400 (600) 450 (700)	**6SL3000-2DE38-4EA0**
6SL3320-1TE41-0AA3 6SL3320-1TE41-2AA3 6SL3320-1TE41-4AA3	6SL3325-1TE41-0AA3 6SL3325-1TE41-2AA3 6SL3325-1TE41-4AA3 6SL3325-1TE41-4AS3 [1]	560 (800) 710 (1000) 800 (1150) 800 (1000)	**6SL3000-2DE41-4EA0**
Line voltage 500 ... 690 V 3 AC			
6SL3320-1TG28-5AA3 6SL3320-1TG31-0AA3	 6SL3325-1TG31-0AA3	75 (75) 90 (75)	**6SL3000-2DG31-0EA0**
6SL3320-1TG31-2AA3 6SL3320-1TG31-5AA3	 6SL3325-1TG31-5AA3	110 (100) 132 (150)	**6SL3000-2DG31-5EA0**
6SL3320-1TG31-8AA3 6SL3320-1TG32-2AA3	 6SL3325-1TG32-2AA3	160 (150) 200 (200)	**6SL3000-2DG32-2EA0**
6SL3320-1TG32-6AA3 6SL3320-1TG33-3AA3	 6SL3325-1TG33-3AA3	250 (250) 315 (300)	**6SL3000-2DG33-3EA0**
6SL3320-1TG34-1AA3		400 (400)	**6SL3000-2DG34-1EA0**
6SL3320-1TG34-7AA3 6SL3320-1TG35-8AA3	6SL3325-1TG34-7AA3 6SL3325-1TG35-8AA3	450 (450) 560 (600)	**6SL3000-2DG35-8EA0**
6SL3320-1TG37-4AA3 6SL3320-1TG38-1AA3	6SL3325-1TG37-4AA3 6SL3325-1TG38-0AA3 6SL3325-1TG38-1AA3	710 (700) 800 (800) 800 (800)	**6SL3000-2DG38-1EA0**
6SL3320-1TG38-8AA3 6SL3320-1TG41-0AA3 6SL3320-1TG41-3AA3	 6SL3325-1TG41-0AA3 6SL3325-1TG41-3AA3	900 (900) 1000 (1000) 1200 (1250)	**6SL3000-2DG41-3EA0**

For additional information on dv/dt filters, please refer to the SINAMICS Low Voltage Engineering Manual.

[1] This Motor Module has been specifically designed for loads demanding a high dynamic performance.

© Siemens AG 2017

Technical specifications

Line voltage 380 ... 480 V 3 AC		**dv/dt filter compact plus VPL**			
		6SL3000-2DE32-6EA0	6SL3000-2DE35-0EA0	6SL3000-2DE38-4EA0	6SL3000-2DE41-4EA0
Rated current	A	260	490	840	1405
$I_{th\ max}$	A	260	490	840	1405
Power loss, max.					
• At 50 Hz 400 V	kW	0.21	0.29	0.518	Reactor: 1.027 VPL: 0.127 Total: 1.154
• At 60 Hz 460 V	kW	0.215	0.296	0.529	Reactor: 1.077 VPL: 0.12 Total: 1.197
• At 150 Hz 400 V	kW	0.255	0.344	0.609	Reactor: 1.354 VPL: 0.09 Total: 1.444
Power connection input and output side		Hole for M10	Hole for M10	Hole for M12	2 × elongated hole, 14 × 18 mm
• Conductor cross section, max. (IEC)		Provided for busbar connection	Provided for busbar connection	Provided for busbar connection	Provided for busbar connection
DC link connection DCPS, DCNS		Threaded socket M8	Threaded socket M8	Hole for M8	Hole for M8
• Conductor cross section, max. (IEC)	mm^2	16	25	50	95
PE/GND connection		Threaded socket M6	Threaded socket M6	Threaded socket M6	Threaded socket M6 (reactor and VPL)
Motor cable length, max.					
• Shielded	m (ft)	100 (328)	100 (328)	100 (328)	100 (328)
• Unshielded	m (ft)	150 (492)	150 (492)	150 (492)	150 (492)
Degree of protection		IP00	IP00	IP00	IP00
Dimensions					
• Width	mm (in)	310 (12.2)	350 (13.8)	440 (17.3)	Reactor: 430 VPL: 277
• Height	mm (in)	283 (11.1)	317 (12.5)	369 (14.5)	Reactor: 385 VPL: 360
• Depth	mm (in)	238 (9.37)	260 (10.2)	311 (12.2)	Reactor: 323 VPL: 291
Weight, approx.	kg (lb)	41 (90)	61 (135)	103 (227)	Reactor: 168.8 VPL: 19.2 Total: 188
Conformity		CE	CE	CE	CE
Certificate of suitability		cURus	cURus	cURus	cURus
Suitable for Power Module (Type rating)		6SL3310-1TE32-1AA3 (110 kW) 6SL3315-1TE32-1AA3 (110 kW) 6SL3310-1TE32-6AA3 (132 kW) 6SL3315-1TE32-6AA3 (132 kW)	6SL3310-1TE33-1AA3 (160 kW) 6SL3315-1TE33-1AA3 (160 kW) 6SL3310-1TE33-8AA3 (200 kW) 6SL3310-1TE35-0AA3 (200 kW) 6SL3315-1TE35-0AA3 (250 kW)	6SL3320-1TE36-1AA3 (315 kW) 6SL3325-1TE36-1AA3 (315 kW) 6SL3320-1TE37-5AA3 (400 kW) 6SL3325-1TE37-5AA3 (400 kW) 6SL3320-1TE38-4AA3 (450 kW) 6SL3325-1TE38-4AA3 (450 kW)	6SL3320-1TE41-0AA3 (560 kW) 6SL3325-1TE41-0AA3 (560 kW) 6SL3320-1TE41-2AA3 (710 kW) 6SL3325-1TE41-2AA3 (710 kW) 6SL3320-1TE41-4AA3 (800 kW) 6SL3325-1TE41-4AA3 (800 kW) 6SL3325-1TE41-4AS3 (800 kW) [1]

[1] This Motor Module has been specifically designed for loads demanding a high dynamic performance.

© Siemens AG 2017

Technical specifications (continued)

Line voltage 500 ... 690 V 3 AC		dv/dt filter compact plus VPL			
		6SL3000-2DG31-0EA0	6SL3000-2DG31-5EA0	6SL3000-2DG32-2EA0	6SL3000-2DG33-3EA0
Rated current	A	100	150	215	330
$I_{th\ max}$	A	100	150	215	330
Power loss, max.					
• At 50 Hz 500/690 V	kW	0.227	0.27	0.305	0.385
• At 60 Hz 575 V	kW	0.236	0.279	0.316	0.399
• At 150 Hz 500/690 V	kW	0.287	0.335	0.372	0.48
Power connection input and output side		Hole for M10	Hole for M10	Hole for M10	Hole for M10
• Conductor cross section, max. (IEC)		Provided for busbar connection	Provided for busbar connection	Provided for busbar connection	Provided for busbar connection
DC link connection DCPS, DCNS		Threaded socket M8	Threaded socket M8	Hole for M8	Hole for M8
• Conductor cross section, max. (IEC)	mm^2	16	16	25	25
PE/GND connection		Threaded socket M6	Threaded socket M6	Threaded socket M6	Threaded socket M6
Motor cable length, max.					
• Shielded	m (ft)	100 (328)	100 (328)	100 (328)	100 (328)
• Unshielded	m (ft)	150 (492)	150 (492)	150 (492)	150 (492)
Degree of protection		IP00	IP00	IP00	IP00
Dimensions					
• Width	mm (in)	310 (12.2)	310 (12.2)	350 (13.8)	350 (13.8)
• Height	mm (in)	283 (11.1)	283 (11.1)	317 (12.5)	317 (12.5)
• Depth	mm (in)	238 (9.37)	238 (9.37)	260 (10.2)	260 (10.2)
Weight, approx.	kg (lb)	34 (75)	36 (79)	51 (112)	60 (132)
Conformity		CE	CE	CE	CE
Certificate of suitability [1]		cURus	cURus	cURus	cURus
Suitable for Motor Module (Type rating)		6SL3320-1TG28-5AA3 (75 kW) 6SL3320-1TG31-0AA3 (90 kW) 6SL3325-1TG31-0AA3 (90 kW)	6SL3320-1TG31-2AA3 (110 kW) 6SL3320-1TG31-5AA3 (132 kW) 6SL3325-1TG31-5AA3 (132 kW)	6SL3320-1TG31-8AA3 (160 kW) 6SL3320-1TG32-2AA3 (200 kW) 6SL3325-1TG32-2AA3 (200 kW)	6SL3320-1TG32-6AA3 (250 kW) 6SL3320-1TG33-3AA3 (315 kW) 6SL3325-1TG33-3AA3 (315 kW)

[1] Only for line voltages 500 ... 600 V 3 AC.

© Siemens AG 2017

Technical specifications (continued)

Line voltage 500 ... 690 V 3 AC		**dv/dt filter compact plus VPL**			
		6SL3000-2DG34-1EA0	6SL3000-2DG35-8EA0	6SL3000-2DG38-1EA0	6SL3000-2DG41-3EA0
Rated current	A	410	575	810	1270
$I_{th\ max}$	A	410	575	810	1270
Power loss, max.					
• At 50 Hz 500/690 V	kW	0.55	0.571	Reactor: 0.88 VPL: 0.084 Total: 0.964	Reactor: 0.926 VPL: 0.124 Total: 1.05
• At 60 Hz 575 V	kW	0.568	0.586	Reactor: 0.918 VPL: 0.08 Total: 0.998	Reactor: 0.993 VPL: 0.111 Total: 1.104
• At 150 Hz 500/690 V	kW	0.678	0.689	Reactor: 1.137 VPL: 0.059 Total: 1.196	Reactor: 1.23 VPL: 0.089 Total: 1.319
Power connection input and output side		Hole for M12	Hole for M12	2 × elongated hole, 14 × 18 mm	2 × elongated hole, 14 × 18 mm
• Conductor cross section, max. (IEC)		Provided for busbar connection	Provided for busbar connection	Provided for busbar connection	Provided for busbar connection
DC link connection DCPS, DCNS		Hole for M8	Hole for M8	Hole for M8	Hole for M8
• Conductor cross section, max. (IEC)	mm^2	50	50	95	95
PE/GND connection		Threaded socket M6	Threaded socket M6	Threaded socket M6 (reactor and VPL)	Threaded socket M6 (reactor and VPL)
Motor cable length, max.					
• Shielded	m (ft)	100 (328)	100 (328)	100 (328)	100 (328)
• Unshielded	m (ft)	150 (492)	150 (492)	150 (492)	150 (492)
Degree of protection		IP00	IP00	IP00	IP00
Dimensions					
• Width	mm (in)	440 (17.3)	440 (17.3)	Reactor: 430 VPL: 277	Reactor: 430 VPL: 277
• Height	mm (in)	369 (14.5)	369 (14.5)	Reactor: 385 VPL: 360	Reactor: 385 VPL: 360
• Depth	mm (in)	311 (12.2)	311 (12.2)	Reactor: 323 VPL: 291	Reactor: 323 VPL: 291
Weight, approx.	kg (lb)	87 (192)	100 (220)	Reactor: 171.2 VPL: 18.8 Total: 190	Reactor: 175.8 VPL: 19.2 Total: 195
Conformity		CE	CE	CE	CE
Certificate of suitability [1]		cURus	cURus	cURus	cURus
Suitable for Motor Module (Type rating)		6SL3320-1TG34-1AA3 (400 kW)	6SL3320-1TG34-7AA3 (450 kW) 6SL3325-1TG34-7AA3 (450 kW) 6SL3320-1TG35-8AA3 (560 kW) 6SL3325-1TG35-8AA3 (560 kW)	6SL3320-1TG37-4AA3 (710 kW) 6SL3325-1TG37-4AA3 (710 kW) 6SL3320-1TG38-1AA3 (800 kW) 6SL3325-1TG38-0AA3 (800 kW) 6SL3325-1TG38-1AA3 (800 kW)	6SL3320-1TG38-8AA3 (900 kW) 6SL3320-1TG41-0AA3 (1000 kW) 6SL3325-1TG41-0AA3 (1000 kW) 6SL3320-1TG41-3AA3 (1200 kW) 6SL3325-1TG41-3AA3 (1200 kW)

[1] Only for line voltages 500 ... 600 V 3 AC.

© Siemens AG 2017

Overview

If a sine-wave filter is connected to the output of the Power Module or Motor Module, the voltage between the motor terminals is virtually sinusoidal. This reduces the voltage load on the motor windings and prevents motor noise induced by the pulse frequency.

The pulse frequency of the modules must be set to 4 kHz for the sine-wave filters. The max. output frequency with sine-wave filter is limited to 150 Hz.

As a result, the max. possible output current and the max. achievable output voltage of the units are reduced. The voltage drops across the sine-wave filter, a factor which must also be taken into account in the drive design.

A sine-wave filter must be installed as close as possible to the Motor Module or Power Module.

It is only permissible to operate the sine-wave filter when the motor is connected (sine-wave filters are not no-load proof)!

For additional information on sine-wave filters, please refer to the SINAMICS Low Voltage Configuration Manual.

Selection and ordering data

Suitable for Power Module		Suitable for Motor Module		Type rating at 400 V, 50 Hz (460 V, 60 Hz)	Rated output current	**Sine-wave filter**
Air-cooled	Liquid-cooled	Air-cooled	Liquid-cooled	kW (hp)	A	Article No.
Line voltage 380 ... 480 V 3 AC						
6SL3310-1TE32-1AA3	6SL3315-1TE32-1AA3	6SL3320-1TE32-1AA3	6SL3325-1TE32-1AA3	110 (150)	210	**6SL3000-2CE32-3AA0**
6SL3310-1TE32-6AA3	6SL3315-1TE32-6AA3	6SL3320-1TE32-6AA3	6SL3325-1TE32-6AA3	132 (200)	260	
6SL3310-1TE33-1AA3	6SL3315-1TE33-1AA3	6SL3320-1TE33-1AA3	6SL3325-1TE33-1AA3	160 (250)	310	**6SL3000-2CE32-8AA0**
6SL3310-1TE33-8AA3	–	6SL3320-1TE33-8AA3	–	200 (300)	380	**6SL3000-2CE33-3AA0**
6SL3310-1TE35-0AA3	6SL3315-1TE35-0AA3	6SL3320-1TE35-0AA3	6SL3325-1TE35-0AA3	250 (400)	490	**6SL3000-2CE34-1AA0**

© Siemens AG 2017

Technical specifications

Line voltage 380 ... 480 V 3 AC		**Sine-wave filter**				
		6SL3000-2CE32-3AA0		6SL3000-2CE32-8AA0	6SL3000-2CE33-3AA0	6SL3000-2CE34-1AA0
Rated current	A	225		276	333	408
Power loss, max.						
• At 50 Hz 400 V	kW	0.221		0.235	0.245	0.34
• At 60 Hz 460 V	kW	0.265		0.282	0.294	0.408
• At 150 Hz 400 V	kW	0.48		0.5	0.53	0.75
Load connection		Flat connector for M10 screw		Flat connector for M10 screw	Flat connector for M10 screw	Flat connector for M10 screw
PE connection		1 × hole for M10		1 × hole for M10	1 × hole for M10	1 × hole for M10
Cable length, max. between sine-wave filter and motor						
• Shielded	m (ft)	300 (984)		300 (984)	300 (984)	300 (984)
• Unshielded	m (ft)	450 (1476)		450 (1476)	450 (1476)	450 (1476)
Degree of protection		IP00		IP00	IP00	IP00
Dimensions						
• Width	mm (in)	620 (24.4)		620 (24.4)	620 (24.4)	620 (24.4)
• Height	mm (in)	300 (11.8)		300 (11.8)	370 (14.6)	370 (14.6)
• Depth	mm (in)	320 (12.6)		320 (12.6)	360 (14.2)	360 (14.2)
Weight, approx.	kg (lb)	124 (273)		127 (280)	136 (300)	198 (437)
Conformity		CE		CE	CE	CE
Certificate of suitability		cURus		cURus	cURus	cURus
Suitable for Power Module		6SL3310-1TE32-1AA3 6SL3315-1TE32-1AA3	6SL3310-1TE32-6AA3 6SL3315-1TE32-6AA3	6SL3310-1TE33-1AA3 6SL3315-1TE33-1AA3	6SL3310-1TE33-8AA3	6SL3310-1TE35-0AA3 6SL3315-1TE35-0AA3
Suitable for Motor Module		6SL3320-1TE32-1AA3 6SL3325-1TE32-1AA3	6SL3320-1TE32-6AA3 6SL3325-1TE32-6AA3	6SL3320-1TE33-1AA3 6SL3325-1TE33-1AA3	6SL3320-1TE33-8AA3	6SL3320-1TE35-0AA3 6SL3325-1TE35-0AA3
• Rated current of the Motor Module or Power Module at a pulse frequency of 4 kHz	A	170	215	270	330	380
• Output power of the Motor Module or Power Module at a pulse frequency of 4 kHz	kW	90	110	132	160	200

© Siemens AG 2017

Overview

For SINAMICS S120, S150, G130 and G150 units, a Safe Brake Adapter SBA is required to safely control a motor holding brake via the Safe Brake Control (SBC) safety function according to IEC 61800-5-2.

The Safe Brake Adapter is available for a 230 V AC brake control voltage.

It can be ordered as supplementary component for SINAMICS S120 chassis format units as well as for SINAMICS G130 units.

Note:

The SBA is approved for the IEC area. Safe Brake Adapter with UL approval are available on request. The UL approval is valid for a maximum permissible current consumption of 1.5 A (inductive).

Design

The Safe Brake Adapter SBA has the following connections and interfaces:

- 1 connection for the connecting cable to the Power Module/Motor Module
- 1 connection for the external 230 V AC supply
- 1 connection for motor holding brake
- 1 connection for fast de-excitation

Selection and ordering data

Description	Article No.
Safe Brake Adapter	
• 230 V AC/2 A	**6SL3355-2DX00-1AA0**
Accessories	
Pre-assembled interface cable to connect the SBA to the electronics module (4 m/13.1 ft)	**6SL3060-4DX04-0AA0**

Technical specifications

	Safe Brake Adapter 6SL3355-2DX00-1AA0
Electronics power supply	
Supply voltage (via the Control Interface Module)	24 V DC (20.4 … 28.8 V DC)
Supply voltage of the motor holding brake	230 V AC
Max. permissible current consumption [1]	
• Motor holding brake	2 A
• Fast de-energization	2 A
Max. permissible cable lengths	
• to the Control Interface Module	10 m (32.8 ft)
• to the brake	300 m (984 ft)
Max. conductor cross section	2.5 mm^2
Dimensions	
• Width	75 mm (2.95 in)
• Height	111 mm (4.37 in)
• Depth	89 mm (3.50 in)
Weight, approx.	0.25 kg (0.55 lb)
Safety Integrated	Safety Integrity Level 2 (SIL2) acc. to IEC 61508, Performance Level d (PLd) acc. to ISO 13849-1 and Control Category 3 acc. to EN ISO 13849-1

[1] The UL approval is valid for a maximum permissible current consumption of 1.5 A (inductive).

© Siemens AG 2017

Integration

The control and feedback signal regarding the switching state of the SBA relay is realized via terminals of the Control Interface Module (CIM). The excitation coil of the holding brake is connected directly at the SBA.

For the SINAMICS S120 units, chassis format, the brake supply voltage must be connected externally at the SBA.

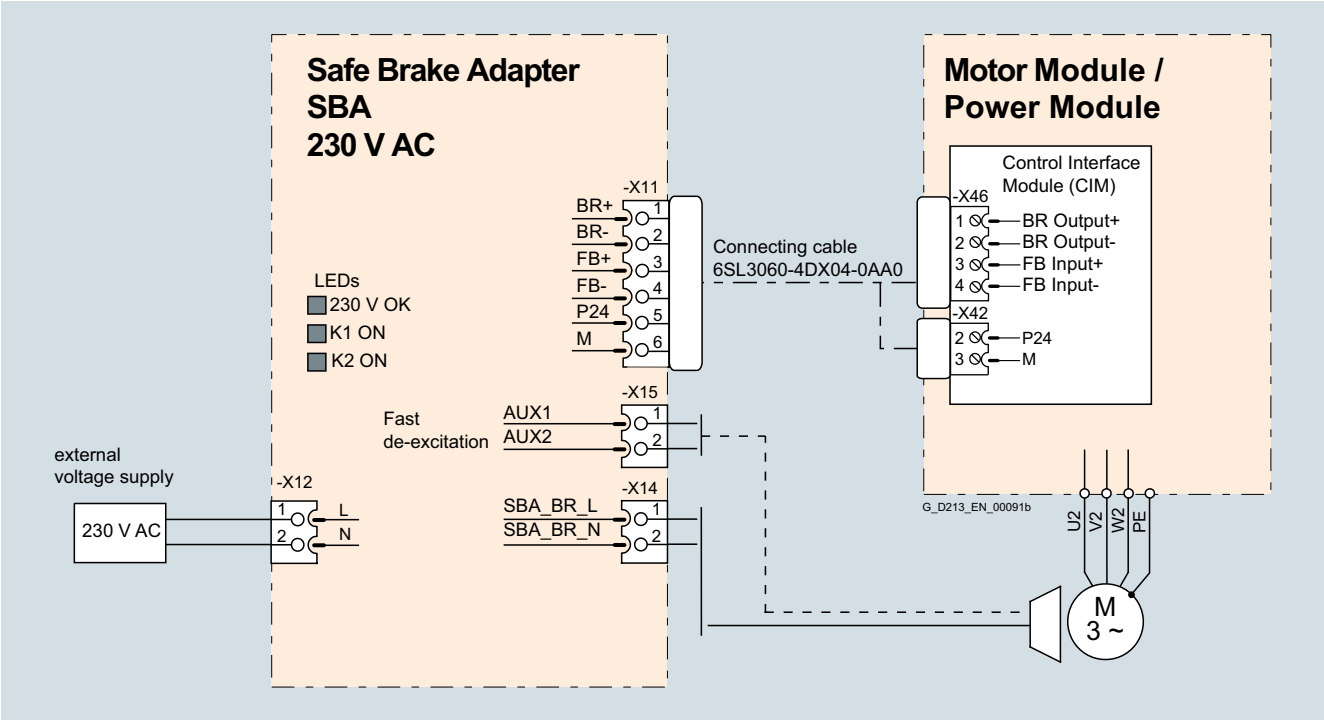

Connection example of a Safe Brake Adapter

© Siemens AG 2017

Design

PM240-2 Power Modules, frame sizes FSA to FSF (with Control Unit and Operator Panel)

The PM240-2 Power Modules in blocksize format feature the following connections and interfaces as standard:

- Line supply connection
- PM-IF interface for connection of the PM240-2 Power Module and CU310-2/SIMOTION D410-2 Control Unit or CUA31/CUA32 Control Unit Adapter. The PM240-2 Power Module also supplies power to the CU310-2/SIMOTION D410-2 Control Unit or CUA31/CUA32 Control Unit Adapter by means of an integrated power supply
- Terminals DCP/R1 and R2 for connection of an external braking resistor
- Motor connection using screw terminals or screw studs
- Control circuit for the Safe Brake Relay for controlling a holding brake
- 2 PE/protective conductor connections

Power Modules without integrated line filter can be connected to grounded TN/TT systems and non-grounded IT systems. Power Modules with integrated line filter are suitable only for connection to TN systems with grounded neutral.

Push-through variant

The push-through variant allows the cooling fins of the Power Module to be pushed through the rear panel of the control cabinet. Push-through versions should be used in applications where the amount of power loss generated inside the control cabinet itself must be minimized.

The scope of delivery of Power Modules includes shield connection kits used for EMC-compliant installation of Power Modules.

Additional options

Further selected accessories are available from "Siemens Product Partner for Drives Options":

www.siemens.com/drives-options-partner

Integration

PM240-2 Power Modules in blocksize format communicate via the PM-IF interface with

- the CU310-2 Control Unit
- the SIMOTION D410-2 Control Unit
- CUA31 or CUA32 Control Unit Adapter

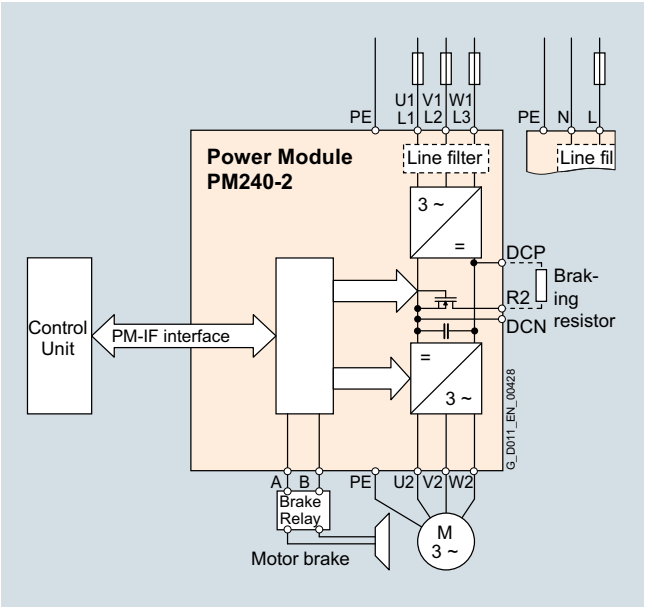

Connection diagram for PM240-2 Power Modules, frame sizes FSA to FSC, with or without integrated line filter

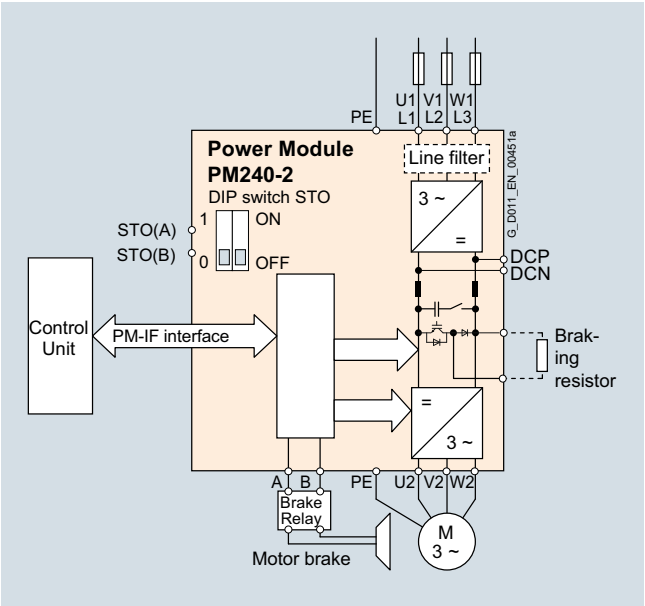

Connection diagram for PM240-2 Power Modules, frame sizes FSD to FSF, with or without integrated line filter

With a CUA31/CUA32 Control Unit Adapter snapped on, the PM240-2 Power Module communicates via a DRIVE-CLiQ connection with

- a CU320-2 Control Unit
- an NCU 7.x of SINUMERIK
- SIMOTION D4x5-2 Control Unit

© Siemens AG 2017

Integration (continued)

Power and DC link components that are optionally available depending on the Power Module used

The following line-side power components, DC link components and load-side power components are optionally available in the appropriate frames sizes for the Power Modules:

	Frame size					
	FSA	**FSB**	**FSC**	**FSD**	**FSE**	**FSF**
PM240-2 Power Module with integrated braking chopper						
Available frame sizes						
• 200 V versions	✓	✓	✓	✓ [2]	✓ [2]	✓ [2]
• 400 V versions	✓	✓	✓	✓	✓	✓
• 690 V versions	–	–	–	✓	✓	✓
Line-side power components						
Line filter class A	I	I	I	I [2]	I [2]	I [2]
Line filter class B (only for 400 V versions)	U [1]	U [1]	U [1]	–	–	–
Line reactors (only for 3 AC versions)	S	S	S	I	I	I
DC link components						
Braking resistor	S	S	S	S	S	S
Braking Module	–	–	–	–	–	–
Load-side power components						
Output reactor	S	S	S	S	S	S
Sine-wave filter	–	–	–	–	–	–

U = Base component
S = Lateral mounting
I = Integrated
– = Not possible

General design information

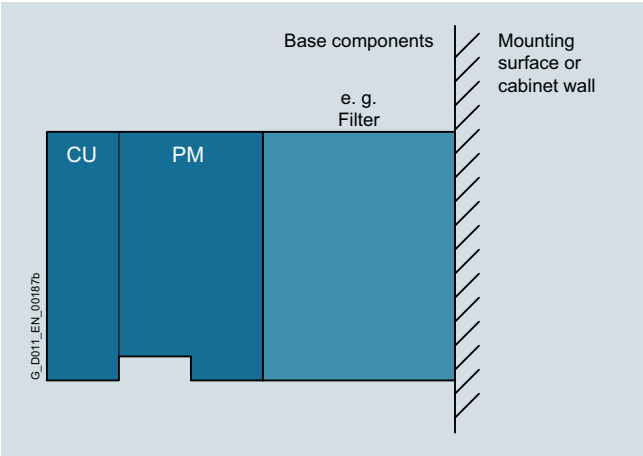

Inverter comprising a Power Module (PM), a Control Unit (CU), and base components (side view)

- If at all possible, the line filter should be mounted directly below the inverter [1].
- With lateral mounting, the line-side components have to be mounted on the left side of the inverter, and the load-side components on the right side.
- Braking resistors have to be mounted directly on the control cabinet wall due to heating issues.

Recommended installation combinations of the inverter and optional power and DC link components

Power Module	Base	Lateral mounting	
Frame size		**Left of the inverter (for line-side power components)**	**Right of the inverter (for load-side power components and DC link components)**
FSA to FSC	Line filters	Line reactor	Output reactor and/or braking resistor
FSD to FSF	–	Line filters	Output reactor and/or braking resistor

[1] Lateral mounting is the only possible option for push-through variants.

[2] PM240-2 200 V versions, frame sizes FSD to FSF are only available without integrated line filter.

© Siemens AG 2017

Selection and ordering data

To ensure that a suitable Power Module is selected, the following currents should be used for applications:

- Rated output current for applications with low overload (LO)
- Base-load current for applications with high overload (HO)

With reference to the rated output current, the modules support at least 2-pole to 6-pole low-voltage motors, e.g. the SIMOTICS 1LE1 motor series. The type rating is merely a guide value. For a description of the overload performance, please refer to the general technical specifications of the Power Modules.

PM240-2 Power Modules standard variant

Type rating [1]		Rated output current I_{rated} [2]	Power based on the base-load current [3]		Base-load current I_H [3]	Frame size	**PM240-2 Power Module standard variant without integrated line filter**	**PM240-2 Power Module standard variant with integrated line filter class A**
kW	hp	A	kW	hp	A	(Frame size)	Article No.	Article No.
200 ... 240 V 1 AC/3 AC								
0.55	0.75	3	**0.37**	0.5	2.3	FSA	**6SL3210-1PB13-0UL0**	**6SL3210-1PB13-0AL0**
0.75	1	3.9	**0.55**	0.75	3	FSA	**6SL3210-1PB13-8UL0**	**6SL3210-1PB13-8AL0**
1.1	1.5	5.5	**0.75**	1	3.9	FSB	**6SL3210-1PB15-5UL0**	**6SL3210-1PB15-5AL0**
1.5	2	7.4	**1.1**	1.5	5.5	FSB	**6SL3210-1PB17-4UL0**	**6SL3210-1PB17-4AL0**
2.2	3	10.4	**1.5**	2	7.4	FSB	**6SL3210-1PB21-0UL0**	**6SL3210-1PB21-0AL0**
3	4	13.6	**2.2**	3	10.4	FSC	**6SL3210-1PB21-4UL0**	**6SL3210-1PB21-4AL0**
4	5	17.5	**3**	4	13.6	FSC	**6SL3210-1PB21-8UL0**	**6SL3210-1PB21-8AL0**
200 ... 240 V 3 AC								
5.5	7.5	22	**4**	5	17.5	FSC	**6SL3210-1PC22-2UL0**	**6SL3210-1PC22-2AL0**
7.5	10	28	**5.5**	7.5	22	FSC	**6SL3210-1PC22-8UL0**	**6SL3210-1PC22-8AL0**
11	15	42	**7.5**	10	35	FSD	**6SL3210-1PC24-2UL0**	–
15	20	54	**11**	15	42	FSD	**6SL3210-1PC25-4UL0**	–
18.5	25	68	**15**	20	54	FSD	**6SL3210-1PC26-8UL0**	–
22	30	80	**18.5**	25	68	FSE	**6SL3210-1PC28-0UL0**	–
30	40	104	**22**	30	80	FSE	**6SL3210-1PC31-1UL0**	–
37	50	130	**30**	40	104	FSF	**6SL3210-1PC31-3UL0**	–
45	60	154	**37**	50	130	FSF	**6SL3210-1PC31-6UL0**	–
55	75	178	**45**	60	154	FSF	**6SL3210-1PC31-8UL0**	–
380 ... 480 V 3 AC [4]								
0.55	0.75	1.7	**0.37**	0.5	1.3	FSA	**6SL3210-1PE11-8UL1**	**6SL3210-1PE11-8AL1**
0.75	1	2.2	**0.55**	0.75	1.7	FSA	**6SL3210-1PE12-3UL1**	**6SL3210-1PE12-3AL1**
1.1	1.5	3.1	**0.75**	1	2.2	FSA	**6SL3210-1PE13-2UL1**	**6SL3210-1PE13-2AL1**
1.5	2	4.1	**1.1**	1.5	3.1	FSA	**6SL3210-1PE14-3UL1**	**6SL3210-1PE14-3AL1**
2.2	3	5.9	**1.5**	2	4.1	FSA	**6SL3210-1PE16-1UL1**	**6SL3210-1PE16-1AL1**
3	4	7.7	**2.2**	3	5.9	FSA	**6SL3210-1PE18-0UL1**	**6SL3210-1PE18-0AL1**
4	5	10.2	**3**	4	7.7	FSB	**6SL3210-1PE21-1UL0**	**6SL3210-1PE21-1AL0**
5.5	7.5	13.2	**4**	5	10.2	FSB	**6SL3210-1PE21-4UL0**	**6SL3210-1PE21-4AL0**
7.5	10	18	**5.5**	7.5	13.2	FSB	**6SL3210-1PE21-8UL0**	**6SL3210-1PE21-8AL0**
11	15	26	**7.5**	10	18	FSC	**6SL3210-1PE22-7UL0**	**6SL3210-1PE22-7AL0**
15	20	32	**11**	15	26	FSC	**6SL3210-1PE23-3UL0**	**6SL3210-1PE23-3AL0**
18.5	25	38	**15**	20	32	FSD	**6SL3210-1PE23-8UL0**	**6SL3210-1PE23-8AL0**
22	30	45	**18.5**	25	38	FSD	**6SL3210-1PE24-5UL0**	**6SL3210-1PE24-5AL0**
30	40	60	**22**	30	45	FSD	**6SL3210-1PE26-0UL0**	**6SL3210-1PE26-0AL0**
37	50	75	**30**	40	60	FSD	**6SL3210-1PE27-5UL0**	**6SL3210-1PE27-5AL0**
45	60	90	**37**	50	75	FSE	**6SL3210-1PE28-8UL0**	**6SL3210-1PE28-8AL0**
55	75	110	**45**	60	90	FSE	**6SL3210-1PE31-1UL0**	**6SL3210-1PE31-1AL0**
75	100	145	**55**	75	110	FSF	**6SL3210-1PE31-5UL0**	**6SL3210-1PE31-5AL0**
90	125	178	**75**	100	145	FSF	**6SL3210-1PE31-8UL0**	**6SL3210-1PE31-8AL0**

[1] Type rating based on the rated output current I_{rated}. The rated output current I_{rated} is based on the duty cycle for low overload (LO).

[2] The rated output current I_{rated} is based on the duty cycle for low overload (LO). These current values are valid for 200 V, 400 V or 690 V and are specified on the rating plate of the Power Module.

[3] The base-load current I_H is based on the duty cycle for high overload (HO).

[4] SIPLUS components for extreme requirements are available. Additional information is available on the Internet at www.siemens.com/siplus-drives

© Siemens AG 2017

Selection and ordering data (continued)

Type rating [1]		Rated output current I_{rated} [2]	Power based on the base-load current [3]		Base-load current I_H [3]	Frame size	PM240-2 Power Module standard variant without integrated line filter	PM240-2 Power Module standard variant with integrated line filter class A
kW	hp	A	kW	hp	A	(Frame size)	Article No.	Article No.
380 ... 480 V 3 AC [4] (continued)								
110	150	205	**90**	125	178	FSF	**6SL3210-1PE32-1UL0**	**6SL3210-1PE32-1AL0**
132	200	250	**110**	150	205	FSF	**6SL3210-1PE32-5UL0**	**6SL3210-1PE32-5AL0**
500 ... 690 V 3 AC								
11	10	14	**7.5**	7,5	11	FSD	**6SL3210-1PH21-4UL0**	**6SL3210-1PH21-4AL0**
15	15	19	**11**	10	14	FSD	**6SL3210-1PH22-0UL0**	**6SL3210-1PH22-0AL0**
18.5	20	23	**15**	15	19	FSD	**6SL3210-1PH22-3UL0**	**6SL3210-1PH22-3AL0**
22	25	27	**18.5**	20	23	FSD	**6SL3210-1PH22-7UL0**	**6SL3210-1PH22-7AL0**
30	30	35	**22**	25	27	FSD	**6SL3210-1PH23-5UL0**	**6SL3210-1PH23-5AL0**
37	40	42	**30**	30	35	FSD	**6SL3210-1PH24-2UL0**	**6SL3210-1PH24-2AL0**
45	50	52	**37**	40	42	FSE	**6SL3210-1PH25-2UL0**	**6SL3210-1PH25-2AL0**
55	60	62	**45**	50	52	FSE	**6SL3210-1PH26-2UL0**	**6SL3210-1PH26-2AL0**
75	75	80	**55**	60	62	FSF	**6SL3210-1PH28-0UL0**	**6SL3210-1PH28-0AL0**
90	100	100	**75**	75	80	FSF	**6SL3210-1PH31-0UL0**	**6SL3210-1PH31-0AL0**
110	100	115	**90**	100	100	FSF	**6SL3210-1PH31-2UL0**	**6SL3210-1PH31-2AL0**
132	125	142	**110**	100	115	FSF	**6SL3210-1PH31-4UL0**	**6SL3210-1PH31-4AL0**

PM240-2 Power Modules push-through variant

Type rating [1]		Rated output current I_{rated} [5]	Power based on the base-load current [3]		Base-load current I_H [3]	Frame size	PM240-2 Power Module push-through variant without integrated line filter	PM240-2 Power Module push-through variant with integrated line filter class A
kW	hp	A	kW	hp	A	(Frame size)	Article No.	Article No.
200 ... 240 V 1 AC/3 AC								
0.75	1	3.9	**0.55**	0.75	3	FSA	**6SL3211-1PB13-8UL0**	**6SL3211-1PB13-8AL0**
2.2	3	10.4	**1.5**	2	7.4	FSB	**6SL3211-1PB21-0UL0**	**6SL3211-1PB21-0AL0**
4	5	17.5	**3**	4	13.6	FSC	**6SL3211-1PB21-8UL0**	**6SL3211-1PB21-8AL0**
380 ... 480 V 3 AC								
3	4	7.7	**2.2**	7.5	5.9	FSA	**6SL3211-1PE18-0UL1**	**6SL3211-1PE18-0AL1**
7.5	10	18	**5.5**	7.5	13.2	FSB	**6SL3211-1PE21-8UL0**	**6SL3211-1PE21-8AL0**
15	20	32	**11**	15	26	FSC	**6SL3211-1PE23-3UL0**	**6SL3211-1PE23-3AL0**

Shield connection kit for Power Modules

The shield connection kit makes it easier to connect the shields of supply and control cables, provides mechanical strain relief and thus ensures optimum EMC performance. The shield connection kit is included in the scope of delivery of PM240-2 Power Modules.

[1] Type rating based on the rated output current I_{rated}. The rated output current I_{rated} is based on the duty cycle for low overload (LO).

[2] The rated output current I_{rated} is based on the duty cycle for low overload (LO). These current values are valid for 200 V, 400 V or 690 V and are specified on the rating plate of the Power Module.

[3] The base-load current I_H is based on the duty cycle for high overload (HO).

[4] SIPLUS components for extreme requirements are available. Additional information is available on the Internet at www.siemens.com/siplus-drives

[5] The rated output current I_{rated} is based on the duty cycle for low overload (LO). These current values are valid for 200 V or 400 V and are specified on the rating plate of the Power Module.

© Siemens AG 2017

Technical specifications

General technical specifications

Unless explicitly specified otherwise, the following technical specifications are valid for all PM240-2 Power Modules in the blocksize format, FSA to FSF.

Note:

When engineering the complete SINAMICS S120 drive, the system data of the associated Control Units, supplementary system components, DC link components and Sensor Modules must be taken into consideration.

Electrical specifications	
Line voltage	
• Blocksize format FSA ... FSC	200 to 240 V 1 AC ±10 % 200 to 240 V 3 AC ±10 % 380 to 480 V 3 AC ±10 %
• Blocksize format FSD to FSF	200 … 240 V 3 AC ±10 % (in operation -20 % <1 min) 380 ... 480 V 3 AC ±10 % (in operation -20 % <1 min) 500 … 690 V 3 AC ±10 % (in operation -20 % <1 min)
Line system configurations	Grounded TN/TT systems and non-grounded IT systems
Line frequency	47 ... 63 Hz
Line power factor for a 3 AC line supply voltage and output power	
• Blocksize format FSA ... FSC	
- Fundamental power factor (cos φ_1)	>0.96
- Total (λ)	> 0.7 – 0.85
• Blocksize format FSD to FSF	
- Fundamental power factor (cos φ_1)	> 0.98 – 0.99
- Total (λ)	> 0.9 – 0.92
Electromagnetic compatibility [1)]	
• Interference immunity	All PM240-2 Power Modules are suitable for use in both the first and second environments.
• Interference emission acc. to EN 61800-3 **Second environment**	
- For devices with integrated radio suppression interference filter	Category C2
- For devices with integrated radio suppression interference filter, format FSF with a line supply voltage of 690 V	Category C3
- For devices without integrated radio interference suppression filter with optional external radio interference filter for grounded line supplies	Category C2 (recommended for operation in conjunction with a residual current protective device RCD)
- For devices without integrated radio interference suppression filter for operation on IT line supplies	Category C4
• Interference emission acc. to EN 61800-3 **First environment**	Can be used in the first environment when taking into consideration the additional secondary conditions listed in Section, EMC notes
Overvoltage category acc. to IEC/EN 61800-5-1	III
Electronics power supply implemented as PELV circuit according to IEC/EN 61800-5-1	24 V DC, -15 % +20 % Ground = negative pole grounded via the electronics
Short-circuit current rating (SCCR) (Short Circuit Current Rating) Applies to industrial control cabinet installations according to NEC Article 409 or UL 508A	100 kA See the recommended line-side components – the value depends on the fuses and circuit breakers used
Rated pulse frequency	
• For devices with a rated voltage of 200 V 1/3 AC, 400 V 3 AC and a type rating ≤ 90 kW based on I_{rated}	4 kHz
• For devices with a rated voltage of 690 V 3 AC and a type rating ≥ 110 kW based on I_{rated}	2 kHz
Output voltage, max.	Approximately 0.95 × line voltage (at 200 V 1 AC, approximately 0.74 × line voltage)
Output frequency	0 ... 550 Hz (dependencies on the control mode and pulse frequency must be taken into account)

Footnotes see next page.

© Siemens AG 2017

Technical specifications (continued)

Mechanical specifications			
Type of cooling	Internal air cooling, power units with forced air cooling using integrated fans External air cooling (push-through cooling) for push-through device versions		
Degree of protection acc. to EN 60529	IP20		
Protection class			
• Line circuits with protective conductor connection according to IEC/EN 61800-5-1	I		
• Electronic circuits	Safety extra low-voltage PELV/SELV		
Touch protection according to EN 50274/DGUV regulation 3 when used as intended			
• Internal air cooling	Forced air cooling AF to EN 60146		
• External air cooling	Push-through cooling for push-through device versions		
Ambient conditions			
	Storage In the product packaging	**Transport** In transport packaging	**Operation**
Ambient temperature	Class 1K4 acc. to EN 60721-3-1 -25 ... +55 °C (-13 ... +131 °F)	Class 2K4 acc. to EN 60721-3-2 -40 ... +70 °C (-40 ...+158 °F)	Class 3K3 [2] acc. to EN 60721-3-3 For operation without derating [3]: -10 ... +40 °C (14 ...104 °F) (for operation with low overload) -10 ... +50 °C (14 ...122 °F) (for operation with high overload) For operation with derating: >40 ... +60 °C (104 ...140 °F)
Relative humidity (oil mist, salt mist, ice, condensation, dripping water, spraying water and water jets are not permitted)	Class 1K4 acc. to EN 60721-3-1 5 ... 95 %	Class 2K3 acc. to EN 60721-3-2 5 ... 95 % at 40 °C (104 °F)	Class 3K3 [2] acc. to EN 60721-3-3 5 ... 95 %
Environmental class/ harmful chemical substances	Class 1C2 acc. to EN 60721-3-1	Class 2C2 acc. to EN 60721-3-2	Class 3C2 acc. to EN 60721-3-3
Organic/biological influences	Class 1B1 acc. to EN 60721-3-1	Class 2B1 acc. to EN 60721-3-2	Class 3B1 acc. to EN 60721-3-3
Degree of pollution acc. to IEC/EN 61800-5-1 (condensation not permissible)	2		
Installation altitude			
• For operation with low overload	Up to 1000 m (3281 ft) above sea level without derating		
• For operation with high overload	Up to 2000 m (6562 ft) above sea level without derating		
• From 2000 m (6562 ft) up to 4000 m (13124 ft) above sea level observe the derating characteristics	See characteristic for current derating as a function of the installation altitude and/or reduction of the ambient temperature by 3.5 K per 500 m (1640 ft)		
Mechanical strength			
	Storage In the product packaging	**Transport** In transport packaging	**Operation**
Vibratory load	Class 1M2 acc. to EN 60721-3-1	Class 2M3 acc. to EN 60721-3-2	Class 3M1 acc. to EN 60721-3-3 Test values acc. to EN 60068-2-6
Shock load	Class 1M2 acc. to EN 60721-3-1	Class 2M3 acc. to EN 60721-3-2	Class 3M1 acc. to EN 60721-3-3 Test values acc. to EN 60068-2-27
Certificates			
Declarations of conformity	CE (Low Voltage, EMC and Machinery Directives)		
Certificates of suitability			
• Blocksize format FSA ... FSC	cULus according to UL 61800-5-1; CSA only with external surge voltage protection device; RCM; SEMI F47		
• Blocksize format FSD to FSF	cULus acc. to UL 61800-5-1; CSA only with external surge voltage protection device; RCM; SEMI F47 KCC only with internal or external line filters, Category C2; RoHS; EAC WEEE (Waste Electrical & Electronic Equipment)		

[1] Observe the EMC notes in section configuration notes.

[2] Better than 3K3 through increased ruggedness regarding the temperature range and humidity.

[3] Also carefully observe the permissible temperatures for the Control Unit and where relevant, the operator panel.

© Siemens AG 2017

Technical specifications (continued)

PM240-2 Power Modules standard variant

Line voltage 200 ... 240 V 1 AC/3 AC		PM240-2 Power Modules standard variant				
Without integrated line filter		6SL3210-1PB13-0UL0	6SL3210-1PB13-8UL0	6SL3210-1PB15-5UL0	6SL3210-1PB17-4UL0	6SL3210-1PB21-0UL0
With integrated line filter class A		6SL3210-1PB13-0AL0	6SL3210-1PB13-8AL0	6SL3210-1PB15-5AL0	6SL3210-1PB17-4AL0	6SL3210-1PB21-0AL0
Output current at 50 Hz 230 V 1 AC						
• Rated current I_{rated} [1]	A	3	3.9	5.5	7.4	10.4
• For S6 duty (40 %) I_{S6}	A	3.3	4.3	6.1	8.2	11.5
• Base-load current I_H [2]	A	2.3	3	3.9	5.5	7.4
• Maximum current I_{max}	A	4.6	6	8.3	11.1	15.6
Type rating						
• Based on I_{rated}	kW (hp)	0.55 (0.75)	0.75 (1)	1.1 (1.5)	1.5 (2)	2.2 (3)
• Based on I_H	kW (hp)	0.37 (0.5)	0.55 (0.75)	0.75 (1)	1.1 (1.5)	1.5 (2)
Rated pulse frequency	kHz	4	4	4	4	4
Efficiency η	%	>96	>96	>96	>96	>96
Power loss [3] at rated current	kW	0.04	0.04	0.05	0.07	0.12
Cooling air requirement	m^3/s (ft^3/s)	0.005 (0.18)	0.005 (0.18)	0.0092 (0.325)	0.0092 (0.325)	0.0092 (0.325)
Sound pressure level L_{pA} (1 m)	dB	<50	<50	<62	<62	<62
24 V DC power supply for Control Unit	A	1	1	1	1	1
Input current [4]						
• Rated current 1 AC/3 AC	A	7.5/4.3	9.6/5.5	13.5/7.8	18.1/10.5	24/13.9
• Based on I_H 1 AC/3 AC	A	6.6/3.8	8.4/4.8	11.8/6.8	15.8/9.1	20.9/12.1
Line supply connection U1/L1, V1/L2, W1/L3		Terminal connector	Terminal connector	Terminal connector	Terminal connector	Terminal connector
• Conductor cross-section	mm^2	1.5 ... 2.5	1.5 ... 2.5	1.5 ... 6	1.5 ... 6	1.5 ... 6
Motor connection U2, V2, W2		Terminal connector	Terminal connector	Terminal connector	Terminal connector	Terminal connector
• Conductor cross-section	mm^2	1.5 ... 2.5	1.5 ... 2.5	1.5 ... 6	1.5 ... 6	1.5 ... 6
PE connection		Included in terminal connector	Included in terminal connector	Included in terminal connector	Included in terminal connector	Included in terminal connector
Motor cable length, max.						
• Shielded	m (ft)	50 (164)	50 (164)	50 (164)	50 (164)	50 (164)
• Unshielded	m (ft)	100 (328)	100 (328)	100 (328)	100 (328)	100 (328)
Degree of protection		IP20	IP20	IP20	IP20	IP20
Dimensions						
• Width	mm (in)	73 (2.87)	73 (2.87)	100 (3.94)	100 (3.94)	100 (3.94)
• Height	mm (in)	196 (7.72)	196 (7.72)	291 (11.46)	291 (11.46)	291 (11.5)
• Depth without operator panel	mm (in)	165 (6.50)	165 (6.50)	165 (6.50)	165 (6.50)	165 (6.50)
Frame size		FSA	FSA	FSB	FSB	FSB
Weight, approx.						
• Without integrated line filter	kg (lb)	1.4 (3.09)	1.4 (3.09)	2.9 (6.39)	2.9 (6.39)	2.9 (6.39)
• With integrated line filter	kg (lb)	1.6 (3.53)	1.6 (3.53)	3.1 (6.84)	3.1 (6.84)	3.1 (6.84)

[1] The rated output current I_{rated} is based on the duty cycle for low overload (LO).

[2] The base-load current I_H is based on the duty cycle for high overload (HO).

[3] Typical values. You can find additional information on the Internet at https://support.industry.siemens.com/cs/document/94059311

[4] The input current depends on the motor load and line impedance. The input currents apply for a load with the type rating (based on I_{rated}) for a line impedance corresponding to u_k = 1 %. The current values are specified on the rating plate of the Power Module.

© Siemens AG 2017

Technical specifications (continued)

Line voltage 200 ... 240 V 1 AC/3 AC		**PM240-2 Power Modules standard variant**	
Without integrated line filter		6SL3210-1PB21-4UL0	6SL3210-1PB21-8UL0
With integrated line filter class A		6SL3210-1PB21-4AL0	6SL3210-1PB21-8AL0
Output current at 50 Hz 230 V 1 AC			
• Rated current I_{rated} [1]	A	13.6	17.5
• For S6 duty (40 %) I_{S6}	A	15	19.3
• Base-load current I_H [2]	A	10.4	13.6
• Maximum current I_{max}	A	20.8	27.2
Type rating			
• Based on I_{rated}	kW (hp)	3 (4)	4 (5)
• Based on I_H	kW (hp)	2.2 (3)	3 (4)
Rated pulse frequency	kHz	4	4
Efficiency η	%	>96	>96
Power loss [3] at rated current	kW	0.14	0.18
Cooling air requirement	m^3/s (ft^3/s)	0.0185 (0.7)	0.0185 (0.7)
Sound pressure level L_{pA} (1 m)	dB	<65	<65
24 V DC power supply for Control Unit	A	1	1
Input current [4]			
• Rated current 1 AC/3 AC	A	35.9/20.7	43/24.8
• Based on I_H 1 AC/3 AC	A	31.3/18.1	37.5/21.7
Line supply connection U1/L1, V1/L2, W1/L3		Terminal connector	Terminal connector
• Conductor cross-section	mm^2	6 ... 16	6 ... 16
Motor connection U2, V2, W2		Terminal connector	Terminal connector
• Conductor cross-section	mm^2	6 ... 16	6 ... 16
PE connection		Included in terminal connector	Included in terminal connector
Motor cable length, max.			
• Shielded	m (ft)	50 (164)	50 (164)
• Unshielded	m (ft)	100 (328)	100 (328)
Degree of protection		IP20	IP20
Dimensions			
• Width	mm (in)	140 (5.51)	140 (5.51)
• Height	mm (in)	355 (13.98)	355 (13.98)
• Depth without operator panel	mm (in)	165 (6.50)	165 (6.50)
Frame size		FSC	FSC
Weight, approx.			
• Without integrated line filter	kg (lb)	5 (11)	5 (11)
• With integrated line filter	kg (lb)	5.2 (11.5)	5.2 (11.5)

[1] The rated output current I_{rated} is based on the duty cycle for low overload (LO).

[2] The base-load current I_H is based on the duty cycle for high overload (HO).

[3] Typical values. You can find additional information on the Internet at https://support.industry.siemens.com/cs/document/94059311

[4] The input current depends on the motor load and line impedance. The input currents apply for a load with the type rating (based on I_{rated}) for a line impedance corresponding to u_k = 1 %. The current values are specified on the rating plate of the Power Module.

© Siemens AG 2017

Technical specifications (continued)

Line voltage 200 ... 240 V 3 AC		**PM240-2 Power Modules standard variant**				
Without integrated line filter		6SL3210-1PC22-2UL0	6SL3210-1PC22-8UL0	6SL3210-1PC24-2UL0	6SL3210-1PC25-4UL0	6SL3210-1PC26-8UL0
With integrated line filter class A		6SL3210-1PC22-2AL0	6SL3210-1PC22-8AL0	–	–	–
Output current at 50 Hz 230 V 3 AC						
• Rated current I_{rated} [1]	A	22	28	42	54	68
• For S6 duty (40 %) I_{S6}	A	24.2	30.8	50	64	81
• Base-load current I_H [2]	A	17.5	22	35	42	54
• Maximum current I_{max}	A	35	44	70	84	108
Type rating						
• Based on I_{rated}	kW (hp)	5.5 (7.5)	7.5 (10)	11 (15)	15 (20)	18.5 (25)
• Based on I_H	kW (hp)	4 (5)	5.5 (7.5)	7.5 (10)	11 (15)	15 (20)
Rated pulse frequency	kHz	4	4	4	4	4
Efficiency η	%	>97	>97	>97	>97	>97
Power loss [3] at rated current	kW	0.2	0.26	0.42	0.57	0.76
Cooling air requirement	m^3/s (ft^3/s)	0.0185 (0.65)	0.0185 (0.65)	0.055 (1.9)	0.055 (1.9)	0.055 (1.9)
Sound pressure level L_{pA} (1 m)	dB	<65	<65	45 ... 65 [4]	45 ... 65 [4]	45 ... 65 [4]
24 V DC power supply for Control Unit	A	1	1	1	1	1
Input current [5]						
• Rated current	A	28.6	36.4	44	56	70
• Based on I_H	A	26.2	33	36	43	56
Line supply connection U1/L1, V1/L2, W1/L3		Terminal connector	Terminal connector	Screw terminals	Screw terminals	Screw terminals
• Conductor cross-section	mm^2	6 ... 16	6 ... 16	10 ... 35	10 ... 35	10 ... 35
Motor connection U2, V2, W2		Terminal connector	Terminal connector	Screw terminals	Screw terminals	Screw terminals
• Conductor cross-section	mm^2	6 ... 16	6 ... 16	10 ... 35	10 ... 35	10 ... 35
PE connection		Included in terminal connector	Included in terminal connector	Screw terminals	Screw terminals	Screw terminals
Motor cable length, max.						
• Shielded	m (ft)	50 (164)	50 (164)	200 (656)	200 (656)	200 (656)
• Unshielded	m (ft)	100 (328)	100 (328)	300 (984)	300 (984)	300 (984)
Degree of protection		IP20	IP20	IP20	IP20	IP20
Dimensions						
• Width	mm (in)	140 (5.51)	140 (5.51)	200 (7.87)	200 (7.87)	200 (7.87)
• Height	mm (in)	355 (13.98)	355 (13.98)	472 (18.58)	472 (18.58)	472 (18.58)
• Depth without operator panel	mm (in)	165 (6.50)	165 (6.50)	237 (9.33)	237 (9.33)	237 (9.33)
Frame size		FSC	FSC	FSD	FSD	FSD
Weight, approx.						
• Without integrated line filter	kg (lb)	5 (11)	5 (11)	17 (37.5)	17 (37.5)	17 (37.5)
• With integrated line filter	kg (lb)	5.2 (11.5)	5.2 (11.5)	–	–	–

[1] The rated output current I_{rated} is based on the duty cycle for low overload (LO).

[2] The base-load current I_H is based on the duty cycle for high overload (HO).

[3] Typical values. You can find additional information on the Internet at https://support.industry.siemens.com/cs/document/94059311

[4] Values dependent on ambient temperature and utilization.

[5] The input current depends on the motor load and line impedance. The input currents apply for a load with the type rating (based on I_{rated}) for a line impedance corresponding to u_k = 1 %. The current values are specified on the rating plate of the Power Module.

© Siemens AG 2017

Technical specifications (continued)

Line voltage 200 ... 240 V 3 AC		**PM240-2 Power Modules standard variant**				
Without integrated line filter		6SL3210-1PC28-0UL0	6SL3210-1PC31-1UL0	6SL3210-1PC31-3UL0	6SL3210-1PC31-6UL0	6SL3210-1PC31-8UL0
With integrated line filter class A		–	–	–	–	–
Output current at 50 Hz 230 V 3 AC						
• Rated current I_{rated} [1]	A	80	104	130	154	178
• For S6 duty (40 %) I_{S6}	A	96	124	156	184	213
• Base-load current I_H [2]	A	68	80	104	130	154
• Maximum current I_{max}	A	136	160	208	260	308
Type rating						
• Based on I_{rated}	kW (hp)	22 (30)	30 (40)	37 (50)	45 (60)	55 (75)
• Based on I_H	kW (hp)	18.5 (25)	22 (30)	30 (40)	37 (50)	45 (60)
Rated pulse frequency	kHz	4	4	4	4	4
Efficiency η	%	>97	>97	>97	>97	>97
Power loss [3] at rated current	kW	0.85	1.2	1.44	1.79	2.18
Cooling air requirement	m^3/s (ft^3/s)	0.083 (2.9)	0.083 (2.9)	0.153 (5.4)	0.153 (5.4)	0.153 (5.4)
Sound pressure level L_{pA} (1 m)	dB	44 ... 62 [4]	44 ... 62 [4]	56 ... 68 [4]	56 ... 68 [4]	56 ... 68 [4]
24 V DC power supply for Control Unit	A	1	1	1	1	1
Input current [5]						
• Rated current	A	83	107	134	158	183
• Based on I_H	A	71	83	110	138	164
Line supply connection U1/L1, V1/L2, W1/L3		Screw terminals	Screw terminals	M10 screw stud	M10 screw stud	M10 screw stud
• Conductor cross-section	mm^2	25 ... 70	25 ... 70	35 ... 2 × 120	35 ... 2 × 120	35 ... 2 × 120
Motor connection U2, V2, W2		Screw terminals	Screw terminals	M10 screw stud	M10 screw stud	M10 screw stud
• Conductor cross-section	mm^2	25 ... 70	25 ... 70	35 ... 2 × 120	35 ... 2 × 120	35 ... 2 × 120
PE connection		Screw terminals	Screw terminals	M10 screw stud	M10 screw stud	M10 screw stud
Motor cable length, max.						
• Shielded	m (ft)	200 (656)	200 (656)	300 (984)	300 (984)	300 (984)
• Unshielded	m (ft)	300 (984)	300 (984)	450 (1476)	450 (1476)	450 (1476)
Degree of protection		IP20	IP20	IP20	IP20	IP20
Dimensions						
• Width	mm (in)	275 (10.83)	275 (10.83)	305 (12.01)	305 (12.01)	305 (12.01)
• Height	mm (in)	551 (21.69)	551 (21.69)	708 (27.87)	708 (27.87)	708 (27.87)
• Depth without operator panel	mm (in)	237 (9.33)	237 (9.33)	357 (14.06)	357 (14.06)	357 (14.06)
Frame size		FSE	FSE	FSF	FSF	FSF
Weight, approx.						
• Without integrated line filter	kg (lb)	26 (57.3)	26 (57.3)	57 (126)	57 (126)	57 (126)
• With integrated line filter	kg (lb)	–	–	–	–	–

[1] The rated output current I_{rated} is based on the duty cycle for low overload (LO).

[2] The base-load current I_H is based on the duty cycle for high overload (HO).

[3] Typical values. You can find additional information on the Internet at https://support.industry.siemens.com/cs/document/94059311

[4] Values dependent on ambient temperature and utilization.

[5] The input current depends on the motor load and line impedance. The input currents apply for a load with the type rating (based on I_{rated}) for a line impedance corresponding to u_k = 1 %. The current values are specified on the rating plate of the Power Module.

© Siemens AG 2017

Technical specifications (continued)

Line voltage 380 ... 480 V 3 AC		PM240-2 Power Modules standard variant					
Without integrated line filter		6SL3210-1PE11-8UL1	6SL3210-1PE12-3UL1	6SL3210-1PE13-2UL1	6SL3210-1PE14-3UL1	6SL3210-1PE16-1UL1	6SL3210-1PE18-0UL1
With integrated line filter class A		6SL3210-1PE11-8AL1	6SL3210-1PE12-3AL1	6SL3210-1PE13-2AL1	6SL3210-1PE14-3AL1	6SL3210-1PE16-1AL1	6SL3210-1PE18-0AL1
Output current at 50 Hz 400 V 3 AC							
• Rated current I_{rated} [1]	A	1.7	2.2	3.1	4.1	5.9	7.7
• For S6 duty (40 %) I_{S6}	A	2	2.5	3.5	4.5	6.5	8.5
• Base-load current I_H [2]	A	1.3	1.7	2.2	3.1	4.1	5.9
• Maximum current I_{max}	A	2.6	3.4	4.7	6.2	8.9	11.8
Type rating							
• Based on I_{rated}	kW (hp)	0.55 (0.75)	0.75 (1)	1.1 (1.5)	1.5 (2)	2.2 (3)	3 (4)
• Based on I_H	kW (hp)	0.37 (0.5)	0.55 (0.75)	0.75 (1)	1.1 (1.5)	1.5 (2)	2.2 (3)
Rated pulse frequency	kHz	4	4	4	4	4	4
Efficiency η	%	>96	>96	>96	>96	>96	>96
Power loss [3] at rated current	kW	0.04	0.04	0.04	0.07	0.1	0.12
Cooling air requirement	m^3/s (ft^3/s)	0.005 (0.18)	0.005 (0.18)	0.005 (0.18)	0.005 (0.18)	0.005 (0.18)	0.005 (0.18)
Sound pressure level L_{pA} (1 m)	dB	<50	<50	<50	<50	< 56.3	< 56.3
24 V DC power supply for Control Unit	A	1	1	1	1	1	1
Input current [4]							
• Rated current	A	2.3	2.9	4.1	5.5	7.7	10.1
• Based on I_H	A	2	2.6	3.3	4.7	6.1	8.8
Line supply connection U1/L1, V1/L2, W1/L3		Terminal connector	Terminal connector	Terminal connector	Terminal connector	Terminal connector	Terminal connector
• Conductor cross-section	mm^2	1 ... 2.5	1 ... 2.5	1 ... 2.5	1 ... 2.5	1 ... 2.5	1 ... 2.5
Motor connection U2, V2, W2		Terminal connector	Terminal connector	Terminal connector	Terminal connector	Terminal connector	Terminal connector
• Conductor cross-section	mm^2	1 ... 2.5	1 ... 2.5	1 ... 2.5	1 ... 2.5	1 ... 2.5	1 ... 2.5
PE connection		Included in terminal connector	Included in terminal connector	Included in terminal connector	Included in terminal connector	Included in terminal connector	Included in terminal connector
Motor cable length, max.							
• Without filter, shielded/unshielded	m (ft)	150/150 (492/492)	150/150 (492/492)	150/150 (492/492)	150/150 (492/492)	150/150 (492/492)	150/150 (492/492)
• With integrated filter class A, shielded/unshielded	m (ft)	50/100 (164/328)	50/100 (164/328)	50/100 (164/328)	50/100 (164/328)	50/100 (164/328)	50/100 (164/328)
Degree of protection		IP20	IP20	IP20	IP20	IP20	IP20
Dimensions							
• Width	mm (in)	73 (2.87)	73 (2.87)	73 (2.87)	73 (2.87)	73 (2.87)	73 (2.87)
• Height	mm (in)	196 (7.72)	196 (7.72)	196 (7.72)	196 (7.72)	196 (7.72)	196 (7.72)
• Depth without operator panel	mm (in)	165 (6.50)	165 (6.50)	165 (6.50)	165 (6.50)	165 (6.50)	165 (6.50)
Frame size		FSA	FSA	FSA	FSA	FSA	FSA
Weight, approx.							
• Without integrated line filter	kg (lb)	1.4 (3.09)	1.4 (3.09)	1.4 (3.09)	1.4 (3.09)	1.4 (3.09)	1.4 (3.09)
• With integrated line filter	kg (lb)	1.5 (3.31)	1.5 (3.31	1.5 (3.31)	1.5 (3.31)	1.5 (3.31)	1.5 (3.31)

[1] The rated output current I_{rated} is based on the duty cycle for low overload (LO).

[2] The base-load current I_H is based on the duty cycle for high overload (HO).

[3] Typical values. You can find additional information on the Internet at https://support.industry.siemens.com/cs/document/94059311

[4] The input current depends on the motor load and line impedance. The input currents apply for a load with the type rating (based on I_{rated}) for a line impedance corresponding to u_k = 1 %. The current values are specified on the rating plate of the Power Module.

© Siemens AG 2017

Technical specifications (continued)

Line voltage 380 ... 480 V 3 AC		**PM240-2 Power Modules standard variant**				
Without integrated line filter		6SL3210-1PE21-1UL0	6SL3210-1PE21-4UL0	6SL3210-1PE21-8UL0	6SL3210-1PE22-7UL0	6SL3210-1PE23-3UL0
With integrated line filter class A		6SL3210-1PE21-1AL0	6SL3210-1PE21-4AL0	6SL3210-1PE21-8AL0	6SL3210-1PE22-7AL0	6SL3210-1PE23-3AL0
Output current at 50 Hz 400 V 3 AC						
• Rated current I_{rated} [1]	A	10.2	13.2	18	26	32
• For S6 duty (40 %) I_{S6}	A	11.2	14.5	19.8	28.6	37.1
• Base-load current I_H [2]	A	7.7	10.2	13.2	18	26
• Maximum current I_{max}	A	15.4	20.4	27	39	52
Type rating						
• Based on I_{rated}	kW (hp)	4 (5)	5.5 (7.5)	7.5 (10)	11 (15)	15 (20)
• Based on I_H	kW (hp)	3 (4)	4 (5)	5.5 (7.5)	7.5 (10)	11 (15)
Rated pulse frequency	kHz	4	4	4	4	4
Efficiency η	%	>97	>97	>97	>97	>97
Power loss [3] at rated current	kW	0.11	0.15	0.2	0.3	0.37
Cooling air requirement	m^3/s (ft^3/s)	0.0092 (0.2)	0.0092 (0.2)	0.0092 (0.2)	0.0185 (0.65)	0.0185 (0.65)
Sound pressure level L_{pA} (1 m)	dB	<62	<62	<62	<65	<65
24 V DC power supply for Control Unit	A	1	1	1	1	1
Input current [4]						
• Rated current	A	13.3	17.2	22.2	32.6	39.9
• Based on I_H	A	11.6	15.3	19.8	27	36
Line supply connection U1/L1, V1/L2, W1/L3		Terminal connector	Terminal connector	Terminal connector	Terminal connector	Terminal connector
• Conductor cross-section	mm^2	1.5 ... 6	1.5 ... 6	1.5 ... 6	6 ... 16	6 ... 16
Motor connection U2, V2, W2		Terminal connector	Terminal connector	Terminal connector	Terminal connector	Terminal connector
• Conductor cross-section	mm^2	1.5 ... 6	1.5 ... 6	1.5 ... 6	6 ... 16	6 ... 16
PE connection		Included in terminal connector	Included in terminal connector	Included in terminal connector	Included in terminal connector	Included in terminal connector
Motor cable length, max.						
• Without filter, shielded/unshielded	m (ft)	150/150 (492/492)	150/150 (492/492)	150/150 (492/492)	150/150 (492/492)	150/150 (492/492)
• With integrated filter class A, shielded/unshielded	m (ft)	100/100 (328/328) [5]	100/100 (328/328) [5]	100/100 (328/328) [5]	150/150 (492/492) [5]	150/150 (492/492) [5]
Degree of protection		IP20	IP20	IP20	IP20	IP20
Dimensions						
• Width	mm (in)	100 (3.94)	100 (3.94)	100 (3.94)	140 (5.51)	140 (5.51)
• Height	mm (in)	291 (11.46)	291 (11.46)	291 (11.46)	355 (13.98)	355 (13.98)
• Depth without operator panel	mm (in)	165 (6.50)	165 (6.50)	165 (6.50)	165 (6.50)	165 (6.50)
Frame size		FSB	FSB	FSB	FSC	FSC
Weight, approx.						
• Without integrated line filter	kg (lb)	2.9 (6.39)	2.9 (6.39)	3 (6.62)	4.7 (10.4)	4.8 (10.6)
• With integrated line filter	kg (lb)	3.1 (6.84)	3.1 (6.84)	3.2 (7.06)	5.3 (11.7)	5.4 (11.9)

[1] The rated output current I_{rated} is based on the duty cycle for low overload (LO).

[2] The base-load current I_H is based on the duty cycle for high overload (HO).

[3] Typical values. You can find additional information on the Internet at https://support.industry.siemens.com/cs/document/94059311

[4] The input current depends on the motor load and line impedance. The input currents apply for a load with the type rating (based on I_{rated}) for a line impedance corresponding to u_k = 1 %. The current values are specified on the rating plate of the Power Module.

[5] The values are applicable for low capacitance cables, e.g. MOTION-CONNECT. For standard CY cables the max. permissible motor cable length is 50 m (164 ft) (shielded).

© Siemens AG 2017

Technical specifications (continued)

Line voltage 380 ... 480 V 3 AC		**PM240-2 Power Modules standard variant**					
Without integrated line filter		6SL3210-1PE23-8UL0	6SL3210-1PE24-5UL0	6SL3210-1PE26-0UL0	6SL3210-1PE27-5UL0	6SL3210-1PE28-8UL0	6SL3210-1PE31-1UL0
With integrated line filter class A		6SL3210-1PE23-8AL0	6SL3210-1PE24-5AL0	6SL3210-1PE26-0AL0	6SL3210-1PE27-5AL0	6SL3210-1PE28-8AL0	6SL3210-1PE31-1AL0
Output current at 50 Hz 400 V 3 AC							
• Rated current I_{rated} [1]	A	38	45	60	75	90	110
• For S6 duty (40 %) I_{S6}	A	45	54	72	90	108	132
• Base-load current I_H [2]	A	32	38	45	60	75	90
• Maximum current I_{max}	A	64	76	90	120	150	180
Type rating							
• Based on I_{rated}	kW (hp)	18.5 (25)	22 (30)	30 (40)	37 (50)	45 (60)	55 (75)
• Based on I_H	kW (hp)	15 (20)	18.5 (25)	22 (30)	30 (40)	37 (50)	45 (60)
Rated pulse frequency	kHz	4	4	4	4	4	4
Efficiency η	%	>97	>97	>97	>97	>97	>97
Power loss [3] at rated current	kW	0.55	0.68	0.77	1.02	1.2	1.55
Cooling air requirement	m^3/s (ft^3/s)	0.055 (1.9)	0.055 (1.9)	0.055 (1.9)	0.055 (1.9)	0.083 (2.9)	0.083 (2.9)
Sound pressure level L_{pA} (1 m)	dB	45 ... 65 [4]	45 ... 65 [4]	45 ... 65 [4]	45 ... 65 [4]	44 ... 62 [4]	44 ... 62 [4]
24 V DC power supply for Control Unit	A	1	1	1	1	1	1
Input current [5]							
• Rated current	A	39	47	62	77	93	113
• Based on I_H	A	33	38	47	62	78	94
Line supply connection U1/L1, V1/L2, W1/L3		Screw terminals	Screw terminals	Screw terminals	Screw terminals	Screw terminals	Screw terminals
• Conductor cross-section	mm^2	10 ... 35	10 ... 35	10 ... 35	10 ... 35	25 ... 70	25 ... 70
Motor connection U2, V2, W2		Screw terminals	Screw terminals	Screw terminals	Screw terminals	Screw terminals	Screw terminals
• Conductor cross-section	mm^2	10 ... 35	10 ... 35	10 ... 35	10 ... 35	25 ... 70	25 ... 70
PE connection		Screw terminals	Screw terminals	Screw terminals	Screw terminals	Screw terminals	Screw terminals
Motor cable length, max.							
• Shielded	m (ft)	200 (656)	200 (656)	200 (656)	200 (656)	200 (656)	200 (656)
• Unshielded	m (ft)	300 (984)	300 (984)	300 (984)	300 (984)	300 (984)	300 (984)
Degree of protection		IP20	IP20	IP20	IP20	IP20	IP20
Dimensions							
• Width	mm (in)	200 (7.87)	200 (7.87)	200 (7.87)	200 (7.87)	275 (10.83)	275 (10.83)
• Height	mm (in)	472 (18.58)	472 (18.58)	472 (18.58)	472 (18.58)	551 (21.69)	551 (21.69)
• Depth without operator panel	mm (in)	237 (9.33)	237 (9.33)	237 (9.33)	237 (9.33)	237 (9.33)	237 (9.33)
Frame size		FSD	FSD	FSD	FSD	FSE	FSE
Weight, approx.							
• Without integrated line filter	kg (lb)	16 (35.3)	16 (35.3)	17 (37.5)	17 (37.5)	26 (57.3)	26 (57.3)
• With integrated line filter	kg (lb)	17.5 (38.6)	17.5 (38.6)	18.5 (40.8)	18.5 (40.8)	28 (61.7)	28 (61.7)

[1] The rated output current I_{rated} is based on the duty cycle for low overload (LO).

[2] The base-load current I_H is based on the duty cycle for high overload (HO).

[3] Typical values. You can find additional information on the Internet at https://support.industry.siemens.com/cs/document/94059311

[4] Values dependent on ambient temperature and utilization.

[5] The input current depends on the motor load and line impedance. The input currents apply for a load with the type rating (based on I_{rated}) for a line impedance corresponding to u_k = 1 %. The current values are specified on the rating plate of the Power Module.

© Siemens AG 2017

Technical specifications (continued)

Line voltage 380 ... 480 V 3 AC		**PM240-2 Power Modules standard variant**			
Without integrated line filter		6SL3210-1PE31-5UL0	6SL3210-1PE31-8UL0	6SL3210-1PE32-1UL0	6SL3210-1PE32-5UL0
With integrated line filter class A		6SL3210-1PE31-5AL0	6SL3210-1PE31-8AL0	6SL3210-1PE32-1AL0	6SL3210-1PE32-5AL0
Output current at 50 Hz 400 V 3 AC					
• Rated current I_{rated} [1]	A	145	178	205	250
• For S6 duty (40 %) I_{S6}	A	174	213	246	300
• Base-load current I_H [2]	A	110	145	178	205
• Maximum current I_{max}	A	220	290	356	410
Type rating					
• Based on I_{rated}	kW (hp)	75 (100)	90 (125)	110 (150)	132 (200)
• Based on I_H	kW (hp)	55 (75)	75 (100)	90 (125)	110 (150)
Rated pulse frequency	kHz	4	4	2	2
Efficiency η	%	>97	>97	>97	>97
Power loss [3] at rated current	kW	1.79	2.33	2.17	2.84
Cooling air requirement	m^3/s (ft^3/s)	0.2 (7.1)	0.2 (7.1)	0.2 (7.1)	0.2 (7.1)
Sound pressure level L_{pA} (1 m)	dB	56 ... 68 [4]	56 ... 68 [4]	56 ... 68 [4]	56 ... 68 [4]
24 V DC power supply for Control Unit	A	1	1	1	1
Input current [5]					
• Rated current	A	149	183	211	257
• Based on I_H	A	117	154	189	218
Line supply connection U1/L1, V1/L2, W1/L3		M10 screw stud	M10 screw stud	M10 screw stud	M10 screw stud
• Conductor cross-section	mm^2	35 ... 2 × 120	35 ... 2 × 120	35 ... 2 × 120	35 ... 2 × 120
Motor connection U2, V2, W2		M10 screw stud	M10 screw stud	M10 screw stud	M10 screw stud
• Conductor cross-section	mm^2	35 ... 2 × 120	35 ... 2 × 120	35 ... 2 × 120	35 ... 2 × 120
PE connection		M10 screw stud	M10 screw stud	M10 screw stud	M10 screw stud
Motor cable length, max.					
• Shielded	m (ft)	300 (984)	300 (984)	300 (984)	300 (984)
• Unshielded	m (ft)	450 (1476)	450 (1476)	450 (1476)	450 (1476)
Degree of protection		IP20	IP20	IP20	IP20
Dimensions					
• Width	mm (in)	305 (12.01)	305 (12.01)	305 (12.01)	305 (12.01)
• Height	mm (in)	708 (27.87)	708 (27.87)	708 (27.87)	708 (27.87)
• Depth without operator panel	mm (in)	357 (14.06)	357 (14.06)	357 (14.06)	357 (14.06)
Frame size		FSF	FSF	FSF	FSF
Weight, approx.					
• Without integrated line filter	kg (lb)	57 (126)	57 (126)	61 (135)	61 (135)
• With integrated line filter	kg (lb)	63 (139)	63 (139)	65 (143)	65 (143)

1) The rated output current I_{rated} is based on the duty cycle for low overload (LO).

2) The base-load current I_H is based on the duty cycle for high overload (HO).

3) Typical values. You can find additional information on the Internet at https://support.industry.siemens.com/cs/document/94059311

4) Values dependent on ambient temperature and utilization.

5) The input current depends on the motor load and line impedance. The input currents apply for a load with the type rating (based on I_{rated}) for a line impedance corresponding to u_k = 1 %. The current values are specified on the rating plate of the Power Module.

© Siemens AG 2017

Technical specifications (continued)

Line voltage 500 ... 690 V 3 AC		**PM240-2 Power Modules standard variant**					
Without integrated line filter		6SL3210-1PH21-4UL0	6SL3210-1PH22-0UL0	6SL3210-1PH22-3UL0	6SL3210-1PH22-7UL0	6SL3210-1PH23-5UL0	6SL3210-1PH24-2UL0
With integrated line filter class A		6SL3210-1PH21-4AL0	6SL3210-1PH22-0AL0	6SL3210-1PH22-3AL0	6SL3210-1PH22-7AL0	6SL3210-1PH23-5AL0	6SL3210-1PH24-2AL0
Output current at 50 Hz 690 V 3 AC							
• Rated current I_{rated} [1]	A	14	19	23	27	35	42
• For S6 duty (40 %) I_{S6}	A	16	22	27	32	42	50
• Base-load current I_H [2]	A	11	14	19	23	27	35
• Maximum current I_{max}	A	22	29	38	46	54	70
Type rating							
• Based on I_{rated}	kW (hp)	11 (10)	15 (15)	18.5 (20)	22 (25)	30 (30)	37 (40)
• Based on I_H	kW (hp)	7.5 (7.5)	11 (10)	15 (15)	18.5 (20)	22 (25)	30 (30)
Rated pulse frequency	kHz	2	2	2	2	2	2
Efficiency η	%	>98	>98	>98	>98	>98	>98
Power loss [3] at rated current	kW	0.32	0.41	0.48	0.56	0.73	0.88
Cooling air requirement	m^3/s (ft^3/s)	0.055 (1.9)	0.055 (1.9)	0.055 (1.9)	0.055 (1.9)	0.055 (1.9)	0.055 (1.9)
Sound pressure level L_{pA} (1 m)	dB	45 ... 65 [4]	45 ... 65 [4]	45 ... 65 [4]	45 ... 65 [4]	45 ... 65 [4]	45 ... 65 [4]
24 V DC power supply for Control Unit	A	1	1	1	1	1	1
Input current [5]							
• Rated current	A	15	20	24	28	36	44
• Based on I_H	A	11	14	20	24	28	36
Line supply connection U1/L1, V1/L2, W1/L3		Screw terminals	Screw terminals	Screw terminals	Screw terminals	Screw terminals	Screw terminals
• Conductor cross-section	mm^2	10 ... 35	10 ... 35	10 ... 35	10 ... 35	10 ... 35	10 ... 35
Motor connection U2, V2, W2		Screw terminals	Screw terminals	Screw terminals	Screw terminals	Screw terminals	Screw terminals
• Conductor cross-section	mm^2	10 ... 35	10 ... 35	10 ... 35	10 ... 35	10 ... 35	10 ... 35
PE connection		Screw terminals	Screw terminals	Screw terminals	Screw terminals	Screw terminals	Screw terminals
Motor cable length, max.							
• Shielded	m (ft)	200 (656)	200 (656)	200 (656)	200 (656)	200 (656)	200 (656)
• Unshielded	m (ft)	300 (984)	300 (984)	300 (984)	300 (984)	300 (984)	300 (984)
Degree of protection		IP20	IP20	IP20	IP20	IP20	IP20
Dimensions							
• Width	mm (in)	200 (7.87)	200 (7.87)	200 (7.87)	200 (7.87)	200 (7.87)	200 (7.87)
• Height	mm (in)	472 (18.58)	472 (18.58)	472 (18.58)	472 (18.58)	472 (18.58)	472 (18.58)
• Depth without operator panel	mm (in)	237 (9.33)	237 (9.33)	237 (9.33)	237 (9.33)	237 (9.33)	237 (9.33)
Frame size		FSD	FSD	FSD	FSD	FSD	FSD
Weight, approx.							
• Without integrated line filter	kg (lb)	17 (37.5)	17 (37.5)	17 (37.5)	17 (37.5)	17 (37.5)	17 (37.5)
• With integrated line filter	kg (lb)	18.5 (40.8)	18.5 (40.8)	18.5 (40.8)	18.5 (40.8)	18.5 (40.8)	18.5 (40.8)

1) The rated output current I_{rated} is based on the duty cycle for low overload (LO).

2) The base-load current I_H is based on the duty cycle for high overload (HO).

3) Typical values. You can find additional information on the Internet at https://support.industry.siemens.com/cs/document/94059311

4) Values dependent on ambient temperature and utilization.

5) The input current depends on the motor load and line impedance. The input currents apply for a load with the type rating (based on I_{rated}) for a line impedance corresponding to u_k = 1 %. The current values are specified on the rating plate of the Power Module.

© Siemens AG 2017

Technical specifications (continued)

Line voltage 500 ... 690 V 3 AC		**PM240-2 Power Modules standard variant**					
Without integrated line filter		6SL3210-1PH25-2UL0	6SL3210-1PH26-2UL0	6SL3210-1PH28-0UL0	6SL3210-1PH31-0UL0	6SL3210-1PH31-2UL0	6SL3210-1PH31-4UL0
With integrated line filter class A		6SL3210-1PH25-2AL0	6SL3210-1PH26-2AL0	6SL3210-1PH28-0AL0	6SL3210-1PH31-0AL0	6SL3210-1PH31-2AL0	6SL3210-1PH31-4AL0
Output current at 50 Hz 690 V 3 AC							
• Rated current I_{rated} [1]	A	52	62	80	100	115	142
• For S6 duty (40 %) I_{S6}	A	62	74	96	120	138	170
• Base-load current I_H [2]	A	42	52	62	80	100	115
• Maximum current I_{max}	A	84	104	124	160	200	230
Type rating							
• Based on I_{rated}	kW (hp)	45 (50)	55 (60)	75 (75)	90 (100)	110 (100)	132 (125)
• Based on I_H	kW (hp)	37 (40)	45 (50)	55 (60)	75 (75)	90 (100)	110 (100)
Rated pulse frequency	kHz	2	2	2	2	2	2
Efficiency η	%	>98	>98	>98	>98	>98	>98
Power loss [3] at rated current	kW	1	1.21	1.23	1.57	1.83	2.35
Cooling air requirement	m^3/s (ft^3/s)	0.083 (2.9)	0.083 (2.9)	0.083 (2.9)	0.083 (2.9)	0.2 (7.1)	0.2 (7.1)
Sound pressure level L_{pA} (1 m)	dB	44 ... 62 [4]	44 ... 62 [4]	56 ... 68 [4]	56 ... 68 [4]	56 ... 68 [4]	56 ... 68 [4]
24 V DC power supply for Control Unit	A	1	1	1	1	1	1
Input current [5]							
• Rated current	A	50	59	78	97	111	137
• Based on I_H	A	44	54	66	85	106	122
Line supply connection U1/L1, V1/L2, W1/L3		Screw terminals	Screw terminals	M10 screw stud	M10 screw stud	M10 screw stud	M10 screw stud
• Conductor cross-section	mm^2	25 ... 70	25 ... 70	35 ... 2 × 120	35 ... 2 × 120	35 ... 2 × 120	35 ... 2 × 120
Motor connection U2, V2, W2		Screw terminals	Screw terminals	M10 screw stud	M10 screw stud	M10 screw stud	M10 screw stud
• Conductor cross-section	mm^2	25 ... 70	25 ... 70	35 ... 2 × 120	35 ... 2 × 120	35 ... 2 × 120	35 ... 2 × 120
PE connection		Screw terminals	Screw terminals	M10 screw stud	M10 screw stud	M10 screw stud	M10 screw stud
Motor cable length, max.							
• Shielded	m (ft)	200 (656)	200 (656)	300 (984)	300 (984)	300 (984)	300 (984)
• Unshielded	m (ft)	300 (984)	300 (984)	450 (1476)	450 (1476)	450 (1476)	450 (1476)
Degree of protection		IP20	IP20	IP20	IP20	IP20	IP20
Dimensions							
• Width	mm (in)	275 (10.83)	275 (10.83)	305 (12.01)	305 (12.01)	305 (12.01)	305 (12.01)
• Height	mm (in)	551 (21.69)	551 (21.69)	708 (27.87)	708 (27.87)	708 (27.87)	708 (27.87)
• Depth without operator panel	mm (in)	237 (9.33)	237 (9.33)	357 (14.06)	357 (14.06)	357 (14.06)	357 (14.06)
Frame size		FSE	FSE	FSF	FSF	FSF	FSF
Weight, approx.							
• Without integrated line filter	kg (lb)	26 (57.3)	26 (57.3)	60 (132.3)	60 (132.3)	60 (132.3)	60 (132.3)
• With integrated line filter	kg (lb)	28 (61.7)	28 (61.7)	64 (141)	64 (141)	64 (141)	64 (141)

[1] The rated output current I_{rated} is based on the duty cycle for low overload (LO).

[2] The base-load current I_H is based on the duty cycle for high overload (HO).

[3] Typical values. You can find additional information on the Internet at https://support.industry.siemens.com/cs/document/94059311

[4] Values dependent on ambient temperature and utilization.

[5] The input current depends on the motor load and line impedance. The input currents apply for a load with the type rating (based on I_{rated}) for a line impedance corresponding to u_k = 1 %. The current values are specified on the rating plate of the Power Module.

© Siemens AG 2017

Technical specifications (continued)

PM240-2 Power Modules push-through variant

Line voltage 200 ... 240 V 1 AC/3 AC		**PM240-2 Power Modules push-through variant**		
Without integrated line filter		6SL3211-1PB13-8UL0	6SL3211-1PB21-0UL0	6SL3211-1PB21-8UL0
With integrated line filter class A		6SL3211-1PB13-8AL0	6SL3211-1PB21-0AL0	6SL3211-1PB21-8AL0
Output current At 50 Hz 230 V 1 AC/3 AC				
• Rated current I_{rated} [1]	A	3.9	10.4	17.5
• For S6 duty (40 %) I_{S6}	A	3.3	11.5	19.3
• Base-load current I_H [2]	A	3	7.4	13.6
• Maximum current I_{max}	A	6	15.6	27.2
Type rating				
• Based on I_{rated}	kW (hp)	0.75 (1)	2.2 (3)	4 (5)
• Based on I_H	kW (hp)	0.55 (0.75)	1.5 (2)	3 (4)
Rated pulse frequency	kHz	4	4	4
Efficiency η	%	>96	>96	>96
Power loss [3] at rated current	kW	0.04	0.12	0.18
Cooling air requirement	m^3/s (ft^3/s)	0.005 (0.2)	0.0092 (0.3)	0.0185 (0.7)
Sound pressure level L_{pA} (1 m)	dB	<56	<62	<65
24 V DC power supply for Control Unit	A	1	1	1
Input current [4]				
• Rated current 1 AC/3 AC	A	9.6/5.5	24/13.9	43/24.8
• Based on I_H 1 AC/3 AC	A	8.4/4.8	20.9/12.1	37.5/21.7
Line supply connection U1/L1, V1/L2, W1/L3		Screw terminals, plug-in	Screw terminals, plug-in	Screw terminals, plug-in
• Conductor cross-section	mm^2	1.5 ... 2.5	1.5 ... 6	6 ... 16
Motor connection U2, V2, W2		Screw terminals, plug-in	Screw terminals, plug-in	Screw terminals, plug-in
• Conductor cross-section	mm^2	1.5 ... 2.5	1.5 ... 6	6 ... 16
Motor cable length, max.				
• Shielded	m (ft)	150 (492)	150 (492)	150 (492)
• Unshielded	m (ft)	150 (492)	150 (492)	150 (492)
Degree of protection		IP20	IP20	IP20
Dimensions				
• Width	mm (in)	126 (4.96)	154 (6.06)	200 (7.87)
• Height	mm (in)	238 (9.37)	345 (13.58)	411 (16.18)
• Depth without operator panel	mm (in)	171 (6.73)	171 (6.73)	171 (6.73)
Frame size		FSA	FSB	FSC
Weight, approx. With integrated line filter				
• Without integrated line filter	kg (lb)	1.8 (3.97)	3.4 (7.50)	5.8 (12.8)
• With integrated line filter	kg (lb)	2 (4.41)	3.7 (8.16)	6.3 (13.9)

[1] The rated output current I_{rated} is based on the duty cycle for low overload (LO).

[2] The base-load current I_H is based on the duty cycle for high overload (HO).

[3] Typical values. You can find additional information on the Internet at https://support.industry.siemens.com/cs/document/94059311

[4] The input current depends on the motor load and line impedance and applies for a line impedance corresponding to u_K = 1 %. The rated input currents apply for a load with the type rating (based on I_{rated}) – these current values are specified on the rating plate.

© Siemens AG 2017

Technical specifications (continued)

Line voltage 380 ... 480 V 3 AC		**PM240-2 Power Modules push-through variant**		
Without integrated line filter		6SL3211-1PE18-0UL1	6SL3211-1PE21-8UL0	6SL3211-1PE23-3UL0
With integrated line filter class A		6SL3211-1PE18-0AL1	6SL3211-1PE21-8AL0	6SL3211-1PE23-3AL0
Output current at 50 Hz 400 V 3 AC				
• Rated current I_{rated} [1]	A	7.7	18	32
• For S6 duty (40 %) I_{S6}	A	8.5	19.8	37.1
• Base-load current I_H [2]	A	5.9	13.2	26
• Maximum current I_{max}	A	11.8	27	52
Type rating				
• Based on I_{rated}	kW (hp)	3 (4)	7.5 (10)	15 (20)
• Based on I_H	kW (hp)	2.2 (7.5)	5.5 (7.5)	11 (15)
Rated pulse frequency	kHz	4	4	4
Efficiency η	%	>96	>97	>97
Power loss [3] at rated current	kW	0.113	0.239	0.385
Cooling air requirement	m^3/s (ft^3/s)	0.007 (0.2)	0.0092 (0.3)	0.0185 (0.7)
Sound pressure level L_{pA} (1 m)	dB	<56	<62	<65
24 V DC power supply for Control Unit	A	1	1	1
Input current [4]				
• Rated current	A	10.1	22.2	39.9
• Based on I_H	A	8.8	19.8	36
Line supply connection U1/L1, V1/L2, W1/L3		Screw terminals, plug-in	Screw terminals, plug-in	Screw terminals, plug-in
• Conductor cross-section	mm^2	1.5 ... 2.5	1.5 ... 6	6 ... 16
Motor connection U2, V2, W2		Screw terminals, plug-in	Screw terminals, plug-in	Screw terminals, plug-in
• Conductor cross-section	mm^2	1.5 ... 2.5	1.5 ... 6	6 ... 16
Motor cable length, max.				
• Without filter, shielded/unshielded	m (ft)	150/150 (492/492)	150/150 (492/492)	150/150 (492/492)
• With integrated filter class A, shielded/unshielded	m (ft)	50/100 (164/328)	100/100 (328/328) [5]	150/150 (492/492) [5]
Degree of protection		IP20	IP20	IP20
Dimensions				
• Width	mm (in)	126 (4.96)	154 (6.06)	200 (7.87)
• Height	mm (in)	238 (9.37)	345 (13.58)	411 (16.18)
• Depth without operator panel	mm (in)	171 (6.73)	171 (6.73)	171 (6.73)
Frame size		FSA	FSB	FSC
Weight, approx. With integrated line filter				
• Without integrated line filter	kg (lb)	1.7 (3.75)	3.6 (7.94)	5.8 (12.8)
• With integrated line filter	kg (lb)	1.8 (3.97)	3.9 (8.60)	6.3 (13.9)

[1] The rated output current I_{rated} is based on the duty cycle for low overload (LO).

[2] The base-load current I_H is based on the duty cycle for high overload (HO).

[3] Typical values. You can find additional information on the Internet at https://support.industry.siemens.com/cs/document/94059311

[4] The input current depends on the motor load and line impedance and applies for a line impedance corresponding to u_K = 1 %. The rated input currents apply for a load with the type rating (based on I_{rated}) – these current values are specified on the rating plate.

[5] The values are applicable for low capacitance cables, e.g. MOTION-CONNECT. For standard CY cables the max. permissible motor cable length is 50 m (164 ft) (shielded).

© Siemens AG 2017

Characteristic curves

Overload capability

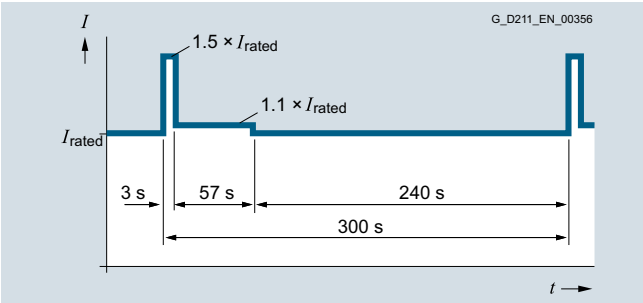

300 s duty cycle based on low overload

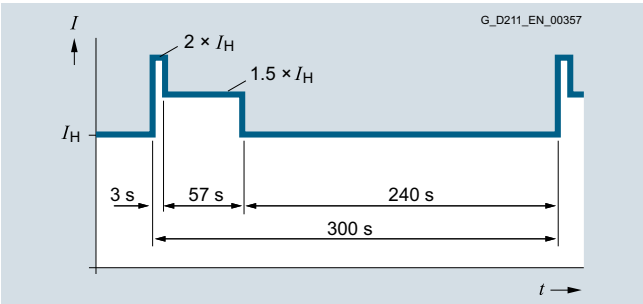

300 s duty cycle based on high overload

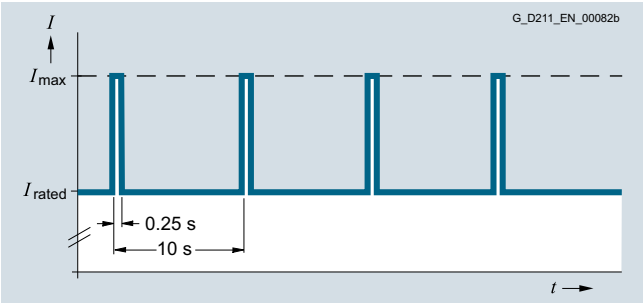

Duty cycle with previous load

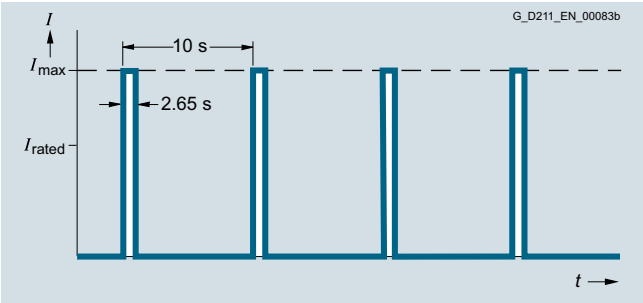

Duty cycle without previous load

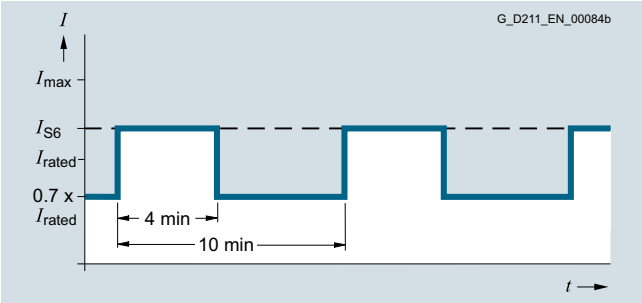

S6 duty cycle with previous load with a duty cycle duration of 600 s

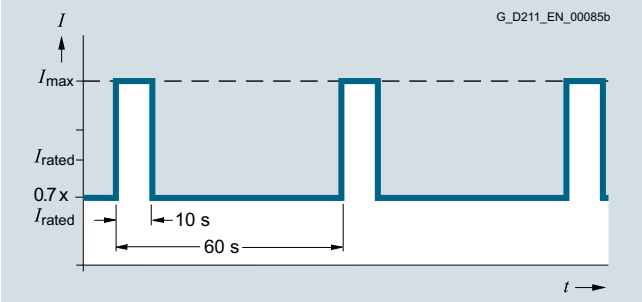

S6 duty cycle with previous load with a duty cycle duration of 60 s

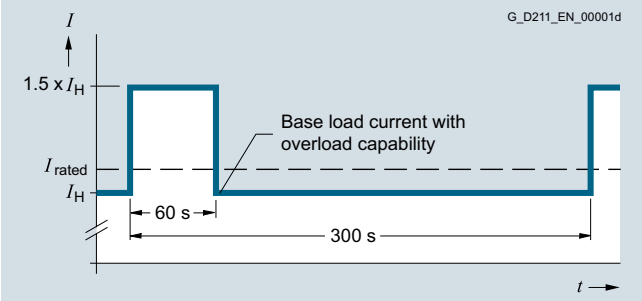

Duty cycle with 60 s overload with a duty cycle duration of 300 s

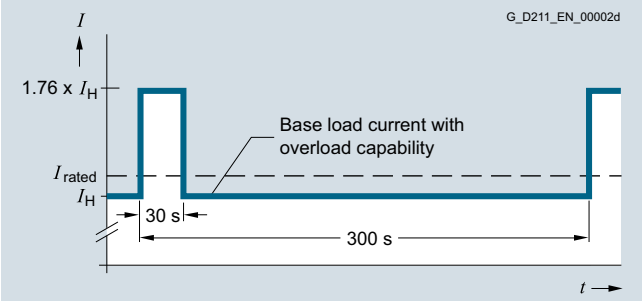

Duty cycle with 30 s overload with a duty cycle duration of 300 s

© Siemens AG 2017

Characteristic curves (continued)

Derating data

Pulse frequency

Type rating [1] at 50 Hz 200 V 1 AC/3 AC		**Rated output current in A** for a pulse frequency of						
kW	hp	4 kHz	6 kHz	8 kHz	10 kHz	12 kHz	14 kHz	16 kHz
0.55	0.75	3.2	2.6	2.1	1.8	1.5	1.4	1.2
0.75	1	4.2	3.3	2.7	2.3	2	1.8	1.6
1.1	1.5	6	4.7	3.9	3.3	2.8	2.5	2.2
1.5	2	7.4	6.3	5.2	4.4	3.7	3.3	3
2.2	3	10.4	8.8	7.3	6.2	5.2	4.7	4.2
3	4	13.6	11.6	9.5	8.2	6.8	6.1	5.4
4	5	17.5	14.9	12.3	10.5	8.8	7.9	7
5.5	7.5	22	18.7	15.4	13.2	11	9.9	8.8
7.5	10	28	23.8	19.6	16.8	14	12.6	11.2
11	15	42	35.7	29.4	25.2	21	18.9	16.8
15	20	54	45.9	37.8	32.4	27	24.3	21.6
18.5	25	68	57.8	47.6	40.8	34	30.6	27.2
22	30	80	68	56	48	40	36	32
30	40	104	88.4	72.8	62.4	52	46.8	41.6
37	50	130	110.5	91	–	–	–	–
45	60	154	130.9	107.8	–	–	–	–
55	75	178	151.3	124.6	–	–	–	–

Type rating [1] at 50 Hz 400 V 3 AC		**Rated output current in A** for a pulse frequency of							
kW	hp	2 kHz	4 kHz	6 kHz	8 kHz	10 kHz	12 kHz	14 kHz	16 kHz
0.55	0.75	1.7	1.7	1.45	1.19	1.02	0.85	0.77	0.68
0.75	1	2.2	2.2	1.87	1.54	1.32	1.1	0.99	0.88
1.1	1.5	3.1	3.1	2.64	2.17	1.86	1.55	1.4	1.24
1.5	2	4.1	4.1	3.49	2.87	2.46	2.05	1.85	1.64
2.2	3	5.9	5.9	5.02	4.13	3.54	2.95	2.66	2.36
3	4	7.7	7.7	6.55	5.39	4.62	3.85	3.47	3.08
4	5	10.2	10.2	8.7	7.1	6.1	5.1	4.6	4.1
5.5	7.5	13.2	13.2	11.2	9.2	7.9	6.6	5.9	5.3
7.5	10	18	18	15.3	12.6	10.8	9	8.1	7.2
11	15	26	26	22.1	18.2	15.6	13	11.7	10.4
15	20	32	32	27.2	22.4	19.2	16	14.4	12.8
18.5	25	38	38	32.3	26.6	22.8	19	17.1	15.2
22	30	45	45	38.3	31.5	27	22.5	20.3	18
30	40	60	60	51	42	36	30	27	24
37	50	75	75	63.8	52.5	45	37.5	33.8	30
45	60	90	90	76.5	63	54	45	40.5	36
55	75	110	110	93.5	77	66	55	49.5	44
75	100	145	145	123.25	108.75	–	–	–	–
90	125	178	178	151.3	133.5	–	–	–	–
110	150	205	143	–	–	–	–	–	–
132	200	250	175	–	–	–	–	–	–

[1] Type rating based on the rated output current I_{rated}. The rated output current I_{rated} is based on the duty cycle for low overload (LO).

© Siemens AG 2017

Characteristic curves (continued)

Derating data *(continued)*

Type rating [1] at 50 Hz 690 V 3 AC		**Rated output current in A** for a pulse frequency of							
kW	hp	2 kHz	4 kHz	6 kHz	8 kHz	10 kHz	12 kHz	14 kHz	16 kHz
11	10	14	8.4	–	–	–	–	–	–
15	15	19	11.4	–	–	–	–	–	–
18.5	20	23	13.8	–	–	–	–	–	–
22	25	27	16.2	–	–	–	–	–	–
30	30	35	21	–	–	–	–	–	–
37	40	42	25.2	–	–	–	–	–	–
45	50	52	31.2	–	–	–	–	–	–
55	60	62	37.2	–	–	–	–	–	–
75	75	80	48	–	–	–	–	–	–
90	100	100	60	–	–	–	–	–	–
110	100	115	69	–	–	–	–	–	–
132	125	142	85.2	–	–	–	–	–	–

[1] Type rating based on the rated output current I_{rated}. The rated output current I_{rated} is based on the duty cycle for low overload (LO).

© Siemens AG 2017

Characteristic curves (continued)

Derating data *(continued)*

Ambient temperature

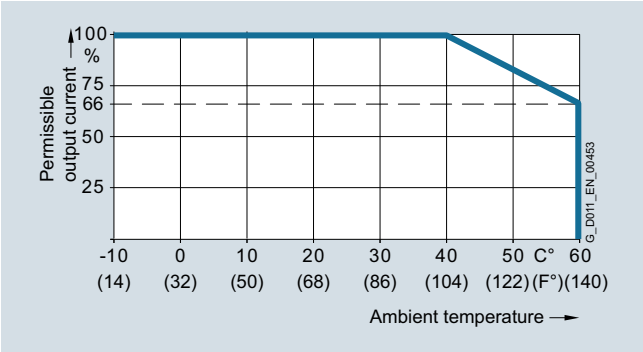

Permissible output current as a function of ambient temperature for low overload (LO) for PM240-2 Power Modules, frame sizes FSA to FSC

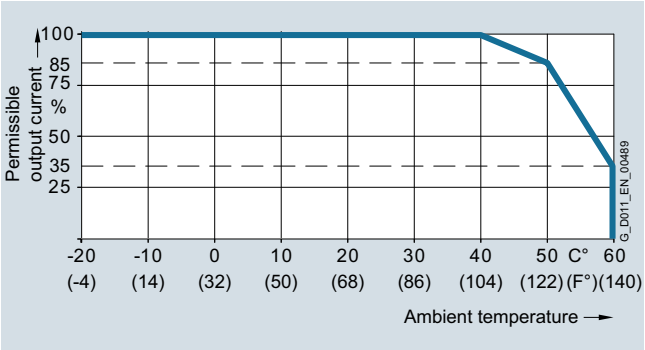

Permissible output current as a function of ambient temperature for low overload (LO) for PM240-2 Power Modules, frame sizes FSD to FSF

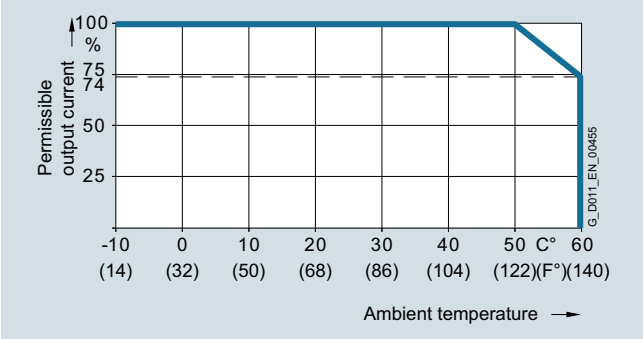

Permissible output current as a function of ambient temperature for high overload (HO) for PM240-2 Power Modules, frame sizes FSA to FSC

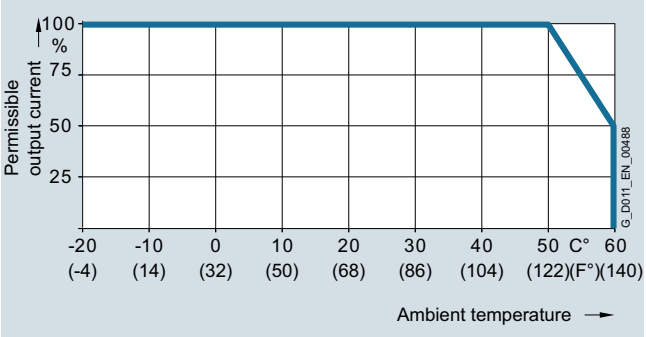

Permissible output current as a function of ambient temperature for high overload (HO) for PM240-2 Power Modules, frame sizes FSD to FSF

Note:

The operating temperature ranges of the Control Units should be taken into account.

Installation altitude

Permissible line supplies depending on the installation altitude

- Installation altitude up to 2000 m (6562 ft) above sea level
  - Connection to every supply system permitted for the inverter
- Installation altitudes between 2000 m and 4000 m (6562 ft and 13124 ft) above sea level
  - Connection to a TN system with grounded neutral point
  - TN systems with grounded line conductor are not permitted
  - The TN line system with grounded neutral point can also be supplied using an isolation transformer
  - The phase-to-phase voltage does not have to be reduced

Note:

The connected motors, power elements and components must be considered separately.

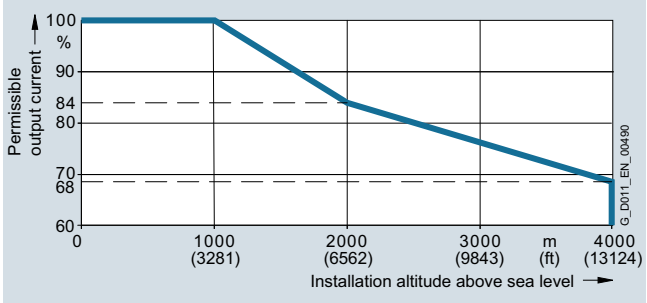

Permissible output current as a function of the installation altitude for PM240-2 Power Modules

System operating voltage

The rated output current remains constant over the 380 V to 480 V 3 AC voltage range.

© Siemens AG 2017

Overview

Line filters for PM240-2 Power Modules

With one of the additional line filters, the Power Module attains a higher radio interference class.

Integration

Line filters that are optionally available depending on the Power Module used

	Frame size					
	FSA	**FSB**	**FSC**	**FSD**	**FSE**	**FSF**
PM240-2 Power Module with integrated braking chopper						
Available frame sizes						
• 200 V versions	✓	✓	✓	✓ [2]	✓ [2]	✓ [2]
• 400 V versions	✓	✓	✓	✓	✓	✓
• 690 V versions	–	–	–	✓	✓	✓
Line-side power components						
Line filter class A according to EN 55011	I	I	I	I [2]	I [2]	I [2]
Line filter class B acc. to EN 5501 (only for 400 V versions)	U [1]	U [1]	U [1]	–	–	–

U = Base component
I = Integrated
– = Not possible

Selection and ordering data

Type rating		PM240-2 Power Module standard variant		**Line filter class B according to EN 55011**
kW	hp	Type 6SL3210-...	Frame size	Article No.
380 ... 480 V 3 AC				
0.55	0.75	1PE11-8UL1	FSA	**6SL3203-0BE17-7BA0**
0.75	1	1PE12-3UL1		
1.1	1.5	1PE13-2UL1		
1.5	2	1PE14-3UL1		
2.2	3	1PE16-1UL1		
3	4	1PE18-0UL1		
4	5	1PE21-1UL0	FSB	**6SL3203-0BE21-8BA0**
5.5	7.5	1PE21-4UL0		
7.5	10	1PE21-8UL0		
11	15	1PE22-7UL0	FSC	**6SL3203-0BE23-8BA0**
15	20	1PE23-3UL0		

[1] Lateral mounting is the only possible option for push-through variants.

[2] PM240-2 200 V versions, frame sizes FSD to FSF are only available without integrated line filter.

© Siemens AG 2017

Selection and ordering data (continued)

Type rating		PM240-2 Power Module push-through variant		**Line filter class B according to EN 55011**
kW	hp	Type 6SL3211-...	Frame size	Article No.
380 ... 480 V 3 AC				
3	4	1PE18-0UL1	FSA	**6SL3203-0BE17-7BA0**
7.5	10	1PE21-8UL0	FSB	**6SL3203-0BE21-8BA0**
15	20	1PE23-3UL0	FSC	**6SL3203-0BE23-8BA0**

Technical specifications

Line voltage 380 ... 480 V 3 AC		**Line filter class B**		
		6SL3203-0BE17-7BA0	6SL3203-0BE21-8BA0	6SL3203-0BE23-8BA0
Rated current	A	11.4	23.5	49.4
Pulse frequency	kHz	4 ... 16	4 ... 16	4 ... 16
Line supply connection L1, L2, L3		Screw terminals	Screw terminals	Screw terminals
• Conductor cross-section	mm^2	1 ... 2.5	2.5 ... 6	6 ... 16
Load connection U, V, W		Shielded cable	Shielded cable	Shielded cable
• Cable cross-section	mm^2	1.5	4	10
• Length	m (ft)	0.45 (1.48)	0.5 (1.64)	0.54 (1.77)
PE connection		On housing via M5 screw stud	On housing via M5 screw stud	On housing via M6 screw studs
• Conductor cross-section	mm^2	1 ... 2.5	2.5 ... 6	6 ... 16
Degree of protection		IP20	IP20	IP20
Dimensions				
• Width	mm (in)	73 (2.87)	100 (3.94)	140 (5.51)
• Height	mm (in)	202 (7.95)	297 (11.69)	359 (14.13)
• Depth	mm (in)	65 (2.56)	85 (3.35)	95 (3.74)
Possible as base component		Yes	Yes	Yes
Weight, approx.	kg (lb)	1.75 (3.86)	4 (8.82)	7.3 (16.1)
Suitable for PM240-2 Power Module Standard variant 380 ... 480 V 3 AC	Type	6SL3210-1PE11-8UL1 6SL3210-1PE12-3UL1 6SL3210-1PE13-2UL1 6SL3210-1PE14-3UL1 6SL3210-1PE16-1UL1 6SL3210-1PE18-0UL1	6SL3210-1PE21-1UL0 6SL3210-1PE21-4UL0 6SL3210-1PE21-8UL0	6SL3210-1PE22-7UL0 6SL3210-1PE23-3UL0
Suitable for PM240-2 Power Module Push-through variant 380 ... 480 V 3 AC (lateral mounting only)	Type	6SL3211-1PE18-0UL1	6SL3211-1PE21-8UL0	6SL3211-1PE23-3UL0
• Frame size		FSA	FSB	FSC

7

© Siemens AG 2017

Overview

Line reactor for PM240-2 Power Modules, frame size FSA

Line reactors smooth the current drawn by the inverter and thus reduce harmonic components in the line current. Through the reduction of the current harmonics, the thermal load on the power components in the rectifier and in the DC-link capacitors is reduced as well as the harmonic effects on the supply. The use of a line reactor increases the service life of the inverter.

Integration

A DC link reactor is integrated in the PM240-2 Power Modules FSD to FSF and therefore no line reactor is required.

Line reactors that are optionally available depending on the Power Module used

	Frame size					
	FSA	**FSB**	**FSC**	**FSD**	**FSE**	**FSF**
PM240-2 Power Module with integrated braking chopper						
Available frame sizes						
• 200 V versions	✓	✓	✓	✓	✓	✓
• 400 V versions	✓	✓	✓	✓	✓	✓
• 690 V versions	–	–	–	✓	✓	✓
Line-side power components						
Line reactors (only for 3 AC versions)	S	S	S	I	I	I

S = Lateral mounting
I = Integrated
– = Not possible

© Siemens AG 2017

Selection and ordering data

Type rating		PM240-2 Power Module standard variant		**Line reactor**
kW	hp	Type 6SL3210-...	Frame size	Article No.
200 ... 240 V 3 AC				
0.55	0.75	1PB13-0 . L0	FSA	**6SL3203-0CE13-2AA0**
0.75	1	1PB13-8 . L0		
1.1	1.5	1PB15-5 . L0	FSB	**6SL3203-0CE21-0AA0**
1.5	2	1PB17-4 . L0		
2.2	3	1PB21-0 . L0		
3	4	1PB21-4 . L0	FSC	**6SL3203-0CE21-8AA0**
4	5	1PB21-8 . L0		
5.5	7.5	1PC22-2 . L0	FSC	**6SL3203-0CE23-8AA0**
7.5	10	1PC22-8 . L0		
380 ... 480 V 3 AC				
0.55	0.75	1PE11-8 . L1	FSA	**6SL3203-0CE13-2AA0**
0.75	1	1PE12-3 . L1		
1.1	1.5	1PE13-2 . L1		
1.5	2	1PE14-3 . L1	FSA	**6SL3203-0CE21-0AA0**
2.2	3	1PE16-1 . L1		
3	4	1PE18-0 . L1		
4	5	1PE21-1 . L0	FSB	**6SL3203-0CE21-8AA0**
5.5	7.5	1PE21-4 . L0		
7.5	10	1PE21-8 . L0		
11	15	1PE22-7 . L0	FSC	**6SL3203-0CE23-8AA0**
15	20	1PE23-3 . L0		

Type rating		PM240-2 Power Module push-through variant		**Line reactor**
kW	hp	Type 6SL3211-...	Frame size	Article No.
200 ... 240 V 3 AC				
0.75	1	1PB13-8 . L0	FSA	**6SL3203-0CE13-2AA0**
2.2	3	1PB21-0 . L0	FSB	**6SL3203-0CE21-0AA0**
4	5	1PB21-8 . L0	FSC	**6SL3203-0CE21-8AA0**
380 ... 480 V 3 AC				
3	4	1PE18-0 . L1	FSA	**6SL3203-0CE21-0AA0**
7.5	10	1PE21-8 . L0	FSB	**6SL3203-0CE21-8AA0**
15	20	1PE23-3 . L0	FSC	**6SL3203-0CE23-8AA0**

© Siemens AG 2017

Technical specifications

Line voltage 200 ... 240 V 3 AC or 380 ... 480 V 3 AC		**Line reactor**			
		6SL3203-0CE13-2AA0	6SL3203-0CE21-0AA0	6SL3203-0CE21-8AA0	6SL3203-0CE23-8AA0
Rated current	A	4	11.3	22.3	47
Power loss at 50/60 Hz	W	23/26	36/40	53/59	88/97
Line supply/load connection 1L1, 1L2, 1L3 2L1, 2L2, 2L3		Screw terminals	Screw terminals	Screw terminals	Screw terminals
• Conductor cross-section	mm^2	4	4	10	16
PE connection		M4 × 8; U washer; spring lock washer	M4 × 8; U washer; spring lock washer	M5 × 10; U washer; spring lock washer	M5 × 10; U washer; spring lock washer
Degree of protection		IP20	IP20	IP20	IP20
Dimensions					
• Width	mm (in)	125 (4.92)	125 (4.92)	125 (4.92)	190 (7.48)
• Height	mm (in)	120 (4.72)	140 (5.51)	145 (5.71)	220 (8.66)
• Depth	mm (in)	71 (2.8)	71 (2.8)	91 (3.58)	91 (3.58)
Weight, approx.	kg (lb)	1.1 (2.43)	2.1 (4.63)	2.95 (6.5)	7.8 (17.2)
Suitable for PM240-2 Power Module standard variant 200 ... 240 V 3 AC	Type	6SL3210-1PB13-0 . L0 6SL3210-1PB13-8 . L0	6SL3210-1PB15-5 . L0 6SL3210-1PB17-4 . L0 6SL3210-1PB21-0 . L0	6SL3210-1PB21-4 . L0 6SL3210-1PB21-8 . L0	6SL3210-1PC22-2 . L0 6SL3210-1PC22-8 . L0
• Frame size		FSA	FSB	FSC	FSC
Suitable for PM240-2 Power Module standard variant 380 ... 480 V 3 AC	Type	6SL3210-1PE11-8 . L1 6SL3210-1PE12-3 . L1 6SL3210-1PE13-2 . L1	6SL3210-1PE14-3 . L1 6SL3210-1PE16-1 . L1 6SL3210-1PE18-0 . L1	6SL3210-1PE21-1 . L0 6SL3210-1PE21-4 . L0 6SL3210-1PE21-8 . L0	6SL3210-1PE22-7 . L0 6SL3210-1PE23-3 . L0
• Frame size		FSA	FSA	FSB	FSC
Suitable for PM240-2 Power Module push-through variant 200 ... 240 V 3 AC	Type	6SL3211-1PB13-8 . L0	6SL3211-1PB21-0 . L0	6SL3211-1PB21-8 . L0	–
• Frame size		FSA	FSB	FSC	–
Suitable for PM240-2 Power Module push-through variant 380 ... 480 V 3 AC	Type	–	6SL3211-1PE18-0 . L1	6SL3211-1PE21-8 . L0	6SL3211-1PE23-3 . L0
• Frame size		–	FSA	FSB	FSC

© Siemens AG 2017

Selection and ordering data

The following tables list recommendations for additional line-side components, such as fuses and circuit breakers. The values in the table take into account the overload capability of the inverter.

Notes for use in compliance with IEC standards:

3NA3 or 3NE1 fuses and 3RV motor starter protectors or 3VL circuit breakers are recommended for European countries.

Notes for use in compliance with UL regulations:

UL-listed fuses Class J, T, CC, G or CF (with rated voltage 250 V AC or 600 V AC) or 3NE1 (UL-compliant – corresponds to RU) are required for North America.

Short Circuit Current Rating (SCCR)
according to UL
Applies to industrial control panel installations to NEC Article 409 or UL 508A/508C

- PM240-2: 100 kA (200 V versions), 100 kA (400 V versions), 65 kA (690 V versions)
  (the value depends on the fuses and circuit breakers used)

Notes regarding installations in Canada:

Overvoltage protection devices in accordance with overvoltage category III and with the following ratings must be connected on the line side of the inverter:

- Rated voltage 480 V (phase-phase) and 480 V (phase-ground)
- Voltage limit 4 kV (phase-phase) and 6 kV (phase-ground)

All overvoltage protection devices used must comply with Canadian standards for industrial installations.

Further information, particularly regarding use in accordance with UL guidelines, is available at
https://support.industry.siemens.com/cs/document/109479152
https://support.industry.siemens.com/cs/document/109486009

Additional information about the line-side power components can be found in Catalogs LV 10, IC 10 and IC 10 AO as well as the Industry Mall.

Type rating [1]		PM240-2 Power Module standard variant		IEC-compliant			UL/cUL-compliant	
				Fuse		Circuit breaker	Fuse type Rated voltage 250 V AC or 600 V AC	
		Type		Current				Current
kW	hp	6SL3210-...	Frame size	A	Article No.	Article No.	Class	A
200 ... 240 V 1 AC/3 AC								
0.55	0.75	1PB13-0 . L0	FSA	16	**3NA3805**	**3RV2011-4AA10**	J, T, CC, G, CF	15
0.75	1	1PB13-8 . L0	FSA	16	**3NA3805**	**3RV2011-4AA10**	J, T, CC, G, CF	15
1.1	1.5	1PB15-5 . L0	FSB	32	**3NA3812**	**3RV2021-4EA10**	J, T, CC, G, CF	35
1.5	2	1PB17-4 . L0	FSB	32	**3NA3812**	**3RV2021-4EA10**	J, T, CC, G, CF	35
2.2	3	1PB21-0 . L0	FSB	32	**3NA3812**	**3RV2021-4EA10**	J, T, CC, G, CF	35
3	4	1PB21-4 . L0	FSC	50	**3NA3820**	**3RV1031-4HA10**	J, T, CC, G, CF	50
4	5	1PB21-8 . L0	FSC	50	**3NA3820**	**3RV1031-4HA10**	J, T, CC, G, CF	50
200 ... 240 V 3 AC								
5.5	7.5	1PC22-2 . L0	FSC	50	**3NA3820**	**3RV1031-4HA10**	J, T, CC, G, CF	50
7.5	10	1PC22-8 . L0	FSC	50	**3NA3820**	**3RV1031-4HA10**	J, T, CC, G, CF	50
11	15	1PC24-2UL0	FSD	63	**3NE1818-0**	**3RV1041-4JA10**	J	60
15	20	1PC25-4UL0	FSD	80	**3NE1820-0**	**3RV1041-4KA10**	J	70
18.5	25	1PC26-8UL0	FSD	100	**3NE1021-0**	**3RV1041-4LA10**	J	90
22	30	1PC28-0UL0	FSE	100	**3NE1021-0**	**3VL1712-2DD33-....** [*]	J	100
30	40	1PC31-1UL0	FSE	160	**3NE1224-0**	**3VL1716-2DD33-....** [*]	J	150
37	50	1PC31-3UL0	FSF	200	**3NE1225-0**	**3VL3720-3DC33-....** [*]	J	175
45	60	1PC31-6UL0	FSF	200	**3NE1225-0**	**3VL3720-3DC33-....** [*]	J	200
55	75	1PC31-8UL0	FSF	250	**3NE1227-0**	**3VL3725-3DC33-....** [*]	J	225
380 ... 480 V 3 AC								
0.55	0.75	1PE11-8 . L1	FSA	16	**3NA3805**	**3RV2011-4AA10**	J, T, CC, G, CF	10
0.75	1	1PE12-3 . L1	FSA	16	**3NA3805**	**3RV2011-4AA10**	J, T, CC, G, CF	10
1.1	1.5	1PE13-2 . L1	FSA	16	**3NA3805**	**3RV2011-4AA10**	J, T, CC, G, CF	15
1.5	2	1PE14-3 . L1	FSA	16	**3NA3805**	**3RV2011-4AA10**	J, T, CC, G, CF	20
2.2	3	1PE16-1 . L1	FSA	16	**3NA3805**	**3RV2011-4AA10**	J, T, CC, G, CF	30
3	4	1PE18-0 . L1	FSA	16	**3NA3805**	**3RV2011-4AA10**	J, T, CC, G, CF	30
4	5	1PE21-1 . L0	FSB	32	**3NA3812**	**3RV2021-4EA10**	J, T, CC, G, CF	35
5.5	7.5	1PE21-4 . L0	FSB	32	**3NA3812**	**3RV2021-4EA10**	J, T, CC, G, CF	35
7.5	10	1PE21-8 . L0	FSB	32	**3NA3812**	**3RV2021-4EA10**	J, T, CC, G, CF	35
11	15	1PE22-7 . L0	FSC	50	**3NA3820**	**3RV1031-4HA10**	J, T, CC, G, CF	50

[1] Type rating based on the rated output current I_{rated}. The rated output current I_{rated} is based on the duty cycle for low overload (LO).

[*] See Catalog LV 10 for Article No. supplements.

© Siemens AG 2017

Selection and ordering data (continued)

Type rating [1]		PM240-2 Power Module standard variant		IEC-compliant			UL/cUL-compliant	
				Fuse		**Circuit breaker**	**Fuse type** Rated voltage 250 V AC or 600 V AC	
		Type		Current				Current
kW	hp	6SL3210-...	Frame size	A	Article No.	Article No.	Class	A
380 ... 480 V 3 AC (continued)								
15	20	1PE23-3 . L0	FSC	50	**3NA3820**	**3RV1031-4HA10**	J, T, CC, G, CF	50
18.5	25	1PE23-8 . L0	FSD	63	**3NE1818-0**	**3RV1041-4JA10**	J	60
22	30	1PE24-5 . L0	FSD	80	**3NE1820-0**	**3RV1041-4KA10**	J	70
30	40	1PE26-0 . L0	FSD	100	**3NE1021-0**	**3RV1041-4LA10**	J	90
37	50	1PE27-5 . L0	FSD	100	**3NE1021-0**	**3RV1041-4MA10**	J	100
45	60	1PE28-8 . L0	FSE	125	**3NE1022-0**	**3VL1712-2DD33-....** [*]	J	125
55	75	1PE31-1 . L0	FSE	160	**3NE1224-0**	**3VL1716-2DD33-....** [*]	J	150
75	100	1PE31-5 . L0	FSF	200	**3NE1225-0**	**3VL3720-3DC33-....** [*]	J	200
90	125	1PE31-8 . L0	FSF	250	**3NE1227-0**	**3VL3725-3DC33-....** [*]	J	225
110	150	1PE32-1 . L0	FSF	315	**3NE1230-0**	**3VL4731-3DC36-....** [*]	J	300
132	200	1PE32-5 . L0	FSF	350	**3NE1331-0**	**3VL4740-3DC36-....** [*]	J	350
500 ... 690 V 3 AC								
11	10	1PH21-4 . L0	FSD	25	**3NE1815-0**	**3RV1042-4BA10**	J	20
15	15	1PH22-0 . L0	FSD	25	**3NE1815-0**	**3RV1042-4EA10**	J	25
18.5	20	1PH22-3 . L0	FSD	35	**3NE1803-0**	**3RV1042-4EA10**	J	30
22	25	1PH22-7 . L0	FSD	35	**3NE1803-0**	**3VL1704-2DD33-....** [*]	J	35
30	30	1PH23-5 . L0	FSD	50	**3NE1817-0**	**3VL1705-2DD33-....** [*]	J	45
37	40	1PH24-2 . L0	FSD	63	**3NE1818-0**	**3VL1706-2DD33-....** [*]	J	60
45	50	1PH25-2 . L0	FSE	80	**3NE1820-0**	**3VL1708-2DD33-....** [*]	J	80
55	60	1PH26-2 . L0	FSE	80	**3NE1820-0**	**3VL1710-2DD33-....** [*]	J	80
75	75	1PH28-0 . L0	FSF	100	**3NE1021-0**	**3VL1712-2DD33-....** [*]	J	100
90	100	1PH31-0 . L0	FSF	125	**3NE1022-0**	**3VL1712-2DD33-....** [*]	J	125
110	100	1PH31-2 . L0	FSF	160	**3NE1224-0**	**3VL1716-2DD33-....** [*]	J	150
132	125	1PH31-4 . L0	FSF	200	**3NE1225-0**	**3VL3720-3DC33-....** [*]	J	200

Type rating [1]		PM240-2 Power Module push-through variant		IEC-compliant			UL/cUL-compliant	
				Fuse		**Circuit breaker**	**Fuse type** Rated voltage 250 V AC or 600 V AC	
		Type		Current				Current
kW	hp	6SL3211-...	Frame size	A	Article No.	Article No.	Class	A
200 ... 240 V 1 AC/3 AC								
0.75	1	1PB13-8 . L0	FSA	16	**3NA3805**	**3RV2011-4AA10**	J, T, CC, G, CF	15
2.2	3	1PB21-0 . L0	FSB	32	**3NA3812**	**3RV2021-4EA10**	J, T, CC, G, CF	35
4	5	1PB21-8 . L0	FSC	50	**3NA3820**	**3RV1031-4HA10**	J, T, CC, G, CF	50
380 ... 480 V 3 AC								
3	4	1PE18-0 . L1	FSA	16	**3NA3805**	**3RV2011-4AA10**	J, T, CC, G, CF	30
7.5	10	1PE21-8 . L0	FSB	32	**3NA3812**	**3RV2021-4EA10**	J, T, CC, G, CF	35
15	20	1PE23-3 . L0	FSC	50	**3NA3820**	**3RV1031-4HA10**	J, T, CC, G, CF	50

[1] Type rating based on the rated output current I_{rated}. The rated output current I_{rated} is based on the duty cycle for low overload (LO).

[*] See Catalog LV 10 for Article No. supplements.

© Siemens AG 2017

Overview

Braking resistor for PM240-2 Power Modules, frame size FSD

Excess energy in the DC link is dissipated in the braking resistor. The braking resistors are intended for use with PM240-2 Power Modules which feature an integrated braking chopper, but cannot regenerate energy to the supply system. For regenerative operation, e.g. the braking of a rotating mass with high moment of inertia, a braking resistor must be connected to convert the resulting energy into heat.

The braking resistors can be installed laterally next to the PM240-2 Power Modules. The braking resistors for the Power Modules, frame sizes FSD to FSF, should be placed outside the control cabinet or outside the switchgear room so that the heat is dissipated away from the Power Modules. The level of air conditioning required is therefore reduced.

Every braking resistor has a temperature switch (UL-listed). The temperature switch should be evaluated to prevent consequential damage if the braking resistor overheats.

Integration

Braking resistors that are optionally available depending on the Power Module used

	Frame size					
	FSA	**FSB**	**FSC**	**FSD**	**FSE**	**FSF**
PM240-2 Power Module with integrated braking chopper						
Available frame sizes						
• 200 V versions	✓	✓	✓	✓	✓	✓
• 400 V versions	✓	✓	✓	✓	✓	✓
• 690 V versions	–	–	–	✓	✓	✓
DC link components						
Braking resistor	S	S	S	S	S	S

S = Lateral mounting
– = Not possible

© Siemens AG 2017

Selection and ordering data

Type rating		PM240-2 Power Module standard variant		**Braking resistor**
kW	hp	Type 6SL3210-...	Frame size	Article No.
200 ... 240 V 1 AC/3 AC				
0.55	0.75	1PB13-0 . L0	FSA	**JJY:023146720008**
0.75	1	1PB13-8 . L0		
1.1	1.5	1PB15-5 . L0	FSB	**JJY:023151720007**
1.5	2	1PB17-4 . L0		
2.2	3	1PB21-0 . L0		
3	4	1PB21-4 . L0	FSC	**JJY:023163720018**
4	5	1PB21-8 . L0		
200 ... 240 V 3 AC				
5.5	7.5	1PC22-2 . L0	FSC	**JJY:023433720001**
7.5	10	1PC22-8 . L0		
11	15	1PC24-2UL0	FSD	**JJY:023422620002**
15	20	1PC25-4UL0		
18.5	25	1PC26-8UL0		
22	30	1PC28-0UL0	FSE	**JJY:023423320001**
30	40	1PC31-1UL0		
37	50	1PC31-3UL0	FSF	**JJY:023434020003**
45	60	1PC31-6UL0		
55	75	1PC31-8UL0		
380 ... 480 V 3 AC				
0.55	0.75	1PE11-8 . L1	FSA	**6SL3201-0BE14-3AA0**
0.75	1	1PE12-3 . L1		
1.1	1.5	1PE13-2 . L1		
1.5	2	1PE14-3 . L1		
2.2	3	1PE16-1 . L1	FSA	**6SL3201-0BE21-0AA0**
3	4	1PE18-0 . L1		
4	5	1PE21-1 . L0	FSB	**6SL3201-0BE21-8AA0**
5.5	7.5	1PE21-4 . L0		
7.5	10	1PE21-8 . L0		
11	15	1PE22-7 . L0	FSC	**6SL3201-0BE23-8AA0**
15	20	1PE23-3 . L0		
18.5	25	1PE23-8 . L0	FSD	**JJY:023422620001**
22	30	1PE24-5 . L0		
30	40	1PE26-0 . L0	FSD	**JJY:023424020001**
37	50	1PE27-5 . L0		
45	60	1PE28-8 . L0	FSE	**JJY:023434020001**
55	75	1PE31-1 . L0		
75	100	1PE31-5 . L0	FSF	**JJY:023454020001**
90	125	1PE31-8 . L0		
110	150	1PE32-1 . L0	FSF	**JJY:023464020001**
132	200	1PE32-5 . L0		

© Siemens AG 2017

Selection and ordering data (continued)

Type rating		PM240-2 Power Module standard variant		**Braking resistor**
kW	hp	Type 6SL3210-...	Frame size	Article No.
500 ... 690 V 3 AC				
11	10	1PH21-4 . L0	FSD	**JJY:023424020002**
15	15	1PH22-0 . L0		
18.5	20	1PH22-3 . L0		
22	25	1PH22-7 . L0		
30	30	1PH23-5 . L0		
37	40	1PH24-2 . L0		
45	50	1PH25-2 . L0	FSE	**JJY:023434020002**
55	60	1PH26-2 . L0		
75	75	1PH28-0 . L0	FSF	**JJY:023464020002**
90	100	1PH31-0 . L0		
110	100	1PH31-2 . L0		
132	125	1PH31-4 . L0		

Type rating		PM240-2 Power Module push-through variant		**Braking resistor**
kW	hp	Type 6SL3211-...	Frame size	Article No.
200 ... 240 V 1 AC/3 AC				
0.75	1	1PB13-8 . L0	FSA	**JJY:023146720008**
2.2	3	1PB21-0 . L0	FSB	**JJY:023151720007**
4	5	1PB21-8 . L0	FSC	**JJY:023163720018**

Type rating		PM240-2 Power Module push-through variant		**Braking resistor**
kW	hp	Type 6SL3211-...	Frame size	Article No.
380 ... 480 V 3 AC				
3	4	1PE18-0 . L1	FSA	**6SL3201-0BE21-0AA0**
7.5	10	1PE21-8 . L0	FSB	**6SL3201-0BE21-8AA0**
15	20	1PE23-3 . L0	FSC	**6SL3201-0BE23-8AA0**

© Siemens AG 2017

Technical specifications

Line voltage 200 V … 240 V 1 AC/3 AC		**Braking resistor**		
		JJY:023146720008	JJY:023151720007	JJY:023163720018
Resistance	Ω	200	68	37
Rated power P_{DB} (continuous braking power)	kW	0.0375	0.11	0.2
Peak power P_{max} (load duration t_a = 12 s with period t = 240 s)	kW	0.75	2.2	4
Power connections		Cable	Cable	Cable
Thermostatic switch		Integrated	Integrated	Integrated
Degree of protection		IP20	IP20	IP20
Dimensions				
• Width	mm (in)	167 (6.57)	217 (8.54)	337 (13.27)
• Height	mm (in)	60 (2.36)	60 (2.36)	60 (2.36)
• Depth	mm (in)	30 (1.18)	30 (1.18)	30 (1.18)
Weight, approx.	kg (lb)	0.5 (1.10)	0.7 (1.54)	1.1 (2.43)
Suitable for PM240-2 Power Module standard variant	Type	6SL3210-1PB13-0 . L0 6SL3210-1PB13-8 . L0	6SL3210-1PB15-5 . L0 6SL3210-1PB17-4 . L0 6SL3210-1PB21-0 . L0	6SL3210-1PB21-4 . L0 6SL3210-1PB21-8 . L0
Suitable for PM240-2 Power Module push-through variant	Type	6SL3211-1PB13-8 . L0	6SL3211-1PB21-0 . L0	6SL3211-1PB21-8 . L0
• Frame size		FSA	FSB	FSC

Line voltage 200 V … 240 V 3 AC		**Braking resistor**			
		JJY:023433720001	JJY:023422620002	JJY:023423320001	JJY:023434020003
Resistance	Ω	20	7.5	4.5	2.5
Rated power P_{DB} (continuous braking power)	kW	0.0375	0.93	1.5	2.75
Peak power P_{max} (load duration t_a = 12 s with period t = 240 s)	kW	7.5	18.5	30	55
Power connections		Cable	Cable	Cable	Cable
Thermostatic switch		Integrated	Integrated	Integrated	Integrated
Degree of protection		IP20	IP21	IP21	IP21
Dimensions					
• Width	mm (in)	337 (13.27)	470 (18.5)	560 (22.5)	630 (24.8)
• Height	mm (in)	120 (4,72)	220 (8.66)	220 (8.66)	350 (13.78)
• Depth	mm (in)	30 (1.18)	180 (7.09)	180 (7.09)	180 (7.09)
Weight, approx.	kg (lb)	2 (4.41)	7 (15.4)	8.5 (18.7)	13.5 (29.8)
Suitable for Power Module PM240-2	Type	6SL3210-1PC22-2 . L0 6SL3210-1PC22-8 . L0	6SL3210-1PC24-2UL0 6SL3210-1PC25-4UL0 6SL3210-1PC26-8UL0	6SL3210-1PC28-0UL0 6SL3210-1PC31-1UL0	6SL3210-1PC31-3UL0 6SL3210-1PC31-6UL0 6SL3210-1PC31-8UL0
• Frame size		FSC	FSD	FSE	FSF

© Siemens AG 2017

Technical specifications (continued)

Line voltage 380 ... 480 V 3 AC		Braking resistor			
		6SL3201-0BE14-3AA0	6SL3201-0BE21-0AA0	6SL3201-0BE21-8AA0	6SL3201-0BE23-8AA0
Resistance	Ω	370	140	75	30
Rated power P_{DB} (continuous braking power)	kW	0.075	0.2	0.375	0.925
Peak power P_{max} (load duration t_a = 12 s with period t = 240 s)	kW	1.5	4	7.5	18.5
Power connection		Terminal block	Terminal block	Terminal block	Terminal block
• Conductor cross-section	mm^2	2.5	2.5	4	6 (0.24)
Thermostatic switch		NC contact	NC contact	NC contact	NC contact
• Contact load, max.		250 V AC/2.5 A	250 V AC/2.5 A	250 V AC/2.5 A	250 V AC/2.5 A
• Conductor cross-section	mm^2	2.5	2.5	2.5	2.5
PE connection					
• Via terminal block		Yes	Yes	Yes	Yes
• PE connection on housing		M4 screw	M4 screw	M4 screw	M4 screw
Degree of protection		IP20	IP20	IP20	IP20
Dimensions					
• Width	mm (in)	105 (4.13)	105 (4.13)	175 (6.89)	250 (9.84)
• Height	mm (in)	295 (11.61)	345 (13.58)	345 (13.58)	490 (19.29)
• Depth	mm (in)	100 (3.94)	100 (3.94)	100 (3.94)	140 (5.51)
Weight, approx.	kg (lb)	1.5 (3.31)	1.8 (3.97)	2.7 (5.95)	6.2 (13.7)
Suitable for PM240-2 Power Module standard variant 380 ... 480 V 3 AC	Type	6SL3210-1PE11-8 . L1 6SL3210-1PE12-3 . L1 6SL3210-1PE13-2 . L1 6SL3210-1PE14-3 . L1	6SL3210-1PE16-1 . L1 6SL3210-1PE18-0 . L1	6SL3210-1PE21-1 . L0 6SL3210-1PE21-4 . L0 6SL3210-1PE21-8 . L0	6SL3210-1PE22-7 . L0 6SL3210-1PE23-3 . L0
Suitable for PM240-2 Power Module push-through variant 380 ... 480 V 3 AC	Type	–	6SL3211-1PE18-0 . L1	6SL3211-1PE21-8 . L0	6SL3211-1PE23-3 . L0
• Frame size		FSA	FSA	FSB	FSC

Line voltage 380 ... 480 V 3 AC		Braking resistor				
		JJY:023422620001	JJY:023424020001	JJY:023434020001	JJY:023454020001 [1]	JJY:023464020001 [2]
Resistance	Ω	25	15	10	7.1	5
Rated power P_{DB} (continuous braking power)	kW	1.1	1.85	2.75	3.85	5.5
Peak power P_{max} (load duration t_a = 12 s with period t = 240 s)	kW	22	37	55	77	110
Power connection		Cable	Cable	Cable	Cable	Cable
Thermostatic switch		Integrated	Integrated	Integrated	Integrated	Integrated
Degree of protection		IP21	IP21	IP21	IP21	IP21
Dimensions						
• Width	mm (in)	470 (18.5)	610 (24.0)	630 (24.8)	[1]	[2]
• Height	mm (in)	220 (8.66)	220 (8.66)	350 (13.78)	[1]	[2]
• Depth	mm (in)	180 (7.09)	180 (7.09)	180 (7.09)	[1]	[2]
Weight, approx.	kg (lb)	7 (15.4)	9.5 (20.9)	13.5 (29.8)	20.5 (45.2)	27 (59.5)
Suitable for PM240-2 Power Module	Type	6SL3210-1PE23-8 . L0 6SL3210-1PE24-5 . L0	6SL3210-1PE26-0 . L0 6SL3210-1PE27-5 . L0	6SL3210-1PE28-8 . L0 6SL3210-1PE31-1 . L0	6SL3210-1PE31-5 . L0 6SL3210-1PE31-8 . L0	6SL3210-1PE32-1 . L0 6SL3210-1PE32-5 . L0
• Frame size		FSD	FSD	FSE	FSF	FSF

[1] This braking resistor consists of the two braking resistors, JJY:023422620001 and JJY:023434020001, which must be connected in parallel on the plant/system side.

[2] This braking resistor consists of two JJY:023434020001 braking resistors, which must be connected in parallel on the plant/system side.

© Siemens AG 2017

Technical specifications (continued)

Line voltage 500 ... 690 V 3 AC		Braking resistor		
		JJY:023424020002	JJY:023434020002	JJY:023464020002 [1]
Resistance	Ω	31	21	10.5
Rated power P_{DB} (continuous braking power)	kW	1.85	2.75	5.5
Peak power P_{max} (load duration t_a = 12 s with period t = 240 s)	kW	37	55	110
Power connection		Cable	Cable	Cable
Thermostatic switch		Integrated	Integrated	Integrated
Degree of protection		IP21	IP21	IP21
Dimensions				
• Width	mm (in)	610 (24.0)	630 (24.8)	[1]
• Height	mm (in)	220 (8.66)	350 (13.78)	[1]
• Depth	mm (in)	180 (7.09)	180 (7.09)	[1]
Weight, approx.	kg (lb)	9.5 (20.9)	13.5 (29.7)	27 (59.5)
Suitable for PM240-2 Power Module	Type	6SL3210-1PH21-4 . L0 6SL3210-1PH22-0 . L0 6SL3210-1PH22-3 . L0 6SL3210-1PH22-7 . L0 6SL3210-1PH23-5 . L0 6SL3210-1PH24-2 . L0	6SL3210-1PH25-2 . L0 6SL3210-1PH26-2 . L0	6SL3210-1PH28-0 . L0 6SL3210-1PH31-0 . L0 6SL3210-1PH31-2 . L0 6SL3210-1PH31-4 . L0
• Frame size		FSD	FSE	FSF

Characteristic curves

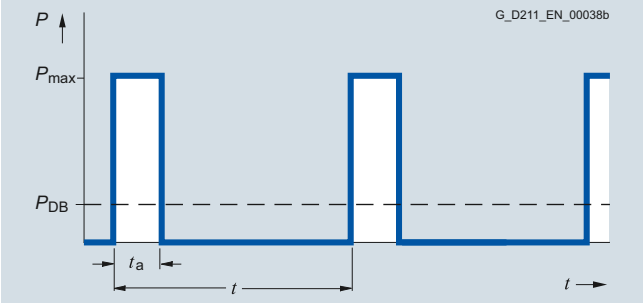

Load diagram for the braking resistors

t_a = 12 s (see section Technical specifications)
t = 240 s (see section Technical specifications)

[1] This braking resistor consists of two JJY:023434020002 braking resistors, which must be connected in parallel on the plant/system side.

© Siemens AG 2017

Overview

Output reactor for PM240-2 Power Modules, frame size FSA

Output reactors reduce the rate of voltage rise (*dv/dt*) and the height of the current peaks, and enable longer motor cables to be connected.

Owing to the high rates of voltage rise of the fast-switching IGBTs, the capacitance of long motor cables reverses polarity very quickly with every switching operation in the inverter. As a result, the inverter is loaded with additional current peaks of substantial magnitude.

Output reactors reduce the magnitude of these additional peaks because the cable capacitance reverses polarity more slowly across the reactor inductance, thereby attenuating the amplitudes of the current peaks.

When using output reactors, the following should be observed:

- Max. permissible output frequency 150 Hz
- Max. permissible pulse frequency 4 kHz
- The output reactor must be installed as close as possible to the Power Module

Integration

Output reactors that are optionally available depending on the Power Module used

The following load-side power components are optionally available in the appropriate frames sizes for the Power Modules:

	Frame size					
	FSA	**FSB**	**FSC**	**FSD**	**FSE**	**FSF**
PM240-2 Power Module with integrated braking chopper						
Available frame sizes						
• 200 V versions	✓	✓	✓	✓	✓	✓
• 400 V versions	✓	✓	✓	✓	✓	✓
• 690 V versions	–	–	–	✓	✓	✓
Load-side power components						
Output reactor	S	S	S	S	S	S

S = Lateral mounting
– = Not possible

© Siemens AG 2017

Output reactors for blocksize format

Selection and ordering data

Type rating		PM240-2 Power Module standard variant		Output reactor
kW	hp	Type 6SL3210-...	Frame size	Article No.
200 ... 240 V 1 AC/3 AC				
0.55	0.75	1PB13-0 . L0	FSA	**6SL3202-0AE16-1CA0**
0.75	1	1PB13-8 . L0		
1.1	1.5	1PB15-5 . L0	FSB	**6SL3202-0AE16-1CA0**
1.5	2	1PB17-4 . L0	FSB	**6SL3202-0AE18-8CA0**
2.2	3	1PB21-0 . L0	FSB	**6SL3202-0AE21-8CA0**
3	4	1PB21-4 . L0	FSC	**6SL3202-0AE21-8CA0**
4	5	1PB21-8 . L0		
200 ... 240 V 3 AC				
5.5	7.5	1PC22-2 . L0	FSC	**6SL3202-0AE23-8CA0**
7.5	10	1PC22-8 . L0		
380 ... 480 V 3 AC				
0.55	0.75	1PE11-8 . L1	FSA	**6SL3202-0AE16-1CA0**
0.75	1	1PE12-3 . L1		
1.1	1.5	1PE13-2 . L1		
1.5	2	1PE14-3 . L1		
2.2	3	1PE16-1 . L1		
3	4	1PE18-0 . L1	FSA	**6SL3202-0AE18-8CA0**
4	5	1PE21-1 . L0	FSB	**6SL3202-0AE21-8CA0**
5.5	7.5	1PE21-4 . L0		
7.5	10	1PE21-8 . L0		
11	15	1PE22-7 . L0	FSC	**6SL3202-0AE23-8CA0**
15	20	1PE23-3 . L0		
22	30	1PE24-5 . L0	FSD	**6SE6400-3TC03-8DD0**
30	40	1PE26-0 . L0	FSD	**6SE6400-3TC07-5ED0**
37	50	1PE27-5 . L0		
45	60	1PE28-8 . L0	FSE	**6SE6400-3TC07-5ED0**
55	75	1PE31-1 . L0	FSE	**6SE6400-3TC14-5FD0**
75	100	1PE31-5 . L0	FSF	**6SE6400-3TC14-5FD0**
90	125	1PE31-8 . L0		
110	150	1PE32-1 . L0	FSF	**6SL3000-2BE32-1AA0**
132	200	1PE32-5 . L0	FSF	**6SL3000-2BE32-6AA0**
500 ... 690 V 3 AC				
75	75	1PH28-0 . L0	FSF	**6SL3000-2AH31-0AA0**
90	100	1PH31-0 . L0		
110	100	1PH31-2 . L0	FSF	**6SL3000-2AH31-5AA0**
132	125	1PH31-4 . L0		

Type rating		PM240-2 Power Module push-through variant		Output reactor
kW	hp	Type 6SL3211-...	Frame size	Article No.
200 ... 240 V 1 AC/3 AC				
0.75	1	1PB13-8 . L0	FSA	**6SL3202-0AE16-1CA0**
2.2	3	1PB21-0 . L0	FSB	**6SL3202-0AE21-8CA0**
4	5	1PB21-8 . L0	FSC	**6SL3202-0AE21-8CA0**
380 ... 480 V 3 AC				
3	4	1PE18-0 . L1	FSA	**6SL3202-0AE18-8CA0**
7.5	10	1PE21-8 . L0	FSB	**6SL3202-0AE21-8CA0**
15	20	1PE23-3 . L0	FSC	**6SL3202-0AE23-8CA0**

© Siemens AG 2017

Technical specifications

Line voltage 200 ... 240 V 1 AC/3 AC or 380 ... 480 V 3 AC		**Output reactor (for a 4 kHz pulse frequency)**			
		6SL3202-0AE16-1CA0	6SL3202-0AE18-8CA0	6SL3202-0AE21-8CA0	6SL3202-0AE23-8CA0
Rated current	A	6.1	9	18.5	39
Power loss, max.	kW	0.09	0.08	0.08	0.11
Connection to the Power Module/ motor connection		Screw terminals	Screw terminals	Screw terminals	Screw terminals
• Conductor cross-section	mm^2	4	4	10	16
PE connection		M4 screw stud	M4 screw stud	M5 screw stud	M5 screw stud
Cable length, max. between output reactor and motor					
• 200 -10 % ... 240 V +10 % 3 AC and 380 -10 % ... 415 V +10 % 3 AC					
- Shielded	m (ft)	150 (492)	150 (492)	150 (492)	150 (492)
- Unshielded	m (ft)	225 (738)	225 (738)	225 (738)	225 (738)
• 440 ... 480 V 3 AC +10 %					
- Shielded	m (ft)	100 (328)	100 (328)	100 (328)	100 (328)
- Unshielded	m (ft)	150 (492)	150 (492)	150 (492)	150 (492)
Dimensions					
• Width	mm (in)	207 (8.15)	207 (8.15)	247 (9.72)	257 (10.12)
• Height	mm (in)	175 (6.89)	180 (7.09)	215 (8.46)	235 (9.25)
• Depth	mm (in)	72.5 (2.85)	72.5 (2.85)	100 (3.94)	114.7 (4.52)
Degree of protection		IP20	IP20	IP20	IP20
Weight, approx.	kg (lb)	3.4 (7.50)	3.9 (8.60)	10.1 (22.3)	11.2 (24.7)
Suitable for PM240-2 standard variant 200 ... 240 V 1 AC/3 AC	Type	6SL3210-1PB13-0 . L0 6SL3210-1PB13-8 . L0 FSA 6SL3210-1PB15-5 . L0 FSB	6SL3210-1PB17-4 . L0 FSB	6SL3210-1PB21-0 . L0 6SL3210-1PB21-4 . L0 FSB 6SL3210-1PB21-8 . L0 FSC	6SL3210-1PC22-2 . L0 6SL3210-1PC22-8 . L0 FSC
Suitable for PM240-2 standard variant 380 ... 480 V 3 AC	Type	6SL3210-1PE11-8 . L1 6SL3210-1PE12-3 . L1 6SL3210-1PE13-2 . L1 6SL3210-1PE14-3 . L1 6SL3210-1PE16-1 . L1 FSA	6SL3210-1PE18-0 . L1 FSA	6SL3210-1PE21-1 . L0 6SL3210-1PE21-4 . L0 6SL3210-1PE21-8 . L0 FSB	6SL3210-1PE22-7 . L0 6SL3210-1PE23-3 . L0° FSC
Suitable for PM240-2 push-through variant 200 ... 240 V 1 AC/3 AC	Type	6SL3211-1PB13-8 . L0 FSA	–	6SL3211-1PB21-0 . L0 FSB 6SL3211-1PB21-8 . L0 FSC	–
Suitable for PM240-2 push-through variant 380 ... 480 V 3 AC	Type	–	6SL3211-1PE18-0 . L1 FSA	6SL3211-1PE21-8 . L0 FSB	6SL3211-1PE23-3 . L0 FSC

© Siemens AG 2017

Technical specifications (continued)

Line voltage 380 ... 480 V 3 AC		Output reactor (for a 4 kHz pulse frequency)				
		6SE6400-3TC03-8DD0	6SE6400-3TC07-5ED0	6SE6400-3TC14-5FD0	6SL3000-2BE32-1AA0	6SL3000-2BE32-6AA0
Rated current	A	45	90	178	210	260
Power loss, max.	kW	0.2	0.27	0.47	0.49	0.5
Connection to the Power Module/ motor connection		Flat connector for M6 screw	Flat connector for M6 screw	Flat connector for M8 screw	Flat connector for M10 screw	Flat connector for M10 screw
PE connection		M6 screw	M6 screw	M8 screw	M8 screw	M8 screw
Cable length, max. between output reactor and motor						
• Shielded	m (ft)	200 (656)	200 (656)	200 (656)	300 (984)	300 (984)
• Unshielded	m (ft)	300 (984)	300 (984)	300 (984)	450 (1476)	450 (1476)
Dimensions						
• Width	mm (in)	225 (8.86)	270 (10.6)	350 (13.78)	300 (11.81)	300 (11.8)
• Height	mm (in)	210 (8.27)	248 (9.76)	321 (12.64)	285 (11.22)	315 (12.40)
• Depth	mm (in)	179 (7.05)	209 (8.23)	288 (11.34)	257 (10.12)	277 (10.91)
Degree of protection		IP00	IP00	IP00	IP00	IP00
Weight, approx.	kg (lb)	19 (41.9)	27 (59.5)	57 (126)	60 (132)	66 (146)
Suitable for PM240-2 standard variant	Type	6SL3210-1PE24-5 . L0 FSD	6SL3210-1PE26-0 . L0 6SL3210-1PE27-5 . L0 FSD 6SL3210-1PE28-8 . L0 FSE	6SL3210-1PE31-1 . L0 FSE 6SL3210-1PE31-5 . L0 6SL3210-1PE31-8 . L0 FSF	6SL3210-1PE32-1 . L0 FSF	6SL3210-1PE32-5 . L0 FSF

Line voltage 500 ... 690 V 3 AC		Output reactor (for a 4 kHz pulse frequency)	
		6SL3000-2AH31-0AA0	6SL3000-2AH31-5AA0
Rated current	A	100	150
Power loss, max.	kW	0.3	0.34
Connection to the Power Module/ motor connection		Flat connector for M10 screw	Flat connector for M10 screw
PE connection		M6 screw	M6 screw
Cable length, max. between output reactor and motor			
• Shielded	m (ft)	300 (984)	300 (984)
• Unshielded	m (ft)	450 (1476)	450 (1476)
Dimensions			
• Width	mm (in)	270 (10.63)	270 (10.63)
• Height	mm (in)	248 (9.76)	248 (9.76)
• Depth	mm (in)	200 (7.87)	200 (7.87)
Degree of protection		IP00	IP00
Weight, approx.	kg (lb)	25 (55.1)	25.8 (56.9)
Suitable for PM240-2 standard variant	Type	6SL3210-1PH28-0 . L0 6SL3210-1PH31-0 . L0 FSF	6SL3210-1PH31-2 . L0 6SL3210-1PH31-4 . L0 FSF

© Siemens AG 2017

Overview

It is advisable to use an optionally available mounting frame to install the push-through unit in a control cabinet. This mounting frame includes the necessary seals and frame to ensure compliance with degree of protection IP54.

If the Power Module is installed without use of the optional mounting frame, the user is responsible for ensuring that the requisite degree of protection is provided.

Tightening torque for fixing the mounting frame and the inverter: 3 ... 3.5 Nm.

Selection and ordering data

Description	Article No.
Push-through mounting frame	
• For PM240-2 Power Modules degree of protection IP20, push-through variants	
- Frame size FSA	**6SL3260-6AA00-0DA0**
- Frame size FSB	**6SL3260-6AB00-0DA0**
- Frame size FSC	**6SL3260-6AC00-0DA0**

© Siemens AG 2017

Safe Brake Relay for blocksize format

Overview

Safe Brake Relay

With the Safe Brake Relay, the brake is controlled in accordance with IEC 61508 SIL 2 and EN ISO 13849-1 PL d and Category 3.

Design

The Safe Brake Relay can be installed below the Power Module on the shield connection plate.

The Safe Brake Relay has the following connections and interfaces:

- 1 two-channel transistor output stage to control the motor brake solenoid
- 1 connection for the cable harness (CTRL) to the Power Module in blocksize format
- 1 connection for the 24 V DC power supply

The connection between the 24 V DC supply and the Safe Brake Relay must be kept as short as possible.

The scope of supply of a Safe Brake Relay includes the following:

- 2 cable harnesses for connecting to the CTRL socket of the Power Module
  - Length 0.32 m (1.05 ft) for frame sizes FSA to FSC
  - Length 0.55 m (1.80 ft) for frame sizes FSD to FSF

Selection and ordering data

Description	Article No.
Safe Brake Relay Including cable harness for connection to Power Module	**6SL3252-0BB01-0AA0**

Technical specifications

	Safe Brake Relay 6SL3252-0BB01-0AA0
Power supply	20.4 ... 28.8 V DC Recommended rated supply voltage 26 V DC (to compensate for voltage drop in feeder cable to 24 V DC motor brake solenoid)
Current requirement, max.	
• Motor brake	2 A
• At 24 V DC	0.05 A + the current requirement of motor brake
Conductor cross-section, max.	2.5 mm^2
Dimensions	
• Width	69 mm (2.72 in)
• Height	63 mm (2.48 in)
• Depth	33 mm (1.30 in)
Weight, approx.	0.17 kg (0.37 lb)

Integration

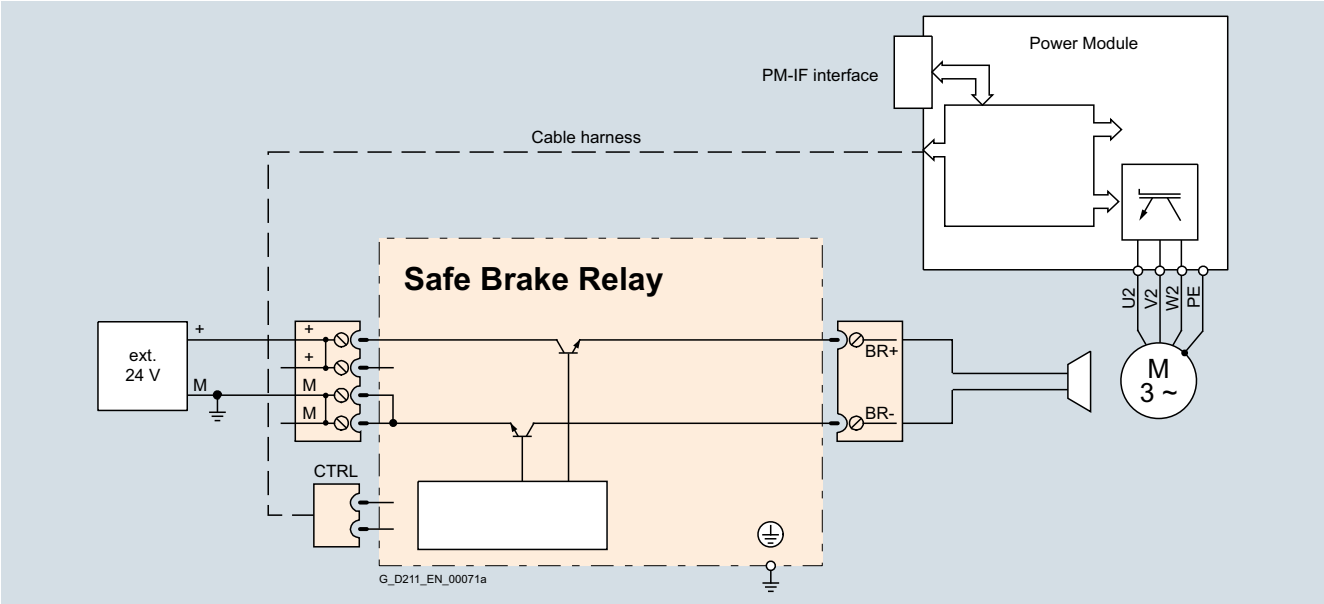

Connection example of a Safe Brake Relay

The 24 V DC solenoid of the motor brake is directly connected to the Safe Brake Relay. External overvoltage limiters are not required.

© Siemens AG 2017

Overview

DMC20 DRIVE-CLiQ Hub Module

The DMC20 DRIVE-CLiQ Hub Module is used to implement a star-shaped topology of a DRIVE-CLiQ line. Two DMC20 DRIVE-CLiQ Hub Modules can be connected in series (cascaded).

Design

The DMC20 DRIVE-CLiQ Hub Module in degree of protection IP20 is designed for mounting in control cabinets.

The following are located on the DMC20 DRIVE-CLiQ Hub Module:

- 6 DRIVE-CLiQ sockets for connecting 5 DRIVE-CLiQ devices
- 1 connection for the electronics power supply via the 24 V DC supply connector

The status of the DMC20 DRIVE-CLiQ Hub Module is indicated via a multi-color LED.

The DMC20 DRIVE-CLiQ Hub Module can be snapped onto a TH 35 standard mounting rail in accordance with EN 60715 (IEC 60715).

Selection and ordering data

Description	Article No.
DMC20 DRIVE-CLiQ Hub Module Without DRIVE-CLiQ cable	**6SL3055-0AA00-6AA1**
Accessories for re-ordering	
Dust protection blanking plugs (50 units) For DRIVE-CLiQ port	**6SL3066-4CA00-0AA0**

Technical specifications

	DMC20 DRIVE-CLiQ Hub Module 6SL3055-0AA00-6AA1
Current requirement, max. at 24 V DC without DRIVE-CLiQ supply	0.15 A
• Conductor cross-section, max.	2.5 mm^2
Degree of protection	IP20
Dimensions	
• Width	30 mm (1.18 in)
• Height	151 mm (5.94 in)
• Depth	110 mm (4.33 in)
Weight, approx.	0.36 kg (0.79 lb)
Certificate of suitability	cULus

Integration

Signals from more than one encoder can be collected with one DRIVE-CLiQ Hub Module and forwarded to the Control Unit through a single DRIVE-CLiQ cable.

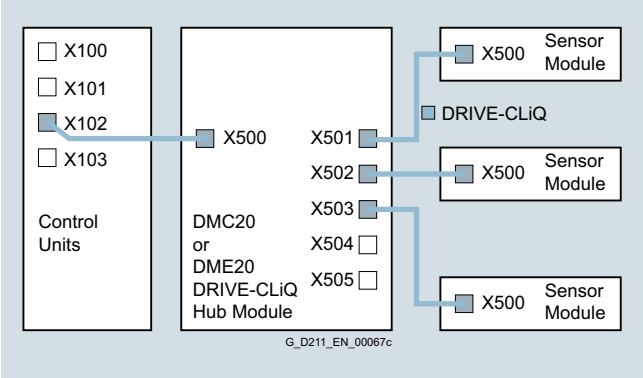

With a DRIVE-CLiQ Hub Module, individual DRIVE-CLiQ nodes can be removed without interrupting the data exchange with the remaining devices in the DRIVE-CLiQ line.

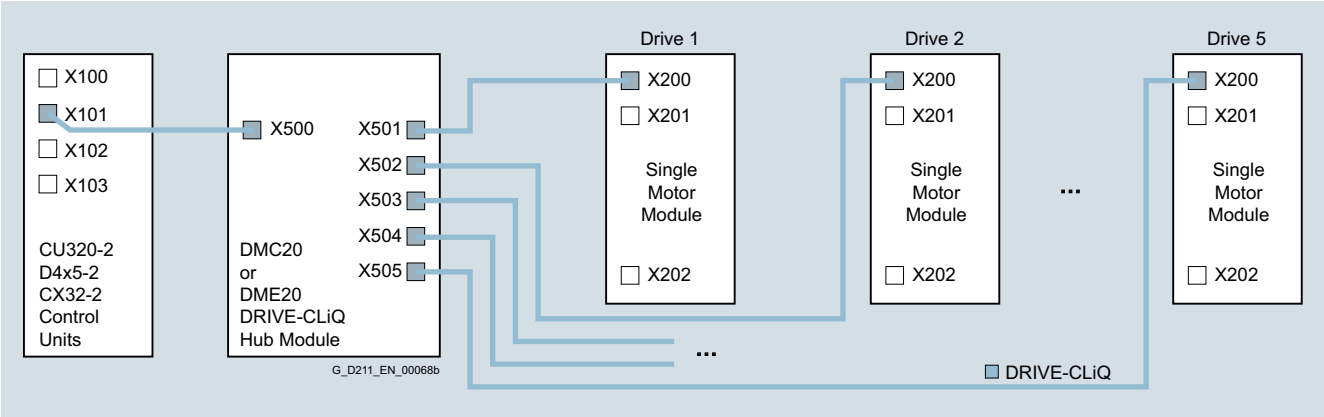

© Siemens AG 2017

Overview

DME20 DRIVE-CLiQ Hub Module

The DME20 DRIVE-CLiQ Hub Module is used to implement a star-shaped topology of a DRIVE-CLiQ line. Two DME20 DRIVE-CLiQ Hub Modules can be connected in series (cascaded).

Design

The following are located on the DME20 DRIVE-CLiQ Hub Module:

- 6 DRIVE-CLiQ sockets for connecting 5 DRIVE-CLiQ devices
- 1 connection for the electronics power supply via the 24 V DC circular supply connector with conductor cross-section 4 × 0.75 mm^2 (pins 1+2 internally bridged; pins 3+4 internally bridged)

The scope of supply of the DME20 DRIVE-CLiQ Hub Modules includes:

- 6 blanking plugs for sealing unused DRIVE-CLiQ sockets

Selection and ordering data

Description	Article No.
DME20 DRIVE-CLiQ Hub Module Without DRIVE-CLiQ cable; without electronics power supply cable and circular connector for 24 V DC	**6SL3055-0AA00-6AB0**
Accessories	
24 V DC power supply cable	Ordering and delivery Phoenix Contact www.phoenixcontact.com
• Shielded connector, 5-pole, can be assembled by the user	Type No. 1508365
• Unshielded connector, 4-pole, can be assembled by the user, Speedcon rapid interlock	Type No. 1521601
Accessories for re-ordering	
SINAMICS dust protection blanking plugs IP67 (6 units) For DRIVE-CLiQ port	**6SL3066-4CA01-0AA0**

Technical specifications

	DME20 DRIVE-CLiQ Hub Module 6SL3055-0AA00-6AB0
Current requirement, max. at 24 V DC without DRIVE-CLiQ supply	0.15 A
• Conductor cross-section, max.	4 × 0.75 mm^2
Degree of protection	IP67
Dimensions	
• Width	99 mm (3.90 in)
• Height	149 mm (5.87 in)
• Depth	55.7 mm (2.19 in); (without connector)
Weight, approx.	0.8 kg (1.76 lb)
Certificate of suitability	cULus

Integration

Signals from more than one encoder can be collected with one DRIVE-CLiQ Hub Module and forwarded to the Control Unit through a single DRIVE-CLiQ cable.

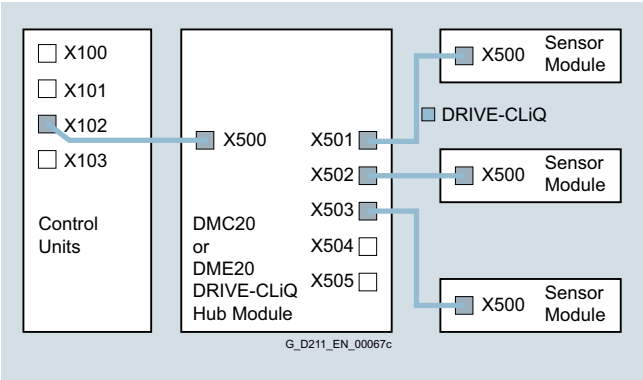

© Siemens AG 2017

Integration (continued)

With a DRIVE-CLiQ Hub Module, individual DRIVE-CLiQ nodes can be removed without interrupting the data exchange with the remaining devices in the DRIVE-CLiQ line.

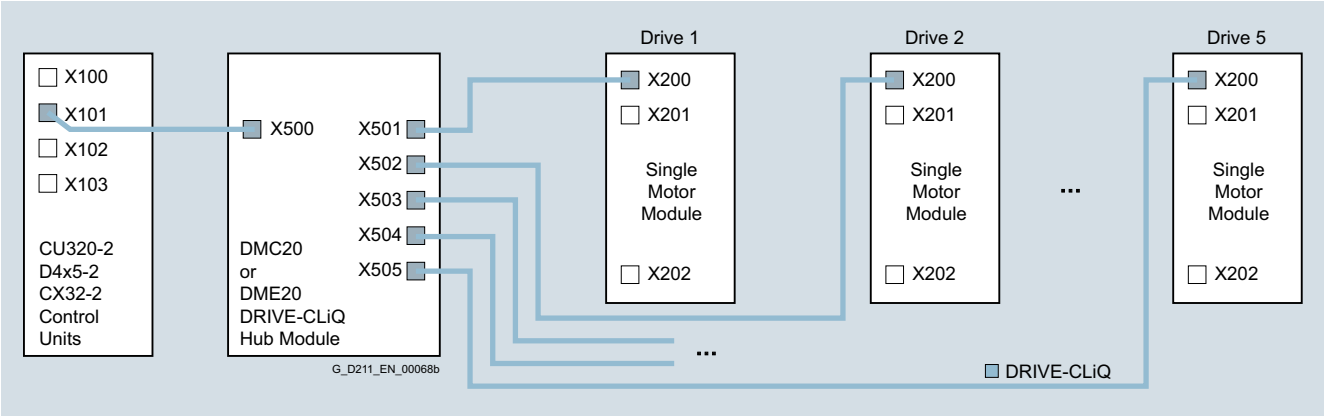

The DME20 DRIVE-CLiQ Hub Module in degree of protection IP67 is suitable for installation outside control cabinets.

© Siemens AG 2017

Overview

TM15 Terminal Module

The number of available digital inputs and outputs within a drive system can be expanded with the TM15 Terminal Module.

Design

The TM15 Terminal Module is equipped with the following:

- 24 bidirectional digital inputs/outputs (electrical isolation in 3 groups with 8 channels per group)
- 24 green status LEDs for indicating the logical signal state of the corresponding terminal
- 2 DRIVE-CLiQ sockets
- 1 connection for the electronics power supply via the 24 V DC power supply connector
- 1 PE (protective earth) connection

The status of the TM15 Terminal Module is indicated via a multi-color LED.

The TM15 Terminal Module can be snapped onto a TH 35 standard mounting rail in accordance with EN 60715 (IEC 60715).

The signal cable shield can be connected to the TM15 Terminal Module by means of a shield connection terminal, e.g. Phoenix Contact type SK8 or Weidmüller type KLBÜ CO 1. The shield connection terminal must not be used as a strain relief mechanism.

Selection and ordering data

Description	Article No.
TM15 Terminal Module Without DRIVE-CLiQ cable	**6SL3055-0AA00-3FA0**
Accessories for re-ordering	
Dust protection blanking plugs (50 units) For DRIVE-CLiQ port	**6SL3066-4CA00-0AA0**

Technical specifications

	TM15 Terminal Module 6SL3055-0AA00-3FA0
Current requirement, max. at 24 V DC without load	0.15 A
• Conductor cross-section, max.	2.5 mm^2
• Fuse protection, max.	20 A
Number of DRIVE-CLiQ sockets	2
I/O	
• Digital inputs/outputs	Parameterizable channel-by-channel as DI or DO
• Number of digital inputs/outputs	24
• Isolation	Yes, in groups of 8
• Cables and connections	Plug-in screw-type terminals
• Conductor cross-section, max.	1.5 mm^2
Digital inputs	
• Voltage	-30 ... +30 V
• Low level (an open digital input is interpreted as "low")	-30 ... +5 V
• High level	15 ... 30 V
• Current consumption at 24 V DC	9 mA
• Delay times of digital inputs, typ.[1]	
- L → H	50 µs
- H → L	100 µs
Digital outputs (continuously short-circuit proof)	
• Voltage	24 V DC
• Load current per digital output, max.	0.5 A
• Delay times (resistive load) [1]	
- L → H, typ.	50 µs
- L → H, max.	100 µs
- H → L, typ.	150 µs
- H → L, max.	225 µs
• Total current of outputs (per group), max.	
- To 60 °C (140 °F)	2 A
- To 50 °C (122 °F)	3 A
- To 40 °C (104 °F)	4 A
Power loss, max.	3 W
PE connection	M4 screw
Dimensions	
• Width	50 mm (1.97 in)
• Height	150 mm (5.91 in)
• Depth	111 mm (4.37 in)
Weight, approx.	1 kg (2.20 lb)
Certificate of suitability	cULus

[1] The specified delay times refer to the hardware. The actual reaction time depends on the time slot in which the digital input/output is processed.

© Siemens AG 2017

Integration

The TM15 Terminal Module can communicate with the following Control Units via DRIVE-CLiQ:

- CU310-2 Control Unit
- CU320-2 Control Unit
- SINUMERIK Control Unit
- SIMOTION D Control Unit
- SINAMICS DCM Advanced CUD

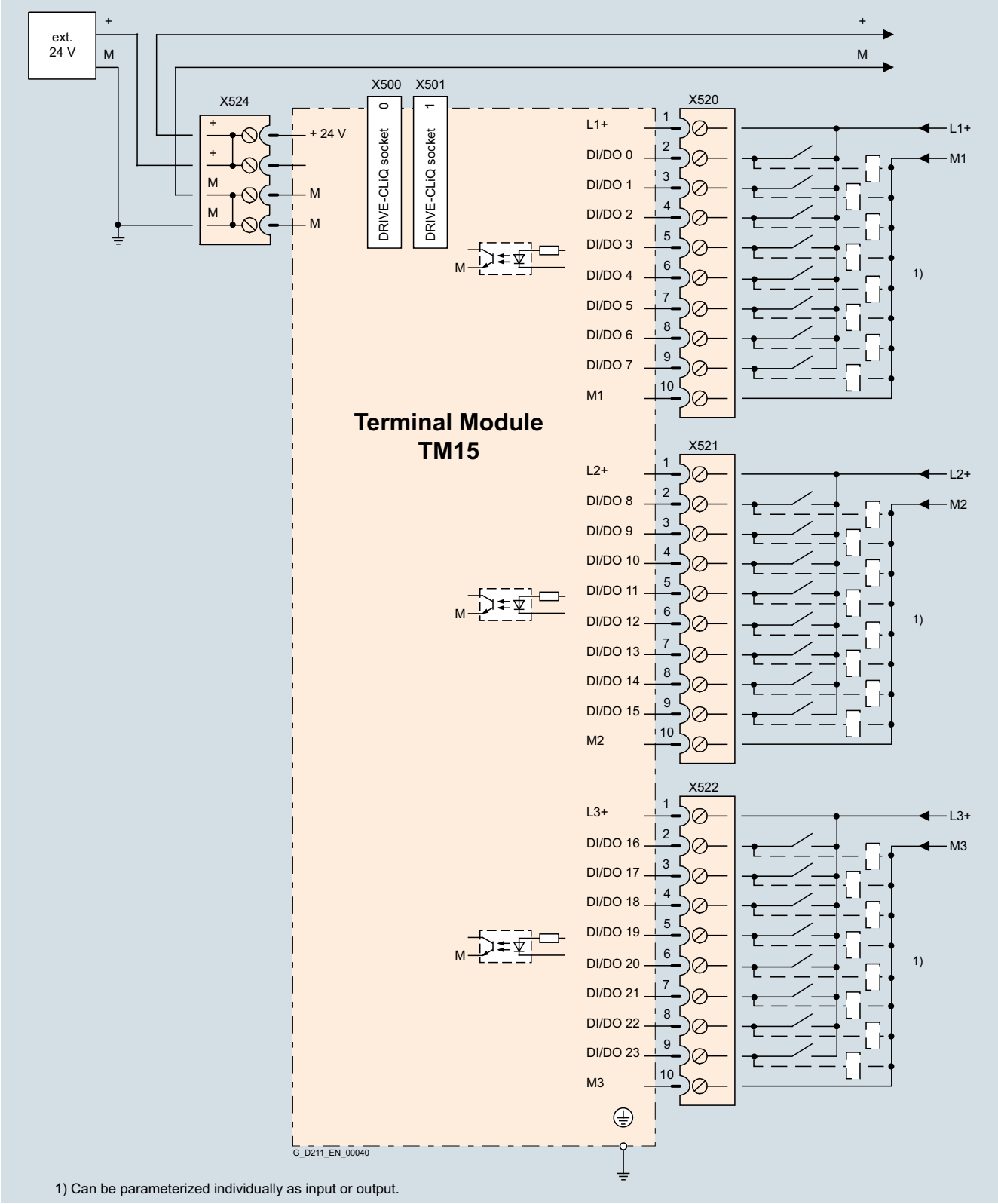

1) Can be parameterized individually as input or output.

Connection example of TM15 Terminal Module

© Siemens AG 2017

Overview

TM31 Terminal Module

With the TM31 Terminal Module, the number of available digital inputs and outputs and the number of analog input and outputs within a drive can be expanded.

The TM31 Terminal Module also features relay outputs with changeover contact and a temperature sensor input.

Design

The following are located on the TM31 Terminal Module:

- 8 digital inputs
- 4 bidirectional digital inputs/outputs
- 2 relay outputs with changeover contact
- 2 analog inputs
- 2 analog outputs
- 1 temperature sensor input for KTY84-130, Pt1000 or PTC (Pt1000 can be used from firmware V4.7 HF17)
- 2 DRIVE-CLiQ sockets
- 1 connection for the electronics power supply via the 24 V DC supply connector
- 1 PE (protective earth) connection

The status of the TM31 Terminal Module is indicated via a multi-color LED.

The TM31 Terminal Module can be snapped onto a TH 35 standard mounting rail in accordance with EN 60715 (IEC 60715).

The signal cable shield can be attached to the TM31 Terminal Module via a shield connection terminal, e.g. type SK8 supplied by Phoenix Contact or type KLBÜ CO 1 supplied by Weidmüller. The shield connection terminal must not be used as a strain relief mechanism.

Selection and ordering data

Description	Article No.
TM31 Terminal Module Without DRIVE-CLiQ cable	**6SL3055-0AA00-3AA1**
Accessories for re-ordering	
Dust protection blanking plugs (50 units) For DRIVE-CLiQ port	**6SL3066-4CA00-0AA0**

© Siemens AG 2017

Integration

The TM31 Terminal Module can communicate via DRIVE-CLiQ with the following Control Units.

- CU310-2 Control Unit
- CU320-2 Control Unit
- SINUMERIK Control Unit
- SIMOTION D Control Unit
- SINAMICS DCM Advanced CUD

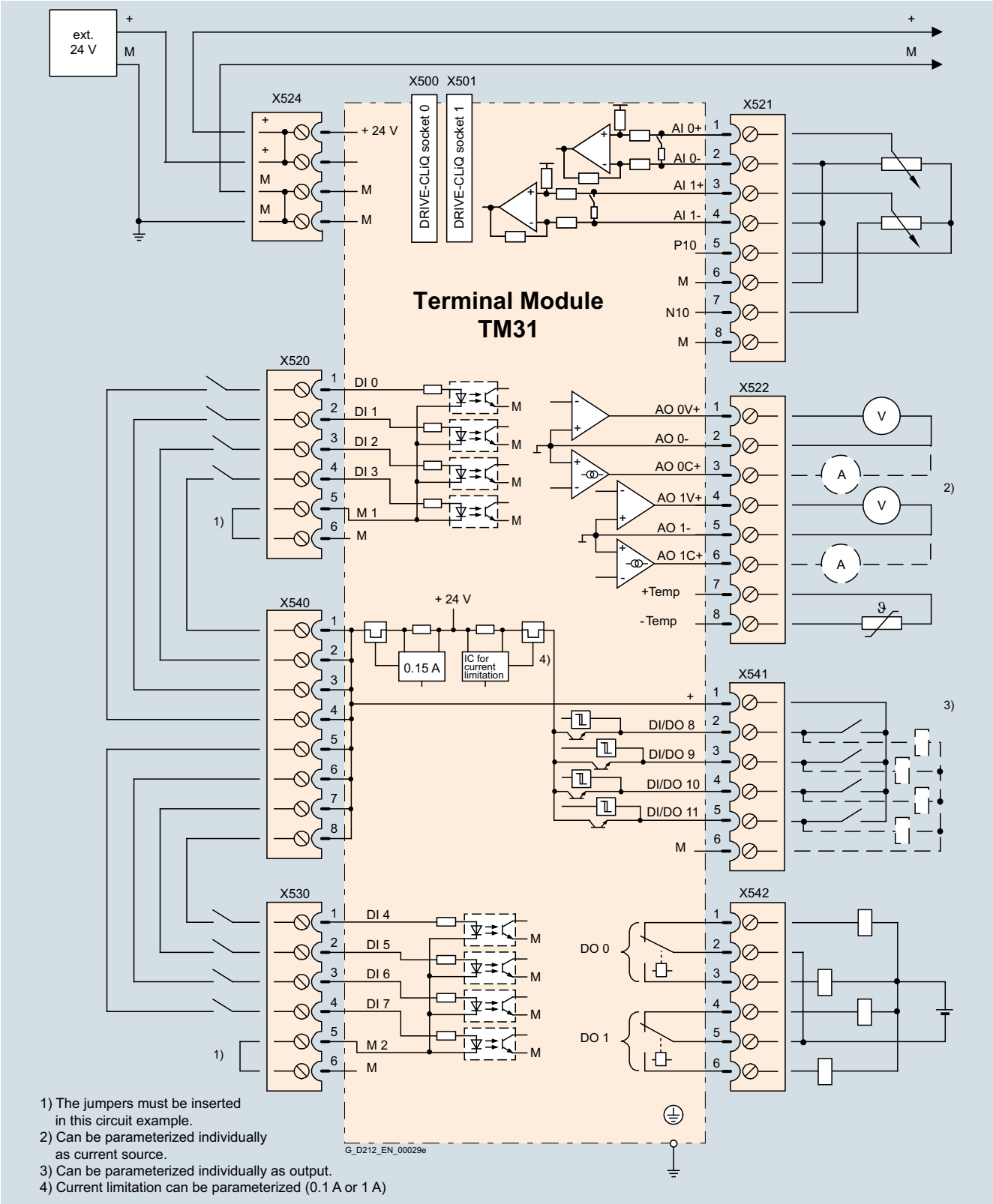

1) The jumpers must be inserted in this circuit example.
2) Can be parameterized individually as current source.
3) Can be parameterized individually as output.
4) Current limitation can be parameterized (0.1 A or 1 A)

Connection example of TM31 Terminal Module

© Siemens AG 2017

Technical specifications

	TM31 Terminal Module 6SL3055-0AA00-3AA1
Current requirement, max. At 24 V DC without taking account of the digital outputs and DRIVE-CLiQ supply	0.5 A
• Conductor cross-section, max.	2.5 mm^2
• Fuse protection, max.	20 A
Digital inputs In accordance with IEC 61131-2 Type 1	
• Voltage	-3 ... +30 V
• Low level (an open digital input is interpreted as "low")	-3 ... +5 V
• High level	15 ... 30 V
• Current consumption at 24 V DC, typ.	9 mA
• Delay times of digital inputs [1], approx.	
- L → H	50 µs
- H → L	100 µs
• Conductor cross-section, max.	1.5 mm^2
Digital outputs (continuously short-circuit proof)	
• Voltage	24 V DC
• Load current per digital output, max.	100 mA
• Total current of digital outputs, max.	400 mA
• Delay times of digital outputs [1]	
- Typ.	150 µs with 0.5 A resistive load
- Max.	500 µs
• Conductor cross-section, max.	1.5 mm^2
Analog inputs (a switch is used to toggle between voltage and current input)	
• As voltage input	
- Voltage range	-10 ... +10 V
- Internal resistance R_i	100 kΩ
- Resolution [2]	11 bits + sign
• As current input	
- Current ranges	4 ... 20 mA, -20 ... +20 mA, 0 ... 20 mA
- Internal resistance R_i	250 Ω
- Resolution [2]	10 bits + sign
• Conductor cross-section, max.	1.5 mm^2

	TM31 Terminal Module 6SL3055-0AA00-3AA1
Analog outputs (continuously short-circuit proof)	
• Voltage range	-10 ... +10 V
• Max. load current	-3 ... +3 mA
• Current ranges	4 ... 20 mA, -20 ... +20 mA, 0 ... 20 mA
• Load resistance, max.	500 Ω in the range -20 ... +20 mA
• Resolution	11 bits + sign
• Conductor cross-section, max.	1.5 mm^2
Relay outputs (CO contacts)	
• Max. load current	8 A
• Operational voltage, max.	250 V AC, 30 V DC
• Switching capacity, max.	
- At 250 V AC	2000 VA (cos φ = 1) 750 VA (cos φ = 0.4)
- At 30 V DC	240 W (resistive load)
• Required minimum current	100 mA
• Conductor cross-section, max.	2.5 mm^2
Power loss, max.	10 W
PE connection	M4 screw
Dimensions	
• Width	50 mm (1.97 in)
• Height	150 mm (5.91 in)
• Depth	111 mm (4.37 in)
Weight, approx.	0.49 kg (1.08 lb)
Certificate of suitability	cULus

[1] The specified delay times refer to the hardware. The actual reaction time depends on the time slot in which the digital input/output is processed.

[2] If the analog input is to be operated in the signal processing sense with continuously variable input voltage, the sampling frequency $f_a = 1/t_{time\ slice}$ must be at least twice the value of the highest signal frequency f_{max}.

© Siemens AG 2017

Overview

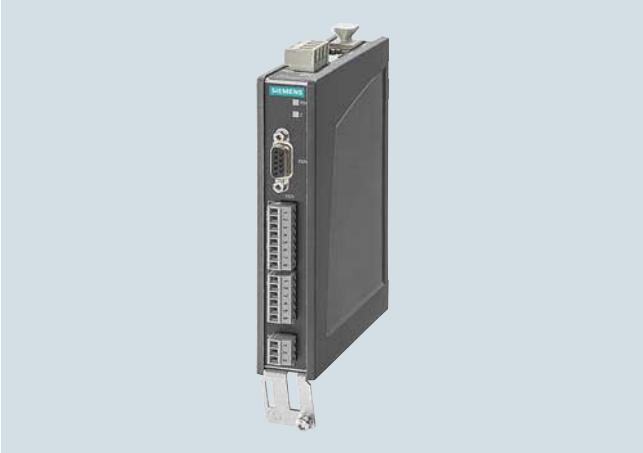

TM41 Terminal Module

The TM41 Terminal Module supplies TTL signals which emulate an incremental encoder, e.g. to a higher-level control. The encoder interface (incremental encoder emulation) can be linked to an encoder signal from the Control Unit, e.g. incremental encoder sin/cos, by parameter assignment.

The TM41 Terminal Module increases the number of digital inputs/outputs and analog inputs that are available in the drive system.

Design

The following are located on the TM41 Terminal Module:

- 4 bidirectional digital inputs/outputs
- 4 digital inputs (with electrical isolation)
- 1 analog input
- 1 interface for emulation of TTL incremental encoder (RS422)
- 1 LED for signaling zero mark detection for encoder interface
- 2 DRIVE-CLiQ sockets
- 1 connection for the electronics power supply and to supply the digital outputs via the 24 V DC power supply connector
- 1 PE (protective earth) connection

The status of the TM41 Terminal Module is indicated via a multi-color LED.
An LED next to the interface for TTL pulse encoder emulation is illuminated as soon as a zero mark is detected.

The TM41 Terminal Module can be snapped onto a TH 35 standard mounting rail in accordance with EN 60715 (IEC 60715).

The signal cable shield can be attached to the TM41 Terminal Module via a shield connection terminal, e.g. type SK8 supplied by Phoenix Contact or type KLBÜ CO 1 supplied by Weidmüller. The shield connection terminal must not be used as a strain relief mechanism.

Selection and ordering data

Description	Article No.
TM41 Terminal Module Without DRIVE-CLiQ cable	**6SL3055-0AA00-3PA1**
Accessories for re-ordering	
Dust protection blanking plugs (50 units) For DRIVE-CLiQ port	**6SL3066-4CA00-0AA0**

© Siemens AG 2017

Integration

The TM41 Terminal Module can communicate via DRIVE-CLiQ with the following Control Units.

- CU310-2 Control Unit
- CU320-2 Control Unit
- SINUMERIK Control Unit
- SIMOTION D Control Unit

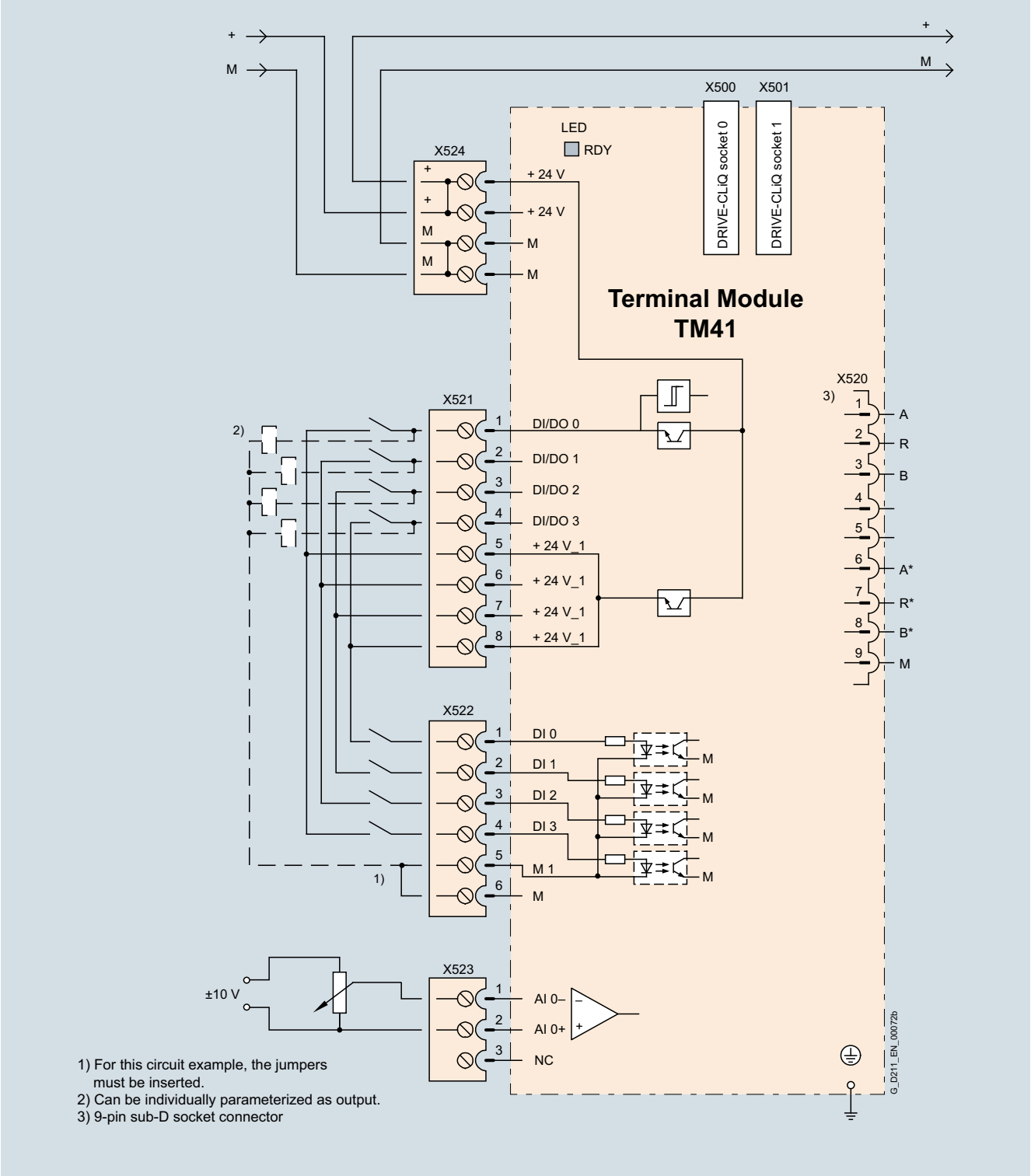

Connection example of TM41 Terminal Module

© Siemens AG 2017

Technical specifications

	TM41 Terminal Module 6SL3055-0AA00-3PA1
Current requirement (X524 at 24 V DC) without DRIVE-CLiQ supply or digital outputs (X514)	0.5 A
• Conductor cross-section, max.	2.5 mm^2
• Fuse protection, max.	20 A
I/O	
• Digital inputs/outputs	Individually parameterizable as DI or DO
• Number of digital inputs/outputs	4
• Number of digital input/outputs (with isolation)	4
• Cables and connections	Plug-in screw-type terminals
• Conductor cross-section, max.	1.5 mm^2
Digital inputs	
• Voltage	
- Without electrical isolation	-3 ... +30 V
- With electrical isolation	-30 ... +30 V
• Low level (an open digital input is interpreted as "low")	
- Without electrical isolation	-3 ... +5 V
- With electrical isolation	-30 ... +5 V
• High level	15 ... 30 V
• Current consumption at 24 V DC, typ.	<9 mA
• Delay times of digital inputs, max. [1]	
- L → H	3 ms
- H → L	3 ms
Digital outputs (continuously short-circuit proof)	
• Voltage	24 V DC
• Load current per digital output, max.	0.5 A
• Delay times (resistive load) [1]	
- L → H, typ.	50 µs
- L → H, max.	100 µs
- H → L, typ.	75 µs
- H → L, max.	150 µs

	TM41 Terminal Module 6SL3055-0AA00-3PA1
Analog input difference	
• Voltage range	-10 ... +10 V
• Internal resistance	≥100 kΩ
• Resolution [2]	12 bits + sign
Pulse encoder emulation	
• Level	TTL (RS422), A+, A-, B+, B-, zero track N+, N-
• Limit frequency $f_{max.}$	512 kHz
• Ratio Encoder pulses : Encoder emulation	Any number of ratio/ reduction ratio of pulses
Power loss, max.	12 W
PE connection	M4 screw
Dimensions	
• Width	30 mm (1.18 in)
• Height	151 mm (5.94 in)
• Depth	110 mm (4.33 in)
Weight, approx.	0.32 kg (0.71 lb)
Certificate of suitability	cULus

[1] The specified delay times refer to the hardware. The actual reaction time depends on the time slot in which the digital input/output is processed.

[2] If the analog input is to be operated in the signal processing sense with continuously variable input voltage, the sampling frequency $f_a = 1/t_{time\ slice}$ must be at least twice the value of the highest signal frequency f_{max}.

© Siemens AG 2017

Overview

TM54F Terminal Module

The TM54F Terminal Module is a dual-processor I/O interface with four fail-safe digital outputs and ten fail-safe digital inputs for utilization of the Safety Integrated functions of the SINAMICS S120 drive system via external actuators and sensors.

Every available safety function integrated in the drive can be controlled via the fail-safe digital inputs on the TM54F Terminal Module. In the event that the parameterized safety functions of several drives operated together on a Control Unit are to be executed together, then these drives can be grouped in the TM54F Terminal Module. The advantage of this approach is that only one fail-safe digital input needs to be connected for these drives.

The fail-safe digital inputs and outputs have two channels and are redundantly configured with an internal data cross-check using the two processors. A fail-safe digital output consists of one P-switching and one M-switching output as well as one digital input to read back the switching state. A fail-safe digital input consists of two digital inputs.

Safety sensors can be connected over two switchable 24 V sensor supplies and can be evaluated over the fail-safe digital inputs. The switchable 24 V sensor supply ensures that the fail-safe digital inputs can be dynamized to detect dormant errors (this dynamization is used to check the shutdown paths). An unswitchable 24 V sensor supply is additionally provided by the TM54F Terminal Module for connecting undynamizable safety sensors.

The TM54F Terminal Module must be directly connected to a Control Unit via a DRIVE-CLiQ cable. Only one TM54F Terminal Module can be assigned to each Control Unit. It is not permissible to make the TM54F connection via another DRIVE-CLiQ device, e.g. a Motor Module or a Line Module.

Design

The following are located on the TM54F Terminal Module:

- 4 fail-safe digital outputs
- 10 fail-safe digital inputs
- 4 LEDs, single color for indicating the status of the read back channel of the fail-safe digital outputs
- 4 LEDs, dual-color for indicating the status of the fail-safe digital outputs
- 20 LEDs, dual-color for indicating the status of the fail-safe digital inputs
- 3 LEDs, single color for indicating the status of the 24 V sensor supplies
- 2 DRIVE-CLiQ sockets
- 2 connections for 24 V sensor supply, switchable
- 1 connection for 24 V sensor supply, not switchable
- 1 connection for the electronics power supply via the 24 V DC power supply connector
- 1 connection for the 24 V power supply to digital outputs and sensors
- 1 PE (protective earth) connection

The status of the TM54F Terminal Module is indicated via a multi-color LED.

The TM54F Terminal Module can be snapped onto a TH 35 standard mounting rail in accordance with EN 60715 (IEC 60715).

The signal cable shield can be attached to the TM54F Terminal Module via a shield connection terminal, e.g. type SK8 supplied by Phoenix Contact or type KLBÜ CO 1 supplied by Weidmüller. The shield connection terminal must not be used as a strain relief mechanism.

Pins for connector coding are included in the TM54F Terminal Module scope of supply.

Selection and ordering data

Description	Article No.
TM54F Terminal Module Without DRIVE-CLiQ cable	**6SL3055-0AA00-3BA0**
Accessories for re-ordering	
Dust protection blanking plugs (50 units) For DRIVE-CLiQ port	**6SL3066-4CA00-0AA0**

Integration

The TM54F Terminal Module can communicate via DRIVE-CLiQ with the following Control Units.

- CU310-2 Control Unit
- CU320-2 Control Unit
- SINUMERIK Control Unit
- SIMOTION D Control Unit or Controller Extension

© Siemens AG 2017

Integration (continued)

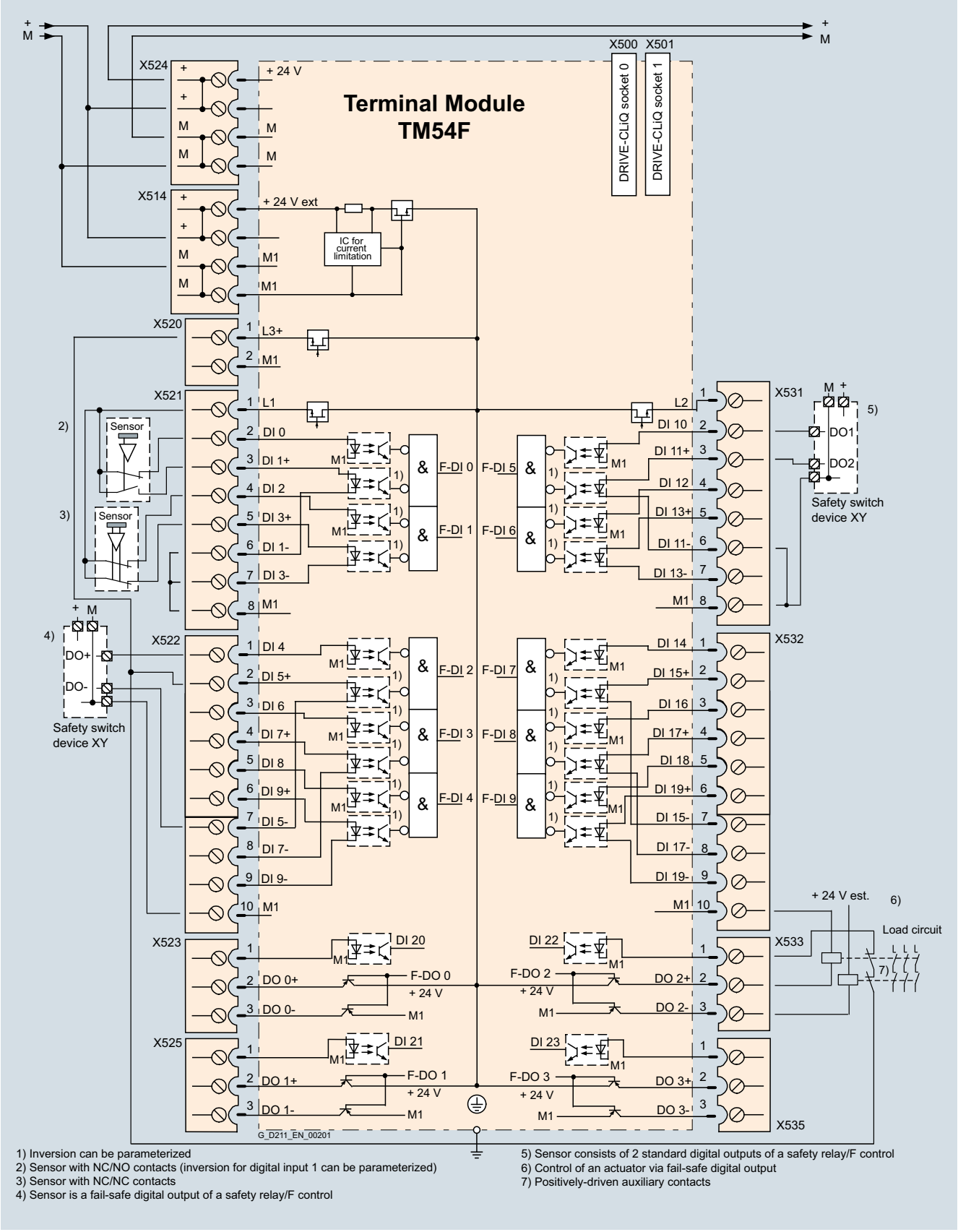

1) Inversion can be parameterized
2) Sensor with NC/NO contacts (inversion for digital input 1 can be parameterized)
3) Sensor with NC/NC contacts
4) Sensor is a fail-safe digital output of a safety relay/F control
5) Sensor consists of 2 standard digital outputs of a safety relay/F control
6) Control of an actuator via fail-safe digital output
7) Positively-driven auxiliary contacts

Connection example of TM54F Terminal Module

© Siemens AG 2017

Technical specifications

	TM54F Terminal Module 6SL3055-0AA00-3BA0
Current requirement (X524 at 24 V DC) without DRIVE-CLiQ supply	0.2 A
• Conductor cross-section, max.	2.5 mm^2
• Fuse protection, max.	20 A
Max. current requirement ext. 24 V for supplying the digital outputs and 24 V sensor supply (X514 at 24 V DC)	4 A
• Conductor cross-section, max.	2.5 mm^2
• Fuse protection, max.	20 A
I/O	
• Number of fail-safe digital inputs	10
• Number of fail-safe digital outputs	4
• 24 V sensor supply	3, of which 2 can be temporarily shut down using an internal test routine for dynamizing fail-safe digital inputs, current carrying capacity 0.5 A each
• Cables and connections	Plug-in screw-type terminals
• Conductor cross-section, max.	1.5 mm^2
Digital inputs in accordance with IEC 61131-2 Type 1, with galvanic isolation	
• Voltage	-3 ... +30 V
• Low level (an open digital input is interpreted as "low")	-3 ... +5 V
• High level	15 ... 30 V
• Current consumption at 24 V DC, typ.	>3.2 mA
• Delay time of digital inputs, approx. [1]	
- L → H, typ.	30 µs
- H → L, typ.	60 µs
• Safe state	Low level (for inputs that can be inverted: without inversion)

	TM54F Terminal Module 6SL3055-0AA00-3BA0
Digital outputs sustained-short-circuit-proof	
• Voltage	24 V DC
• Load current per fail-safe digital output, max. [2]	0.5 A
• Delay times (resistive load) [1]	
- L → H, typ.	300 µs
- H → L, typ.	350 µs
• Safe state	Output switched off
Scanning cycle t_{SI} for fail-safe digital inputs or fail-safe digital outputs	4 ... 25 ms (adjustable)
Power loss, max. At 24 V	4.5 W
PE connection	M4 screw
Dimensions	
• Width	50 mm (1.97 in)
• Height	151 mm (5.94 in)
• Depth	110 mm (4.33 in)
Weight, approx.	kg (1.98 lb)
Certificate of suitability	cULus
Safety Integrated	Acc. to IEC 61508 SIL 2 and EN ISO 13849-1 PL d and Category 3

[1] The specified delay times refer to the hardware. The actual reaction time depends on the time slot in which the digital input/output is processed.

[2] The total current of all fail-safe digital outputs must not exceed 5.33 A.

© Siemens AG 2017

Overview

TM120 Terminal Module

Four temperature sensors can be evaluated via the TM120 Terminal Module. The temperature sensor inputs are safely electrically isolated from the evaluation electronics in the TM120 Terminal Module and are suitable for evaluating the temperature of special motors, e.g. SIMOTICS L-1FN linear motors and SIMOTICS T-1FW6 built-in torque motors.

Design

The following are located on the TM120 Terminal Module:

- 4 temperature sensor inputs for KTY84-130, Pt1000 or PTC (Pt1000 can be used from firmware V4.7 HF17)
- 2 DRIVE-CLiQ sockets
- 1 connection for the electronics power supply via the 24 V DC supply connector
- 1 PE/protective conductor connection

The status of the TM120 Terminal Module is indicated via a multi-color LED.

The TM120 Terminal Module can be snapped onto a TH 35 standard mounting rail in accordance with EN 60715 (IEC 60715).

Selection and ordering data

Description	Article No.
TM120 Terminal Module Without DRIVE-CLiQ cable	**6SL3055-0AA00-3KA0**
Accessories for re-ordering	
Dust protection blanking plugs (50 units) For DRIVE-CLiQ port	**6SL3066-4CA00-0AA0**

Technical specifications

	TM120 Terminal Module 6SL3055-0AA00-3KA0
Current requirement, max. at 24 V DC	0.5 A
• Conductor cross-section, max.	2.5 mm^2
• Fuse protection, max.	20 A
Temperature sensor inputs The inputs can be individually parameterized to evaluate sensors of type KTY84-130, Pt1000, PTC or temperature switches	
• Conductor cross-section	0.2 ... 6 mm^2
• Constant current per sensor, approx.	2 mA
• Safe electrical separation up to line voltage, max.	480 V AC
Power loss, typically	2.4 W
PE connection	M4 screw
Dimensions	
• Width	30 mm (1.18 in)
• Height	150 mm (5.91 in)
• Depth	111 mm (4.37 in)
Weight, approx.	0.41 kg (0.90 lb)

© Siemens AG 2017

Integration

The TM120 Terminal Module can communicate via DRIVE-CLiQ with the following Control Units with SINAMICS firmware version V4.3 and higher:

- CU310-2 Control Unit
- CU320-2 Control Unit
- SINUMERIK Control Unit
- SIMOTION D Control Unit or Controller Extension

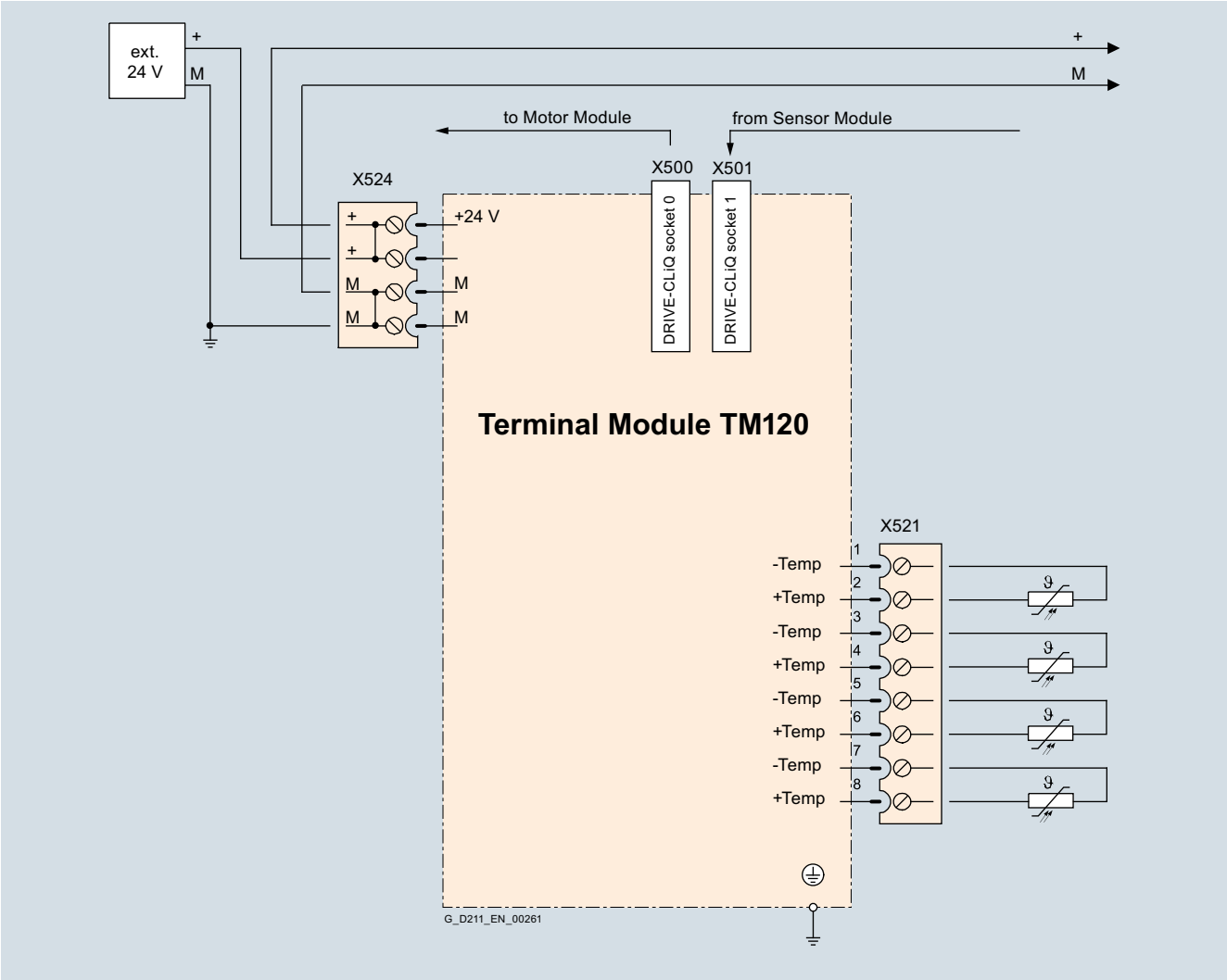

Example connection of TM120 Terminal Module

© Siemens AG 2017

Overview

TM150 Terminal Module

The TM150 Terminal Module is a DRIVE-CLiQ component for temperature evaluation. The temperature is measured in a temperature range from -99 °C to +250 °C (-146° F to +250° F) for the following temperature sensors:

- Pt100 (with monitoring for open-circuit and short-circuit)
- Pt1000 (with monitoring for wire breakage and short-circuit, can be used from firmware V4.7 HF17)
- KTY84 (with monitoring for open-circuit and short-circuit)
- PTC (with short-circuit monitoring)
- Bimetallic NC contact (without monitoring)

For the temperature sensor inputs, for each terminal block the evaluation can be parameterized for 1×2-wire, 2×2-wire, 3-wire or 4-wire. There is no galvanic isolation in the TM150 Terminal Module.

The temperature channels of a TM150 can be subdivided into 3 groups and evaluated together.

Design

The following are located on the TM150 Terminal Module:

- 6 ... 12 temperature sensor inputs
- 2 DRIVE-CLiQ sockets
- 1 connection for the electronics power supply via the 24 V DC supply connector
- 1 PE/protective conductor connection

The status of the TM150 Terminal Module is indicated via a multi-color LED.

The TM150 Terminal Module can be snapped onto a TH 35 standard mounting rail in accordance with EN 60715 (IEC 60715).

Selection and ordering data

Description	Article No.
TM150 Terminal Module Without DRIVE-CLiQ cable	**6SL3055-0AA00-3LA0**
Accessories for re-ordering	
Dust protection blanking plugs (50 units) For DRIVE-CLiQ port	**6SL3066-4CA00-0AA0**

Technical specifications

	TM150 Terminal Module 6SL3055-0AA00-3LA0
Current requirement, max. at 24 V DC	0.5 A
• Conductor cross section, max.	2.5 mm^2
• Fuse protection, max.	20 A
Temperature sensor inputs The inputs can be parameterized individually for the evaluation of sensors	
• Conductor cross section, max.	1.5 mm^2
• Measuring current per sensor, approx.	0.8 mA
Power loss	1.6 W
PE connection	M4 screw
Dimensions	
• Width	30 mm (1.18 in)
• Height	150 mm (5.91 in)
• Depth	111 mm (4.37 in)
Weight, approx.	0.41 kg (0.90 lb)

© Siemens AG 2017

Integration

The TM150 Terminal Module can communicate via DRIVE-CLiQ with the following Control Units.

- CU310-2 Control Unit
- CU320-2 Control Unit
- SINAMICS DCM Advanced CUD

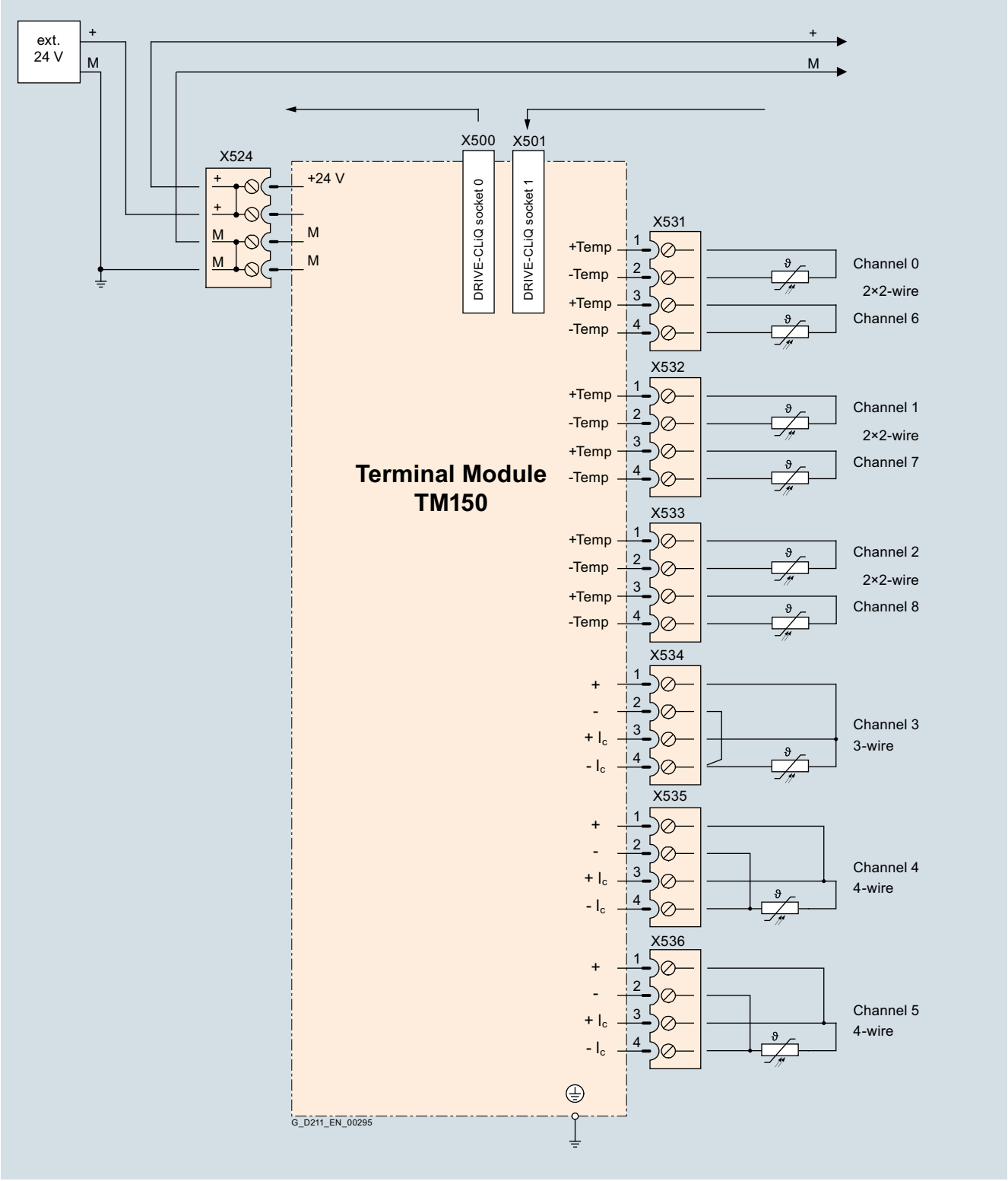

Connection example of TM150 Terminal Module

© Siemens AG 2017

Overview

VSM10 Voltage Sensing Module

The VSM10 Voltage Sensing Module is capable of measuring the line voltage waveform precisely and helps Line Modules to continue functioning properly under difficult supply conditions, for example, in the case of extreme voltage fluctuations or brief supply interruptions.

The VSM10 Voltage Sensing Module is integrated in Active Interface Modules in chassis format and Smart Line Modules in chassis format. It can be optionally deployed for all Active Line Modules in booksize format and for 16 kW and 36 kW Smart Line Modules.

Design

The VSM10 Voltage Sensing Module has the following connections and interfaces:

- 1 connection for direct line voltage sensing up to 690 V
- 1 connection for line voltage sensing via voltage transformers; maximum voltage 100 V
- 2 analog inputs (reserved for monitoring of resonance in the Active Interface Module in chassis format)
- 1 temperature sensor input for KTY84-130, Pt1000 or PTC (Pt1000 can be used from firmware V4.7 HF17)
- 1 DRIVE-CLiQ socket
- 1 connection for the electronics power supply via the 24 V DC power supply connector
- 1 PE (protective earth) connection

The status of the VSM10 Voltage Sensing Modules is indicated via a multi-color LED.

The VSM10 Voltage Sensing Module can be snapped onto a TH 35 DIN standard mounting rail in accordance with EN 60715 (IEC 60715).

Selection and ordering data

Description	Article No.
VSM10 Voltage Sensing Module Without DRIVE-CLiQ cable	**6SL3053-0AA00-3AA1**
Accessories for re-ordering	
Dust protection blanking plugs (50 units) For DRIVE-CLiQ port	**6SL3066-4CA00-0AA0**

Technical specifications

	VSM10 **Voltage Sensing Module** 6SL3053-0AA00-3AA1
Current requirement, max. at 24 V DC	0.2 A
• Conductor cross-section, max.	2.5 mm^2
Power loss, max.	10 W
Line voltage detection	
• Insulation resistance neutral point – ground when jumper is not inserted	>10 MΩ
• Input resistance	
- Terminal X521	>362 kΩ/phase
- Terminal X522	>2.5 MΩ/phase
Analog inputs (reserved for monitoring an Active Interface Module in chassis format)	
• Internal resistance, approx. (between differential inputs)	100 kΩ
• Resolution	12 bits + sign
PE connection	M4 screw
Dimensions	
• Width	50 mm (1.97 in)
• Height	151 mm (5.94 in)
• Depth	110 mm (4.33 in)
Weight, approx.	1 kg (2.21 lb)
Certificate of suitability	cULus

© Siemens AG 2017

Integration

The VSM10 Voltage Sensing Module can communicate with the following Control Units via DRIVE-CLiQ:

- CU320-2 Control Unit
- SINUMERIK Control Unit
- SIMOTION D Control Unit or Controller Extension

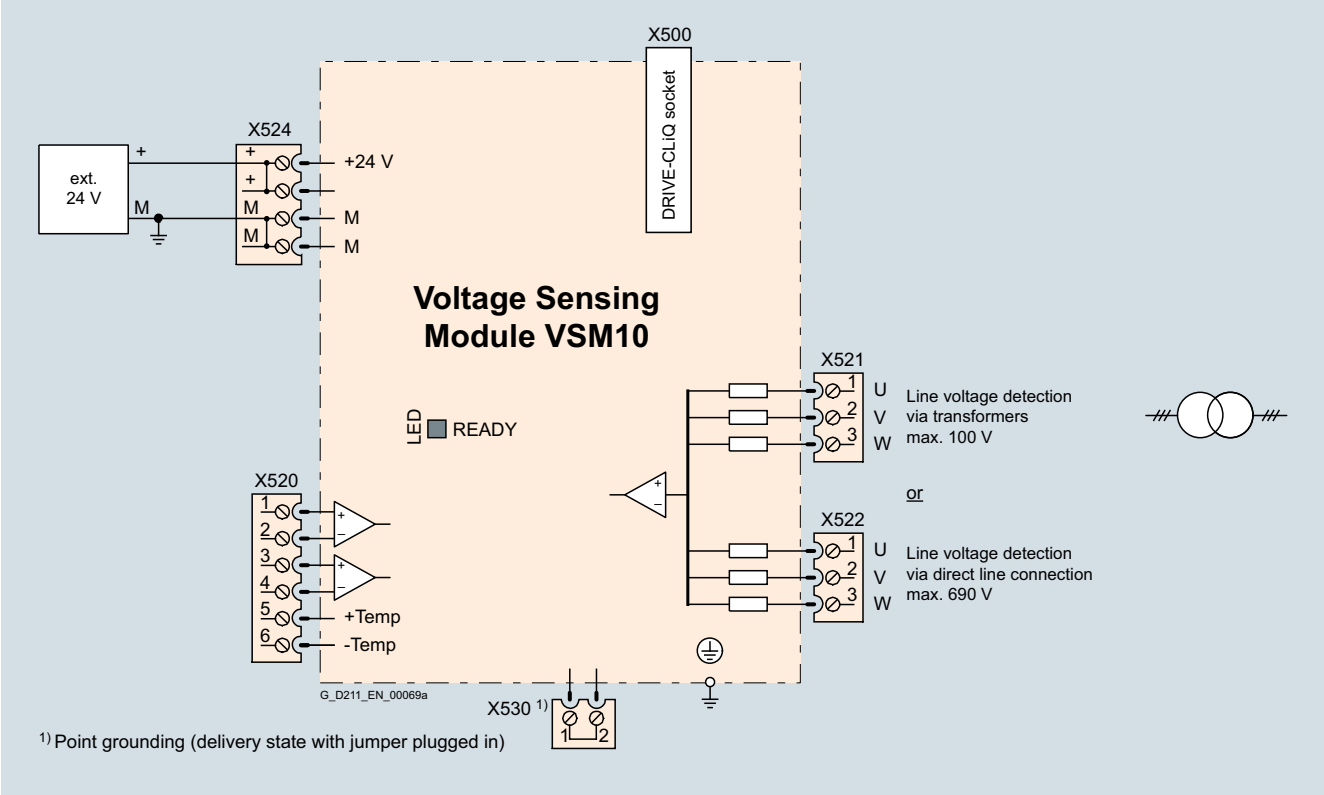

Connection example of VSM10 Voltage Sensing Module

© Siemens AG 2017

Overview

Motors with DRIVE-CLiQ interface

DRIVE-CLiQ is the preferred method for connecting the encoder systems to SINAMICS S120.

Motors with DRIVE-CLiQ interface are available for this purpose, e.g.

- SIMOTICS M-1PH8 and SIMOTICS S-1FT7/1FK7 synchronous motors
- SIMOTICS M-1PH8 asynchronous motors (induction motors)
- SIMOTICS T-1FW3 torque motors

Motors with a DRIVE-CLiQ interface can be directly connected to the associated Motor Module using MOTION-CONNECT DRIVE-CLiQ cables. The MOTION-CONNECT DRIVE-CLiQ cable connection at the motor has degree of protection IP67.

The DRIVE-CLiQ interface supplies the motor encoder via the integrated 24 V DC supply and transfers the motor encoder and temperature signals and the electronic rating plate data, e.g. a unique identification number and rated data (voltage, current, torque) to the Control Unit. This means that for the various encoder types – e.g. resolver or absolute encoder – different encoder cables with varying permissible lengths are no longer required; just one cable type, MOTION-CONNECT DRIVE-CLiQ with varying permissible lengths, can be used for all encoders.

These motors simplify commissioning and diagnostics, as the motor and encoder type are identified automatically.

Motors without DRIVE-CLiQ interface

The encoder and temperature signals of motors without DRIVE-CLiQ interface, as well as those of external encoders, must be connected via Sensor Modules. Sensor Modules Cabinet-Mounted are available in degree of protection IP20 for control cabinet installation, as well as Sensor Modules External-Mounted (degree of protection IP67).

Only one encoder system can be connected to each Sensor Module.

More information

Motor encoder and temperature signals must be connected when possible to the corresponding Motor Module or Power Module and external encoders to the Control Unit. However, the DRIVE-CLiQ connections can also be bundled via DRIVE-CLiQ Hub Modules.

Safety Integrated

The Safety Integrated Extended Functions of the SINAMICS S120 drive system require suitable encoders (see section SIMOTICS servomotors).

Motors driving a load via a belt

Unfavorable material combinations generate static electricity between the belt pulley and the belt. Electrostatic charging must be prevented, since this can discharge via the motor shaft and the encoder, thereby causing disturbances in the encoder signals. One countermeasure is to manufacture belts out of an antistatic material, for example.

© Siemens AG 2017

Overview

SMC10 Sensor Module Cabinet-Mounted

The SMC10 Sensor Module Cabinet-Mounted is required to evaluate the encoder signals of motors without a DRIVE-CLiQ interface. External encoders can also be connected via the SMC10.

The following encoder signals can be evaluated:

- 2-pole resolver
- Multi-pole resolver

Design

The SMC10 Sensor Module Cabinet-Mounted features the following connections and interfaces as standard:

- 1 encoder connection including motor temperature sensing (KTY84-130, Pt1000 or PTC) via SUB-D connector
- 1 DRIVE-CLiQ interface
- 1 connection for the electronics power supply via the 24 V DC supply connector
- 1 PE (protective earth) connection

The status of the SMC10 Sensor Module Cabinet-Mounted is indicated via a multi-color LED.

The SMC10 Sensor Module Cabinet-Mounted can be snapped onto a TH 35 standard mounting rail according to EN 60715 (IEC 60715).

The signal cable shield is connected via the encoder system connector and can also be connected to the SMC10 Sensor Module Cabinet-Mounted via a shield connection terminal, e.g. Phoenix Contact type SK8 or Weidmüller type KLBÜ CO 1. The shield connection terminal must not be used as a strain relief mechanism.

Integration

SMC10 Sensor Modules Cabinet-Mounted communicate with a Control Unit via DRIVE-CLiQ.

Selection and ordering data

Description	Article No.
SMC10 Sensor Module Cabinet-Mounted Without DRIVE-CLiQ cable	**6SL3055-0AA00-5AA3**
Accessories for re-ordering	
Dust protection blanking plugs (50 units) For DRIVE-CLiQ port	**6SL3066-4CA00-0AA0**

Technical specifications

	SMC10 Sensor Module Cabinet-Mounted 6SL3055-0AA00-5AA3
Current requirement, max. at 24 V DC, without taking encoder into account	0.2 A
• Conductor cross-section, max.	2.5 mm^2
• Fuse protection, max.	20 A
Power loss, max.	10 W
Encoders which can be evaluated	• 2-pole resolvers • Multi-pole resolver
• Excitation voltage, rms	4.1 V
• Excitation frequency	5 ... 16 kHz depending on the current controller clock cycle of the Motor Module or Power Module
• Transformation ratio	0.5
• Encoder frequency, max.	2 kHz (120000 rpm) depending on the number of resolver pole pairs and current controller clock cycle of the Motor Module or Power Module
• Signal subdivision (interpolation), max.	16384 times (14 bits)
• Cable length to encoder, max.	130 m (426 ft)
PE connection	M4 screw
Dimensions	
• Width	30 mm (1.18 in)
• Height	150 mm (5.91 in)
• Depth	111 mm (4.37 in)
Weight, approx.	0.45 kg (0.99 lb)
Certificate of suitability	cULus

© Siemens AG 2017

Overview

SMC20 Sensor Module Cabinet-Mounted

The SMC20 Sensor Module Cabinet-Mounted is required to evaluate the encoder signals of motors without a DRIVE-CLiQ interface. External encoders can also be connected via the SMC20.

The following encoder signals can be evaluated:

- Incremental encoder sin/cos 1 V_{pp}
- Absolute encoder EnDat 2.1
- SSI encoder with incremental signals sin/cos 1 V_{pp} (firmware version 2.4 and later)

The motor temperature can also be sensed using a PTC thermistor KTY84-130, Pt1000 or PTC.

Design

The SMC20 Sensor Module Cabinet-Mounted features the following connections and interfaces as standard:

- 1 encoder connection including motor temperature sensing (KTY84-130, Pt1000 or PTC) via SUB-D connector
- 1 DRIVE-CLiQ interface
- 1 connection for the electronics power supply via the 24 V DC supply connector
- 1 PE (protective earth) connection

The status of the SMC20 Sensor Module Cabinet-Mounted is indicated via a multi-color LED.

The SMC20 Sensor Module Cabinet-Mounted can be snapped onto a TH 35 standard mounting rail in accordance with EN 60715 (IEC 60715).

The signal cable shield is connected via the encoder system connector and can also be connected to the SMC20 Sensor Module Cabinet-Mounted via a shield connection terminal, e.g. Phoenix Contact type SK8 or Weidmüller type KLBÜ CO 1. The shield connection terminal must not be used as a strain relief mechanism.

Integration

SMC20 Sensor Modules Cabinet-Mounted communicate with a Control Unit via DRIVE-CLiQ.

Selection and ordering data

Description	Article No.
SMC20 Sensor Module Cabinet-Mounted Without DRIVE-CLiQ cable	**6SL3055-0AA00-5BA3**
Accessories for re-ordering	
Dust protection blanking plugs (50 units) For DRIVE-CLiQ port	**6SL3066-4CA00-0AA0**

Technical specifications

	SMC20 Sensor Module Cabinet-Mounted 6SL3055-0AA00-5BA3
Current requirement, max. at 24 V DC, without taking encoder into account	0.2 A
• Conductor cross-section, max.	2.5 mm^2
• Fuse protection, max.	20 A
Power loss, max.	10 W
Encoders which can be evaluated	• Incremental encoder sin/cos 1 V_{pp} • Absolute encoder EnDat 2.1 • SSI encoder with incremental signals sin/cos 1 V_{pp} (firmware version 2.4 and later)
• Encoder supply	5 V DC/0.35 A
• Encoder frequency incremental signals, max.	500 kHz
• Signal subdivision (interpolation), max.	16384 times (14 bits)
• SSI baud rate	100 ... 1000 kBaud
• Cable length to encoder, max.	100 m (328 ft)
PE connection	M4 screw
Dimensions	
• Width	30 mm (1.18 in)
• Height	150 mm (5.91 in)
• Depth	111 mm (4.37 in)
Weight, approx.	0.45 kg (0.99 lb)
Certificate of suitability	cULus

© Siemens AG 2017

Overview

SMC30 Sensor Module Cabinet-Mounted

The SMC30 Sensor Module Cabinet-Mounted is required to evaluate the encoder signals of motors without a DRIVE-CLiQ interface. External encoders can also be connected via the SMC30.

The following encoder signals can be evaluated:

- Incremental encoders TTL/HTL with/without open-circuit detection (open-circuit detection is only available with bipolar signals)
- SSI encoder with TTL/HTL incremental signals
- SSI encoder without incremental signals

The motor temperature can also be sensed using a PTC thermistor KTY84-130, Pt1000 or PTC.

Design

The SMC30 Sensor Module Cabinet-Mounted features the following connections and interfaces as standard:

- 1 encoder connection including motor temperature sensing (KTY84-130, Pt1000 or PTC) either via D-sub connector or via terminals
- 1 DRIVE-CLiQ interface
- 1 connection for the electronics power supply via the 24 V DC supply connector
- 1 PE (protective earth) connection

The status of the SMC30 Sensor Module Cabinet-Mounted is indicated via a multi-color LED.

The SMC30 Sensor Module Cabinet-Mounted can be snapped onto a TH 35 standard mounting rail in accordance with EN 60715 (IEC 60715).

The maximum encoder cable length between SMC30 modules and encoders is 100 m (328 ft).. For HTL encoders, this length can be increased to 300 m (984 ft) if the A+/A- and B+/B- signals are evaluated and the power supply cable has a minimum cross-section of 0.5 mm^2.

The signal cable shield can be connected to the SMC30 Sensor Module Cabinet-Mounted via a shield connection terminal, e.g., Phoenix Contact type SK8 or Weidmüller type KLBÜ CO 1. The shield connection terminal must not be used as a strain relief mechanism.

Integration

SMC30 Sensor Modules Cabinet-Mounted communicate with a Control Unit via DRIVE-CLiQ.

Selection and ordering data

Description	Article No.
SMC30 Sensor Module Cabinet-Mounted Without DRIVE-CLiQ cable	**6SL3055-0AA00-5CA2**
Accessories for re-ordering	
Dust protection blanking plugs (50 units) For DRIVE-CLiQ port	**6SL3066-4CA00-0AA0**

Technical specifications

	SMC30 Sensor Module Cabinet-Mounted 6SL3055-0AA00-5CA2
Current requirement, max. at 24 V DC, without taking encoder into account	0.2 A
• Conductor cross-section, max.	2.5 mm^2
• Fuse protection, max.	20 A
Power loss, max.	10 W
Encoders which can be evaluated	• Incremental encoder TTL/HTL • SSI encoder with TTL/HTL incremental signals • SSI encoder without incremental signals
• Input impedance	
- TTL	570 Ω
- HTL, max.	16 mA
• Encoder supply	24 V DC/0.35 A or 5 V DC/0.35 A
• Encoder frequency, max.	300 kHz
• SSI baud rate	100 ... 1000 kBaud
• Limiting frequency	300 kHz
• Resolution absolute position SSI	30 bits
• Cable length, max.	
- TTL encoder	100 m (328 ft) (only bipolar signals permitted)[1]
- HTL encoder	100 m (328 ft) for unipolar signals 300 m (984 ft) for bipolar signals[1]
- SSI encoder	100 m (328 ft)
PE connection	M4 screw
Dimensions	
• Width	30 mm (1.18 in)
• Height	150 mm (5.91 in)
• Depth	111 mm (4.37 in)
Weight, approx.	0.45 kg (0.99 lb)
Certificate of suitability	cULus

[1] Signal cables twisted in pairs and shielded.

© Siemens AG 2017

Overview

SME20/SME25 Sensor Module External

SME20/SME25 Sensor Modules External are encoder evaluation units for machine encoders (direct measuring systems).
The devices are designed with IP67 degree of protection. This means that the units can be installed outside the control cabinet near the machine encoder.

The following encoder signals can be evaluated:

- Incremental encoder sin/cos 1 V_{pp} without rotor position track (C and D tracks)
- Absolute encoder EnDat 2.1
- SSI absolute encoder [1] with incremental signals sin/cos 1 V_{pp} (firmware V2.4 and later)

Using adapter cable 6FX8002-2CA88-..., it is possible to connect a motor with a 17-pole circular encoder connector to the 12-pole circular connector of the SME20.

- KTY/Pt1000/PTC temperature sensors can be used to evaluate the motor temperature (only possible with SME20).
- The Sensor Module is only suitable for motors without absolute track signals (C and D tracks), e.g.:
  - Synchronous motors with pole position identification (SIMOTICS L-1FN/T-1FW/M-1FE)
  - Asynchronous motors (induction motors) (SIMOTICS M-1PH)

SME20/SME25 Sensor Modules External evaluate the encoder signals and convert the information obtained to DRIVE-CLiQ. Neither motor nor encoder data are saved in the SME20/SME25.

Design

SME20/SME25 Sensor Modules External feature the following connections and interfaces as standard:

- 1 encoder connector via circular plug
- 1 DRIVE-CLiQ interface with integrated 24 V DC electronics power supply from the Control Unit or Motor Module
- 1 PE (protective earth) connection

Integration

SME20/SME25 Sensor Modules External communicate with a Control Unit via DRIVE-CLiQ.

Selection and ordering data

Description	Article No.
SME20 Sensor Module External For incremental measuring systems Without DRIVE-CLiQ cable	**6SL3055-0AA00-5EA3**
SME25 Sensor Module External For absolute measuring systems Without DRIVE-CLiQ cable	**6SL3055-0AA00-5HA3**
Accessories	
Adapter cable [2] For SME20, for connecting motors with 17-pole encoder connector, with encoders, without C and D tracks	**6FX8002-2CA88-....**

[1] For SME25, only encoders with 5 V supply voltage.
[2] For length code, see section MOTION-CONNECT connection systems.

© Siemens AG 2017

Technical specifications

		SME20 Sensor Module External 6SL3055-0AA00-5EA3	**SME25 Sensor Module External** 6SL3055-0AA00-5HA3
Encoder		• Incremental encoder sin/cos 1 V_{pp} with 5 V power supply 0.35 A	• Absolute encoder EnDat 2.1 with 5 V voltage supply 0.35 A • Absolute encoder SSI with incremental signals sin/cos 1 V_{pp} with 5 V voltage supply 0.35 A
Signal subdivision (interpolation)		≤16384 × (14 bits)	≤16384 × (14 bits)
Max. encoder frequency that can be evaluated	kHz	≤500	≤500
SSI/EnDat 2.1 baud rate	kHz	–	100
Measuring system interface		12-pin M23 circular connector	17-pin M23 circular connector
Outlet		IP67 DRIVE-CLiQ connector	IP67 DRIVE-CLiQ connector
Current requirement, max. At 24 V DC, not taking encoder into account	A	0.11	0.11
• Conductor cross-section		Acc. to connector contacts	Acc. to connector contacts
• Protection		Via DRIVE-CLiQ power supply source	Via DRIVE-CLiQ power supply source
Power loss, max.	W	4	4
PE connection		M4 screw/1.8 Nm	M4 screw/1.8 Nm
Cable length, max.			
• To measuring system [1]	m (ft)	3 (9.84)	3 (9.84)
• To automatic speed control	m (ft)	100 (328)	100 (328)
Degree of protection		IP67	IP67
Dimensions			
• Width	mm (in)	58 (2.28)	58 (2.28)
• Height	mm (in)	44 (1.73)	44 (1.73)
• Depth	mm (in)	112 (4.41)	112 (4.41)
Weight, approx.	kg (lb)	0.31 (0.68)	0.31 (0.68)
Certificate of suitability		cULus	cULus

[1] The maximum cable length at the encoder system interface depends on the current drawn by the encoder system and the cross-section of the supply conductors in the cable, however, a maximum of 10 m (32.8 ft) (for detailed information, see Manual SINAMICS S120 Control Units).

© Siemens AG 2017

Overview

SME120/SME125 Sensor Module External

The SME120/SME125 Sensor Modules External are encoder evaluation units with degree of protection IP67, especially suitable for use in linear and torque motor applications. They can be installed close to the motor systems and encoders in the machine.

Sensor Modules External evaluate the encoder signals and motor temperature sensors specifically and convert the information obtained for DRIVE-CLiQ. The motor temperature signals are safely electrically separated.

A Hall-effect sensor box can be connected for the SME120 to determine the commutation position of a linear motor.

Neither motor nor encoder data are saved in the SME120/SME125.

The SME120 and SME125 can be operated on Control Units with firmware release V2.4 and later.

The following encoder signals can be evaluated depending on the type of Sensor Module:

- Incremental encoder sin/cos 1 V_{pp}
- Absolute encoder EnDat 2.1
- SSI absolute encoder [1] with sin/cos 1 V_{pp} incremental signals, but without reference signal

The motor temperature can also be measured using KTY84-130, Pt1000 or PTC thermistors.

Design

SME120/SME125 Sensor Modules External feature the following connections and interfaces as standard:

- 1 encoder connection via circular connector
- 1 temperature sensor connection via circular connector
- 1 Hall-effect sensor connection via circular connector (SME120 only)
- 1 DRIVE-CLiQ interface with integrated 24 V DC electronics power supply from the Control Unit or Motor Module
- 1 PE (protective earth) connection

Selection and ordering data

Description	Article No.
SME120 Sensor Module External For incremental measuring systems Without DRIVE-CLiQ cable	**6SL3055-0AA00-5JA3**
SME125 Sensor Module External For absolute measuring systems Without DRIVE-CLiQ cable	**6SL3055-0AA00-5KA3**
Accessories	
Connector for temperature sensor input (connector kits, 6+1-pole)	**6FX2003-0SU07**
Connector for Hall sensor input (connector kits, 9-pole)	**6FX2003-0SU01**
Connector for SME120 encoder system interface (connector kits, 12-pole)	**6FX2003-0SA12**
Connector for SME125 encoder system interface (connector kits, 17-pole)	**6FX2003-0SA17**

[1] For SME125, only SSI encoders with 5 V supply voltage.

[2] For length code, see section MOTION-CONNECT connection systems.

© Siemens AG 2017

Technical specifications

		SME120 Sensor Module External 6SL3055-0AA00-5JA3	**SME125 Sensor Module External** 6SL3055-0AA00-5KA3
Encoder		• Incremental encoder sin/cos 1 V_{pp} with 5 V power supply	• Absolute encoder EnDat 2.1 with 5 V voltage supply • Absolute encoder SSI with incremental signals sin/cos 1 V_{pp} with 5-V voltage supply
Signal subdivision (interpolation)		≤16384 × (14 bits)	≤16384 × (14 bits)
Max. encoder frequency that can be evaluated	kHz	≤500	≤500
SSI/EnDat 2.1 baud rate	kHz	–	100
Measuring system interface		12-pin M23 circular connector	17-pin M23 circular connector
Temperature sensor input		6-pin M17 circular connector	6-pin M17 circular connector
Hall-effect sensor input		9-pin M23 circular connector	–
Output		IP67 DRIVE-CLiQ connector	IP67 DRIVE-CLiQ connector
Current requirement, max. at 24 V DC, without taking encoder into account	A	0.16	0.16
• Current carrying capacity of the encoder supply, for measuring system (at 5 V DC) and, where applicable, including hall effect sensor box	A	0.35	0.35
• Conductor cross-section		Acc. to connector contacts	Acc. to connector contacts
• Protection		Via DRIVE-CLiQ power supply source	Via DRIVE-CLiQ power supply source
Power loss, max.	W	4.5	4.5
PE connection		M4 screw/1.8 Nm	M4 screw/1.8 Nm
Cable length, max.			
• To measuring system [1]/temperature sensor	m (ft)	3 (9.84)	3 (9.84)
• To automatic speed control	m (ft)	100 (328)	100 (328)
Degree of protection		IP67	IP67
Dimensions			
• Width	mm (in)	117.6 (4.63)	117.6 (4.63)
• Height	mm (in)	43.1 (1.70)	43.1 (1.70)
• Depth	mm (in)	127 (5)	127 (5)
Weight, approx.	kg (lb)	0.7 (1.54)	0.7 (1.54)
Certificate of suitability		cULus	cULus

[1] The maximum cable length at the encoder system interface depends on the current drawn by the encoder system and the cross-section of the supply conductors in the cable, however, a maximum of 10 m (32.8 ft) (for detailed information, see Manual SINAMICS S120 Control Units).

© Siemens AG 2017

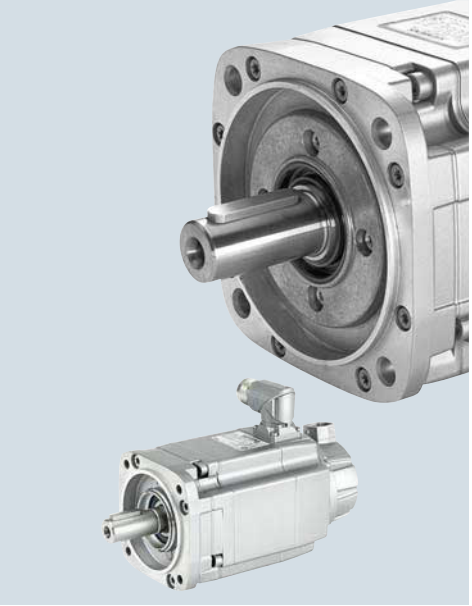

8/2 **Overview**

8/4 **Technical definitions for AC motors**

8/14 **SIMOTICS S synchronous motors for SINAMICS S120**
8/14 SIMOTICS S-1FT7
8/16 Compact core type – Natural cooling
8/18 Compact – Natural cooling
8/24 Compact – Forced ventilation
8/26 Compact – Water cooling
8/30 High Dynamic – Forced ventilation/ Water cooling
8/32 SIMOTICS S-1FK7
8/36 Compact – Natural cooling
8/42 High Dynamic – Natural cooling
8/44 High Inertia – Natural cooling
8/46 Compact for Power Modules 230 V 1 AC
8/50 High Dynamic for Power Modules 230 V 1 AC
8/52 Built-in holding brakes for SIMOTICS S-1FT7/S-1FK7 motors

8/53 **SIMOTICS S geared motors for SINAMICS S120**
8/53 Planetary gearbox series SP+ for SIMOTICS S-1FT7
8/58 Planetary gearbox series SP+ for SIMOTICS S-1FK7
8/64 Planetary gearbox series LP+ for SIMOTICS S-1FK7

8/66 **Dimensional drawings**
8/66 SIMOTICS S-1FT7
8/72 SIMOTICS S-1FK7
8/77 Planetary gearbox

Chap. 13 **Drive Technology Configurator**
Product selection tool
www.siemens.com/dt-configurator

Chap. 13 **SIZER for Siemens Drives**
Engineering tool
www.siemens.com/sizer

Chap. 13 **CAD CREATOR**
Dimensional drawing and 2D/3D CAD generator
www.siemens.com/cadcreator

© Siemens AG 2017

Motor type		Features	Degree of protection	Type of cooling
SIMOTICS S servomotors – permanent-magnet				
	SIMOTICS S-1FT7 Compact	Compact Very high power density	IP64 [1] (optional IP65, IP67)	Natural cooling Forced ventilation Water cooling
	SIMOTICS S-1FT7 High Dynamic	High Dynamic Very low rotor moment of inertia	IP64 (optional IP65, IP67)	Forced ventilation Water cooling
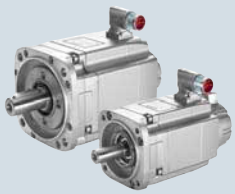	**SIMOTICS S-1FK7** Compact Compact for Power Modules 230 V 1 AC	Compact High power density	IP64 (optional IP65)	Natural cooling
	SIMOTICS S-1FK7 High Dynamic High Dynamic for Power Modules 230 V 1 AC	High Dynamic Very low rotor moment of inertia	IP64 (optional IP65)	Natural cooling
	SIMOTICS S-1FK7 High Inertia	High Inertia High or variable load moment of inertia	IP64 (optional IP65)	Natural cooling

8

SIMOTICS S servomotors

The potential applications for SIMOTICS S-1FT7/S-1FK7 motors are extremely diverse.

On machine tools, they are designated and used as feed motors.

On production machines, e.g., printing, packaging and textile machines, they are designated as synchronous servomotors.

Core types can be supplied for certain motor types. These core types can be express delivered as replacement motors in the event of plant outages and offer the advantage of a quicker spare parts supply. For this reason, core types should be used for configuration wherever possible.

The selection and ordering data for the SINAMICS S120 Motor Modules are based on the booksize format by way of example. Other formats are also possible. The SIZER for Siemens Drives engineering tool is available for detailed configuration

[1] Core type: IP65.

© Siemens AG 2017

Shaft height	Rated power P_{rated} for duty type S1 kW (hp)	Rated torque M_{rated}	Selection and ordering data
	0.01 0.1 1 10 100 1000 10000		Page
SH 36/SH 48/SH 63/ SH 80/SH 100/SH 132	0.88 (1.18) – 17 (22.8)	1.4 ... 108 Nm (12.4 ... 956 lb_f-in)	**8/16**
SH 80/SH 100	5 (6.71) – 18.8 (25.2)	21 ... 73 Nm (186 ... 646 lb_f-in)	
SH 63/SH 80/SH 100	3.1 (4.16) – 34.2 (45.9)	9.2 ... 125 Nm (81.4 ... 1106 lb_f-in)	
SH 63/SH 80	3.8 (5.10) – 10.8 (14.5)	11 ... 33 Nm (97.4 ... 292 lb_f-in)	**8/30**
SH 63/SH 80	5.7 (7.64) – 21.7 (29.1)	16.5 ... 51 Nm (146 ... 451 lb_f-in)	
SH 20/SH 28/SH 36/ SH 48/SH 63/SH 80/ SH 100	0.05 (0.07) – 8.2 (11.0)	0.08 ... 37 Nm (0.71 ... 327 lb_f-in)	**8/36**
SH 20/SH 28/SH 36/ SH 48	0.05 (0.07) – 0.8 (1.07)	0.08 … 2.6 Nm (0.71 ... 23 lb_f-in)	**8/46**
SH 36/SH 48/SH 63/ SH 80	0.6 (0.80) – 3.8 (5.10)	0.9 ... 18 Nm (8.0 ... 159 lb_f-in)	**8/42**
SH 36/SH 48	0.4 (0.54) – 0.9 (1.21)	1.2 ... 3 Nm (10.6 ... 26.6 lb_f-in)	**8/50**
SH 48/SH 63/SH 80/ SH 100	0.9 (1.21) – 7.7 (10.3)	1.5 ... 37 Nm (13.3 ... 327 lb_f-in)	**8/44**

© Siemens AG 2017

Overview

Regulations, standards, and specifications

The motors comply with the appropriate standards and regulations, see table below.

As a result of the fact that in many countries the national regulations have been harmonized with the international IEC 60034-1 recommendation, there are no longer any differences with respect to coolant temperatures, temperature classes, and temperature rise limits

General specifications for rotating electrical machines	IEC 60034-1
Terminal designations and direction of rotation for electrical machines	IEC 60034-8
Types of construction of rotating electrical machines	IEC 60034-7
Cooling methods of rotating electrical machines	IEC 60034-6
Degrees of protection of rotating electrical machines	IEC 60034-5
Vibration severity of rotating electrical machines	IEC 60034-14
Noise limit values for rotating electrical machines	IEC 60034-9
Cylindrical shaft extensions for electric machines	DIN 748 Part 3/ DIN IEC 60072

The motors listed below are UL-approved by Underwriters Laboratories Inc. and also comply with Canadian cUR standards: SIMOTICS S-1FK7/S-1FT7/SIMOTICS T-1FW3/ S-1FW6/SIMOTICS M-1PH8 (without brake)/SIMOTICS L-1FN3.

Degrees of protection for AC motors

A suitable degree of protection must be selected depending on the operating and environmental conditions to protect the machine against:

- Ingress of water, dust, and solid foreign objects,
- Contact with rotating parts inside a motor, and
- Contact with live parts.

Degrees of protection of electric motors are specified by a code. This comprises 2 letters, 2 digits and, if required, an additional letter.

IP (International Protection)
Code letter designating the degree of protection against contact and the ingress of solid foreign objects and water

0 to **6**
1st digit designating the degree of touch protection and protection against ingress of solid foreign objects

0 to **8**
2nd digit designating the degree of protection against ingress of water (no oil protection)

W, S and **M**
Additional code letters for special degrees of protection

Most motors are supplied with the following degrees of protection:

Motor	Degree of protection	1st digit: Touch protection	Protection against foreign objects	2nd digit: Protection against water
Internally cooled	**IP23**	Protection against finger contact	Protection against medium-sized, solid foreign objects above 12 mm Ø	Protection against spray water up to 60° from the vertical
Surface-cooled	**IP54**	Complete protection against accidental contact	Protection against damaging dust deposits	Splash water from any direction
	IP55			Jet water from any direction
	IP64	Complete protection against accidental contact	Protection against ingress of dust	Splash water from any direction
	IP65 [1]			Jet water from any direction
	IP67 [1]			Motor under specified pressure and time conditions under water

Recommended degrees of protection for AC motors

When cooling lubricants are used, protection against water alone is inadequate. The IP rating should only be considered as a guideline in this case. The motors may have to be protected by suitable covers. Attention must be paid to providing suitable sealing of the motor shaft for the selected degree of protection for the motor (for 1FT7: degree of protection IP67).

The table can serve as a decision aid for selecting the proper degree of protection for motors. With mounting position IM V3/ IM V19/IM V6/IM V35 with shaft extension facing upwards, a permanent covering of liquid on the flange must be avoided. With a mounting position with the shaft extension facing upwards, liquid remaining on the motor flange can be avoided by selecting a 1FT7 motor with degree of protection IP67 and a recessed flange.

Effect \ Liquids	General workshop environment	Water; general cooling lubricant (95% water, 5% oil)
Dry	IP64	–
Liquid-enriched environment	–	IP64
Mist	–	IP65
Spray	–	IP65
Jet	–	IP67
Splash/brief immersion/ constant inundation	–	IP67

[1] DIN VDE 0530 Part 5 or EN 60034 Part 5 specifies that there are only 5 degrees of protection for the first digit code and 8 degrees of protection for the second digit code in relation to rotating electrical machinery. However, IP6 is included in DIN 40050, which generally applies to electrical equipment.

© Siemens AG 2017

Overview (continued)

Types of construction/mounting positions	Types of construction/mounting positions
IM B3	**IM B6**
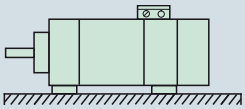	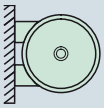
IM B7	**IM B8**
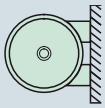	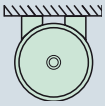
IM V6	**IM V5**
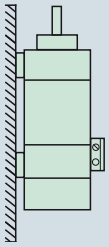	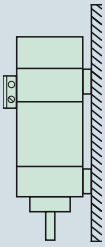
IM V35 [1]	**IM V15** [1]
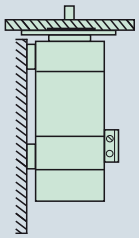	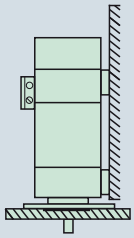
IM B35 [1]	**IM B5, IM B 14**
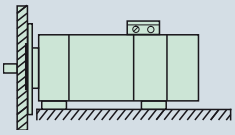	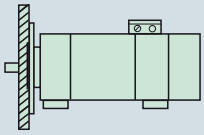
IM V3, IM V19	**IM V1, IM V18**
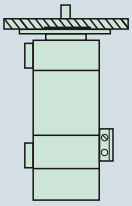	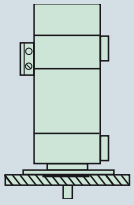

[1] Fixing on the flange and feet is necessary.

© Siemens AG 2017

Overview (continued)

Radial eccentricity tolerance of shaft in relation to housing axis

referred to cylindrical shaft extensions

Shaft height SH	Tolerance N mm (in)	Tolerance R mm (in)	Tolerance SPECIAL mm (in)
28/36	0.035 (0.00138)	0.018 (0.00071)	–
48/63	0.04 (0.00157)	0.021 (0.00083)	–
80/100/132	0.05 (0.00197)	0.025 (0.00098)	0.01 (0.00039)
160/180/225	0.06 (0.00236)	0.03 (0.00118)	0.01/–/– (0.00039)/–/–
280	0.07 (0.00276)	0.035 (0.00138)	–
355	0.08 (0.00315)	0.04 (0.00157)	–

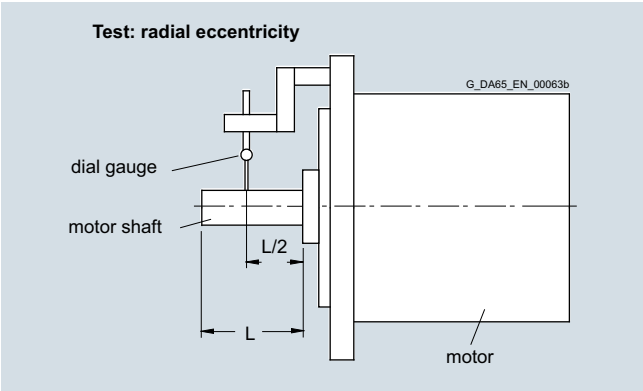

Concentricity and axial eccentricity tolerance of the flange surface relative to the shaft axis

(referred to the centering diameter of the mounting flange)

Shaft height SH	Tolerance N mm (in)	Tolerance R mm (in)	Tolerance SPECIAL mm (in)
28/36/48	0.08 (0.00315)	0.04 (0.00157)	–
63/80/100	0.1 (0.00394)	0.05 (0.00197)	–/0.03/0.04 –/(0.00118/0.00157)
132/160/180/225	0.125 (0.00492)	0.063 (0.00248)	0.04/0.04/– (0.00157/0.00157)/–
280/355	0.16 (0.00630)	0.08 (0.00315)	–

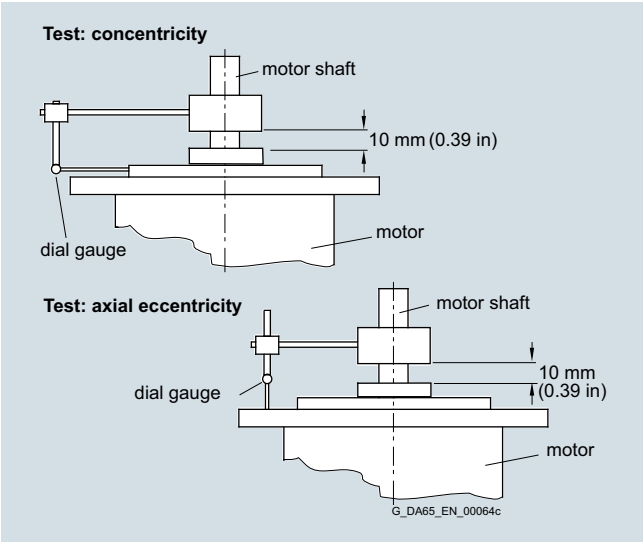

Vibration severity and vibration severity grade A in accordance with IEC 60034-14

The vibration severity is the RMS value of the vibration velocity (frequency range from 10 to 1000 Hz). The vibration severity is measured using electrical measuring instruments in compliance with DIN 45666.

The values indicated refer only to the motor. These values can increase as a result of the overall system vibrational behavior due to installation.

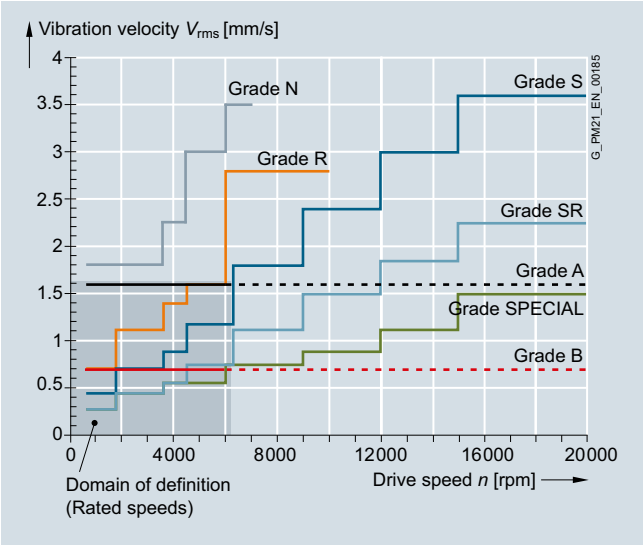

Vibration severity limit values for shaft heights 20 to 132

The speeds of 1800 rpm and 3600 rpm and the associated limit values are defined in accordance with IEC 60034-14. The speeds of 4500 rpm and 6000 rpm and the specified values are defined by the motor manufacturer.

The motors maintain vibration severity grade A up to rated speed.

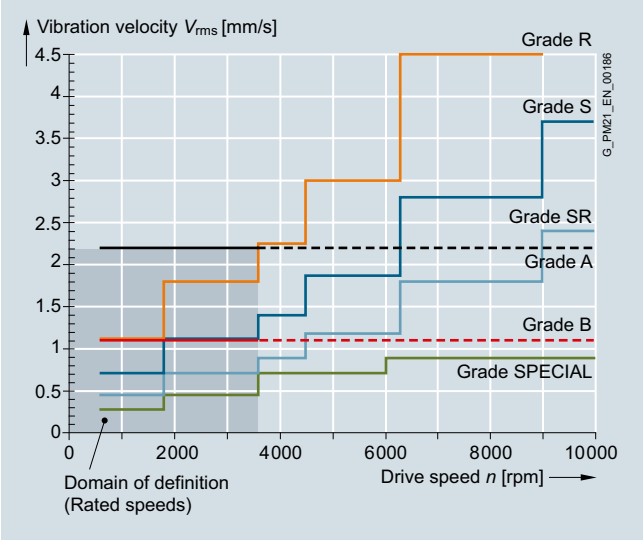

Vibration severity limit values for shaft heights 160 to 280

© Siemens AG 2017

Overview (continued)

Balancing according to DIN ISO 8821

In addition to the balance quality of the motor, the vibration quality of motors with mounted belt pulleys and coupling is essentially determined by the balance quality of the mounted component.

If the motor and mounted component are separately balanced before they are assembled, then the process used to balance the belt pulley or coupling must be adapted to the motor balancing type. The following different balancing methods are used on motors of types SIMOTICS M-1PH8:

- Half-key balancing
- Full-key balancing
- Plain shaft extension

The letter H (half key) or F (full key) is printed on the shaft extension face to identify a half-key balanced or a full-key balanced SIMOTICS M-1PH8 motor.

SIMOTICS S-1FT7/S-1FK7 motors with feather key are always half-key balanced.

In general, motors with a plain shaft are recommended for systems with the most stringent vibrational quality requirements. For full-key balanced motors, we recommend belt pulleys with two opposite keyways, but only one feather key in the shaft extension.

Vibration stress, immitted vibration values

The following maximum permissible vibration stress limits at full reliability performance apply only to SIMOTICS S-1FT7/1FK7 permanent-magnet servomotors.

Vibration stress according to DIN ISO 10816:

Vibration frequency	Vibration values for 1FT7/1FK7 (naturally cooled and water-cooled)	
10 ... 2000 Hz	Vibration velocity V_{rms}	≤ 4.5 mm/s (0.18 in/s)
	Vibration acceleration *a* axial	≤ 25 m/s^2 (82.0 ft/s^2)
	Vibration acceleration *a* radial	≤ 50 m/s^2 (164.0 ft/s^2)

For motors with forced ventilation, the limit values for axial and radial acceleration are limited to 10 m/s^2 (32.8 ft/s^2)

For all main motors of type SIMOTICS M-1PH8, the following limits are valid for (immitted) vibration values introduced into the motor from outside:

Vibration frequency	Vibration values for 1PH808/1PH810/1PH813/1PH816	
< 6.3 Hz	Vibration displacement s	≤ 0.16 mm (0.006 in)
6.3 ... 250 Hz	Vibration velocity V_{rms}	≤ 4.5 mm/s (0.18 in/s)
> 250 Hz	Vibration acceleration *a*	≤ 10 m/s^2 (32.8 ft/s^2)

Vibration frequency	Vibration values for 1PH818/1PH822/1PH828	
< 6.3 Hz	Vibration displacement *s*	≤ 0.26 mm (0.010 in)
6.3 ... 63 Hz	Vibration velocity V_{rms}	≤ 7.1 mm/s (0.28 in/s)
> 63 Hz	Vibration acceleration *a*	≤ 4.0 m/s^2 (13.12 ft/s^2)

For all torque motors of type SIMOTICS T-1FW3, the following limits are valid for (immitted) vibration values introduced into the motor from outside:

Vibration frequency	Vibration values for 1FW3	
< 6.3 Hz	Vibration displacement *s*	≤ 0.26 mm (0.010 in)
6.3 ... 63 Hz	Vibration velocity V_{rms}	≤ 7.1 mm/s (0.28 in/s)
> 63 Hz	Vibration acceleration *a*	≤ 4.0 m/s^2 (13.12 ft/s^2)

Coolant temperature (ambient temperature) and installation altitude for motors with natural cooling and forced ventilation

Operation (unrestricted): -15 °C to +40 °C (+5 to 104 °F)

The rated power (rated torque) is applicable to continuous duty (S1) in accordance with EN 60034-1 at rated frequency, a coolant temperature of 40 °C (104 °F) and an installation altitude of up to 1000 m (3281 ft) above sea level.

Apart from the SIMOTICS M-1PH8 motors, all motors are designed for temperature class 155 (F) and utilized in accordance with temperature class 155 (F). The SIMOTICS M-1PH8 motors are designed for temperature class 180 (H). For all other conditions, the factors given in the table below must be applied to determine the permissible output (torque).

The coolant temperature and installation altitude are rounded to 5 °C (41 °F) and 500 m (1640 ft) respectively.

Installation altitude above sea level	Coolant temperature (ambient temperature)			
m (ft)	< 30 °C (86 °F)	30 ... 40 °C (86 ... 104 °F)	45 °C (113 °F)	50 °C (122 °F)
1000 (3281)	1.07	1.00	0.96	0.92
1500 (4922)	1.04	0.97	0.93	0.89
2000 (6562)	1.00	0.94	0.90	0.86
2500 (8203)	0.96	0.90	0.86	0.83
3000 (9843)	0.92	0.86	0.82	0.79
3500 (11484)	0.88	0.82	0.79	0.75
4000 (13124)	0.82	0.77	0.74	0.71

© Siemens AG 2017

Overview (continued)

Duty types S1 and S6 in accordance with EN 60034-1

S1: Continuous duty

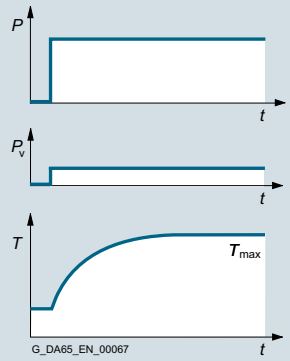

Duty cycle under constant load condition of sufficient duration to establish thermal equilibrium.

Designation: S1

Output specification (torque).

S6: Continuous duty with intermittent loading

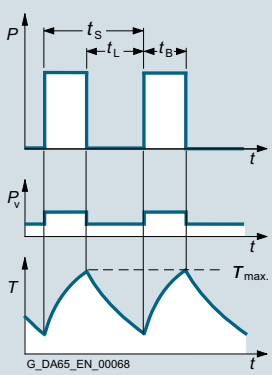

Duty cycle comprising a sequence of identical duty cycles, each of which consists of a period of constant load followed by an interval at no load. There are no de-energized intervals.

Designation:

e.g.: S6 - 40 %, 85 kW (114 HP)

$t_r = \frac{t_B}{t_B + t_L}$

t_s = 10 min

Rated torque

The torque supplied on the shaft is indicated in Nm (lb_f-ft) in the selection and ordering data.

$$M_{rated} = 9.55 \times P_{rated} \times \frac{1000}{n_{rated}}$$

P_{rated} Rated power in kW
n_{rated} Rated speed in rpm
M_{rated} Rated torque in Nm

$$M_{rated} = P_{rated} \times \frac{5250}{n_{rated}}$$

P_{rated} Rated power in hp
n_{rated} Rated speed in rpm
M_{rated} Rated torque in lb_f-ft

DURIGNIT IR 2000 insulation

The DURIGNIT IR 2000 insulation system consists of high-quality enamel wires and insulating sheeting in conjunction with solvent-free resin impregnation.

The insulating material system ensures that these motors will have a high mechanical and electrical stability, high service value, and a long service life.

The insulation system protects the winding to a large degree against aggressive gases, vapors, dust, oil, and increased air humidity. It can withstand the usual vibration stressing.

Characteristic curves

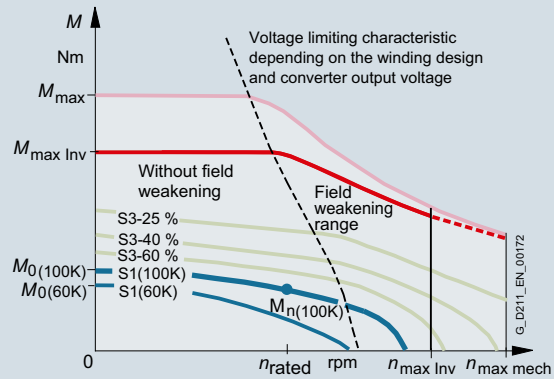

Torque characteristic of a synchronous motor operating on a converter with field weakening (example)

n_{rated}	Rated speed
$n_{max\ Inv}$	Maximum permissible electric speed limit
$n_{max\ mech}$	Maximum permissible mechanical speed limit
M_0	Static torque
M_{rated}	Rated torque at rated speed
$M_{max\ Inv}$	Achievable maximum torque with recommended motor module
M_{max}	Maximum permissible torque

© Siemens AG 2017

Overview (continued)

Motor protection

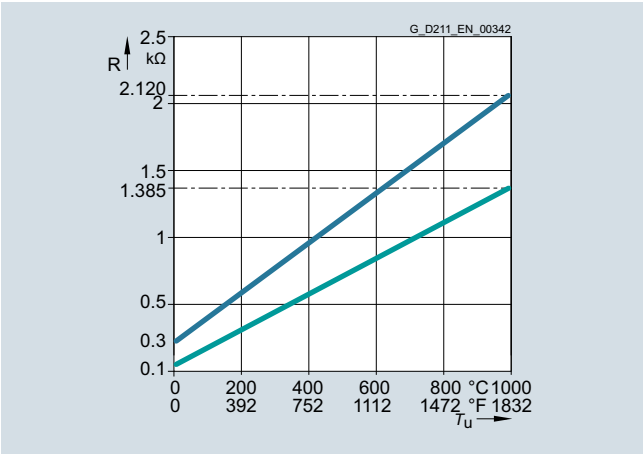

PT1000 temperature sensor characteristics does not focus on temperature range of importance (i.e. 0 to 300 degrees C)

The motor temperature for converter-fed motor operation is measured using the Pt1000 temperature sensor (see characteristic) and the KTY84-130 in isolated cases.

This temperature sensor is a semi-conductor that changes its resistance depending on temperature in accordance with a defined curve.

Siemens converters calculate the motor temperature from the resistance of the temperature sensor.

Their parameters can be set for specific alarm and shutdown temperatures.

The temperature sensor is embedded in the winding overhang of the motor in the same way as a PTC thermistor.

Motors without an integrated DRIVE-CLiQ are now fitted with the new Pt1000 temperature sensor. Exception 1FW6: The conversion will not take place until mid-2017.

Motors with an integrated DRIVE-CLiQ interface (1FT7/1FK7/1PH8/1FW3) will generally be converted to Pt1000 from the start of 2017.

Both sensors are evaluated in the SINAMICS S120 drive system as a standard function.

If the motors are operated on converters that do not feature a temperature sensor evaluation function, the temperature can be evaluated with the external 3RS1040 temperature monitoring relay.

For further information, please refer to Catalog IC 10 or visit the Siemens Industry Mall.
www.siemens.com/industrymall

Paint finish

SIMOTICS S-1FT7/S-1FK7 motors (up to SH 100) without a paint finish have an impregnated resin coating. Motors with primer have corrosion protection.

All motors can be painted over with commercially available paints. Up to 2 additional paint coats are permissible.

Version	Suitability of paint finish for climate group in accordance with IEC 60721, Part 2 – 1	
Paint finish	**Moderate** (expanded) for indoor and outdoor installation with roof protection	
	Briefly	up to 150 °C (302 °F)
	Continuously	up to 120 °C (248 °F)
Special paint finish	**Worldwide** (expanded) for outdoor installation	
	Briefly	up to 150 °C (302 °F)
	Continuously	up to 120 °C (248 °F)
	Also	For corrosive atmospheres up to 1% acid and alkali concentration or permanent dampness in sheltered rooms

© Siemens AG 2017

Overview (continued)

Built-in encoder systems without DRIVE-CLiQ interface

For motors without an integrated DRIVE-CLiQ interface, the analog encoder signal in the drive system is converted into a digital signal. For these motors as well as external encoders, the encoder signals must be connected to SINAMICS S120 via Sensor Modules.

Built-in encoder systems with DRIVE-CLiQ interface

For motors with an integrated DRIVE-CLiQ interface, the analog encoder signal is internally converted to a digital signal. No further conversion of the encoder signal in the drive system is required. The motor-internal encoders are the same encoders that are used for motors without a DRIVE-CLiQ interface. Motors with a DRIVE-CLiQ interface simplify commissioning and diagnostics, for example, as the encoder system is identified automatically.

The different encoder types, incremental, absolute, or resolver, are all connected with one type of MOTION-CONNECT DRIVE-CLiQ cable.

Short designations for the encoder systems

The first letters of the short designation define the encoder type. This is followed by the resolution in signals per revolution if S/R is specified (for encoders without DRIVE-CLiQ interface) or in bits if DQ or DQI is specified (for encoders with DRIVE-CLiQ interface).

Type	Resolution/interface	
AM AS IC IN HTL	xxxxSR	Encoder without DRIVE-CLiQ interface Resolution = xxxx signals per revolution
AM AS IC IN R	xxDQ or xxDQI	Encoder with DRIVE-CLiQ interface Resolution = xx bits (2^{xx})
AM	Multi-turn absolute encoder	
AS	Single-turn absolute encoder	
IC	Incremental encoder sin/cos with commutation position C and D tracks	
IN	Incremental encoder sin/cos without commutation position	
HTL	Incremental encoder with HTL signal	
R	Resolver	

Overview of motor encoder systems

Encoder without DRIVE-CLiQ interface					Encoder with DRIVE-CLiQ interface					Absolute position within one revolution (single-turn)	Absolute position over 4096 revolutions (multi-turn)	For use in safety applications [1]
	Identification letter in the motor article number					Identification letter in the motor article number						
Encoder	1FT7	1FK7	1FW3	1PH8	Encoder	1FT7	1FK7	1FW3	1PH8			
–	–	–	–	–	AM24DQI	C/L	C	C	–	Yes	Yes	Yes
–	–	–	–	–	AM20DQI	–	R	–	–	Yes	Yes	Yes
–	–	–	–	–	AS24DQI	B/K	B	B	–	Yes	No	Yes
–	–	–	–	–	AS20DQI	–	Q	–	–	Yes	No	Yes
AM2048S/R	M	E	E	E	AM22DQ	F	F	F	F	Yes	Yes	Yes
AM512S/R	–	H	–	–	AM20DQ	–	L	–	–	Yes	Yes	Yes
AM32S/R	–	G	–	–	AM16DQ	–	K	–	–	Yes	Yes	No
AM16S/R	–	J	–	–	AM15DQ	–	V	–	–	Yes	Yes	No
AS2048S/R	–	–	–	–	AS22DQ	–	–	–	–	Yes	No	No
IC2048S/R	N	A	A	M	IC22DQ	D	D	D	D	No	No	Yes
IN2048S/R	–	–	–	–	IN22DQ	–	–	–	–	No	No	Yes
HTL1024S/R	–	–	–	H	–	–	–	–	–	No	No	No
HTL2048S/R	–	–	–	J	–	–	–	–	–	No	No	No
Resolver p=1	–	T	–	–	R14DQ	–	P	–	–	Yes	No	No
Resolver p=3	–	S	S	–	R15DQ	–	U	U	–	No	No	No
Resolver p=4	–	S	S	–	R15DQ	–	U	U	–	No	No	No

Not every encoder is available for every motor shaft height.

– Not possible

[1] Not for SIMOTICS T-1FW3.

© Siemens AG 2017

Overview (continued)

Multi-turn absolute encoder

This encoder outputs an absolute angular position between 0° and 360° in the specified resolution. An internal measuring gearbox enables it to differentiate 4096 revolutions.

So with a ball screw, for example, the absolute position of the slide can be determined over a long distance.

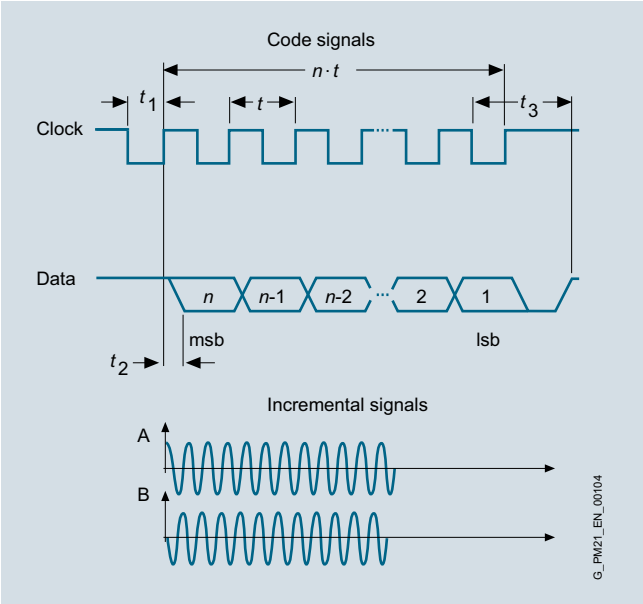

Multi-turn absolute encoder

Single-turn absolute encoder

This encoder outputs an absolute angular position between 0° and 360° in the specified resolution. In contrast to the multi-turn absolute encoder, it has no measuring gearbox and can therefore only supply the position value within one revolution. It does not have a traversing range.

Absolute encoders without DRIVE-CLiQ interface	
AM2048S/R encoder	Absolute encoder 2048 S/R, 4096 revolutions, multi-turn, with EnDat interface
AM512S/R encoder	Absolute encoder 512 S/R, 4096 revolutions, multi-turn, with EnDat interface
AM32S/R encoder	Absolute encoder 32 S/R, 4096 revolutions, multi-turn, with EnDat interface
AM16S/R encoder	Absolute encoder 16 S/R, 4096 revolutions, multi-turn, with EnDat interface
AS2048S/R encoder	Absolute encoder 2048 S/R, single-turn
Absolute encoders with DRIVE-CLiQ interface	
AM24DQI encoder	Absolute encoder, 24 bit (resolution 16777216, internal encoder 2048 S/R) + 12 bit multi-turn (traversing range 4096 revolutions)
AM20DQI encoder	Absolute encoder, 20 bit (resolution 1048576, internal 512 S/R) + 12 bit multi-turn (traversing range 4096 revolutions)
AM22DQ encoder	Absolute encoder, 22 bit (resolution 4194304, internal encoder 2048 S/R) + 12 bit multi-turn (traversing range 4096 revolutions)
AM20DQ encoder	Absolute encoder, 20 bit (resolution 1048576, internal 512 S/R) + 12 bit multi-turn (traversing range 4096 revolutions)
AM16DQ encoder	Absolute encoder, 16 bit (resolution 65536, internal 32 S/R) + 12 bit multi-turn (traversing range 4096 revolutions)
AM15DQ encoder	Absolute encoder, 15 bit (resolution 32768, internal 16 S/R) + 12 bit multi-turn (traversing range 4096 revolutions)
AS24DQI encoder [1]	Absolute encoder, single-turn, 24 bit (resolution 16777216)
AS20DQI encoder [1]	Absolute encoder, single-turn, 20 bit (resolution 1048576)

Technical specifications	
Absolute encoders without DRIVE-CLiQ interface	
Supply voltage	5 V
Absolute position interface via EnDat 2.1	
• Traversing range (multi-turn) [2]	4096 revolutions
Incremental signals (sinusoidal 1 V_{pp})	
• Signals per revolution	2048/512/32/16
Absolute encoders with DRIVE-CLiQ interface	
Supply voltage	24 V
Absolute position via DRIVE-CLiQ	
• Resolution within one revolution	$2^{24}/2^{22}/2^{20}/2^{16}/2^{15}$ bit
• Traversing range (multi-turn) [2]	4096 revolutions

[1] Not for absolute encoder, single-turn AS

[2] The single-turn absolute encoder is used for the previous incremental encoders.

© Siemens AG 2017

Overview (continued)

Incremental encoder

This encoder senses relative movements and does not supply absolute position information. In combination with evaluation logic, a zero point can be determined using the integrated reference mark, which can be used to calculate the absolute position.

Incremental encoder IC/IN (sin/cos)

The encoder outputs sine and cosine signals. These can be interpolated using evaluation logic (usually 2048 points) and the direction of rotation can be determined.

In the version with DRIVE-CLiQ interface, this evaluation logic is already integrated in the encoder.

Commutation position

The position of the rotor is required for commutation of a synchronous motor. Encoders with commutation position (also termed C and D tracks) detect the angular position of the rotor.

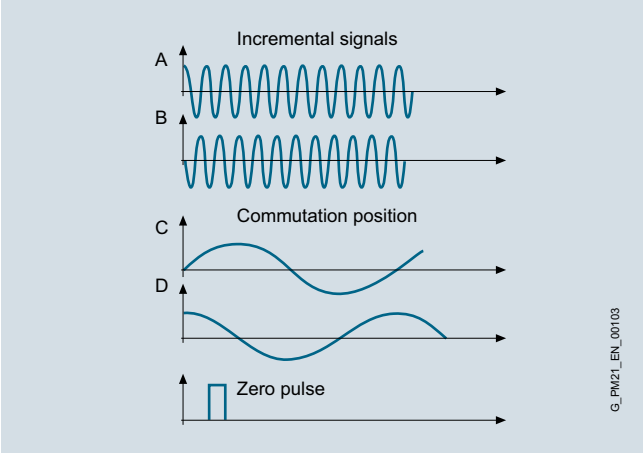

Incremental encoder IC/IN (sin/cos), commutation position only for IC

Incremental encoder HTL

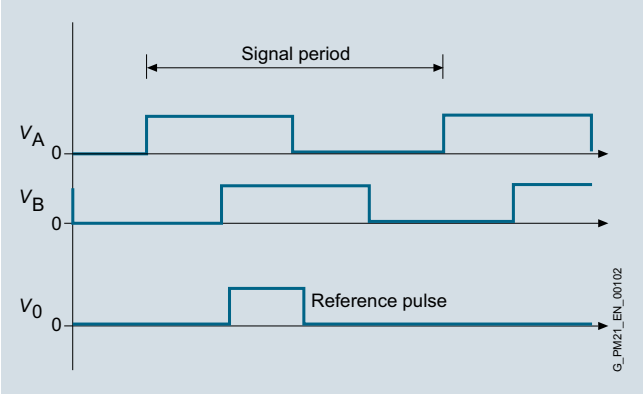

Incremental encoder HTL

Incremental encoders without DRIVE-CLiQ interface	
Encoder IC2048S/R	Incremental encoder sin/cos 1 V_{pp} 2048 S/R with C and D tracks
Encoder IN2048S/R	Incremental encoder sin/cos 1 V_{pp} 2048 S/R without C and D tracks
Encoder HTL2048S/R	Incremental encoder HTL 2048 S/R
Encoder HTL1024S/R	Incremental encoder HTL 1024 S/R
Incremental encoders with DRIVE-CLiQ interface [1)]	
IC22DQ encoder	Incremental encoder 22-bit (resolution 4194304, internal 2048 S/R) + commutation position 11 bit
IN22DQ encoder	Incremental encoder 22-bit (resolution 4194304, internal 2048 S/R) without commutation position

Technical specifications	
Incremental encoder IC/IN (sin/cos) without DRIVE-CLiQ interface	
Supply voltage	5 V
Incremental signals per revolution	
• Resolution (sin/cos)	2048
• Commutation position (only for IC)	1 sin/cos
• Reference signal	1
Incremental encoder IC/IN (sin/cos) with DRIVE-CLiQ interface	
Supply voltage	24 V
Incremental signals per revolution	
• Resolution	2^{22} bit
• Commutation position in bits (only for IC)	11
• Reference signal	1
Incremental encoder HTL without DRIVE-CLiQ interface	
Supply voltage	10 ... 30 V
Incremental signals per revolution	
• Resolution (HTL)	2048/1024
• Reference signal	1

[1)] Instead of the IC22DQ incremental encoder, the AS24DQI single-turn absolute encoder is used for SIMOTICS S-1FK7/1FT7.

© Siemens AG 2017

Overview (continued)

Resolver

The number of sine and cosine periods per revolution corresponds to the number of pole pairs of the resolver. In the case of a 2-pole resolver, the evaluation electronics may output an additional zero pulse per encoder revolution. This zero pulse ensures a unique assignment of the position information in relation to an encoder revolution. A 2-pole resolver can therefore be used as a single-turn encoder.

2-pole resolvers can be used for motors with any number of poles. With multi-pole resolvers, the pole pair numbers of the motor and the resolver are always identical, so that the resolution is correspondingly higher than with 2-pole resolvers.

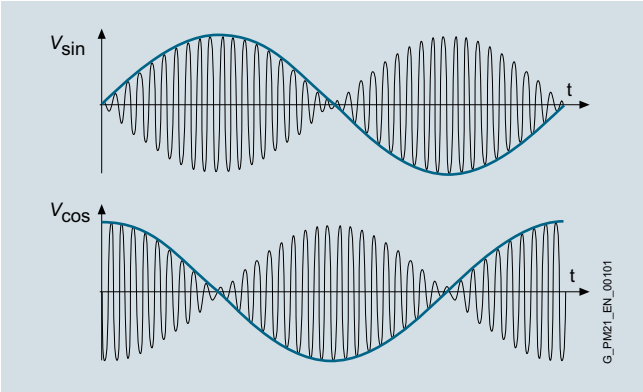

Resolvers without DRIVE-CLiQ interface [1]	
Resolver p = 1	2-pole resolver
Resolver p = 3	6-pole resolver
Resolver p = 4	8-pole resolver
Resolvers with DRIVE-CLiQ interface	
R15DQ	15-bit resolver (resolution 32768, internal multi-pole)
R14DQ	14-bit resolver (resolution 16384, internal 2-pole)

Technical specifications	
Resolvers without DRIVE-CLiQ interface	
Excitation voltage, rms	2 ... 8 V
Excitation frequency	5 ... 10 kHz
Output signals	$U_{\text{sine track}} = r \times U_{\text{excitation}} \times \sin \alpha$ $U_{\text{cosine track}} = r \times U_{\text{excitation}} \times \cos \alpha$ $\alpha = \arctan (U_{\text{sine track}}/U_{\text{cosine track}})$
Transmission ratio	$r = 0.5 \pm 5\%$
Resolvers with DRIVE-CLiQ interface	
Supply voltage	24 V
• Resolution	$2^{15}/2^{14}$ bit

[1] Output signals:
2-pole resolver: 1 sin/cos signal per revolution
6-pole resolver: 3 sin/cos signals per revolution
8-pole resolver: 4 sin/cos signals per revolution

© Siemens AG 2017

Overview

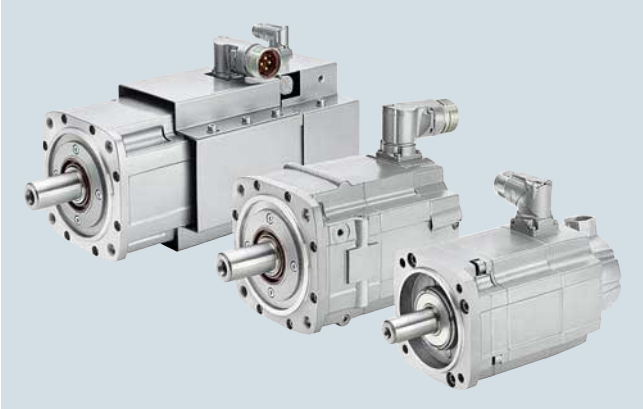

SIMOTICS S-1FT7 motors, forced ventilation, water cooling, and natural cooling

The SIMOTICS S-1FT7 servomotors are permanent-magnet synchronous motors with very compact dimensions and an attractive design.

The S-1FT7 motors fulfill the highest standards in terms of dynamic performance, speed setting range, shaft and flange accuracy. They are equipped with state-of-the-art encoder technology and optimized for operation on our fully digital drive and control systems.

Natural cooling, forced ventilation, or water cooling are available as cooling methods. With the natural cooling method, heat is dissipated through the surface of the motor. With the forced ventilation method, heat is forced out by means of built-on fans. The water cooling method achieves maximum cooling, thereby ensuring that the motor can be operated at maximum output.

Benefits

- Excellent dynamic performance in a wide speed range thanks to high overload capability ~ 4 × M_0 with natural cooling
- Wide speed setting range
- Outstanding resistance to vibratory and shock loads thanks to vibration-isolated encoder mounting
- High degree of protection – allows operation even under demanding ambient conditions
- Quick and easy mounting due to cross-profile (up to SH 100) and rotatable connectors with quick-release locks
- Zero-backlash holding brake
- Extremely high efficiency

SIMOTICS S-1FT7 Compact motors

S-1FT7 Compact motors have a low torque ripple so that they are ideal for use in machine tool applications that require extremely high surface quality and optimum machining results. Thanks to their compact dimensions, they can be installed in confined spaces.

SIMOTICS S-1FT7 High Dynamic motors

S-1FT7 High Dynamic motors have very low rotor moments of inertia to achieve extremely good dynamic performance and very short cycle times. The motors are available with forced ventilation or water cooling and have high continuous output ratings as a result.

Application

- High-performance machine tools
- Machines with stringent requirements in terms of dynamic performance and precision, e.g.:
  - Packaging machines
  - Foil extractor machines
  - Printing machines
  - Handling equipment

More information

Some SIMOTICS S-1FT7 Compact motors are available as core types. These core types can be express delivered as replacement motors in the event of plant outages and offer the advantage of a quicker spare parts supply. For this reason, core types should be used for configuration wherever possible.

The selection and ordering data for the SINAMICS S120 Motor Modules are based on the booksize format by way of example. Other formats are also possible. The SIZER for Siemens Drives engineering tool is available for detailed configuration.

© Siemens AG 2017

Technical specifications

SIMOTICS S-1FT7 Compact/S-1FT7 High Dynamic	
Motor type	Permanent-magnet synchronous motor
Magnet material	Rare-earth magnetic material
Cooling	Natural cooling, forced ventilation, water cooling
Temperature monitoring	Temperature sensor in stator winding
Stator winding insulation in accordance with EN 60034-1 (IEC 60034-1)	Temperature class 155 (F) for a winding temperature rise of ΔT = 100 K at an ambient temperature of 40 °C (104 °F). For water cooling, max. inlet temperature 30 °C (86 °F). Avoid condensation.
Type of construction in accordance with EN 60034-7 (IEC 60034-7)	IM B5 (IM V1, IM V3) with recessed flange (more compact) or with a flange compatible with 1FT6/1FK7
Degree of protection in accordance with EN 60034-5 (IEC 60034-5)	IP64/IP65/IP67
Shaft extension at DE in accordance with DIN 748-3 (IEC 60072-1)	Plain shaft/feather key and keyway (half-key balancing)
Shaft and flange accuracy in accordance with DIN 42955 (IEC 60072-1) [1]	Tolerance N/tolerance R
Vibration severity in accordance with EN 60034-14 (IEC 60034-14)	Grade A is maintained up to rated speed/Grade R
Sound pressure level *L*pA (1 m) in accordance with EN ISO 1680, max. Tolerance +3 dB Natural/water cooling • 1FT703 • 1FT704 ... 1FT706 • 1FT708 ... 1FT713 Forced ventilation • 1FT708 ... 1FT710	 60 dB 65 dB 70 dB 73 dB
Connection	Connectors for signals and power rotatable
Paint finish	Pearl dark gray RAL 9023
2nd rating plate	Enclosed separately
Holding brake	Without/with
Certificate of suitability	cURus

Built-in encoder systems without DRIVE-CLiQ interface

Incremental encoder	
Encoder IC2048S/R	Incremental encoder sin/cos 1 V_{pp} 2048 S/R with C and D tracks
Absolute encoder	
Encoder AM2048S/R	Absolute encoder 2048 S/R, 4096 revolutions, multi-turn

Built-in encoder systems with DRIVE-CLiQ interface

Single-turn absolute encoder [2]	
Encoder AS24DQI	Absolute encoder, single-turn, 24 bit
Multi-turn absolute encoder	
Encoder AM24DQI	Absolute encoder, 24 bit + 12-bit multi-turn

S/R = signals/revolution

[1] Shaft extension run-out, concentricity of centering ring and shaft, and perpendicularity of flange to shaft.

[2] The single-turn absolute encoder is used for the previous incremental encoders.

[3] Additional plain text required.

Options

Order code	Description
J..	Mounting of SP+ planetary gearbox (see SIMOTICS S geared motors)
K20	Reinforced bearing with transverse forces as specified in the latest configuration manual (S-1FT7 Compact only, in conjunction with flange compatible with S-1FT6/S-1FT7)
L03	Version for increased vibration stress (information about validity and specification can be found in the latest configuration manual)
N05	Alternative shaft geometry
N16	Version for increased chemical resistance
N40	Stainless-steel shaft and coating for increased chemical resistance (information about validity and specification can be found in the latest configuration manual)
Q12	Sealing air connection (Only in conjunction with degree of protection IP67. Not in combination with terminal box)
Y84	Customer specifications on rating plate (max. 30 characters) [3]
	Paint finish
K23	Special paint finish for "Worldwide" climate group: Primer and paint finish: Anthracite RAL 7016
K23+X..	Special paint finish for "Worldwide" climate group: Primer and other paint finish can be selected from X01 to X09
K24	Primed (unpainted)
X01	Paint finish: Jet black, matt RAL 9005
X02	Paint finish: Cream white RAL 9001
X03	Paint finish: Reseda green RAL 6011
X04	Paint finish: Pebble gray RAL 7032
X05	Paint finish: Sky blue RAL 5015
X06	Paint finish: Light ivory RAL 1015
X08	Paint finish: White aluminum
X09	Paint finish: Anthracite RAL 7016

-Z must be added to the Article No. to order a motor with options.

N05
Alternative shaft geometry

The following versions are delivered with a smaller shaft extension:

- 1FT7034-5A.71-.... /1FT7042-5A.71-....
- 1FT7062-5A.71-.... /1FT7064-5A.71-....
- 1FT7082-5A.71-.... /1FT7084-5A.71-.... /1FT7086-5A.71-....
- 1FT7102-5A.71-.... /1FT7105-5A.71-.... /1FT7108-5A.71-....

Shaft dimensions (diameter × length) according to shaft height (SH):

- SH 36: 11 × 23 mm (0.43 x 0.91 in)
- SH 48: 14 × 30 mm (0.55 x 1.18 in)
- SH 63: 19 × 40 mm (0.75 x 1.57 in)
- SH 80: 24 × 50 mm (0.94 x 1.97 in)
- SH 100: 32 × 58 mm (1.26 x 2.28 in)

N16
Version for increased chemical resistance

Please refer to the latest configuration manual for further information.

Option N16 is available for the following naturally cooled SIMOTICS S-1FT7 Compact motors (only up to SH 100):

- 1FT7...-5A...-1B.. AS24DQI encoder
- 1FT7...-5A...-1C.. AM24DQI encoder
- 1FT7...-5A...-1M.. AM2048S/R encoder

© Siemens AG 2017

Selection and ordering data

Rated speed	Shaft height	Rated power	Static torque	Rated torque	Rated current	SIMOTICS S-1FT7 Compact synchronous motors	No. of pole pairs	Moment of inertia Rotor (without brake)	Weight (without brake)
n_{rated}	SH	P_{rated} at ΔT=100 K	M_0 at ΔT=100 K	M_{rated} at ΔT=100 K	I_{rated} at ΔT=100 K	Core type	p	J	m
rpm		kW (hp)	Nm (lb_f-ft)	Nm (lb_f-ft)	A	Article No.		10^{-4} kgm^2 (10^{-3} lb_f-in-s^2)	kg (lb)
SIMOTICS S-1FT7 Compact for DC link voltage 510 ... 720 V DC – Natural cooling									
2000	100	5.03 (6.75)	30 (22.1)	24 (17.7)	10	**1FT7102-1AC7■-1 ■ ■ 1**	5	91.4 (80.90)	26.1 (57.5)
		7.96 (10.7)	50 (36.9)	38 (28.0)	15	**1FT7105-1AC7■-1 ■ ■ 1**	5	178 (157.55)	44.2 (97.4)
3000	48	1.35 (1.81)	5 (3.69)	4.3 (3.17)	2.6	**1FT7044-1AF7■-1 ■ ■ 1**	3	5.43 (4.81)	7.2 (15.9)
	63	1.7 (2.28)	6 (4.43)	5.4 (3.98)	3.9	**1FT7062-1AF7■-1 ■ ■ 1**	5	7.36 (6.51)	7.1 (15.7)
		2.39 (3.21)	9 (6.64)	7.6 (5.61)	5.2	**1FT7064-1AF7■-1 ■ ■ 1**	5	11.9 (10.53)	9.7 (21.4)
	80	3.24 (4.34)	13 (9.59)	10.3 (7.60)	6.6	**1FT7082-1AF7■-1 ■ ■ 1**	5	26.5 (23.46)	14 (30.9)
		4.56 (6.12)	20 (14.8)	14.5 (10.7)	8.5	**1FT7084-1AF7■-1 ■ ■ 1**	5	45.1 (39.92)	20.8 (45.9)
		5.65 (7.58)	28 (20.7)	18 (13.3)	11	**1FT7086-1AF7■-1 ■ ■ 1**	5	63.6 (56.29)	27.5 (60.6)
4500	80	4.82 (6.46) [1]	20 (14.8)	11.5 (8.48) [1]	10.1 [1]	**1FT7084-1AH7■-1 ■ ■ 1**	5	45.1 (39.92)	20.8 (45.9)
		4.71 (6.32)	28 (20.7)	10 (7.38)	10	**1FT7086-1AH7■-1 ■ ■ 1**	5	63.6 (56.29)	27.5 (60.6)
6000	36	0.88 (1.18)	2 (1.48)	1.4 (1.03)	2.1	**1FT7034-1AK7■-1 ■ ■ 1**	3	0.85 (0.75)	3.8 (8.38)
	63	2.13 (2.86) [2]	6 (4.43)	3.7 (2.73) [2]	5.9 [2]	**1FT7062-1AK7■-1 ■ ■ 1**	5	7.36 (6.51)	7.1 (15.7)
		2.59 (3.47) [3]	9 (6.64)	5.5 (4.06) [3]	6.1 [3]	**1FT7064-1AK7■-1 ■ ■ 1**	5	11.9 (10.53)	9.7 (21.4)

With DRIVE-CLiQ interface:						
	Flange:	Classic (compatible with 1FT6/1FK7)		1		
		Recessed (more compact)		0		
	Encoder:	AS24DQI encoder	RJ45 signal connection		B	
			M17 signal connection		K	
		AM24DQI encoder	RJ45 signal connection		C	
			M17 signal connection		L	
Without DRIVE-CLiQ interface:						
	Flange:	Classic (compatible with 1FT6/1FK7)		4		
		Recessed (more compact)		5		
	Encoder:	IC2048S/R encoder	M23 signal connection		N	
		AM2048S/R encoder	M23 signal connection		M	
Shaft extension:	**Shaft and flange accuracy:**		**Holding brake:**			
Plain shaft	Tolerance N		Without			G
Plain shaft	Tolerance N		With			H
Vibration severity:	**Degree of protection:**					
Grade A	IP65					1

8

For footnotes, see next page.

© Siemens AG 2017

Motor type (repeated)	Efficiency 4)	Stall current	Calculated power P_{calc} 8)	SINAMICS S120 Motor Module: Rated output current 5)	Booksize format, Internal air cooling (For other components, see SINAMICS S120 drive system)	Power cable with complete shield, Motor connection (and brake connection) via power connector: Power connector	Cable cross-section 6)	Pre-assembled cable
	η	I_0 at M_0 ΔT = 100 K	P_{calc} at M_0 ΔT=100 K	I_{rated}				
	%	A	kW (hp)	A	Article No.	Size	mm²	Article No.
1FT7102-1AC7...	93	12.5	6.28 (8.42)	18	**6SL3120-■TE21-8AD.**	1.5	4 × 1.5	**6FX■002-5■N26-....**
1FT7105-1AC7...	93	18	10.47 (14.0)	18	**6SL3120-■TE21-8AD.**	1.5	4 × 2.5	**6FX■002-5■N36-....**
1FT7044-1AF7...	92	2.8	1.57 (2.11)	3	**6SL3120-■TE13-0AD.**	1	4 × 1.5	**6FX■002-5■N06-....**
1FT7062-1AF7...	91	3.9	1.88 (2.52)	5	**6SL3120-■TE15-0AD.**	1	4 × 1.5	**6FX■002-5■N06-....**
1FT7064-1AF7...	93	5.7	2.83 (3.80)	9	**6SL3120-■TE21-0AD.**	1	4 × 1.5	**6FX■002-5■N06-....**
1FT7082-1AF7...	93	7.6	4.08 (5.47)	9	**6SL3120-■TE21-0AD.**	1	4 × 1.5	**6FX■002-5■N06-....**
1FT7084-1AF7...	93	11	6.28 (8.42)	18	**6SL3120-■TE21-8AD.**	1	4 × 1.5	**6FX■002-5■N06-....**
1FT7086-1AF7...	93	15.5	8.8 (11.8)	18	**6SL3120-■TE21-8AD.**	1.5	4 × 2.5	**6FX■002-5■N36-....**
1FT7084-1AH7...	93	15.6	9.42 (12.6)	18	**6SL3120-■TE21-8AD.**	1.5	4 × 2.5	**6FX■002-5■N36-....**
1FT7086-1AH7...	91	22.4	13.19 (17.7)	30	**6SL3120-1TE23-0AD.**	1.5	4 × 4	**6FX■002-5■N46-....**
1FT7034-1AK7...	90	2.7	1.26 (1.69)	3	**6SL3120-■TE13-0AD.**	1	4 × 1.5	**6FX■002-5■N06-....**
1FT7062-1AK7...	90	8.4	3.77 (5.06)	9	**6SL3120-■TE21-0AD.**	1	4 × 1.5	**6FX■002-5■N06-....**
1FT7064-1AK7...	91	9	5.65 (7.58)	9	**6SL3120-■TE21-0AD.**	1	4 × 1.5	**6FX■002-5■N06-....**

Motor Module:	
Single Motor Module	**1**
Double Motor Module	**2**
Version status	

Power cable:	
MOTION-CONNECT 800PLUS	**8**
MOTION-CONNECT 500	**5**
Without brake cores	**C**
With brake cores 7)	**D**
Length code	**....**

For information on the cables, refer to MOTION-CONNECT connection systems

8

1) These values refer to n = 4000 rpm.
2) These values refer to n = 5500 rpm.
3) These values refer to n = 4500 rpm.
4) Optimum efficiency in continuous duty.
5) With default setting of the pulse frequency.
6) The current carrying capacity of the power cables complies with EN 60204-1 for installation type C, for continuous duty at an ambient air temperature of 40 °C (104 °F).
7) Cable cross-section for brake connection 2 × 1.5 mm².
8) $P_{calc}\,[\text{kW}] = \frac{M_0\,[\text{Nm}] \times n_{rated}}{9550}$ $\quad P_{calc}\,[\text{hp}] = \frac{M_0\,[\text{lb}_f\text{-ft}] \times n_{rated}}{5250}$

© Siemens AG 2017

Selection and ordering data

Rated speed	Shaft height	Rated power	Static torque	Rated torque	Rated current	SIMOTICS S-1FT7 Compact synchronous motors	No. of pole pairs	Moment of inertia Rotor (without brake)	Weight (without brake)
n_{rated}	SH	P_{rated} at ΔT=100 K	M_0 at ΔT=100 K	M_{rated} at ΔT=100 K	I_{rated} at ΔT=100 K		p	J	m
rpm		kW (hp)	Nm (lb_f-ft)	Nm (lb_f-ft)	A	Article No.		10^{-4} kgm^2 (10^{-3} lb_f-in-s^2)	kg (lb)
SIMOTICS S-1FT7 Compact for DC link voltage 510 ... 720 V DC – Natural cooling									
1500	100	4.08 (5.47)	30 (22.1)	26 (19.2)	8	**1FT7102-5AB7■-1 ■ ■ ■**	5	91.4 (80.90)	26.1 (57.6)
		6.6 (8.85)	50 (36.9)	42 (31.0)	13	**1FT7105-5AB7■-1 ■ ■ ■**	5	178 (158)	44.2 (97.5)
		9.58 (12.8)	70 (51.6)	61 (45.0)	16	**1FT7108-5AB7■-1 ■ ■ ■**	5	248 (220)	59 (130)
	132	10.52 (14.1)	90 (66.4)	67 (49.4)	17.4	**1FT7132-5AB7■-1 ■ ■ ■**	4	459 (406)	76 (168)
		12.88 (17.3)	118 (87.0)	82 (60.5)	22.0	**1FT7134-5AB7■-1 ■ ■ ■**	4	604 (535)	92 (203)
		14.45 (19.4)	140 (103)	92 (67.9)	25.0	**1FT7136-5AB7■-1 ■ ■ ■**	4	748 (662)	108 (238)
		16.96 (22.7)	170 (125)	108 (79.7)	28.5	**1FT7138-5AB7■-■ ■ ■ ■**	4	896 (793)	124 (273)
2000	80	2.39 (3.21)	13 (9.59)	11.4 (8.41)	4.9	**1FT7082-5AC7■-1 ■ ■ ■**	5	26.5 (23.5)	14 (30.9)
		3.54 (4.75)	20 (14.8)	16.9 (12.5)	8.4	**1FT7084-5AC7■-1 ■ ■ ■**	5	45.1 (39.9)	20.8 (45.9)
		4.71 (6.32)	28 (20.7)	22.5 (16.6)	9.2	**1FT7086-5AC7■-1 ■ ■ ■**	5	63.6 (56.3)	27.5 (60.6)
	100	5.03 (6.75)	30 (22.1)	24 (17.7)	10	**1FT7102-5AC7■-1 ■ ■ ■**	5	91.4 (80.9)	26.1 (57.6)
		7.96 (10.7)	50 (36.9)	38 (28.0)	15	**1FT7105-5AC7■-1 ■ ■ ■**	5	178 (158)	44.2 (97.5)
		10.5 (14.1)	70 (51.6)	50 (36.9)	18	**1FT7108-5AC7■-1 ■ ■ ■**	5	248 (220)	59 (130)
	132	11.52 (15.4)	90 (66.4)	55 (40.6)	18.7	**1FT7132-5AC7■-1 ■ ■ ■**	4	459 (406)	76 (168)
		13.82 (18.5) [5]	118 (87.0)	66 (48.7) [5]	21 [5]	**1FT7134-5AC7■-1 ■ ■ ■**	4	604 (535)	92 (203)
		14.87 (19.9) [5]	140 (103)	71 (52.4) [5]	23.0 [5]	**1FT7136-5AC7■-■ ■ ■ ■**	4	748 (662)	109 (240)

With DRIVE-CLiQ interface:				
	Flange:	Classic (compatible with 1FT6/1FK7)		1
		Recessed (more compact) [7]		0
	Encoder:	AS24DQI encoder	RJ45 signal connection	B
			M17 signal connection	K
		AM24DQI encoder	RJ45 signal connection	C
			M17 signal connection	L
Without DRIVE-CLiQ interface:				
	Flange:	Classic (compatible with 1FT6/1FK7)		4
		Recessed (more compact) [7]		5
	Encoder:	IC2048S/R encoder	M23 signal connection	N
		AM2048S/R encoder	M23 signal connection	M
Connector outlet direction:		Connector sizes 1 and 1.5	Rotatable connector	1
		Connector size 3 [1]	Transverse right	1
			Transverse left	2
			Axial NDE	3
			Axial DE	4
Terminal box/ cable entry: [1]		Top/transverse from right		5
		Top/transverse from left		6
		Top/axial from NDE		7
		Top/axial from DE		8

Shaft extension:	**Shaft and flange accuracy:**	**Holding brake:**	
Feather key and keyway	Tolerance N	Without	A
Feather key and keyway	Tolerance N	With	B
Feather key and keyway	Tolerance R	Without	D
Feather key and keyway	Tolerance R	With	E
Plain shaft	Tolerance N	Without	G
Plain shaft	Tolerance N	With	H
Plain shaft	Tolerance R	Without	K
Plain shaft	Tolerance R	With	L

Vibration severity:	**Degree of protection:**	
Grade A	IP64	0
Grade A	IP65	1
Grade A	IP67	2
Grade R	IP64	3
Grade R	IP65	4
Grade R	IP67	5

For footnotes, see next page.

© Siemens AG 2017

Motor type (repeated)	Efficiency 2)	Stall current	Calculated power P_{calc} 8)	SINAMICS S120 Motor Module: Rated output current 3)	Booksize format, Internal air cooling (For other components, see SINAMICS S120 drive system)	Power cable with complete shield, Motor connection (and brake connection) via power connector: Power connector	Cable cross-section 4)	Pre-assembled cable
	η	I_0 at M_0 ΔT = 100 K	P_{calc} at M_0 ΔT=100 K	I_{rated}				
	%	A	kW (hp)	A	Article No.	Size	mm²	Article No.
1FT7102-5AB7...	93	9	4.71 (6.32)	9	**6SL3120-■TE21-0AD.**	1.5	4 × 1.5	**6FX■002-5■N26-....**
1FT7105-5AB7...	93	15	7.85 (10.5)	18	**6SL3120-■TE21-8AD.**	1.5	4 × 1.5	**6FX■002-5■N26-....**
1FT7108-5AB7...	93	18	10.99 (14.7)	18	**6SL3120-■TE21-8AD.**	1.5	4 × 2.5	**6FX■002-5■N36-....**
1FT7132-5AB7...	94	22.5	14.14 (19.0)	30	**6SL3120-1TE23-0AD.**	1.5	4 × 4	**6FX■002-5■N46-....**
1FT7134-5AB7...	95	30.0	18.53 (24.8)	30	**6SL3120-1TE23-0AD.**	1.5	4 × 6	**6FX■002-5■N54-....**
1FT7136-5AB7...	94	36.0	21.99 (29.5)	45	**6SL3120-1TE24-5AA.**	1.5	4 × 6	**6FX■002-5■N54-....**
1FT7138-5AB7...	94	43.0	26.7 (35.8)	45	**6SL3120-1TE24-5AA.**	3	4 × 10	**6FX■002-5■S14-....**
1FT7082-5AC7...	93	5	2.72 (3.65)	5	**6SL3120-■TE15-0AD.**	1	4 × 1.5	**6FX■002-5■N06-....**
1FT7084-5AC7...	93	9	4.19 (5.62)	9	**6SL3120-■TE21-0AD.**	1	4 × 1.5	**6FX■002-5■N06-....**
1FT7086-5AC7...	93	10.6	5.86 (7.86)	18	**6SL3120-■TE21-8AD.**	1	4 × 1.5	**6FX■002-5■N06-....**
1FT7102-5AC7...	93	12.5	6.28 (8.42)	18	**6SL3120-■TE21-8AD.**	1.5	4 × 1.5	**6FX■002-5■N26-....**
1FT7105-5AC7...	93	18	10.47 (14.0)	18	**6SL3120-■TE21-8AD.**	1.5	4 × 2.5	**6FX■002-5■N36-....**
1FT7108-5AC7...	93	25	14.66 (19.7)	30	**6SL3120-1TE23-0AD.**	1.5	4 × 4	**6FX■002-5■N46-....**
1FT7132-5AC7...	94	29.5	18.85 (25.3)	30	**6SL3120-1TE23-0AD.**	1.5	4 × 6	**6FX■002-5■N56-....**
1FT7134-5AC7...	95	36.0	24.71 (33.1)	45	**6SL3120-1TE24-5AA.**	1.5	4 × 6	**6FX■002-5■N54-....**
1FT7136-5AC7...	94	43.0	29.32 (39.3)	45	**6SL3120-1TE24-5AA.**	3	4 × 10	**6FX■002-5■S14-....**

Motor Module:	
Single Motor Module	**1**
Double Motor Module	**2**
Version status	

Power cable:		
MOTION-CONNECT 800PLUS	**8**	
MOTION-CONNECT 500	**5**	
Without brake cores		**C**
With brake cores 6)		**D**
Length code		**....**

For information on the cables, refer to MOTION-CONNECT connection systems

8

1) Connector size 3 not rotatable. An alternative terminal box can be selected with connector size 3 only.
2) Optimum efficiency in continuous duty.
3) With default setting of the pulse frequency.
4) The current carrying capacity of the power cables complies with EN 60204-1 for installation type C, for continuous duty at an ambient air temperature of 40 °C (104 °F).
5) Rated data are applicable with a DC link voltage of 600 to 720 V DC.
6) Cable cross-section for brake connection 2 × 1.5 mm².
7) Only up to SH 100.
8) $P_{calc}\,[\text{kW}] = \frac{M_0\,[\text{Nm}] \times n_{rated}}{9550}$ $\quad P_{calc}\,[\text{hp}] = \frac{M_0\,[\text{lb}_f\text{-ft}] \times n_{rated}}{5250}$

© Siemens AG 2017

Selection and ordering data

Rated speed	Shaft height	Rated power	Static torque	Rated torque	Rated current	SIMOTICS S-1FT7 Compact synchronous motors	No. of pole pairs	Moment of inertia Rotor (without brake)	Weight (without brake)
n_{rated}	SH	P_{rated} at ΔT=100 K	M_0 at ΔT=100 K	M_{rated} at ΔT=100 K	I_{rated} at ΔT=100 K		p	J	m
rpm		kW (hp)	Nm (lb_f-ft)	Nm (lb_f-ft)	A	Article No.		10^{-4} kgm^2 (10^{-3} lb_f-in-s^2)	kg (lb)
SIMOTICS S-1FT7 Compact for DC link voltage 510 ... 720 V DC – Natural cooling									
3000	48	0.85 (1.14)	3 (2.21)	2.7 (1.99)	2.1	**1FT7042-5AF7■-1 ■ ■ ■**	3	2.81 (2.49)	4.6 (10.1)
		1.35 (1.81)	5 (3.69)	4.3 (3.17)	2.6	**1FT7044-5AF7■-1 ■ ■ ■**	3	5.43 (4.81)	7.2 (15.9)
		1.76 (2.36)	7 (5.16)	5.6 (4.13)	3.5	**1FT7046-5AF7■-1 ■ ■ ■**	3	7.52 (6.66)	9.3 (20.5)
	63	1.7 (2.28)	6 (4.43)	5.4 (3.98)	3.9	**1FT7062-5AF7■-1 ■ ■ ■**	5	7.36 (6.51)	7.1 (15.7)
		2.39 (3.21)	9 (6.64)	7.6 (5.61)	5.2	**1FT7064-5AF7■-1 ■ ■ ■**	5	11.9 (10.5)	9.7 (21.4)
		2.92 (3.92)	12 (8.85)	9.3 (6.86)	7.2	**1FT7066-5AF7■-1 ■ ■ ■**	5	16.4 (14.5)	12.3 (27.1)
		3.42 (4.59)	15 (11.1)	10.9 (8.04)	6.7	**1FT7068-5AF7■-1 ■ ■ ■**	5	23.2 (20.5)	16.3 (35.9)
	80	3.24 (4.34)	13 (9.59)	10.3 (7.60)	6.6	**1FT7082-5AF7■-1 ■ ■ ■**	5	26.5 (23.5)	14 (30.9)
		4.55 (6.10)	20 (14.8)	14.5 (10.7)	8.5	**1FT7084-5AF7■-1 ■ ■ ■**	5	45.1 (39.9)	20.8 (45.9)
		5.65 (7.58)	28 (20.7)	18 (13.3)	11	**1FT7086-5AF7■-1 ■ ■ ■**	5	63.6 (56.3)	27.5 (60.6)
	100	6.28 (8.42)	30 (22.1)	20 (14.8)	12	**1FT7102-5AF7■-1 ■ ■ ■**	5	91.4 (80.9)	26.1 (57.6)
		8.8 (11.8)	50 (36.9)	28 (20.7)	15	**1FT7105-5AF7■-1 ■ ■ ■**	5	178 (158)	44.2 (97.5)
		6.28 (8.42)	70 (51.6)	20 (14.8)	12	**1FT7108-5AF7■-1 ■ ■ ■**	5	248 (220)	59 (130)
	132	8.48 (11.4)	90 (66.4)	27 (19.9)	14	**1FT7132-5AF7■-■ ■ ■ ■**	4	459 (406)	77 (170)

With DRIVE-CLiQ interface:					
	Flange:	Classic (compatible with 1FT6/1FK7)		**1**	
		Recessed (more compact) [6]		**0**	
	Encoder:	AS24DQI encoder	RJ45 signal connection		**B**
			M17 signal connection		**K**
		AM24DQI encoder	RJ45 signal connection		**C**
			M17 signal connection		**L**
Without DRIVE-CLiQ interface:					
	Flange:	Classic (compatible with 1FT6/1FK7)		**4**	
		Recessed (more compact) [6]		**5**	
	Encoder:	IC2048S/R encoder	M23 signal connection		**N**
		AM2048S/R encoder	M23 signal connection		**M**
Connector outlet direction:		Connector sizes 1 and 1.5	Rotatable connector	**1**	
		Connector size 3 [1]	Transverse right	**1**	
			Transverse left	**2**	
			Axial NDE	**3**	
			Axial DE	**4**	
Terminal box/ cable entry: [1]		Top/transverse from right		**5**	
		Top/transverse from left		**6**	
		Top/axial from NDE		**7**	
		Top/axial from DE		**8**	

Shaft extension:	**Shaft and flange accuracy:**	**Holding brake:**	
Feather key and keyway	Tolerance N	Without	**A**
Feather key and keyway	Tolerance N	With	**B**
Feather key and keyway	Tolerance R	Without	**D**
Feather key and keyway	Tolerance R	With	**E**
Plain shaft	Tolerance N	Without	**G**
Plain shaft	Tolerance N	With	**H**
Plain shaft	Tolerance R	Without	**K**
Plain shaft	Tolerance R	With	**L**

Vibration severity:	**Degree of protection:**	
Grade A	IP64	**0**
Grade A	IP65	**1**
Grade A	IP67	**2**
Grade R	IP64	**3**
Grade R	IP65	**4**
Grade R	IP67	**5**

For footnotes, see next page.

© Siemens AG 2017

Motor type (repeated)	Efficiency [2]	Stall current	Calculated power P_{calc} [7]	SINAMICS S120 Motor Module: Rated output current [3]	Booksize format, Internal air cooling (For other components, see SINAMICS S120 drive system)	Power cable with complete shield, Motor connection (and brake connection) via power connector: Power connector	Cable cross-section [4]	Pre-assembled cable
	η	I_0 at M_0 ΔT = 100 K	P_{calc} at M_0 ΔT=100 K	I_{rated}				
	%	A	kW (hp)	A	Article No.	Size	mm²	Article No.
1FT7042-5AF7...	92	2.1	0.94 (1.26)	3	**6SL3120-■TE13-0AD.**	1	4 × 1.5	**6FX■002-5■N06-....**
1FT7044-5AF7...	92	2.8	1.57 (2.11)	3	**6SL3120-■TE13-0AD.**	1	4 × 1.5	**6FX■002-5■N06-....**
1FT7046-5AF7...	92	4	2.2 (2.95)	5	**6SL3120-■TE15-0AD.**	1	4 × 1.5	**6FX■002-5■N06-....**
1FT7062-5AF7...	91	3.9	1.88 (2.52)	5	**6SL3120-■TE15-0AD.**	1	4 × 1.5	**6FX■002-5■N06-....**
1FT7064-5AF7...	93	5.7	2.83 (3.80)	9	**6SL3120-■TE21-0AD.**	1	4 × 1.5	**6FX■002-5■N06-....**
1FT7066-5AF7...	92	8.4	3.77 (5.06)	9	**6SL3120-■TE21-0AD.**	1	4 × 1.5	**6FX■002-5■N06-....**
1FT7068-5AF7...	92	8.3	4.71 (6.32)	9	**6SL3120-■TE21-0AD.**	1	4 × 1.5	**6FX■002-5■N06-....**
1FT7082-5AF7...	93	7.6	4.08 (5.47)	9	**6SL3120-■TE21-0AD.**	1	4 × 1.5	**6FX■002-5■N06-....**
1FT7084-5AF7...	93	11	6.28 (8.42)	18	**6SL3120-■TE21-8AD.**	1	4 × 1.5	**6FX■002-5■N06-....**
1FT7086-5AF7...	93	15.5	8.8 (11.8)	18	**6SL3120-■TE21-8AD.**	1.5	4 × 2.5	**6FX■002-5■N36-....**
1FT7102-5AF7...	93	18	9.42 (12.6)	18	**6SL3120-■TE21-8AD.**	1.5	4 × 2.5	**6FX■002-5■N36-....**
1FT7105-5AF7...	94	26	15.71 (21.1)	30	**6SL3120-1TE23-0AD.**	1.5	4 × 4	**6FX■002-5■N46-....**
1FT7108-5AF7...	93	36	21.99 (29.5)	45	**6SL3120-1TE24-5AA.**	1.5	4 × 6	**6FX■002-5■N54-....**
1FT7132-5AF7...	94	43.5	28.27 (37.9)	45	**6SL3120-1TE24-5AA.**	3	4 × 10	**6FX■002-5■S14-....**

Motor Module:	
Single Motor Module	**1**
Double Motor Module	**2**
Version status	

Power cable:	
MOTION-CONNECT 800PLUS	**8**
MOTION-CONNECT 500	**5**
Without brake cores	**C**
With brake cores [5]	**D**
Length code	**....**

For information on the cables, refer to MOTION-CONNECT connection systems

8

1) Connector size 3 not rotatable. An alternative terminal box can be selected with connector size 3 only.
2) Optimum efficiency in continuous duty.
3) With default setting of the pulse frequency.
4) The current carrying capacity of the power cables complies with EN 60204-1 for installation type C, for continuous duty at an ambient air temperature of 40 °C (104 °F).
5) Cable cross-section for brake connection 2 × 1.5 mm².
6) Only up to SH 100.
7) $P_{calc}\,[\text{kW}] = \frac{M_0\,[\text{Nm}] \times n_{rated}}{9550}$ $\quad P_{calc}\,[\text{hp}] = \frac{M_0\,[\text{lb}_f\text{-ft}] \times n_{rated}}{5250}$

© Siemens AG 2017

Selection and ordering data

Rated speed	Shaft height	Rated power	Static torque	Rated torque	Rated current	SIMOTICS S-1FT7 Compact synchronous motors	No. of pole pairs	Moment of inertia Rotor (without brake)	Weight (without brake)
n_{rated}	SH	P_{rated} at ΔT=100 K	M_0 at ΔT=100 K	M_{rated} at ΔT=100 K	I_{rated} at ΔT=100 K		p	J	m
rpm		kW (hp)	Nm (lb_f-ft)	Nm (lb_f-ft)	A	Article No.		10^{-4} kgm^2 (10^{-3} lb_f-in-s^2)	kg (lb)
SIMOTICS S-1FT7 Compact for DC link voltage 510 ... 720 V DC – Natural cooling									
4500	48	1.32 (1.77) [1]	7 (5.16)	3.6 (2.66) [1]	4.7 [1]	**1FT7046-5AH7■-1 ■ ■ ■**	3	7.52 (6.66)	9.3 (20.5)
	63	2.55 (3.42) [2]	12 (8.85)	6.1 (4.50) [2]	7.5 [2]	**1FT7066-5AH7■-1 ■ ■ ■**	5	16.4 (14.5)	12.3 (27.1)
	80	3.77 (5.06)	13 (9.59)	8 (5.90)	7.8	**1FT7082-5AH7■-1 ■ ■ ■**	5	26.5 (23.5)	14 (30.9)
		4.82 (6.46) [2]	20 (14.8)	11.5 (8.48) [2]	10.1 [2]	**1FT7084-5AH7■-1 ■ ■ ■**	5	45.1 (39.9)	20.8 (45.9)
		4.71 (6.32)	28 (20.7)	10 (7.38)	10	**1FT7086-5AH7■-1 ■ ■ ■**	5	63.6 (56.3)	27.5 (60.6)
6000	36	0.88 (1.18)	2 (1.48)	1.4 (1.03)	2.1	**1FT7034-5AK7■-1 ■ ■ ■**	3	0.85 (0.75)	3.8 (8.38)
		1.07 (1.43)	3 (2.21)	1.7 (1.25)	2.4	**1FT7036-5AK7■-1 ■ ■ ■**	3	1.33 (1.18)	5.0 (11.0)
	48	1.26 (1.69)	3 (2.21)	2 (1.48)	3	**1FT7042-5AK7■-1 ■ ■ ■**	3	2.81 (2.49)	4.6 (10.1)
		1.41 (1.89) [3]	5 (3.69)	3 (2.21) [3]	3.6 [3]	**1FT7044-5AK7■-1 ■ ■ ■**	3	5.43 (4.81)	7.2 (15.9)
	63	2.13 (2.86) [4]	6 (4.43)	3.7 (2.73) [4]	5.9 [4]	**1FT7062-5AK7■-1 ■ ■ ■**	5	7.36 (6.51)	7.1 (15.7)
		2.59 (3.47) [3]	9 (6.64)	5.5 (4.06) [3]	6.1 [3]	**1FT7064-5AK7■-1 ■ ■ ■**	5	11.9 (10.5)	9.7 (21.4)

With DRIVE-CLiQ interface:						
	Flange:	Classic (compatible with 1FT6/1FK7)		1		
		Recessed (more compact)		0		
	Encoder:	AS24DQI encoder	RJ45 signal connection		B	
			M17 signal connection		K	
		AM24DQI encoder	RJ45 signal connection		C	
			M17 signal connection		L	
Without DRIVE-CLiQ interface:						
	Flange:	Classic (compatible with 1FT6/1FK7)		4		
		Recessed (more compact)		5		
	Encoder:	IC2048S/R encoder	M23 signal connection		N	
		AM2048S/R encoder	M23 signal connection		M	

Shaft extension:	**Shaft and flange accuracy:**	**Holding brake:**	
Feather key and keyway	Tolerance N	Without	A
Feather key and keyway	Tolerance N	With	B
Feather key and keyway	Tolerance R	Without	D
Feather key and keyway	Tolerance R	With	E
Plain shaft	Tolerance N	Without	G
Plain shaft	Tolerance N	With	H
Plain shaft	Tolerance R	Without	K
Plain shaft	Tolerance R	With	L

Vibration severity:	**Degree of protection:**	
Grade A	IP64	0
Grade A	IP65	1
Grade A	IP67	2
Grade R	IP64	3
Grade R	IP65	4
Grade R	IP67	5

For footnotes, see next page.

© Siemens AG 2017

Motor type (repeated)	Efficiency 5)	Stall current	Calculated power P_{calc} 9)	SINAMICS S120 Motor Module: Rated output current 6)	Booksize format, Internal air cooling (For other components, see SINAMICS S120 drive system)	Power cable with complete shield, Motor connection (and brake connection) via power connector: Power connector	Cable cross-section 7)	Pre-assembled cable
	η	I_0 at M_0 ΔT = 100 K	P_{calc} at M_0 ΔT=100 K	I_{rated}				
	%	A	kW (hp)	A	Article No.	Size	mm²	Article No.
1FT7046-5AH7...	90	8.1	3.3 (4.43)	9	**6SL3120-■TE21-0AD.**	1	4 × 1.5	**6FX■002-5■N06-....**
1FT7066-5AH7...	90	13.6	5.65 (7.58)	18	**6SL3120-■TE21-8AD.**	1	4 × 1.5	**6FX■002-5■N06-....**
1FT7082-5AH7...	93	12.3	6.13 (8.22)	18	**6SL3120-■TE21-8AD.**	1	4 × 1.5	**6FX■002-5■N06-....**
1FT7084-5AH7...	93	15.6	9.42 (12.6)	18	**6SL3120-■TE21-8AD.**	1.5	4 × 2.5	**6FX■002-5■N36-....**
1FT7086-5AH7...	91	22.4	13.19 (17.7)	30	**6SL3120-1TE23-0AD.**	1.5	4 × 4	**6FX■002-5■N46-....**
1FT7034-5AK7...	90	2.7	1.26 (1.69)	3	**6SL3120-■TE13-0AD.**	1	4 × 1.5	**6FX■002-5■N06-....**
1FT7036-5AK7...	90	4.0	1.88 (2.52)	5	**6SL3120-■TE15-0AD.**	1	4 × 1.5	**6FX■002-5■N06-....**
1FT7042-5AK7...	91	3.9	1.88 (2.52)	5	**6SL3120-■TE15-0AD.**	1	4 × 1.5	**6FX■002-5■N06-....**
1FT7044-5AK7...	91	5.7	3.14 (4.21)	9	**6SL3120-■TE21-0AD.**	1	4 × 1.5	**6FX■002-5■N06-....**
1FT7062-5AK7...	90	8.4	3.77 (5.06)	9	**6SL3120-■TE21-0AD.**	1	4 × 1.5	**6FX■002-5■N06-....**
1FT7064-5AK7...	91	9	5.65 (7.58)	9	**6SL3120-■TE21-0AD.**	1	4 × 1.5	**6FX■002-5■N06-....**

Motor Module:	
Single Motor Module	**1**
Double Motor Module	**2**
Version status	

Power cable:	
MOTION-CONNECT 800PLUS	**8**
MOTION-CONNECT 500	**5**
Without brake cores	**C**
With brake cores 7) 8)	**D**
Length code	**....**

For information on the cables, refer to MOTION-CONNECT connection systems

8

1) These values refer to n = 3500 rpm.
2) These values refer to n = 4000 rpm.
3) These values refer to n = 4500 rpm.
4) These values refer to n = 5500 rpm.
5) Optimum efficiency in continuous duty.
6) With default setting of the pulse frequency.
7) The current carrying capacity of the power cables complies with EN 60204-1 for installation type C, for continuous duty at an ambient air temperature of 40 °C (104 °F).
8) Cable cross-section for brake connection 2 × 1.5 mm².
9) $P_{calc}\,[\text{kW}] = \frac{M_0\,[\text{Nm}] \times n_{rated}}{9550}$ $\quad P_{calc}\,[\text{hp}] = \frac{M_0\,[\text{lb}_f\text{-ft}] \times n_{rated}}{5250}$

© Siemens AG 2017

Selection and ordering data

Rated speed	Shaft height	Rated power	Static torque	Rated torque	Rated current	SIMOTICS S-1FT7 Compact synchronous motors	No. of pole pairs	Moment of inertia Rotor (without brake)	Weight (without brake)
n_{rated}	SH	P_{rated} at ΔT=100 K	M_0 at ΔT=100 K	M_{rated} at ΔT=100 K	I_{rated} at ΔT=100 K		p	J	m
rpm		kW (hp)	Nm (lb_f-ft)	Nm (lb_f-ft)	A	Article No.		10^{-4} kgm^2 (10^{-3} lb_f-in-s^2)	kg (lb)
SIMOTICS S-1FT7 Compact for DC link voltage 510 ... 720 V DC – Forced ventilation									
2000	80	5.0 (6.71)	27 (19.9)	24 (17.7)	13.5	**1FT7084-5SC7■-1 ■ ■ ■**	5	45 (39.8)	25 (55.1)
		6.7 (8.98)	36 (26.6)	32 (23.6)	17	**1FT7086-5SC7■-1 ■ ■ ■**	5	64 (56.7)	36 (79.4)
	100	11.7 (15.7)	65 (47.9)	56 (41.3)	29	**1FT7105-5SC7■-1 ■ ■ ■**	5	178 (158)	50 (110)
		15.3 (20.5)	91 (67.1)	73 (53.8)	33	**1FT7108-5SC7■-1 ■ ■ ■**	5	248 (220)	64 (141)
3000	80	7.2 (9.66)	27 (19.9)	23 (17.0)	18.5	**1FT7084-5SF7■-1 ■ ■ ■**	5	45 (39.8)	25 (55.1)
		9.1 (12.2)	36 (26.6)	29 (21.4)	24	**1FT7086-5SF7■-1 ■ ■ ■**	5	64 (56.7)	36 (79.4)
	100	15.1 (20.2)	65 (47.9)	48 (35.4)	35	**1FT7105-5SF7■-■ ■ ■ ■**	5	178 (158)	50 (110)
		18.8 (25.2)	91 (67.1)	60 (44.3)	38	**1FT7108-5SF7■-■ ■ ■ ■**	5	248 (220)	64 (141)
4500	80	9.9 (13.3)	27 (19.9)	21 (15.5)	24.5	**1FT7084-5SH7■-1 ■ ■ ■**	5	45 (39.8)	25 (55.1)
		11.8 (15.8)	36 (26.6)	25 (18.4)	25	**1FT7086-5SH7■-1 ■ ■ ■**	5	64 (56.7)	36 (79.4)

With DRIVE-CLiQ interface:					
	Flange:	Classic (compatible with 1FT6/1FK7)		1	
		Recessed (more compact)		0	
	Encoder:	AS24DQI encoder	RJ45 signal connection		B
		AM24DQI encoder	RJ45 signal connection		C
Without DRIVE-CLiQ interface:					
	Flange:	Classic (compatible with 1FT6/1FK7)		4	
		Recessed (more compact)		5	
	Encoder:	IC2048S/R encoder	M23 signal connection		N
		AM2048S/R encoder	M23 signal connection		M
Connector outlet direction:		Connector sizes 1 and 1.5	Rotatable connector	1	
		Connector size 3 [1]	Transverse right	1	
			Transverse left	2	
			Axial NDE	3	
			Axial DE	4	
Terminal box/ cable entry: [1]		Top/transverse from right		5	
		Top/transverse from left		6	
		Top/axial from NDE		7	
		Top/axial from DE		8	

Shaft extension:	**Shaft and flange accuracy:**	**Holding brake:**	
Feather key	Tolerance N	Without	A
Feather key	Tolerance N	With	B
Feather key	Tolerance R	Without	D
Feather key	Tolerance R	With	E
Plain shaft	Tolerance N	Without	G
Plain shaft	Tolerance N	With	H
Plain shaft	Tolerance R	Without	K
Plain shaft	Tolerance R	With	L

Vibration severity:	**Degree of protection:** [2]	
Grade A	IP64	0
Grade A	IP65	1
Grade R	IP64	3
Grade R	IP65	4

For footnotes, see next page.

© Siemens AG 2017

Motor type (repeated)	Efficiency 3)	Stall current	Calculated power P_{calc} 7)	SINAMICS S120 Motor Module: Rated output current 4)	Booksize format, Internal air cooling (For other components, see SINAMICS S120 drive system)	Power cable with complete shield, Motor connection (and brake connection) via power connector: Power connector	Cable cross-section 5)	Pre-assembled cable
	η	I_0 at M_0 ΔT = 100 K	P_{calc} at M_0 ΔT=100 K	I_{rated}				
	%	A	kW (hp)	A	Article No.	Size	mm²	Article No.
1FT7084-5SC7...	93	15	5.7 (7.64)	18	**6SL3120-■TE21-8AD.**	1.5	4 × 1.5	**6FX■002-5■N26-....**
1FT7086-5SC7...	93	19.5	7.5 (10.1)	30	**6SL3120-1TE23-0AD.**	1.5	4 × 2.5	**6FX■002-5■N36-....**
1FT7105-5SC7...	93	31	13.6 (18.2)	45	**6SL3120-1TE24-5AA.**	1.5	4 × 6	**6FX■002-5■N54-....**
1FT7108-5SC7...	93	39	19.1 (25.6)	45	**6SL3120-1TE24-5AA.**	1.5	4 × 10	**6FX■002-5■N64-....**
1FT7084-5SF7...	94	21	8.5 (11.4)	30	**6SL3120-1TE23-0AD.**	1.5	4 × 2.5	**6FX■002-5■N36-....**
1FT7086-5SF7...	93	29	11.3 (15.2)	30	**6SL3120-1TE23-0AD.**	1.5	4 × 6	**6FX■002-5■N56-....**
1FT7105-5SF7...	94	45	20.4 (27.4)	45	**6SL3120-1TE24-5AA.**	3	4 × 10	**6FX■002-5■S14-....**
1FT7108-5SF7...	94	57	28.6 (38.4)	60	**6SL3120-1TE26-0AA.**	3	4 × 16	**6FX■002-5■S23-....**
1FT7084-5SH7...	94	30.5	12.7 (17.0)	30	**6SL3120-1TE23-0AD.**	1.5	4 × 6	**6FX■002-5■N56-....**
1FT7086-5SH7...	93	34	17.0 (22.8)	45	**6SL3120-1TE24-5AA.**	1.5	4 × 6	**6FX■002-5■N54-....**

Motor Module:	
Single Motor Module	**1**
Double Motor Module	**2**
Version status	

Power cable:	
MOTION-CONNECT 800PLUS	**8**
MOTION-CONNECT 500	**5**
Without brake cores	**C**
With brake cores 6)	**D**
Length code	**....**

For information on the cables, refer to MOTION-CONNECT connection systems

8

1) Connector size 3 not rotatable. An alternative terminal box can be selected with connector size 3 only.
2) The degree of protection refers to the motor. The built-in fan meets the requirements of degree of protection IP54.
3) Optimum efficiency in continuous duty.
4) With default setting of the pulse frequency.
5) The current carrying capacity of the power cable complies with EN 60204-1 for installation type C, for continuous duty at an ambient air temperature of 40 °C (104 °F).
6) Cable cross-section for brake connection 2 × 1.5 mm².
7) $P_{calc}\,[\text{kW}] = \frac{M_0\,[\text{Nm}] \times n_{rated}}{9550}$ $\quad P_{calc}\,[\text{hp}] = \frac{M_0\,[\text{lb}_f\text{-ft}] \times n_{rated}}{5250}$

© Siemens AG 2017

Selection and ordering data

Rated speed	Shaft height	Rated power	Static torque	Rated torque	Rated current	SIMOTICS S-1FT7 Compact synchronous motors	No. of pole pairs	Moment of inertia Rotor (without brake)	Weight (without brake)
n_{rated}	SH	P_{rated} at ΔT=100 K	M_0 at ΔT=100 K	M_{rated} at ΔT=100 K	I_{rated} at ΔT=100 K		p	J	m
rpm		kW (hp)	Nm (lb_f-ft)	Nm (lb_f-ft)	A	Article No.		10^{-4} kgm^2 (10^{-3} lb_f-in-s^2)	kg (lb)
SIMOTICS S-1FT7 Compact for DC link voltage 510 ... 720 V DC – Water cooling									
1500	100	7.9 (10.6)	50 (36.9)	50 (36.9)	20.3	**1FT7102-5WB7■-1 ■ ■ ■**	5	98.9 (87.5)	36.6 (80.7)
		14.1 (18.9)	90 (66.4)	90 (66.4)	29.5	**1FT7105-5WB7■-1 ■ ■ ■**	5	191 (169)	54.8 (121)
		19.6 (26.3)	125 (92.2)	125 (92.2)	40.3	**1FT7108-5WB7■-1 ■ ■ ■**	5	265 (235)	68.6 (151)
2000	80	4.4 (5.90)	21 (15.5)	21 (15.5)	11	**1FT7082-5WC7■-1 ■ ■ ■**	5	28.9 (25.6)	20.7 (45.6)
		7.33 (9.83)	35 (25.8)	35 (25.8)	17	**1FT7084-5WC7■-1 ■ ■ ■**	5	48.3 (42.6)	27.5 (60.6)
		10.5 (14.1)	50 (36.9)	50 (36.9)	24	**1FT7086-5WC7■-1 ■ ■ ■**	5	67.8 (60.0)	34.1 (75.2)
	100	10.4 (13.9)	50 (36.9)	49.5 (36.5)	29.3	**1FT7102-5WC7■-1 ■ ■ ■**	5	98.9 (87.5)	36.6 (80.7)
		18.8 (25.2)	90 (66.4)	90 (66.4)	40.8	**1FT7105-5WC7■-1 ■ ■ ■**	5	191 (169)	54.8 (121)
		26.2 (35.1)	125 (92.2)	125 (92.2)	47.5	**1FT7108-5WC7■-■ ■ ■**	5	265 (235)	69.6 (153)

With DRIVE-CLiQ interface:					
	Flange:	Classic (compatible with 1FT6/1FK7)		1	
		Recessed (more compact)		0	
	Encoder:	AS24DQI encoder	RJ45 signal connection		B
			M17 signal connection		K
		AM24DQI encoder	RJ45 signal connection		C
			M17 signal connection		L
Without DRIVE-CLiQ interface:					
	Flange:	Classic (compatible with 1FT6/1FK7)		4	
		Recessed (more compact)		5	
	Encoder:	IC2048S/R encoder	M23 signal connection		N
		AM2048S/R encoder	M23 signal connection		M

Connector outlet direction:	Connector sizes 1 and 1.5	Rotatable connector	1
	Connector size 3 [1]	Transverse right	1
		Transverse left	2
		Axial NDE	3
		Axial DE	4
Terminal box/ cable entry: [1]	Top/transverse from right		5
	Top/transverse from left		6
	Top/axial from NDE		7
	Top/axial from DE		8

Shaft extension:	**Shaft and flange accuracy:**	**Holding brake:**	
Feather key and keyway	Tolerance N	Without	A
Feather key and keyway	Tolerance N	With	B
Feather key and keyway	Tolerance R	Without	D
Feather key and keyway	Tolerance R	With	E
Plain shaft	Tolerance N	Without	G
Plain shaft	Tolerance N	With	H
Plain shaft	Tolerance R	Without	K
Plain shaft	Tolerance R	With	L

Vibration severity:	**Degree of protection:**	
Grade A	IP64	0
Grade A	IP65	1
Grade A	IP67	2
Grade R	IP64	3
Grade R	IP65	4
Grade R	IP67	5

For footnotes, see next page.

© Siemens AG 2017

Motor type (repeated)	Efficiency [2]	Stall current	Calculated power P_{calc} [6]	SINAMICS S120 Motor Module: Rated output current [3]	SINAMICS S120 Motor Module: Booksize format, Internal air cooling. For other components, see SINAMICS S120 drive system	Power cable with complete shield, Motor connection (and brake connection) via power connector: Power connector	Cable cross-section [4]	Pre-assembled cable
	η	I_0 at M_0 ΔT = 100 K	P_{calc} at M_0 ΔT=100 K	I_{rated}				
	%	A	kW (hp)	A	Article No.	Size	mm²	Article No.
1FT7102-5WB7...	93	17.8	7.9 (10.6)	18	**6SL3120-■TE21-8AD.**	1.5	4 × 2.5	**6FX■002-5■N36-....**
1FT7105-5WB7...	94	28	14.1 (18.9)	30	**6SL3120-1TE23-0AD.**	1.5	4 × 4	**6FX■002-5■N46-....**
1FT7108-5WB7...	94	39	19.6 (26.3)	45	**6SL3120-1TE24-5AA.**	1.5	4 × 10	**6FX■002-5■N64-....**
1FT7082-5WC7...	93	10.7	4.4 (5.90)	18	**6SL3120-■TE21-8AD.**	1.5	4 × 1.5	**6FX■002-5■N26-....**
1FT7084-5WC7...	94	16.5	7.3 (9.79)	18	**6SL3120-■TE21-8AD.**	1.5	4 × 2.5	**6FX■002-5■N36-....**
1FT7086-5WC7...	94	23	10.5 (14.1)	30	**6SL3120-1TE23-0AD.**	1.5	4 × 4	**6FX■002-5■N46-....**
1FT7102-5WC7...	94	25.5	10.5 (14.1)	30	**6SL3120-1TE23-0AD.**	1.5	4 × 4	**6FX■002-5■N46-....**
1FT7105-5WC7...	94	39	18.8 (25.2)	45	**6SL3120-1TE24-5AA.**	1.5	4 × 10	**6FX■002-5■N64-....**
1FT7108-5WC7...	95	45.3	26.2 (35.1)	45	**6SL3120-1TE24-5AA.**	3	4 × 10	**6FX■002-5■S14-....**

Motor Module:	
Single Motor Module	**1**
Double Motor Module	**2**
Version status	

Power cable:	
MOTION-CONNECT 800PLUS	**8**
MOTION-CONNECT 500	**5**
Without brake cores	**C**
With brake cores [5]	**D**
Length code	**....**

For information on the cables, refer to MOTION-CONNECT connection systems

8

[1] Connector size 3 not rotatable. An alternative terminal box can be selected with connector size 3 only.
[2] Optimum efficiency in continuous duty.
[3] With default setting of the pulse frequency.
[4] The current carrying capacity of the power cables complies with EN 60204-1 for installation type C, for continuous duty at an ambient air temperature of 40 °C (104 °F).
[5] Cable cross-section for brake connection 2 × 1.5 mm².
[6] $P_{calc}\,[\text{kW}] = \frac{M_0\,[\text{Nm}] \times n_{rated}}{9550}$ $\quad P_{calc}\,[\text{hp}] = \frac{M_0\,[\text{lb}_f\text{-ft}] \times n_{rated}}{5250}$

© Siemens AG 2017

Selection and ordering data

Rated speed	Shaft height	Rated power	Static torque	Rated torque	Rated current	SIMOTICS S-1FT7 Compact synchronous motors	No. of pole pairs	Moment of inertia Rotor (without brake)	Weight (without brake)
n_{rated}	SH	P_{rated} at ΔT=100 K	M_0 at ΔT=100 K	M_{rated} at ΔT=100 K	I_{rated} at ΔT=100 K		p	J	m
rpm		kW (hp)	Nm (lb_f-ft)	Nm (lb_f-ft)	A	Article No.		10^{-4} kgm^2 (10^{-3} lb_f-in-s^2)	kg (lb)
SIMOTICS S-1FT7 Compact for DC link voltage 510 ... 720 V DC – Water cooling									
3000	63	3.1 (4.16)	10 (7.38)	10 (7.38)	7.8	**1FT7062-5WF7■-1 ■ ■ ■**	5	8.1 (7.17)	11 (24.3)
		5 (6.71)	16 (11.8)	16 (11.8)	12.5	**1FT7064-5WF7■-1 ■ ■ ■**	5	12.9 (11.4)	13.7 (30.2)
		6.2 (8.31)	20 (14.8)	19.6 (14.5)	14.4	**1FT7066-5WF7■-1 ■ ■ ■**	5	17.7 (15.7)	16.3 (35.9)
		9.3 (12.5)	30 (22.1)	29.5 (21.8)	19.6	**1FT7068-5WF7■-1 ■ ■ ■**	5	24.8 (22.0)	20.1 (44.3)
	80	6.4 (8.58)	21 (15.5)	20.5 (15.1)	16	**1FT7082-5WF7■-1 ■ ■ ■**	5	28.9 (25.6)	20.7 (45.6)
		11 (14.8)	35 (25.8)	35 (25.8)	24.2	**1FT7084-5WF7■-1 ■ ■ ■**	5	48.3 (42.8)	27.5 (60.6)
		15.4 (20.7)	50 (36.9)	49 (36.1)	36	**1FT7086-5WF7■-1 ■ ■ ■**	5	67.8 (60.0)	34.1 (75.2)
	100	14.3 (19.2)	50 (36.9)	45.5 (33.6)	38.8	**1FT7102-5WF7■-1 ■ ■ ■**	5	98.9 (87.5)	36.6 (80.7)
		24.8 (33.3)	90 (66.4)	79 (58.3)	49.5	**1FT7105-5WF7■-■ ■ ■ ■**	5	164 (145)	55.9 (123)
		34.2 (45.9)	125 (92.2)	109 (80.4)	60	**1FT7108-5WF7■-■ ■ ■ ■**	5	265 (235)	69.6 (153)
4500	63	9.1 (12.2)	20 (14.8)	19.4 (14.3)	20.8	**1FT7066-5WH7■-1 ■ ■ ■**	5	17.7 (15.7)	16.3 (35.9)
	80	8.95 (12.0)	21 (15.5)	19 (14.0)	23.9	**1FT7082-5WH7■-1 ■ ■ ■**	5	28.9 (25.6)	20.7 (45.6)
		15.08 (20.2)	35 (25.8)	32 (23.6)	34.5	**1FT7084-5WH7■-1 ■ ■ ■**	5	48.3 (42.8)	27.5 (60.6)
		20.3 (27.2)	50 (36.9)	43 (31.7)	38	**1FT7086-5WH7■-1 ■ ■ ■**	5	67.8 (60.0)	34.1 (75.2)
6000	63	5.8 (7.78)	10 (7.38)	9.2 (6.79)	12.7	**1FT7062-5WK7■-1 ■ ■ ■**	5	8.1 (7.17)	11 (24.3)
		8.9 (11.9)	16 (11.8)	14.2 (10.5)	20	**1FT7064-5WK7■-1 ■ ■ ■**	5	12.9 (11.4)	13.7 (30.2)

With DRIVE-CLiQ interface:				
Flange:	Classic (compatible with 1FT6/1FK7)		1	
	Recessed (more compact)		0	
Encoder:	AS24DQI encoder	RJ45 signal connection		B
		M17 signal connection		K
	AM24DQI encoder	RJ45 signal connection		C
		M17 signal connection		L
Without DRIVE-CLiQ interface:				
Flange:	Classic (compatible with 1FT6/1FK7)		4	
	Recessed (more compact)		5	
Encoder:	IC2048S/R encoder	M23 signal connection		N
	AM2048S/R encoder	M23 signal connection		M

Connector outlet direction:	Connector sizes 1 and 1.5	Rotatable connector	1
	Connector size 3 [1]	Transverse right	1
		Transverse left	2
		Axial NDE	3
		Axial DE	4
Terminal box/ cable entry: [1]	Top/transverse from right		5
	Top/transverse from left		6
	Top/axial from NDE		7
	Top/axial from DE		8

Shaft extension:	**Shaft and flange accuracy:**	**Holding brake:**	
Feather key and keyway	Tolerance N	Without	A
Feather key and keyway	Tolerance N	With	B
Feather key and keyway	Tolerance R	Without	D
Feather key and keyway	Tolerance R	With	E
Plain shaft	Tolerance N	Without	G
Plain shaft	Tolerance N	With	H
Plain shaft	Tolerance R	Without	K
Plain shaft	Tolerance R	With	L

Vibration severity:	**Degree of protection:**	
Grade A	IP64	0
Grade A	IP65	1
Grade A	IP67	2
Grade R	IP64	3
Grade R	IP65	4
Grade R	IP67	5

For footnotes, see next page.

© Siemens AG 2017

Motor type (repeated)	Efficiency 2)	Stall current	Calculated power P_{calc} 7)	SINAMICS S120 Motor Module: Rated output current 3)	Booksize format, Internal air cooling (For other components, see SINAMICS S120 drive system)	Power cable with complete shield, Motor connection (and brake connection) via power connector: Power connector	Cable cross-section 4)	Pre-assembled cable
	η	I_0 at M_0 ΔT = 100 K	P_{calc} at M_0 ΔT=100 K	I_{rated}				
	%	A	kW (hp)	A	Article No.	Size	mm²	Article No.
1FT7062-5WF7...	91	7.4	3.1 (4.16)	9	**6SL3120-■TE21-0AD.**	1	4 × 1.5	**6FX■002-5■N06-....**
1FT7064-5WF7...	91	11.9	5.0 (6.71)	18	**6SL3120-■TE21-8AD.**	1	4 × 1.5	**6FX■002-5■N06-....**
1FT7066-5WF7...	91	14	6.3 (8.45)	18	**6SL3120-■TE21-8AD.**	1	4 × 1.5	**6FX■002-5■N06-....**
1FT7068-5WF7...	93	19	9.4 (12.6)	18 5)	**6SL3120-■TE21-8AD.**	1	4 × 2.5	**6FX■002-5■N16-....**
1FT7082-5WF7...	94	16	6.6 (8.85)	18	**6SL3120-■TE21-8AD.**	1.5	4 × 2.5	**6FX■002-5■N36-....**
1FT7084-5WF7...	94	23	11.0 (14.8)	30	**6SL3120-1TE23-0AD.**	1.5	4 × 4	**6FX■002-5■N46-....**
1FT7086-5WF7...	94	34	15.7 (21.1)	45	**6SL3120-1TE24-5AA.**	1.5	4 × 6	**6FX■002-5■N54-....**
1FT7102-5WF7...	95	40	15.7 (21.1)	45	**6SL3120-1TE24-5AA.**	1.5	4 × 10	**6FX■002-5■N64-....**
1FT7105-5WF7...	94	53.2	28.3 (38.0)	60	**6SL3120-1TE26-0AA.**	3	4 × 16	**6FX■002-5■S23-....**
1FT7108-5WF7...	95	65	39.3 (52.7)	85	**6SL3120-1TE28-5AA.**	3	4 × 16	**6FX■002-5■G23-....**
1FT7066-5WH7...	91	19.7	9.4 (12.6)	30	**6SL3120-1TE23-0AD.**	1	4 × 2.5	**6FX■002-5■N16-....**
1FT7082-5WH7...	94	24	9.9 (13.3)	30	**6SL3120-1TE23-0AD.**	1.5	4 × 4	**6FX■002-5■N46-....**
1FT7084-5WH7...	94	34.3	16.5 (22.1)	45	**6SL3120-1TE24-5AA.**	1.5	4 × 6	**6FX■002-5■N54-....**
1FT7086-5WH7...	94	40.5	23.6 (31.6)	45	**6SL3120-1TE24-5AA.**	1.5	4 × 10	**6FX■002-5■N64-....**
1FT7062-5WK7...	92	12.5	6.3 (8.45)	18	**6SL3120-■TE21-8AD.**	1	4 × 1.5	**6FX■002-5■N06-....**
1FT7064-5WK7...	92	20.2	10.1 (13.5)	30	**6SL3120-1TE23-0AD.**	1	4 × 2.5	**6FX■002-5■N16-....**

Motor Module:	
Single Motor Module	**1**
Double Motor Module	**2**
Version status	

Power cable:	
MOTION-CONNECT 800PLUS	**8**
MOTION-CONNECT 500	**5**
Without brake cores	**C**
With brake cores 6)	**D**
Length code	**....**

For information on the cables, refer to MOTION-CONNECT connection systems

8

1) Connector size 3 is not rotatable. An alternative terminal box can be selected with connector size 3 only.

2) Optimum efficiency in continuous duty.

3) With default setting of the pulse frequency.

4) The current carrying capacity of the power cables complies with EN 60204-1 for installation type C, for continuous duty at an ambient air temperature of 40 °C (104 °F).

5) With the specified Motor Module, the motor cannot be fully utilized at M_0 with a winding temperature rise of ΔT = 100 K.
If a Motor Module with a higher rating is used, you must check whether the specified power cable can be connected to the larger Motor Module.

6) Cable cross-section for brake connection 2 × 1.5 mm².

7) $P_{calc}\,[\text{kW}] = \dfrac{M_0\,[\text{Nm}] \times n_{rated}}{9550}$ $\quad P_{calc}\,[\text{hp}] = \dfrac{M_0\,[\text{lb}_f\text{-ft}] \times n_{rated}}{5250}$

© Siemens AG 2017

SIMOTICS S-1FT7 High Dynamic – Forced ventilation/Water cooling

Selection and ordering data

Rated speed	Shaft height	Rated power	Static torque	Rated torque	Rated current	SIMOTICS S-1FT7 High Dynamic synchronous motors	No. of pole pairs	Moment of inertia Rotor (without brake)	Weight (without brake)
n_{rated}	SH	P_{rated} at ΔT=100 K	M_0 at ΔT=100 K	M_{rated} at ΔT=100 K	I_{rated} at ΔT=100 K		p	J	m
rpm		kW (hp)	Nm (lb_f-ft)	Nm (lb_f-ft)	A	Article No.		10^{-4} kgm^2 (10^{-3} lb_f-in-s^2)	kg (lb)
SIMOTICS S-1FT7 High Dynamic for DC link voltage 510 ... 720 V DC – Forced ventilation									
3000	63	3.8 (5.10)	14 (10.3)	12 (8.85)	10.5	**1FT7065-7S F7■-1 ■ ■ ■**	5	6.4 (5.66)	19 (41.9)
		4.4 (5.90)	17 (12.5)	14 (10.3)	13	**1FT7067-7S F7■-1 ■ ■ ■**	5	8.3 (7.35)	23 (50.7)
	80	7.2 (9.66)	34 (25.1)	23 (17.0)	20	**1FT7085-7S F7■-1 ■ ■ ■**	5	20.7 (18.3)	34 (75.0)
		10.4 (13.9)	48 (35.4)	33 (24.3)	29	**1FT7087-7S F7■-1 ■ ■ ■**	5	27.4 (24.3)	42 (92.6)
4500	63	5.2 (6.97)	14 (10.3)	11 (8.11)	13.5	**1FT7065-7SH7■-1 ■ ■ ■**	5	6.4 (5.66)	19 (41.9)
		6.1 (8.18)	17 (12.5)	13 (9.59)	15	**1FT7067-7SH7■-1 ■ ■ ■**	5	8.3 (7.35)	23 (50.7)
	80	8.2 (11.0)	34 (25.1)	17.5 (12.9)	22.5	**1FT7085-7SH7■-1 ■ ■ ■**	5	20.7 (18.3)	34 (75.0)
		10.8 (14.5)	48 (35.4)	23 (17.0)	24	**1FT7087-7SH7■-■ ■ ■ ■**	5	27.4 (24.3)	43 (94.8)
SIMOTICS S-1FT7 High Dynamic for DC link voltage 510 ... 720 V DC – Water cooling									
3000	63	5.7 (7.64)	19 (14.0)	18 (13.3)	15	**1FT7065-7WF7■-1 ■ ■ ■**	5	6.4 (5.66)	16 (35.3)
		7.4 (9.92)	25 (18.4)	23.5 (17.3)	21	**1FT7067-7WF7■-1 ■ ■ ■**	5	8.3 (7.35)	22 (48.5)
	80	11.9 (16.0)	43 (31.7)	38 (28.0)	32	**1FT7085-7WF7■-1 ■ ■ ■**	5	20.7 (18.3)	32 (70.6)
		16.0 (21.5)	61 (45.0)	51 (37.6)	43	**1FT7087-7WF7■-■ ■ ■ ■**	5	27.4 (24.3)	41 (90.4)
4500	63	7.8 (10.5)	19 (14.0)	16.5 (12.2)	20	**1FT7065-7WH7■-1 ■ ■ ■**	5	6.4 (5.66)	16 (35.3)
		10.4 (14.0)	25 (18.4)	22 (16.2)	25	**1FT7067-7WH7■-1 ■ ■ ■**	5	8.3 (7.35)	22 (48.5)
	80	15.6 (20.9)	43 (31.7)	33 (24.3)	48	**1FT7085-7WH7■-■ ■ ■ ■**	5	20.7 (18.3)	32 (70.6)
		21.7 (29.1)	61 (45.0)	46 (33.9)	53	**1FT7087-7WH7■-■ ■ ■ ■**	5	27.4 (24.3)	41 (90.4)

With DRIVE-CLiQ interface:					
Flange:	Classic (compatible with 1FT6/1FK7)		**1**		
	Recessed (more compact)		**0**		
Encoder:	AS24DQI encoder	RJ45 signal connection		**B**	
		M17 signal connection (Only for water cooling)		**K**	
	AM24DQI encoder	RJ45 signal connection		**C**	
		M17 signal connection (Only for water cooling)		**L**	
Without DRIVE-CLiQ interface:					
Flange:	Classic (compatible with 1FT6/1FK7)		**4**		
	Recessed (more compact)		**5**		
Encoder:	IC2048S/R encoder	M23 signal connection		**N**	
	AM2048S/R encoder	M23 signal connection		**M**	
Connector outlet direction:	Connector sizes 1 and 1.5	Rotatable connector		**1**	
	Connector size 3 [1]	Transverse right		**1**	
		Transverse left		**2**	
		Axial NDE		**3**	
		Axial DE		**4**	
Terminal box/ cable entry: [1]	Top/transverse from right			**5**	
	Top/transverse from left			**6**	
	Top/axial from NDE			**7**	
	Top/axial from DE			**8**	

Shaft extension:	**Shaft and flange accuracy:**	**Holding brake:**	
Feather key and keyway	Tolerance N	Without	**A**
Feather key and keyway	Tolerance N	With	**B**
Feather key and keyway	Tolerance R	Without	**D**
Feather key and keyway	Tolerance R	With	**E**
Plain shaft	Tolerance N	Without	**G**
Plain shaft	Tolerance N	With	**H**
Plain shaft	Tolerance R	Without	**K**
Plain shaft	Tolerance R	With	**L**

Vibration severity:	**Degree of protection:**	
Grade A	IP64	**0**
Grade A	IP65	**1**
Grade A	IP67 (only for water cooling)	**2**
Grade R	IP64	**3**
Grade R	IP65	**4**
Grade R	IP67 (only for water cooling)	**5**

For footnotes, see next page.

© Siemens AG 2017

Motor type (repeated)	Efficiency [2]	Stall current	Calculated power P_{calc} [6]	SINAMICS S120 Motor Module: Rated output current [3]	Booksize format, Internal air cooling (For other components, see SINAMICS S120 drive system)	Power cable with complete shield, Motor connection (and brake connection) via power connector: Power connector	Cable cross-section [4]	Pre-assembled cable
	η	I_0 at M_0 ΔT = 100 K	P_{calc} at M_0 ΔT=100 K	I_{rated}				
	%	A	kW (hp)	A	Article No.	Size	mm²	Article No.
1FT7065-7SF7...	92	12	4.4 (5.90)	18	**6SL3120-■TE21-8AD.**	1.5	4 × 1.5	**6FX■002-5■ N26-....**
1FT7067-7SF7...	94	15	5.3 (7.11)	18	**6SL3120-■TE21-8AD.**	1.5	4 × 1.5	**6FX■002-5■ N26-....**
1FT7085-7SF7...	92	28	10.7 (14.3)	30	**6SL3120-1TE23-0AD.**	1.5	4 × 4	**6FX■002-5■ N46-....**
1FT7087-7SF7...	93	40	15.1 (20.3)	45	**6SL3120-1TE24-5AA.**	1.5	4 × 10	**6FX■002-5■ N64-....**
1FT7065-7SH7...	92	16	6.6 (8.85)	18	**6SL3120-■TE21-8AD.**	1.5	4 × 2.5	**6FX■002-5■ N36-....**
1FT7067-7SH7...	94	19	8.0 (10.7)	30	**6SL3120-1TE23-0AD.**	1.5	4 × 2.5	**6FX■002-5■ N36-....**
1FT7085-7SH7...	92	40	16.0 (21.5)	45	**6SL3120-1TE24-5AA.**	1.5	4 × 10	**6FX■002-5■ N64-....**
1FT7087-7SH7...	93	45	22.6 (30.3)	45	**6SL3120-1TE24-5AA.**	3	4 × 10	**6FX■002-5■ S14-....**
1FT7065-7WF7...	92	16	6.0 (8.05)	18	**6SL3120-■TE21-8AD.**	1.5	4 × 2.5	**6FX■002-5■ N36-....**
1FT7067-7WF7...	94	22	7.9 (10.6)	30	**6SL3120-1TE23-0AD.**	1.5	4 × 4	**6FX■002-5■ N46-....**
1FT7085-7WF7...	93	36	13.5 (18.1)	45	**6SL3120-1TE24-5AA.**	1.5	4 × 6	**6FX■002-5■ N54-....**
1FT7087-7WF7...	94	51	19.2 (25.8)	60	**6SL3120-1TE26-0AA.**	3	4 × 16	**6FX■002-5■ S23-....**
1FT7065-7WH7...	92	22	9.0 (12.1)	30	**6SL3120-1TE23-0AD.**	1.5	4 × 4	**6FX■002-5■ N46-....**
1FT7067-7WH7...	94	28	11.8 (15.8)	30	**6SL3120-1TE23-0AD.**	1.5	4 × 4	**6FX■002-5■ N46-....**
1FT7085-7WH7...	94	58	20.3 (27.2)	60	**6SL3120-1TE26-0AA.**	3	4 × 16	**6FX■002-5■ S23-....**
1FT7087-7WH7...	94	67	28.7 (38.5)	85	**6SL3120-1TE28-5AA.**	3	4 × 25	**6FX■002-5DG33-....**

Motor Module:	
Single Motor Module	**1**
Double Motor Module	**2**
Version status	

Power cable:	
MOTION-CONNECT 800PLUS	**8**
MOTION-CONNECT 500	**5**
Without brake cores	**C**
With brake cores [5]	**D**
Length code	**....**

For information on the cables, refer to MOTION-CONNECT connection systems

8

[1] Connector size 3 is not rotatable. An alternative terminal box can be selected with connector size 3 only.

[2] Optimum efficiency in continuous duty.

[3] With default setting of the pulse frequency.

[4] The current carrying capacity of the power cable complies with EN 60204-1 for installation type C, for continuous duty at an ambient air temperature of 40 °C (104 °F).

[5] Cable cross-section for brake connection 2 × 1.5 mm².

[6] $P_{calc}\,[\text{kW}] = \frac{M_0\,[\text{Nm}] \times n_{rated}}{9550}$ $\quad P_{calc}\,[\text{hp}] = \frac{M_0\,[\text{lb}_f\text{-ft}] \times n_{rated}}{5250}$

© Siemens AG 2017

Overview

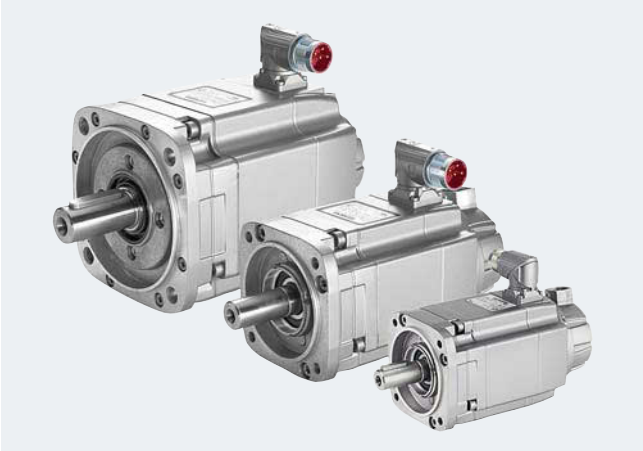

SIMOTICS S-1FK7 motors

SIMOTICS S-1FK7 motors are compact permanent-magnet synchronous motors. The available options, gearboxes and encoders, together with the expanded product range, mean that the SIMOTICS S-1FK7 motors can be perfectly adapted to any application. They therefore also satisfy the permanently increasing demands of state-of-the-art machine generations.

S-1FK7 motors can be combined with the SINAMICS S120 drive system to create a powerful system with high functionality. The integrated encoder systems for speed and position control can be selected depending on the application.

The motors are designed for operation without external cooling and the heat is dissipated through the motor surface. The S-1FK7 motors have a high overload capability.

Benefits

SIMOTICS S-1FK7 Compact motors:

- Space-saving installation due to extremely high power density
- For universal applications
- Wide range of motors

SIMOTICS S-1FK7 High Dynamic motors:

- Extremely high dynamic response thanks to the very low rotor moment of inertia

SIMOTICS S-1FK7 High Inertia motors:

- Robust closed-loop control properties for high or variable load moment of inertia
- Minimal optimization and commissioning overhead for the compensation of disturbances

Application

- Machine tools
- Robots and handling systems
- Wood, glass, ceramic, and stone working
- Packaging, plastic, and textile machines
- Printing machines
- Auxiliary axes

© Siemens AG 2017

Technical specifications

SIMOTICS S-1FK7 Compact/High Dynamic/High Inertia	
Motor type	Permanent-magnet synchronous motor
Magnet material	Rare-earth magnetic material
Cooling	Natural cooling
Temperature monitoring	Temperature sensor in stator winding
Stator winding insulation in accordance with EN 60034-1 (IEC 60034-1)	Temperature class 155 (F) for a winding temperature rise of ΔT = 100 K at an ambient temperature of 40 °C (104 °F).
Type of construction in accordance with EN 60034-7 (IEC 60034-7)	IM B5 (IM V1, IM V3)
Degree of protection in accordance with EN 60034-5 (IEC 60034-5) [1]	IP64 (optional IP65)
Shaft extension at DE in accordance with DIN 748-3 (IEC 60072-1)	Plain shaft, optional shaft with feather key (half-key balancing)
Shaft and flange accuracy in accordance with DIN 42955 (IEC 60072-1) [2]	Tolerance N
Vibration severity in accordance with EN 60034-14 (IEC 60034-14)	Grade A is maintained up to rated speed
Sound pressure level L_{pA} (1 m) in accordance with EN ISO 1680, max. Tolerance +3 dB	
• 1FK701 ... 1FK704	55 dB
• 1FK706	65 dB
• 1FK708/1FK710	70 dB
Connection	Connectors for signals and power
Paint finish [3]	Anthracite (RAL 7016)
2nd rating plate	Enclosed separately
Holding brake	Optional integrated holding brake (free of backlash, 24 V DC)
Certificate of suitability	cURus

Built-in encoder systems without DRIVE-CLiQ interface

Incremental encoder	
Encoder IC2048S/R	Incremental encoder sin/cos 1 V_{pp} 2048 S/R with C and D tracks
Absolute encoder	
Encoder AM2048S/R	Absolute encoder 2048 S/R, 4096 revolutions, multi-turn
Encoder AM512S/R	Absolute encoder 512 S/R, 4096 revolutions, multi-turn
Encoder AM16S/R	Absolute encoder 16 S/R, 4096 revolutions, multi-turn
Resolver	
Resolver Multi-pole	Multi-pole resolver (number of pole pairs corresponds to number of pole pairs of the motor)
Resolver 2-pole	2-pole resolver

Built-in encoder systems with DRIVE-CLiQ interface

Single-turn incremental encoder/absolute encoder [4]	
Encoder IC22DQ	Incremental encoder 22-bit + commutation position 11 bit
Encoder AS24DQI	Absolute encoder, single-turn, 24 bit
Encoder AS20DQI	Absolute encoder, single-turn, 20 bit
Multi-turn absolute encoders	
Encoder AM24DQI	Absolute encoder, 24 bit + 12 bit, multi-turn (traversing range 4096 revolutions)
Encoder AM20DQI/ AM20DQ	Absolute encoder, 20 bit + 12 bit, multi-turn (traversing range 4096 revolutions)
Encoder AM15DQ	Absolute encoder, 15 bit + 12 bit, multi-turn (traversing range 4096 revolutions)
Resolver	
Resolver R15DQ	15-bit resolver (internal multi-pole)
Resolver R14DQ	14-bit resolver (internal 2-pole)

S/R = signals/revolution

[1] 1FK701 can be supplied only with IP54 degree of protection.

[2] Shaft extension run-out, concentricity of centering ring and shaft, and perpendicularity of flange to shaft.

[3] 1FK702 without a paint finish as standard.

[4] The single-turn absolute encoder is used for the previous incremental encoders.

© Siemens AG 2017

Options

Order code	Description
J..	Mounting of SP+ planetary gearbox (see SIMOTICS S geared motors)
M03	Version for potentially explosive atmospheres Zone 2 in accordance with EN 50021/IEC 60079-15
M39	Version for potentially explosive atmospheres Zone 22 in accordance with EN 50281/IEC 61241-1
N05	Alternative shaft geometry
N16	Version for increased chemical resistance
N24	Reinforced brake [1]
Q31	Metal rating plate instead of adhesive label
V..	Mounting of planetary gearbox LP+ (see SIMOTICS S geared motors)
	Paint finish
K23	Special paint finish for "Worldwide" climate group: Primer and paint finish: Anthracite RAL 7016 [1]
K23+X..	Special paint finish for "Worldwide" climate group: Primer and other paint finish can be selected from X01 to X27
K24	Primer (without paint finish) [2]
X01	Paint finish: Jet black, matt RAL 9005 [3]
X02	Paint finish: Cream white RAL 9001 [3]
X03	Paint finish: Reseda green RAL 6011 [3]
X04	Paint finish: Pebble grey RAL 7032 [3]
X05	Paint finish: Sky blue RAL 5015 [3]
X06	Paint finish: Pale ivory RAL 1015 [3]
X08	Paint finish: Suitable for food grade applications White aluminum RAL 9006 [3]
X27	Paint finish: Dark pearl grey RAL 9023 [3]

-Z must be added to the Article No. to order a motor with options.

N24
Reinforced brake

When option "Reinforced brake" is selected for S-1FK7 motors, they are fitted with a holding brake that is stronger than the standard brake (cf. built-in holding brakes).

The option "Reinforced brake" is available for the following S-1FK7 motors:

- 1FK703.-2....-.... ;
- 1FK704.-2....-.... ; 1FK704.-3....-.... ;
- 1FK706.-2....-.... ; 1FK706.-3....-.... ;
- 1FK708.-2....-.... ; 1FK708.-3....-.... ; 1FK7086-4....-.... ;
- 1FK7101-2....-.... ; 1FK7101-3....-.... ;
- 1FK7103-2....-.... ; 1FK7103-3....-.... ;
- 1FK7105-2....-.... ; 1FK7105-3....-.... ;

Note:
Check whether the mechanical components of the customer's machine are capable of withstanding increased forces and torques in the event of an Emergency Off scenario before using motors with a reinforced brake.

M03
Version for potentially explosive atmospheres Zone 2 in accordance with IEC 60079-15

Combustible or potentially explosive gases or vapors occur only rarely or briefly in Zone 2 areas. This type of protection is designated as EEx nA II (non sparking).

The special conditions for operating S-1FK7 motors in Zone 2 areas, in particular the reduction in permissible operating speeds, are described in detail in Annex 610.40089.01 to the EC Declaration of Conformity 664.20038.02.

M39
Version for potentially explosive atmospheres Zone 22 in accordance with IEC 61241-1

Combustible or potentially explosive dust (non-conductive dust) occurs only rarely or briefly in Zone 22 areas. This type of protection is designated as Ex 3D T 160 °C (320 °F).

The special conditions for operating S-1FK7 motors in Zone 22 areas are described in detail in Annex 610.40090.01 to the EC Declaration of Conformity 664.20039.02.

Note regarding M03 and M39 options:
It is not always permissible to combine the option for potentially explosive atmospheres with other motor options. Please refer to the configuration manual for further information.

A version with a DRIVE-CLiQ interface on the motor is only possible for DQI encoders with RJ45 connector. DQ encoders with SMI cannot be combined with option M03 or M39.

[1] For the option "Reinforced brake", a brake-version 1FK7 motor must be ordered with B or H in the 15th data position.

[2] For the primer, the 1FK702 motors must be ordered with 0 or 2 in the 16th data position.

[3] For the paint finish, the 1FK702 motors must be ordered with 3 or 5 on the 16th data position.

© Siemens AG 2017

Options (continued)

N05
Alternative shaft geometry

S-1FK7 motors are delivered with a shaft extension that has an alternative shaft geometry (smaller dimensions).

- 1FK703: 11 × 23 mm (0.43 x 0.91 in)
- 1FK704: 14 × 30 mm (0.55 x 1.18 in)
- 1FK706: 19 × 40 mm (0.75 x 1.57 in)
- 1FK708: 24 × 50 mm (0.94 x 1.97 in)
- 1FK710: 32 × 58 mm (1.26 x 2.28 in)

Note:
The S-1FK7 motors with the option N05 are always shaft-compatible and flange-compatible with the corresponding S-1FT5 motors.
Exception: S-1FK706 motors are only shaft-compatible with S-1FT506... motors.

N16
Version for increased chemical resistance

Plants and systems in the foodstuff industry or machine tools are typical applications for these types of versions.

The PS Premium paint system of these motors is resistant to a broad range of commonly used cleaning agents and disinfectants.

Additional properties of motors equipped with option N16:

- 4-coat paint system
- Nickel-plated connector

Note:
The PS Premium paint system has been tested with a broad spectrum of industrial cleaning products with pH values ranging from 1.5 to 13. Resistance to the acidic and alkaline cleaning products used, as well as disinfectants, was verified by a material resistance test performed by ECOLAB Deutschland GmbH.

Option N16 is available for S-1FK703 to S-1FK710 motors with the following encoders:

- AM20DQI (1FK7...-.....-.R..)
  Absolute encoder, 20 bit + 12 bit
  Multi-turn with DRIVE-CLiQ interface
- AM24DQI (1FK7...-.....-.C..)
  Absolute encoder, 24 bit + 12 bit
  Multi-turn with DRIVE-CLiQ interface
- AS24DQI (1FK7...-.....-.B..)
  Absolute encoder, single-turn, 24 bit
  With DRIVE-CLiQ interface
- AM2048S/R (1FK7...-.....-.E..)
  Absolute encoder 2048 S/R,
  4096 revolutions, multi-turn, with EnDat interface
- Multi-pole resolver (1FK7...-.....-.S..)
- Two-pole resolver (1FK7...-.....-.T..)

Motors with DRIVE-CLiQ interface differ from the standard motor version in the following respects:

- The motor is 5 mm longer and has the same overall length as a motor without DRIVE-CLiQ interface
- The connector is implemented as a rotatable angle plug
- The height of the interfering contour relative to the motor center is 82 mm (3.23 in)
- A non-standard signal cable is required (see MOTION-CONNECT connection systems > Connection overview for SIMOTICS S-1FT7/S-1FK7 motors with RJ45 connection or with option N16 installed on SINAMICS S120)

© Siemens AG 2017

Selection and ordering data

Rated speed	Shaft height	Rated power	Static torque	Rated torque	Rated current	**SIMOTICS S-1FK7 Compact synchronous motors**	No. of pole pairs	Moment of inertia Rotor (without brake)	Weight (without brake)
n_{rated}	SH	P_{rated} at ΔT=100 K	M_0 at ΔT=100 K	M_{rated} at ΔT=100 K	I_{rated} at ΔT=100 K		p	J	m
rpm		kW (hp)	Nm (lb_f-ft)	Nm (lb_f-ft)	A	Article No.		10^{-4} kgm^2 (10^{-3} lb_f-in-s^2)	kg (lb)
SIMOTICS S-1FK7 Compact for DC link voltage 510 ... 720 V DC – Natural cooling									
2000	48	0.6 (0.80)	3.0 (2.21)	2.8 (2.07)	1.55	**1FK7042-2AC7■-1■■■**	4	2.9 (2.57)	4.6 (10.1)
	63	1.1 (1.48)	6.0 (4.43)	5.3 (3.91)	2.95	**1FK7060-2AC7■-1■■■**	4	7.7 (6.82)	7.1 (15.7)
		1.5 (2.01)	8.5 (6.27)	7.0 (5.16)	2.65	**1FK7062-2AC7■-1■■■**	4	11.2 (9.91)	9.1 (20.1)
		1.9 (2.55)	11.0 (8.11)	8.9 (6.56)	4.4	**1FK7063-2AC7■-1■■■**	4	14.7 (13.0)	11.1 (24.5)
	80	2.1 (2.82)	12.0 (8.85)	10.0 (7.38)	4.4	**1FK7081-2AC7■-1■■■**	4	20 (17.7)	12.9 (28.4)
		2.6 (3.49)	16.0 (11.8)	12.5 (9.22)	6.3	**1FK7083-2AC7■-1■■■**	4	26 (23.0)	15.6 (34.4)
		3.1 (4.16)	20.0 (14.8)	15.0 (11.1)	6.7	**1FK7084-2AC7■-1■■■**	4	32.5 (28.8)	18.3 (40.3)
	100	3 (4.02)	18.0 (13.3)	14.5 (10.7)	7.1	**1FK7100-2AC7■-1■■■**	4	54 (47.8)	17.6 (38.8)
		4.3 (5.77)	27.0 (19.9)	20.5 (15.1)	9.7	**1FK7101-2AC7■-1■■■**	4	79 (69.9)	23.0 (50.7)
		5.2 (6.97)	36.0 (26.6)	25.0 (18.4)	11.0	**1FK7103-2AC7■-1■■■**	4	104 (92.1)	28.5 (62.8)
		7.7 (10.3)	48.0 (35.4)	37.0 (27.3)	16.0	**1FK7105-2AC7■-1■■■**	4	154 (136)	39.0 (86.0)
3000	48	0.8 (1.07)	3.0 (2.21)	2.6 (1.92)	2.0	**1FK7042-2AF7■-1■■■**	4	2.9 (2.57)	4.6 (10.1)
	63	1.5 (2.01)	6.0 (4.43)	4.7 (3.47)	3.7	**1FK7060-2AF7■-1■■■**	4	7.7 (6.82)	7.1 (15.7)
		1.9 (2.55)	8.5 (6.27)	6.0 (4.43)	4.0	**1FK7062-2AF7■-1■■■**	4	11.2 (9.91)	9.1 (20.1)
		2.3 (3.08)	11.0 (8.11)	7.3 (5.38)	5.6	**1FK7063-2AF7■-1■■■**	4	14.7 (13.0)	11.1 (24.5)
	80	2.1 (2.82)	8.0 (5.90)	6.8 (5.02)	4.4	**1FK7080-2AF7■-1■■■**	4	14.2 (12.6)	10.3 (22.7)
		2.7 (3.62)	12.0 (8.85)	8.7 (6.42)	6.8	**1FK7081-2AF7■-1■■■**	4	20 (17.7)	12.9 (28.4)
		3.3 (4.43)	16.0 (11.8)	10.5 (7.74)	7.2	**1FK7083-2AF7■-1■■■**	4	26 (23.0)	15.6 (34.4)
		3.1 (4.16)	20.0 (14.8)	10.0 (7.38)	6.5	**1FK7084-2AF7■-1■■■**	4	32.5 (28.8)	18.3 (40.3)
	100	3.8 (5.10)	18.0 (13.3)	12.0 (8.85)	8.0	**1FK7100-2AF7■-1■■■**	4	54 (47.8)	17.6 (38.8)
		4.9 (6.57)	27.0 (19.9)	15.5 (11.4)	11.6	**1FK7101-2AF7■-1■■■**	4	79 (69.9)	23.0 (50.7)
		4.4 (5.90)	36.0 (26.6)	14.0 (10.3)	11.5	**1FK7103-2AF7■-1■■■**	4	104 (92.1)	28.5 (62.8)
		8.2 (11.0)	48.0 (35.4)	26.0 (19.2)	18.0	**1FK7105-2AF7■-1■■■**	4	154 (136)	39.0 (86.0)

Encoder systems for motors without DRIVE-CLiQ interface:	IC2048S/R encoder	**4**	**A**
	AM2048S/R encoder	**4**	**E**
	Multi-pole resolver	**4**	**S**
	2-pole resolver	**4**	**T**
Encoder systems for motors with DRIVE-CLiQ interface:	AS24DQI encoder	**1**	**B**
	AM24DQI encoder	**1**	**C**
	AS20DQI encoder	**1**	**Q**
	AM20DQI encoder	**1**	**R**
	R15DQ resolver	**1**	**U**
	R14DQ resolver	**1**	**P**

Shaft extension:	**Shaft and flange accuracy:**	**Holding brake:**	
Feather key	Tolerance N	Without	**A**
Feather key	Tolerance N	With	**B**
Plain shaft	Tolerance N	Without	**G**
Plain shaft	Tolerance N	With	**H**

Degree of protection:	IP64	**0**
	IP65	**1**
	IP65 and DE flange IP67	**2**

© Siemens AG 2017

Motor type (repeated)	Efficiency 1)	Stall current	Calculated power P_{calc} 6)	SINAMICS S120 Motor Module		Power cable with complete shield Motor connection (and brake connection) via power connector		
				Rated output current 2)	**Booksize format** Internal air cooling For other components, see SINAMICS S120 drive system	Power connector	Cable cross-section 3)	Pre-assembled cable
	η	I_0 at M_0 ΔT=100 K	P_{calc} at M_0 ΔT=100 K	I_{rated}				
	%	A	kW (hp)	A	Article No.	Size	mm²	Article No.
				Line voltage 380 ... 480 V 3 AC				
1FK7042-2AC71-...	88	1.6	0.6 (0.80)	3	**6SL3120-■TE13-0AD.**	1	4 × 1.5	**6FX■002-5■N06-....**
1FK7060-2AC71-...	90	3.15	1.3 (1.74)	3 4)	**6SL3120-■TE13-0AD.**	1	4 × 1.5	**6FX■002-5■N06-....**
1FK7062-2AC71-...	90	3.0	1.8 (2.41)	3	**6SL3120-■TE13-0AD.**	1	4 × 1.5	**6FX■002-5■N06-....**
1FK7063-2AC71-...	91	5.3	2.3 (3.08)	5 4)	**6SL3120-■TE15-0AD.**	1	4 × 1.5	**6FX■002-5■N06-....**
1FK7081-2AC71-...	93	5.0	2.5 (3.35)	5	**6SL3120-■TE15-0AD.**	1	4 × 1.5	**6FX■002-5■N06-....**
1FK7083-2AC71-...	93	7.5	3.4 (4.56)	9	**6SL3120-■TE21-0AD.**	1	4 × 1.5	**6FX■002-5■N06-....**
1FK7084-2AC71-...	93	8.5	4.2 (5.63)	9	**6SL3120-■TE21-0AD.**	1	4 × 1.5	**6FX■002-5■N06-....**
1FK7100-2AC71-...	92	8.4	3.8 (5.10)	9	**6SL3120-■TE21-0AD.**	1	4 × 1.5	**6FX■002-5■N06-....**
1FK7101-2AC71-...	93	12.3	5.7 (7.64)	18	**6SL3120-■TE21-8AD.**	1.5	4 × 1.5	**6FX■002-5■N26-....**
1FK7103-2AC71-...	93	14.4	7.5 (10.1)	18	**6SL3120-■TE21-8AD.**	1.5	4 × 1.5	**6FX■002-5■N26-....**
1FK7105-2AC71-...	93	20.0	10.1 (13.5)	30	**6SL3120-1TE23-0AD.**	1.5	4 × 2.5	**6FX■002-5■N36-....**
1FK7042-2AF71-...	89	2.2	0.9 (1.21)	3	**6SL3120-■TE13-0AD.**	1	4 × 1.5	**6FX■002-5■N06-....**
1FK7060-2AF71-...	90	4.45	1.9 (2.55)	5	**6SL3120-■TE15-0AD.**	1	4 × 1.5	**6FX■002-5■N06-....**
1FK7062-2AF71-...	91	5.3	2.7 (3.62)	5 4)	**6SL3120-■TE15-0AD.**	1	4 × 1.5	**6FX■002-5■N06-....**
1FK7063-2AF71-...	91	8.0	3.5 (4.69)	9	**6SL3120-■TE21-0AD.**	1	4 × 1.5	**6FX■002-5■N06-....**
1FK7080-2AF71-...	92	4.9	2.5 (3.35)	5	**6SL3120-■TE15-0AD.**	1	4 × 1.5	**6FX■002-5■N06-....**
1FK7081-2AF71-...	93	8.7	3.8 (5.10)	9	**6SL3120-■TE21-0AD.**	1	4 × 1.5	**6FX■002-5■N06-....**
1FK7083-2AF71-...	93	10.1	5 (6.71)	18	**6SL3120-■TE21-8AD.**	1	4 × 1.5	**6FX■002-5■N06-....**
1FK7084-2AF71-...	93	12.1	6.3 (8.45)	18	**6SL3120-■TE21-8AD.**	1	4 × 1.5	**6FX■002-5■N06-....**
1FK7100-2AF71-...	92	11.1	5.7 (7.64)	18	**6SL3120-■TE21-8AD.**	1	4 × 1.5	**6FX■002-5■N06-....**
1FK7101-2AF71-...	93	18.8	8.5 (11.4)	18 4)	**6SL3120-■TE21-8AD.**	1.5	4 × 2.5	**6FX■002-5■N36-....**
1FK7103-2AF71-...	93	26.0	11.3 (15.2)	30	**6SL3120-1TE23-0AD.**	1.5	4 × 4	**6FX■002-5■N46-....**
1FK7105-2AF71-...	94	31.0	15.1 (20.3)	30 4)	**6SL3120-1TE23-0AD.**	1.5	4 × 6	**6FX■002-5■N56-....**

Motor Module:	
Single Motor Module	**1**
Double Motor Module	**2**
Version status	

Power cable:	
MOTION-CONNECT 800PLUS	**8**
MOTION-CONNECT 500	**5**
Without brake cores	**C**
With brake cores 5)	**D**
Length code	**....**

For information on the cables, refer to MOTION-CONNECT connection systems

8

1) Optimum efficiency in continuous duty.

2) With default setting of the pulse frequency.

3) The current carrying capacity of the power cables complies with EN 60204-1 for installation type C, for continuous duty at an ambient air temperature of 40 °C (104 °F).

4) With the specified Motor Module, the motor cannot be fully utilized at M_0 with a winding temperature rise of ΔT = 100 K. If a Motor Module with a higher rating is used, you must check whether the specified power cable can be connected to the larger Motor Module.

5) Cable cross-section for brake connection 2 × 1.5 mm².

6) $P_{calc}\,[\text{kW}] = \dfrac{M_0\,[\text{Nm}] \times n_{rated}}{9550}$ $\quad P_{calc}\,[\text{hp}] = \dfrac{M_0\,[\text{lb}_f\text{-ft}] \times n_{rated}}{5250}$

© Siemens AG 2017

Selection and ordering data

Rated speed	Shaft height	Rated power	Static torque	Rated torque	Rated current	SIMOTICS S-1FK7 Compact synchronous motors	No. of pole pairs	Moment of inertia Rotor (without brake)	Weight (without brake)
n_{rated}	SH	P_{rated} at ΔT=100 K	M_0 at ΔT=100 K	M_{rated} at ΔT=100 K	I_{rated} at ΔT=100 K		p	J	m
rpm		kW (hp)	Nm (lb_f-ft)	Nm (lb_f-ft)	A	Article No.		10^{-4} kgm^2 (10^{-3} lb_f-in-s^2)	kg (lb)
SIMOTICS S-1FK7 Compact for DC link voltage 510 ... 720 V DC – Natural cooling									
4500	63	1.7 (2.28)	6.0 (4.43)	3.7 (2.73)	4.3	**1FK7060-2AH7■-1■■■**	4	7.7 (6.82)	7.1 (15.7)
		1.4 (1.88)	8.5 (6.27)	3.0 (2.21)	3.3	**1FK7062-2AH7■-1■■■**	4	11.2 (9.91)	9.1 (20.1)
		1.4 (1.88)	11.0 (8.11)	3.0 (2.21)	3.8	**1FK7063-2AH7■-1■■■**	4	14.7 (13.01)	11.1 (24.5)
	80	2.1 (2.82)	8.0 (5.90)	4.5 (3.32)	4.8	**1FK7080-2AH7■-1■■■**	4	14.2 (12.6)	10.3 (22.7)
		1.8 (2.41)	12.0 (8.85)	3.8 (2.80)	4.9	**1FK7081-2AH7■-1■■■**	4	20 (17.70)	12.9 (28.4)
		1.4 (1.88)	16.0 (11.8)	3.0 (2.21)	3.6	**1FK7083-2AH7■-1■■■**	4	26 (23.01)	15.6 (34.4)
6000	36	0.5 (0.67)	1.15 (0.85)	0.8 (0.59)	1.3	**1FK7032-2AK7■-1■■■**	3	0.65 (0.58)	2.7 (5.95)
		0.6 (0.80)	1.6 (1.18)	1.0 (0.74)	1.3	**1FK7034-2AK7■-1■■■**	3	0.9 (0.80)	3.5 (7.72)
	48	0.7 (0.94)	1.6 (1.18)	1.1 (0.81)	1.85	**1FK7040-2AK7■-1■■■**	4	1.6 (1.42)	3.2 (7.06)
		0.9 (1.21)	3.0 (2.21)	1.5 (1.11)	2.5	**1FK7042-2AK7■-1■■■**	4	2.9 (2.57)	4.6 (10.1)

Encoder systems for motors without DRIVE-CLiQ interface:	IC2048S/R encoder	**4**	**A**
	AM2048S/R encoder	**4**	**E**
	Multi-pole resolver	**4**	**S**
	2-pole resolver	**4**	**T**
Encoder systems for motors with DRIVE-CLiQ interface:	AS24DQI encoder	**1**	**B**
	AM24DQI encoder	**1**	**C**
	AS20DQI encoder	**1**	**Q**
	AM20DQI encoder	**1**	**R**
	R15DQ resolver	**1**	**U**
	R14DQ resolver	**1**	**P**

Shaft extension:	**Shaft and flange accuracy:**	**Holding brake:**	
Feather key	Tolerance N	Without	**A**
Feather key	Tolerance N	With	**B**
Plain shaft	Tolerance N	Without	**G**
Plain shaft	Tolerance N	With	**H**

Degree of protection:	IP64	**0**
	IP65	**1**
	IP65 and DE flange IP67	**2**

© Siemens AG 2017

Motor type (repeated)	Efficiency [1]	Stall current	Calculated power P_{calc} [5]	SINAMICS S120 Motor Module: Rated output current [2]	SINAMICS S120 Motor Module: Booksize format, Internal air cooling. For other components, see SINAMICS S120 drive system	Power cable with complete shield, Motor connection (and brake connection) via power connector: Power connector	Cable cross-section [3]	Pre-assembled cable
	η	I_0 at M_0 ΔT=100 K	P_{calc} at M_0 ΔT=100 K	I_{rated}		Size	mm²	Article No.
	%	A	kW (hp)	A	Article No.			
				Line voltage 380 ... 480 V 3 AC				
1FK7060-2AH71-...	90	6.3	2.8 (3.75)	9	**6SL3120-■TE21-0AD.**	1	4 × 1.5	**6FX■002-5■N06-....**
1FK7062-2AH71-...	91	8.0	4 (5.36)	9	**6SL3120-■TE21-0AD.**	1	4 × 1.5	**6FX■002-5■N06-....**
1FK7063-2AH71-...	90	12.0	5.2 (6.97)	18	**6SL3120-■TE21-8AD.**	1	4 × 1.5	**6FX■002-5■N06-....**
1FK7080-2AH71-...	92	7.4	3.8 (5.10)	9	**6SL3120-■TE21-0AD.**	1	4 × 1.5	**6FX■002-5■N06-....**
1FK7081-2AH71-...	93	13.1	5.7 (7.64)	18	**6SL3120-■TE21-8AD.**	1	4 × 1.5	**6FX■002-5■N06-....**
1FK7083-2AH71-...	93	15.0	7.5 (10.1)	18	**6SL3120-■TE21-8AD.**	1	4 × 1.5	**6FX■002-5■N06-....**
1FK7032-2AK71-...	88	1.7	0.7 (0.94)	3	**6SL3120-■TE13-0AD.**	1	4 × 1.5	**6FX■002-5■N06-....**
1FK7034-2AK71-...	88	1.9	1 (1.34)	3	**6SL3120-■TE13-0AD.**	1	4 × 1.5	**6FX■002-5■N06-....**
1FK7040-2AK71-...	88	2.35	1 (1.34)	3	**6SL3120-■TE13-0AD.**	1	4 × 1.5	**6FX■002-5■N06-....**
1FK7042-2AK71-...	89	4.4	1.9 (2.55)	5	**6SL3120-■TE15-0AD.**	1	4 × 1.5	**6FX■002-5■N06-....**

Motor Module:	
Single Motor Module	**1**
Double Motor Module	**2**
Version status	

Power cable:	
MOTION-CONNECT 800PLUS	**8**
MOTION-CONNECT 500	**5**
Without brake cores	**C**
With brake cores [4]	**D**
Length code	**....**

For information on the cables, refer to MOTION-CONNECT connection systems

8

[1] Optimum efficiency in continuous duty.

[2] With default setting of the pulse frequency.

[3] The current carrying capacity of the power cables complies with EN 60204-1 for installation type C, for continuous duty at an ambient air temperature of 40 °C (104 °F).

[4] Cable cross-section for brake connection 2 × 1.5 mm².

[5] $P_{calc}\,[\text{kW}] = \dfrac{M_0\,[\text{Nm}] \times n_{rated}}{9550}$ $\quad P_{calc}\,[\text{hp}] = \dfrac{M_0\,[\text{lb}_f\text{-ft}] \times n_{rated}}{5250}$

© Siemens AG 2017

Selection and ordering data

Rated speed	Shaft height	Rated power	Static torque	Rated torque	Rated current	**SIMOTICS S-1FK7 Compact synchronous motors**	No. of pole pairs	Moment of inertia Rotor (without brake)	Weight (without brake)
n_{rated}	SH	P_{rated} at ΔT=100 K	M_0 at ΔT=100 K	M_{rated} at ΔT=100 K	I_{rated} at ΔT=100 K		p	J	m
rpm		kW (hp)	Nm (lb_f-ft)	Nm (lb_f-ft)	A	Article No.		10^{-4} kgm^2 (10^{-3} lb_f-in-s^2)	kg (lb)
1FK7 Compact for DC link voltage 510 ... 720 V DC – Natural cooling									
6000	20	0.05 (0.07)	0.18 (0.13)	0.08 (0.06)	0.85	**1FK7011-5AK7■-1■■■**	4	0.064 (0.06)	0.9 (1.98)
		0.1 (0.13)	0.35 (0.26)	0.16 (0.12)	0.85	**1FK7015-5AK7■-1■■■**	4	0.083 (0.07)	1.1 (2.43)
	28	0.38 (0.51)	0.85 (0.63)	0.6 (0.44)	1.4	**1FK7022-5AK7■-1■■■**	3	0.28 (0.25)	1.8 (3.97)

Encoder systems for motors without DRIVE-CLiQ interface:	IC2048S/R encoder	**4**	**A**
	AM512S/R encoder (only for 1FK702)	**4**	**H**
	AM16S/R encoder	**4**	**J**
	Multi-pole resolver	**4**	**S**
	2-pole resolver	**4**	**T**
Encoder systems for motors with DRIVE-CLiQ interface: (Only for 1FK702) [1]	IC22DQ encoder	**1**	**D**
	AM20DQ encoder	**1**	**L**
	AM15DQ encoder	**1**	**V**
	R15DQ resolver	**1**	**U**
	R14DQ resolver	**1**	**P**

Shaft extension:	**Shaft and flange accuracy:**	**Holding brake:**	
Feather key	Tolerance N	Without	**A**
Feather key	Tolerance N	With	**B**
Plain shaft	Tolerance N	Without	**G**
Plain shaft	Tolerance N	With	**H**

Degree of protection:	**Paint finish:**	
IP64 (only for 1FK702)	Without	**0**
IP65 and DE flange IP67 (only for 1FK702)	Without	**2**
IP54 (only for 1FK701), IP64 (only for 1FK702)	With	**3**
IP65 and DE flange IP67 (only for 1FK702)	With	**5**

[1] 1FK701 motors cannot be equipped with a DRIVE-CLiQ interface.
The encoder systems are connected via SMC

© Siemens AG 2017

Motor type (repeated)	Efficiency [1]	Stall current	Calculated power P_{calc} [5]	SINAMICS S120 Motor Module: Rated output current [2]	SINAMICS S120 Motor Module: Booksize format, Internal air cooling, For other components, see SINAMICS S120 drive system	Power cable with complete shield, Motor connection (and brake connection) via power connector: Power connector	Cable cross-section [3]	Pre-assembled cable
	η	I_0 at M_0 ΔT=100 K	P_{calc} at M_0 ΔT=100 K	I_{rated}		Size	mm²	Article No.
	%	A	kW (hp)	A	Article No.			
				Line voltage 380 ... 480 V 3 AC				
1FK7011-5AK71-...	62	1.5	0.1 (0.13)	3	**6SL3120-■TE13-0AD.**	0.5	4 × 1.5	**6FX5002-5DN26-....**
1FK7015-5AK71-...	68	1.5	0.2 (0.27)	3	**6SL3120-■TE13-0AD.**	0.5	4 × 1.5	**6FX5002-5DN26-....**
1FK7022-5AK71-...	86	1.8	0.5 (0.67)	3	**6SL3120-■TE13-0AD.**	1	4 × 1.5	**6FX■002-5■N06-....**

Motor Module: Single Motor Module	**1**	
Double Motor Module	**2**	
Version status		

Power cable: MOTION-CONNECT 800PLUS	**8**		
MOTION-CONNECT 500	**5**		
Without brake cores		**C**	
With brake cores [4]		**D**	
Length code			**....**

For information on the cables, refer to MOTION-CONNECT connection systems

8

[1] Optimum efficiency in continuous duty.

[2] With default setting of the pulse frequency.

[3] The current carrying capacity of the power cables complies with EN 60204-1 for installation type C, for continuous duty at an ambient air temperature of 40 °C (104 °F).

[4] Cable cross-section for brake connection 2 × 1.5 mm².

[5] $P_{calc}\,[\text{kW}] = \dfrac{M_0\,[\text{Nm}] \times n_{rated}}{9550}$ $\quad P_{calc}\,[\text{hp}] = \dfrac{M_0\,[\text{lb}_f\text{-ft}] \times n_{rated}}{5250}$

© Siemens AG 2017

Selection and ordering data

Rated speed	Shaft height	Rated power	Static torque	Rated torque	Rated current	SIMOTICS S-1FK7 High Dynamic synchronous motors	No. of pole pairs	Moment of inertia Rotor (without brake)	Weight (without brake)
n_{rated}	SH	P_{rated} at ΔT=100 K	M_0 at ΔT=100 K	M_{rated} at ΔT=100 K	I_{rated} at ΔT=100 K		p	J	m
rpm		kW (hp)	Nm (lb_f-ft)	Nm (lb_f-ft)	A	Article No.		10^{-4} kgm^2 (10^{-3} lb_f-in-s^2)	kg (lb)
SIMOTICS S-1FK7 High Dynamic for DC link voltage 510 ... 720 V DC – Natural cooling									
2000	63	2.1 (2.82)	12.0 (8.85)	10.0 (7.38)	7.1	**1FK7064-4CC7■-1■■■**	3	7.5 (6.64)	15.4 (34.0)
	80	3.1 (4.16)	22.0 (16.2)	15.0 (11.1)	10.0	**1FK7085-4CC7■-1■■■**	4	22 (19.5)	23.0 (50.7)
		3.8 (5.10)	28.0 (20.7)	18.0 (13.3)	9.0	**1FK7086-4CC7■-1■■■**	4	22 (19.5)	23.0 (50.7)
3000	48	1.2 (1.61)	4.5 (3.32)	3.7 (2.73)	3.45	**1FK7044-4CF7■-1■■■**	3	1.26 (1.12)	7.4 (16.3)
	63	1.7 (2.28)	6.4 (4.72)	5.4 (3.98)	5.3	**1FK7061-4CF7■-1■■■**	3	4.1 (3.63)	9.5 (20.9)
		2.5 (3.35)	12.0 (8.85)	8.0 (5.90)	7.6	**1FK7064-4CF7■-1■■■**	3	7.5 (6.64)	15.4 (34.0)
	80	2 (2.68)	22.0 (16.2)	6.5 (4.79)	7.0	**1FK7085-4CF7■-1■■■**	4	22 (19.5)	23.0 (50.7)
		2 (2.68)	28.0 (20.7)	6.5 (4.79)	5.7	**1FK7086-4CF7■-1■■■**	4	22 (19.5)	23.0 (50.7)
4500	48	1.2 (1.61)	3.5 (2.58)	2.6 (1.92)	3.3	**1FK7043-4CH7■-1■■■**	3	1 (0.89)	6.0 (13.2)
		1.4 (1.88)	4.5 (3.32)	3.0 (2.21)	3.9	**1FK7044-4CH7■-1■■■**	3	1.26 (1.12)	7.4 (16.3)
	63	2 (2.68)	6.4 (4.72)	4.3 (3.17)	6.2	**1FK7061-4CH7■-1■■■**	3	4.1 (3.63)	9.5 (20.9)
		2.4 (3.22)	12.0 (8.85)	5.0 (3.69)	7.0	**1FK7064-4CH7■-1■■■**	3	7.5 (6.64)	15.4 (34.0)
6000	36	0.6 (0.80)	1.3 (0.96)	0.9 (0.66)	1.6	**1FK7033-4CK7■-1■■■**	3	0.25 (0.22)	3.0 (6.62)
	48	1.3 (1.74)	3.5 (2.58)	2.0 (1.48)	3.5	**1FK7043-4CK7■-1■■■**	3	1 (0.89)	6.0 (13.2)

Encoder systems for motors without DRIVE-CLiQ interface:	IC2048S/R encoder	**4**	**A**
	AM2048S/R encoder	**4**	**E**
	Multi-pole resolver	**4**	**S**
	2-pole resolver	**4**	**T**
Encoder systems for motors with DRIVE-CLiQ interface:	AS24DQI encoder	**1**	**B**
	AM24DQI encoder	**1**	**C**
	AS20DQI encoder	**1**	**Q**
	AM20DQI encoder	**1**	**R**
	R15DQ resolver	**1**	**U**
	R14DQ resolver	**1**	**P**

Shaft extension:	**Shaft and flange accuracy:**	**Holding brake:**	
Feather key	Tolerance N	Without	**A**
Feather key	Tolerance N	With	**B**
Plain shaft	Tolerance N	Without	**G**
Plain shaft	Tolerance N	With	**H**

Degree of protection:	IP64	**0**
	IP65	**1**
	IP65 and DE flange IP67	**2**

© Siemens AG 2017

Motor type (repeated)	Efficiency [1]	Stall current	Calculated power P_{calc} [5]	SINAMICS S120 Motor Module: Rated output current [2]	SINAMICS S120 Motor Module: Booksize format, Internal air cooling, For other components, see SINAMICS S120 drive system	Power cable with complete shield, Motor connection (and brake connection) via power connector: Power connector	Cable cross-section [3]	Pre-assembled cable
	η	I_0 at M_0 ΔT=100 K	P_{calc} at M_0 ΔT=100 K	I_{rated}		Size	mm²	Article No.
	%	A	kW (hp)	A	Article No.			
				Line voltage 380 ... 480 V 3 AC				
1FK7064-4CC71-...	93	8.1	2.5 (3.35)	9	**6SL3120-■TE21-0AD.**	1	4 × 1.5	**6FX■002-5■N06-....**
1FK7085-4CC71-...	92	13.5	4.6 (6.17)	18	**6SL3120-■TE21-8AD.**	1	4 × 1.5	**6FX■002-5■N06-....**
1FK7086-4CC71-...	93	13.2	5.9 (7.91)	18	**6SL3120-■TE21-8AD.**	1	4 × 1.5	**6FX■002-5■N06-....**
1FK7044-4CF71-...	91	4.0	1.4 (1.88)	5	**6SL3120-■TE15-0AD.**	1	4 × 1.5	**6FX■002-5■N06-....**
1FK7061-4CF71-...	93	6.1	2 (2.68)	9	**6SL3120-■TE21-0AD.**	1	4 × 1.5	**6FX■002-5■N06-....**
1FK7064-4CF71-...	93	10.8	3.8 (5.10)	18	**6SL3120-■TE21-8AD.**	1	4 × 1.5	**6FX■002-5■N06-....**
1FK7085-4CF71-...	92	22.0	6.9 (9.25)	30	**6SL3120-1TE23-0AD.**	1.5	4 × 4	**6FX■002-5■N46-....**
1FK7086-4CF71-...	93	21.5	8.8 (11.8)	30	**6SL3120-1TE23-0AD.**	1.5	4 × 4	**6FX■002-5■N46-....**
1FK7043-4CH71-...	90	4.1	1.6 (2.15)	5	**6SL3120-■TE15-0AD.**	1	4 × 1.5	**6FX■002-5■N06-....**
1FK7044-4CH71-...	91	5.4	2.1 (2.82)	9	**6SL3120-■TE21-0AD.**	1	4 × 1.5	**6FX■002-5■N06-....**
1FK7061-4CH71-...	93	8.7	3 (4.02)	9	**6SL3120-■TE21-0AD.**	1	4 × 1.5	**6FX■002-5■N06-....**
1FK7064-4CH71-...	93	15.0	5.7 (7.64)	18	**6SL3120-■TE21-8AD.**	1	4 × 1.5	**6FX■002-5■N06-....**
1FK7033-4CK71-...	88	2.1	0.8 (1.07)	3	**6SL3120-■TE13-0AD.**	1	4 × 1.5	**6FX■002-5■N06-....**
1FK7043-4CK71-...	90	5.6	2.2 (2.95)	9	**6SL3120-■TE21-0AD.**	1	4 × 1.5	**6FX■002-5■N06-....**

Motor Module:	
Single Motor Module	**1**
Double Motor Module	**2**
Version status	

Power cable:		
MOTION-CONNECT 800PLUS	**8**	
MOTION-CONNECT 500	**5**	
Without brake cores		**C**
With brake cores [4]		**D**
Length code		**....**

For information on the cables, refer to MOTION-CONNECT connection systems

8

[1] Optimum efficiency in continuous duty.

[2] With default setting of the pulse frequency.

[3] The current carrying capacity of the power cables complies with EN 60204-1 for installation type C, for continuous duty at an ambient air temperature of 40 °C (104 °F).

[4] Cable cross-section for brake connection 2 × 1.5 mm².

[5] $P_{calc}\,[\text{kW}] = \frac{M_0\,[\text{Nm}] \times n_{rated}}{9550}$ $\quad P_{calc}\,[\text{hp}] = \frac{M_0\,[\text{lb}_f\text{-ft}] \times n_{rated}}{5250}$

© Siemens AG 2017

Selection and ordering data

Rated speed	Shaft height	Rated power	Static torque	Rated torque	Rated current	**SIMOTICS S-1FK7 High Inertia synchronous motors**	No. of pole pairs	Moment of inertia Rotor (without brake)	Weight (without brake)
n_{rated}	SH	P_{rated} at ΔT=100 K	M_0 at ΔT=100 K	M_{rated} at ΔT=100 K	I_{rated} at ΔT=100 K		p	J	m
rpm		kW (hp)	Nm (lb_f-ft)	Nm (lb_f-ft)	A	Article No.		10^{-4} kgm^2 (10^{-3} lb_f-in-s^2)	kg (lb)
SIMOTICS S-1FK7 High Inertia for DC link voltage 510 ... 720 V DC – Natural cooling									
2000	80	3.1 (4.16)	20.0 (14.8)	15.0 (11.1)	6.7	**1FK7084-3BC7■-1■■■**	4	99 (87.6)	23.0 (50.7)
	100	3 (4.02)	18.0 (13.3)	14.5 (10.7)	7.1	**1FK7100-3BC7■-1■■■**	4	87 (77.0)	19.4 (42.8)
		4.3 (5.77)	27.0 (19.9)	20.5 (15.1)	9.7	**1FK7101-3BC7■-1■■■**	4	127 (112)	25.7 (56.7)
		5.2 (6.97)	36.0 (26.6)	25.0 (18.4)	11.0	**1FK7103-3BC7■-1■■■**	4	168 (149)	32.1 (70.8)
		7.7 (10.3)	48.0 (35.4)	37.0 (27.3)	16.0	**1FK7105-3BC7■-1■■■**	4	249 (220)	44.4 (97.9)
3000	63	1.5 (2.01)	6.0 (4.43)	4.7 (3.47)	3.7	**1FK7060-3BF7■-1■■■**	4	12.5 (11.1)	7.9 (17.4)
		1.9 (2.55)	8.5 (6.27)	6.0 (4.43)	4.0	**1FK7062-3BF7■-1■■■**	4	23.5 (20.8)	10.7 (23.6)
	80	2.7 (3.62)	12.0 (8.85)	8.7 (6.42)	6.8	**1FK7081-3BF7■-1■■■**	4	49 (43.4)	15.2 (33.5)
		3.1 (4.16)	20.0 (14.8)	10.0 (7.38)	6.5	**1FK7084-3BF7■-1■■■**	4	99 (87.6)	23.0 (50.7)
	100	4.9 (6.57)	27.0 (19.9)	15.5 (11.4)	11.6	**1FK7101-3BF7■-1■■■**	4	127 (112)	25.7 (56.7)
		4.4 (5.90)	36.0 (26.6)	14.0 (10.3)	11.5	**1FK7103-3BF7■-1■■■**	4	168 (149)	32.1 (70.8)
6000	48	0.9 (1.21)	3.0 (2.21)	1.5 (1.11)	2.5	**1FK7042-3BK7■-1■■■**	4	5.1 (4.51)	5.1 (11.2)

Encoder systems for motors without DRIVE-CLiQ interface:	IC2048S/R encoder	**4**	**A**
	AM2048S/R encoder	**4**	**E**
Encoder systems for motors with DRIVE-CLiQ interface:	AS24DQI encoder	**1**	**B**
	AM24DQI encoder	**1**	**C**
	AS20DQI encoder	**1**	**Q**
	AM20DQI encoder	**1**	**R**

Shaft extension:	**Shaft and flange accuracy:**	**Holding brake:**	
Feather key	Tolerance N	Without	**A**
Feather key	Tolerance N	With	**B**
Plain shaft	Tolerance N	Without	**G**
Plain shaft	Tolerance N	With	**H**

Degree of protection:	IP64	**0**
	IP65	**1**
	IP65 and DE flange IP67	**2**

© Siemens AG 2017

Motor type (repeated)	Efficiency [1]	Stall current	Calculated power P_{calc} [5]	SINAMICS S120 Motor Module: Rated output current [2]	Booksize format, Internal air cooling (For other components, see SINAMICS S120 drive system)	Power cable with complete shield, Motor connection (and brake connection) via power connector: Power connector	Cable cross-section [3]	Pre-assembled cable
	η	I_0 at M_0 ΔT=100 K	P_{calc} at M_0 ΔT=100 K	I_{rated}		Size	mm²	
	%	A	kW (hp)	A	Article No.			Article No.
				Line voltage 380 ... 480 V 3 AC				
1FK7084-3BC71-...	93	8.5	4.2 (5.63)	9	**6SL3120-■TE21-0AD.**	1	4 × 1.5	**6FX■002-5■N06-....**
1FK7100-3BC71-...	92	8.4	3.8 (5.10)	9	**6SL3120-■TE21-0AD.**	1	4 × 1.5	**6FX■002-5■N06-....**
1FK7101-3BC71-...	93	12.3	5.7 (7.64)	18	**6SL3120-■TE21-8AD.**	1.5	4 × 1.5	**6FX■002-5■N26-....**
1FK7103-3BC71-...	93	14.4	7.5 (10.1)	18	**6SL3120-■TE21-8AD.**	1.5	4 × 1.5	**6FX■002-5■N26-....**
1FK7105-3BC71-...	93	20.0	10.1 (13.5)	30	**6SL3120-1TE23-0AD.**	1.5	4 × 2.5	**6FX■002-5■N36-....**
1FK7060-3BF71-...	90	4.45	1.9 (2.55)	5	**6SL3120-■TE15-0AD.**	1	4 × 1.5	**6FX■002-5■N06-....**
1FK7062-3BF71-...	91	5.3	2.7 (3.62)	5	**6SL3120-■TE15-0AD.**	1	4 × 1.5	**6FX■002-5■N06-....**
1FK7081-3BF71-...	93	8.7	3.8 (5.10)	9	**6SL3120-■TE21-0AD.**	1	4 × 1.5	**6FX■002-5■N06-....**
1FK7084-3BF71-...	93	12.1	6.3 (8.45)	18	**6SL3120-■TE21-8AD.**	1	4 × 1.5	**6FX■002-5■N06-....**
1FK7101-3BF71-...	93	18.8	8.5 (11.4)	18	**6SL3120-■TE21-8AD.**	1.5	4 × 2.5	**6FX■002-5■N36-....**
1FK7103-3BF71-...	93	26.0	11.3 (15.2)	30	**6SL3120-1TE23-0AD.**	1.5	4 × 4	**6FX■002-5■N46-....**
1FK7042-3BK71-...	89	4.4	1.9 (2.55)	5	**6SL3120-■TE15-0AD.**	1	4 × 1.5	**6FX■002-5■N06-....**

Motor Module:	
Single Motor Module	**1**
Double Motor Module	**2**
Version status	

Power cable:	
MOTION-CONNECT 800PLUS	**8**
MOTION-CONNECT 500	**5**
Without brake cores	**C**
With brake cores [4]	**D**
Length code	**....**

For information on the cables, refer to MOTION-CONNECT connection systems

8

[1] Optimum efficiency in continuous duty.

[2] With default setting of the pulse frequency.

[3] The current carrying capacity of the power cables complies with EN 60204-1 for installation type C, for continuous duty at an ambient air temperature of 40 °C (104 °F). Cable cross-section for brake connection 2 × 1.5 mm².

[4] Cable cross-section for brake connection 2 × 1.5 mm².

[5] $P_{calc}\,[\text{kW}] = \frac{M_0\,[\text{Nm}] \times n_{rated}}{9550}$ $\quad P_{calc}\,[\text{hp}] = \frac{M_0\,[\text{lb}_f\text{-ft}] \times n_{rated}}{5250}$

© Siemens AG 2017

Selection and ordering data

Rated speed	Shaft height	Rated power	Static torque	Rated torque	Rated current	**SIMOTICS S-1FK7 Compact synchronous motors for Power Modules 230 V 1 AC**	No. of pole pairs	Moment of inertia Rotor (without brake)	Weight (without brake)
n_{rated}	SH	P_{rated} at ΔT=100 K	M_0 at ΔT=100 K	M_{rated} at ΔT=100 K	I_{rated} at ΔT=100 K		p	J	m
rpm		kW (hp)	Nm (lb_f-ft)	Nm (lb_f-ft)	A	Article No.		10^{-4} kgm^2 (10^{-3} lb_f-in-s^2)	kg (lb)
SIMOTICS S-1FK7 Compact for DC link voltage 270 ... 330 V DC – Natural cooling									
3000	36	0.3 (0.40)	1.15 (0.85)	1.0 (0.74)	1.6	**1FK7032-2AF2■-1■■■**	3	0.65 (0.58)	2.7 (5.95)
		0.5 (0.67)	1.6 (1.18)	1.45 (1.07)	1.8	**1FK7034-2AF2■-1■■■**	3	0.9 (0.80)	3.5 (7.72)
	48	0.8 (1.07)	3.0 (2.21)	2.6 (1.92)	3.5	**1FK7042-2AF2■-1■■■**	4	2.9 (2.57)	4.6 (10.1)

Encoder systems for motors without DRIVE-CLiQ interface:	IC2048S/R encoder	**4**	**A**
	AM2048S/R encoder	**4**	**E**
	Multi-pole resolver	**4**	**S**
	2-pole resolver	**4**	**T**
Encoder systems for motors with DRIVE-CLiQ interface:	AS24DQI encoder	**1**	**B**
	AM24DQI encoder	**1**	**C**
	AS20DQI encoder	**1**	**Q**
	AM20DQI encoder	**1**	**R**
	R15DQ resolver	**1**	**U**
	R14DQ resolver	**1**	**P**

Shaft extension:	**Shaft and flange accuracy:**	**Holding brake:**	
Feather key	Tolerance N	Without	**A**
Feather key	Tolerance N	With	**B**
Plain shaft	Tolerance N	Without	**G**
Plain shaft	Tolerance N	With	**H**

Degree of protection:	IP64	**0**
	IP65	**1**
	IP65 and DE flange IP67	**2**

© Siemens AG 2017

Motor type (repeated)	Efficiency [1]	Stall current	Calculated power P_{calc} [5]	SINAMICS S120 Blocksize format: Rated output current [2]	PM240-2 Power Module Air cooling. For other components, see SINAMICS S120 drive system	Power cable with complete shield, Motor connection (and brake connection) via power connector: Power connector	Cable cross-section [3]	Pre-assembled cable
	η	I_0 at M_0 ΔT=100 K	P_{calc} at M_0 ΔT=100 K	I_{rated}		Size	mm²	Article No.
	%	A	kW (hp)	A	Article No.			
				Line voltage 200 ... 240 V 1 AC				
1FK7032-2AF21-...	85	1.7	0.4 (0.54)	3.0	**6SL3210-1PB13-0■L0**	1	4 × 1.5	**6FX■002-5■G10-....**
1FK7034-2AF21-...	85	1.9	0.5 (0.67)	3.0	**6SL3210-1PB13-0■L0**	1	4 × 1.5	**6FX■002-5■G10-....**
1FK7042-2AF21-...	88	3.95	0.9 (1.21)	5.5	**6SL3210-1PB15-5■L0**	1	4 × 1.5	**6FX■002-5■G10-....**

Line filter:	
Without	**U**
Integrated	**A**

Power cable:			
MOTION-CONNECT 800PLUS	**8**		
MOTION-CONNECT 500	**5**		
Without brake cores		**C**	
With brake cores [4]		**D**	
Length code			**....**

For information on the cables, refer to MOTION-CONNECT connection systems

8

1) Optimum efficiency in continuous duty.
2) With default setting of the pulse frequency.
3) The current carrying capacity of the power cables complies with EN 60204-1 for installation type C, for continuous duty at an ambient air temperature of 40 °C (104 °F).
4) Cable cross-section for brake connection 2 × 1.5 mm².
5) $P_{calc}\,[\text{kW}] = \frac{M_0\,[\text{Nm}] \times n_{rated}}{9550}$ $\quad P_{calc}\,[\text{hp}] = \frac{M_0\,[\text{lb}_f\text{-ft}] \times n_{rated}}{5250}$

© Siemens AG 2017

Selection and ordering data

Rated speed	Shaft height	Rated power	Static torque	Rated torque	Rated current	**SIMOTICS S-1FK7 Compact synchronous motors for Power Modules 230 V 1 AC**	No. of pole pairs	Moment of inertia Rotor (without brake)	Weight (without brake)
n_{rated}	SH	P_{rated} at ΔT=100 K	M_0 at ΔT=100 K	M_{rated} at ΔT=100 K	I_{rated} at ΔT=100 K		p	J	m
rpm		kW (hp)	Nm (lb_f-ft)	Nm (lb_f-ft)	A	Article No.		10^{-4} kgm^2 (10^{-3} lb_f-in-s^2)	kg (lb)
SIMOTICS S-1FK7 Compact for DC link voltage 270 ... 330 V DC – Natural cooling									
6000	20	0.05 (0.07)	0.18 (0.13)	0.08 (0.06)	0.5	**1FK7011-5AK2■-1■■■**	4	0.064 (0.06)	0.9 (1.98)
		0.1 (0.13)	0.35 (0.26)	0.16 (0.12)	0.5	**1FK7015-5AK2■-1■■■**	4	0.083 (0.07)	1.1 (2.43)
	28	0.38 (0.51)	0.85 (0.63)	0.6 (0.44)	1.4	**1FK7022-5AK2■-1■■■**	3	0.28 (0.25)	1.8 (3.97)

Encoder systems for motors without DRIVE-CLiQ interface:	IC2048S/R encoder	**4**	**A**
	AM512S/R encoder (only for 1FK702)	**4**	**H**
	AM16S/R encoder	**4**	**J**
	Multi-pole resolver	**4**	**S**
	2-pole resolver	**4**	**T**
Encoder systems for motors with DRIVE-CLiQ interface: (Only for 1FK702) [1]	IC22DQ encoder	**1**	**D**
	AM20DQ encoder	**1**	**L**
	AM15DQ encoder	**1**	**V**
	R15DQ resolver	**1**	**U**
	R14DQ resolver	**1**	**P**

Shaft extension:	**Shaft and flange accuracy:**	**Holding brake:**	
Feather key	Tolerance N	Without	**A**
Feather key	Tolerance N	With	**B**
Plain shaft	Tolerance N	Without	**G**
Plain shaft	Tolerance N	With	**H**

Degree of protection:	**Paint finish:**	
IP64 (only for 1FK702)	Without	**0**
IP65 and DE flange IP67 (only for 1FK702)	Without	**2**
IP54 (only for 1FK701), IP64 (only for 1FK702)	With	**3**
IP65 and DE flange IP67 (only for 1FK702)	With	**5**

© Siemens AG 2017

Motor type (repeated)	Efficiency [1]	Stall current	Calculated power P_{calc} [5]	SINAMICS S120 Blocksize format: Rated output current [2]	PM240-2 Power Module Air cooling	Power cable with complete shield, Motor connection (and brake connection) via power connector: Power connector	Cable cross-section [3]	Pre-assembled cable
	η	I_0 at M_0 ΔT=100 K	P_{calc} at M_0 ΔT=100 K	I_{rated}	For other components, see SINAMICS S120 drive system			
	%	A	kW (hp)	A	Article No.	Size	mm²	Article No.
				Line voltage 200 ... 240 V 1 AC				
1FK7011-5AK21-...	62	0.85	0.1 (0.13)	3.0	**6SL3210-1PB13-0■L0**	0.5	4 × 1.5	**6FX5002-5DN30-....**
1FK7015-5AK21-...	68	0.85	0.2 (0.27)	3.0	**6SL3210-1PB13-0■L0**	0.5	4 × 1.5	**6FX5002-5DN30-....**
1FK7022-5AK21-...	88	1.8	0.5 (0.67)	3.0	**6SL3210-1PB13-0■L0**	1	4 × 1.5	**6FX■002-5■G10-....**

Line filter:	
Without	**U**
Integrated	**A**

Power cable:		
MOTION-CONNECT 800PLUS	**8**	
MOTION-CONNECT 500	**5**	
Without brake cores		**C**
With brake cores [4]		**D**
Length code		**....**

For information on the cables, refer to MOTION-CONNECT connection systems

8

[1] Optimum efficiency in continuous duty.

[2] With default setting of the pulse frequency.

[3] The current carrying capacity of the power cables complies with EN 60204-1 for installation type C, for continuous duty at an ambient air temperature of 40 °C (104 °F).

[4] Cable cross-section for brake connection 2 × 1.5 mm².

[5] $P_{calc}\,[\text{kW}] = \frac{M_0\,[\text{Nm}] \times n_{rated}}{9550}$ $\quad P_{calc}\,[\text{hp}] = \frac{M_0\,[\text{lb}_f\text{-ft}] \times n_{rated}}{5250}$

© Siemens AG 2017

Selection and ordering data

Rated speed	Shaft height	Rated power	Static torque	Rated torque	Rated current	**SIMOTICS S-1FK7 High Dynamic synchronous motors for Power Modules 230 V 1 AC**	No. of pole pairs	Moment of inertia Rotor (without brake)	Weight (without brake)
n_{rated}	SH	P_{rated} at ΔT=100 K	M_0 at ΔT=100 K	M_{rated} at ΔT=100 K	I_{rated} at ΔT=100 K		p	J	m
rpm		kW (hp)	Nm (lb_f-ft)	Nm (lb_f-ft)	A	Article No.		10^{-4} kgm^2 (10^{-3} lb_f-in-s^2)	kg (lb)
SIMOTICS S-1FK7 High Dynamic for DC link voltage 270 ... 330 V DC – Natural cooling									
3000	36	0.4 (0.54)	1.3 (0.96)	1.2 (0.89)	2.05	**1FK7033-4CF2■-1■■■**	3	0.25 (0.22)	3.0 (6.61)
	48	0.9 (1.21)	3.3 (2.43)	3.0 (2.21)	3.7	**1FK7043-4CF2■-1■■■**	3	1 (0.89)	6.0 (13.2)

Encoder systems for motors without DRIVE-CLiQ interface:	IC2048S/R encoder	**4**	**A**
	AM2048S/R encoder	**4**	**E**
	Multi-pole resolver	**4**	**S**
	2-pole resolver	**4**	**T**
Encoder systems for motors with DRIVE-CLiQ interface:	AS24DQI encoder	**1**	**B**
	AM24DQI encoder	**1**	**C**
	AS20DQI encoder	**1**	**Q**
	AM20DQI encoder	**1**	**R**
	R15DQ resolver	**1**	**U**
	R14DQ resolver	**1**	**P**

Shaft extension:	**Shaft and flange accuracy:**	**Holding brake:**	
Feather key	Tolerance N	Without	**A**
Feather key	Tolerance N	With	**B**
Plain shaft	Tolerance N	Without	**G**
Plain shaft	Tolerance N	With	**H**

Degree of protection:	IP64	**0**
	IP65	**1**
	IP65 and DE flange IP67	**2**

© Siemens AG 2017

Motor type (repeated)	Efficiency [1]	Stall current	Calculated power P_{calc} [5]	SINAMICS S120 blocksize format: Rated output current [2]	PM240-2 Power Module Air cooling. For other components, see SINAMICS S120 drive system	Power cable with complete shield, Motor connection (and brake connection) via power connector: Power connector	Cable cross-section [3]	Pre-assembled cable
	η	I_0 at M_0 ΔT=100 K	P_{calc} at M_0 ΔT=100 K	I_{rated}		Size	mm²	
	%	A	kW (hp)	A	Article No.			Article No.
				Line voltage 200 ... 240 V 1 AC				
1FK7033-4CF21-...	86	2.1	0.4 (0.54)	3.0	**6SL3210-1PB13-0■L0**	1	4 × 1.5	**6FX■002-5■G10-....**
1FK7043-4CF21-...	88	3.9	1 (1.34)	5.5	**6SL3210-1PB15-5■L0**	1	4 × 1.5	**6FX■002-5■G10-....**

Line filter: Without	**U**
Integrated	**A**

Power cable: MOTION-CONNECT 800PLUS	**8**
MOTION-CONNECT 500	**5**
Without brake cores	**C**
With brake cores [4]	**D**
Length code	**....**

For information on the cables, refer to MOTION-CONNECT connection systems

8

[1] Optimum efficiency in continuous duty.

[2] With default setting of the pulse frequency.

[3] The current carrying capacity of the power cables complies with EN 60204-1 for installation type C, for continuous duty at an ambient air temperature of 40 °C (104 °F).

[4] Cable cross-section for brake connection 2 × 1.5 mm².

[5] $P_{calc}\,[\text{kW}] = \frac{M_0\,[\text{Nm}] \times n_{rated}}{9550}$ $\quad P_{calc}\,[\text{hp}] = \frac{M_0\,[\text{lb}_f\text{-ft}] \times n_{rated}}{5250}$

© Siemens AG 2017

Overview

Many drives need a holding brake with an emergency stop function for safety reasons or to meet process requirements.

The permanent magnet single-surface brakes used on the SIMOTICS S-1FT7/S-1FK7 motors function according to the closed-circuit principle. The magnetic field of the permanent-magnet exerts a tension on the brake anchor plate, i.e. in a condition of zero current, the brake is closed and the motor shaft thereby stopped. When the rated voltage of 24 V DC ± 10% is applied to the brake, current flows through the coil and produces a counter-field that cancels the pull of the permanent-magnet, causing the brake to release.

In the event of an emergency stop or power outage, approximately 2000 braking operations can be performed with maximum switched energy without causing excessive wear on the holding brake (condition: maximum external moment of inertia = moment of inertia of motor and n_{max} type-specific).

The holding brake is not an operational or safety brake.

In order to avoid switching overvoltages and any related effects on the plant environment, the brake cables must be connected externally with a varistor. The connection is made via the power connector or the terminal box.

When connected to the SINAMICS S120 drive system, this overvoltage protection is provided by the SINAMICS system.

Technical specifications

Motor		Built-in holding brake					
Shaft height SH	Type	Holding torque [1]	Direct current	Opening time with varistor	Closing time with varistor	Moment of inertia	Maximum switched energy per brake operation from n = 3000 rpm
		Nm (lb_f-ft)	A	ms	ms	10^{-4} kgm^2 (10^{-3} lb_f-in-s^2)	J
SIMOTICS S-1FT7 with permanent-magnet brake, without backlash, and SIMOTICS S-1FK7 with option N24							
36	1FT703	3 (2.21)	0.3	60	25	0.12 (0.11)	30
48	1FT704	8 (5.90)	0.6	90	30	0.87 (0.77)	270
63	1FT706	18 (13.3)	0.8	150	50	2.84 (2.51)	880
80	1FT708	48 (35.4)	1.0	220	65	15.4 (13.6)	1900
100	1FT710	85 (62.7)	1.6	250	70	27.6 (24.4)	5300
132	1FT713	140 (103)	1.8	350	70	51.0 (45.1)	9800
SIMOTICS S-1FK7 Compact/High Dynamic/High Inertia motors with permanent magnet brake, without backlash							
10	1FK701	0.4 (0.30)	0.3	30	20	0.019 (0.02)	2
28	1FK7022	1.0 (0.74)	0.3	30	20	0.07 (0.06)	8
36	1FK703	1.9 (1.40)	0.3	50	30	0.098 (0.09)	40
48	1FK704	4.0 (2.95)	0.5	70	30	0.32 (0.28)	150
63	1FK706	13 (9.59)	0.8	100	50	0.99 (0.88)	380
80	1FK708	22 (16.2)	0.9	200	60	3.28 (2.90)	1400
100	1FK7100	23 (17.0)	1.0	300	70	7.5 (6.64)	3380
100	1FK7101 1FK7103 1FK7105	43 (31.7)	1.0	300	70	7.5 (6.64)	3380

[1] The holding torque is the highest permissible torque with which the closed brake can be loaded in steady-state operation without slip (holding function when motor is stationary).

© Siemens AG 2017

Overview

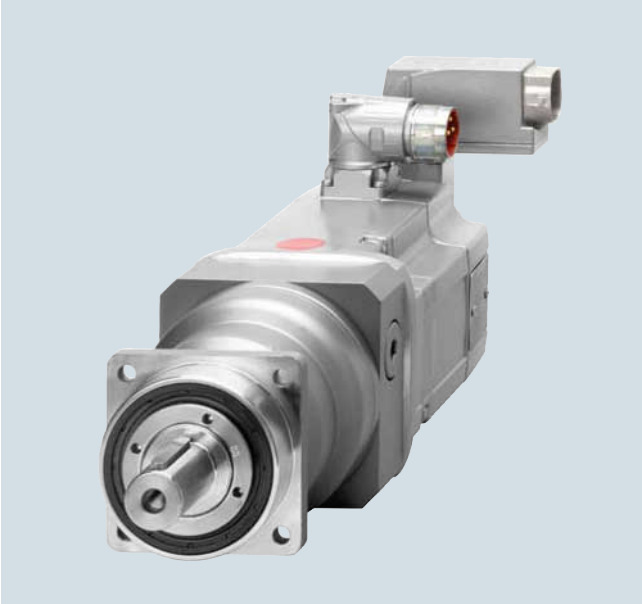

SIMOTICS S-1FT7 motor with mounted SP+ series planetary gearbox

SIMOTICS S-1FT7 motors can be combined with planetary gearboxes
to form compact coaxial drive units. The gearboxes are flanged directly to the drive end of the motors.

When selecting the gearbox, ensure that its maximum permissible input speed is not exceeded by the maximum speed of the motor. In the case of high operating frequencies, allowance must be made for the factor f_2 (see Configuration Manual, SIMOTICS S-1FT7 synchronous motors). The frictional losses of the gearbox must always be taken into account when engineering geared drives.

The gearboxes are only available in non-balanced design.

Benefits

- High efficiency
  Single-stage: > 97%
  Two-stage: > 94%
- Minimum torsional backlash
  Single-stage: ≤ 4 arcmin
  Two-stage: ≤ 6 arcmin
- Power transmission from the central sun wheel via planet wheels
- No shaft deflections in the planet wheel set due to symmetrical force distribution
- Very low moment of inertia and thus short acceleration times of the motors
- Output shaft bearings dimensioned for high cantilever and axial loads with preloaded tapered-roller bearings
- The gearboxes are connected to the motor shaft via an integrated clamping hub. A plain motor shaft extension is necessary for this purpose. Shaft and flange accuracy tolerance N in accordance with DIN 42955 and vibration magnitude grade A in accordance with EN 60034-14 are sufficient. The motor flange is adapted by means of adapter plates.
- Output shaft of gearbox exactly coaxial with the motor
- The gearboxes are enclosed (seal between gearbox and motor) and filled with oil at the factory. They are lubricated and sealed for their service life.
  The gearboxes are suitable for all mounting positions.
- Degree of protection of gearbox: IP65
- Small dimensions
- Low weight

Integration

SIMOTICS S-1FT703 to S-1FT713 motors can be supplied ex works (Siemens AG) complete with flange-mounted planetary gearbox.

The gearboxes assigned to the individual motors and gear ratios i available for these motor/gearbox combinations are listed in the subsequent selection table. The maximum permissible input speed of the gearbox (this is the same as the maximum motor speed) must be taken into account when a gearbox is selected.

The motor/gearbox combinations listed in the selection tables are mainly intended for cycle operation S3-60% (ON time ≤ 60 % and ≤ 20 min). Reduced maximum motor speeds and output torques apply for use in S1 continuous duty (ON time > 60 % or > 20 min). The gearbox temperature must not exceed 90 °C (194 °F).

Follow the instructions contained in the Configuration Manual for SIMOTICS S-1FT7 synchronous motors when assigning gearboxes to the motor.

© Siemens AG 2017

Selection and ordering data

Motor	Planetary gearbox Single-stage			Available gear ratio *i* =				Motor speed, max. S3-60%	Output torque, max. S3-60%	Radial output shaft loading, max. [1]	Axial output shaft loading, max. [1]
Type	Type	Torsional backlash	Gearbox weight, approx.	4	5	7	10	n_{G1} (n_1)	M_{G2} (T_{2B})	F_r (F_{2Rmax})	F_a (F_{2Amax})
		arcmin	kg (lb)					rpm	Nm (lb_f-ft)	N (lb_f)	N (lb_f)
1FT7034	SP 060S-MF1	≤ 4	1.9 (4.19)	✔	✔	✔	–	6000	40 (29.5)	2700 (607)	2400 (540)
1FT7034	SP 075S-MF1	≤ 4	3.9 (8.60)	–	–	–	✔	6000	110 (81.1) (90 (66.4) for i = 10)	4000 (899)	3350 (753)
1FT7036				✔	✔	✔	✔				
1FT7042				✔	✔	✔	✔				
1FT7044				✔	✔	✔	✔				
1FT7046				✔	✔	✔	–				
1FT7046	SP 100S-MF1	≤ 3	7.7 (17.0)	–	–	–	✔	4500	300 (221) (225 (166) for *i* = 10)	6300 (1416)	5650 (1270)
1FT7062				✔	✔	✔	✔				
1FT7064				✔	✔	✔	✔				
1FT7065				✔	✔	✔	–				
1FT7066				✔	✔	✔	✔				
1FT7067				✔	✔	✔	–				
1FT7068				✔	✔	✔	–				
1FT7065	SP 140S-MF1	≤ 3	17.2 (37.9)	–	–	–	✔	4000	600 (443) (480 (354)for *i* = 10)	9450 (2124)	9870 (2219)
1FT7067				–	–	–	✔				
1FT7068				–	–	–	✔				
1FT7082				✔	✔	✔	✔				
1FT7084				✔	✔	✔	✔				
1FT7085				✔	✔	✔	–				
1FT7086				✔	✔	✔	–				
1FT7087				✔	✔	–	–				
1FT7085	SP 180S-MF1	≤ 3	34 (75.0)	–	–	–	✔	3500	1100 (811) (880 (649) for *i* = 10)	14700 (3305)	14150 (3181)
1FT7086				–	–	–	✔				
1FT7087				–	–	✔	✔				
1FT7102				✔	✔	✔	✔				
1FT7105				✔	✔	✔	–				
1FT7108				✔	✔	✔	–				
1FT7105	SP 210S-MF1	≤ 3	56 (123)	–	–	–	✔	2500	2500 (1844) (2400 (1770) for *i* = 7 1900 (1401) for *i* = 10)	21000 (4721)	30000 (6744)
1FT7108				–	–	–	✔				
1FT7132				✔	✔	✔	✔				
1FT7134				✔	✔	✔	–				
1FT7136				✔	✔	✔	–				
1FT7138				✔	✔	✔	–				
1FT7134	SP 240S-MF1	≤ 3	83 (183)	–	–	–	✔	2500	4500 (3319) 4300 (3171) for *i* = 7 3400 (2507) for *i* = 10)	30000 (6744)	33000 (7419)
1FT7136				–	–	–	✔				
1FT7138				–	–	–	–				

Gear shaft	Order code			
With feather key	**J02**	**J03**	**J05**	**J09**
Without feather key	**J22**	**J23**	**J25**	**J29**

Preconditions:

SP+ planetary gearboxes can be mounted with the following motor versions:
- Flange compatible with 1FT6/1FK7
- Plain motor shaft extension, shaft and flange accuracy Tolerance N, without/with holding brake
- Vibration severity grade A/IP65 degree of protection

SP+ planetary gearboxes can therefore only be ordered with these motors: **1FT7...-....1-..G1**, **1FT7...-....1-..H1, 1FT7...-....4-..G1, 1FT7...-....4-..H1**

When ordering a motor with gearbox, **-Z** must be added to the Article No.

Example:
- 1FT7042 motor without holding brake
- With single-stage SP+ planetary gearbox
- With *i* = 5 and gear shaft without feather key

1FT7042-5AF74-1NG1**-Z**
J23

✔ Possible
– Not possible
[1] Referred to output shaft center.

© Siemens AG 2017

Technical specifications

SIMOTICS S-1FT7 motor with SP+ planetary gearbox

Single-stage Type	Gear ratio	Motor speed	Output torque	Moments of inertia of gearboxes (referred to the drive)					
		Continuous duty S1 [1]		1FT703.	1FT704.	1FT706.	1FT708.	1FT710.	1FT713.
	i	n_{rated1}	M_{rated2} (T_{2rated})	J_1	J_1	J_1	J_1	J_1	J_1
		rpm	Nm (lb_f-ft)	$kgcm^2$ (lb_f-in^2)	$kgcm^2$ (lb_f-in^2)	$kgcm^2$ (lb_f-in^2)	$kgcm^2$ (lb_f-in^2)	$kgcm^2$ (lb_f-in^2)	$kgcm^2$ (lb_f-in^2)
SP 060S-MF1	4	3300	26 (19.2)	0.22 (0.08)	–	–	–	–	–
	5	3300	26 (19.2)	0.20 (0.07)	–	–	–	–	–
	7	4000	26 (19.2)	0.18 (0.06)	–	–	–	–	–
SP 075S-MF1	4	2900	75 (55.3)	0.61 (0.21)	0.78 (0.27)	–	–	–	–
	5	2900	75 (55.3)	0.51 (0.17)	0.68 (0.23)	–	–	–	–
	7	3100	75 (55.3)	0.42 (0.14)	0.59 (0.20)	–	–	–	–
	10	3100	52 (38.4)	0.38 (0.13)	0.54 (0.19)	–	–	–	–
SP 100S-MF1	4	2500	180 (133)	–	–	3.04 (1.04)	–	–	–
	5	2500	175 (129)	–	–	2.61 (0.90)	–	–	–
	7	2800	170 (125)	–	–	2.29 (0.78)	–	–	–
	10	2800	120 (88.5)	–	1.38 (0.47)	2.07 (0.71)	–	–	–
SP 140S-MF1	4	2100	360 (266)	–	–	–	11.0 (3.76)	–	–
	5	2100	360 (266)	–	–	–	9.95 (3.40)	–	–
	7	2600	360 (266)	–	–	–	9.01 (3.08)	–	–
	10	2600	220 (162)	–	–	5.28 (1.80)	8.44 (2.88)	–	–
SP 180S-MF1	4	1500	750 (553)	–	–	–	–	33.9 (11.6)	–
	5	1500	750 (553)	–	–	–	–	27.9 (9.53)	–
	7	2300	750 (553)	–	–	–	–	22.2 (7.59)	–
	10	2300	750 (553)	–	–	–	19.2 (6.56)	19.2 (6.56)	–
SP 210S-MF1	4	1200	1500 (1106)	–	–	–	–	–	94.3 (32.2)
	5	1500	1500 (1106)	–	–	–	–	–	76.9 (26.3)
	7	1700	1400 (1033)	–	–	–	–	–	61.5 (21.0)
	10	2000	1000 (738)	–	–	–	–	53.1 (18.1)	53.1 (18.1)
SP 240S-MF1	10	1700	1300 (959)	–	–	–	–	–	70.8 (24.2)

[1] The limit values in the table apply for S1 continuous duty (ON time > 60 % or > 20 min) for a maximum gearbox temperature of 90 °C (194 °F).

© Siemens AG 2017

Selection and ordering data

Motor	Planetary gearbox Two-stage			Available gear ratio *i* =					Motor speed, max. S3-60%	Output torque, max. S3-60%	Radial output shaft loading, max. [1]	Axial output shaft loading, max. [1]
Type	Type	Torsional backlash	Gearbox weight, approx.	16	20	28	40	50	n_{G1} (n_1)	M_{G2} (T_{2B})	F_r (F_{2Rmax})	F_a (F_{2Amax})
		arcmin	kg (lb)						rpm	Nm (lb_f-ft)	N (lb_f)	N (lb_f)
1FT7034	SP 075S-MF2	≤ 6	3.6 (7.94)	✔	✔	✔	–	–	6000	110 (81.1)	4000 (899)	3350 (753)
1FT7036				✔	–	–	–	–				
1FT7042				✔	–	–	–	–				
1FT7034	SP 100S-MF2	≤ 5	7.9 (17.4)	–	–	–	✔	✔	4500	300 (221)	6300 (1416)	5650 (1270)
1FT7036				–	✔	✔	✔	✔				
1FT7042				–	✔	✔	✔	✔				
1FT7044				✔	✔	✔	–	–				
1FT7046				✔	✔	–	–	–				
1FT7062				✔	✔	–	–	–				
1FT7064				✔	–	–	–	–				
1FT7044	SP 140S-MF2	≤ 5	17 (37.5)	–	–	–	✔	✔	4000	600 (443)	9450 (2124)	9870 (2219)
1FT7046				–	–	✔	✔	✔				
1FT7062				–	–	✔	✔	✔				
1FT7064				–	✔	✔	–	–				
1FT7065				✔	✔	–	–	–				
1FT7066				✔	✔	–	–	–				
1FT7067				✔	–	–	–	–				
1FT7068				✔	✔	–	–	–				
1FT7082				✔	✔	–	–	–				
1FT7084				✔	–	–	–	–				
1FT7064	SP 180S-MF2	≤ 5	36.4 (80.3)	–	–	–	✔	✔	4000	1100 (811)	14700 (3305)	14150 (3181)
1FT7065				–	–	✔	✔	–				
1FT7066				–	–	✔	✔	✔				
1FT7067				–	✔	✔	–	–				
1FT7068				–	–	✔	✔	✔				
1FT7082				–	–	✔	✔	✔				
1FT7084				–	✔	✔	–	–				
1FT7085				✔	–	–	–	–				
1FT7086				✔	✔	–	–	–				
1FT7102				✔	✔	–	–	–				
1FT7084	SP 210S-MF2	≤ 5	55 (121)	–	–	–	✔	✔	3500	2400 (1770) (2500 (1844) for i = 20)	21000 (4721)	30000 (6744)
1FT7085				–	✔	✔	–	–				
1FT7086				–	–	✔	✔	–				
1FT7087				✔	✔	✔	–	–				
1FT7102				–	–	✔	–	–				
1FT7105				✔	✔	–	–	–				
1FT7108				✔	–	–	–	–				
1FT7085	SP 240S-MF2	≤ 5	80.6 (178)	–	–	–	✔	✔	3500	4500 (3319) (4000 (2950) for *i* = 40 4300 (3172) for *i* = 50)	30000 (6744)	33000 (7419)
1FT7086				–	–	–	–	✔				
1FT7102				–	–	–	✔	✔				
1FT7105				–	–	✔	✔	–				
1FT7108				–	✔	✔	–	–				
1FT7132				✔	✔	–	–	–				
1FT7134				✔	–	–	–	–				
1FT7136				–	–	–	–	–				
	Gear shaft			Order code								
	With feather key			**J12**	**J13**	**J15**	**J16**	**J17**				
	Without feather key			**J32**	**J33**	**J35**	**J36**	**J37**				

Preconditions, see page 8/54.

✔ Possible
– Not possible
[1] Referred to output shaft center.

© Siemens AG 2017

Technical specifications

SIMOTICS S-1FT7 motor with SP+ planetary gearbox

Two-stage Type	Gear ratio	Motor speed	Output torque	Moments of inertia of gearboxes (referred to the drive)					
		Continuous duty S1 [1]		1FT703.	1FT704.	1FT706.	1FT708.	1FT710.	1FT713.
	i	n_{rated1}	M_{rated2} (T_{2rated})	J_1	J_1	J_1	J_1	J_1	J_1
		rpm	Nm (lb_f-ft)	$kgcm^2$ (lb_f-in^2)	$kgcm^2$ (lb_f-in^2)	$kgcm^2$ (lb_f-in^2)	$kgcm^2$ (lb_f-in^2)	$kgcm^2$ (lb_f-in^2)	$kgcm^2$ (lb_f-in^2)
SP 075S-MF2	16	3500	75 (55.3)	0.23 (0.08)	0.55 (0.19)	–	–	–	–
	20	3500	75 (55.3)	0.20 (0.07)	–	–	–	–	–
	28	3500	75 (55.3)	0.18 (0.06)	–	–	–	–	–
SP 100S-MF2	16	3100	180 (133)	–	0.81 (0.28)	2.18 (0.75)	–	–	–
	20	3100	180 (133)	0.54 (0.19)	0.70 (0.24)	2.07 (0.71)	–	–	–
	28	3100	180 (133)	0.43 (0.15)	0.60 (0.21)	–	–	–	–
	40	3100	180 (133)	0.38 (0.13)	0.55 (0.19)	–	–	–	–
	50	3500	175 (129)	0.38 (0.13)	0.54 (0.19)	–	–	–	–
SP 140S-MF2	16	2900	360 (266)	–	–	3.19 (1.09)	10.3 (3.52)	–	–
	20	2900	360 (266)	–	–	2.71 (0.93)	9.77 (3.34)	–	–
	28	2900	360 (266)	–	1.65 (0.56)	2.34 (0.80)	–	–	–
	40	2900	360 (266)	–	1.40 (0.48)	2.10 (0.72)	–	–	–
	50	3200	360 (266)	–	1.39 (0.48)	2.08 (0.71)	–	–	–
SP 180S-MF2	16	2700	750 (553)	–	–	–	12.4 (4.24)	13.5 (4.61)	–
	20	2700	750 (553)	–	–	–	10.9 (3.73)	12.0 (4.10)	–
	28	2700	750 (553)	–	–	6.32 (2.16)	9.48 (3.24)	–	–
	40	2700	750 (553)	–	–	5.51 (1.88)	8.67 (2.96)	–	–
	50	2900	750 (553)	–	–	5.45 (1.86)	8.61 (2.94)	–	–
SP 210S-MF2	16	2500	1500 (1106)	–	–	–	–	34.5 (11.8)	–
	20	2500	1500 (1106)	–	–	–	–	31.5 (10.8)	–
	28	2500	1500 (1106)	–	–	–	30.0 (10.3)	30.0 (10.3)	–
	40	2500	1500 (1106)	–	–	–	28.5 (9.74)	–	–
	50	2500	1500 (1106)	–	–	–	28.3 (9.67)	–	–
SP 240S-MF2	16	2300	2500 (1844)	–	–	–	–	–	39.2 (13.4)
	20	2500	2500 (1844)	–	–	–	–	34.6 (11.8)	34.6 (11.8)
	28	2500	2500 (1844)	–	–	–	–	30.5 (10.4)	–
	40	2500	2500 (1844)	–	–	–	–	28.2 (9.64)	–
	50	2500	2500 (1844)	–	–	–	27.9 (9.53)	27.9 (9.53)	–

[1] The limit values in the table apply for S1 continuous duty (ON time > 60 % or > 20 min) for a maximum gearbox temperature of 90 °C (194 °F).

© Siemens AG 2017

Overview

SIMOTICS S-1FK7 motor with mounted SP+ planetary gearbox

SIMOTICS S-1FK7 motors can easily be combined with planetary gearboxes to form compact coaxial drive units. The gearboxes are flanged directly to the drive end of the motors.

When selecting the gearbox, ensure that its maximum permissible input speed is not exceeded by the maximum speed of the motor. In the case of high operating frequencies, allowance must be made for the factor f_2 (see Configuration Manual, SIMOTICS S-1FK7 synchronous motors). The frictional losses of the gearbox must always be taken into account when engineering geared drives.

The gearboxes are only available in non-balanced design.

Benefits

- High efficiency
  Single-stage: > 97%
  Two-stage: > 94%
- Minimum torsional backlash
  Single-stage: ≤ 4 arcmin
  Two-stage: ≤ 6 arcmin
- Power transmission from the central sun wheel via planet wheels
- No shaft deflections in the planet wheel set due to symmetrical force distribution
- Very low moment of inertia and thus short acceleration times of the motors
- Output shaft bearings dimensioned for high cantilever and axial loads with preloaded tapered-roller bearings
- The gearboxes are connected to the motor shaft via an integrated clamping hub. A plain motor shaft extension is necessary for this purpose. Shaft and flange accuracy tolerance N in accordance with DIN 42955 and vibration magnitude grade A in accordance with EN 60034-14 are sufficient. The motor flange is adapted by means of adapter plates.
- Output shaft of gearbox exactly coaxial with the motor
- The gearboxes are enclosed (seal between gearbox and motor) and filled with oil at the factory. They are lubricated and sealed for their service life.
  The gearboxes are suitable for all mounting positions.
- Degree of protection of gearbox: IP65
- Small dimensions
- Low weight

Integration

SIMOTICS S-1FK7 motors can be supplied ex works (Siemens AG) in the shaft heights 28 to 100, complete with flange-mounted planetary gearbox.

The gearboxes assigned to the individual motors and gear ratios i available for these motor/gearbox combinations are listed in the subsequent selection table. The maximum permissible input speed of the gearbox (this is the same as the maximum motor speed) must be taken into account when a gearbox is selected.

The motor/gearbox combinations listed in the selection table are mainly intended for cycle operation S3-60% (ON time ≤ 60 % and ≤ 20 min). Reduced maximum motor speeds and output torques apply for use in S1 continuous duty (ON time > 60 % or > 20 min). The gearbox temperature must not exceed 90 °C (194 °F).

Follow the instructions contained in the Configuration Manual for SIMOTICS S-1FK7 synchronous motors when assigning gearboxes to the motor.

© Siemens AG 2017

Selection and ordering data

Motor	**Planetary gearbox Single-stage**			**Available gear ratio *i* =**				Motor speed, max. S3-60%	Output torque, max. S3-60%	Radial output shaft loading, max. [1]	Axial output shaft loading, max. [1]
Type	Type	Torsional backlash	Gearbox weight, approx.	**4**	**5**	**7**	**10**	n_{G1} (n_1)	M_{G2} (T_{2B})	F_r (F_{2Rmax})	F_a (F_{2Amax})
		arcmin	kg (lb)					rpm	Nm (lb_f-ft)	N (lb_f)	N (lb_f)
1FK7022	SP 060S-MF1	≤ 4	1.9 (4.19)	✔	✔	✔	✔	6000	40 (29.5) (32 (23.6) for *i* = 10)	2700 (607)	2400 (540)
1FK7032				✔	✔	✔	✔				
1FK7033				✔	✔	✔	✔				
1FK7034				✔	✔	✔	✔				
1FK7040	SP 075S-MF1	≤ 4	3.9 (8.60)	✔	✔	✔	✔	6000	110 (81.1) (90 (66.4) for *i* = 10)	4000 (899)	3350 (753)
1FK7042				✔	✔	✔	✔				
1FK7043				✔	✔	✔	✔				
1FK7044				✔	✔	✔	✔				
1FK7060	SP 100S-MF1	≤ 3	7.7 (17.0)	✔	✔	✔	✔	4500	300 (221) (225 (166) for *i* = 10)	6300 (1416)	5650 (1270)
1FK7061				✔	✔	✔	✔				
1FK7062				✔	✔	✔	✔				
1FK7063				✔	✔	✔	✔				
1FK7064				✔	✔	✔	✔				
1FK7080	SP 140S-MF1	≤ 3	17.2 (37.9)	✔	✔	✔	✔	4000	600 (443) (480 (354) for *i* = 10)	9450 (2124)	9870 (2219)
1FK7081				✔	✔	✔	✔				
1FK7083				✔	✔	✔	✔				
1FK7084				✔	✔	✔	✔				
1FK7085				✔	✔	✔	✔				
1FK7086				✔	✔	✔	✔				
1FK7100	SP 180S-MF1	≤ 3	34 (75.0)	✔	✔	✔	✔	3500	1100 (811) (880 (649) for *i* = 10)	14700 (3305)	14150 (3181)
1FK7101				✔	✔	✔	✔				
1FK7103				✔	✔	✔	✔				
1FK7105				✔	✔	✔	–				
1FK7105	SP 210S-MF1	≤ 3	56 (123)	–	–	–	✔	2500	2500 (1844) (2400 (1770) for *i* = 7 1900 (1401) for *i* = 10)	21000 (4721)	30000 (6744)
	Gear shaft			Order code							
	With feather key			**J02**	**J03**	**J05**	**J09**				
	Without feather key			**J22**	**J23**	**J25**	**J29**				

Preconditions:

SP+ planetary gearboxes can be mounted with the following motor versions:

- Plain motor shaft extension, shaft and flange accuracy tolerance N, without/with holding brake
- IP65 degree of protection and anthracite paint finish

SP+ planetary gearboxes can therefore only be ordered with these motors:

1FK7 . . . - 2 A . . . - . . ■ 1 Compact
1FK7 . . . - 3 B . . . - . . ■ 1 High Inertia
1FK7 . . . - 4 C . . . - . . ■ 1 High Dynamic
G without brake
H with brake

or

1FK7 0 2 . - 5 A . . . - . . G 5
1FK7 0 2 . - 5 A . . . - . . H 5

When ordering a motor with gearbox, **-Z** must be added to the Article No.

Example:

1FK7042 motor without holding brake
With single-stage SP+ planetary gearbox
with *i* = 7 and gear shaft without feather key.
1FK7042-2AF74-1AG1**-Z**
J25

✔ Possible
– Not possible
[1] Referred to output shaft center.

© Siemens AG 2017

Technical specifications

SIMOTICS S-1FK7 motor with SP+ planetary gearbox

Single-stage Type	Gear ratio	Motor speed	Output torque	Moments of inertia of gearboxes (referred to the drive)					
		Continuous duty S1 [1]		1FK702.	1FK703.	1FK704.	1FK706.	1FK708.	1FK710.
	i	n_{rated1}	M_{rated2} (T_{2rated})	J_1	J_1	J_1	J_1	J_1	J_1
		rpm	Nm (lb_f-ft)	$kgcm^2$ (lb_f-in^2)	$kgcm^2$ (lb_f-in^2)	$kgcm^2$ (lb_f-in^2)	$kgcm^2$ (lb_f-in^2)	$kgcm^2$ (lb_f-in^2)	$kgcm^2$ (lb_f-in^2)
SP 060S-MF1	4	3300	26 (19.2)	0.15 (0.05)	0.22 (0.08)	–	–	–	–
	5	3300	26 (19.2)	0.12 (0.04)	0.20 (0.07)	–	–	–	–
	7	4000	26 (19.2)	0.10 (0.03)	0.18 (0.06)	–	–	–	–
	10	4000	17 (12.5)	0.09 (0.03)	0.17 (0.06)	–	–	–	–
SP 075S-MF1	4	2900	75 (55.3)	–	–	0.78 (0.27)	–	–	–
	5	2900	75 (55.3)	–	–	0.68 (0.23)	–	–	–
	7	3100	75 (55.3)	–	–	0.59 (0.20)	–	–	–
	10	3100	52 (38.4)	–	–	0.54 (0.19)	–	–	–
SP 100S-MF1	4	2500	180 (133)	–	–	–	3.04 (1.04)	–	–
	5	2500	175 (129)	–	–	–	2.61 (0.89)	–	–
	7	2800	170 (125)	–	–	–	2.29 (0.78)	–	–
	10	2800	120 (88.5)	–	–	–	2.07 (0.71)	–	–
SP 140S-MF1	4	2100	360 (266)	–	–	–	–	11.0 (3.76)	–
	5	2100	360 (266)	–	–	–	–	9.95 (3.40)	–
	7	2600	360 (266)	–	–	–	–	9.01 (3.08)	–
	10	2600	220 (162)	–	–	–	–	8.44 (2.88)	–
SP 180S-MF1	4	1500	750 (553)	–	–	–	–	–	33.9 (11.6)
	5	1500	750 (553)	–	–	–	–	–	27.9 (9.53)
	7	2300	750 (553)	–	–	–	–	–	22.2 (7.59)
	10	2300	750 (553)	–	–	–	–	–	19.2 (6.56)
SP 210S-MF1	10	2000	1000 (738)	–	–	–	–	–	53.1 (18.1)

[1] The limit values in the table apply for S1 continuous duty (ON time > 60 % or > 20 min) for a maximum gearbox temperature of 90 °C (194 °F).

© Siemens AG 2017

Selection and ordering data

Motor	Planetary gearbox Two-stage			Available gear ratio i =					Motor speed, max. S3-60%	Output torque, max. S3-60%	Radial output shaft loading, max. [1]	Axial output shaft loading, max. [1]
Type	Type	Torsional backlash	Gearbox weight, approx.	16	20	28	40	50	n_{G1} (n_1)	M_{G2} (T_{2B})	F_r (F_{2Rmax})	F_a (F_{2Amax})
		arcmin	kg (lb)						rpm	Nm (lb_f-ft)	N (lb_f)	N (lb_f)
1FK7022	SP 060S-MF2	≤ 6	2 (4.41)	✔	✔	✔	–	–	6000	40 (29.5)	2700 (607)	2400 (540)
1FK7032				✔	✔	–	–	–				
1FK7033				✔	✔	–	–	–				
1FK7022	SP 075S-MF2	≤ 6	3.6 (7.94)	–	–	–	✔	✔	6000	110 (81.1)	4000 (899)	3350 (753)
1FK7032				–	–	✔	✔	✔				
1FK7033				–	–	✔	✔	✔				
1FK7034				✔	✔	✔	–	–				
1FK7040				✔	✔	✔	–	–				
1FK7042				✔	✔	–	–	–				
1FK7043				✔	–	–	–	–				
1FK7034	SP 100S-MF2	≤ 5	7.9 (17.4)	–	–	–	✔	✔	4500	300 (221)	6300 (1416)	2400 (540)
1FK7040				–	–	–	✔	✔				
1FK7042				–	–	✔	✔	✔				
1FK7043				–	✔	✔	✔	✔				
1FK7044				✔	✔	✔	✔	–				
1FK7060				✔	✔	✔	–	–				
1FK7061				✔	✔	–	–	–				
1FK7062				✔	✔	–	–	–				
1FK7044	SP 140S-MF2	≤ 5	17 (37.5)	–	–	–	–	✔	4000	600 (443)	9450 (2124)	9870 (2219)
1FK7060				–	–	–	✔	✔				
1FK7061				–	–	✔	✔	✔				
1FK7062				–	–	✔	✔	–				
1FK7063				✔	✔	✔	–	–				
1FK7064				✔	✔	✔	–	–				
1FK7080				✔	✔	✔	✔	–				
1FK7081				✔	✔	✔	–	–				
1FK7083				✔	✔	–	–	–				
1FK7084				✔	–	–	–	–				
	Gear shaft			Order code								
	With feather key			**J12**	**J13**	**J15**	**J16**	**J17**				
	Without feather key			**J32**	**J33**	**J35**	**J36**	**J37**				

Preconditions:

SP+ planetary gearboxes can be mounted with the following motor versions:

- Plain motor shaft extension, shaft and flange accuracy tolerance N, without/with holding brake
- IP65 degree of protection and anthracite paint finish

SP+ planetary gearboxes can therefore only be ordered with these motors:

1FK7 . . . - 2 A . . . - . . ■ 1 Compact
1FK7 . . . - 3 B . . . - . . ■ 1 High Inertia
1FK7 . . . - 4 C . . . - . . ■ 1 High Dynamic
G without brake
H with brake

or

1FK7 0 2 . - 5 A . . . - . . G 5
1FK7 0 2 . - 5 A . . . - . . H 5

When ordering a motor with gearbox, **-Z** must be added to the Article No.

Example:

1FK7042 motor without holding brake with two-stage SP+ planetary gearbox with i = 28 and gear shaft without feather key
1FK7042-2AF74-1AG1**-Z**
J35

✔ Possible
– Not possible
[1] Referred to output shaft center at 100 rpm.

© Siemens AG 2017

Selection and ordering data

Motor	Planetary gearbox Two-stage			Available gear ratio *i* =					Motor speed, max. S3-60%	Output torque, max. S3-60%	Radial output shaft loading, max. [1]	Axial output shaft loading, max. [1]
Type	Type	Torsional backlash	Gearbox weight, approx.	16	20	28	40	50	n_{G1}	M_{G2}	F_r	F_a
									(n_1)	(T_{2B})	(F_{2Rmax})	(F_{2Amax})
		arcmin	kg (lb)						rpm	Nm (lb_f-ft)	N (lb_f)	N (lb_f)
1FK7062	SP 180S-MF2	≤ 5	36.4 (80.3)	–	–	–	–	✔	4000	1100 (811)	14700 (3305)	14150 (3181)
1FK7063				–	–	–	✔	✔				
1FK7064				–	–	–	✔	✔				
1FK7080				–	–	–	–	✔				
1FK7081				–	–	–	✔	✔				
1FK7083				–	–	✔	–	–				
1FK7084				–	✔	✔	–	–				
1FK7085				✔	✔	–	–	–				
1FK7086				✔	✔	–	–	–				
1FK7100				✔	✔	✔	–	–				
1FK7101				✔	✔	–	–	–				
1FK7103				✔	–	–	–	–				
1FK7083	SP 210S-MF2	≤ 6	55 (121)	–	–	–	✔	✔	3500	2400 (1770) (2500 (1844) for *i* = 20)	21000 (4721)	30000 (6744)
1FK7084				–	–	–	✔	✔				
1FK7085				–	–	✔	✔	–				
1FK7086				–	–	✔	–	–				
1FK7100				–	–	–	✔	✔				
1FK7101				–	–	✔	–	–				
1FK7103				–	✔	–	–	–				
1FK7105				✔	✔	–	–	–				
1FK7101	SP 240S-MF2	≤ 6	80.6 (178)	–	–	–	✔	✔	3500	4500 (3319) (4000 (2950) for *i* = 40 4300 (3172) for *i* = 50)	30000 (6744)	33000 (7419)
1FK7103				–	–	✔	✔	–				
1FK7105				–	–	✔	–	–				
	Gear shaft			Order code								
	With feather key			**J12**	**J13**	**J15**	**J16**	**J17**				
	Without feather key			**J32**	**J33**	**J35**	**J36**	**J37**				

Preconditions:

SP+ planetary gearboxes can be mounted with the following motor versions:

- Plain motor shaft extension, shaft and flange accuracy tolerance N, without/with holding brake
- IP65 degree of protection and anthracite paint finish

SP+ planetary gearboxes can therefore only be ordered with these motors:

1FK7 . . . - 2 A . . . - . . ■ 1 Compact
1FK7 . . . - 3 B . . . - . . ■ 1 High Inertia
1FK7 . . . - 4 C . . . - . . ■ 1 High Dynamic
G without brake
H with brake

or

1FK7 0 2 . - 5 A . . . - . . G 5
1FK7 0 2 . - 5 A . . . - . . H 5

When ordering a motor with gearbox, **-Z** must be added to the Article No.

Example:

1FK7042 motor without holding brake
with two-stage SP+ planetary gearbox
with *i* = 16 and gear shaft without feather key
1FK7103-2AC74-1AG1-**Z**
J32

✔ Possible
– Not possible
[1] Referred to output shaft center.

© Siemens AG 2017

Technical specifications

SIMOTICS S-1FK7 motor with SP+ planetary gearbox

Two-stage Type	Gear ratio	Motor speed	Output torque	Moments of inertia of gearboxes (referred to the drive)					
		Continuous duty S1 [1]		1FK702.	1FK703.	1FK704.	1FK706.	1FK708.	1FK710.
	i	n_{rated1}	M_{rated2} (T_{2rated})	J_1	J_1	J_1	J_1	J_1	J_1
		rpm	Nm (lb_f-ft)	$kgcm^2$ (lb_f-in^2)	$kgcm^2$ (lb_f-in^2)	$kgcm^2$ (lb_f-in^2)	$kgcm^2$ (lb_f-in^2)	$kgcm^2$ (lb_f-in^2)	$kgcm^2$ (lb_f-in^2)
SP 060S-MF2	16	4400	26 (19.2)	0.08 (0.03)	0.17 (0.06)	–	–	–	–
	20	4400	26 (19.2)	0.07 (0.02)	0.16 (0.06)	–	–	–	–
	28	4400	26 (19.2)	0.06 (0.02)	–	–	–	–	–
SP 075S-MF2	16	3500	75 (55.3)	–	0.23 (0.08)	0.55 (0.19)	–	–	–
	20	3500	75 (55.3)	–	0.20 (0.07)	0.53 (0.18)	–	–	–
	28	3500	75 (55.3)	–	0.18 (0.06)	0.50 (0.17)	–	–	–
	40	3500	75 (55.3)	0.10 (0.03)	0.17 (0.06)	–	–	–	–
	50	3800	75 (55.3)	0.10 (0.03)	0.16 (0.06)	–	–	–	–
SP 100S-MF2	16	3100	180 (133)	–	–	0.81 (0.28)	2.18 (0.75)	–	–
	20	3100	180 (133)	–	–	0.70 (0.24)	2.07 (0.71)	–	–
	28	3100	180 (133)	–	–	0.60 (0.21)	1.97 (0.67)	–	–
	40	3100	180 (133)	–	0.38 (0.13)	0.55 (0.19)	–	–	–
	50	3500	175 (129)	–	0.38 (0.13)	0.54 (0.19)	–	–	–
SP 140S-MF2	16	2900	360 (266)	–	–	–	3.19 (1.09)	10.3 (3.52)	–
	20	2900	360 (266)	–	–	–	2.71 (0.93)	9.77 (3.34)	–
	28	2900	360 (266)	–	–	–	2.34 (0.80)	9.41 (3.22)	–
	40	2900	360 (266)	–	–	–	2.10 (0.72)	9.16 (3.13)	–
	50	3200	360 (266)	–	–	1.39 (0.48)	2.08 (0.71)	–	–
SP 180S-MF2	16	2700	750 (553)	–	–	–	–	12.4 (4.24)	13.5 (4.61)
	20	2700	750 (553)	–	–	–	–	10.9 (3.73)	12.0 (4.10)
	28	2700	750 (553)	–	–	–	–	9.48 (3.24)	10.6 (3.62)
	40	2700	750 (553)	–	–	–	5.51 (1.88)	8.67 (2.96)	–
	50	2900	750 (553)	–	–	–	5.45 (1.86)	8.61 (2.94)	–
SP 210S-MF2	16	2500	1500 (1106)	–	–	–	–	–	34.5 (11.8)
	20	2500	1500 (1106)	–	–	–	–	–	31.5 (10.8)
	28	2500	1500 (1106)	–	–	–	–	30.0 (10.3)	30.0 (10.3)
	40	2500	1500 (1106)	–	–	–	–	28.5 (9.74)	28.5 (9.74)
	50	2500	1500 (1106)	–	–	–	–	28.3 (9.67)	28.3 (9.67)
SP 240S-MF2	28	2500	2500 (1844)	–	–	–	–	–	30.5 (10.4)
	40	2500	2500 (1844)	–	–	–	–	–	28.2 (9.64)
	50	2500	2500 (1844)	–	–	–	–	–	27.9 (9.53)

[1] The limit values in the table apply for S1 continuous duty (ON time > 60 % or > 20 min) for a maximum gearbox temperature of 90 °C (194 °F).

© Siemens AG 2017

Overview

SIMOTICS S-1FK7 motor with mounted LP+ planetary gearbox

SIMOTICS S-1FK7 motors can easily be combined with planetary gearboxes to form compact coaxial drive units. The gearboxes are flanged directly to the drive end of the motors.

When selecting the gearbox, ensure that its maximum permissible input speed is not exceeded by the maximum speed of the motor. In the case of high operating frequencies, allowance must be made for the factor f_2 (see Configuration Manual, SIMOTICS S-1FK7 synchronous motors). The frictional losses of the gearbox must always be taken into account when engineering geared drives.

The gearboxes are only available in non-balanced design and with feather key.

Benefits

- High efficiency, single-stage: > 97%
- Minimum torsional backlash Single-stage: ≤ 10 arcmin
- Power transmission from the central sun wheel via planet wheels
- No shaft deflections in the planet wheel set due to symmetrical force distribution
- The gearboxes are connected to the motor shaft via an integrated clamping hub. A plain motor shaft extension is necessary for this purpose. Shaft and flange accuracy tolerance N in accordance with DIN 42955 and vibration magnitude grade A in accordance with EN 60034-14 are sufficient. The motor flange is adapted by means of adapter plates.
- Output shaft of gearbox exactly coaxial with the motor
- The gearboxes are suitable for all mounted systems.
- The gearboxes are enclosed (seal between gearbox and motor) and filled with grease in the factory.
  They are lubricated and sealed for their service life.
- Degree of protection of gearbox: IP64
- Small dimensions
- Low weight

Integration

SIMOTICS S-1FK7 motors can be supplied ex works (Siemens AG) in the shaft heights 36 to 100, complete with flange-mounted planetary gearbox.

The gearboxes assigned to the individual motors and gear ratios *i* available for these motor/gearbox combinations are listed in the subsequent selection table. The maximum permissible input speed of the gearbox (this is the same as the maximum motor speed) must be taken into account when a gearbox is selected.

The motor/gearbox combinations listed in the selection table are mainly intended for cycle operation S3-60% (ON time ≤ 60 % and ≤ 20 min). Reduced maximum motor speeds and output torques apply for use in S1 continuous duty (ON time > 60 % or > 20 min). The gearbox temperature must not exceed 90 °C (194 °F).

Follow the instructions contained in the Configuration Manual for SIMOTICS S-1FK7 synchronous motors when assigning gearboxes to the motor.

© Siemens AG 2017

Selection and ordering data

Motor	**Planetary gearbox LP+ Single-stage** Torsional backlash ≤ 12 arcmin		**Available gear ratio *i* =**		Input speed, max. S3-60%	Output torque, max. S3-60%		Output shaft radial force, max. [1]	Gearbox moment of inertia
Type	Type	Gearbox weight, approx. kg (lb)	**5**	**10**	n_{G1} rpm	M_{G2} at i = 5 Nm (lb_f-ft)	M_{G2} at i = 10 Nm (lb_f-ft)	F_r N (lb_f)	J_G at i = 5/10 10^{-4}kgm^2 (10^{-3} lb_f-in-s^2)
1FK7022	LP 050S-MF1	0.75 (1.65)	✔	–	8000	14 (10.3)	13 (9.59)	650 (146)	0.055 (0.05)
1FK7022	LP 070S-MF1	2 (4.41)	–	✔	6000	40 (29.5)	37 (27.3)	1450 (326)	0.28 (0.25)
1FK7032			✔	✔					
1FK7033			✔	✔					
1FK7034			✔	✔					
1FK7040	LP 090S-MF1	4 (8.82)	✔	✔	6000	100 (73.8)	90 (66.4)	2400 (540)	1.77 (1.57)
1FK7042			✔	✔					
1FK7043			✔	✔					
1FK7044			✔	✔					
1FK7060	LP 120S-MF1	8.6 (19.0)	✔	✔	4800	250 (184)	220 (162)	4600 (1034)	5.42 (4.80)
1FK7061			✔	✔					
1FK7062			✔	✔					
1FK7063			✔	✔					
1FK7064			✔	–					
1FK7080	LP 155S-MF1	17 (37.5)	✔	✔	3600	500 (369)	400 (295)	7500 (1686)	25.7 (22.8)
1FK7081			✔	✔					
1FK7083			✔	✔					
1FK7084			✔	✔					
1FK7085			✔	✔					
1FK7086			✔	✔					
1FK7100			✔	✔					
1FK7101			✔	–					
1FK7103			✔	–					
1FK7105			✔	–					
	Gear shaft With feather key		Order code **V40**	**V42**					

Preconditions:

LP+ planetary gearboxes can be mounted on the following motor versions:

- Plain motor shaft extension, shaft and flange accuracy tolerance N, without/with holding brake
- IP64 degree of protection and anthracite paint finish

LP+ planetary gearboxes can therefore only be ordered with these motors:

1FK7 . . . - 2 A . 7 . - 1 . ■ 0 Compact
1FK7 . . . - 3 B . 7 . - 1 . ■ 0 High Inertia
1FK7 . . . - 4 C . 7 . - 1 . ■ 0 High Dynamic
G without brake
H with brake

or

1FK7 0 2 . - 5 A . 7 . - 1 . G 3
1FK7 0 2 . - 5 A . 7 . - 1 . H 3

When ordering a motor with gearbox, **-Z** must be added to the Article No.

Example:

1FK7042 motor with holding brake
with single-stage LP+ planetary gearbox
with i = 5 and gear shaft with feather key.
1FK7042-3BK74-1AH0-**Z**
V40

✔ Possible
– Not possible
[1] Referred to output shaft center at 100 rpm.

Continuous duty

Continuous duty is permissible at rated speed and rated torque. The gearbox temperature must not exceed 90 °C (194 °F).

Planetary gearbox LP+ Single-stage Torsional backlash ≤ 10 arcmin	Rated input speed	Rated output torque	
Type	n_{G1} rpm	M_{G2} at i = 5 **Nm** (lb_f-ft)	M_{G2} at i = 10 **Nm** (lb_f-ft)
LP 050S-MF1	4000	6.5 (4.79)	–
LP 070S-MF1	3700	21 (15.5)	19 (14.0)
LP 090S-MF1	3400	50 (36.9)	45 (33.2)
LP 120S-MF1	2600	125 (92.2)	110 (81.1)
LP 155S-MF1	2000	350 (258)	200 (148)

© Siemens AG 2017

SIMOTICS S-1FT7 with M17 and M23 signal connector – Natural cooling

Dimensional drawings

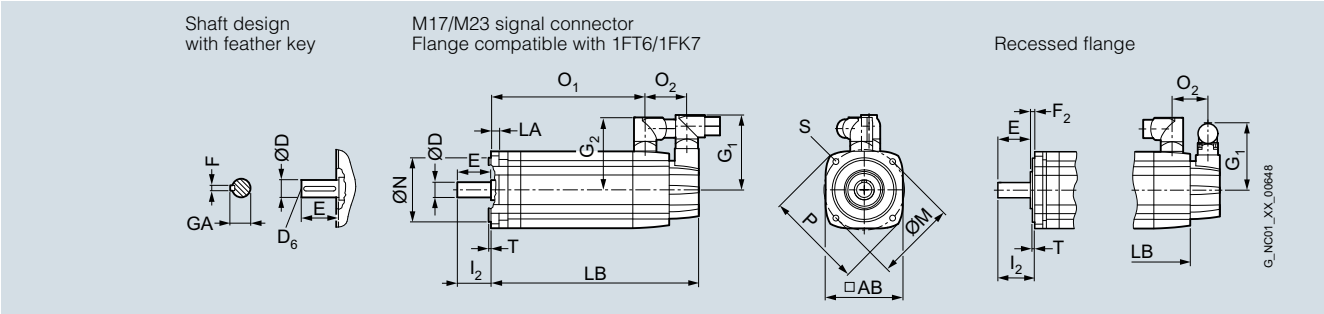

For motor		Dimensions in mm (inches)																	
												Signal connector	Connector size		Shaft extension DE				
												M17 M23	Size 1	Size 1.5					
Shaft height	Type	IEC	P	N	LA	M	AB	T	O_2	S	G_1		G_2	G_2	**D**	D_6	E	GA	F
SIMOTICS S-1FT7 natural cooling, with connector, without/with brake																			
36	1FT703 . -5A		90 (3.54)	60 (2.36)	8 (0.31)	75 (2.95)	72 (2.83)	3 (0.12)	48 (1.89)	6.5 (0.26)	77 (3.03)	82 (3.23)	80 (3.15)	–	**14 (0.55)**	M5	30 (1.18)	16 (0.63)	5 (0.20)
48	1FT704 . -5A		120 (4.72)	80 (3.15)	10 (0.39)	100 (3.94)	96 (3.78)	3 (0.12)	53 (2.09)	6.5 (0.26)	93 (3.66)	82 (3.23)	90 (3.54)	–	**19 (0.75)**	M6	40 (1.57)	21.5 (0.85)	6 (0.24)
63	1FT706 . -5A		155 (6.10)	110 (4.33)	10 (0.39)	130 (5.12)	126 (4.96)	3.5 (0.14)	53 (2.09)	9 (0.35)	93 (3.66)	82 (3.23)	104 (4.09)	–	**24 (0.94)**	M8	50 (1.97)	27 (1.06)	8 (0.31)
80	1FT708 . -5A		195 (7.68)	130 (5.12)	11.5 (0.45)	165 (6.50)	155 (6.10)	3.5 (0.14)	51 (2.01)	11 (0.43)	93 (3.66)	82 (3.23)	119 (4.69)	140 (5.51)	**32 (1.26)**	M12	58 (2.28)	35 (1.38)	10 (0.39)
100	1FT710 . -5A		245 (9.65)	180 (7.09)	13 (0.51)	215 (8.46)	196 (7.72)	4 (0.16)	56 (2.20)	14 (0.55)	93 (3.66)	82 (3.23)	–	160 (6.30)	**38 (1.50)**	M12	80 (3.15)	41 (1.61)	10 (0.39)

			Recessed flange						Flange compatible with 1FT6/1FK7				
					without brake		with brake			without brake		with brake	
Shaft height	Type	IEC	F_2	l_2	LB	O_1	LB	O_1	l_2	LB	O_1	LB	O_1
36	1FT7034		5.5 (0.22)	36.5 (1.44)	189 (7.44)	127 (5.00)	216 (8.50)	154 (6.06)	30 (1.18)	195 (7.68)	133 (5.24)	222 (8.74)	160 (6.30)
	1FT7036				237 (9.33)	175 (6.89)	264 (10.39)	202 (7.95)		243 (9.57)	181 (7.13)	270 (10.63)	208 (8.19)
48	1FT7042		5.5 (0.22)	46 (1.81)	163 (6.42)	96 (3.78)	195 (7.68)	128 (5.04)	40 (1.57)	169 (6.65)	102 (4.02)	201 (7.91)	134 (5.28)
	1FT7044				213 (8.39)	146 (5.75)	245 (9.65)	178 (7.01)		219 (8.62)	152 (5.98)	251 (9.88)	184 (7.24)
	1FT7046				253 (9.96)	186 (7.32)	285 (11.22)	218 (8.58)		259 (10.20)	192 (7.56)	291 (11.46)	224 (8.82)
63	1FT7062		6 (0.24)	56.5 (2.22)	167 (6.57)	99 (3.90)	202 (7.95)	135 (5.31)	50 (1.97)	173 (6.81)	106 (4.17)	208 (8.19)	141 (5.55)
	1FT7064				198 (7.80)	131 (5.16)	233 (9.17)	166 (6.54)		205 (8.07)	137 (5.39)	240 (9.45)	173 (6.81)
	1FT7066				230 (9.06)	162 (6.38)	265 (10.43)	198 (7.80)		236 (9.29)	169 (6.65)	272 (10.71)	204 (8.03)
	1FT7068				277 (10.91)	210 (8.27)	312 (12.28)	245 (9.65)		284 (11.18)	216 (8.50)	319 (12.56)	252 (9.92)
80	1FT7082		6 (0.24)	64.5 (2.54)	184 (7.24)	124 (4.88)	241 (9.49)	176 (6.93)	58 (2.28)	196 (7.72)	130 (5.12)	248 (9.76)	183 (7.20)
	1FT7084				236 (9.29)	175 (6.89)	293 (11.54)	228 (8.98)		247 (9.72)	182 (7.17)	299 (11.77)	234 (9.21)
	1FT7086				287 (11.30)	227 (8.94)	345 (13.58)	279 (10.98)		299 (11.77)	234 (9.21)	351 (13.82)	286 (11.26)
100	1FT7102		6.5 (0.26)	87 (3.43)	209 (8.23)	144 (5.67)	266 (10.47)	196 (7.72)	80 (3.15)	221 (8.70)	151 (5.94)	273 (10.75)	203 (7.99)
	1FT7105				296 (11.65)	231 (9.09)	353 (13.90)	283 (11.14)		307 (12.09)	238 (9.37)	360 (14.17)	290 (11.42)
	1FT7108				365 (14.37)	300 (11.81)	422 (16.61)	352 (13.86)		377 (14.84)	307 (12.09)	429 (16.89)	359 (14.13)

© Siemens AG 2017

Dimensional drawings

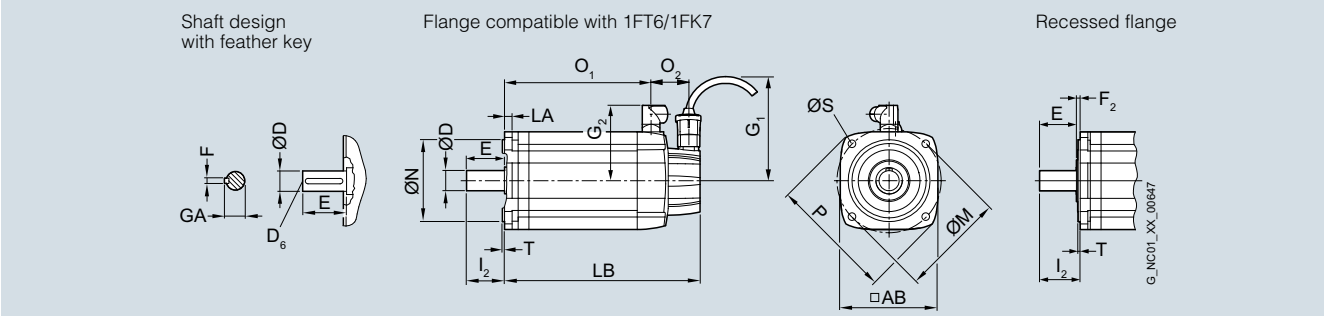

For motor		Dimensions in mm (inches)										Connector size		Shaft extension DE				
												Size 1	Size 1.5					
Shaft height	Type	IEC	P	N	LA	M	AB	T	O_2	S	G_1	G_2	G_2	**D**	D_6	E	GA	F
SIMOTICS S-1FT7 natural cooling, with connector, without/with brake																		
36	1FT703 . -5A		90 (3.54)	60 (2.36)	8 (0.31)	75 (2.95)	72 (2.83)	3 (0.12)	48 (1.89)	6.5 (0.26)	104.5 (4.11)	80 (3.15)	–	**14 (0.55)**	M5	30 (1.18)	16 (0.63)	5 (0.20)
48	1FT704 . -5A		120 (4.72)	80 (3.15)	10 (0.39)	100 (3.94)	96 (3.78)	3 (0.12)	53 (2.09)	6.5 (0.26)	104.5 (4.11)	90 (3.54)	–	**19 (0.75)**	M6	40 (1.57)	21.5 (0.85)	6 (0.24)
63	1FT706 . -5A		155 (6.10)	110 (4.33)	10 (0.39)	130 (5.12)	126 (4.96)	3.5 (0.14)	53 (2.09)	9 (0.35)	104.5 (4.11)	104 (4.09)	–	**24 (0.94)**	M8	50 (1.97)	27 (1.06)	8 (0.31)
80	1FT708 . -5A		195 (7.68)	130 (5.12)	11.5 (0.45)	165 (6.50)	155 (6.10)	3.5 (0.14)	51 (2.01)	11 (0.43)	104.5 (4.11)	119 (4.69)	140 (5.51)	**32 (1.26)**	M12	58 (2.28)	35 (1.38)	10 (0.39)
100	1FT710 . -5A		245 (9.65)	180 (7.09)	13 (0.51)	215 (8.46)	196 (7.72)	4 (0.16)	56 (2.20)	14 (0.55)	104.5 (4.11)	–	160 (6.30)	**38 (1.50)**	M12	80 (3.15)	41 (1.61)	10 (0.39)

			Recessed flange						Flange compatible with 1FT6/1FK7				
					without brake		with brake			without brake		with brake	
Shaft height	Type	IEC	F_2	I_2	LB	O_1	LB	O_1	I_2	LB	O_1	LB	O_1
36	1FT7034		5.5 (0.22)	36.5 (1.44)	189 (7.44)	127 (5.00)	216 (8.50)	154 (6.06)	30 (1.18)	196 (7.72)	133 (5.24)	223 (8.78)	160 (6.30)
	1FT7036				237 (9.33)	175 (6.89)	264 (10.39)	202 (7.95)		244 (9.61)	181 (7.13)	271 (10.67)	208 (8.19)
48	1FT7042		5.5 (0.22)	46 (1.81)	158 (6.22)	96 (3.78)	190 (7.48)	128 (5.04)	40 (1.57)	164 (6.46)	102 (4.02)	196 (7.72)	134 (5.28)
	1FT7044				208 (8.19)	146 (5.75)	240 (9.45)	178 (7.01)		214 (8.43)	152 (5.98)	246 (9.69)	184 (7.24)
	1FT7046				248 (9.76)	186 (7.32)	280 (11.02)	218 (8.58)		254 (10.00)	192 (7.56)	286 (11.26)	224 (8.82)
63	1FT7062		6 (0.24)	56.5 (2.22)	161 (6.34)	99 (3.90)	197 (7.76)	135 (5.31)	50 (1.97)	168 (6.61)	106 (4.17)	203 (7.99)	141 (5.55)
	1FT7064				193 (7.60)	131 (5.16)	228 (8.98)	166 (6.54)		200 (7.87)	137 (5.39)	235 (9.25)	173 (6.81)
	1FT7066				225 (8.86)	162 (6.38)	260 (10.24)	198 (7.80)		231 (9.09)	169 (6.65)	267 (10.51)	204 (8.03)
	1FT7068				272 (10.71)	210 (8.27)	307 (12.09)	245 (9.65)		279 (10.98)	216 (8.50)	314 (12.36)	252 (9.92)
80	1FT7082		6 (0.24)	64.5 (2.54)	189 (7.44)	124 (4.88)	236 (9.29)	176 (6.93)	58 (2.28)	191 (7.52)	130 (5.12)	243 (9.57)	183 (7.20)
	1FT7084				236 (9.29)	175 (6.89)	288 (11.34)	228 (8.98)		242 (9.53)	182 (7.17)	294 (11.57)	234 (9.21)
	1FT7086				287 (11.30)	227 (8.94)	340 (13.39)	279 (10.98)		294 (11.57)	234 (9.21)	346 (13.62)	286 (11.26)
100	1FT7102		6.5 (0.26)	87 (3.43)	209 (8.23)	144 (5.67)	261 (10.28)	196 (7.72)	80 (3.15)	216 (8.50)	151 (5.94)	268 (10.55)	203 (7.99)
	1FT7105				296 (11.65)	231 (9.09)	348 (13.70)	283 (11.14)		303 (11.93)	238 (9.37)	355 (13.98)	290 (11.42)
	1FT7108				365 (14.37)	300 (11.81)	417 (16.42)	352 (13.86)		372 (14.65)	307 (12.09)	424 (16.69)	359 (14.13)

© Siemens AG 2017

SIMOTICS S-1FT7 with M17 and M23 signal connector – Natural cooling

Dimensional drawings

Version with connector

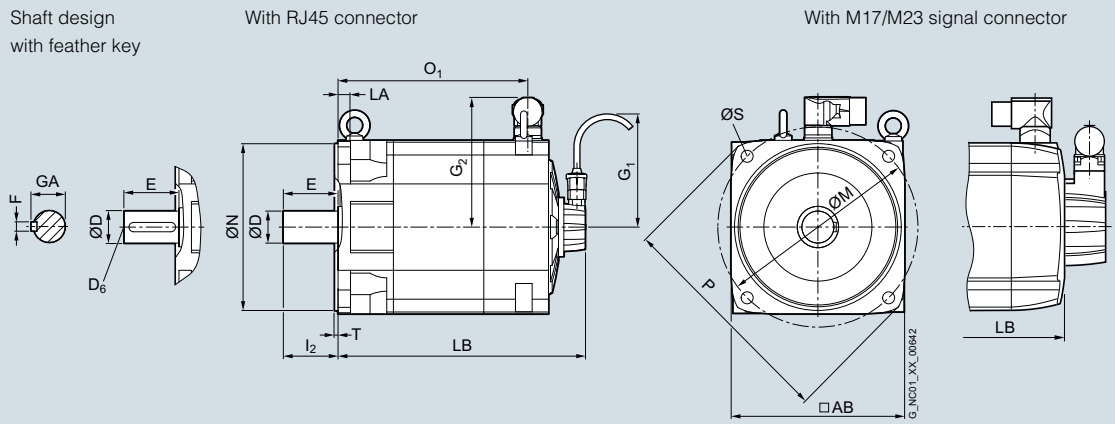

Version with terminal box

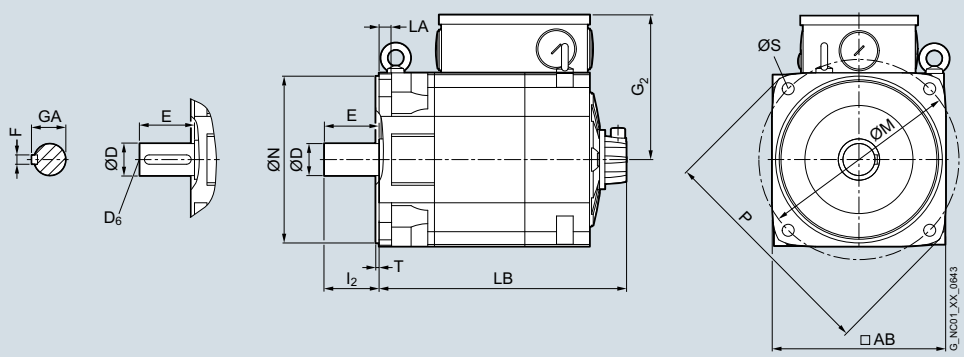

For motor		Dimensions in mm (inches)																	
											Connector size		Terminal box	Shaft extension DE				
											Size 1.5	Size 3						
Shaft height	Type	IEC	P	N	LA	M	AB	T	l_2	S	G_1	G_2	G_2	**D**	D_6	E	GA	F
SIMOTICS S-1FT7 natural cooling, with connector/with terminal box, without/with brake																		
132	1FT713 . -5A		340 (13.39)	250 (9.84)	18 (0.71)	300 (11.81)	260 (10.24)	5 (0.20)	82 (3.23)	18 (0.71)	193.5 (7.62)	203 (7.99)	215.5 (8.48)	**48 (1.89)**	M16	82 (3.23)	51.5 (2.03)	14 (0.55)

			without brake				with brake				G		
			Signal connector		Connector size		Signal connector		Connector size				
			RJ45	M17 M23	Size 1.5	Size 3	RJ45	M17 M23	Size 1.5	Size 3	RJ45	M17	M23
Shaft height	Type	IEC	LB		O_1	O_1	LB		O_1	O_1			
132	1FT7132-5A		370.5 (14.59)	375.5 (14.78)	284.5 (11.20)	265.5 (10.45)	431 (16.97)	436 (17.97)	345 (13.58)	326 (12.83)	104.5 (4.11)	82 (3.23)	93 (3.65)
	1FT7134-5A		415.5 (16.36)	420.5 (16.56)	329.5 (12.97)	310.5 (12.22)	476 (18.74)	481 (18.94)	390 (15.35)	371 (14.61)			
	1FT7136-5A		460.5 (18.13)	465.5 (18.53)	374.5 (14.74)	355.5 (14.00)	521 (20.51)	526 (20.71)	435 (17.13)	416 (16.38)			
	1FT7138-5A		500.5 (19.70)	505.5 (19.90)	414.5 (16.32)	395.5 (15.57)	561 (22.09)	566 (22.28)	475 (18.70)	456 (17.95)			

© Siemens AG 2017

Dimensional drawings

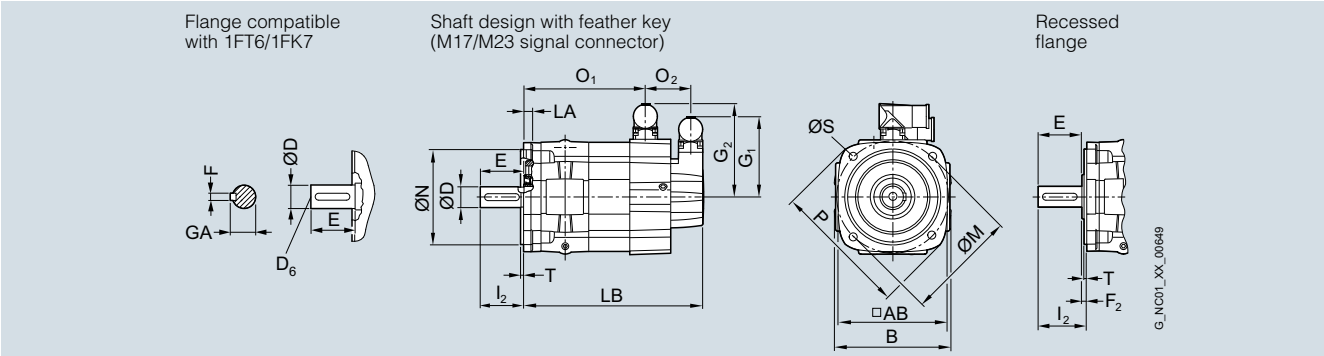

For motor		Dimensions in mm (inches)																
											Signal connector		Power connector			Connector		
											M17	M23	Size 1	Size 1.5	Size 3	Size 1	Size 1.5	Size 3
Shaft height	Type	IEC	P	B	N	LA	M	AB	T	S			G_2	G_2	G_2	O_2	O_2	O_2
SIMOTICS S-1FT7 water cooling, with connector, without/with brake																		
63	1FT706 . - . W		155 (6.10)	135 (5.31)	110 (4.33)	10 (0.39)	130 (5.12)	126 (4.96)	3.5 (0.14)	9 (0.35)	82 (3.23)	93 (3.66)	108 (4.25)	132.5 (5.22)	–	52 (2.05)	57 (2.24)	–
80	1FT708 . - . W		194 (7.68)	165 (6.50)	130 (5.12)	11.5 (0.45)	165 (6.50)	155 (6.10)	3.5 (0.14)	11 (0.43)	82 (3.23)	93 (3.66)	–	140.5 (5.53)	168.5 (6.63)	–	50 (1.97)	67 (2.64)
100	1FT710 . -5W		245 (9.65)	206 (8.11)	180 (7.09)	13 (0.51)	215 (8.46)	196 (7.72)	4 (0.16)	14 (0.55)	82 (3.23)	93 (3.66)	–	159.5 (6.28)	187.5 (7.38)	–	55 (2.17)	72 (2.83)

			Flange compatible with 1FT6/1FK7 without/with brake					Recessed flange without/with brake						Shaft extension DE				
					Power connector						Power connector							
					Size 1	Size 1.5	Size 3				Size 1	Size 1.5	Size 3					
Shaft height	Type	IEC	I_2	LB	O_1	O_1	O_1	F_2	I_2	LB	O_1	O_1	O_1	D	D_6	E	GA	F
63	1FT7062		50 (1.97)	208 (8.19)	141 (5.55)	–	–	6 (0.24)	56.5 (2.22)	202 (7.95)	135 (5.31)	–	–	**24 (0.94)**	M8	50 (1.97)	27 (1.06)	8 (0.31)
	1FT7064			240 (9.45)	173 (6.81)	–	–			233 (9.17)	166 (6.54)	–	–					
	1FT7065			292 (11.50)	220 (8.66)	–	–			286 (11.26)	214 (8.43)	–	–					
	1FT7066			272 (10.71)	204 (8.03)	–	–			265 (10.43)	198 (7.80)	–	–					
	1FT7067			332 (13.07)	260 (10.24)	–	–			325 (12.80)	254 (10.00)	–	–					
	1FT7068			319 (12.56)	252 (9.92)	–	–			312 (12.28)	245 (9.65)	–	–					
80	1FT7082		58 (2.28)	248 (9.76)	–	183 (7.20)	–	6 (0.24)	64.5 (2.54)	241 (9.49)	–	176 (6.93)	–	**32 (1.26)**	M12	58 (2.28)	35 (1.38)	10 (0.39)
	1FT7084			299 (11.77)	–	234 (9.21)	–			293 (11.54)	–	228 (8.98)	–					
	1FT7085			319 (12.56)	–	254 (10.00)	237 (9.33)			312.5 (12.30)	–	247 (9.72)	231 (9.09)					
	1FT7086			351 (13.82)	–	286 (11.26)	–			345 (13.58)	–	279 (10.98)	–					
	1FT7087			379 (14.92)	–	314 (12.36)	297 (11.69)			372.5 (14.67)	–	307 (12.09)	291 (11.46)					
100	1FT7102		80 (3.15)	273 (10.75)	–	203 (7.99)	187 (7.36)	6.5 (0.26)	87 (3.43)	266 (10.47)	–	196 (7.72)	180 (7.09)	**38 (1.50)**	M12	80 (3.15)	41 (1.61)	10 (0.39)
	1FT7105			360 (14.17)	–	290 (11.42)	273 (10.75)			353 (13.90)	–	283 (11.14)	266 (10.47)					
	1FT7108			429 (16.89)	–	359 (14.13)	342 (13.46)			422 (16.61)	–	352 (13.86)	335 (13.19)					

© Siemens AG 2017

SIMOTICS S-1FT7 with RJ45 signal connector (DRIVE-CLiQ) – Water cooling

Dimensional drawings

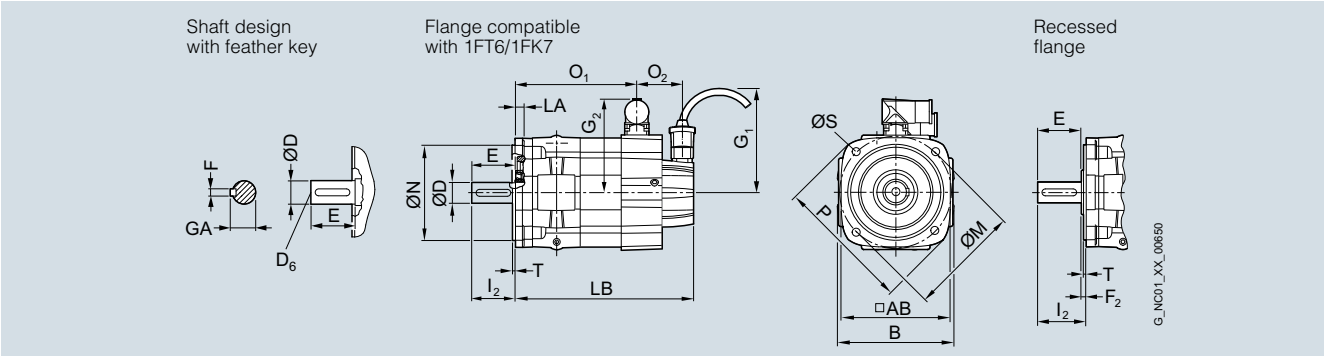

For motor		Dimensions in mm (inches)									Signal connector	Power connector			Connector		
												Size 1	Size 1.5	Size 3	Size 1	Size 1.5	Size 3
Shaft height	Type	IEC	P	B	N	LA	M	AB	T	S	G_1	G_2	G_2	G_2	O_2	O_2	O_2
SIMOTICS S-1FT7 water cooling, with connector, without/with brake																	
63	1FT706 . - . W		155 (6.10)	135 (5.31)	110 (4.33)	10 (0.39)	130 (5.12)	126 (4.96)	3.5 (0.14)	9 (0.35)	104.5 (4.11)	108 (4.25)	132.5 (5.22)	–	50 (1.97)	55 (2.17)	–
80	1FT708 . - . W		194 (7.68)	165 (6.50)	130 (5.12)	11.5 (0.45)	165 (6.50)	155 (6.10)	3.5 (0.14)	11 (0.43)	104.5 (4.11)	–	140.5 (5.53)	168.5 (6.63)	–	48 (1.89)	63 (2.48)
100	1FT710 . -5W		245 (9.65)	206 (8.11)	180 (7.09)	13 (0.51)	215 (8.46)	196 (7.72)	4 (0.16)	14 (0.55)	104.5 (4.11)	–	159.5 (6.28)	187.5 (7.38)	–	53 (2.09)	69 (2.72)

								Flange compatible with 1FT6/1FK7						Shaft extension DE				
			without/with brake					without/with brake										
					Power connector						Power connector							
					Size 1	Size 1.5	Size 3				Size 1	Size 1.5	Size 3					
Shaft height	Type	IEC	l_2	LB	O_1	O_1	O_1	F_2	l_2	LB	O_1	O_1	O_1	D	D_6	E	GA	F
63	1FT7062		50 (1.97)	204 (8.03)	141 (5.55)	–	–	6 (0.24)	56.5 (2.22)	197 (7.76)	135 (5.31)	–	–	**24 (0.94)**	M8	50 (1.97)	27 (1.06)	8 (0.31)
	1FT7064			235 (9.25)	173 (6.81)	–	–			229 (9.02)	166 (6.54)	–	–					
	1FT7065			287 (11.30)	220 (8.66)	–	–			281 (11.06)	214 (8.43)	–	–					
	1FT7066			267 (10.51)	204 (8.03)	–	–			260 (10.24)	198 (7.80)	–	–					
	1FT7067			327 (12.87)	260 (10.24)	–	–			321 (12.64)	254 (10.00)	–	–					
	1FT7068			314 (12.36)	252 (9.92)	–	–			308 (12.13)	245 (9.65)	–	–					
80	1FT7082		58 (2.28)	243 (9.57)	–	183 (7.20)	–	6 (0.24)	64.5 (2.54)	237 (9.33)	–	176 (6.93)	–	**32 (1.26)**	M12	58 (2.28)	35 (1.38)	10 (0.39)
	1FT7084			295 (11.61)	–	234 (9.21)	–			288 (11.34)	–	228 (8.98)	–					
	1FT7085			314 (12.36)	–	254 (10.00)	237 (9.33)			308 (12.13)	–	247 (9.72)	231 (9.09)					
	1FT7086			346 (13.62)	–	286 (11.26)	–			340 (13.39)	–	279 (10.98)	–					
	1FT7087			374 (14.72)	–	314 (12.36)	297 (11.69)			368 (14.49)	–	307 (12.09)	291 (11.46)					
100	1FT7102		80 (3.15)	267 (10.51)	–	203 (7.99)	187 (7.36)	6.5 (0.26)	87 (3.43)	262 (10.31)	–	196 (7.72)	180 (7.09)	**38 (1.50)**	M12	80 (3.15)	41 (1.61)	10 (0.39)
	1FT7105			355 (13.98)	–	290 (11.42)	273 (10.75)			348 (13.70)	–	283 (11.14)	266 (10.47)					
	1FT7108			424 (16.69)	–	359 (14.13)	342 (13.46)			417 (16.42)	–	352 (13.86)	335 (13.19)					

© Siemens AG 2017

SIMOTICS S-1FT7 with RJ45 (DRIVE-CLiQ) and M23 signal connector – Forced ventilation

Dimensional drawings

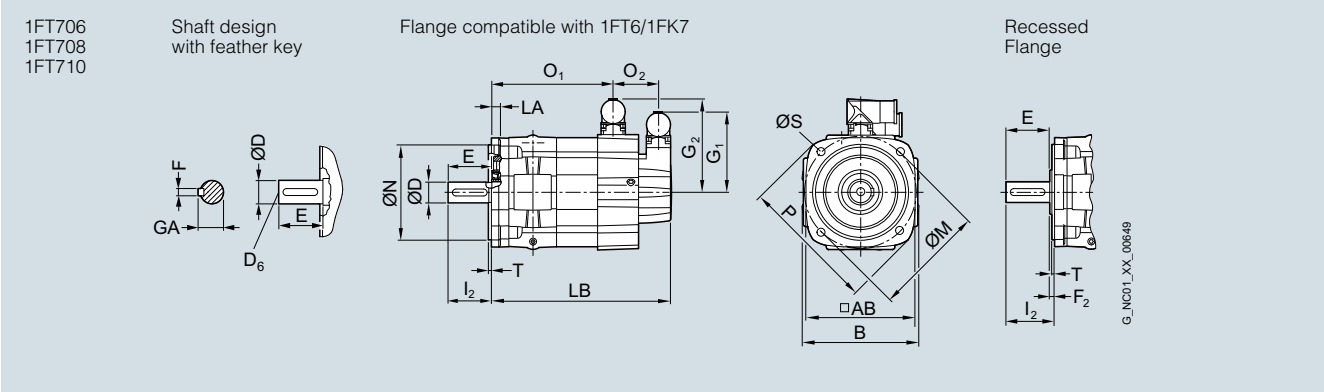

For motor		Dimensions in mm (inches)															
											Connector size						Fan
											Size 1.5	Size 3					
Shaft height	Type	IEC	P	B	N	LA	M	AB	T	S	G_2	G_2	G_1	H	H_1	H_2
SIMOTICS S-1FT7 forced ventilation, with connector, without/with brake																	
63	1FT706 . - . S		155 (6.10)	158 (6.22)	110 (4.33)	10 (0.39)	130 (5.12)	126 (4.96)	3.5 (0.14)	11 (0.43)	125 (4.92)	–	102 (4.02)	26 (1.02)	143 (5.36)	135 (5.31)
80	1FT708 . - . S		194 (7.68)	186 (7.32)	130 (5.12)	11.5 (0.45)	165 (6.50)	155 (6.10)	3.5 (0.14)	11 (0.43)	139 (5.47)	167 (6.57)	137.5 (5.41)	27 (1.06)	177 (6.97)	186.5 (7.34)
100	1FT710 . -5S		245 (9.65)	224 (8.82)	180 (7.09)	13 (0.51)	215 (8.46)	196 (7.72)	4 (0.16)	14 (0.55)	159 (6.26)	187 (7.36)	151 (5.94)	27 (1.06)	220 (8.66)	222 (8.74)

			Flange compatible with 1FT6/1FK7					Recessed flange						Shaft extension DE				
				without brake		with brake				without brake		with brake						
Shaft height	Type	IEC	l_2	LB	O_1	LB	O_1	F_2	l_2	LB	O_1	LB	O_1	D	D_6	E	GA	F
63	1FT7065-7S		50 (1.97)	380 (14.96)	220 (8.66)	380 (14.96)	220 (8.66)	6 (0.24)	56.5 (2.22)	373.5 (14.70)	214 (8.43)	373.5 (14.70)	214 (8.43)	24 **(0.94)**	M8	50 (1.97)	27 (1.06)	8 (0.31)
	1FT7067-7S			420 (16.54)	260 (10.24)	420 (16.54)	260 (10.24)			413.5 (16.28)	254 (10.00)	413.5 (16.28)	254 (10.00)					
80	1FT7084-5S		58 (2.28)	342 (13.46)	182 (7.17)	394 (15.51)	234 (9.21)	6 (0.24)	64.5 (2.54)	336 (13.23)	175 (6.89)	387 (15.24)	228 (8.98)	**32 (1.26)**	M12	58 (2.28)	35 (1.38)	10 (0.39)
	1FT7085-7S			414 (16.30)	254 (10.00)	414 (16.30)	254 (10.00)			408 (16.06)	247 (9.72)	408 (16.06)	247 (9.72)					
	1FT7086-5S			394 (15.51)	234 (9.21)	446 (17.56)	286 (11.26)			387 (15.24)	227 (8.94)	440 (17.32)	379 (14.92)					
	1FT7087-7S			474 (18.66)	314 (12.36)	474 (18.66)	314 (12.36)			468 (18.43)	307 (12.09)	468 (18.43)	307 (12.09)					
100	1FT7105		80 (3.15)	404 (15.91)	238 (9.37)	456 (17.95)	290 (11.42)	6.5 (0.26)	87 (3.43)	397 (15.63)	231 (9.09)	449 (17.68)	283 (11.14)	**38 (1.50)**	M12	80 (3.15)	41 (1.61)	10 (0.39)
	1FT7108			473 (18.62)	307 (12.09)	525 (20.67)	359 (14.13)			466 (18.35)	300 (11.81)	518 (20.39)	352 (13.86)					

© Siemens AG 2017

SIMOTICS S-1FK7 – Natural cooling

Dimensional drawings

1FK701
1FK702

Shaft design
with feather key

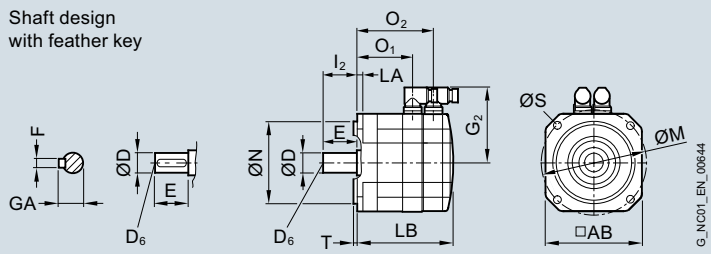

For motor		Dimensions in mm (inches)													
											Shaft extension DE				
Shaft height	Type	IEC	N	LA	M	AB	T	G_2	l_2	S	**D**	D_6	E	GA	F
SIMOTICS S-1FK7 natural cooling, without/with brake															
20	1FK701		30 (1.18)	7 (0.28)	46 (1.81)	40 (1.57)	2.5 (0.10)	66 (2.60)	18 (0.71)	4.5 (0.18)	**8** (0.31)	–	18 (0.71)	8.8 (0.35)	2 (0.08)
28	1FK702		40 (1.57)	10 (0.39)	63 (2.48)	55 (2.17)	2.5 (0.10)	75 (2.95)	20 (0.79)	5.4 (0.21)	**9** **(0.35)**	M3	20 (0.79)	10.2 (0.40)	3 (0.12)

For motor		Encoder system: Resolver Absolute encoders AM16S/R / AM15DQ						Encoder system: Incremental encodersIC2048S/R / IC22DQ Absolute encodersAM2048S/R AM512S/R / AM20DQ AM32S/R / AM16DQ					
		Dimensions in mm (inches)											
		without brake			with brake			without brake			with brake		
Shaft height	Type	LB	O_1	O_2	LB	O_1	O_2	LB	O_1	O_2	LB	O_1	O_2
20	1FK7011	140 (5.51)	89 (3.50)	118 (4.65)	140 (5.51)	89 (3.50)	118 (4.65)	155 (6.10)	89 (3.50)	118 (4.65)	155 (6.10)	89 (3.50)	118 (4.65)
	1FK7015	165 (6.50)	114 (4.59)	143 (5.63)	165 (6.50)	114 (4.49)	143 (5.63)	180 (7.09)	114 (4.49)	143 (5.63)	180 (7.09)	114 (4.49)	143 (5.63)
28	1FK7022	153 (6.02)	95 (3.74)	128 (5.04)	175 (6.89)	95 (3.74)	150 (5.91)	178 (7.01)	95 (3.74)	128 (5.04)	200 (7.87)	95 (3.74)	150 (5.91)

© Siemens AG 2017

Dimensional drawings

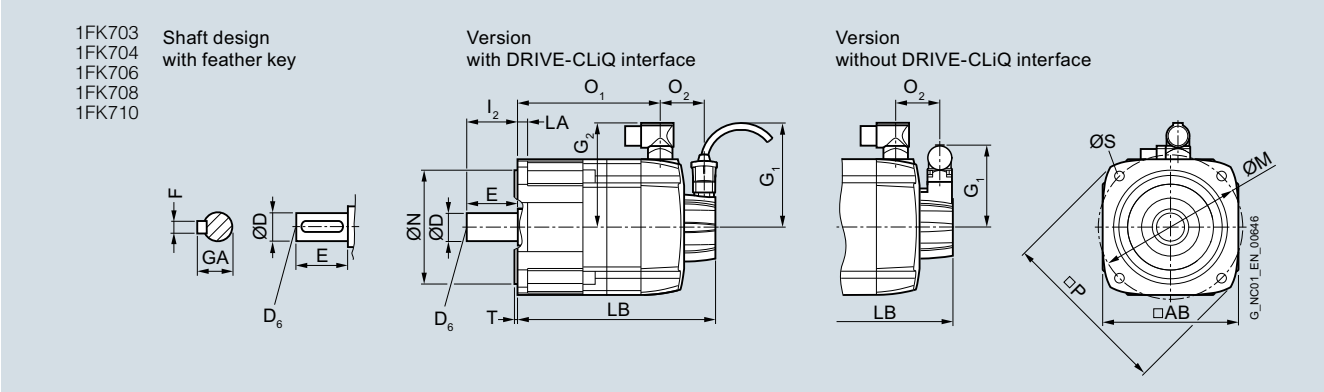

For motor		DQI encoder with DRIVE-CLiQ interface (without resolver)/ Encoder system without DRIVE-CLiQ interface (without resolver) Dimensions in mm (inches)													
											Shaft extension DE				
Shaft height	Type	IEC	P	N	LA	M	AB	T	l_2	S	**D**	D_6	E	GA	F
SIMOTICS S-1FK7 Compact/High Dynamic, without/with brake – Dimensions dependent on shaft height															
36	1FK703		90 (3.54)	60 (2.36)	8 (0.31)	75 (2.95)	72 (2.83)	3 (0.12)	30 (1.18)	6.5 (0.26)	**14** (0.55)	M5	30 (1.18)	16 (0.63)	5 (0.20)
SIMOTICS S-1FK7 Compact/High Dynamic/High Inertia, without/with brake – Dimensions dependent on shaft height															
48	1FK704		120 (4.72)	80 (3.15)	10 (0.39)	100 (3.94)	96 (3.78)	3 (0.12)	40 (1.57)	6.5 (0.26)	**19** (0.75)	M6	40 (1.57)	21.5 (0.85)	6 (0.24)
63	1FK706		155 (6.10)	110 (4.33)	10 (0.39)	130 (5.12)	126 (4.96)	3.5 (0.14)	50 (1.97)	9 (0.35)	**24** (0.94)	M8	50 (1.97)	27 (1.06)	8 (0.31)
80	1FK708		194 (7.64)	130 (5.12)	11.5 (0.45)	165 (6.50)	155 (6.10)	3.5 (0.14)	58 (2.28)	11 (0.43)	**32** (1.26)	M12	58 (2.28)	35 (1.38)	10 (0.39)
SIMOTICS S-1FK7 Compact/High Inertia, without/with brake – Dimensions dependent on shaft height															
100	1FK710		245 (9.65)	180 (7.09)	13 (0.51)	215 (8.46)	192 (7.56)	4 (0.16)	80 (3.15)	14 (0.55)	**38** (1.50)	M12	80 (3.15)	41 (1.61)	10 (0.39)

For motor		DQI encoder with DRIVE-CLiQ interface (without resolver) Dimensions in mm (inches)							Encoder system without DRIVE-CLiQ interface (without resolver)						
					without brake		with brake					without brake		with brake	
Shaft height	Type	G_1	G_2	O_2	LB	O_1	LB	O_1	G_1	G_2	O_2	LB	O_1	LB	O_1
SIMOTICS S-1FK7 High Inertia – Dimensions dependent on overall length															
48	1FK7042-3B	104.5 (4.11)	90 (3.54)	50 (1.97)	187 (7.36)	125 (4.92)	219 (8.62)	157 (6.18)	93 (3.66)	90 (3.54)	52 (2.05)	192 (7.56)	125 (4.92)	224 (8.82)	157 (6.18)
63	1FK7060-3B	104.5 (4.11)	104 (4.09)	50 (1.97)	182 (7.17)	120 (4.72)	217 (8.54)	155 (6.10)1	93 (3.66)	104 (4.09)	52 (2.05)	187 (7.36)	120 (4.72)	222 (8.74)	155 (6.10)
	1FK7062-3B				216 (8.50)	153 (6.02)	251 (9.88)	189 (7.44)				221 (8.70)	153 (6.02)	256 (10.08)	189 (7.44)
80	1FK7081-3B	104.5 (4.11)	119 (4.69)	48 (1.89)	211 (8.31)	151 (5.94)	264 (10.39)	203 (7.99)	93 (3.66)	119 (4.69)	50 (1.97)	216 (8.50)	151 (5.94)	269 (10.59)	203 (7.99)
	1FK7084-3B				270 (10.63)	209 (8.23)	322 (12.68)	262 (10.31)				275 (10.83)	209 (8.23)	327 (12.87)	262 (10.31)
100	1FK7100-3B	104.5 (4.11)	137 (5.39)	53 (2.09)	183 (7.20)	118 (4.65)	220 (8.66)	170 (6.69)	93 (3.66)	137 (5.39)	55 (2.17)	188 (7.40)	118 (4.65)	225 (8.86)	170 (6.69)
	1FK7101-3B		158 (6.22)		209 (8.23)	144 (5.67)	261 (10.28)	196 (7.72)		158 (6.22)		214 (8.43)	144 (5.67)	266 (10.47)	196 (7.72)
	1FK7103-3B				235 (9.25)	170 (6.69)	287 (11.30)	222 (8.74)				240 (9.45)	170 (6.69)	292 (11.50)	222 (8.74)
	1FK7105-3B				287 (11.30)	222 (8.74)	339 (13.35)	274 (10.79)				292 (11.50)	222 (8.74)	344 (13.54)	274 (10.79)

© Siemens AG 2017

SIMOTICS S-1FK7 – Natural cooling

Dimensional drawings

For motor		DQI encoder with DRIVE-CLiQ interface (without resolver) Dimensions in mm (inches)							Encoder system without DRIVE-CLiQ interface (without resolver)						
					without brake		with brake					without brake		with brake	
Shaft height	Type	G_1	G_2	O_2	LB	O_1	LB	O_1	G_1	G_2	O_2	LB	O_1	LB	O_1
SIMOTICS S-1FK7 Compact – Dimensions dependent on overall length															
36	1FK7032-2A	104.5 (4.11)	78 (3.07)	50 (1.97)	173 (6.81)	111 (4.37)	200 (7.87)	138 (5.43)	77 (3.03)	78 (3.07)	47 (1.85)	173 (6.81)	111 (4.37)	200 (7.87)	138 (5.43)
	1FK7034-2A				198 (7.80)	136 (5.35)	225 (8.86)	263 (6.42)				198 (7.80)	136 (5.35)	225 (8.86)	163 (6.42)
48	1FK7040-2A	104.5 (4.11)	90 (4.09)	50 (1.97)	147 (6.61)	85 (4.17)	179 (7.99)	117 (5.55)	93 (3.66)	90 (4.09)	52 (2.05)	152 (6.81)	85 (4.17)	184 (8.19)	117 (5.55)
	1FK7042-2A				174 (6.85)	112 (4.41)	206 (8.11)	144 (5.67)				179 (7.05)	112 (4.41)	211 (8.31)	144 (5.57)
63	1FK7060-2A	104.5 (4.11)	104 (4.09)	50 (1.97)	168 (6.61)	106 (4.17)	203 (7.99)	141 (5.55)	93 (3.66)	104 (4.09)	52 (2.05)	173 (6.81)	106 (4.17)	208 (8.19)	141 (5.55)
	1FK7062-2A				190 (7.48)	128 (5.04)	226 (8.90)	163 (6.42)				195 (7.68)	128 (5.04)	231 (9.09)	163 (6.42)
	1FK7063-2A				213 (8.39)	151 (5.94)	248 (9.76)	186 (7.32)				218 (8.58)	151 (5.94)	253 (9.96)	186 (7.32)
80	1FK7080-2A	104.5 (4.11)	119 (4.69)	48 (1.89)	171 (6.73)	111 (4.37)	223 (8.78)	163 (6.42)	93 (3.66)	119 (4.69)	50 (1.97)	176 (6.93)	111 (4.37)	228 (8.98)	163 (6.42)
	1FK7081-2A				190 (7.48)	130 (5.12)	242 (9.53)	182 (7.17)				196 (7.68)	130 (5.12)	247 (9.72)	182 (7.17)
	1FK7083-2A				209 (8.23)	149 (5.87)	261 (10.28)	201 (7.91)				214 (8.43)	149 (5.87)	266 (10.47)	201 (7.91)
	1FK7084-2A				229 (9.02)	168 (6.61)	281 (11.06)	221 (8.70)				234 (9.21)	168 (6.61)	286 (11.26)	221 (8.70)
100	1FK7100-2A	104.5 (4.11)	137 (5.39)	53 (2.09)	183 (7.20)	118 (4.65)	220 (8.66)	170 (6.69)	93 (3.66)	137 (5.39)	55 (2.17)	188 (7.40)	118 (4.65)	225 (8.86)	170 (6.69)
	1FK7101-2A		158 (6.22)		209 (8.23)	144 (5.67)	261 (10.28)	196 (7.72)		158 (6.22)		214 (8.43)	144 (5.67)	266 (10.47)	196 (7.72)
	1FK7103-2A				235 (9.25)	170 (6.69)	287 (11.30)	222 (8.74)				240 (9.45)	170 (6.69)	292 (11.50)	222 (8.74)
	1FK7105-2A				287 (11.30)	222 (8.74)	339 (13.35)	274 (10.79)				292 (11.50)	222 (8.74)	344 (13.54)	274 (10.79)
SIMOTICS S-1FK7 High Dynamic – Dimensions dependent on overall length															
36	1FK7033-4C	104.5 (4.11)	78 (3.07)	50 (1.97)	183 (7.20)	121 (4.76)	210 (8.27)	148 (5.83)	77 (3.03)	78 (3.07)	47 (1.85)	183 (7.20)	121 (4.76)	210 (8.27)	148 (5.83)
48	1FK7043-4C	104.5 (4.11)	90 (3.54)	56 (2.20)	200 (7.87)	132 (5.20)	232 (9.13)	164 (6.46)	93 (3.66)	90 (3.54)	58 (2.28)	205 (8.07)	132 (5.20)	237 (9.33)	164 (6.46)
	1FK7044-4C				225 (8.86)	157 (6.18)	257 (10.12)	189 (7.44)				230 (9.06)	157 (6.18)	262 (10.31)	189 (7.44)
63	1FK7061-4C	104.5 (4.11)	104 (4.09)	50 (1.97)	203 (7.99)	141 (5.55)	238 (9.37)	176 (6.93)	93 (3.66)	104 (4.09)	52 (2.05)	208 (8.19)	141 (5.55)	243 (9.57)	176 (6.93)
	1FK7064-4C				267 (10.51)	205 (8.07)	302 (11.89)	240 (9.45)				272 (10.71)	205 (8.07)	307 (12.09)	240 (9.45)
80	1FK708.-4CC	104.5 (4.11)	119 (4.69)	48 (1.89)	257 (10.12)	197 (7.76)	309 (12.17)	249 (9.80)	93 (3.66)	119 (4.69)	50 (1.97)	262 (10.31)	197 (7.76)	314 (12.36)	249 (9.80)
	1FK708.-4CF		139 (5.47)							139 (5.47)					

© Siemens AG 2017

Dimensional drawings

1FK703
1FK704
1FK706
1FK708
1FK710

Shaft design
with feather key

Version
with resolver

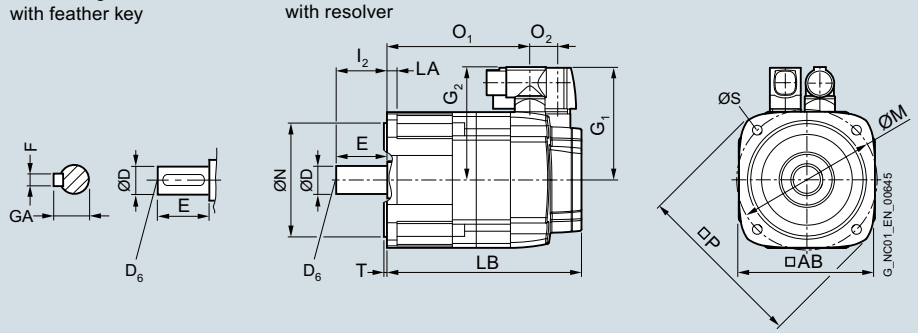

For motor		Resolver with/without DRIVE-CLiQ interface Dimensions in mm (inches)													
											Shaft extension DE				
Shaft height	Type	IEC	P	N	LA	M	AB	T	l_2	S	**D**	D_6	E	GA	F
SIMOTICS S-1FK7 Compact/High Dynamic, with/without brake – Dimensions dependent on shaft height															
36	1FK703		90 (3.54)	60 (2.36)	8 (0.31)	75 (2.95)	72 (2.83)	3 (0.12)	30 (1.18)	6.5 (0.26)	**14** (0.55)	M5	30 (1.18)	16 (0.63)	5 (0.20)
48	1FK704		120 (4.72)	80 (3.15)	10 (0.39)	100 (3.94)	96 (3.78)	3 (0.12)	40 (1.57)	6.5 (0.26)	**19** (0.75)	M6	40 (1.57)	21.5 (0.85)	6 (0.24)
63	1FK706		155 (6.10)	110 (4.33)	10 (0.39)	130 (5.12)	126 (4.96)	3.5 (0.14)	50 (1.97)	9 (0.35)	**24** (0.94)	M8	50 (1.97)	27 (1.06)	8 (0.31)
80	1FK708		194 (7.64)	130 (5.12)	11.5 (0.45)	165 (6.50)	155 (6.10)	3.5 (0.14)	58 (2.28)	11 (0.43)	**32** (1.26)	M12	58 (2.28)	35 (1.38)	10 (0.39)
SIMOTICS S-1FK7 Compact, without/with brake – Dimensions dependent on shaft height															
100	1FK710		245 (9.65)	180 (7.09)	13 (0.51)	215 (8.46)	192 (7.56)	4 (0.16)	80 (3.15)	14 (0.55)	**38** (1.50)	M12	80 (3.15)	41 (1.61)	10 (0.39)

© Siemens AG 2017

SIMOTICS S-1FK7 – Natural cooling

Dimensional drawings

For motor		Resolver with/without DRIVE-CLiQ interface Dimensions in mm (inches)						
					without brake		with brake	
Shaft height	Type	G_1	G_2	O_2	LB	O_1	LB	O_1
SIMOTICS S-1FK7 Compact – Dimensions dependent on overall length								
36	1FK7032-2A	80 (3.15)	80 (3.15)	15 (0.59)	153 (6.02)	117 (4.61)	180 (7.09)	144 (5.67)
	1FK7034-2A				178 (7.01)	142 (5.59)	205 (8.07)	169 (6.65)
48	1FK7040-2A	90 (3.54)	90 (3.54)	23 (0.91)	132 (5.20)	85 (3.35)	164 (6.46)	117 (4.61)
	1FK7042-2A				160 (6.30)	112 (4.41)	192 (7.56)	144 (5.67)
63	1FK7060-2A	103 (4.06)	104 (4.09)	23 (0.91)	153 (6.02)	106 (4.17)	189 (7.44)	141 (5.55)
	1FK7062-2A				176 (6.93)	128 (5.04)	211 (8.31)	163 (6.42)
	1FK7063-2A				198 (7.80)	151 (5.94)	234 (9.21)	186 (7.32)
80	1FK7080-2A	118 (4.65)	119 (4.69)	21 (0.83)	157 (6.18)	111 (4.37)	209 (8.23)	163 (6.42)
	1FK7081-2A				176 (6.93)	130 (5.12)	228 (8.98)	182 (7.17)
	1FK7083-2A				195 (7.68)	149 (5.87)	247 (9.72)	201 (7.91)
	1FK7084-2A				214 (8.43)	168 (6.61)	266 (10.47)	221 (8.70)
100	1FK7100-2A	136 (5.35)	137 (5.39)	26 (1.02)	169 (6.65)	118 (4.65)	206 (8.11)	155 (6.10)
	1FK7101-2A		158 (6.22)		195 (7.68)	144 (5.67)	247 (9.72)	196 (7.72)
	1FK7103-2A				221 (8.70)	170 (6.69)	273 (10.75)	222 (8.74)
	1FK7105-2A				273 (10.75)	222 (8.74)	325 (12.80)	274 (10.79)
SIMOTICS S-1FK7 High Dynamic – Dimensions dependent on overall length								
36	1FK7033-4C	81 (3.19)	80 (3.15)	15 (0.59)	163 (6.42)	127 (5.00)	190 (7.48)	154 (6.06)
48	1FK7043-4C	90 (3.54)	90 (3.54)	23 (0.9)	186 (7.32)	138 (5.43)	218 (8.58)	170 (6.69)
	1FK7044-4C				211 (8.31)	163 (6.42)	243 (9.57)	195 (7.68)
63	1FK7061-4C	103 (4.06)	104 (4.09)	23 (0.9)	188 (7.40)	141 (5.55)	224 (8.82)	176 (6.93)
	1FK7064-4C				252 (9.92)	205 (8.07)	288 (11.34)	240 (9.45)
80	1FK708.-4CC	118 (4.65)	119 (4.69)	21 (0.83)	243 (9.57)	197 (7.76)	295 (11.61)	250 (9.84)
	1FK708.-4CF		139 (5.47)					

© Siemens AG 2017

Dimensional drawings

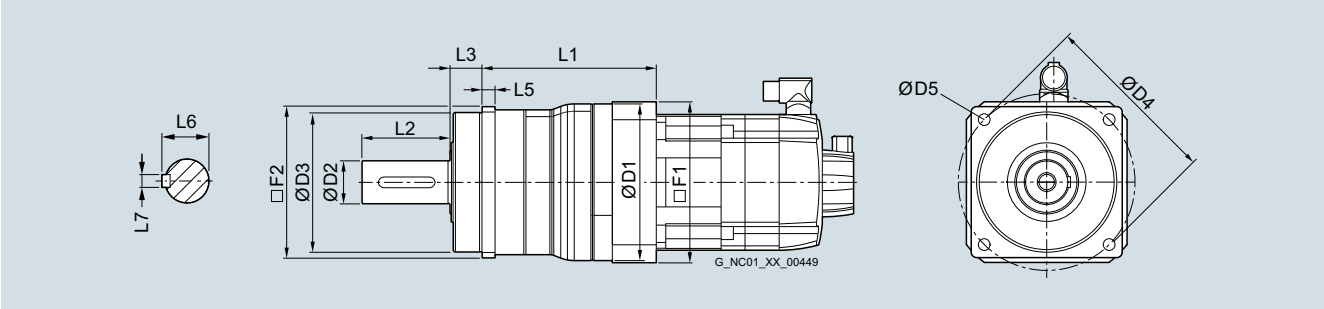

For SP+ series planetary gearboxes on SIMOTICS S-1FT7/S-1FK7 motors

Dimensions in mm (inches)

Planetary gearbox Type	D2	D3	D4	D5	F2	L2	L3	L5	L6	L7
SIMOTICS S-1FT7/1FK7 with SP+ series planetary gearbox single-stage/two-stage										
SP060S-MF1/-MF2	16 (0.63)	60 (2.36)	68 (2.68)	5.5 (0.22)	62 (2.48)	28 (1.10)	20 (0.79)	6 (0.24)	18 (0.71)	5 (0.20)
SP075S-MF1/-MF2	22 (0.87)	70 (2.76)	85 (3.35)	6.6 (0.26)	76 (2.99)	36 (1.42)	20 (0.79)	7 (0.28)	24.5 (0.96)	6 (0.24)
SP100S-MF1/-MF2	32 (1.26)	90 (3.54)	120 (4.72)	9 (0.35)	101 (3.98)	58 (2.28)	30 (1.18)	10 (0.39)	35 (1.38)	10 (0.39)
SP140S-MF1/-MF2	40 (1.57)	130 (5.12)	165 (6.50)	11 (0.43)	141 (5.55)	82 (3.23)	30 (1.18)	12 (0.47)	43 (1.69)	12 (0.47)
SP180S-MF1/-MF2	55 (2.17)	160 (6.30)	215 (8.46)	13.5 (0.53)	182 (7.17)	82 (3.23)	30 (1.18)	15 (0.59)	59 (2.32)	16 (0.63)
SP210S-MF1/-MF2	75 (2.95)	180 (7.09)	250 (9.84)	17 (0.67)	215 (8.46)	105 (4.13)	38 (1.50)	17 (0.67)	79.5 (3.13)	20 (0.79)
SP240S-MF1/-MF2	85 (3.35)	200 (7.87)	290 (11.42)	17 (0.67)	245 (9.65)	130 (5.12)	40 (1.57)	20 (0.79)	90 (3.54)	22 (0.87)

© Siemens AG 2017

Dimensional drawings

For SP+ series planetary gearboxes on SIMOTICS S-1FT7/S-1FK7 motors

Dimensions in mm (inches)

Planetary gearbox Type	Motor Type	Planetary gearbox series SP+ single-stage -MF1 D1	F1	L1	Planetary gearbox series SP+ two-stage -MF2 D1	F1	L1
SIMOTICS S-1FT7/1FK7 with SP+ series planetary gearbox single-stage/two-stage							
SP060S-	1FK702	68 (2.68)	70 (2.76)	89.3 (3.52)	70 (2.76)	60 (2.36)	108 (4.25)
	1FT703/1FK703	68 (2.68)	70 (2.76)	94 (3.70)	68 (2.68)	70 (2.76)	116 (4.57)
	1FT704/1FK704	91 (3.58)	90 (3.54)	106 (4.17)	–	–	–
SP075S-	1FK702	91 (3.58)	90 (3.54)	107.8 (4.24)	95 (3.74)	70 (2.76)	119 (4.69)
	1FT703/1FK703	91 (3.58)	90 (3.54)	107.8 (4.24)	95 (3.74)	70 (2.76)	123.4 (4.86)
	1FT704/1FK704	91 (3.58)	90 (3.54)	111.5 (4.39)	91 (3.58)	90 (3.54)	135.6 (5.34)
SP100S-	1FK702	–	–	–	118 (4.65)	90 (3.54)	142.3 (5.60)
	1FT703/1FK703	–	–	–	118 (4.65)	90 (3.54)	142.3 (5.60)
	1FT704/1FK704	115 (4.53)	120 (4.72)	122 (4.80)	118 (4.65)	90 (3.54)	146 (5.75)
	1FT704/1FK706	115 (4.53)	120 (4.72)	129 (5.08)	115 (4.53)	120 (4.72)	164 (6.46)
SP140S-	1FT704/1FK704	–	–	–	152 (5.98)	120 (4.72)	186.3 (7.33)
	1FT706/1FK706	146 (5.75)	150 (5.91)	162.3 (6.39)	152 (5.98)	120 (4.72)	193.3 (7.61)
	1FT708/1FK708	146 (5.75)	150 (5.91)	171.3 (6.74)	146 (5.75)	150 (5.91)	220 (8.66)
	1FT710/1FK710	146 (5.75)	190 (7.48)	171.3 (6.74)	–	–	–
SP180S-	1FT706/1FK706	–	–	–	212 (8.35)	150 (5.91)	234 (9.21)
	1FT708/1FK708	207 (8.15)	210 (8.27)	198 (7.80)	212 (8.35)	150 (5.91)	242.9 (9.56)
	1FT710/1FK710	207 (8.15)	210 (8.27)	203.5 (8.01)	212 (8.35)	190 (7.48)	242.9 (9.56)
SP210S-	1FT708/1FK708	–	–	–	215 (8.46)	210 (8.27)	272 (10.71)
	1FT710/1FK710	215 (8.46)	190 (7.48)	242 (9.53)	215 (8.46)	210 (8.27)	272 (10.71)
	1FT713	215 (8.46)	260 (7.48)	242 (9.53)	–	–	–
SP240S-	1FT708/1FK708	–	–	–	245 (9.65)	210 (8.27)	297.5 (11.71)
	1FT710/1FK710	245 (9.65)	240 (9.45)	273 (10.75)	245 (9.65)	210 (8.27)	297.5 (11.71)
	1FT713	245 (9.65)	260 (9.45)	273 (10.75)	245 (9.65)	260 (8.27)	297.5 (11.71)

© Siemens AG 2017

Dimensional drawings

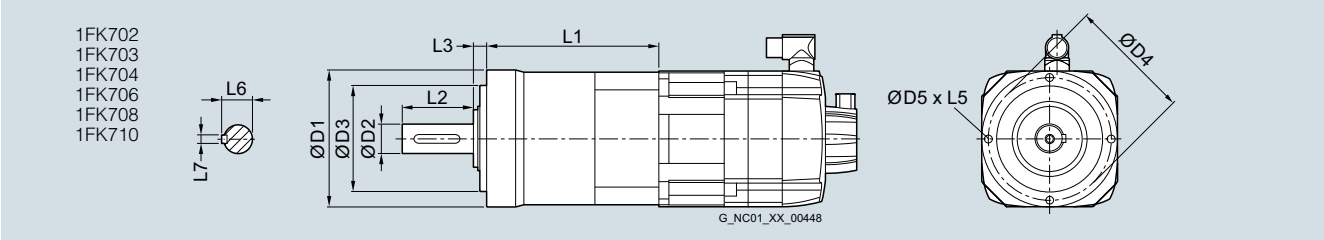

For LP+ series planetary gearboxes on SIMOTICS S-1FK7 motors

Planetary gearbox Type	Motor Type	Dimensions in mm (inches) L1	L2	L3	L5	L6	L7	D1	D2	D3	D4	D5
SIMOTICS S-1FK7 with LP+ series planetary gearbox												
LP050S-MF1	1FK702	63 (2.48)	18 (0.71)	6.5 (0.26)	8 (0.31)	13.5 (0.53)	4 (0.16)	50 (1.97)	12 (0.47)	35 (1.38)	44 (1.73)	M4
LP070S-MF1	1FK702	83 (3.27)	28 (1.10)	8 (0.31)	10 (0.39)	18 (0.71)	5 (0.20)	70 (2.76)	16 (0.63)	52 (2.05)	62 (2.44)	M5
	1FK703	90 (3.54)										
LP090S-MF1	1FK704	112 (4.41)	36 (1.42)	10 (0.39)	12 (0.47)	24.5 (0.96)	6 (0.24)	90 (3.54)	22 (0.87)	68 (2.68)	80 (3.15)	M6
	1FK706	122 (4.80)										
	1FK708	132 (5.20)										
LP120S-MF1	1FK706	140 (5.51)	58 (2.28)	12 (0.47)	16 (0.63)	35 (1.38)	10 (0.39)	120 (4.72)	32 (1.26)	90 (3.54)	108 (4.25)	M8
	1FK708	150 (5.91)										
LP155S-MF1	1FK708	168.5 (6.63)	82 (3.23)	15 (0.59)	20 (0.79)	43 (1.69)	12 (0.47)	155 (6.10)	40 (1.57)	120 (4.72)	140 (5.51)	M10
	1FK710	188.5 (7.42)										

© Siemens AG 2017

Notes

© Siemens AG 2017

9/2	**Overview**
9/4	**SIMOTICS M asynchronous and synchronous motors for SINAMICS S120**
9/4	SIMOTICS M-1PH8 main motors
	SIMOTICS M-1PH8 asynchronous motors
9/8	Forced ventilation, IP55 degree of protection
9/26	Forced ventilation, IP23 degree of protection
9/36	Water cooling, IP65 degree of protection
9/44	Water cooling, IP55 degree of protection
	SIMOTICS M-1PH8 synchronous motors
9/52	Forced ventilation, IP55 degree of protection
9/58	Water cooling, IP65 degree of protection
9/62	Water cooling, IP55 degree of protection
9/66	Article No. supplements
9/75	Options
9/79	Selection guides
9/79	Terminal boxes/Cable cross-sections
9/80	Ventilation data/Sound pressure levels
9/81	Cooling data/Sound pressure levels/ Water specifications
9/82	Radial force diagrams
9/86	Mounted holding brakes
9/87	**SIMOTICS M synchronous motors for SINAMICS S120**
9/90	SIMOTICS M-1FE1 synchronous built-in motors
9/98	SIMOTICS M-1FE2 synchronous built-in motors
9/100	VPM Voltage Protection Module
9/101	**Liquid cooling**
9/102	**Dimensional drawings**
9/102	SIMOTICS M-1PH8 asynchronous and synchronous motors
9/146	SIMOTICS M-1FE1 synchronous built-in motors
9/147	SIMOTICS M-1FE2 synchronous built-in motors
Chap. 8	**Technical information on three-phase motors**
Chap. 13	**Drive Technology Configurator** Product selection tool www.siemens.com/dt-configurator
Chap. 13	**SIZER for Siemens Drives** Engineering tool www.siemens.com/sizer
Chap. 13	**CAD CREATOR** Dimensional drawing and 2D/3D CAD generator www.siemens.com/cadcreator

© Siemens AG 2017

Motor type	Features	Degree of protection	Cooling method
SIMOTICS M-1PH8 asynchronous motor 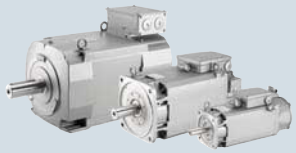	Three-phase squirrel-cage motor without housing Compact unit with high power density	IP55 IP23 IP55/IP65	Forced ventilation Forced ventilation Water cooling
SIMOTICS M-1PH8 synchronous motor 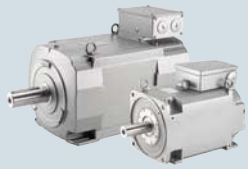	Permanent-magnet synchronous motor Outstanding performance capabilities Compact unit with extremely high power density	IP55 IP55/IP65	Forced ventilation Water cooling
SIMOTICS M-1FE1/1FE2 synchronous built-in motors	Synchronous built-in motors Permanent-magnet	IP00	Water cooling

SIMOTICS M main motors

The potential applications for SIMOTICS M-1PH8/M-1FE1/M-1FE2 motors are extremely versatile.

In machine tools, they are usually designated and used as main spindle motors.

In production machines, such as printing, packaging, and reforming machines, they are used as high-output main motors.

The selection and ordering data for the SINAMICS S120 Motor Modules are based on the booksize format by way of example. Blocksize and chassis formats are also possible. The SIZER for Siemens Drives engineering tool is available for detailed configuration

© Siemens AG 2017

Shaft height	Rated power P_{rated} for duty type S1 kW (hp)	Rated torque M_{rated}	Page
SH 80/SH 100/SH 132/SH 160/ SH 180/SH 225/SH 280	2.8 (3.75) – 385 (516)	13 ... 2475 Nm (9.59 ... 1825 lb_f-ft)	**9/8**
SH 180/SH 225/SH 280	24.5 (32.9) – 630 (845)	317 ... 3710 Nm (234 ... 2736 lb_f-ft)	**9/26**
SH 80/SH 100/SH 132/SH 160/ SH 180/SH 225/SH 280	3.5 (4.69) – 460 (617)	20 ... 2610 Nm (14.8 ... 1925 lb_f-ft)	**9/36**
SH 132/SH 160/SH 180/SH 225	15.7 (21.1) – 196 (263)	94 ... 1091 Nm (69.3 ... 805 lb_f-ft)	**9/52**
SH 132/SH 160/SH 180/SH 225	15 (20.1) – 310 (416)	107 ... 1650 Nm (78.9 ... 1217 lb_f-ft)	**9/58**
Outer diameter (cooling jacket)			
High Torque series 95/115/130/190/ 205/250/310	4 (5.36) – 104 (139)	4.5 ... 820 Nm (3.32 ... 605 lb_f-ft)	**9/90**
High Speed series 120/155/180/205/ 230/270	6.5 (8.72) – 94 (126)	5 ... 300 Nm (3.69 ... 221 lb_f-ft)	**9/94**
High Torque series 180	34 (45.6) – 159 (213)	640 ... 1530 Nm (472 ... 1128 lb_f-ft)	**9/98**

9

© Siemens AG 2017

Overview

SIMOTICS M-1PH8 motors, forced ventilation, shaft heights 80 to 160

The SIMOTICS M-1PH8 series is the latest motor generation for universal use with Motion Control applications. The wide power range is aimed at use as a central machine drive (as what is known as a "main motor") for various applications. The motors are available as an asynchronous variant as well as a compact synchronous variant with either forced ventilation or water cooling, based on a flexible building block principle. The flexible configuration – such as storage or electrical connection technology – allows you to adapt the motors to the requirements of almost any industrial application.

Main drive with 1PH8 = high power +
high dynamic response +
high accuracy

SIMOTICS M-1PH8 motors, water cooling, shaft heights 80 to 160

SIMOTICS M-1PH8 motors, water cooling, shaft heights 180 to 280

When developing the SIMOTICS M-1PH8 motor series, we placed special emphasis on making them perfectly compatible with the SINAMICS S120 drive system. For example, the specially harmonized power components, electronic rating plates, and the ability to integrate the motors via the DRIVE-CLiQ system interface ensure quick and easy commissioning as well as problem-free operation. What's more, thanks to the harmonization of the system, they are capable of handling extreme duty cycles, short rise times, and are exceptionally precise in terms of speed, torque, and positioning.

© Siemens AG 2017

Benefits

- Low space requirements thanks to high power density
- Performance capability thanks to wide rotational speed setting ranges
- High degree of structural flexibility due to the choice of
  - Asynchronous or synchronous design
  - Forced ventilation or water cooling
  - Mechanical designs
- Minimized maintenance costs thanks to high bearing service lives
- Precise motion control thanks to high rotational accuracy, even at the lowest speeds
- Maximum thermal utilization over the complete speed range
- Quiet operation as a result of low sound pressure level
- Optimized for the SINAMICS S120 drive system

Application

The application spectrum reaches across all industries and comprises, for example:

- Main drives in presses and extruders
- Converting applications
- Main spindle drives in machine tools
  (See Catalog NC 62)
- Rotary axes in the paper and printing industry
- Use in crane systems

The SIMOTICS M-1PH8 motors are suitable for installation in dry indoor areas without corrosive atmospheres.

Characteristic curves

SIMOTICS M-1PH8 asynchronous motor

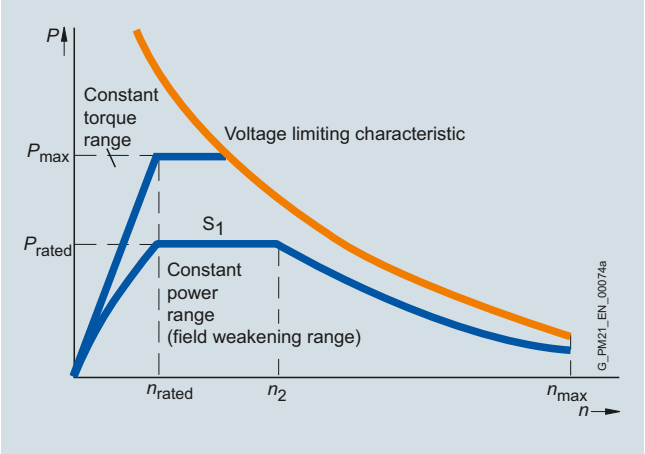

Typical speed/power characteristic curve for SIMOTICS M-1PH8 asynchronous motors

SIMOTICS M-1PH8 synchronous motor

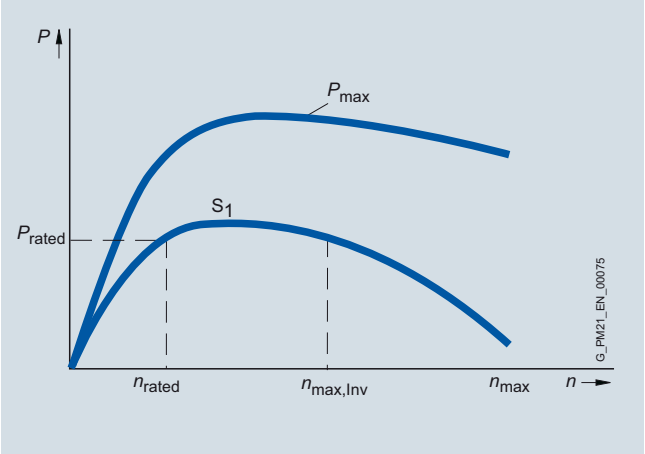

Typical speed/power characteristic curve for SIMOTICS M-1PH8 synchronous motors

The characteristic curves show the typical relationship between motor speed and drive power for SIMOTICS M-1PH8 motors for duty type S1 (continuous duty) in accordance with IEC 60034-1.

The detailed characteristic curves for the corresponding voltage and winding can be found in the SIMOTICS M-1PH8 Configuration Manual.

© Siemens AG 2017

Technical specifications

SIMOTICS M-1PH8 motor, forced ventilation	
Stator winding insulation in accordance with EN 60034-1 (IEC 60034-1)	For an ambient temperature of up to 40 °C (104 °F) Temperature class 180 (H)
Cooling according to EN 60034-6 (IEC 60034-6)	Forced ventilation
• 1PH808 ... 1PH822	Fan mounted axially at NDE
• 1PH828	Fan mounted radially at NDE
Temperature monitoring	Pt1000 temperature sensor in the stator winding 1PH818 ... 1PH828 additional Pt1000 as reserve
Fan supply voltage	
• 1PH808	230 V 1 AC 50/60 Hz, 265 V 1 AC 60 Hz
• 1PH810 ... 1PH816	400 V 3 AC 50/60 Hz, 480 V 3 AC 60 Hz
• 1PH818/1PH822	200 ... 277 V 1 AC 50/60 Hz (EC fan) 400 V 3 AC 50/60 Hz, 480 V 3 AC 60 Hz (optional)
• 1PH828	400 V 3 AC 50/60 Hz, 480 V 3 AC 60 Hz
Type of construction in accordance with EN 60034-7 (IEC 60034-7)	
• 1PH808	IM B3, IM B5
• 1PH810 ... 1PH828	IM B3, IM B5, IM B35
Degree of protection in accordance with EN 60034-5 (IEC 60034-5)	
• 1PH808 ... 1PH828	IP55 (forced ventilation)
• 1PH818 ... 1PH828	IP23 (open-circuit cooling)
Shaft extension on the drive end in accordance with DIN 748-3 (IEC 60034-5)	Plain shaft or feather key full-key or half-key balancing for feather key
Shaft and flange accuracy in accordance with DIN 42955 (IEC 60072-1) [1]	Without holding brake: Tolerance R (reduced) With holding brake: Tolerance N (normal)
Vibration severity	In accordance with Siemens/EN 60034-14 (IEC 60034-14) [1]
Sound pressure level L_{pA} (1 m) in accordance with DIN EN ISO 1680, max. Tolerance +3 dB	
Forced ventilation (IP55)	
• 1PH808 ... 1PH813	70 dB at a rated pulse frequency of 4 kHz and a speed range up to 5000 rpm
• 1PH816	73 dB at a rated pulse frequency of 4 kHz and a speed range up to 5000 rpm
• 1PH818	73 dB at a rated pulse frequency of 2 kHz and a speed range up to 5000 rpm
• 1PH822	73 dB at a rated pulse frequency of 2 kHz and a speed range up to 3500 rpm
• 1PH828	74 dB at a rated pulse frequency of 2 kHz and a speed range up to 3300 rpm
Forced ventilation (IP23)	
• 1PH818	73 dB at a rated pulse frequency of 2 kHz and a speed range up to 3000 rpm
• 1PH822	73 dB at a rated pulse frequency of 2 kHz and a speed range up to 2000 rpm
• 1PH828	74 dB at a rated pulse frequency of 2 kHz and a speed range up to 2800 rpm
Built-in encoder systems	Absolute and incremental encoder with or without DRIVE-CLiQ interface
Connection	Connector for signals or DRIVE-CLiQ interface (mating connector not included in the scope of supply)
Power	
• 1PH808 ... 1PH813	Power connector or terminal box
• 1PH816 ... 1PH828	Terminal box
Fan	
• 1PH808	Power connector
• 1PH810 ... 1PH813	Power connector or terminal box
• 1PH816 ... 1PH828	Terminal box
Encoder system	Connector for signals or DRIVE-CLiQ interface (mating connector not included in the scope of supply)
Rating plate	1 attached to motor 1 supplied separately with terminal box
Paint finish	Standard paint finish in anthracite RAL 7016
Certificate of suitability, according to	cURus, CE, EAC

[1] Shaft extension run-out, concentricity of centering ring and shaft, and perpendicularity of flange to shaft.

© Siemens AG 2017

Technical specifications (continued)

SIMOTICS M-1PH8 motor, water cooling	
Stator winding insulation in accordance with EN 60034-1 (IEC 60034-1)	For a coolant inlet temperature up to 30 °C (86 °F) Temperature class 180 (H) [2]
Cooling according to EN 60034-6 (IEC 60034-6)	Water cooling Max. cooling water pressure at inlet: 6 bar Connecting thread at NDE
Temperature monitoring	
• 1PH808 ... 1PH816	Pt1000 temperature sensor in the stator winding
• 1PH818 ... 1PH828	1 additional Pt1000 as reserve
Type of construction in accordance with EN 60034-7 (IEC 60034-7)	
• 1PH808	IM B3, IM B5
• 1PH810 ... 1PH828	IM B3, IM B5, IM B35
Degree of protection in accordance with EN 60034-5 (IEC 60034-5)	
• 1PH808 ... 1PH816	IP65
• 1PH818 ... 1PH828	IP55
Shaft extension on the drive end in accordance with DIN 748-3 (IEC 60072-1)	Plain shaft or feather key, full-key or half-key balancing for feather key
Shaft and flange accuracy in accordance with DIN 42955 (IEC 60072-1) [1]	Without holding brake: Tolerance R (reduced) With holding brake: Tolerance N (normal)
Vibration severity	in accordance with Siemens/EN 60034-14 (IEC 60034-14) [1]
Sound pressure level L_{pA} (1 m) in accordance with DIN EN ISO 1680, max. Tolerance +3 dB	
• 1PH808 ... 1PH813	68 dB at a rated pulse frequency of 4 kHz and a speed range up to 5000 rpm
• 1PH816	69 dB at a rated pulse frequency of 4 kHz and a speed range up to 5000 rpm
• 1PH818	70 dB at a rated pulse frequency of 2 or 4 kHz and a speed range up to 5000 rpm
• 1PH822	70 dB at a rated pulse frequency of 2 or 4 kHz and a speed range up to 4500 rpm
• 1PH828	72 dB at a rated pulse frequency of 2 kHz and a speed range up to 3300 rpm
Built-in encoder systems	Absolute and incremental encoder with or without DRIVE-CLiQ interface
Connection	Connector for signals or DRIVE-CLiQ interface (mating connector not included in the scope of supply)
Power	
• 1PH808 ... 1PH813	Power connector or terminal box
• 1PH816 ... 1PH828	Terminal box
Fan	
• 1PH808	Power connector
• 1PH810 ... 1PH813	Power connector or terminal box
• 1PH816 ... 1PH828	Terminal box
Encoder system	Connector for signals or DRIVE-CLiQ interface (mating connector not included in the scope of supply)
Rating plate	1 attached to motor 1 supplied separately with terminal box
Paint finish	Standard paint finish in anthracite RAL 7016
Certificate of suitability	cURus, CE, EAC

[1] Shaft extension run-out, concentricity of centering ring and shaft, and perpendicularity of flange to shaft.

[2] The following motors are designed to conform to temperature class 155 (F):
1PH8107-1.F2/1PH8107-1.M2
1PH8138-2.F2/1PH8138-2.G2
1PH8164/1PH8166/1PH8168

© Siemens AG 2017

Selection and ordering data

Rated speed	Shaft height	Rated power	Rated torque	Rated current	Rated voltage	Rated frequency	Operating speed during field weakening, max. [1]	Speed, max. [2]	SIMOTICS M-1PH8 asynchronous motors Forced ventilation
n_{rated}	SH	P_{rated}	M_{rated}	I_{rated}	U_{rated}	f_{rated}	n_2	n_{max}	
rpm		kW (hp)	Nm (lb_f-ft)	A	V	Hz	rpm	rpm	Article No.
Line voltage 400 V 3 AC, Smart/Basic Line Module									
400	100	2.5 (3.35)	60 (44.3)	8.8	290	15.5	1500	7000	**1PH8107-■■B■■-....**
	132	2.9 (3.89)	69 (50.9)	9	272	14.7	1500	6000	**1PH8131-■■B■■-....**
		5.2 (6.97)	124 (91.5)	15.5	309	15.0	1000	6000	**1PH8133-■■B■■-....**
		6.4 (8.58)	153 (113)	18	320	15.2	1000	6000	**1PH8135-■■B■■-....**
		6.9 (9.25)	165 (122)	18	323	14.7	1300	6000	**1PH8137-■■B■■-....**
	160	9.5 (12.7)	227 (167)	30	260	14.3	2150	6500	**1PH8163-■■B■■-....**
		13 (17.4)	310 (229)	36	300	14.1	1750	6500	**1PH8165-■■B■■-....**
	180	16.3 (21.9)	389 (287)	49	271	14.1	2800	5000	**1PH8184-■■B■■-....**
		21.2 (28.4)	506 (373)	65	268	13.9	3000	5000	**1PH8186-■■B■■-....**
	225	30.4 (40.8)	726 (535)	86	268	13.9	2400	4500	**1PH8224-■■B■■-....**
		39.2 (52.6)	936 (690)	112	264	13.9	2500	4500	**1PH8226-■■B■■-....**
		48 (64.4)	1146 (845)	132	272	13.8	2600	4500	**1PH8228-■■B■■-....**
	280	63 (84.5)	1504 (1109)	154	325	13.6	1100	3300	**1PH8284-1■B1■-....**
		80 (107)	1910 (1409)	186	325	13.6	1200	3300	**1PH8286-1■B1■-....**
		103 (138)	2459 (1814)	245	325	13.6	1300	3300	**1PH8288-1■B1■-....**
700	180	27 (36.2)	368 (271)	65	320	24.0	3300	5000	**1PH8184-■■C■■-....**
		35 (46.9)	478 (353)	83	330	23.9	3700	5000	**1PH8186-■■C■■-....**
	225	55 (73.8)	750 (553)	136	310	23.8	2900	4500	**1PH8224-■■C■■-....**
		68 (91.2)	928 (684)	162	310	23.8	3100	4500	**1PH8226-■■C■■-....**
		82 (110)	1119 (825)	188	315	23.8	3300	4500	**1PH8228-■■C■■-....**
	280	110 (148)	1501 (1107)	240	330	23.7	2100	3300	**1PH8284-1■C1■-....**
		138 (185)	1883 (1389)	295	325	23.7	2100	3300	**1PH8286-1■C1■-....**
		166 (223)	2265 (1671)	365	325	23.6	2100	3300	**1PH8288-1■C1■-....**
1000	100	3.7 (4.96)	35 (25.8)	10	333	35.8	2550	9000	**1PH8103-■■D■■-....**
		6.3 (8.45)	60 (44.3)	17.5	307	35.5	4300	9000	**1PH8107-■■D■■-....**
	132	7.9 (10.6)	75 (55.3)	20	316	34.8	3000	8000	**1PH8131-■■D■■-....**
		12 (16.1)	115 (84.8)	30	319	35.0	3000	8000	**1PH8133-■■D■■-....**
		17 (22.8)	162 (119)	43	307	34.8	4300	8000	**1PH8137-■■D■■-....**
	160	22 (29.5)	210 (155)	55	300	34.2	2800	6500	**1PH8163-■■D■■-....**
		28 (37.5)	267 (197)	71	292	34.2	4600	6500	**1PH8165-■■D■■-....**
	180	39 (52.3)	372 (274)	87	340	34.0	4200	5000	**1PH8184-■■D■■-....**
		51 (68.4)	487 (359)	112	340	34.0	4400	5000	**1PH8186-■■D■■-....**
	225	71 (95.2)	678 (500)	158	335	33.8	3300	4500	**1PH8224-■■D■■-....**
		92 (123)	879 (648)	194	340	33.8	3300	4500	**1PH8226-■■D■■-....**
		113 (152)	1079 (796)	235	340	33.9	3300	4500	**1PH8228-■■D■■-....**
	280	150 (201)	1433 (1057)	315	335	33.7	2100	3300	**1PH8284-1■D1■-....**
		182 (244)	1738 (1282)	410	330	33.6	2100	3300	**1PH8286-1■D1■-....**
		226 (303)	2158 (1592)	495	335	33.6	2100	3300	**1PH8288-1■D1■-....**

For versions, see Article No. supplements and options.

For footnotes, see next page.

© Siemens AG 2017

Motor type (repeated)	Power factor	Magne-tizing current	Efficiency	Moment of inertia without holding brake	Weight without hold-ing brake, approx.	Terminal box	SINAMICS S120 Motor Module: Rated output current [3]	SINAMICS S120 Motor Module: Internal air cooling For other components, see SINAMICS S120 drive system
	cos φ	I_μ	η	J			I_{rated}	
		A		kgm² (lbf-in-s²)	kg (lb)	Type	A	Article No.
1PH8107- . . B . . .	0.85	4.1	0.690	0.0289 (0.26)	73 (161)	gk813	9	**6SL3120-■TE21-0AD .**
1PH8131- . . B . . .	0.88	3.5	0.770	0.0590 (0.52)	89 (196)	gk833	9	**6SL3120-■TE21-0AD .**
1PH8133- . . B . . .	0.88	6.2	0.750	0.0760 (0.67)	106 (234)	gk833	18	**6SL3120-■TE21-8A■ .**
1PH8135- . . B . . .	0.90	5.2	0.740	0.0940 (0.83)	125 (276)	gk833	18	**6SL3120-■TE21-8A■ .**
1PH8137- . . B . . .	0.88	6.7	0.790	0.1090 (0.96)	141 (311)	gk833	18	**6SL3120-■TE21-8A■ .**
1PH8163- . . B . . .	0.91	8.1	0.823	0.2160 (1.91)	196 (432)	gk863	30	**6SL3120-1TE23-0A■ .**
1PH8165- . . B . . .	0.86	14.9	0.826	0.2320 (2.05)	230 (507)	gk863	45	**6SL3120-1TE24-5AA .**
1PH8184- . . B . . .	0.85	23	0.834	0.489 (4.33)	350 (772)	1XB7322-P05	60	**6SL3120-1TE26-0AA .**
1PH8186- . . B . . .	0.83	34	0.850	0.652 (5.77)	422 (930)	1XB7322-P05	85	**6SL3120-1TE28-5AA .**
1PH8224- . . B . . .	0.87	34	0.872	1.48 (13.1)	610 (1345)	1XB7322-P05	85 [4]	**6SL3120-1TE28-5AA .**
1PH8226- . . B . . .	0.87	46	0.887	1.93 (17.1)	740 (1631)	1XB7322-P05	132	**6SL3120-1TE31-3AA .**
1PH8228- . . B . . .	0.86	58	0.896	2.33 (20.6)	870 (1918)	1XB7322-P05	132	**6SL3120-1TE31-3AA .**
1PH8284-1. B . . .	0.79	86	0.924	4.20 (37.1)	1200 (2646)	1XB7700-P02	200	**6SL3120-1TE32-0AA .**
1PH8286-1. B . . .	0.82	98	0.928	5.20 (46.0)	1400 (3086)	1XB7700-P02	200	**6SL3120-1TE32-0AA .**
1PH8288-1. B . . .	0.80	136	0.931	6.30 (55.8)	1650 (3638)	1XB7700-P02	260	**6SL3120-1TE32-6AA .**
1PH8184- . . C . . .	0.84	30	0.889	0.49 (4.34)	350 (772)	1XB7322-P05	85	**6SL3120-1TE28-5AA .**
1PH8186- . . C . . .	0.81	44	0.909	0.652 (5.77)	422 (930)	1XB7322-P05	85	**6SL3120-1TE28-5AA .**
1PH8224- . . C . . .	0.82	67	0.925	1.48 (13.1)	610 (1345)	1XB7322-P05	132 [4]	**6SL3120-1TE31-3AA .**
1PH8226- . . C . . .	0.84	76	0.932	1.93 (17.1)	740 (1631)	1XB7322-P05	200	**6SL3120-1TE32-0AA .**
1PH8228- . . C . . .	0.86	80	0.933	2.33 (20.6)	870 (1918)	1XB7322-P05	200	**6SL3120-1TE32-0AA .**
1PH8284-1. C . . .	0.85	106	0.947	4.20 (37.2)	1200 (2646)	1XB7700-P02	260	**6SL3120-1TE32-6AA .**
1PH8286-1. C . . .	0.87	121	0.949	5.20 (46.0)	1400 (3086)	1XB7700-P02	310	**6SL3320-1TE33-1AA .**
1PH8288-1. C . . .	0.85	171	0.953	6.30 (55.8)	1650 (3638)	1XB7700-P02	380	**6SL3320-1TE33-8AA .**
1PH8103- . . D . . .	0.82	4.6	0.814	0.0172 (0.15)	51 (112)	gk813	18	**6SL3120-■TE21-8A■ .**
1PH8107- . . D . . .	0.82	8.2	0.834	0.0289 (0.26)	73 (161)	gk813	18	**6SL3120-■TE21-8A■ .**
1PH8131- . . D . . .	0.86	8.0	0.870	0.0590 (0.52)	89 (196)	gk833	30	**6SL3120-1TE23-0A■ .**
1PH8133- . . D . . .	0.88	10.1	0.871	0.0760 (0.67)	106 (234)	gk833	30	**6SL3120-1TE23-0A■ .**
1PH8137- . . D . . .	0.88	15.1	0.881	0.1090 (0.96)	141 (311)	gk833	45	**6SL3120-1TE24-5AA .**
1PH8163- . . D . . .	0.89	17.3	0.909	0.2160 (1.91)	196 (432)	gk863	60	**6SL3120-1TE26-0AA .**
1PH8165- . . D . . .	0.89	22.2	0.914	0.2320 (2.05)	230 (507)	gk863	85	**6SL3120-1TE28-5AA .**
1PH8184- . . D . . .	0.83	42	0.920	0.489 (4.33)	350 (772)	1XB7322-P05	85 [4]	**6SL3120-1TE28-5AA .**
1PH8186- . . D . . .	0.83	56	0.926	0.652 (5.77)	422 (930)	1XB7322-P05	132	**6SL3120-1TE31-3AA .**
1PH8224- . . D . . .	0.82	77	0.942	1.48 (13.1)	610 (1345)	1XB7322-P05	200	**6SL3120-1TE32-0AA .**
1PH8226- . . D . . .	0.85	86	0.944	1.93 (17.1)	740 (1631)	1XB7322-P05	200	**6SL3120-1TE32-0AA .**
1PH8228- . . D . . .	0.87	97	0.948	2.33 (20.6)	870 (1918)	1XB7422-P06	260	**6SL3120-1TE32-6AA .**
1PH8284-1. D . . .	0.85	143	0.958	4.20 (37.2)	1200 (2646)	1XB7700-P02	310 [4]	**6SL3320-1TE33-1AA .**
1PH8286-1. D . . .	0.81	215	0.960	5.20 (46)	1400 (3086)	1XB7700-P02	490	**6SL3320-1TE35-0AA .**
1PH8288-1. D . . .	0.82	252	0.962	6.30 (55.8)	1650 (3638)	1XB7700-P02	490 [4]	**6SL3320-1TE35-0AA .**

Single Motor Module	**1**
Double Motor Module	**2**
Motor Module for continuous load with 200 % overload (C-type)	**C**
for highly dynamic, intermittent load cycles with 300 % overload (D-type)	**D**
Version status	

[1] n_2: Maximum permissible thermal speed at constant power.

[2] n_{max}: Maximum speed that must not be exceeded (applicable to Standard: 14th digit of article number A to H); for performance bearing (14th digit = "L"), the increased maximum speeds apply; limitations must be taken into consideration where necessary (e.g. with holding brake), see Article No. supplements.

[3] I_{rated}: Output current of the Motor Module at rated pulse frequency (see SINAMICS S120 drive system).
The rated motor data is valid for 4 kHz (SH 80 to 160) or 2 kHz (SH 180 to 280).

[4] The output current of the Motor Module is lower than the rated motor current for the pulse frequency on which it is based.

© Siemens AG 2017

Selection and ordering data

Rated speed	Shaft height	Rated power	Rated torque	Rated current	Rated voltage	Rated frequency	Operating speed during field weakening, max. [1]	Speed, max. [2]	SIMOTICS M-1PH8 asynchronous motors Forced ventilation
n_{rated}	SH	P_{rated}	M_{rated}	I_{rated}	U_{rated}	f_{rated}	n_2	n_{max}	
rpm		kW (hp)	Nm (lb_f-ft)	A	V	Hz	rpm	rpm	Article No.
Line voltage 400 V 3 AC, Smart/Basic Line Module (continued)									
1500	80	2.8 (3.75)	18 (13.3)	7.5	346	53.3	4700	10000	**1PH8083-■■F■■-....**
		3.7 (4.96)	24 (17.7)	10	336	53.2	5200	10000	**1PH8087-■■F■■-....**
	100	3.7 (4.96)	24 (17.7)	12.5	265	52.4	5000	9000	**1PH8101-■■F■■-....**
		5.5 (7.38)	35 (28.5)	13.5	368	52.4	4200	9000	**1PH8103-■■F■■-....**
		7 (9.39)	45 (33.2)	17.5	348	51.9	5250	9000	**1PH8105-■■F■■-....**
		9 (12.1)	57 (42.0)	23.5	330	52.2	4500	9000	**1PH8107-■■F■■-....**
	132	11 (14.8)	70 (51.6)	24	360	51.4	4800	8000	**1PH8131-■■F■■-....**
		15 (20.1)	96 (70.8)	34	342	51.3	5500	8000	**1PH8133-■■F■■-....**
		18.5 (24.8)	118 (87.0)	43	330	51.3	6150	8000	**1PH8135-■■F■■-....**
		22 (29.5)	140 (103)	56	308	51.3	4300	8000	**1PH8137-■■F■■-....**
	160	30 (40.2)	191 (141)	71	319	50.8	3500	6500	**1PH8163-■■F■■-....**
		37 (49.6)	236 (174)	78	350	50.8	2800	6500	**1PH8165-■■F■■-....**
	180	51 (68.4)	325 (240)	116	335	50.6	5000	5000	**1PH8184-■■F■■-....**
		74 (99.2)	471 (347)	166	330	50.6	5000	5000	**1PH8186-■■F■■-....**
	225	95 (127)	605 (446)	200	340	50.5	3300	4500	**1PH8224-■■F■■-....**
		130 (174)	828 (611)	270	340	50.5	3300	4500	**1PH8226-■■F■■-....**
		160 (215)	1019 (752)	340	340	50.4	3300	4500	**1PH8228-■■F■■-....**
	280	196 (263)	1248 (920)	390	345	50.4	1900	3300	**1PH8284-1■F1■-....**
		250 (335)	1592 (1174)	490	345	50.4	2000	3300	**1PH8286-1■F1■-....**
		320 (429)	2037 (1502)	620	345	50.4	2100	3300	**1PH8288-1■F1■-....**
2000	80	3.7 (4.96)	18 (13.3)	11.6	293	70.2	9200	10000	**1PH8083-■■G■■-....**
		4.9 (6.57)	23 (17.0)	14.1	320	69.8	8400	10000	**1PH8087-■■G■■-....**
	100	7 (9.39)	33 (24.3)	17.5	345	69.0	6000	9000	**1PH8103-■■G■■-....**
		10.5 (14.1)	50 (36.9)	26	355	68.6	4000	9000	**1PH8107-■■G■■-....**
	132	20 (26.8)	96 (70.8)	45	350	68.1	4000	8000	**1PH8133-■■G■■-....**
		21.5 (28.8)	103 (76.0)	51	323	68.0	4000	8000	**1PH8135-■■G■■-....**
		28 (37.5)	134 (98.8)	60	350	68.1	4000	8000	**1PH8137-■■G■■-....**
	160	36 (48.3)	172 (127)	83	324	67.5	3000	6500	**1PH8163-■■G■■-....**
		41 (55.0)	196 (145)	88	350	67.4	2750	6500	**1PH8165-■■G■■-....**
2500	180	78 (105)	298 (220)	166	340	84.0	5000	5000	**1PH8184-■■L■■-....**
		106 (142)	405 (299)	230	335	83.9	5000	5000	**1PH8186-■■L■■-....**
	225	142 (190)	542 (400)	295	340	83.9	3200	4500	**1PH8224-■■L■■-....**
		168 (225)	642 (474)	350	335	83.8	3200	4500	**1PH8226-■■L■■-....**
		205 (275)	783 (578)	420	340	83.8	3200	4500	**1PH8228-■■L■■-....**
3000	80	4.1 (5.50)	13 (9.59)	13.6	298	102.6	10000	10000	**1PH8083-■■M■■-....**
		4.8 (6.44)	15 (11.1)	17.3	284	102.2	10000	10000	**1PH8087-■■M■■-....**
	100	8.4 (11.3)	27 (19.9)	25.7	297	102.1	14250	9000	**1PH8103-■■M■■-....**
		12 (16.1)	38 (28.0)	38	294	101.6	16500	9000	**1PH8107-■■M■■-....**

For versions, see Article No. supplements and options.

For footnotes, see next page.

© Siemens AG 2017

Motor type (repeated)	Power factor	Magnetizing current	Efficiency	Moment of inertia without holding brake	Weight without holding brake, approx.	Terminal box	SINAMICS S120 Motor Module: Rated output current [3]	SINAMICS S120 Motor Module: Internal air cooling For other components, see SINAMICS S120 drive system
	cos φ	I_μ	η	J			I_{rated}	
		A		kgm² (lb$_f$-in-s²)	kg (lb)	Type	A	Article No.
1PH8083- . . F . . .	0.80	3.8	0.809	0.0064 (0.06)	32 (70.5)	gk803	9	**6SL3120-■TE21-0AD .**
1PH8087- . . F . . .	0.81	4.9	0.817	0.0089 (0.08)	39 (86.0)	gk803	18	**6SL3120-■TE21-8A■ .**
1PH8101- . . F . . .	0.80	6.0	0.835	0.0138 (0.12)	42 (92.6)	gk813	18	**6SL3120-■TE21-8A■ .**
1PH8103- . . F . . .	0.80	6.5	0.852	0.0172 (0.15)	51 (112)	gk813	18	**6SL3120-■TE21-8A■ .**
1PH8105- . . F . . .	0.79	8.8	0.867	0.0252 (0.22)	65 (143)	gk813	18	**6SL3120-■TE21-8A■ .**
1PH8107- . . F . . .	0.81	10.8	0.869	0.0289 (0.26)	73 (161)	gk813	30	**6SL3120-1TE23-0A■ .**
1PH8131- . . F . . .	0.84	10.4	0.899	0.0590 (0.52)	89 (196)	gk833	30	**6SL3120-1TE23-0A■ .**
1PH8133- . . F . . .	0.85	14.2	0.899	0.0760 (0.67)	106 (234)	gk833	45	**6SL3120-1TE24-5AA .**
1PH8135- . . F . . .	0.85	18.1	0.898	0.0940 (0.83)	125 (276)	gk833	45	**6SL3120-1TE24-5AA .**
1PH8137- . . F . . .	0.84	24.2	0.904	0.1090 (0.96)	141 (311)	gk833	60	**6SL3120-1TE26-0AA .**
1PH8163- . . F . . .	0.87	25.6	0.923	0.2160 (1.91)	196 (432)	gk863	85	**6SL3120-1TE28-5AA .**
1PH8165- . . F . . .	0.88	27.0	0.926	0.2320 (2.05)	230 (507)	gk863	85	**6SL3120-1TE28-5AA .**
1PH8184- . . F . . .	0.80	63	0.940	0.489 (4.33)	350 (772)	1XB7322-P05	132	**6SL3120-1TE31-3AA .**
1PH8186- . . F . . .	0.83	82	0.945	0.652 (5.77)	422 (930)	1XB7322-P05	200	**6SL3120-1TE32-0AA .**
1PH8224- . . F . . .	0.85	87	0.953	1.48 (13.1)	610 (1345)	1XB7322-P05	200	**6SL3120-1TE32-0AA .**
1PH8226- . . F . . .	0.85	119	0.957	1.93 (17.1)	740 (1631)	1XB7422-P06	310	**6SL3320-1TE33-1AA .**
1PH8228- . . F . . .	0.83	170	0.959	2.33 (20.6)	870 (1918)	1XB7700-P02	380	**6SL3320-1TE33-8AA .**
1PH8284-1. F . . .	0.87	162	0.963	4.20 (37.2)	1200 (2646)	1XB7700-P02	490	**6SL3320-1TE35-0AA .**
1PH8286-1. F . . .	0.89	182	0.965	5.20 (46.0)	1400 (3086)	1XB7700-P02	490	**6SL3320-1TE35-0AA .**
1PH8288-1. F . . .	0.89	233	0.966	6.30 (55.8)	1650 (3638)	1XB7712-P03	745	**6SL3320-1TE37-5AA .**
1PH8083- . . G . . .	0.79	5.7	0.832	0.0064 (0.06)	32 (70.5)	gk803	18	**6SL3120-■TE21-8A■ .**
1PH8087- . . G . . .	0.78	7.3	0.853	0.0089 (0.08)	39 (86.0)	gk803	18	**6SL3120-■TE21-8A■ .**
1PH8103- . . G . . .	0.79	8.7	0.877	0.0172 (0.15)	51 (112)	gk813	18	**6SL3120-■TE21-8A■ .**
1PH8107- . . G . . .	0.78	12.9	0.897	0.0289 (0.26)	73 (161)	gk813	30	**6SL3120-1TE23-0A■ .**
1PH8133- . . G . . .	0.85	18.1	0.919	0.0760 (0.67)	106 (234)	gk833	45	**6SL3120-1TE24-5AA .**
1PH8135- G	0.85	20.9	0.912	0.0940 (0.83)	125 (276)	gk833	60	**6SL3120-1TE26-0AA .**
1PH8137- . . G . . .	0.87	21.5	0.924	0.1090 (0.96)	141 (311)	gk833	60	**6SL3120-1TE26-0AA .**
1PH8163- . . G . . .	0.88	28.1	0.929	0.2160 (1.91)	196 (432)	gk863	85	**6SL3120-1TE28-5AA .**
1PH8165- . . G . . .	0.87	32.4	0.927	0.2320 (2.05)	230 (507)	gk863	85 [4]	**6SL3120-1TE28-5AA .**
1PH8184- . . L . . .	0.84	75	0.952	0.489 (4.33)	350 (772)	1XB7322-P05	200	**6SL3120-1TE32-0AA .**
1PH8186- . . L . . .	0.84	107	0.955	0.652 (5.77)	422 (930)	1XB7422-P06	260	**6SL3120-1TE32-6AA .**
1PH8224- . . L . . .	0.86	113	0.958	1.48 (13.1)	610 (1345)	1XB7700-P02	310	**6SL3320-1TE33-1AA .**
1PH8226- . . L . . .	0.86	151	0.961	1.93 (17.1)	740 (1631)	1XB7700-P02	380	**6SL3320-1TE33-8AA .**
1PH8228- . . L . . .	0.86	181	0.963	2.33 (20.6)	870 (1918)	1XB7700-P02	490	**6SL3320-1TE35-0AA .**
1PH8083- . . M . . .	0.74	7.3	0.869	0.0064 (0.06)	32 (70.5)	gk803	18	**6SL3120-■TE21-8A■ .**
1PH8087- . . M . . .	0.72	9.6	0.871	0.0089 (0.08)	39 (86.0)	gk803	18	**6SL3120-■TE21-8A■ .**
1PH8103- . . M . . .	0.78	12.2	0.900	0.0172 (0.15)	51 (112)	gk813	30	**6SL3120-1TE23-0A■ .**
1PH8107- . . M . . .	0.76	19.2	0.900	0.0289 (0.26)	73 (161)	gk813	45	**6SL3120-1TE24-5AA .**

Single Motor Module	**1**
Double Motor Module	**2**
Motor Module	
for continuous load with 200 % overload (C-type)	**C**
for highly dynamic, intermittent load cycles with 300 % overload (D-type)	**D**
Version status	

[1] n_2: Maximum permissible thermal speed at constant power.

[2] n_{max}: Maximum speed that must not be exceeded (applicable to Standard: 14th digit of article number A to H); for performance bearing (14th digit = "L"), the increased maximum speeds apply; limitations must be taken into consideration where necessary (e.g. with holding brake), see Article No. supplements.

[3] I_{rated}: Output current of the Motor Module at rated pulse frequency (see SINAMICS S120 drive system).
The rated motor data is valid for 4 kHz (SH 80 to 160) or 2 kHz (SH 180 to 280).

[4] The output current of the Motor Module is lower than the rated motor current for the pulse frequency on which it is based.

© Siemens AG 2017

Selection and ordering data

Rated speed	Shaft height	Rated power	Rated torque	Rated current	Rated voltage	Rated frequency	Operating speed during field weakening, max. [1]	Speed, max. [2]	SIMOTICS M-1PH8 asynchronous motors Forced ventilation
n_{rated}	SH	P_{rated}	M_{rated}	I_{rated}	U_{rated}	f_{rated}	n_2	n_{max}	
rpm		kW (hp)	Nm (lb_f-ft)	A	V	Hz	rpm	rpm	Article No.
Line voltage 400 V 3 AC, Active Line Module									
500	100	3.2 (4.29)	61 (45.0)	8.8	345	18.8	1500	7000	**1PH8107-■■B■■-....**
	132	3.6 (4.83)	69 (50.9)	9	328	18.0	1500	6000	**1PH8131-■■B■■-....**
		6.5 (8.72)	124 (91.5)	15.5	363	18.5	1200	6000	**1PH8133-■■B■■-....**
		8 (10.7)	153 (113)	18	380	18.5	1000	6000	**1PH8135-■■B■■-....**
		8.6 (11.5)	165 (122)	18	391	17.8	1400	6000	**1PH8137-■■B■■-....**
	160	12 (16.1)	229 (169)	30	325	17.6	2200	6500	**1PH8163-■■B■■-....**
		16 (21.5)	306 (226)	36	365	17.5	1850	6500	**1PH8165-■■B■■-....**
	180	20.5 (27.5)	392 (289)	49	335	17.4	2900	5000	**1PH8184-■■B■■-....**
		26.5 (35.5)	506 (373)	65	335	17.2	3100	5000	**1PH8186-■■B■■-....**
	225	38 (51.0)	726 (535)	85	335	17.2	2500	4500	**1PH8224-■■B■■-....**
		49 (65.7)	936 (690)	110	330	17.2	2600	4500	**1PH8226-■■B■■-....**
		60 (80.5)	1146 (845)	132	340	17.2	2700	4500	**1PH8228-■■B■■-....**
	280	80 (107)	1529 (1128)	154	395	17.0	1600	3300	**1PH8284-1■B1■-....**
		100 (134)	1909 (1408)	188	400	17.0	1600	3300	**1PH8286-1■B1■-....**
		130 (174)	2481 (1830)	245	395	17.0	1600	3300	**1PH8288-1■B1■-....**
800	180	31 (41.6)	370 (273)	65	365	27.4	3800	5000	**1PH8184-■■C■■-....**
		40 (53.6)	478 (353)	83	360	27.3	4100	5000	**1PH8186-■■C■■-....**
	225	57 (76.4)	681 (502)	126	350	27.1	3400	4500	**1PH8224-■■C■■-....**
		73 (97.9)	872 (643)	154	350	27.1	3600	4500	**1PH8226-■■C■■-....**
		92 (123)	1098 (810)	182	360	27.2	3800	4500	**1PH8228-■■C■■-....**
	280	125 (168)	1492 (1100)	235	400	27.0	2300	3300	**1PH8284-1■C1■-....**
		155 (208)	1850 (1364)	285	385	27.0	2300	3300	**1PH8286-1■C1■-....**
		190 (255)	2268 (1673)	365	370	27.0	2300	3300	**1PH8288-1■C1■-....**
1150	100	4.3 (5.77)	36 (26.6)	10	380	40.7	2450	9000	**1PH8103-■■D■■-....**
		7.2 (9.66)	60 (44.3)	17.5	348	40.6	4750	9000	**1PH8107-■■D■■-....**
	132	9 (12.1)	75 (55.3)	20	360	39.8	3000	8000	**1PH8131-■■D■■-....**
		13.5 (18.1)	112 (82.6)	29	361	40.0	3000	8000	**1PH8133-■■D■■-....**
		19.5 (26.1)	162 (119)	43	350	39.8	4000	8000	**1PH8137-■■D■■-....**
	160	25 (33.5)	208 (153)	55	343	39.2	3550	6500	**1PH8163-■■D■■-....**
		208 (279)	257 (190)	69	333	39.2	4850	6500	**1PH8165-■■D■■-....**
	180	44 (59.0)	365 (269)	86	390	39.0	4800	5000	**1PH8184-■■D■■-....**
		58 (77.8)	482 (356)	112	390	38.9	5000	5000	**1PH8186-■■D■■-....**
	225	81 (109)	673 (496)	156	385	38.8	3400	4500	**1PH8224-■■D■■-....**
		105 (141)	872 (643)	192	390	38.8	3400	4500	**1PH8226-■■D■■-....**
		129 (173)	1071 (790)	235	390	38.8	3400	4500	**1PH8228-■■D■■-....**
	280	170 (228)	1414 (1043)	310	400	38.6	2200	3300	**1PH8284-1■D1■-....**
		210 (282)	1745 (1287)	410	380	38.6	2200	3300	**1PH8286-1■D1■-....**
		260 (349)	2160 (1593)	495	385	38.6	2200	3300	**1PH8288-1■D1■-....**

For versions, see Article No. supplements and options.

For footnotes, see next page.

© Siemens AG 2017

Motor type (repeated)	Power factor	Magne-tizing current	Efficiency	Moment of inertia without holding brake	Weight without hold-ing brake, approx.	Terminal box	SINAMICS S120 Motor Module: Rated output current [3]	SINAMICS S120 Motor Module: Internal air cooling For further components, see SINAMICS S120 drive system
	cos φ	I_μ	η	J			I_{rated}	
		A		kgm² (lbf-in-s²)	kg (lb)	Type	A	Article No.
1PH8107- . . B . . .	0.83	4.3	0.730	0.0289 (0.26)	73 (161)	gk813	9	**6SL3120-■TE21-0AD .**
1PH8131- . . B . . .	0.88	3.5	0.810	0.0590 (0.52)	89 (196)	gk833	9	**6SL3120-■TE21-0AD .**
1PH8133- . . B . . .	0.89	5.4	0.780	0.0760 (0.67)	106 (234)	gk833	18	**6SL3120-■TE21-8A■ .**
1PH8135- . . B . . .	0.90	5.6	0.780	0.0940 (0.83)	125 (276)	gk833	18	**6SL3120-■TE21-8A■ .**
1PH8137- . . B . . .	0.88	6.7	0.820	0.1090 (0.96)	141 (311)	gk833	18	**6SL3120-■TE21-8A■ .**
1PH8163- . . B . . .	0.90	8.9	0.819	0.2160 (1.91)	196 (432)	gk863	30	**6SL3120-1TE23-0A■ .**
1PH8165- . . B . . .	0.85	14.8	0.830	0.2320 (2.05)	230 (507)	gk863	45	**6SL3120-1TE24-5AA .**
1PH8184- . . B . . .	0.84	23	0.861	0.489 (4.33)	350 (772)	1XB7322-P05	60	**6SL3120-1TE26-0AA .**
1PH8186- . . B . . .	0.80	36	0.875	0.652 (5.77)	422 (930)	1XB7322-P05	85	**6SL3120-1TE28-5AA .**
1PH8224- . . B . . .	0.86	36	0.896	1.48 (13.1)	610 (1345)	1XB7322-P05	85	**6SL3120-1TE28-5AA .**
1PH8226- . . B . . .	0.86	48	0.908	1.93 (17.1)	740 (1631)	1XB7322-P05	132	**6SL3120-1TE31-3AA .**
1PH8228- . . B . . .	0.85	59	0.914	2.33 (20.6)	870 (1918)	1XB7322-P05	132	**6SL3120-1TE31-3AA .**
1PH8284-1. B . . .	0.81	81	0.935	4.20 (37.2)	1200 (2646)	1XB7700-P02	200	**6SL3120-1TE32-0AA .**
1PH8286-1. B . . .	0.82	96	0.939	5.20 (46.0)	1400 (3086)	1XB7700-P02	200	**6SL3120-1TE32-0AA .**
1PH8288-1. B . . .	0.82	127	0.941	6.30 (55.8)	1650 (3638)	1XB7700-P02	260	**6SL3120-1TE32-6AA .**
1PH8184- . . C . . .	0.84	30	0.901	0.489 (4.33)	350 (772)	1XB7322-P05	85	**6SL3120-1TE28-5AA .**
1PH8186- . . C . . .	0.84	41	0.916	0.652 (5.77)	422 (930)	1XB7322-P05	85	**6SL3120-1TE28-5AA .**
1PH8224- . . C . . .	0.80	67	0.934	1.48 (13.1)	610 (1345)	1XB7322-P05	132	**6SL3120-1TE31-3AA .**
1PH8226- . . C . . .	0.83	75	0.940	1.93 (17.1)	740 (1631)	1XB7322-P05	200	**6SL3120-1TE32-0AA .**
1PH8228- . . C . . .	0.86	80	0.941	2.33 (20.6)	870 (1918)	1XB7322-P05	200	**6SL3120-1TE32-0AA .**
1PH8284-1. C . . .	0.81	124	0.952	4.20 (37.2)	1200 (2646)	1XB7700-P02	260	**6SL3120-1TE32-6AA .**
1PH8286-1. C . . .	0.85	133	0.955	5.20 (46.0)	1400 (3086)	1XB7700-P02	310	**6SL3320-1TE33-1AA .**
1PH8288-1. C . . .	0.85	171	0.957	6.30 (55.8)	1650 (3638)	1XB7700-P02	380	**6SL3320-1TE33-8AA .**
1PH8103- . . D . . .	0.81	4.8	0.824	0.0172 (0.15)	51 (112)	gk813	18	**6SL3120-■TE21-8A■ .**
1PH8107- . . D . . .	0.82	8.2	0.852	0.0289 (0.26)	73 (161)	gk813	18	**6SL3120-■TE21-8A■ .**
1PH8131- . . D . . .	0.85	8.0	0.880	0.0590 (0.52)	89 (196)	gk833	30	**6SL3120-1TE23-0A■ .**
1PH8133- . . D . . .	0.87	10.7	0.884	0.0760 (0.67)	106 (234)	gk833	30	**6SL3120-1TE23-0A■ .**
1PH8137- . . D . . .	0.87	16.1	0.891	0.1090 (0.96)	141 (311)	gk833	45	**6SL3120-1TE24-5AA .**
1PH8163- . . D . . .	0.88	17.5	0.915	0.2160 (1.91)	196 (432)	gk863	60	**6SL3120-1TE26-0AA .**
1PH8165- . . D . . .	0.89	20.9	0.921	0.2320 (2.05)	230 (507)	gk863	85	**6SL3120-1TE28-5AA .**
1PH8184- . . D . . .	0.82	42	0.928	0.489 (4.33)	350 (772)	1XB7322-P05	85 [4]	**6SL3120-1TE28-5AA .**
1PH8186- . . D . . .	0.82	57	0.933	0.652 (5.77)	422 (930)	1XB7322-P05	132	**6SL3120-1TE31-3AA .**
1PH8224- . . D . . .	0.82	78	0.946	1.48 (13.1)	610 (1345)	1XB7322-P05	200	**6SL3120-1TE32-0AA .**
1PH8226- . . D . . .	0.85	86	0.949	1.93 (17.1)	740 (1631)	1XB7322-P05	200	**6SL3120-1TE32-0AA .**
1PH8228- . . D . . .	0.86	97	0.953	2.33 (20.6)	870 (1918)	1XB7422-P06	260	**6SL3120-1TE32-6AA .**
1PH8284-1. D . . .	0.82	157	0.960	4.20 (37.2)	1200 (2646)	1XB7700-P02	310	**6SL3320-1TE33-1AA .**
1PH8286-1. D . . .	0.81	217	0.962	5.20 (46.0)	1400 (3086)	1XB7700-P02	490	**6SL3320-1TE35-0AA .**
1PH8288-1. D . . .	0.82	253	0.964	6.30 (55.8)	1650 (3638)	1XB7700-P02	490 [4]	**6SL3320-1TE35-0AA .**

Single Motor Module	**1**
Double Motor Module	**2**
Motor Module	
for continuous load with 200 % overload (C-type)	**C**
for highly dynamic, intermittent load cycles with 300 % overload (D-type)	**D**
Version status	

[1] n_2: Maximum permissible thermal speed at constant power.

[2] n_{max}: Maximum speed that must not be exceeded (applicable to Standard: 14th digit of article number A to H); for performance bearing (14th digit = "L"), the increased maximum speeds apply; limitations must be taken into consideration where necessary (e.g. with holding brake), see Article No. supplements.

[3] I_{rated}: Output current of the Motor Module at rated pulse frequency (see SINAMICS S120 drive system).
The rated motor data is valid for 4 kHz (SH 80 to 160) or 2 kHz (SH 180 to 280).

[4] The output current of the Motor Module is lower than the rated motor current for the pulse frequency on which it is based.

© Siemens AG 2017

Selection and ordering data

Rated speed	Shaft height	Rated power	Rated torque	Rated current	Rated voltage	Rated frequency	Operating speed during field weakening, max. [1]	Speed, max. [2]	SIMOTICS M-1PH8 asynchronous motors Forced ventilation
n_{rated}	SH	P_{rated}	M_{rated}	I_{rated}	U_{rated}	f_{rated}	n_2	n_{max}	
rpm		kW (hp)	Nm (lb_f-ft)	A	V	Hz	rpm	rpm	Article No.
Line voltage 3 AC 400 V, Active Line Module (continued)									
1750	80	3.3 (4.43)	18 (13.3)	7.5	398	61.7	5200	10000	**1PH8083-■■F■■-....**
		4.3 (5.77)	23 (17.0)	10	396	61.3	5850	10000	**1PH8087-■■F■■-....**
	100	4.3 (5.77)	23 (17.0)	12.5	304	60.8	5000	9000	**1PH8101-■■F■■-....**
		6.3 (8.45)	34 (25.1)	13.1	412	60.8	4000	9000	**1PH8103-■■F■■-....**
		8 (10.7)	44 (32.5)	17.5	400	60.2	5900	9000	**1PH8105-■■F■■-....**
		10 (13.4)	55 (40.6)	22	380	60.4	5000	9000	**1PH8107-■■F■■-....**
	132	13 (17.4)	71 (52.4)	24	416	59.8	5150	8000	**1PH8131-■■F■■-....**
		17.5 (23.5)	96 (70.8)	34	392	59.7	5000	8000	**1PH8133-■■F■■-....**
		21.5 (28.8)	117 (86.3)	43	383	59.6	5500	8000	**1PH8135-■■F■■-....**
		25 (33.5)	136 (100)	56	353	59.6	5000	8000	**1PH8137-■■F■■-....**
	160	34 (45.6)	186 (137)	70	366	59.2	3050	6500	**1PH8163-■■F■■-....**
		41 (55.0)	224 (165)	76	400	59.1	2650	6500	**1PH8165-■■F■■-....**
	180	60 (80.5)	327 (241)	120	390	58.9	5000	5000	**1PH8184-■■F■■-....**
		85 (114)	464 (342)	164	385	58.9	5000	5000	**1PH8186-■■F■■-....**
	225	110 (148)	600 (443)	198	395	58.9	3200	4500	**1PH8224-■■F■■-....**
		135 (181)	737 (544)	250	395	58.8	3300	4500	**1PH8226-■■F■■-....**
		179 (240)	977 (721)	330	395	58.7	3400	4500	**1PH8228-■■F■■-....**
	280	225 (302)	1228 (906)	390	400	58.7	2200	3300	**1PH8284-1■F1■-....**
		270 (362)	1474 (1087)	460	400	58.7	2200	3300	**1PH8286-1■F1■-....**
		340 (456)	1856 (1369)	580	400	58.7	2200	3300	**1PH8288-1■F1■-....**
2300	80	4.1 (5.50)	17 (12.5)	11.3	332	80.0	10000	10000	**1PH8083-■■G■■-....**
		5.4 (7.24)	22 (16.2)	13.7	353	79.8	9650	10000	**1PH8087-■■G■■-....**
	100	7.5 (10.1)	31 (22.9)	17	382	78.9	6000	9000	**1PH8103-■■G■■-....**
		12.0 (16.1)	50 (36.9)	26	406	78.6	4600	9000	**1PH8107-■■G■■-....**
	132	22.5 (30.2)	93 (68.6)	44	400	78.1	5000	8000	**1PH8133-■■G■■-....**
		24 (32.2)	100 (73.8)	50	370	77.9	5000	8000	**1PH8135-■■G■■-....**
		29 (38.9)	120 (88.5)	56	400	77.9	5000	8000	**1PH8137-■■G■■-....**
	160	38 (51.0)	158 (117)	78	370	77.4	3200	6500	**1PH8163-■■G■■-....**
		44 (59.0)	183 (135)	85	394	77.4	3000	6500	**1PH8165-■■G■■-....**
2900	180	81 (109)	267 (197)	152	395	97.3	5000	5000	**1PH8184-■■L■■-....**
		101 (135)	333 (246)	198	385	97.2	5000	5000	**1PH8186-■■L■■-....**
	225	149 (200)	491 (362)	270	395	97.2	3300	4500	**1PH8224-■■L■■-....**
		185 (248)	609 (449)	335	390	97.1	3300	4500	**1PH8226-■■L■■-....**
		215 (288)	708 (522)	390	395	97.1	3300	4500	**1PH8228-■■L■■-....**
3300	80	4.5 (6.03)	13 (9.59)	13.5	327	112.6	10000	10000	**1PH8083-■■M■■-....**
		5.2 (6.97)	15 (11.1)	17.1	303	112.3	10000	10000	**1PH8087-■■M■■-....**
	100	9.3 (12.5)	27 (19.9)	25.7	326	112.1	16000	9000	**1PH8103-■■M■■-....**
		13 (17.4)	38 (28.0)	38	314	111.7	18000	9000	**1PH8107-■■M■■-....**

For versions, see Article No. supplements and options.

For footnotes, see next page.

© Siemens AG 2017

Motor type (repeated)	Power factor	Magnetizing current	Efficiency	Moment of inertia without holding brake	Weight without holding brake, approx.	Terminal box	SINAMICS S120 Motor Module: Rated output current [3]	SINAMICS S120 Motor Module: Internal air cooling For further components, see SINAMICS S120 drive system
	cos φ	I_μ	η	J			I_{rated}	
		A		kgm² (lb$_f$-in-s²)	kg (lb)	Type	A	Article No.
1PH8083- . . F . . .	0.80	3.8	0.831	0.0064 (0.06)	32 (70.5)	gk803	9	**6SL3120-■TE21-0AD .**
1PH8087- . . F . . .	0.78	5.3	0.838	0.0089 (0.08)	39 (86)	gk803	18	**6SL3120-■TE21-8A■ .**
1PH8101- . . F . . .	0.80	6.0	0.852	0.0138 (0.12)	42 (92.6)	gk813	18	**6SL3120-■TE21-8A■ .**
1PH8103- . . F . . .	0.81	6.0	0.859	0.0172 (0.15)	51 (112)	gk813	18	**6SL3120-■TE21-8A■ .**
1PH8105- . . F . . .	0.78	8.8	0.878	0.0252 (0.22)	65 (143)	gk813	18	**6SL3120-■TE21-8A■ .**
1PH8107- . . F . . .	0.80	10.9	0.878	0.0289 (0.26)	73 (161)	gk813	30	**6SL3120-1TE23-0A■ .**
1PH8131- . . F . . .	0.84	10.3	0.914	0.0590 (0.52)	89 (196)	gk833	30	**6SL3120-1TE23-0A■ .**
1PH8133- . . F . . .	0.85	13.6	0.913	0.0760 (0.67)	106 (234)	gk833	45	**6SL3120-1TE24-5AA .**
1PH8135- . . F . . .	0.84	18.3	0.909	0.0940 (0.83)	125 (276)	gk833	45	**6SL3120-1TE24-5AA .**
1PH8137- . . F . . .	0.86	23.1	0.907	0.1090 (0.96)	141 (311)	gk833	60	**6SL3120-1TE26-0AA .**
1PH8163- . . F . . .	0.87	24.6	0.926	0.2160 (1.91)	196 (432)	gk863	85	**6SL3120-1TE28-5AA .**
1PH8165- . . F . . .	0.88	25.8	0.934	0.2320 (2.05)	230 (507)	gk863	85	**6SL3120-1TE28-5AA .**
1PH8184- . . F . . .	0.79	64	0.944	0.489 (4.33)	350 (772)	1XB7322-P05	132	**6SL3120-1TE31-3AA .**
1PH8186- . . F . . .	0.82	83	0.949	0.652 (5.77)	422 (930)	1XB7322-P05	200	**6SL3120-1TE32-0AA .**
1PH8224- . . F . . .	0.85	87	0.956	1.48 (13.1)	610 (1345)	1XB7322-P05	200	**6SL3120-1TE32-0AA .**
1PH8226- . . F . . .	0.83	119	0.960	1.93 (17.1)	740 (1631)	1XB7422-P06	310	**6SL3320-1TE33-1AA .**
1PH8228- . . F . . .	0.82	170	0.961	2.33 (20.6)	870 (1918)	1XB7700-P02	380	**6SL3320-1TE33-8AA .**
1PH8284-1. F . . .	0.86	162	0.964	4.20 (37.2)	1200 (2646)	1XB7700-P02	490	**6SL3320-1TE35-0AA .**
1PH8286-1. F . . .	0.88	183	0.966	5.20 (46.0)	1400 (3086)	1XB7700-P02	490	**6SL3320-1TE35-0AA .**
1PH8288-1. F . . .	0.88	233	0.967	6.30 (55.8)	1650 (3638)	1XB7712-P03	745	**6SL3320-1TE37-5AA .**
1PH8083- . . G . . .	0.78	5.7	0.852	0.0064 (0.06)	32 (70.5)	gk803	18	**6SL3120-■TE21-8A■ .**
1PH8087- . . G . . .	0.79	6.8	0.859	0.0089 (0.08)	39 (86)	gk803	18	**6SL3120-■TE21-8A■ .**
1PH8103- . . G . . .	0.79	8.1	0.891	0.0172 (0.15)	51 (112)	gk813	18	**6SL3120-■TE21-8A■ .**
1PH8107- . . G . . .	0.78	13.0	0.909	0.0289 (0.26)	73 (161)	gk813	30	**6SL3120-1TE23-0A■ .**
1PH8133- . . G . . .	0.84	18.1	0.933	0.0760 (0.67)	106 (234)	gk833	45	**6SL3120-1TE24-5AA .**
1PH8135- . . G . . .	0.85	20.6	0.919	0.0940 (0.83)	125 (276)	gk833	60	**6SL3120-1TE26-0AA .**
1PH8137- . . G . . .	0.86	21.9	0.929	0.1090 (0.96)	141 (311)	gk833	60	**6SL3120-1TE26-0AA .**
1PH8163- . . G . . .	0.87	28.2	0.935	0.2160 (1.91)	196 (432)	gk863	85	**6SL3120-1TE28-5AA .**
1PH8165- . . G . . .	0.86	31.0	0.932	0.2320 (2.05)	230 (507)	gk863	85	**6SL3120-1TE28-5AA .**
1PH8184- . . L . . .	0.82	76	0.952	0.489 (4.33)	350 (772)	1XB7322-P05	200	**6SL3120-1TE32-0AA .**
1PH8186- . . L . . .	0.80	106	0.954	0.652 (5.77)	422 (930)	1XB7422-P06	260	**6SL3120-1TE32-6AA .**
1PH8224- . . L . . .	0.85	115	0.957	1.48 (13.1)	610 (1345)	1XB7700-P02	310	**6SL3320-1TE33-1AA .**
1PH8226- . . L . . .	0.85	152	0.960	1.93 (17.1)	740 (1631)	1XB7700-P02	380	**6SL3320-1TE33-8AA .**
1PH8228- . . L . . .	0.84	183	0.961	2.33 (20.6)	870 (1918)	1XB7700-P02	490	**6SL3320-1TE35-0AA .**
1PH8083- . . M . . .	0.74	7.3	0.875	0.0064 (0.06)	32 (70.5)	gk803	18	**6SL3120-■TE21-8A■ .**
1PH8087- . . M . . .	0.73	9.2	0.878	0.0089 (0.08)	39 (86)	gk803	18	**6SL3120-■TE21-8A■ .**
1PH8103- . . M . . .	0.78	12.2	0.900	0.0172 (0.15)	51 (112)	gk813	30	**6SL3120-1TE23-0A■ .**
1PH8107- . . M . . .	0.78	12.2	0.900	0.0289 (0.26)	73 (161)	gk813	45	**6SL3120-1TE24-5AA .**

Single Motor Module	**1**
Double Motor Module	**2**
Motor Module	
for continuous load with 200 % overload (C-type)	**C**
for highly dynamic, intermittent load cycles with 300 % overload (D-type)	**D**
Version status	

[1] n_2: Maximum permissible thermal speed at constant power.

[2] n_{max}: Maximum speed that must not be exceeded (applicable to Standard: 14th digit of article number A to H); for performance bearing (14th digit = "L"), the increased maximum speeds apply; limitations must be taken into consideration where necessary (e.g. with holding brake), see Article No. supplements.

[3] I_{rated}: Output current of the Motor Module at rated pulse frequency (see SINAMICS S120 drive system).
The rated motor data is valid for 4 kHz (SH 80 to 160) or 2 kHz (SH 180 to 280).

© Siemens AG 2017

Selection and ordering data

Rated speed	Shaft height	Rated power	Rated torque	Rated current	Rated voltage	Rated frequency	Operating speed during field weakening, max. [1]	Speed, max. [2]	SIMOTICS M-1PH8 asynchronous motors Forced ventilation
n_{rated}	SH	P_{rated}	M_{rated}	I_{rated}	U_{rated}	f_{rated}	n_2	n_{max}	
rpm		kW (hp)	Nm (lb_f-ft)	A	V	Hz	rpm	rpm	Article No.
Line voltage 480 V 3 AC, Smart/Basic Line Module									
600	100	3.8 (5.10)	60 (44.3)	8.8	406	22.0	1500	7000	**1PH8107-■■B■■-....**
	132	4.3 (5.77)	68 (50.2)	9	384	21.3	1500	6000	**1PH8131-■■B■■-....**
		7.8 (10.5)	124 (91.5)	15.5	421	21.8	1200	6000	**1PH8133-■■B■■-....**
		9.6 (12.9)	153 (113)	18	443	21.9	1000	6000	**1PH8135-■■B■■-....**
		10.3 (13.8)	165 (122)	18	458	21.4	1300	6000	**1PH8137-■■B■■-....**
	160	14.5 (19.4)	231 (170)	30	370	21.0	2150	6500	**1PH8163-■■B■■-....**
		19 (25.5)	302 (223)	35	420	20.8	1800	6500	**1PH8165-■■B■■-....**
	180	25 (33.5)	398 (294)	49	410	20.7	3000	5000	**1PH8184-■■B■■-....**
		32 (42.9)	509 (375)	66	400	20.6	3200	5000	**1PH8186-■■B■■-....**
	225	45 (60.3)	716 (528)	83	405	20.5	2600	4500	**1PH8224-■■B■■-....**
		59 (79.1)	939 (693)	110	395	20.5	2700	4500	**1PH8226-■■B■■-....**
		72 (96.6)	1146 (845)	130	410	20.5	2800	4500	**1PH8228-■■B■■-....**
	280	95 (127)	1519 (1120)	154	460	20.3	1800	3300	**1PH8284-1■B1■-....**
		120 (161)	1916 (1413)	188	460	20.3	1800	3300	**1PH8286-1■B1■-....**
		155 (208)	2474 (1825)	245	460	20.3	1800	3300	**1PH8288-1■B1■-....**
1000	180	39 (52.3)	372 (274)	65	460	34.0	3700	5000	**1PH8184-■■C■■-....**
		50 (67.1)	478 (353)	83	450	33.9	4000	5000	**1PH8186-■■C■■-....**
	225	71 (95.2)	678 (500)	126	425	33.8	3700	4500	**1PH8224-■■C■■-....**
		92 (123)	879 (648)	156	440	33.8	3900	4500	**1PH8226-■■C■■-....**
		115 (154)	1098 (810)	182	450	33.8	4000	4500	**1PH8228-■■C■■-....**
	280	150 (201)	1433 (1057)	230	455	33.7	2300	3300	**1PH8284-1■C1■-....**
		185 (248)	1767 (1303)	280	460	33.7	2300	3300	**1PH8286-1■C1■-....**
		230 (308)	2197 (1620)	355	460	33.6	2300	3300	**1PH8288-1■C1■-....**
1350	100	4.7 (6.30)	33 (24.3)	9.7	423	47.3	3500	9000	**1PH8103-■■D■■-....**
		8.0 (10.7)	57 (42.0)	17	400	47.1	5045	9000	**1PH8107-■■D■■-....**
	132	10.6 (14.2)	75 (55.3)	20	416	46.5	3000	8000	**1PH8131-■■D■■-....**
		15 (20.1)	106 (78.2)	28	417	46.5	3500	8000	**1PH8133-■■D■■-....**
		22 (29.5)	156 (115)	42	404	46.4	4000	8000	**1PH8137-■■D■■-....**
	160	28 (37.5)	198 (146)	52	400	45.8	4000	6500	**1PH8163-■■D■■-....**
		34 (45.6)	241 (178)	66	387	45.8	5600	6500	**1PH8165-■■D■■-....**
	180	50 (67.1)	354 (261)	84	450	45.7	5000	5000	**1PH8184-■■D■■-....**
		67 (39.8)	474 (350)	112	450	45.6	5000	5000	**1PH8186-■■D■■-....**
	225	92 (123)	651 (480)	154	450	45.5	3400	4500	**1PH8224-■■D■■-....**
		120 (161)	849 (626)	188	460	45.5	3400	4500	**1PH8226-■■D■■-....**
		147 (197)	1040 (767)	225	460	45.5	3400	4500	**1PH8228-■■D■■-....**
	280	200 (268)	1416 (1044)	315	460	45.3	2200	3300	**1PH8284-1■D1■-....**
		245 (329)	1733 (1278)	410	445	45.3	2200	3300	**1PH8286-1■D1■-....**
		305 (409)	2158 (1592)	495	450	45.3	2200	3300	**1PH8288-1■D1■-....**

For versions, see Article No. supplements and options.

For footnotes, see next page.

© Siemens AG 2017

Motor type (repeated)	Power factor	Magne-tizing current	Efficiency	Moment of inertia without holding brake	Weight without hold-ing brake, approx.	Terminal box	SINAMICS S120 Motor Module: Rated output current [3]	SINAMICS S120 Motor Module: Internal air cooling For further components, see SINAMICS S120 drive system
	cos φ	I_μ	η	J			I_{rated}	
		A		kgm² (lbf-in-s²)	kg (lb)	Type	A	Article No.
1PH8107- . . B . . .	0.82	4.4	0.760	0.0289 (0.26)	73 (161)	gk813	9	**6SL3120-■TE21-0AD .**
1PH8131- . . B . . .	0.88	3.5	0.830	0.0590 (0.52)	89 (196)	gk833	9	**6SL3120-■TE21-0AD .**
1PH8133- . . B . . .	0.89	5.3	0.810	0.0760 (0.67)	106 (234)	gk833	18	**6SL3120-■TE21-8A■ .**
1PH8135- . . B . . .	0.90	5.6	0.810	0.0940 (0.83)	125 (276)	gk833	18	**6SL3120-■TE21-8A■ .**
1PH8137- . . B . . .	0.88	6.8	0.850	0.1090 (0.96)	141 (311)	gk833	18	**6SL3120-■TE21-8A■ .**
1PH8163- . . B . . .	0.90	8.1	0.851	0.2160 (1.91)	196 (432)	gk863	30	**6SL3120-1TE23-0A■ .**
1PH8165- . . B . . .	0.88	12.0	0.850	0.2320 (2.05)	230 (507)	gk863	45	**6SL3120-1TE24-5AA .**
1PH8184- . . B . . .	0.81	26	0.882	0.489 (4.33)	350 (772)	1XB7322-P05	60	**6SL3120-1TE26-0AA .**
1PH8186- . . B . . .	0.79	37	0.892	0.652 (5.77)	422 (930)	1XB7322-P05	85	**6SL3120-1TE28-5AA .**
1PH8224- . . B . . .	0.85	37	0.912	1.48 (13.1)	610 (1345)	1XB7322-P05	85	**6SL3120-1TE28-5AA .**
1PH8226- . . B . . .	0.85	49	0.921	1.93 (17.1)	740 (1631)	1XB7322-P05	132	**6SL3120-1TE31-3AA .**
1PH8228- . . B . . .	0.84	62	0.927	2.33 (20.6)	870 (1918)	1XB7322-P05	132	**6SL3120-1TE31-3AA .**
1PH8284-1. B . . .	0.82	77	0.943	4.20 (37.2)	1200 (2646)	1XB7700-P02	200	**6SL3120-1TE32-0AA .**
1PH8286-1. B . . .	0.85	88	0.945	5.20 (46.0)	1400 (3086)	1XB7700-P02	200	**6SL3120-1TE32-0AA .**
1PH8288-1. B . . .	0.84	121	0.948	6.30 (55.8)	1650 (3638)	1XB7700-P02	260	**6SL3120-1TE32-6AA .**
1PH8184- . . C . . .	0.82	32	0.917	0.489 (4.33)	350 (772)	1XB7322-P05	85	**6SL3120-1TE28-5AA .**
1PH8186- . . C . . .	0.83	42	0.929	0.652 (5.77)	422 (930)	1XB7322-P05	85	**6SL3120-1TE28-5AA .**
1PH8224- . . C . . .	0.81	64	0.943	1.48 (13.1)	610 (1345)	1XB7322-P05	132	**6SL3120-1TE31-3AA .**
1PH8226- . . C . . .	0.82	77	0.948	1.93 (17.1)	740 (1631)	1XB7322-P05	200	**6SL3120-1TE32-0AA .**
1PH8228- . . C . . .	0.85	82	0.949	2.33 (20.6)	870 (1918)	1XB7322-P05	200	**6SL3120-1TE32-0AA .**
1PH8284-1. C . . .	0.86	101	0.957	4.20 (37.2)	1200 (2646)	1XB7700-P02	260	**6SL3120-1TE32-6AA .**
1PH8286-1. C . . .	0.86	122	0.960	5.20 (46.0)	1400 (3086)	1XB7700-P02	310	**6SL3320-1TE33-1AA .**
1PH8288-1. C . . .	0.84	172	0.962	6.30 (55.8)	1650 (3638)	1XB7700-P02	380	**6SL3320-1TE33-8AA .**
1PH8103- . . D . . .	0.82	4.4	0.848	0.0172 (0.15)	51 (112)	gk813	18	**6SL3120-■TE21-8A■ .**
1PH8107- . . D . . .	0.80	8.2	0.867	0.0289 (0.26)	73 (161)	gk813	18	**6SL3120-■TE21-8A■ .**
1PH8131- . . D . . .	0.86	7.9	0.900	0.0590 (0.52)	73 (161)	gk833	30	**6SL3120-1TE23-0A■ .**
1PH8133- . . D . . .	0.86	10.7	0.904	0.0760 (0.67)	106 (234)	gk833	30	**6SL3120-1TE23-0A■ .**
1PH8137- . . D . . .	0.86	15.9	0.902	0.1090 (0.96)	141 (311)	gk833	45	**6SL3120-1TE24-5AA .**
1PH8163- . . D . . .	0.88	17.7	0.924	0.2160 (1.91)	196 (432)	gk863	60	**6SL3120-1TE26-0AA .**
1PH8165- . . D . . .	0.86	22.5	0.928	0.2320 (2.05)	230 (507)	gk863	85	**6SL3120-1TE28-5AA .**
1PH8184- . . D . . .	0.82	41	0.936	0.489 (4.33)	350 (772)	1XB7322-P05	85	**6SL3120-1TE28-5AA .**
1PH8186- . . D . . .	0.82	55	0.939	0.652 (5.77)	422 (930)	1XB7322-P05	132	**6SL3120-1TE31-3AA .**
1PH8224- . . D . . .	0.81	78	0.951	1.48 (13.1)	610 (1345)	1XB7322-P05	200	**6SL3120-1TE32-0AA .**
1PH8226- . . D . . .	0.84	88	0.954	1.93 (17.1)	740 (1631)	1XB7322-P05	200	**6SL3120-1TE32-0AA .**
1PH8228- . . D . . .	0.86	99	0.957	2.33 (20.6)	870 (1918)	1XB7422-P06	260	**6SL3120-1TE32-6AA .**
1PH8284-1. D . . .	0.83	151	0.962	4.20 (37.2)	1200 (2646)	1XB7700-P02	310 [4]	**6SL3320-1TE33-1AA .**
1PH8286-1. D . . .	0.81	217	0.963	5.20 (46.0)	1400 (3086)	1XB7700-P02	490	**6SL3320-1TE35-0AA .**
1PH8288-1. D . . .	0.82	251	0.965	6.30 (55.8)	1650 (3638)	1XB7700-P02	490 [4]	**6SL3320-1TE35-0AA .**

Single Motor Module	**1**
Double Motor Module	**2**
Motor Module	
for continuous load with 200 % overload (C-type)	**C**
for highly dynamic, intermittent load cycles with 300 % overload (D-type)	**D**
Version status	

[1] n_2: Maximum permissible thermal speed at constant power.

[2] n_{max}: Maximum speed that must not be exceeded (applicable to Standard: 14th digit of article number A to H); for performance bearing (14th digit = "L"), the increased maximum speeds apply; limitations must be taken into consideration where necessary (e.g. with holding brake), see Article No. supplements.

[3] I_{rated}: Output current of the Motor Module at rated pulse frequency (see SINAMICS S120 drive system).
The rated motor data is valid for 4 kHz (SH 80 to 160) or 2 kHz (SH 180 to 280).

[4] The output current of the Motor Module is lower than the rated motor current for the pulse frequency on which it is based.

© Siemens AG 2017

Selection and ordering data

Rated speed	Shaft height	Rated power	Rated torque	Rated current	Rated voltage	Rated frequency	Operating speed during field weakening, max. [1]	Speed, max. [2]	SIMOTICS M-1PH8 asynchronous motors Forced ventilation
n_{rated}	SH	P_{rated}	M_{rated}	I_{rated}	U_{rated}	f_{rated}	n_2	n_{max}	
rpm		kW (hp)	Nm (lb_f-ft)	A	V	Hz	rpm	rpm	Article No.
Line voltage 480 V 3 AC, Smart/Basic Line Module (continued)									
2000	80	3.7 (4.96)	18 (13.3)	7.6	447	70.0	5550	10000	**1PH8083-■■F■■-....**
		4.9 (6.57)	23 (17.0)	10	435	69.9	6100	10000	**1PH8087-■■F■■-....**
	100	4.7 (6.30)	22 (16.2)	12.5	343	69.0	7500	9000	**1PH8101-■■F■■-....**
		7 (9.39)	33 (24.3)	12.7	460	69.1	4100	9000	**1PH8103-■■F■■-....**
		9 (12.1)	43 (31.7)	17	453	68.5	6180	9000	**1PH8105-■■F■■-....**
		11 (14.8)	53 (39.1)	21.5	428	68.6	5500	9000	**1PH8107-■■F■■-....**
	132	15 (20.1)	72 (53.1)	24	460	68.2	5300	8000	**1PH8131-■■F■■-....**
		20 (26.8)	96 (70.8)	34	445	68.0	6200	8000	**1PH8133-■■F■■-....**
		24 (32.2)	115 (84.8)	43	434	67.9	7100	8000	**1PH8135-■■F■■-....**
		28 (37.5)	134 (98.8)	55	401	67.9	4000	8000	**1PH8137-■■F■■-....**
	160	37 (49.6)	177 (131)	68	416	67.4	3550	6500	**1PH8163-■■F■■-....**
		45 (60.3)	215 (159)	75	440	67.5	3300	6500	**1PH8165-■■F■■-....**
	180	68 (91.2)	325 (240)	118	450	67.2	5000	5000	**1PH8184-■■F■■-....**
		94 (126)	449 (331)	160	445	67.2	5000	5000	**1PH8186-■■F■■-....**
	225	124 (166)	592 (437)	196	460	67.2	2900	4500	**1PH8224-■■F■■-....**
		153 (205)	731 (539)	245	450	67.1	3100	4500	**1PH8226-■■F■■-....**
		196 (263)	936 (690)	325	450	67.1	3200	4500	**1PH8228-■■F■■-....**
	280	255 (342)	1218 (898)	390	455	67.0	2200	3300	**1PH8284-1■F1■-....**
		310 (416)	1481 (1092)	460	455	67.0	2200	3300	**1PH8286-1■F1■-....**
		385 (516)	1838 (1356)	570	455	67.0	2200	3300	**1PH8288-1■F1■-....**
2650	80	4.6 (6.17)	17 (12.5)	11.2	376	91.6	10000	10000	**1PH8083-■■G■■-....**
		6 (8.05)	22 (16.2)	13.6	390	91.6	10000	10000	**1PH8087-■■G■■-....**
	100	8 (10.7)	29 (21.4)	16	434	90.4	7500	9000	**1PH8103-■■G■■-....**
		13.0 (17.4)	47 (34.7)	24	460	90.0	7000	9000	**1PH8107-■■G■■-....**
	132	24 (32.2)	86 (63.4)	41	456	89.6	7000	8000	**1PH8133-■■G■■-....**
		26 (34.9)	94 (69.3)	48	424	89.6	6000	8000	**1PH8135-■■G■■-....**
		30 (40.2)	108 (79.7)	52	460	89.4	4250	8000	**1PH8137-■■G■■-....**
	160	40 (53.6)	144 (106)	76	390	89.2	3500	6500	**1PH8163-■■G■■-....**
		50 (67.1)	180 (133)	85	440	89.0	3250	6500	**1PH8165-■■G■■-....**
3400	180	65 (87.2)	183 (135)	120	460	113.7	5000	5000	**1PH8184-■■L■■-....**
		81 (109)	228 (168)	158	455	113.7	5000	5000	**1PH8186-■■L■■-....**
	225	85 (114)	239 (176)	168	460	113.6	3600	4500	**1PH8224-■■L■■-....**
		90 (121)	253 (187)	205	460	113.5	3600	4500	**1PH8226-■■L■■-....**
		95 (127)	267 (197)	225	460	113.5	3600	4500	**1PH8228-■■L■■-....**
3600	80	4.9 (6.57)	13 (9.59)	14	355	122.6	10000	10000	**1PH8083-■■M■■-....**
		5.7 (7.64)	15 (11.1)	17.1	329	122.4	10000	10000	**1PH8087-■■M■■-....**
	100	10 (13.4)	27 (19.9)	25.4	355	122.1	17650	9000	**1PH8103-■■M■■-....**
		14 (18.8)	37 (27.3)	37.5	350	121.6	18000	9000	**1PH8107-■■M■■-....**

For versions, see Article No. supplements and options.

For footnotes, see next page.

© Siemens AG 2017

Motor type (repeated)	Power factor	Magne-tizing current	Efficiency	Moment of inertia without holding brake	Weight without hold-ing brake, approx.	Terminal box	SINAMICS S120 Motor Module: Rated output current [3]	SINAMICS S120 Motor Module: Internal air cooling For further components, see SINAMICS S120 drive system
	cos φ	I_μ	η	J			I_{rated}	
		A		kgm² (lb$_f$-in-s²)	kg (lb)	Type	A	Article No.
1PH8083- . . F . . .	0.79	3.7	0.850	0.0064 (0.06)	32 (70.5)	gk803	9	**6SL3120-■TE21-0AD .**
1PH8087- . . F . . .	0.80	4.9	0.864	0.0089 (0.08)	39 (86)	gk803	18	**6SL3120-■TE21-8A■ .**
1PH8101- . . F . . .	0.79	6.0	0.871	0.0138 (0.12)	42 (92.6)	gk813	18	**6SL3120-■TE21-8A■ .**
1PH8103- . . F . . .	0.81	5.8	0.894	0.0172 (0.15)	51 (112)	gk813	18	**6SL3120-■TE21-8A■ .**
1PH8105- . . F . . .	0.78	8.7	0.911	0.0252 (0.22)	65 (143)	gk813	18	**6SL3120-■TE21-8A■ .**
1PH8107- . . F . . .	0.79	10.8	0.901	0.0289 (0.26)	73 (161)	gk813	30	**6SL3120-1TE23-0A■ .**
1PH8131- . . F . . .	0.86	9.2	0.931	0.0590 (0.52)	89 (196)	gk833	30	**6SL3120-1TE23-0A■ .**
1PH8133- . . F . . .	0.85	13.5	0.933	0.0760 (0.67)	106 (234)	gk833	45	**6SL3120-1TE24-5AA .**
1PH8135- . . F . . .	0.84	18.1	0.929	0.0940 (0.83)	125 (276)	gk833	45	**6SL3120-1TE24-5AA .**
1PH8137- . . F . . .	0.84	23.1	0.931	0.1090 (0.96)	141 (311)	gk833	60	**6SL3120-1TE26-0AA .**
1PH8163- . . F . . .	0.86	24.6	0.932	0.2160 (1.91)	196 (432)	gk863	85	**6SL3120-1TE28-5AA .**
1PH8165- . . F . . .	0.89	23.6	0.936	0.2320 (2.05)	230 (507)	gk863	85	**6SL3120-1TE28-5AA .**
1PH8184- . . F . . .	0.78	65	0.947	0.489 (4.33)	350 (772)	1XB7322-P05	132	**6SL3120-1TE31-3AA .**
1PH8186- . . F . . .	0.80	86	0.952	0.652 (5.77)	422 (930)	1XB7322-P05	200	**6SL3120-1TE32-0AA .**
1PH8224- . . F . . .	0.83	90	0.957	1.48 (13.1)	610 (1345)	1XB7322-P05	200	**6SL3120-1TE32-0AA .**
1PH8226- . . F . . .	0.83	119	0.961	1.93 (17.1)	740 (1631)	1XB7422-P06	310	**6SL3320-1TE33-1AA .**
1PH8228- . . F . . .	0.81	169	0.962	2.33 (20.6)	870 (1918)	1XB7700-P02	380	**6SL3320-1TE33-8AA .**
1PH8284-1. F . . .	0.86	162	0.965	4.20 (37.2)	1200 (2646)	1XB7700-P02	490	**6SL3320-1TE35-0AA .**
1PH8286-1. F . . .	0.88	182	0.967	5.20 (46.0)	1400 (3086)	1XB7700-P02	490	**6SL3320-1TE35-0AA .**
1PH8288-1. F . . .	0.88	232	0.967	6.30 (55.8)	1650 (3638)	1XB7712-P03	745	**6SL3320-1TE37-5AA .**
1PH8083- . . G . . .	0.78	5.7	0.862	0.0064 (0.06)	32 (70.5)	gk803	18	**6SL3120-■TE21-8A■ .**
1PH8087- . . G . . .	0.79	6.5	0.884	0.0089 (0.08)	39 (86)	gk803	18	**6SL3120-■TE21-8A■ .**
1PH8103- . . G . . .	0.78	8.1	0.913	0.0172 (0.15)	51 (112)	gk813	18	**6SL3120-■TE21-8A■ .**
1PH8107- . . G . . .	0.77	12.8	0.932	0.0289 (0.26)	73 (161)	gk813	30	**6SL3120-1TE23-0A■ .**
1PH8133- . . G . . .	0.83	18.1	0.949	0.0760 (0.67)	106 (234)	gk833	45	**6SL3120-1TE24-5AA .**
1PH8135- . . G . . .	0.84	20.6	0.923	0.0940 (0.83)	125 (276)	gk833	60	**6SL3120-1TE26-0AA .**
1PH8137- . . G . . .	0.83	22.4	0.941	0.1090 (0.96)	141 (311)	gk833	60	**6SL3120-1TE26-0AA .**
1PH8163- . . G . . .	0.89	23.1	0.936	0.2160 (1.91)	196 (432)	gk863	85	**6SL3120-1TE28-5AA .**
1PH8165- . . G . . .	0.87	28.9	0.932	0.2320 (2.05)	230 (507)	gk863	85	**6SL3120-1TE28-5AA .**
1PH8184- . . L . . .	0.72	77	0.944	0.489 (4.33)	350 (772)	1XB7322-P05	200	**6SL3120-1TE32-0AA .**
1PH8186- . . L . . .	0.69	109	0.943	0.652 (5.77)	422 (930)	1XB7422-P06	260	**6SL3120-1TE32-6AA .**
1PH8224- . . L . . .	0.68	115	0.934	1.48 (13.1)	610 (1345)	1XB7700-P02	310	**6SL3320-1TE33-1AA .**
1PH8226- . . L . . .	0.60	156	0.926	1.93 (17.1)	740 (1631)	1XB7700-P02	380	**6SL3320-1TE33-8AA .**
1PH8228- . . L . . .	0.57	183	0.922	2.33 (20.6)	870 (1918)	1XB7700-P02	490	**6SL3320-1TE35-0AA .**
1PH8083- . . M . . .	0.74	7.3	0.881	0.0064 (0.06)	32 (70.5)	gk803	18	**6SL3120-■TE21-8A■ .**
1PH8087- . . M . . .	0.73	9.2	0.878	0.0089 (0.08)	39 (86)	gk803	18	**6SL3120-■TE21-8A■ .**
1PH8103- . . M . . .	0.77	12.3	0.910	0.0172 (0.15)	51 (112)	gk813	30	**6SL3120-1TE23-0A■ .**
1PH8107- . . M . . .	0.77	12.3	0.910	0.0289 (0.26)	73 (161)	gk813	45	**6SL3120-1TE24-5AA .**

Single Motor Module	**1**
Double Motor Module	**2**
Motor Module	
for continuous load with 200 % overload (C-type)	**C**
for highly dynamic, intermittent load cycles with 300 % overload (D-type)	**D**
Version status	

[1] n_2: Maximum permissible thermal speed at constant power.

[2] n_{max}: Maximum speed that must not be exceeded (applicable to Standard: 14th digit of article number A to H); for performance bearing (14th digit = "L"), the increased maximum speeds apply; limitations must be taken into consideration where necessary (e.g. with holding brake), see Article No. supplements.

[3] I_{rated}: Output current of the Motor Module at rated pulse frequency (see SINAMICS S120 drive system).
The rated motor data is valid for 4 kHz (SH 80 to 160) or 2 kHz (SH 180 to 280).

© Siemens AG 2017

Selection and ordering data

Rated speed	Shaft height	Rated power	Rated torque	Rated current	Rated voltage	Rated frequency	Operating speed during field weakening, max. [1]	Speed, max. [2]	SIMOTICS M-1PH8 asynchronous motors Forced ventilation
n_{rated}	SH	P_{rated}	M_{rated}	I_{rated}	U_{rated}	f_{rated}	n_2	n_{max}	
rpm		kW (hp)	Nm (lb_f-ft)	A	V	Hz	rpm	rpm	Article No.
Line voltage 480 V 3 AC, Active Line Module									
700	100	4.4 (5.90)	60 (44.3)	8.7	452	25.5	1500	7000	**1PH8107-■■B■■-....**
	132	4.9 (6.57)	67 (49.4)	9	450	24.6	1500	6000	**1PH8131-■■B■■-....**
		9.1 (12.2)	124 (91.5)	15.5	480	25.2	1200	6000	**1PH8133-■■B■■-....**
		11.2 (15.0)	153 (113)	18	500	25.3	1000	6000	**1PH8135-■■B■■-....**
		11.5 (15.4)	157 (116)	17.5	500	24.9	1300	6000	**1PH8137-■■B■■-....**
	160	16.9 (22.7)	231 (170)	30	427	24.4	2250	6500	**1PH8163-■■B■■-....**
		22 (29.5)	300 (221)	35	475	24.3	1900	6500	**1PH8165-■■B■■-....**
	180	29 (38.9)	396 (292)	49	475	24.0	3100	5000	**1PH8184-■■B■■-....**
		37 (49.6)	505 (372)	65	470	23.9	3400	5000	**1PH8186-■■B■■-....**
	225	52 (69.7)	709 (523)	82	470	23.9	2700	4500	**1PH8224-■■B■■-....**
		68 (91.2)	928 (684)	108	465	23.8	2800	4500	**1PH8226-■■B■■-....**
		84 (113)	1146 (845)	130	480	23.8	2900	4500	**1PH8228-■■B■■-....**
	280	105 (141)	1433 (1057)	150	500	23.7	1400	3300	**1PH8284-1■B1■-....**
		132 (177)	1801 (1328)	184	500	23.7	1500	3300	**1PH8286-1■B1■-....**
		165 (221)	2251 (1660)	230	500	23.7	1600	3300	**1PH8288-1■B1■-....**
1100	180	42 (56.3)	365 (269)	64	500	37.3	3800	5000	**1PH8184-■■C■■-....**
		55 (73.8)	478 (353)	83	500	37.3	4100	5000	**1PH8186-■■C■■-....**
	225	78 (105)	677 (499)	126	470	37.1	3700	4500	**1PH8224-■■C■■-....**
		101 (135)	877 (647)	154	500	37.1	3900	4500	**1PH8226-■■C■■-....**
		126 (169)	1094 (807)	182	500	37.1	4000	4500	**1PH8228-■■C■■-....**
	280	155 (208)	1346 (993)	220	500	37.0	2400	3300	**1PH8284-1■C1■-....**
		191 (256)	1658 (1223)	270	500	37.0	2400	3300	**1PH8286-1■C1■-....**
		238 (319)	2066 (1524)	345	500	37.0	2400	3300	**1PH8288-1■C1■-....**
1500	100	5.2 (6.97)	33 (24.3)	9.7	470	52.2	3500	9000	**1PH8103-■■D■■-....**
		8.8 (11.8)	56 (41.3)	17.0	440	52.0	5750	9000	**1PH8107-■■D■■-....**
	132	11.7 (15.7)	74 (54.6)	20	460	51.5	3000	8000	**1PH8131-■■D■■-....**
		16.6 (22.3)	106 (78.2)	28	459	51.5	3500	8000	**1PH8133-■■D■■-....**
		24 (32.2)	153 (113)	41	447	51.5	4500	8000	**1PH8137-■■D■■-....**
	160	31 (41.6)	197 (145)	52	442	50.9	4000	6500	**1PH8163-■■D■■-....**
		37.7 (50.6)	240 (177)	65	430	50.8	5000	6500	**1PH8165-■■D■■-....**
	180	53 (71.1)	337 (249)	80	500	50.6	5000	5000	**1PH8184-■■D■■-....**
		73 (97.9)	465 (343)	110	500	50.6	5000	5000	**1PH8186-■■D■■-....**
	225	92 (123)	586 (432)	142	500	50.4	3600	4500	**1PH8224-■■D■■-....**
		120 (161)	764 (563)	174	500	50.4	3600	4500	**1PH8226-■■D■■-....**
		147 (197)	936 (690)	210	500	50.5	3600	4500	**1PH8228-■■D■■-....**
	280	200 (268)	1273 (939)	290	500	50.3	2200	3300	**1PH8284-1■D1■-....**
		245 (329)	1560 (1151)	380	495	50.3	2200	3300	**1PH8286-1■D1■-....**
		305 (409)	1942 (1432)	455	500	50.3	2200	3300	**1PH8288-1■D1■-....**

For versions, see Article No. supplements and options.

For footnotes, see next page.

© Siemens AG 2017

Motor type (repeated)	Power factor	Magne-tizing current	Efficiency	Moment of inertia without holding brake	Weight without hold-ing brake, approx.	Terminal box	SINAMICS S120 Motor Module: Rated output current [3]	SINAMICS S120 Motor Module: Internal air cooling For further components, see SINAMICS S120 drive system
	cos φ	I_μ	η	J			I_{rated}	
		A		kgm² (lbf-in-s²)	kg (lb)	Type	A	Article No.
1PH8107- . . B . . .	0.83	4.0	0.790	0.0289 (0.26)	73 (161)	gk813	9	**6SL3120-■TE21-0AD .**
1PH8131- . . B . . .	0.85	3.5	0.834	0.0590 (0.52)	89 (196)	gk833	9	**6SL3120-■TE21-0AD .**
1PH8133- . . B . . .	0.89	5.0	0.830	0.0760 (0.67)	106 (234)	gk833	18	**6SL3120-■TE21-8A■ .**
1PH8135- . . B . . .	0.9	5.3	0.830	0.0940 (0.83)	125 (276)	gk833	18	**6SL3120-■TE21-8A■ .**
1PH8137- . . B . . .	0.89	5.5	0.860	0.1090 (0.96)	141 (311)	gk833	18	**6SL3120-■TE21-8A■ .**
1PH8163- . . B . . .	0.9	8.1	0.880	0.2160 (1.91)	196 (432)	gk863	30	**6SL3120-1TE23-0A■ .**
1PH8165- . . B . . .	0.88	14.5	0.900	0.2320 (2.05)	230 (507)	gk863	45	**6SL3120-1TE24-5AA .**
1PH8184- . . B . . .	0.81	26	0.895	0.489 (4.33)	350 (772)	1XB7322-P05	60	**6SL3120-1TE26-0AA .**
1PH8186- . . B . . .	0.77	39	0.904	0.652 (5.77)	422 (930)	1XB7322-P05	85	**6SL3120-1TE28-5AA .**
1PH8224- . . B . . .	0.84	37	0.923	1.48 (13.1)	610 (1345)	1XB7322-P05	85	**6SL3120-1TE28-5AA .**
1PH8226- . . B . . .	0.84	51	0.931	1.93 (17.1)	740 (1631)	1XB7322-P05	132	**6SL3120-1TE31-3AA .**
1PH8228- . . B . . .	0.83	63	0.935	2.33 (20.6)	870 (1918)	1XB7322-P05	132	**6SL3120-1TE31-3AA .**
1PH8284-1. B . . .	0.85	66	0.948	4.20 (37.2)	1200 (2646)	1XB7700-P02	200	**6SL3120-1TE32-0AA .**
1PH8286-1. B . . .	0.87	76	0.950	5.20 (46.0)	1400 (3086)	1XB7700-P02	200	**6SL3120-1TE32-0AA .**
1PH8288-1. B . . .	0.86	104	0.953	6.30 (55.8)	1650 (3638)	1XB7700-P02	260	**6SL3120-1TE32-6AA .**
1PH8184- . . C . . .	0.82	32	0.923	0.489 (4.33)	350 (772)	1XB7322-P05	85	**6SL3120-1TE28-5AA .**
1PH8186- . . C . . .	0.82	43	0.934	0.652 (5.77)	422 (930)	1XB7322-P05	85	**6SL3120-1TE28-5AA .**
1PH8224- . . C . . .	0.8	65	0.946	1.48 (13.1)	610 (1345)	1XB7322-P05	132	**6SL3120-1TE31-3AA .**
1PH8226- . . C . . .	0.8	83	0.951	1.93 (17.1)	740 (1631)	1XB7322-P05	200	**6SL3120-1TE32-0AA .**
1PH8228- . . C . . .	0.84	84	0.952	2.33 (20.6)	870 (1918)	1XB7322-P05	200	**6SL3120-1TE32-0AA .**
1PH8284-1. C . . .	0.84	102	0.959	4.20 (37.2)	1200 (2646)	1XB7700-P02	260	**6SL3120-1TE32-6AA .**
1PH8286-1. C . . .	0.85	120	0.962	5.20 (46.0)	1400 (3086)	1XB7700-P02	310	**6SL3320-1TE33-1AA .**
1PH8288-1. C . . .	0.83	168	0.963	6.30 (55.8)	1650 (3638)	1XB7700-P02	380	**6SL3320-1TE33-8AA .**
1PH8103- . . D . . .	0.81	4.6	0.850	0.0172 (0.15)	51 (112)	gk813	18	**6SL3120-■TE21-8A■ .**
1PH8107- . . D . . .	0.80	8.2	0.860	0.0289 (0.26)	73 (161)	gk813	18	**6SL3120-■TE21-8A■ .**
1PH8131- . . D . . .	0.85	8.0	0.910	0.0590 (0.52)	89 (196)	gk833	30	**6SL3120-1TE23-0A■ .**
1PH8133- . . D . . .	0.86	10.6	0.900	0.0760 (0.67)	106 (234)	gk833	30	**6SL3120-1TE23-0A■ .**
1PH8137- . . D . . .	0.86	15.9	0.890	0.1090 (0.96)	141 (311)	gk833	45	**6SL3120-1TE24-5AA .**
1PH8163- . . D . . .	0.88	17.5	0.930	0.2160 (1.91)	196 (432)	gk863	60	**6SL3120-1TE26-0AA .**
1PH8165- . . D . . .	0.88	22.5	0.930	0.2320 (2.05)	230 (507)	gk863	85	**6SL3120-1TE28-5AA .**
1PH8184- . . D . . .	0.81	42	0.940	0.489 (4.33)	350 (772)	1XB7322-P05	85	**6SL3120-1TE28-5AA .**
1PH8186- . . D . . .	0.82	56	0.943	0.652 (5.77)	422 (930)	1XB7322-P05	132	**6SL3120-1TE31-3AA .**
1PH8224- . . D . . .	0.78	79	0.953	1.48 (13.1)	610 (1345)	1XB7322-P05	200	**6SL3120-1TE32-0AA .**
1PH8226- . . D . . .	0.83	85	0.957	1.93 (17.1)	740 (1631)	1XB7322-P05	200	**6SL3120-1TE32-0AA .**
1PH8228- . . D . . .	0.85	96	0.960	2.33 (20.6)	870 (1918)	1XB7422-P06	260	**6SL3120-1TE32-6AA .**
1PH8284-1. D . . .	0.82	145	0.963	4.20 (37.2)	1200 (2646)	1XB7700-P02	310 [4]	**6SL3320-1TE33-1AA .**
1PH8286-1. D . . .	0.78	219	0.963	5.20 (46.0)	1400 (3086)	1XB7700-P02	490	**6SL3320-1TE35-0AA .**
1PH8288-1. D . . .	0.8	253	0.965	6.30 (55.8)	1650 (3638)	1XB7700-P02	490 [4]	**6SL3320-1TE35-0AA .**

Single Motor Module	**1**
Double Motor Module	**2**
Motor Module	
for continuous load with 200 % overload (C-type)	**C**
for highly dynamic, intermittent load cycles with 300 % overload (D-type)	**D**
Version status	

[1] n_2: Maximum permissible thermal speed at constant power.

[2] n_{max}: Maximum speed that must not be exceeded (applicable to Standard: 14th digit of article number A to H); for performance bearing (14th digit = "L"), the increased maximum speeds apply; limitations must be taken into consideration where necessary (e.g. with holding brake), see Article No. supplements.

[3] I_{rated}: Output current of the Motor Module at rated pulse frequency (see SINAMICS S120 drive system).
The rated motor data is valid for 4 kHz (SH 80 to 160) or 2 kHz (SH 180 to 280).

[4] The output current of the Motor Module is lower than the rated motor current for the pulse frequency on which it is based.

© Siemens AG 2017

Selection and ordering data

Rated speed	Shaft height	Rated power	Rated torque	Rated current	Rated voltage	Rated frequency	Operating speed during field weakening, max. [1]	Speed, max. [2]	**SIMOTICS M-1PH8 asynchronous motors Forced ventilation**
n_{rated}	SH	P_{rated}	M_{rated}	I_{rated}	U_{rated}	f_{rated}	n_2	n_{max}	
rpm		kW (hp)	Nm (lb_f-ft)	A	V	Hz	rpm	rpm	Article No.
Line voltage 480 V 3 AC, Active Line Module (continued)									
2200	80	4.1 (5.50)	18 (13.3)	7.6	480	76.2	6300	10000	**1PH8083-■■F■■-....**
		5.3 (7.11)	23 (17.0)	10	480	76.3	7100	10000	**1PH8087-■■F■■-....**
	100	5.1 (6.84)	22 (16.2)	12.5	363	76.0	7500	9000	**1PH8101-■■F■■-....**
		7.7 (10.3)	33 (24.3)	12.7	480	76.1	4100	9000	**1PH8103-■■F■■-....**
		9.9 (13.3)	43 (31.7)	17	485	75.3	7000	9000	**1PH8105-■■F■■-....**
		12.1 (16.2)	53 (39.1)	21.5	470	75.2	5500	9000	**1PH8107-■■F■■-....**
	132	16.5 (22.1)	72 (53.1)	24	500	75.0	5300	8000	**1PH8131-■■F■■-....**
		22 (29.5)	96 (70.8)	34	480	74.8	6200	8000	**1PH8133-■■F■■-....**
		26.4 (35.4)	115 (84.8)	43	468	74.7	6000	8000	**1PH8135-■■F■■-....**
		30 (40.2)	130 (95.9)	53	440	74.6	4500	8000	**1PH8137-■■F■■-....**
	160	40.7 (54.6)	177 (131)	68	456	74.2	3500	6500	**1PH8163-■■F■■-....**
		49.5 (66.4)	215 (159)	75	493	74.2	3500	6500	**1PH8165-■■F■■-....**
	180	68 (91.2)	295 (218)	110	500	73.8	5000	5000	**1PH8184-■■F■■-....**
		94 (126)	408 (301)	140	490	74.1	5000	5000	**1PH8186-■■F■■-....**
	225	110 (148)	478 (353)	168	500	73.7	2900	4500	**1PH8224-■■F■■-....**
		130 (174)	564 (416)	205	500	73.7	3100	4500	**1PH8226-■■F■■-....**
		170 (228)	738 (544)	275	500	73.6	3200	4500	**1PH8228-■■F■■-....**
	280	230 (308)	998 (736)	330	500	73.6	2400	3300	**1PH8284-1■F1■-....**
		279 (374)	1211 (893)	395	500	73.6	2400	3300	**1PH8286-1■F1■-....**
		347 (465)	1506 (1111)	495	500	73.6	2400	3300	**1PH8288-1■F1■-....**
2800	80	4.8 (6.44)	16 (11.8)	11.3	400	96.4	10000	10000	**1PH8083-■■G■■-....**
		6.3 (8.45)	21 (15.5)	13.5	425	96.5	10000	10000	**1PH8087-■■G■■-....**
	100	8.5 (11.4)	29 (21.4)	16	455	95.3	7000	9000	**1PH8103-■■G■■-....**
		13.7 (18.4)	47 (34.7)	24	480	95.1	7000	9000	**1PH8107-■■G■■-....**
	132	25 (33.5)	85 (62.7)	41	480	94.7	7000	8000	**1PH8133-■■G■■-....**
		26 (34.9)	89 (65.6)	47	440	94.6	6000	8000	**1PH8135-■■G■■-....**
		31 (41.6)	106 (78.2)	52	494	94.4	4000	8000	**1PH8137-■■G■■-....**
	160	42 (56.3)	143 (105)	75	447	94.1	3500	6500	**1PH8163-■■G■■-....**
		50 (67.1)	171 (126)	81	483	94.1	3500	6500	**1PH8165-■■G■■-....**
3900	80	5.3 (7.11)	13 (9.59)	14	372	132.8	10000	10000	**1PH8083-■■M■■-....**
		6.0 (8.05)	15 (11.1)	17.1	357	132.4	10000	10000	**1PH8087-■■M■■-....**
	100	10.8 (14.5)	26 (19.2)	25	383	132.1	9000	9000	**1PH8103-■■M■■-....**
		14.0 (18.8)	34 (25.1)	35	380	131.5	9000	9000	**1PH8107-■■M■■-....**

For versions, see Article No. supplements and options.

For footnotes, see next page.

© Siemens AG 2017

Motor type (repeated)	Power factor	Magne-tizing current	Efficiency	Moment of inertia without holding brake	Weight without hold-ing brake, approx.	Terminal box	SINAMICS S120 Motor Module: Rated output current [3]	SINAMICS S120 Motor Module: Internal air cooling For further components, see SINAMICS S120 drive system
	cos φ	I_μ	η	J			I_{rated}	
		A		kgm² (lbf-in-s²)	kg (lb)	Type	A	Article No.
1PH8083-..F...	0.82	3.6	0.850	0.0064 (0.06)	32 (70.5)	gk803	9	**6SL3120-■TE21-0AD.**
1PH8087-..F...	0.78	5.1	0.870	0.0089 (0.08)	39 (86)	gk803	18	**6SL3120-■TE21-8A■.**
1PH8101-..F...	0.82	6.0	0.870	0.0138 (0.12)	42 (92.6)	gk813	18	**6SL3120-■TE21-8A■.**
1PH8103-..F...	0.83	5.8	0.880	0.0172 (0.15)	51 (112)	gk813	18	**6SL3120-■TE21-8A■.**
1PH8105-..F...	0.79	8.7	0.900	0.0252 (0.22)	65 (143)	gk813	18	**6SL3120-■TE21-8A■.**
1PH8107-..F...	0.78	10.9	0.900	0.0289 (0.26)	73 (161)	gk813	30	**6SL3120-1TE23-0A■.**
1PH8131-..F...	0.87	10.0	0.920	0.0590 (0.52)	89 (196)	gk833	30	**6SL3120-1TE23-0A■.**
1PH8133-..F...	0.89	5.0	0.830	0.0760 (0.67)	106 (234)	gk833	45	**6SL3120-1TE24-5AA.**
1PH8135-..F...	0.84	18.3	0.920	0.0940 (0.83)	125 (276)	gk833	45	**6SL3120-1TE24-5AA.**
1PH8137-..F...	0.83	23.2	0.920	0.1090 (0.96)	141 (311)	gk833	60	**6SL3120-1TE26-0AA.**
1PH8163-..F...	0.88	24.5	0.940	0.2160 (1.91)	196 (432)	gk863	85	**6SL3120-1TE28-5AA.**
1PH8165-..F...	0.88	25.1	0.950	0.2320 (2.05)	230 (507)	gk863	85	**6SL3120-1TE28-5AA.**
1PH8184-..F...	0.75	68	0.948	0.489 (4.33)	350 (772)	1XB7322-P05	132	**6SL3120-1TE31-3AA.**
1PH8186-..F...	0.84	63	0.948	0.652 (5.77)	422 (930)	1XB7322-P05	200	**6SL3120-1TE32-0AA.**
1PH8224-..F...	0.79	90	0.957	1.48 (13.1)	610 (1345)	1XB7322-P05	200	**6SL3120-1TE32-0AA.**
1PH8226-..F...	0.76	123	0.958	1.93 (17.1)	740 (1631)	1XB7422-P06	310	**6SL3320-1TE33-1AA.**
1PH8228-..F...	0.74	174	0.959	2.33 (20.6)	870 (1918)	1XB7700-P02	380	**6SL3320-1TE33-8AA.**
1PH8284-1.F...	0.83	163	0.963	4.20 (37.2)	1200 (2646)	1XB7700-P02	490	**6SL3320-1TE35-0AA.**
1PH8286-1.F...	0.85	183	0.965	5.20 (46.0)	1400 (3086)	1XB7700-P02	490	**6SL3320-1TE35-0AA.**
1PH8288-1.F...	0.84	233	0.966	6.30 (55.8)	1650 (3638)	1XB7712-P03	745	**6SL3320-1TE37-5AA.**
1PH8083-..G...	0.76	5.8	0.868	0.0064 (0.06)	32 (70.5)	gk803	18	**6SL3120-■TE21-8A■.**
1PH8087-..G...	0.77	6.8	0.870	0.0089 (0.08)	39 (86)	gk803	18	**6SL3120-■TE21-8A■.**
1PH8103-..G...	0.78	8.1	0.900	0.0172 (0.15)	51 (112)	gk813	18	**6SL3120-■TE21-8A■.**
1PH8107-..G...	0.77	12.8	0.920	0.0289 (0.26)	73 (161)	gk813	30	**6SL3120-1TE23-0A■.**
1PH8133-..G...	0.83	18.1	0.920	0.0760 (0.67)	106 (234)	gk833	45	**6SL3120-1TE24-5AA.**
1PH8135-..G...	0.84	20.0	0.924	0.0940 (0.83)	125 (276)	gk833	60	**6SL3120-1TE26-0AA.**
1PH8137-..G...	0.82	22.0	0.920	0.1090 (0.96)	141 (311)	gk833	60	**6SL3120-1TE26-0AA.**
1PH8163-..G...	0.85	28.1	0.930	0.2160 (1.91)	196 (432)	gk863	85	**6SL3120-1TE28-5AA.**
1PH8165-..G...	0.87	31.9	0.940	0.2320 (2.05)	230 (507)	gk863	85	**6SL3120-1TE28-5AA.**
1PH8083-..M...	0.76	7.2	0.870	0.0064 (0.06)	32 (70.5)	gk803	18	**6SL3120-■TE21-8A■.**
1PH8087-..M...	0.73	9.2	0.890	0.0089 (0.08)	39 (86.0)	gk803	18	**6SL3120-■TE21-8A■.**
1PH8103-..M...	0.77	12.2	0.900	0.0172 (0.15)	51 (112)	gk813	30	**6SL3120-1TE23-0A■.**
1PH8107-..M...	0.73	19.4	0.900	0.0289 (0.26)	73 (161)	gk813	45	**6SL3120-1TE24-5AA.**

Single Motor Module	**1**
Double Motor Module	**2**
Motor Module	
for continuous load with 200 % overload (C-type)	**C**
for highly dynamic, intermittent load cycles with 300 % overload (D-type)	**D**
Version status	

[1] n_2: Maximum permissible thermal speed at constant power.

[2] n_{max}: Maximum speed that must not be exceeded (applicable to Standard: 14th digit of article number A to H); for performance bearing (14th digit = "L"), the increased maximum speeds apply; limitations must be taken into consideration where necessary (e.g. with holding brake), see Article No. supplements.

[3] I_{rated}: Output current of the Motor Module at rated pulse frequency (see SINAMICS S120 drive system).
The rated motor data is valid for 4 kHz (SH 80 to 160) or 2 kHz (SH 180 to 280).

© Siemens AG 2017

Selection and ordering data

Rated speed	Shaft height	Rated power	Rated torque	Rated current	Rated voltage	Rated frequency	Operating speed during field weakening, max. [1]	Speed, max. [2]	**SIMOTICS M-1PH8 asynchronous motors Forced ventilation**
n_{rated}	SH	P_{rated}	M_{rated}	I_{rated}	U_{rated}	f_{rated}	n_2	n_{max}	
rpm		kW (hp)	Nm (lb_f-ft)	A	V	Hz	rpm	rpm	Article No.
Line voltage 690 V 3 AC, Basic Line Module									
400	280	61 (81.8)	1456 (1074)	82	555	13.7	1100	3300	**1PH8284-1■H1■-....**
		77 (103)	1838 (1356)	100	555	13.7	1200	3300	**1PH8286-1■H1■-....**
		100 (134)	2388 (1761)	130	555	13.7	1300	3300	**1PH8288-1■H1■-....**
700	280	100 (134)	1364 (1006)	118	605	23.7	2100	3300	**1PH8284-1■K1■-....**
		127 (170)	1733 (1278)	158	605	23.6	2100	3300	**1PH8286-1■K1■-....**
		162 (217)	2210 (1630)	186	605	23.7	2100	3300	**1PH8288-1■K1■-....**
1000	280	143 (192)	1366 (1008)	176	600	33.6	2100	3300	**1PH8284-1■U1■-....**
		176 (236)	1681 (1240)	230	570	33.6	2100	3300	**1PH8286-1■U1■-....**
		218 (292)	2082 (1536)	275	580	33.6	2100	3300	**1PH8288-1■U1■-....**
1500	280	186 (249)	1184 (873)	220	590	50.3	1900	3300	**1PH8284-1■W1■-....**
		224 (300)	1426 (1052)	260	590	50.3	2000	3300	**1PH8286-1■W1■-....**
		282 (378)	1795 (1324)	325	590	50.3	2100	3300	**1PH8288-1■W1■-....**
Line voltage 690 V 3 AC, Active Line Module									
500	280	77 (103)	1471 (1085)	82	690	17.0	1600	3300	**1PH8284-1■H1■-....**
		96 (129)	1834 (1353)	100	690	17.0	1600	3300	**1PH8286-1■H1■-....**
		125 (168)	2388 (1761)	128	690	17.0	1600	3300	**1PH8288-1■H1■-....**
800	280	115 (154)	1373 (1013)	120	690	27.0	2300	3300	**1PH8284-1■K1■-....**
		145 (194)	1731 (1277)	158	690	26.9	2300	3300	**1PH8286-1■K1■-....**
		185 (248)	2208 (1629)	184	690	27.0	2300	3300	**1PH8288-1■K1■-....**
1150	280	164 (220)	1362 (1005)	174	690	38.6	2200	3300	**1PH8284-1■U1■-....**
		203 (272)	1686 (1244)	230	655	38.6	2200	3300	**1PH8286-1■U1■-....**
		251 (337)	2084 (1537)	275	665	38.6	2200	3300	**1PH8288-1■U1■-....**
1750	280	217 (291)	1184 (873)	220	690	58.7	2200	3300	**1PH8284-1■W1■-....**
		261 (350)	1424 (1050)	260	690	58.7	2200	3300	**1PH8286-1■W1■-....**
		329 (441)	1795 (1324)	325	690	58.7	2200	3300	**1PH8288-1■W1■-....**

For versions, see Article No. supplements and options.

For footnotes, see next page.

© Siemens AG 2017

Motor type (repeated)	Power factor	Magne-tizing current	Efficiency	Moment of inertia	Weight, approx.	Terminal box	SINAMICS S120 Motor Module	
							Rated output current [3]	Internal air cooling For further components, see SINAMICS S120 drive system
	cos φ	I_μ	η	J			I_{rated}	
		A		kgm² (lb$_f$-in-s²)	kg (lb)	Type	A	Article No.
1PH8284-1.H...	0.84	39	0.920	4.20 (37.2)	1200 (2646)	1XB7700-P02	100	**6SL3320-1TG31-0AA.**
1PH8286-1.H...	0.87	43	0.921	5.20 (46.0)	1400 (3086)	1XB7700-P02	120	**6SL3320-1TG31-2AA.**
1PH8288-1.H...	0.87	55	0.924	6.30 (55.8)	1650 (3638)	1XB7700-P02	150	**6SL3320-1TG31-5AA.**
1PH8284-1.K...	0.85	53	0.945	4.20 (37.2)	1200 (2646)	1XB7700-P02	150	**6SL3320-1TG31-5AA.**
1PH8286-1.K...	0.81	83	0.951	5.20 (46.0)	1400 (3086)	1XB7700-P02	175	**6SL3320-1TG31-8AA.**
1PH8288-1.K...	0.88	75	0.949	6.30 (55.8)	1650 (3638)	1XB7700-P02	215	**6SL3320-1TG32-2AA.**
1PH8284-1.U...	0.82	89	0.956	4.20 (37.2)	1200 (2646)	1XB7700-P02	215	**6SL3320-1TG32-2AA.**
1PH8286-1.U...	0.81	124	0.959	5.20 (46.0)	1400 (3086)	1XB7700-P02	260	**6SL3320-1TG32-6AA.**
1PH8288-1.U...	0.82	145	0.961	6.30 (55.8)	1650 (3638)	1XB7700-P02	330	**6SL3320-1TG33-3AA.**
1PH8284-1.W...	0.86	92	0.962	4.20 (37.2)	1200 (2646)	1XB7700-P02	260	**6SL3320-1TG32-6AA.**
1PH8286-1.W...	0.88	104	0.965	5.20 (46.0)	1400 (3086)	1XB7700-P02	330	**6SL3320-1TG33-3AA.**
1PH8288-1.W...	0.88	133	0.966	6.30 (55.8)	1650 (3638)	1XB7700-P02	410	**6SL3320-1TG34-1AA.**
1PH8284-1.H...	0.84	39	0.932	4.20 (37.2)	1200 (2646)	1XB7700-P02	100	**6SL3320-1TG31-0AA.**
1PH8286-1.H...	0.86	43	0.934	5.20 (46.0)	1400 (3086)	1XB7700-P02	120	**6SL3320-1TG31-2AA.**
1PH8288-1.H...	0.87	56	0.937	6.30 (55.8)	1650 (3638)	1XB7700-P02	150	**6SL3320-1TG31-5AA.**
1PH8284-1.K...	0.85	53	0.950	4.20 (37.2)	1200 (2646)	1XB7700-P02	150	**6SL3320-1TG31-5AA.**
1PH8286-1.K...	0.81	83	0.954	5.20 (46.0)	1400 (3086)	1XB7700-P02	175	**6SL3320-1TG31-8AA.**
1PH8288-1.K...	0.88	76	0.953	6.30 (55.8)	1650 (3638)	1XB7700-P02	215	**6SL3320-1TG32-2AA.**
1PH8284-1.U...	0.82	90	0.959	4.20 (37.2)	1200 (2646)	1XB7700-P02	215	**6SL3320-1TG32-2AA.**
1PH8286-1.U...	0.81	124	0.961	5.20 (46.0)	1400 (3086)	1XB7700-P02	260	**6SL3320-1TG32-6AA.**
1PH8288-1.U...	0.82	145	0.963	6.30 (55.8)	1650 (3638)	1XB7700-P02	330	**6SL3320-1TG33-3AA.**
1PH8284-1.W...	0.86	93	0.963	4.20 (37.2)	1200 (2646)	1XB7700-P02	260	**6SL3320-1TG32-6AA.**
1PH8286-1.W...	0.87	105	0.966	5.20 (46.0)	1400 (3086)	1XB7700-P02	330	**6SL3320-1TG33-3AA.**
1PH8288-1.W...	0.87	134	0.967	6.30 (55.8)	1650 (3638)	1XB7700-P02	410	**6SL3320-1TG34-1AA.**
						Version status		

[1] n_2: Maximum permissible thermal speed at constant power.
[2] n_{max}: Maximum speed that must not be exceeded.
[3] I_{rated}: Output current of the Motor Module at rated pulse frequency (see SINAMICS S120 drive system).
The rated motor data is valid for 2 kHz (SH 180 to 280).

© Siemens AG 2017

Selection and ordering data

Rated speed	Shaft height	Rated power	Rated torque	Rated current	Rated voltage	Rated frequency	Operating speed during field weakening, max. [1]	Speed, max. [2]	SIMOTICS M-1PH8 asynchronous motors Forced ventilation
n_{rated}	SH	P_{rated}	M_{rated}	I_{rated}	U_{rated}	f_{rated}	n_2	n_{max}	
rpm		kW (hp)	Nm (lb_f-ft)	A	V	Hz	rpm	rpm	Article No.
Line voltage 400 V 3 AC, Smart/Basic Line Module									
400	180	24.5 (32.9)	585 (431)	67	300	14.3	1900	5000	**1PH8184-■■B■■-....**
		31.5 (42.2)	752 (555)	88	290	14.2	2100	5000	**1PH8186-■■B■■-....**
	225	45 (60.3)	1074 (792)	114	300	14.1	1800	4500	**1PH8224-■■B■■-....**
		57 (76.4)	1361 (1004)	144	305	13.9	2100	4500	**1PH8226-■■B■■-....**
		72 (96.6)	1719 (1268)	176	305	14.0	2200	4500	**1PH8228-■■B■■-....**
700	180	40 (53.6)	546 (403)	94	320	24.5	2200	5000	**1PH8184-■■C■■-....**
		52 (69.7)	709 (523)	116	330	24.3	2400	5000	**1PH8186-■■C■■-....**
	225	80 (107)	1091 (805)	188	310	24.1	2200	4500	**1PH8224-■■C■■-....**
		106 (142)	1446 (1067)	240	310	24.2	2200	4500	**1PH8226-■■C■■-....**
		120 (161)	1637 (1207)	265	315	24.1	2300	4500	**1PH8228-■■C■■-....**
	280	171 (229)	2333 (1721)	355	330	23.9	1200	3300	**1PH8284-1■C4■-....**
		219 (294)	2988 (2204)	455	325	23.9	1300	3300	**1PH8286-1■C4■-....**
		272 (365)	3711 (2737)	570	325	23.9	1400	3300	**1PH8288-1■C4■-....**
1000	180	57 (76.4)	544 (401)	120	340	34.4	2800	5000	**1PH8184-■■D■■-....**
		74 (99.2)	707 (521)	156	340	34.3	3000	5000	**1PH8186-■■D■■-....**
	225	105 (141)	1003 (740)	220	335	34.1	2700	4500	**1PH8224-■■D■■-....**
		135 (181)	1289 (951)	275	340	34.1	2700	4500	**1PH8226-■■D■■-....**
		165 (221)	1576 (1162)	330	340	34.1	2700	4500	**1PH8228-■■D■■-....**
	280	243 (326)	2321 (1712)	490	335	33.9	1900	3300	**1PH8284-1■D4■-....**
		309 (414)	2951 (2177)	630	330	33.8	2000	3300	**1PH8286-1■D4■-....**
		379 (508)	3619 (2669)	760	335	33.8	2100	3300	**1PH8288-1■D4■-....**
1500	180	76 (102)	484 (357)	162	335	50.9	4300	5000	**1PH8184-■■F■■-....**
		108 (145)	688 (507)	225	330	50.9	4300	5000	**1PH8186-■■F■■-....**
	225	142 (190)	904 (667)	290	340	50.8	3000	4500	**1PH8224-■■F■■-....**
		175 (235)	1114 (822)	350	340	50.7	3000	4500	**1PH8226-■■F■■-....**
		230 (308)	1464 (1080)	465	340	50.6	3000	4500	**1PH8228-■■F■■-....**
	280	319 (428)	2031 (1498)	620	345	50.6	1900	3300	**1PH8284-1■F4■-....**
		382 (512)	2432 (1794)	730	345	50.6	2000	3300	**1PH8286-1■F4■-....**
		480 (644)	3056 (2254)	910	345	50.6	2100	3300	**1PH8288-1■F4■-....**
2500	180	100 (134)	382 (282)	205	340	84.2	5000	5000	**1PH8184-■■L■■-....**
		130 (174)	497 (367)	270	335	84.1	5000	5000	**1PH8186-■■L■■-....**
	225	178 (239)	680 (502)	355	340	84.1	3500	4500	**1PH8224-■■L■■-....**
		235 (315)	898 (662)	475	335	84.0	3500	4500	**1PH8226-■■L■■-....**
		265 (355)	1012 (746)	530	340	83.9	3500	4500	**1PH8228-■■L■■-....**

For versions, see Article No. supplements and options.

For footnotes, see next page.

© Siemens AG 2017

Motor type (repeated)	Power factor	Magnetizing current	Efficiency	Moment of inertia	Weight without holding brake, approx.	Terminal box	SINAMICS S120 Motor Module: Rated output current [3]	SINAMICS S120 Motor Module: Internal air cooling For further components, see SINAMICS S120 drive system
	cos φ	I_μ	η	J			I_{rated}	
		A		kgm² (lbf-in-s²)	kg (lb)	Type	A	Article No.
1PH8184- . . B . . .	0.88	25	0.801	0.489 (4.33)	350 (772)	1XB7322-P05	85	**6SL3120-1TE28-5AA.**
1PH8186- . . B . . .	0.87	37	0.822	0.652 (5.77)	422 (930)	1XB7322-P05	85 [4]	**6SL3120-1TE28-5AA.**
1PH8224- . . B . . .	0.89	39	0.849	1.48 (13.1)	610 (1345)	1XB7322-P05	132	**6SL3120-1TE31-3AA.**
1PH8226- . . B . . .	0.86	61	0.875	1.93 (17.1)	740 (1631)	1XB7322-P05	200	**6SL3120-1TE32-0AA.**
1PH8228- . . B . . .	0.88	69	0.878	2.33 (20.6)	870 (1918)	1XB7322-P05	200	**6SL3120-1TE32-0AA.**
1PH8184- . . C . . .	0.90	27	0.852	0.489 (4.33)	350 (772)	1XB7322-P05	132	**6SL3120-1TE31-3AA.**
1PH8186- . . C . . .	0.89	41	0.885	0.652 (5.77)	422 (930)	1XB7322-P05	132	**6SL3120-1TE31-3AA.**
1PH8224- . . C . . .	0.88	63	0.904	1.48 (13.1)	610 (1345)	1XB7322-P05	200	**6SL3120-1TE32-0AA.**
1PH8226- . . C . . .	0.90	71	0.907	1.93 (17.1)	740 (1631)	1XB7422-P06	260	**6SL3320-1TE32-6AA.**
1PH8228- . . C . . .	0.91	75	0.911	2.33 (20.6)	870 (1918)	1XB7422-P06	260 [4]	**6SL3320-1TE32-6AA.**
1PH8284-1. C . . .	0.91	101	0.930	4.20 (37.2)	1200 (2646)	1XB7700-P02	380	**6SL3320-1TE33-8AA.**
1PH8286-1. C . . .	0.92	115	0.931	5.20 (46.0)	1400 (3086)	1XB7700-P02	490	**6SL3320-1TE35-0AA.**
1PH8288-1. C . . .	0.91	161	0.939	6.30 (55.8)	1650 (3638)	1XB7700-P02	745	**6SL3320-1TE37-5AA.**
1PH8184- . . D . . .	0.89	39	0.899	0.489 (4.33)	350 (772)	1XB7322-P05	132	**6SL3120-1TE31-3AA.**
1PH8186- . . D . . .	0.89	53	0.908	0.652 (5.77)	422 (930)	1XB7322-P05	200	**6SL3120-1TE32-0AA.**
1PH8224- . . D . . .	0.88	73	0.926	1.48 (13.1)	610 (1345)	1XB7422-P06	260	**6SL3320-1TE32-6AA.**
1PH8226- . . D . . .	0.90	82	0.929	1.93 (17.1)	740 (1631)	1XB7700-P02	310	**6SL3320-1TE33-1AA.**
1PH8228- . . D . . .	0.91	93	0.933	2.33 (20.6)	870 (1918)	1XB7700-P02	380	**6SL3320-1TE33-8AA.**
1PH8284-1. D . . .	0.90	137	0.947	4.20 (37.2)	1200 (2646)	1XB7700-P02	490	**6SL3320-1TE35-0AA.**
1PH8286-1. D . . .	0.90	207	0.952	5.20 (46.0)	1400 (3086)	1XB7700-P02	840	**6SL3320-1TE38-4AA.**
1PH8288-1. D . . .	0.90	242	0.955	6.30 (55.8)	1650 (3638)	1XB7712-P03	985	**6SL3320-1TE41-0AA.**
1PH8184- . . F . . .	0.87	61	0.931	0.489 (4.33)	350 (772)	1XB7322-P05	200	**6SL3120-1TE32-0AA.**
1PH8186- . . F . . .	0.89	79	0.936	0.652 (5.77)	422 (930)	1XB7422-P06	260	**6SL3320-1TE32-6AA.**
1PH8224- . . F . . .	0.89	84	0.942	1.48 (13.1)	610 (1345)	1XB7700-P02	310	**6SL3320-1TE33-1AA.**
1PH8226- . . F . . .	0.89	117	0.950	1.93 (17.1)	740 (1631)	1XB7700-P02	380	**6SL3320-1TE33-8AA.**
1PH8228- . . F . . .	0.88	166	0.953	2.33 (20.6)	870 (1918)	1XB7700-P02	490	**6SL3320-1TE35-0AA.**
1PH8284-1. F . . .	0.91	157	0.957	4.20 (37.2)	1200 (2646)	1XB7700-P02	745 [4]	**6SL3320-1TE37-5AA.**
1PH8286-1. F . . .	0.92	177	0.959	5.20 (46.0)	1400 (3086)	1XB7712-P03	840	**6SL3320-1TE38-4AA.**
1PH8288-1. F . . .	0.92	229	0.961	6.30 (55.8)	1650 (3638)	1XB7712-P03	985 [4]	**6SL3320-1TE41-0AA.**
1PH8184- . . L . . .	0.87	74	0.949	0.489 (4.33)	350 (772)	1XB7322-P05	210	**6SL3320-1TE32-1AA.**
1PH8186- . . L . . .	0.87	105	0.954	0.652 (5.77)	422 (930)	1XB7422-P06	310	**6SL3320-1TE33-1AA.**
1PH8224- . . L . . .	0.89	112	0.954	1.48 (13.1)	610 (1345)	1XB7700-P02	380	**6SL3320-1TE33-8AA.**
1PH8226- . . L . . .	0.89	149	0.957	1.93 (17.1)	740 (1631)	1XB7700-P02	490	**6SL3320-1TE35-0AA.**
1PH8228- . . L . . .	0.89	180	0.960	2.33 (20.6)	870 (1918)	1XB7700-P02	745	**6SL3320-1TE37-5AA.**
						Version status		

[1] n_2: Maximum permissible thermal speed at constant power.

[2] n_{max}: Maximum speed that must not be exceeded (applicable to Standard: 14th digit of article number A to F); limitations must be taken into consideration where applicable (e.g. with holding brake), see Article No. supplements.

[3] I_{rated}: Output current of the Motor Module at rated pulse frequency (see SINAMICS S120 drive system).
The rated motor data is valid for 2 kHz (SH 180 to 280).

[4] The output current of the Motor Module is lower than the rated motor current for the pulse frequency on which it is based.

© Siemens AG 2017

Selection and ordering data

Rated speed	Shaft height	Rated power	Rated torque	Rated current	Rated voltage	Rated frequency	Operating speed during field weakening, max. [1]	Speed, max. [2]	SIMOTICS M-1PH8 asynchronous motors Forced ventilation
n_{rated}	SH	P_{rated}	M_{rated}	I_{rated}	U_{rated}	f_{rated}	n_2	n_{max}	
rpm		kW (hp)	Nm (lb_f-ft)	A	V	Hz	rpm	rpm	Article No.
Line voltage 400 V 3 AC, Active Line Module									
500	180	30 (40.2)	573 (423)	65	370	17.6	2000	5000	**1PH8184-■■ B ■■-....**
		40 (53.6)	764 (563)	88	355	17.5	2200	5000	**1PH8186-■■ B ■■-....**
	225	55 (73.8)	1051 (775)	112	370	17.4	1800	4500	**1PH8224-■■ B ■■-....**
		72 (96.6)	1375 (1014)	144	375	17.3	2200	4500	**1PH8226-■■ B ■■-....**
		90 (121)	1719 (1268)	174	380	17.3	2200	4500	**1PH8228-■■ B ■■-....**
800	180	45 (60.3)	537 (396)	91	365	27.8	2300	5000	**1PH8184-■■ C ■■-....**
		60 (80.5)	716 (528)	120	360	27.7	2500	5000	**1PH8186-■■ C ■■-....**
	225	90 (121)	1074 (792)	184	350	27.4	2300	4500	**1PH8224-■■ C ■■-....**
		118 (158)	1409 (1039)	235	350	27.5	2300	4500	**1PH8226-■■ C ■■-....**
		135(181)	1612 (1189)	260	360	27.4	2400	4500	**1PH8228-■■ C ■■-....**
	280	195 (261)	2328 (1717)	335	400	27.2	1350	3300	**1PH8284-1■ C 4■-....**
		250 (335)	2984 (2201)	435	385	27.2	1500	3300	**1PH8286-1■ C 4■-....**
		310 (416)	3701 (2730)	560	370	27.2	1550	3300	**1PH8288-1■ C 4■-....**
1150	180	65 (87.2)	540 (398)	120	390	39.4	3000	5000	**1PH8184-■■ D ■■-....**
		85 (114)	706 (521)	154	390	39.3	3200	5000	**1PH8186-■■ D ■■-....**
	225	120 (161)	997 (735)	220	385	39.1	2900	4500	**1PH8224-■■ D ■■-....**
		155 (208)	1287 (949)	270	390	39.1	2800	4500	**1PH8226-■■ D ■■-....**
		190 (255)	1578 (1164)	330	390	39.1	2800	4500	**1PH8228-■■ D ■■-....**
	280	280 (375)	2325 (1715)	475	400	38.9	2200	3300	**1PH8284-1■ D 4■-....**
		355 (476)	2944 (2171)	630	380	38.8	2200	3300	**1PH8286-1■ D 4■-....**
		435 (583)	3607 (2660)	760	385	38.8	2200	3300	**1PH8288-1■ D 4■-....**
1750	180	89 (119)	486 (358)	162	390	59.3	4300	5000	**1PH8184-■■ F ■■-....**
		125 (168)	682 (503)	225	385	59.2	4300	5000	**1PH8186-■■ F ■■-....**
	225	165 (221)	900 (664)	285	395	59.2	2900	4500	**1PH8224-■■ F ■■-....**
		200 (268)	1091 (805)	350	390	59.0	2900	4500	**1PH8226-■■ F ■■-....**
		265 (355)	1446 (1067)	460	390	59.0	2900	4500	**1PH8228-■■ F ■■-....**
	280	370 (496)	2019 (1489)	610	400	58.9	2200	3300	**1PH8284-1■ F 4■-....**
		445 (597)	2429 (1792)	730	400	58.9	2200	3300	**1PH8286-1■ F 4■-....**
		560 (751)	3055 (2253)	910	400	58.9	2200	3300	**1PH8288-1■ F 4■-....**
2900	180	113 (152)	372 (274)	200	395	97.5	5000	5000	**1PH8184-■■ L ■■-....**
		150 (201)	494 (364)	270	385	97.4	5000	5000	**1PH8186-■■ L ■■-....**
	225	205 (275)	675 (498)	355	395	97.4	3500	4500	**1PH8224-■■ L ■■-....**
		270 (362)	889 (656)	470	390	97.3	3500	4500	**1PH8226-■■ L ■■-....**
		300 (402)	988 (729)	510	395	97.3	3500	4500	**1PH8228-■■ L ■■-....**

For versions, see Article No. supplements and options.

For footnotes, see next page.

© Siemens AG 2017

Motor type (repeated)	Power factor	Magnetizing current	Efficiency	Moment of inertia	Weight without holding brake, approx.	Terminal box	SINAMICS S120 Motor Module: Rated output current [3]	SINAMICS S120 Motor Module: Internal air cooling For further components, see SINAMICS S120 drive system
	cos φ	I_μ	η	J			I_{rated}	
		A		kgm² (lbf-in-s²)	kg (lb)	Type	A	Article No.
1PH8184- . . B . . .	0.86	27	0.840	0.489 (4.33)	350 (772)	1XB7322-P05	85	**6SL3120-1TE28-5AA.**
1PH8186- . . B . . .	0.87	38	0.850	0.652 (5.77)	422 (930)	1XB7322-P05	85 [4]	**6SL3120-1TE28-5AA.**
1PH8224- . . B . . .	0.88	41	0.878	1.48 (13.1)	610 (1345)	1XB7322-P05	132	**6SL3120-1TE31-3AA.**
1PH8226- . . B . . .	0.86	60	0.895	1.93 (17.1)	740 (1631)	1XB7322-P05	200	**6SL3120-1TE32-0AA.**
1PH8228- . . B . . .	0.87	73	0.899	2.33 (20.6)	870 (1918)	1XB7322-P05	200	**6SL3120-1TE32-0AA.**
1PH8184- . . C . . .	0.90	28	0.872	0.489 (4.33)	350 (772)	1XB7322-P05	132	**6SL3120-1TE31-3AA.**
1PH8186- . . C . . .	0.90	38	0.891	0.652 (5.77)	422 (930)	1XB7322-P05	132	**6SL3120-1TE31-3AA.**
1PH8224- . . C . . .	0.88	63	0.914	1.48 (13.1)	610 (1345)	1XB7322-P05	200	**6SL3120-1TE32-0AA.**
1PH8226- . . C . . .	0.90	71	0.918	1.93 (17.1)	740 (1631)	1XB7422-P06	260	**6SL3320-1TE32-6AA.**
1PH8228- . . C . . .	0.91	77	0.922	2.33 (20.6)	870 (1918)	1XB7422-P06	260	**6SL3320-1TE32-6AA.**
1PH8284-1. C . . .	0.89	117	0.942	4.20 (37.2)	1200 (2646)	1XB7700-P02	380	**6SL3320-1TE33-8AA.**
1PH8286-1. C . . .	0.91	126	0.942	5.20 (46.0)	1400 (3086)	1XB7700-P02	490	**6SL3320-1TE35-0AA.**
1PH8288-1. C . . .	0.91	164	0.945	6.30 (55.8)	1650 (3638)	1XB7700-P02	745	**6SL3320-1TE37-5AA.**
1PH8184- . . D . . .	0.88	39	0.911	0.489 (4.33)	350 (772)	1XB7322-P05	132	**6SL3120-1TE31-3AA.**
1PH8186- . . D . . .	0.89	54	0.918	0.652 (5.77)	422 (930)	1XB7322-P05	200	**6SL3120-1TE32-0AA.**
1PH8224- . . D . . .	0.88	74	0.934	1.48 (13.1)	610 (1345)	1XB7422-P06	260	**6SL3320-1TE32-6AA.**
1PH8226- . . D . . .	0.90	83	0.936	1.93 (17.1)	740 (1631)	1XB7700-P02	310	**6SL3320-1TE33-1AA.**
1PH8228- . . D . . .	0.91	94	0.940	2.33 (20.6)	870 (1918)	1XB7700-P02	380	**6SL3320-1TE33-8AA.**
1PH8284-1. D . . .	0.89	150	0.953	4.20 (37.2)	1200 (2646)	1XB7700-P02	490	**6SL3320-1TE35-0AA.**
1PH8286-1. D . . .	0.89	209	0.956	5.20 (46.0)	1400 (3086)	1XB7700-P02	840	**6SL3320-1TE38-4AA.**
1PH8288-1. D . . .	0.90	244	0.958	6.30 (55.8)	1650 (3638)	1XB7712-P03	985	**6SL3320-1TE41-0AA.**
1PH8184- . . F . . .	0.87	61	0.937	0.489 (4.33)	350 (772)	1XB7322-P05	200	**6SL3120-1TE32-0AA.**
1PH8186- . . F . . .	0.88	80	0.942	0.652 (5.77)	422 (930)	1XB7422-P06	260	**6SL3320-1TE32-6AA.**
1PH8224- . . F . . .	0.89	84	0.946	1.48 (13.1)	610 (1345)	1XB7700-P02	310	**6SL3320-1TE33-1AA.**
1PH8226- . . F . . .	0.89	114	0.954	1.93 (17.1)	740 (1631)	1XB7700-P02	380	**6SL3320-1TE33-8AA.**
1PH8228- . . F . . .	0.89	162	0.956	2.33 (20.6)	870 (1918)	1XB7700-P02	490	**6SL3320-1TE35-0AA.**
1PH8284-1. F . . .	0.91	158	0.960	4.20 (37.2)	1200 (2646)	1XB7700-P02	745	**6SL3320-1TE37-5AA.**
1PH8286-1. F . . .	0.92	178	0.962	5.20 (46.0)	1400 (3086)	1XB7712-P03	840	**6SL3320-1TE38-4AA.**
1PH8288-1. F . . .	0.92	228	0.963	6.30 (55.8)	1650 (3638)	1XB7712-P03	985 [4]	**6SL3320-1TE41-0AA.**
1PH8184- . . L . . .	0.87	75	0.952	0.489 (4.33)	350 (772)	1XB7322-P05	210	**6SL3320-1TE32-1AA.**
1PH8186- . . L . . .	0.87	105	0.955	0.652 (5.77)	422 (930)	1XB7422-P06	310	**6SL3320-1TE33-1AA.**
1PH8224- . . L . . .	0.89	113	0.955	1.48 (13.1)	610 (1345)	1XB7700-P02	380	**6SL3320-1TE33-8AA.**
1PH8226- . . L . . .	0.89	150	0.958	1.93 (17.1)	740 (1631)	1XB7700-P02	490	**6SL3320-1TE35-0AA.**
1PH8228- . . L . . .	0.89	182	0.960	2.33 (20.6)	870 (1918)	1XB7700-P02	745	**6SL3320-1TE37-5AA.**
						Version status		

[1] n_2: Maximum permissible thermal speed at constant power.

[2] n_{max}: Maximum speed that must not be exceeded (applicable to Standard: 14th digit of article number A to F); limitations must be taken into consideration where applicable (e.g. with holding brake), see Article No. supplements.

[3] I_{rated}: Output current of the Motor Module at rated pulse frequency (see SINAMICS S120 drive system).
The rated motor data is valid for 2 kHz (SH 180 to 280).

[4] The output current of the Motor Module is lower than the rated motor current for the pulse frequency on which it is based.

© Siemens AG 2017

Selection and ordering data

Rated speed	Shaft height	Rated power	Rated torque	Rated current	Rated voltage	Rated frequency	Operating speed during field weakening, max. [1]	Speed, max. [2]	SIMOTICS M-1PH8 asynchronous motors Forced ventilation
n_{rated}	SH	P_{rated}	M_{rated}	I_{rated}	U_{rated}	f_{rated}	n_2	n_{max}	
rpm		kW (hp)	Nm (lb_f-ft)	A	V	Hz	rpm	rpm	Article No.
Line voltage 480 V 3 AC, Smart/Basic Line Module									
600	180	36 (48.3)	573 (423)	64	440	20.9	2100	5000	**1PH8184-■■B■■-....**
		48 (64.4)	764 (563)	88	430	20.8	2300	5000	**1PH8186-■■B■■-....**
	225	67 (39.8)	1066 (786)	118	410	20.9	1800	4500	**1PH8224-■■B■■-....**
		87 (117)	1385 (1022)	152	410	20.8	2300	4500	**1PH8226-■■B■■-....**
		108 (145)	1719 (1268)	188	410	20.8	2200	4500	**1PH8228-■■B■■-....**
1000	180	57 (76.4)	544 (401)	90	460	34.4	2400	5000	**1PH8184-■■C■■-....**
		74 (99.2)	707 (521)	116	450	34.3	2600	5000	**1PH8186-■■C■■-....**
	225	105 (141)	1003 (740)	174	425	34.1	2300	4500	**1PH8224-■■C■■-....**
		146 (196)	1394 (1028)	230	440	34.1	2300	4500	**1PH8226-■■C■■-....**
		165 (221)	1576 (1162)	250	450	34.1	2400	4500	**1PH8228-■■C■■-....**
	280	235 (315)	2244 (1655)	345	455	33.9	1700	3300	**1PH8284-1■C4■-....**
		310 (416)	2961 (2184)	450	460	33.9	2000	3300	**1PH8286-1■C4■-....**
		385 (516)	3677 (2712)	560	460	33.9	2050	3300	**1PH8288-1■C4■-....**
1350	180	74 (99.2)	523 (386)	118	450	46.0	3100	5000	**1PH8184-■■D■■-....**
		98 (131)	693 (511)	152	450	45.9	3300	5000	**1PH8186-■■D■■-....**
	225	137 (184)	969 (715)	215	450	45.7	3000	4500	**1PH8224-■■D■■-....**
		172 (231)	1217 (898)	255	460	45.7	2900	4500	**1PH8226-■■D■■-....**
		218 (292)	1542 (1137)	320	460	45.7	2800	4500	**1PH8228-■■D■■-....**
	280	325 (436)	2299 (1696)	475	460	45.5	2200	3300	**1PH8284-1■D4■-....**
		410 (550)	2901 (2140)	620	445	45.5	2200	3300	**1PH8286-1■D4■-....**
		505 (677)	3573 (2635)	750	450	45.5	2200	3300	**1PH8288-1■D4■-....**
2000	180	98 (131)	468 (345)	156	450	67.5	4300	5000	**1PH8184-■■F■■-....**
		135 (181)	645 (476)	210	445	67.5	4300	5000	**1PH8186-■■F■■-....**
	225	178 (239)	850 (627)	265	460	67.4	2900	4500	**1PH8224-■■F■■-....**
		220 (295)	1051 (775)	335	450	67.3	2900	4500	**1PH8226-■■F■■-....**
		288 (386)	1375 (1014)	440	450	67.3	2900	4500	**1PH8228-■■F■■-....**
	280	415 (557)	1981 (1461)	600	455	67.3	2200	3300	**1PH8284-1■F4■-....**
		500 (671)	2387 (1761)	720	455	67.2	2200	3300	**1PH8286-1■F4■-....**
		630 (845)	3009 (2219)	900	455	67.2	2200	3300	**1PH8288-1■F4■-....**
3400	180	113 (152)	317 (234)	176	460	114.1	4500	5000	**1PH8184-■■L■■-....**
		130 (174)	365 (269)	210	455	113.9	4500	5000	**1PH8186-■■L■■-....**
	225	205 (275)	576 (425)	310	460	114.0	3500	4500	**1PH8224-■■L■■-....**
		270 (362)	758 (559)	405	460	113.9	3500	4500	**1PH8226-■■L■■-....**
		300 (402)	843 (622)	450	460	113.8	3500	4500	**1PH8228-■■L■■-....**

For versions, see Article No. supplements and options.

For footnotes, see next page.

© Siemens AG 2017

Motor type (repeated)	Power factor	Magnetizing current	Efficiency	Moment of inertia	Weight without holding brake, approx.	Terminal box	SINAMICS S120 Motor Module: Rated output current [3]	SINAMICS S120 Motor Module: Internal air cooling For further components, see SINAMICS S120 drive system
	cos φ	I_μ	η	J			I_{rated}	
		A		kgm² (lbf-in-s²)	kg (lb)	Type	A	Article No.
1PH8184- . . B . . .	0.85	28	0.863	0.489 (4.33)	350 (772)	1XB7322-P05	85	**6SL3120-1TE28-5AA.**
1PH8186- . . B . . .	0.84	41	0.874	0.652 (5.77)	422 (930)	1XB7322-P05	85 [4]	**6SL3120-1TE28-5AA.**
1PH8224- . . B . . .	0.90	35	0.883	1.48 (13.1)	610 (1345)	1XB7322-P05	132	**6SL3120-1TE31-3AA.**
1PH8226- . . B . . .	0.90	49	0.899	1.93 (17.1)	740 (1631)	1XB7322-P05	200	**6SL3120-1TE32-0AA.**
1PH8228- . . B . . .	0.90	57	0.902	2.33 (20.6)	870 (1918)	1XB7322-P05	200	**6SL3120-1TE32-0AA.**
1PH8184- . . C . . .	0.89	30	0.896	0.489 (4.33)	350 (772)	1XB7322-P05	132	**6SL3120-1TE31-3AA.**
1PH8186- . . C . . .	0.89	39	0.912	0.652 (5.77)	422 (930)	1XB7322-P05	132	**6SL3120-1TE31-3AA.**
1PH8224- . . C . . .	0.88	61	0.929	1.48 (13.1)	610 (1345)	1XB7322-P05	200	**6SL3120-1TE32-0AA.**
1PH8226- . . C . . .	0.89	74	0.932	1.93 (17.1)	740 (1631)	1XB7422-P06	260	**6SL3320-1TE32-6AA.**
1PH8228- . . C . . .	0.90	79	0.936	2.33 (20.6)	870 (1918)	1XB7422-P06	260	**6SL3320-1TE32-6AA.**
1PH8284-1. C . . .	0.91	97	0.946	4.20 (37.2)	1200 (2646)	1XB7700-P02	380	**6SL3320-1TE33-8AA.**
1PH8286-1. C . . .	0.91	117	0.948	5.20 (46.0)	1400 (3086)	1XB7700-P02	490	**6SL3320-1TE35-0AA.**
1PH8288-1. C . . .	0.91	164	0.953	6.30 (55.8)	1650 (3638)	1XB7700-P02	745	**6SL3320-1TE37-5AA.**
1PH8184- . . D . . .	0.88	39	0.922	0.489 (4.33)	350 (772)	1XB7322-P05	132	**6SL3120-1TE31-3AA.**
1PH8186- . . D . . .	0.89	53	0.928	0.652 (5.77)	422 (930)	1XB7322-P05	200	**6SL3120-1TE32-0AA.**
1PH8224- . . D . . .	0.87	75	0.941	1.48 (13.1)	610 (1345)	1XB7422-P06	260	**6SL3320-1TE32-6AA.**
1PH8226- . . D . . .	0.89	85	0.945	1.93 (17.1)	740 (1631)	1XB7700-P02	310	**6SL3320-1TE33-1AA.**
1PH8228- . . D . . .	0.90	96	0.947	2.33 (20.6)	870 (1918)	1XB7700-P02	380	**6SL3320-1TE33-8AA.**
1PH8284-1. D . . .	0.90	146	0.957	4.20 (37.2)	1200 (2646)	1XB7700-P02	490	**6SL3320-1TE35-0AA.**
1PH8286-1. D . . .	0.89	210	0.960	5.20 (46.0)	1400 (3086)	1XB7700-P02	840	**6SL3320-1TE38-4AA.**
1PH8288-1. D . . .	0.90	243	0.962	6.30 (55.8)	1650 (3638)	1XB7712-P03	985	**6SL3320-1TE41-0AA.**
1PH8184- . . F . . .	0.85	63	0.943	0.489 (4.33)	350 (772)	1XB7322-P05	200	**6SL3120-1TE32-0AA.**
1PH8186- . . F . . .	0.87	83	0.948	0.652 (5.77)	422 (930)	1XB7422-P06	260	**6SL3320-1TE32-6AA.**
1PH8224- . . F . . .	0.88	88	0.952	1.48 (13.1)	610 (1345)	1XB7700-P02	310	**6SL3320-1TE33-1AA.**
1PH8226- . . F . . .	0.88	117	0.957	1.93 (17.1)	740 (1631)	1XB7700-P02	380	**6SL3320-1TE33-8AA.**
1PH8228- . . F . . .	0.88	166	0.959	2.33 (20.6)	870 (1918)	1XB7700-P02	490	**6SL3320-1TE35-0AA.**
1PH8284-1. F . . .	0.91	157	0.962	4.20 (37.2)	1200 (2646)	1XB7700-P02	745	**6SL3320-1TE37-5AA.**
1PH8286-1. F . . .	0.92	178	0.963	5.20 (46.0)	1400 (3086)	1XB7712-P03	840	**6SL3320-1TE38-4AA.**
1PH8288-1. F . . .	0.92	227	0.965	6.30 (55.8)	1650 (3638)	1XB7712-P03	985	**6SL3320-1TE41-0AA.**
1PH8184- . . L . . .	0.85	75	0.953	0.489 (4.33)	350 (772)	1XB7322-P05	210	**6SL3320-1TE32-1AA.**
1PH8186- . . L . . .	0.82	108	0.954	0.652 (5.77)	422 (930)	1XB7422-P06	310	**6SL3320-1TE33-1AA.**
1PH8224- . . L . . .	0.87	113	0.954	1.48 (13.1)	610 (1345)	1XB7700-P02	380	**6SL3320-1TE33-8AA.**
1PH8226- . . L . . .	0.87	153	0.957	1.93 (17.1)	740 (1631)	1XB7700-P02	490	**6SL3320-1TE35-0AA.**
1PH8228- . . L . . .	0.87	181	0.958	2.33 (20.6)	870 (1918)	1XB7700-P02	745	**6SL3320-1TE37-5AA.**
						Version status		

[1] n_2: Maximum permissible thermal speed at constant power.

[2] n_{max}: Maximum speed that must not be exceeded (applicable to Standard: 14th digit of article number A to F); limitations must be taken into consideration where applicable (e.g. with holding brake), see Article No. supplements.

[3] I_{rated}: Output current of the Motor Module at rated pulse frequency (see SINAMICS S120 drive system).
The rated motor data is valid for 2 kHz (SH 180 to 280).

[4] The output current of the Motor Module is lower than the rated motor current for the pulse frequency on which it is based.

© Siemens AG 2017

Selection and ordering data

Rated speed	Shaft height	Rated power	Rated torque	Rated current	Rated voltage	Rated frequency	Operating speed during field weakening, max. [1]	Speed, max. [2]	**SIMOTICS M-1PH8 asynchronous motors Forced ventilation**
n_{rated}	SH	P_{rated}	M_{rated}	I_{rated}	U_{rated}	f_{rated}	n_2	n_{max}	
rpm		kW (hp)	Nm (lb_f-ft)	A	V	Hz	rpm	rpm	Article No.
Line voltage 480 V 3 AC, Active Line Module									
700	180	42 (56.3)	573 (423)	65	500	24.2	2200	5000	**1PH8184-■■B■■-....**
		56 (75.1)	764 (1025)	88	500	24.1	2400	5000	**1PH8186-■■B■■-....**
	225	67 (39.8)	914 (674)	98	500	24.0	2300	4500	**1PH8224-■■B■■-....**
		87 (117)	1187 (875)	128	500	23.9	2400	4500	**1PH8226-■■B■■-....**
		108 (145)	1473 (1086)	156	500	23.9	2500	4500	**1PH8228-■■B■■-....**
1100	180	62 (83.1)	538 (397)	89	500	37.7	2500	5000	**1PH8184-■■C■■-....**
		80 (107)	695 (513)	114	500	37.6	2800	5000	**1PH8186-■■C■■-....**
	225	105 (141)	912 (673)	160	470	37.3	2500	4500	**1PH8224-■■C■■-....**
		146 (196)	1268 (935)	205	500	37.3	2500	4500	**1PH8226-■■C■■-....**
		165 (221)	1433 (1057)	225	500	37.3	2700	4500	**1PH8228-■■C■■-....**
	280	250 (335)	2170 (1601)	335	500	37.2	1700	3300	**1PH8284-1■C4■-....**
		330 (443)	2865 (2113)	440	500	37.2	2000	3300	**1PH8286-1■C4■-....**
		405 (543)	3516 (2593)	540	500	37.2	2050	3300	**1PH8288-1■C4■-....**
1500	180	76 (102)	484 (357)	108	500	50.9	3600	5000	**1PH8184-■■D■■-....**
		105 (141)	669 (493)	148	500	50.9	3800	5000	**1PH8186-■■D■■-....**
	225	137 (184)	872 (643)	194	500	50.6	3400	4500	**1PH8224-■■D■■-....**
		172 (231)	1095 (808)	240	500	50.7	3100	4500	**1PH8226-■■D■■-....**
		218 (292)	1388 (1024)	295	500	50.7	3000	4500	**1PH8228-■■D■■-....**
	280	325 (436)	2069 (1526)	440	500	50.5	2200	3300	**1PH8284-1■D4■-....**
		410 (550)	2610 (1925)	560	495	50.4	2200	3300	**1PH8286-1■D4■-....**
		505 (677)	3215 (2371)	680	500	50.4	2200	3300	**1PH8288-1■D4■-....**
2200	180	98 (131)	425 (313)	144	500	74.1	4300	5000	**1PH8184-■■F■■-....**
		135 (181)	586 (432)	196	490	74.1	4300	5000	**1PH8186-■■F■■-....**
	225	178 (239)	773 (570)	250	500	74.0	2900	4500	**1PH8224-■■F■■-....**
		220 (295)	955 (704)	305	500	73.9	2900	4500	**1PH8226-■■F■■-....**
		288 (386)	1250 (922)	405	500	73.9	2900	4500	**1PH8228-■■F■■-....**
	280	394 (528)	1710 (1261)	520	500	73.8	2400	3300	**1PH8284-1■F4■-....**
		475 (637)	2062 (1521)	620	500	73.8	2400	3300	**1PH8286-1■F4■-....**
		599 (803)	2600 (1918)	790	500	73.8	2400	3300	**1PH8288-1■F4■-....**

For versions, see Article No. supplements and options.

For footnotes, see next page.

© Siemens AG 2017

Motor type (repeated)	Power factor	Magne-tizing current	Efficiency	Moment of inertia	Weight without hold-ing brake, approx.	Terminal box	SINAMICS S120 Motor Module: Rated output current [3]	SINAMICS S120 Motor Module: Internal air cooling For further components, see SINAMICS S120 drive system
	cos φ	I_μ	η	J			I_{rated}	
		A		kgm² (lb$_f$-in-s²)	kg (lb)	Type	A	Article No.
1PH8184- . . B . . .	0.85	27	0.877	0.489 (4.33)	350 (772)	1XB7322-P05	85	**6SL3120-1TE28-5AA.**
1PH8186- . . B . . .	0.83	43	0.889	0.652 (5.77)	422 (930)	1XB7322-P05	85 [4]	**6SL3120-1TE28-5AA.**
1PH8224- . . B . . .	0.86	41	0.914	1.48 (13.1)	610 (1345)	1XB7322-P05	132	**6SL3120-1TE31-3AA.**
1PH8226- . . B . . .	0.85	58	0.924	1.93 (17.1)	740 (1631)	1XB7322-P05	200	**6SL3120-1TE32-0AA.**
1PH8228- . . B . . .	0.86	67	0.926	2.33 (20.6)	870 (1918)	1XB7322-P05	200	**6SL3120-1TE32-0AA.**
1PH8184- . . C . . .	0.88	30	0.921	0.489 (4.33)	350 (772)	1XB7322-P05	132	**6SL3120-1TE31-3AA.**
1PH8186- . . C . . .	0.88	41	0.921	0.652 (5.77)	422 (930)	1XB7322-P05	132	**6SL3120-1TE31-3AA.**
1PH8224- . . C . . .	0.86	63	0.938	1.48 (13.1)	610 (1345)	1XB7322-P05	200	**6SL3120-1TE32-0AA.**
1PH8226- . . C . . .	0.87	81	0.942	1.93 (17.1)	740 (1631)	1XB7422-P06	260	**6SL3320-1TE32-6AA.**
1PH8228- . . C . . .	0.89	82	0.944	2.33 (20.6)	870 (1918)	1XB7422-P06	260	**6SL3320-1TE32-6AA.**
1PH8284-1. C . . .	0.9	98	0.951	4.20 (37.2)	1200 (2646)	1XB7700-P02	380	**6SL3320-1TE33-8AA.**
1PH8286-1. C . . .	0.91	115	0.952	5.20 (46.0)	1400 (3086)	1XB7700-P02	490	**6SL3320-1TE35-0AA.**
1PH8288-1. C . . .	0.91	162	0.956	6.30 (55.8)	1650 (3638)	1XB7700-P02	745	**6SL3320-1TE37-5AA.**
1PH8184- . . D . . .	0.87	40	0.931	0.489 (4.33)	350 (772)	1XB7322-P05	132	**6SL3120-1TE31-3AA.**
1PH8186- . . D . . .	0.88	54	0.935	0.652 (5.77)	422 (930)	1XB7322-P05	200	**6SL3120-1TE32-0AA.**
1PH8224- . . D . . .	0.86	77	0.947	1.48 (13.1)	610 (1345)	1XB7422-P06	260	**6SL3320-1TE32-6AA.**
1PH8226- . . D . . .	0.88	83	0.950	1.93 (17.1)	740 (1631)	1XB7700-P02	310	**6SL3320-1TE33-1AA.**
1PH8228- . . D . . .	0.9	94	0.952	2.33 (20.6)	870 (1918)	1XB7700-P02	380	**6SL3320-1TE33-8AA.**
1PH8284-1. D . . .	0.89	140	0.960	4.20 (37.2)	1200 (2646)	1XB7700-P02	490	**6SL3320-1TE35-0AA.**
1PH8286-1. D . . .	0.88	214	0.963	5.20 (46.0)	1400 (3086)	1XB7700-P02	840	**6SL3320-1TE38-4AA.**
1PH8288-1. D . . .	0.89	247	0.965	6.30 (55.8)	1650 (3638)	1XB7712-P03	985	**6SL3320-1TE41-0AA.**
1PH8184- . . F . . .	0.83	66	0.947	0.489 (4.33)	350 (772)	1XB7322-P05	200	**6SL3120-1TE32-0AA.**
1PH8186- . . F . . .	0.85	85	0.952	0.652 (5.77)	422 (930)	1XB7422-P06	260	**6SL3320-1TE32-6AA.**
1PH8224- . . F . . .	0.87	88	0.954	1.48 (13.1)	610 (1345)	1XB7700-P02	310	**6SL3320-1TE33-1AA.**
1PH8226- . . F . . .	0.87	120	0.959	1.93 (17.1)	740 (1631)	1XB7700-P02	380	**6SL3320-1TE33-8AA.**
1PH8228- . . F . . .	0.86	171	0.960	2.33 (20.6)	870 (1918)	1XB7700-P02	490	**6SL3320-1TE35-0AA.**
1PH8284-1. F . . .	0.9	159	0.964	4.20 (37.2)	1200 (2646)	1XB7700-P02	745	**6SL3320-1TE37-5AA.**
1PH8286-1. F . . .	0.91	180	0.966	5.20 (46.0)	1400 (3086)	1XB7712-P03	840	**6SL3320-1TE38-4AA.**
1PH8288-1. F . . .	0.91	230	0.967	6.30 (55.8)	1650 (3638)	1XB7712-P03	985	**6SL3320-1TE41-0AA.**

Version status

[1] n_2: Maximum permissible thermal speed at constant power.

[2] n_{max}: Maximum speed that must not be exceeded (applicable to Standard: 14th digit of article number A to F); limitations must be taken into consideration where applicable (e.g. with holding brake), see Article No. supplements.

[3] I_{rated}: Output current of the Motor Module at rated pulse frequency (see SINAMICS S120 drive system).
The rated motor data is valid for 2 kHz (SH 180 to 280).

[4] The output current of the Motor Module is lower than the rated motor current for the pulse frequency on which it is based.

© Siemens AG 2017

Selection and ordering data

Rated speed	Shaft height	Rated power	Rated torque	Rated current	Rated voltage	Rated frequency	Operating speed during field weakening, max. [1]	Speed, max. [2]	**SIMOTICS M-1PH8 asynchronous motors Forced ventilation**
n_{rated}	SH	P_{rated}	M_{rated}	I_{rated}	U_{rated}	f_{rated}	n_2	n_{max}	
rpm		kW (hp)	Nm (lb_f-ft)	A	V	Hz	rpm	rpm	Article No.
Line voltage 690 V 3 AC, Basic Line Module									
700	280	162 (217)	2210 (1630)	184	605	23.9	1200	3300	**1PH8284-1■K4■-....**
		210 (282)	2865 (2113)	235	605	23.8	1300	3300	**1PH8286-1■K4■-....**
		263 (353)	3588 (2646)	295	605	23.9	1400	3300	**1PH8288-1■K4■-....**
1000	280	236 (316)	2254 (1662)	265	600	33.9	1900	3300	**1PH8284-1■U4■-....**
		299 (401)	2855 (2106)	355	570	33.8	2000	3300	**1PH8286-1■U4■-....**
		367 (492)	3505 (2585)	425	580	33.8	2100	3300	**1PH8288-1■U4■-....**
1500	280	307 (412)	1955 (1442)	345	590	50.6	1900	3300	**1PH8284-1■W4■-....**
		370 (496)	2356 (1738)	410	590	50.6	2000	3300	**1PH8286-1■W4■-....**
		465 (624)	2961 (2184)	520	590	50.5	2100	3300	**1PH8288-1■W4■-....**
Line voltage 690 V 3 AC, Active Line Module									
800	280	185 (248)	2208 (1629)	182	690	27.2	1500	3300	**1PH8284-1■K4■-....**
		240 (322)	2865 (2113)	235	690	27.2	1600	3300	**1PH8286-1■K4■-....**
		300 (402)	3581 (2641)	290	690	27.3	1600	3300	**1PH8288-1■K4■-....**
1150	280	272 (365)	2255 (1663)	270	690	38.9	2200	3300	**1PH8284-1■U4■-....**
		344 (461)	2860 (2109)	355	655	38.8	2200	3300	**1PH8286-1■U4■-....**
		422 (566)	3504 (2584)	425	665	38.8	2200	3300	**1PH8288-1■U4■-....**
1750	280	359 (481)	1959 (1445)	345	690	58.9	2200	3300	**1PH8284-1■W4■-....**
		432 (579)	2356 (1738)	410	690	58.9	2200	3300	**1PH8286-1■W4■-....**
		543 (728)	2964 (2186)	510	690	58.9	2200	3300	**1PH8288-1■W4■-....**

For versions, see Article No. supplements and options.

For footnotes, see next page.

© Siemens AG 2017

Motor type (repeated)	Power factor	Magne-tizing current	Efficiency	Moment of inertia	Weight without hold-ing brake, approx.	Terminal box	SINAMICS S120 Motor Module	
							Rated output current [3]	Internal air cooling For further components, see SINAMICS S120 drive system
	cos φ	I_μ	η	J			I_{rated}	
		A		kgm^2 (lb$_f$-in-s^2)	kg (lb)	Type	A	Article No.
1PH8284-1.K...	0.91	50	0.927	4.20 (37.2)	1200 (2646)	1XB7700-P02	215	**6SL3320-1TG32-2AA.**
1PH8286-1.K...	0.90	79	0.938	5.20 (46.0)	1400 (3086)	1XB7700-P02	260	**6SL3320-1TG32-6AA.**
1PH8288-1.K...	0.92	71	0.929	6.30 (55.8)	1650 (3638)	1XB7700-P02	330 [4]	**6SL3320-1TG33-3AA.**
1PH8284-1.U...	0.90	85	0.947	4.20 (37.2)	1200 (2646)	1XB7700-P02	330	**6SL3320-1TG33-3AA.**
1PH8286-1.U...	0.89	119	0.952	5.20 (46.0)	1400 (3086)	1XB7700-P02	410	**6SL3320-1TG34-1AA.**
1PH8288-1.U...	0.90	140	0.954	6.30 (55.8)	1650 (3638)	1XB7700-P02	465	**6SL3320-1TG34-7AA.**
1PH8284-1.W...	0.91	89	0.956	4.20 (37.2)	1200 (2646)	1XB7700-P02	410	**6SL3320-1TG34-1AA.**
1PH8286-1.W...	0.92	101	0.958	5.20 (46.0)	1400 (3086)	1XB7700-P02	465	**6SL3320-1TG34-7AA.**
1PH8288-1.W...	0.92	130	0.960	6.30 (55.8)	1650 (3638)	1XB7700-P02	575	**6SL3320-1TG35-8AA.**
1PH8284-1.K...	0.91	51	0.934	4.20 (37.2)	1200 (2646)	1XB7700-P02	215	**6SL3320-1TG32-2AA.**
1PH8286-1.K...	0.90	79	0.944	5.20 (46.0)	1400 (3086)	1XB7700-P02	260	**6SL3320-1TG32-6AA.**
1PH8288-1.K...	0.92	72	0.936	6.30 (55.8)	1650 (3638)	1XB7700-P02	330	**6SL3320-1TG33-3AA.**
1PH8284-1.U...	0.89	86	0.951	4.20 (37.2)	1200 (2646)	1XB7700-P02	330	**6SL3320-1TG33-3AA.**
1PH8286-1.U...	0.89	119	0.956	5.20 (46.0)	1400 (3086)	1XB7700-P02	410	**6SL3320-1TG34-1AA.**
1PH8288-1.U...	0.90	140	0.958	6.30 (55.8)	1650 (3638)	1XB7700-P02	465	**6SL3320-1TG34-7AA.**
1PH8284-1.W...	0.91	91	0.959	4.20 (37.2)	1200 (2646)	1XB7700-P02	410	**6SL3320-1TG34-1AA.**
1PH8286-1.W...	0.92	102	0.961	5.20 (46.0)	1400 (3086)	1XB7700-P02	465	**6SL3320-1TG34-7AA.**
1PH8288-1.W...	0.92	131	0.963	6.30 (55.8)	1650 (3638)	1XB7700-P02	575	**6SL3320-1TG35-8AA.**
						Version status		

1) n_2: Maximum permissible thermal speed at constant power.
2) n_{max}: Maximum speed that must not be exceeded (applicable to Standard: 14th digit of the article number: A to F).
3) I_{rated}: Output current of the Motor Module at rated pulse frequency (see SINAMICS S120 drive system).
The rated motor data is valid for 2 kHz (SH 180 to 280).
4) The output current of the Motor Module is lower than the rated motor current for the pulse frequency on which it is based.

© Siemens AG 2017

Selection and ordering data

Rated speed	Shaft height	Rated power	Rated torque	Rated current	Rated voltage	Rated frequency	Operating speed during field weakening, max. [1]	Speed, max. [2]	**SIMOTICS M-1PH8 asynchronous motors Water cooling**
n_{rated}	SH	P_{rated}	M_{rated}	I_{rated}	U_{rated}	f_{rated}	n_2	n_{max}	
rpm		kW (hp)	Nm (lb_f-ft)	A	V	Hz	rpm	rpm	Article No.
Line voltage 400 V 3 AC, Smart/Basic Line Module									
1500	80	3.5 (4.69)	22 (16.2)	8.9	357	54.5	3550	10000	**1PH8083-■■F2■-....**
		4.6 (6.17)	29 (21.4)	13.7	316	53.3	6000	10000	**1PH8087-■■F2■-....**
	100	5 (6.71)	32 (23.6)	12.8	357	53.1	2500	9000	**1PH8101-■■F2■-....**
		7.1 (9.52)	45 (33.2)	19.7	317	53.0	4000	9000	**1PH8103-■■F2■-....**
		11 (14.8)	70 (51.6)	28.5	340	52.8	3500	9000	**1PH8105-■■F2■-....**
		14 (18.8)	89 (65.6)	43.7	277	53.3	5600	9000	**1PH8107-■■F2■-....**
	132	15 (20.1)	96 (70.8)	30	380	52.3	2500	8000	**1PH8131-■■F2■-....**
		17 (22.8)	108 (79.7)	38	345	51.5	3500	8000	**1PH8133-■■F2■-....**
		22 (16.2)	140 (103)	51	342	51.5	4000	8000	**1PH8135-■■F2■-....**
		27 (36.2)	172 (127)	67	315	51.6	4000	8000	**1PH8137-■■F2■-....**
		30 (40.2)	191 (141)	80	289	51.9	5000	8000	**1PH8138-■■F2■-....**
	160	37 (27.3)	236 (174)	84	328	51.1	3000	6500	**1PH8163-■■F2■-....**
		46 (61.7)	293 (216)	104	330	50.9	3050	6500	**1PH8165-■■F2■-....**
		52 (69.7)	331 (244)	116	332	51.2	3050	6500	**1PH8166-■■F2■-....**
2000	80	4.3 (5.77)	21 (15.5)	12	322	70.4	7200	10000	**1PH8083-■■G2■-....**
		6.1 (8.18)	29 (21.4)	17.5	312	70.3	7950	10000	**1PH8087-■■G2■-....**
	100	6.4 (8.58)	31 (22.9)	16.8	335	69.8	4000	9000	**1PH8101-■■G2■-....**
		9.5 (12.7)	45 (33.2)	23.8	343	69.8	3000	9000	**1PH8103-■■G2■-....**
		13.0 (17.4)	62 (45.7)	34.5	326	69.3	4000	9000	**1PH8105-■■G2■-....**
	132	18 (24.1)	86 (63.4)	40	352	69.1	4000	8000	**1PH8131-■■G2■-....**
		22 (29.5)	105 (77.4)	52	336	68.2	5000	8000	**1PH8133-■■G2■-....**
		29 (38.9)	138 (102)	64	348	68.3	4500	8000	**1PH8135-■■G2■-....**
	160	42 (56.3)	201 (148)	93	335	67.6	5000	6500	**1PH8163-■■G2■-....**
		53 (71.1)	253 (187)	110	352	67.6	3500	6500	**1PH8165-■■G2■-....**
		64 (85.8)	306 (226)	125	376	67.8	3000	6500	**1PH8166-■■G2■-....**
3000	100	10.6 (14.2)	34 (25.1)	30	309	102.4	11900	9000	**1PH8103-■■M2■-....**
		16.8 (22.5)	53 (39.1)	45	324	102.3	8050	9000	**1PH8105-■■M2■-....**
		18 (24.1)	57 (42.0)	60	264	102.2	17000	9000	**1PH8107-■■M2■-....**

For versions, see Article No. supplements and options.

For footnotes, see next page.

© Siemens AG 2017

Motor type (repeated)	Power factor	Magne-tizing current	Efficiency	Moment of inertia without holding brake	Weight without hold-ing brake, approx.	Terminal box	SINAMICS S120 Motor Module: Rated output current [3]	SINAMICS S120 Motor Module: Internal air cooling For further components, see SINAMICS S120 drive system
	cos φ	I_μ	η	J			I_{rated}	
		A		kgm² (lb$_f$-in-s²)	kg (lb)	Type	A	Article No.
1PH8083-..F...	0.84	3.6	0.784	0.0064 (0.06)	36 (79.4)	gk803	9	**6SL3120-■TE21-0AD .**
1PH8087-..F...	0.78	7.2	0.814	0.0089 (0.08)	44 (97.0)	gk803	18	**6SL3120-■TE21-8A■ .**
1PH8101-..F...	0.81	6.0	0.813	0.0138 (0.12)	51 (112)	gk823	18	**6SL3120-■TE21-8A■ .**
1PH8103-..F...	0.82	8.6	0.827	0.0172 (0.15)	60 (132)	gk823	30	**6SL3120-1TE23-0A■ .**
1PH8105-..F...	0.81	13.3	0.843	0.0252 (0.22)	74 (163)	gk823	30	**6SL3120-1TE23-0A■ .**
1PH8107-..F...	0.83	17.8	0.829	0.0289 (0.26)	83 (183)	gk823	45	**6SL3120-1TE24-5AA .**
1PH8131-..F...	0.89	9.2	0.883	0.0590 (0.52)	105 (231)	gk843	30	**6SL3120-1TE23-0A■ .**
1PH8133-..F...	0.86	14.2	0.897	0.0760 (0.67)	123 (271)	gk843	45	**6SL3120-1TE24-5AA .**
1PH8135-..F...	0.85	20.3	0.901	0.0940 (0.83)	141 (311)	gk843	60	**6SL3120-1TE26-0AA .**
1PH8137-..F...	0.86	25.3	0.900	0.1090 (0.96)	157 (346)	gk843	85	**6SL3120-1TE28-5AA .**
1PH8138-..F...	0.88	27.1	0.882	0.1090 (0.96)	157 (346)	gk843	85	**6SL3120-1TE28-5AA .**
1PH8163-..F...	0.88	27.4	0.916	0.2160 (1.91)	229 (505)	gk873	85	**6SL3120-1TE28-5AA .**
1PH8165-..F...	0.87	37.2	0.930	0.2320 (2.05)	264 (582)	gk873	132	**6SL3120-1TE31-3AA .**
1PH8166-..F...	0.88	36.7	0.936	0.2320 (2.05)	269 (593)	gk873	132	**6SL3120-1TE31-3AA .**
1PH8083-..G...	0.80	5.9	0.833	0.0064 (0.06)	36 (79.4)	gk803	18	**6SL3120-■TE21-8A■ .**
1PH8087-..G...	0.80	8.4	0.843	0.0089 (0.08)	44 (97.0)	gk803	18	**6SL3120-■TE21-8A■ .**
1PH8101-..G...	0.81	7.6	0.857	0.0138 (0.12)	51 (112)	gk823	18	**6SL3120-■TE21-8A■ .**
1PH8103-..G...	0.82	10.3	0.857	0.0172 (0.15)	60 (132)	gk823	30	**6SL3120-1TE23-0A■ .**
1PH8105-..G...	0.81	15.6	0.879	0.0252 (0.22)	74 (163)	gk823	45	**6SL3120-1TE24-5AA .**
1PH8131-..G...	0.85	15.5	0.908	0.0590 (0.52)	105 (231)	gk843	45	**6SL3120-1TE24-5AA .**
1PH8133-..G...	0.84	22.2	0.909	0.0760 (0.67)	123 (271)	gk843	60	**6SL3120-1TE26-0AA .**
1PH8135-..G...	0.86	23.9	0.924	0.0940 (0.83)	141 (311)	gk843	85	**6SL3120-1TE28-5AA .**
1PH8163-..G...	0.88	30.8	0.937	0.2160 (1.91)	229 (505)	gk873	132	**6SL3120-1TE31-3AA .**
1PH8165-..G...	0.89	32.1	0.938	0.2320 (2.05)	264 (582)	gk873	132	**6SL3120-1TE31-3AA .**
1PH8166-..G...	0.88	39.3	0.937	0.2320 (2.05)	269 (593)	gk873	132	**6SL3120-1TE31-3AA .**
1PH8103-..M...	0.80	13.0	0.900	0.0172 (0.15)	60 (132)	gk823	30	**6SL3120-1TE23-0A■ .**
1PH8105-..M...	0.80	20.3	0.900	0.0252 (0.22)	74 (163)	gk823	45	**6SL3120-1TE24-5AA .**
1PH8107-..M...	0.80	26.0	0.900	0.0289 (0.26)	83 (183)	gk823	60	**6SL3120-1TE26-0AA .**

Single Motor Module	**1**
Double Motor Module	**2**
Motor Module	
for continuous load with 200 % overload (C-type)	**C**
for highly dynamic, intermittent load cycles with 300 % overload (D-type)	**D**
Version status	

9

[1] n_2: Maximum permissible thermal speed at constant power.

[2] n_{max}: Maximum speed that must not be exceeded (applicable to Standard: 14th digit of article number B to H); for performance bearing (14th digit = "L"), the increased maximum speeds apply; limitations must be taken into consideration where necessary (e.g. with holding brake), see Article No. supplements.

[3] I_{rated}: Output current of the Motor Module at rated pulse frequency (see SINAMICS S120 drive system).
The rated motor data is valid for 4 kHz (SH 80 to 160).

© Siemens AG 2017

Selection and ordering data

Rated speed	Shaft height	Rated power	Rated torque	Rated current	Rated voltage	Rated frequency	Operating speed during field weakening, max. [1]	Speed, max. [2]	SIMOTICS M-1PH8 asynchronous motors Water cooling
n_{rated}	SH	P_{rated}	M_{rated}	I_{rated}	U_{rated}	f_{rated}	n_2	n_{max}	
rpm		kW (hp)	Nm (lb_f-ft)	A	V	Hz	rpm	rpm	Article No.
Line voltage 400 V 3 AC, Active Line Module									
1750	80	4 (5.36)	22 (16.2)	8.7	416	62.4	4100	10000	**1PH8083-■■F2■-....**
		5.4 (7.24)	29 (21.4)	13.7	358	61.8	6600	10000	**1PH8087-■■F2■-....**
	100	5.8 (7.78)	32 (23.6)	12.8	400	61.7	2500	9000	**1PH8101-■■F2■-....**
		8.2 (11.0)	45 (33.2)	19.7	364	61.4	5000	9000	**1PH8103-■■F2■-....**
		12.5 (16.8)	68 (50.2)	28.5	380	61.2	3400	9000	**1PH8105-■■F2■-....**
		15.5 (20.8)	85 (62.7)	42	314	61.4	4500	9000	**1PH8107-■■F2■-....**
	132	17 (22.8)	93 (68.6)	30	425	60.7	2500	8000	**1PH8131-■■F2■-....**
		19.5 (26.1)	106 (78.2)	38	403	59.8	3500	8000	**1PH8133-■■F2■-....**
		25.5 (34.2)	139 (103)	51	395	59.8	4000	8000	**1PH8135-■■F2■-....**
		31.5 (42.2)	172 (127)	67	365	59.9	4500	8000	**1PH8137-■■F2■-....**
		33 (44.3)	180 (133)	77	332	60.0	5000	8000	**1PH8138-■■F2■-....**
	160	43 (57.7)	235 (173)	84	380	59.4	3500	6500	**1PH8163-■■F2■-....**
		53 (71.1)	289 (213)	104	374	59.3	3050	6500	**1PH8165-■■F2■-....**
		61 (81.8)	333 (246)	116	381	59.5	3050	6500	**1PH8166-■■F2■-....**
2300	80	4.9 (6.57)	20 (14.8)	12	362	80.5	8150	10000	**1PH8083-■■G2■-....**
		7 (9.39)	29 (21.4)	17.7	355	80.3	8850	10000	**1PH8087-■■G2■-....**
	100	7.3 (9.79)	30 (22.1)	16.8	382	79.7	5000	9000	**1PH8101-■■G2■-....**
		10.9 (14.6)	45 (33.2)	23.8	390	79.8	3000	9000	**1PH8103-■■G2■-....**
		15.0 (20.1)	62 (45.7)	34	370	79.3	3500	9000	**1PH8105-■■G2■-....**
	132	20 (26.8)	83 (61.2)	39	400	78.5	4000	8000	**1PH8131-■■G2■-....**
		25 (33.5)	104 (76.7)	52	373	78.3	6000	8000	**1PH8133-■■G2■-....**
		31 (41.6)	129 (95.1)	61	397	78.1	4500	8000	**1PH8135-■■G2■-....**
	160	48 (64.4)	199 (147)	93	382	77.6	4000	6500	**1PH8163-■■G2■-....**
		60 (80.5)	249 (184)	107	410	77.6	3000	6500	**1PH8165-■■G2■-....**
		72 (96.6)	299 (221)	124	420	77.8	3000	6500	**1PH8166-■■G2■-....**
3300	100	11.7 (15.7)	34 (25.1)	30	340	112.4	13550	9000	**1PH8103-■■M2■-....**
		18.5 (24.8)	54 (39.8)	45	355	112.4	9050	9000	**1PH8105-■■M2■-....**
		20 (26.8)	58 (42.8)	60	290	112.6	18050	9000	**1PH8107-■■M2■-....**

For versions, see Article No. supplements and options.

For footnotes, see next page.

© Siemens AG 2017

Motor type (repeated)	Power factor	Magne-tizing current	Efficiency	Moment of inertia without holding brake	Weight without hold-ing brake, approx.	Terminal box	SINAMICS S120 Motor Module	
							Rated output current [3]	Internal air cooling For further components, see SINAMICS S120 drive system
	cos φ	I_μ	η	J			I_{rated}	
		A		kgm^2 (lb$_f$-in-s^2)	kg (lb)	Type	A	Article No.
1PH8083-..F...	0.82	4.0	0.808	0.0064 (0.06)	36 (79.4)	gk803	9	**6SL3120-■TE21-0AD .**
1PH8087-..F...	0.80	6.8	0.831	0.0089 (0.08)	44 (97.0)	gk803	18	**6SL3120-■TE21-8A■ .**
1PH8101-..F...	0.83	5.4	0.834	0.0138 (0.12)	51 (112)	gk823	18	**6SL3120-■TE21-8A■ .**
1PH8103-..F...	0.82	8.6	0.851	0.0172 (0.15)	60 (132)	gk823	30	**6SL3120-1TE23-0A■ .**
1PH8105-..F...	0.81	12.1	0.862	0.0252 (0.22)	74 (163)	gk823	30	**6SL3120-1TE23-0A■ .**
1PH8107-..F...	0.83	17.5	0.847	0.0289 (0.26)	83 (183)	gk823	45	**6SL3120-1TE24-5AA .**
1PH8131-..F...	0.89	8.2	0.897	0.0590 (0.52)	105 (231)	gk843	30	**6SL3120-1TE23-0A■ .**
1PH8133-..F...	0.85	14.9	0.913	0.0760 (0.67)	123 (271)	gk843	45	**6SL3120-1TE24-5AA .**
1PH8135-..F...	0.85	20.1	0.914	0.0940 (0.83)	141 (311)	gk843	60	**6SL3120-1TE26-0AA .**
1PH8137-..F...	0.86	24.8	0.911	0.1090 (0.96)	157 (346)	gk843	85	**6SL3120-1TE28-5AA .**
1PH8138-..F...	0.87	27.1	0.898	0.1090 (0.96)	157 (346)	gk843	85	**6SL3120-1TE28-5AA .**
1PH8163-..F...	0.88	27.3	0.924	0.2160 (1.91)	229 (505)	gk873	85	**6SL3120-1TE28-5AA .**
1PH8165-..F...	0.88	33.8	0.935	0.2320 (2.05)	264 (582)	gk873	132	**6SL3120-1TE31-3AA .**
1PH8166-..F...	0.89	35.2	0.940	0.2320 (2.05)	269 (593)	gk873	132	**6SL3120-1TE31-3AA .**
1PH8083-..G...	0.80	5.8	0.846	0.0064 (0.06)	36 (79.4)	gk803	18	**6SL3120-■TE21-8A■ .**
1PH8087-..G...	0.79	8.6	0.860	0.0089 (0.08)	44 (97.0)	gk803	18	**6SL3120-■TE21-8A■ .**
1PH8101-..G...	0.80	7.8	0.874	0.0138 (0.12)	51 (112)	gk823	18	**6SL3120-■TE21-8A■ .**
1PH8103-..G...	0.82	10.3	0.883	0.0172 (0.15)	60 (132)	gk823	30	**6SL3120-1TE23-0A■ .**
1PH8105-..G...	0.81	15.1	0.891	0.0252 (0.22)	74 (163)	gk823	45	**6SL3120-1TE24-5AA .**
1PH8131-..G...	0.85	15.4	0.920	0.0590 (0.52)	105 (231)	gk843	45	**6SL3120-1TE24-5AA .**
1PH8133-..G...	0.86	19.4	0.923	0.0760 (0.67)	123 (271)	gk843	60	**6SL3120-1TE26-0AA .**
1PH8135-..G...	0.85	24.1	0.933	0.0940 (0.83)	141 (311)	gk843	85	**6SL3120-1TE28-5AA .**
1PH8163-..G...	0.88	30.2	0.939	0.2160 (1.91)	229 (505)	gk873	132	**6SL3120-1TE31-3AA .**
1PH8165-..G...	0.88	33.7	0.946	0.2320 (2.05)	264 (582)	gk873	132	**6SL3120-1TE31-3AA .**
1PH8166-..G...	0.89	35.5	0.946	0.2320 (2.05)	269 (593)	gk873	132	**6SL3120-1TE31-3AA .**
1PH8103-..M...	0.80	13.2	0.900	0.0172 (0.15)	60 (132)	gk823	30	**6SL3120-1TE23-0A■ .**
1PH8105-..M...	0.80	20.2	0.910	0.0252 (0.22)	74 (163)	gk823	45	**6SL3120-1TE24-5AA .**
1PH8107-..M...	0.80	26.1	0.900	0.0289 (0.26)	83 (183)	gk823	60	**6SL3120-1TE26-0AA .**

Single Motor Module	**1**
Double Motor Module	**2**
Motor Module	
for continuous load with 200 % overload (C-type)	**C**
for highly dynamic, intermittent load cycles with 300 % overload (D-type)	**D**
Version status	

[1] n_2: Maximum permissible thermal speed at constant power.

[2] n_{max}: Maximum speed that must not be exceeded (applicable to Standard: 14th digit of article number B to H); for performance bearing (14th digit = "L"), the increased maximum speeds apply; limitations must be taken into consideration where necessary (e.g. with holding brake), see Article No. supplements.

[3] I_{rated}: Output current of the Motor Module at rated pulse frequency (see SINAMICS S120 drive system).
The rated motor data is valid for 4 kHz (SH 80 to 160).

© Siemens AG 2017

Selection and ordering data

Rated speed	Shaft height	Rated power	Rated torque	Rated current	Rated voltage	Rated frequency	Operating speed during field weakening, max. [1]	Speed, max. [2]	SIMOTICS M-1PH8 asynchronous motors Water cooling
n_{rated}	SH	P_{rated}	M_{rated}	I_{rated}	U_{rated}	f_{rated}	n_2	n_{max}	
rpm		kW (hp)	Nm (lb_f-ft)	A	V	Hz	rpm	rpm	Article No.
Line voltage 480 V 3 AC, Smart/Basic Line Module									
2000	80	4.6 (6.17)	22 (16.2)	8.7	457	71.0	4250	10000	**1PH8083-■■F2■-....**
		6.1 (8.18)	29 (21.4)	13.7	402	70.0	6950	10000	**1PH8087-■■F2■-....**
	100	6.6 (8.85)	32 (23.6)	12.5	450	69.9	2500	9000	**1PH8101-■■F2■-....**
		9.4 (12.6)	45 (33.2)	19.7	411	69.7	5000	9000	**1PH8103-■■F2■-....**
		14 (18.8)	67 (39.8)	27.5	426	69.5	3000	9000	**1PH8105-■■F2■-....**
		18 (24.1)	86 (63.4)	42.6	363	69.7	3000	9000	**1PH8107-■■F2■-....**
	132	18.5 (24.8)	88 (64.9)	30	460	68.7	2500	8000	**1PH8131-■■F2■-....**
		22.5 (30.2)	107 (78.9)	38	452	68.2	4000	8000	**1PH8133-■■F2■-....**
		29 (38.9)	138 (102)	52	448	68.2	4500	8000	**1PH8135-■■F2■-....**
		36 (48.3)	172 (127)	67	415	68.3	4000	8000	**1PH8137-■■F2■-....**
		37 (49.6)	177 (131)	76	380	68.4	6000	8000	**1PH8138-■■F2■-....**
	160	49 (65.7)	234 (173)	84	430	67.7	3500	6500	**1PH8163-■■F2■-....**
		60 (80.5)	287 (212)	103	426	67.6	3050	6500	**1PH8165-■■F2■-....**
		68 (91.2)	325 (240)	116	426	67.9	3050	6500	**1PH8166-■■F2■-....**
2650	80	5.6 (7.51)	20 (14.8)	12	425	91.8	8500	10000	**1PH8083-■■G2■-....**
		8.1 (10.9)	29 (21.4)	17.8	415	91.8	9150	10000	**1PH8087-■■G2■-....**
	100	8.4 (11.3)	30 (22.1)	16.8	435	91.4	4000	9000	**1PH8101-■■G2■-....**
		12.5 (16.8)	45 (33.2)	23.5	454	91.2	4000	9000	**1PH8103-■■G2■-....**
		17.0 (22.8)	61 (45.0)	33.5	424	90.9	4500	9000	**1PH8105-■■G2■-....**
	132	23 (30.8)	83 (61.2)	39	458	90.1	4500	8000	**1PH8131-■■G2■-....**
		28 (37.5)	101 (74.5)	50	427	89.9	6000	8000	**1PH8133-■■G2■-....**
		32 (42.9)	115 (84.8)	58	448	89.6	5500	8000	**1PH8135-■■G2■-....**
	160	55 (73.8)	198 (146)	90	450	89.2	5000	6500	**1PH8163-■■G2■-....**
		65 (87.2)	234 (173)	100	460	89.2	4000	6500	**1PH8165-■■G2■-....**
		83 (111)	299 (221)	125	460	89.6	3000	6500	**1PH8166-■■G2■-....**
3600	100	12.7 (17.0)	34 (25.1)	29.7	368	122.5	17650	9000	**1PH8103-■■M2■-....**
		20 (26.8)	53 (39.1)	45	375	122.5	10000	9000	**1PH8105-■■M2■-....**
		21 (28.2)	56 (41.3)	59	315	122.1	17650	9000	**1PH8107-■■M2■-....**

For versions, see Article No. supplements and options.

For footnotes, see next page.

© Siemens AG 2017

Motor type (repeated)	Power factor	Magne-tizing current	Efficiency	Moment of inertia without holding brake	Weight without hold-ing brake, approx.	Terminal box	SINAMICS S120 Motor Module	
							Rated output current [3]	Internal air cooling For further components, see SINAMICS S120 drive system
	cos φ	I_μ	η	J			I_{rated}	
		A		kgm^2 (lb$_f$-in-s^2)	kg (lb)	Type	A	Article No.
1PH8083-..F...	0.83	3.8	0.839	0.0064 (0.06)	36 (79.4)	gk803	9	**6SL3120-■TE21-0AD .**
1PH8087-..F...	0.79	6.8	0.868	0.0089 (0.08)	44 (97.0)	gk803	18	**6SL3120-■TE21-8A■ .**
1PH8101-..F...	0.82	4.4	0.858	0.0138 (0.12)	51 (112)	gk823	18	**6SL3120-■TE21-8A■ .**
1PH8103-..F...	0.82	8.5	0.869	0.0172 (0.15)	60 (132)	gk823	30	**6SL3120-1TE23-0A■ .**
1PH8105-..F...	0.82	11.7	0.894	0.0252 (0.22)	74 (163)	gk823	30	**6SL3120-1TE23-0A■ .**
1PH8107-..F...	0.81	19.1	0.873	0.0289 (0.26)	83 (183)	gk823	45	**6SL3120-1TE24-5AA .**
1PH8131-..F...	0.90	7.2	0.912	0.0590 (0.52)	105 (231)	gk843	30	**6SL3120-1TE23-0A■ .**
1PH8133-..F...	0.86	14.4	0.938	0.0760 (0.67)	123 (271)	gk843	45	**6SL3120-1TE24-5AA .**
1PH8135-..F...	0.85	19.9	0.931	0.0940 (0.83)	141 (311)	gk843	60	**6SL3120-1TE26-0AA .**
1PH8137-..F...	0.86	25.4	0.928	0.1090 (0.96)	157 (346)	gk843	85	**6SL3120-1TE28-5AA .**
1PH8138-..F...	0.86	28.4	0.920	0.1090 (0.96)	157 (346)	gk843	85	**6SL3120-1TE28-5AA .**
1PH8163-..F...	0.88	26.9	0.925	0.2160 (1.91)	229 (505)	gk873	85	**6SL3120-1TE28-5AA .**
1PH8165-..F...	0.88	34.0	0.940	0.2320 (2.05)	264 (582)	gk873	132	**6SL3120-1TE31-3AA .**
1PH8166-..F...	0.89	32.8	0.941	0.2320 (2.05)	269 (593)	gk873	132	**6SL3120-1TE31-3AA .**
1PH8083-..G...	0.76	6.5	0.862	0.0064 (0.06)	36 (79.4)	gk803	18	**6SL3120-■TE21-8A■ .**
1PH8087-..G...	0.77	9.3	0.871	0.0089 (0.08)	44 (97.0)	gk803	18	**6SL3120-■TE21-8A■ .**
1PH8101-..G...	0.80	7.7	0.888	0.0138 (0.12)	51 (112)	gk823	18	**6SL3120-■TE21-8A■ .**
1PH8103-..G...	0.79	11.3	0.904	0.0172 (0.15)	60 (132)	gk823	30	**6SL3120-1TE23-0A■ .**
1PH8105-..G...	0.81	15.3	0.911	0.0252 (0.22)	74 (163)	gk823	45	**6SL3120-1TE24-5AA .**
1PH8131-..G...	0.85	15.4	0.938	0.0590 (0.52)	105 (231)	gk843	45	**6SL3120-1TE24-5AA .**
1PH8133-..G...	0.85	19.5	0.933	0.0760 (0.67)	123 (271)	gk843	60	**6SL3120-1TE26-0AA .**
1PH8135-..G...	0.84	23.0	0.942	0.0940 (0.83)	141 (311)	gk843	85	**6SL3120-1TE28-5AA .**
1PH8163-..G...	0.86	33.6	0.940	0.2160 (1.91)	229 (505)	gk873	132	**6SL3120-1TE31-3AA .**
1PH8165-..G...	0.89	31.9	0.948	0.2320 (2.05)	264 (582)	gk873	132	**6SL3120-1TE31-3AA .**
1PH8166-..G...	0.90	35.7	0.948	0.2320 (2.05)	269 (593)	gk873	132	**6SL3120-1TE31-3AA .**
1PH8103-..M...	0.80	13.0	0.910	0.0172 (0.15)	60 (132)	gk823	30	**6SL3120-1TE23-0A■ .**
1PH8105-..M...	0.81	18.6	0.920	0.0252 (0.22)	74 (163)	gk823	45	**6SL3120-1TE24-5AA .**
1PH8107-..M...	0.79	26.1	0.910	0.0289 (0.26)	83 (183)	gk823	60	**6SL3120-1TE26-0AA .**

Single Motor Module	**1**
Double Motor Module	**2**
Motor Module	
for continuous load with 200 % overload (C-type)	**C**
for highly dynamic, intermittent load cycles with 300 % overload (D-type)	**D**
Version status	

[1] n_2: Maximum permissible thermal speed at constant power.

[2] n_{max}: Maximum speed that must not be exceeded (applicable to Standard: 14th digit of article number B to H); for performance bearing (14th digit = "L"), the increased maximum speeds apply; limitations must be taken into consideration where necessary (e.g. with holding brake), see Article No. supplements.

[3] I_{rated}: Output current of the Motor Module at rated pulse frequency (see SINAMICS S120 drive system).
The rated motor data is valid for 4 kHz (SH 80 to 160).

© Siemens AG 2017

Selection and ordering data

Rated speed	Shaft height	Rated power	Rated torque	Rated current	Rated voltage	Rated frequency	Operating speed during field weakening, max. [1]	Speed, max. [2]	**SIMOTICS M-1PH8 asynchronous motors Water cooling**
n_{rated}	SH	P_{rated}	M_{rated}	I_{rated}	U_{rated}	f_{rated}	n_2	n_{max}	
rpm		kW (hp)	Nm (lb_f-ft)	A	V	Hz	rpm	rpm	Article No.
Line voltage 480 V 3 AC, Active Line Module									
2200	80	5 (6.71)	22 (16.2)	8.7	500	77.4	5050	10000	**1PH8083-■■F2■-....**
		6.7 (8.98)	29 (21.4)	13.7	435	76.4	7100	10000	**1PH8087-■■F2■-....**
	100	7.2 (9.66)	31 (22.9)	12.5	480	76.6	3000	9000	**1PH8101-■■F2■-....**
		10.3 (13.8)	45 (33.2)	19.7	430	76.8	5000	9000	**1PH8103-■■F2■-....**
		15.4 (20.7)	67 (49.4)	27.5	458	76.3	3500	9000	**1PH8105-■■F2■-....**
		19.8 (26.6)	86 (63.4)	42.6	381	76.3	3500	9000	**1PH8107-■■F2■-....**
	132	20.0 (26.8)	87 (64.2)	29	500	75.9	3000	8000	**1PH8131-■■F2■-....**
		24.0 (32.2)	104 (76.7)	37	495	74.8	4500	8000	**1PH8133-■■F2■-....**
		31 (41.6)	135 (99.6)	50	480	74.9	4500	8000	**1PH8135-■■F2■-....**
		39 (52.3)	169 (125)	66	456	74.9	4500	8000	**1PH8137-■■F2■-....**
		39 (52.3)	169 (125)	72	410	75.0	5000	8000	**1PH8138-■■F2■-....**
	160	53 (71.1)	230 (170)	83	460	74.4	4500	6500	**1PH8163-■■F2■-....**
		66 (88.5)	287 (212)	103	457	74.4	3500	6500	**1PH8165-■■F2■-....**
		75 (101)	326 (240)	116	470	74.5	3500	6500	**1PH8166-■■F2■-....**
2800	80	6 (8.05)	20 (14.8)	12	450	96.4	8900	10000	**1PH8083-■■G2■-....**
		8.5 (11.4)	29 (21.4)	17.8	420	97	9700	10000	**1PH8087-■■G2■-....**
	100	8.3 (11.1)	28 (20.7)	16.5	448	96.1	5000	9000	**1PH8101-■■G2■-....**
		12.8 (17.2)	44 (32.5)	22.5	470	96.2	4500	9000	**1PH8103-■■G2■-....**
		18 (24.1)	61 (45.0)	33.5	450	96	4500	9000	**1PH8105-■■G2■-....**
	132	24.0 (32.2)	82 (60.5)	39	472	95.2	6000	8000	**1PH8131-■■G2■-....**
		29.0 (38.9)	99 (73.0)	50	450	94.9	6000	8000	**1PH8133-■■G2■-....**
		33 (44.3)	113 (83.3)	57	462	94.7	6000	8000	**1PH8135-■■G2■-....**
	160	56 (75.1)	191 (141)	89	462	94.3	5500	6500	**1PH8163-■■G2■-....**
		68 (91.2)	232 (171)	100	494	94.2	3500	6500	**1PH8165-■■G2■-....**
		87 (117)	297 (219)	124	500	94.5	3500	6500	**1PH8166-■■G2■-....**
3900	100	13 (17.4)	32 (23.6)	29	397	132.4	13000	9000	**1PH8103-■■M2■-....**
		21 (28.2)	51 (37.6)	43.5	405	132.5	10000	9000	**1PH8105-■■M2■-....**
		21.6 (29.0)	53 (39.1)	58	329	131.9	18000	9000	**1PH8107-■■M2■-....**

For versions, see Article No. supplements and options.

For footnotes, see next page.

© Siemens AG 2017

Motor type (repeated)	Power factor	Magne-tizing current	Efficiency	Moment of inertia without holding brake	Weight without hold-ing brake, approx.	Terminal box	SINAMICS S120 Motor Module	
							Rated output current [3]	Internal air cooling For further components, see SINAMICS S120 drive system
	cos φ	I_μ	η	J			I_{rated}	
		A		kgm^2 (lb$_f$-in-s^2)	kg (lb)	Type	A	Article No.
1PH8083-..F...	0.82	3.8	0.850	0.0064 (0.06)	36 (79.4)	gk803	9	**6SL3120-■TE21-0AD .**
1PH8087-..F...	0.78	6.7	0.860	0.0089 (0.08)	44 (97.0)	gk803	18	**6SL3120-■TE21-8A■ .**
1PH8101-..F...	0.80	6.0	0.860	0.0138 (0.12)	51 (112)	gk823	18	**6SL3120-■TE21-8A■ .**
1PH8103-..F...	0.84	8.6	0.860	0.0172 (0.15)	60 (132)	gk823	30	**6SL3120-1TE23-0A■ .**
1PH8105-..F...	0.83	12.0	0.880	0.0252 (0.22)	74 (163)	gk823	30	**6SL3120-1TE23-0A■ .**
1PH8107-..F...	0.84	17.0	0.880	0.0289 (0.26)	83 (183)	gk823	45	**6SL3120-1TE24-5AA .**
1PH8131-..F...	0.90	7.2	0.910	0.0590 (0.52)	105 (231)	gk843	30	**6SL3120-1TE23-0A■ .**
1PH8133-..F...	0.86	14.1	0.930	0.0760 (0.67)	123 (271)	gk843	45	**6SL3120-1TE24-5AA .**
1PH8135-..F...	0.85	20.0	0.920	0.0940 (0.83)	141 (311)	gk843	60	**6SL3120-1TE26-0AA .**
1PH8137-..F...	0.85	25.5	0.920	0.1090 (0.96)	157 (346)	gk843	85	**6SL3120-1TE28-5AA .**
1PH8138-..F...	0.86	27.0	0.910	0.1090 (0.96)	157 (346)	gk843	85	**6SL3120-1TE28-5AA .**
1PH8163-..F...	0.88	26.5	0.920	0.2160 (1.91)	229 (505)	gk873	85	**6SL3120-1TE28-5AA .**
1PH8165-..F...	0.89	33.0	0.940	0.2320 (2.05)	264 (582)	gk873	132	**6SL3120-1TE31-3AA .**
1PH8166-..F...	0.89	34.4	0.940	0.2320 (2.05)	269 (593)	gk873	132	**6SL3120-1TE31-3AA .**
1PH8083-..G...	0.75	6.6	0.870	0.0064 (0.06)	36 (79.4)	gk803	18	**6SL3120-■TE21-8A■ .**
1PH8087-..G...	0.80	8.5	0.870	0.0089 (0.08)	44 (97.0)	gk803	18	**6SL3120-■TE21-8A■ .**
1PH8101-..G...	0.76	7.8	0.890	0.0138 (0.12)	51 (112)	gk823	18	**6SL3120-■TE21-8A■ .**
1PH8103-..G...	0.80	10.7	0.890	0.0172 (0.15)	60 (132)	gk823	30	**6SL3120-1TE23-0A■ .**
1PH8105-..G...	0.80	15.6	0.890	0.0252 (0.22)	74 (163)	gk823	45	**6SL3120-1TE24-5AA .**
1PH8131-..G...	0.86	15.0	0.920	0.0590 (0.52)	105 (231)	gk843	45	**6SL3120-1TE24-5AA .**
1PH8133-..G...	0.85	19.5	0.920	0.0760 (0.67)	123 (271)	gk843	60	**6SL3120-1TE26-0AA .**
1PH8135-..G...	0.84	23.1	0.920	0.0940 (0.83)	141 (311)	gk843	85	**6SL3120-1TE28-5AA .**
1PH8163-..G...	0.88	30.2	0.940	0.2160 (1.91)	229 (505)	gk873	132	**6SL3120-1TE31-3AA .**
1PH8165-..G...	0.88	33.5	0.940	0.2320 (2.05)	264 (582)	gk873	132	**6SL3120-1TE31-3AA .**
1PH8166-..G...	0.9	35.5	0.950	0.2320 (2.05)	269 (593)	gk873	132	**6SL3120-1TE31-3AA .**
1PH8103-..M...	0.79	13.0	0.900	0.0172 (0.15)	60 (132)	gk823	30	**6SL3120-1TE23-0A■ .**
1PH8105-..M...	0.81	18.6	0.910	0.0252 (0.22)	74 (163)	gk823	45	**6SL3120-1TE24-5AA .**
1PH8107-..M...	0.80	24.5	0.900	0.0289 (0.26)	83 (183)	gk823	60	**6SL3120-1TE26-0AA .**

Single Motor Module	**1**
Double Motor Module	**2**
Motor Module	
for continuous load with 200 % overload (C-type)	**C**
for highly dynamic, intermittent load cycles with 300 % overload (D-type)	**D**
Version status	

[1] n_2: Maximum permissible thermal speed at constant power.

[2] n_{max}: Maximum speed that must not be exceeded (applicable to Standard: 14th digit of article number B to H); for performance bearing (14th digit = "L"), the increased maximum speeds apply; limitations must be taken into consideration where necessary (e.g. with holding brake), see Article No. supplements.

[3] I_{rated}: Output current of the Motor Module at rated pulse frequency (see SINAMICS S120 drive system).
The rated motor data is valid for 4 kHz (SH 80 to 160).

© Siemens AG 2017

Selection and ordering data

Rated speed	Shaft height	Rated power	Rated torque	Rated current	Rated voltage	Rated frequency	Operating speed during field weakening, max. [1]	Speed, max. [2]	SIMOTICS M-1PH8 asynchronous motors Water cooling
n_{rated}	SH	P_{rated}	M_{rated}	I_{rated}	U_{rated}	f_{rated}	n_2	n_{max}	
rpm		kW (hp)	Nm (lb_f-ft)	A	V	Hz	rpm	rpm	Article No.
Line voltage 400 V 3 AC, Smart/Basic Line Module									
400	180	17 (22.8)	406 (299)	50	271	14.0	1500	5000	**1PH8184-■■B 2 ■-....**
		23 (30.8)	549 (405)	68	268	13.9	1800	5000	**1PH8186-■■B 2 ■-....**
	225	36 (48.3)	859 (634)	100	268	14.0	1400	4500	**1PH8224-■■B 2 ■-....**
		47 (63.0)	1122 (828)	130	264	14.0	1600	4500	**1PH8226-■■B 2 ■-....**
		58 (77.8)	1385 (1022)	154	272	13.9	1700	4500	**1PH8228-■■B 2 ■-....**
	280	71 (95.2)	1695 (1250)	170	295	13.8	2200	3300	**1PH8284-1■B 2 ■-....**
		89 (119)	2125 (1567)	210	300	13.7	2200	3300	**1PH8286-1■B 2 ■-....**
		109 (146)	2602 (1919)	260	295	13.7	2200	3300	**1PH8288-1■B 2 ■-....**
700	180	33 (44.3)	450 (332)	77	320	24.2	2500	5000	**1PH8184-■■C 2 ■-....**
		43 (57.7)	587 (433)	97	330	23.9	3000	5000	**1PH8186-■■C 2 ■-....**
	225	61 (81.8)	832 (614)	128	340	24.0	2100	4500	**1PH8224-■■C 2 ■-....**
		81 (109)	1105 (815)	184	310	23.9	2300	4500	**1PH8226-■■C 2 ■-....**
		96 (129)	1310 (966)	210	315	23.9	2500	4500	**1PH8228-■■C 2 ■-....**
	280	123 (165)	1678 (1238)	260	330	23.7	2200	3300	**1PH8284-1■C 2 ■-....**
		153 (205)	2087 (1539)	320	325	23.7	2200	3300	**1PH8286-1■C 2 ■-....**
		188 (252)	2565 (1892)	400	324	23.6	2200	3300	**1PH8288-1■C 2 ■-....**
1000	180	47 (63.0)	449 (331)	114	300	34.2	5000	5000	**1PH8184-■■D 2 ■-....**
		64 (85.8)	611 (451)	148	320	34.0	5000	5000	**1PH8186-■■D 2 ■-....**
	225	89 (119)	850 (627)	188	335	33.9	2800	4500	**1PH8224-■■D 2 ■-....**
		115 (154)	1098 (810)	235	340	33.9	2400	4500	**1PH8226-■■D 2 ■-....**
		141 (189)	1346 (993)	280	340	33.9	2300	4500	**1PH8228-■■D 2 ■-....**
	280	172 (231)	1643 (1212)	350	335	33.7	2200	3300	**1PH8284-1■D 2 ■-....**
		214 (287)	2044 (1508)	460	330	33.6	2200	3300	**1PH8286-1■D 2 ■-....**
		264 (354)	2521 (1859)	550	335	33.6	2200	3300	**1PH8288-1■D 2 ■-....**
1500	180	70 (93.9)	446 (329)	150	335	51.0	5000	5000	**1PH8184-■■F 2 ■-....**
		93 (68.6)	592 (437)	198	330	51.0	5000	5000	**1PH8186-■■F 2 ■-....**
	225	119 (160)	758 (559)	240	340	50.6	3500	4500	**1PH8224-■■F 2 ■-....**
		145 (194)	923 (681)	295	340	50.5	3700	4500	**1PH8226-■■F 2 ■-....**
		192 (257)	1222 (901)	390	340	50.5	3700	4500	**1PH8228-■■F 2 ■-....**
	280	227 (304)	1445 (1066)	445	343	50.4	2200	3300	**1PH8284-1■F 2 ■-....**
		281 (377)	1789 (1319)	540	343	50.4	2200	3300	**1PH8286-1■F 2 ■-....**
		345 (463)	2197 (1620)	660	345	50.3	2200	3300	**1PH8288-1■F 2 ■-....**
2500	180	95 (127)	363 (268)	196	340	85.2	5000	5000	**1PH8184-■■L 2 ■-....**
		120 (161)	458 (338)	250	335	83.9	5000	5000	**1PH8186-■■L 2 ■-....**
	225	153 (205)	584 (431)	310	340	83.8	3200	4500	**1PH8224-■■L 2 ■-....**
		185 (248)	707 (521)	380	335	83.8	3200	4500	**1PH8226-■■L 2 ■-....**
		226 (303)	863 (637)	455	340	83.7	3200	4500	**1PH8228-■■L 2 ■-....**

For versions, see Article No. supplements and options.

For footnotes, see next page.

© Siemens AG 2017

Motor type (repeated)	Power factor	Magne-tizing current	Efficiency	Moment of inertia without holding brake	Weight without hold-ing brake, approx.	Terminal box	SINAMICS S120 Motor Module	
							Rated output current [3]	Internal air cooling For further components, see SINAMICS S120 drive system
	cos φ	I_μ	η	J			I_{rated}	
		A		kgm^2 (lb$_f$-in-s^2)	kg (lb)	Type	A	Article No.
1PH8184- . . B . . .	0.87	28	0.831	0.489 (4.33)	340 (750)	1XB7322-P05	60	**6SL3120- 1TE26 -0AA.**
1PH8186- . . B . . .	0.86	42	0.845	0.652 (5.77)	410 (904)	1XB7322-P05	85	**6SL3120- 1TE28 -5AA.**
1PH8224- . . B . . .	0.91	37	0.858	1.452 (12.9)	610 (1345)	1XB7322-P05	132	**6SL3120- 1TE31 -3AA.**
1PH8226- . . B . . .	0.90	49	0.875	1.895 (16.8)	740 (1631)	1XB7322-P05	132	**6SL3120- 1TE31 -3AA.**
1PH8228- . . B . . .	0.90	62	0.886	2.354 (20.8)	870 (1918)	1XB7322-P05	200	**6SL3120- 1TE32 -0AA.**
1PH8284- 1. B . . .	0.89	70	0.914	4.21 (37.3)	1280 (2822)	1XB7322-P05	200	**6SL3120- 1TE32 -0AA.**
1PH8286- 1. B . . .	0.89	83	0.916	5.16 (45.7)	1490 (3285)	1XB7322-P05	210	**6SL3320- 1TE32 -1AA.**
1PH8288- 1. B . . .	0.89	110	0.925	6.29 (55.7)	1750 (3858)	1XB7422-P06	260	**6SL3320- 1TE32 -6AA.**
1PH8184- . . C . . .	0.89	33	0.872	0.489 (4.33)	340 (750)	1XB7322-P05	85	**6SL3120- 1TE28 -5AA.**
1PH8186- . . C . . .	0.86	49	0.898	0.652 (5.77)	410 (904)	1XB7322-P05	132	**6SL3120- 1TE31 -3AA.**
1PH8224- . . C . . .	0.89	48	0.914	1.452 (12.9)	610 (1345)	1XB7322-P05	132	**6SL3120- 1TE31 -3AA.**
1PH8226- . . C . . .	0.88	79	0.928	1.895 (16.8)	740 (1631)	1XB7322-P05	200	**6SL3120- 1TE32 -0AA.**
1PH8228- . . C . . .	0.90	82	0.930	2.354 (20.8)	870 (1918)	1XB7322-P05	210	**6SL3320- 1TE32 -1AA.**
1PH8284- 1. C . . .	0.87	108	0.945	4.21 (37.3)	1280 (2822)	1XB7422-P06	260	**6SL3320- 1TE32 -6AA.**
1PH8286- 1. C . . .	0.89	123	0.948	5.16 (45.7)	1490 (3285)	1XB7700-P02	380	**6SL3320- 1TE33 -8AA.**
1PH8288- 1. C . . .	0.88	172	0.952	6.29 (55.7)	1750 (3858)	1XB7700-P02	490	**6SL3320- 1TE35 -0AA.**
1PH8184- . . D . . .	0.88	45	0.904	0.489 (4.33)	340 (750)	1XB7322-P05	132	**6SL3120- 1TE31 -3AA.**
1PH8186- . . D . . .	0.85	78	0.920	0.652 (5.77)	410 (904)	1XB7322-P05	200	**6SL3120- 1TE32 -0AA.**
1PH8224- . . D . . .	0.87	79	0.937	1.452 (12.9)	610 (1345)	1XB7322-P05	200	**6SL3120- 1TE32 -0AA.**
1PH8226- . . D . . .	0.89	87	0.938	1.895 (16.8)	745 (1642)	1XB7422-P06	260	**6SL3320- 1TE32 -6AA.**
1PH8228- . . D . . .	0.91	98	0.943	2.354 (20.8)	875 (1929)	1XB7700-P02	310	**6SL3320- 1TE33 -1AA.**
1PH8284- 1. D . . .	0.88	144	0.957	4.21 (37.3)	1280 (2822)	1XB7700-P02	380	**6SL3320- 1TE33 -8AA.**
1PH8286- 1. D . . .	0.85	215	0.960	5.16 (45.7)	1490 (3285)	1XB7700-P02	490	**6SL3320- 1TE35 -0AA.**
1PH8288- 1. D . . .	0.86	251	0.962	6.29 (55.7)	1750 (3858)	1XB7700-P02	745	**6SL3320- 1TE37 -5AA.**
1PH8184- . . F . . .	0.87	66	0.928	0.489 (4.33)	340 (750)	1XB7322-P05	200	**6SL3120- 1TE32 -0AA.**
1PH8186- . . F . . .	0.88	85	0.935	0.652 (5.77)	410 (904)	1XB7322-P05	200	**6SL3120- 1TE32 -0AA.**
1PH8224- . . F . . .	0.89	87	0.951	1.452 (12.9)	615 (1356)	1XB7422-P06	260	**6SL3320- 1TE32 -6AA.**
1PH8226- . . F . . .	0.87	119	0.957	1.895 (16.8)	745 (1642)	1XB7700-P02	310	**6SL3320- 1TE33 -1AA.**
1PH8228- . . F . . .	0.87	169	0.959	2.354 (20.8)	875 (1929)	1XB7700-P02	490	**6SL3320- 1TE35 -0AA.**
1PH8284- 1. F . . .	0.89	161	0.964	4.21 (37.3)	1280 (2822)	1XB7700-P02	490	**6SL3320- 1TE35 -0AA.**
1PH8286- 1. F . . .	0.90	181	0.966	5.16 (45.7)	1490 (3285)	1XB7700-P02	745	**6SL3320- 1TE37 -5AA.**
1PH8288- 1. F . . .	0.90	234	0.967	6.29 (55.7)	1750 (3858)	1XB7700-P02	840	**6SL3320- 1TE38 -4AA.**
1PH8184- . . L . . .	0.87	75	0.945	0.489 (4.33)	340 (750)	1XB7322-P05	200	**6SL3120- 1TE32 -0AA.**
1PH8186- . . L . . .	0.88	109	0.948	0.652 (5.77)	415 (915)	1XB7422-P06	260	**6SL3320- 1TE32 -6AA.**
1PH8224- . . L . . .	0.87	113	0.961	1.452 (12.9)	615 (1356)	1XB7700-P02	310	**6SL3320- 1TE33 -1AA.**
1PH8226- . . L . . .	0.87	151	0.963	1.895 (16.8)	745 (1642)	1XB7700-P02	380	**6SL3320- 1TE33 -8AA.**
1PH8228- . . L . . .	0.87	181	0.964	2.354 (20.8)	875 (1929)	1XB7700-P02	490	**6SL3320- 1TE35 -0AA.**
						Version status		

[1] n_2: Maximum permissible thermal speed at constant power.

[2] n_{max}: Maximum speed that must not be exceeded (applicable to Standard: 14th digit of article number A to F); for performance bearing (14th digit = "L"), the increased maximum speeds apply; limitations must be taken into consideration where necessary (e.g. with holding brake), see Article No. supplements.

[3] I_{rated}: Output current of the Motor Module at rated pulse frequency (see SINAMICS S120 drive system).
The rated motor data is valid for 2 kHz (SH 180 to 280)

© Siemens AG 2017

Selection and ordering data

Rated speed	Shaft height	Rated power	Rated torque	Rated current	Rated voltage	Rated frequency	Operating speed during field weakening, max. [1]	Speed, max. [2]	SIMOTICS M-1PH8 asynchronous motors Water cooling
n_{rated}	SH	P_{rated}	M_{rated}	I_{rated}	U_{rated}	f_{rated}	n_2	n_{max}	
rpm		kW (hp)	Nm (lb_f-ft)	A	V	Hz	rpm	rpm	Article No.
Line voltage 400 V 3 AC, Active Line Module									
500	180	23 (30.8)	439 (324)	54	335	17.4	1800	5000	**1PH8184-■■B 2 ■-....**
		30 (40.2)	573 (423)	70	335	17.3	2200	5000	**1PH8186-■■B 2 ■-....**
	225	46 (61.7)	879 (648)	100	335	17.3	1500	4500	**1PH8224-■■B 2 ■-....**
		59 (79.1)	1127 (831)	128	330	17.3	1700	4500	**1PH8226-■■B 2 ■-....**
		72 (96.6)	1375 (1014)	150	340	17.2	1800	4500	**1PH8228-■■B 2 ■-....**
	280	89 (119)	1700 (1254)	172	365	17.1	2200	3300	**1PH8284-1■B 2 ■-....**
		111 (149)	2120 (1564)	205	375	17.0	2200	3300	**1PH8286-1■B 2 ■-....**
		136 (182)	2598 (1916)	260	365	17.0	2200	3300	**1PH8288-1■B 2 ■-....**
800	180	38 (51.0)	454 (335)	77	365	27.5	2900	5000	**1PH8184-■■C 2 ■-....**
		49 (65.7)	585 (431)	99	360	27.4	3500	5000	**1PH8186-■■C 2 ■-....**
	225	70 (93.9)	836 (617)	130	380	27.3	2300	4500	**1PH8224-■■C 2 ■-....**
		93 (125)	1110 (819)	186	350	27.2	2500	4500	**1PH8226-■■C 2 ■-....**
		110 (148)	1313 (968)	210	360	27.2	2700	4500	**1PH8228-■■C 2 ■-....**
	280	141 (189)	1683 (1241)	260	375	27.0	2200	3300	**1PH8284-1■C 2 ■-....**
		175 (235)	2089 (1541)	320	375	27.0	2200	3300	**1PH8286-1■C 2 ■-....**
		215 (288)	2567 (1893)	405	370	27.0	2200	3300	**1PH8288-1■C 2 ■-....**
1150	180	54 (72.4)	448 (330)	112	350	39.2	5000	5000	**1PH8184-■■D 2 ■-....**
		74 (99.2)	615 (454)	148	370	38.9	5000	5000	**1PH8186-■■D 2 ■-....**
	225	101 (135)	839 (619)	186	385	38.9	3000	4500	**1PH8224-■■D 2 ■-....**
		131 (176)	1088 (802)	230	390	38.9	2700	4500	**1PH8226-■■D 2 ■-....**
		161 (216)	1337 (986)	280	390	38.9	2500	4500	**1PH8228-■■D 2 ■-....**
	280	198 (266)	1644 (1213)	355	385	38.7	2200	3300	**1PH8284-1■D 2 ■-....**
		246 (330)	2043 (1507)	455	380	38.6	2200	3300	**1PH8286-1■D 2 ■-....**
		304 (408)	2525 (1862)	550	385	38.6	2300	3300	**1PH8288-1■D 2 ■-....**
1750	180	82 (110)	447 (330)	150	390	59.3	5000	5000	**1PH8184-■■F 2 ■-....**
		111 (149)	606 (447)	200	385	59.3	5000	5000	**1PH8186-■■F 2 ■-....**
	225	138 (185)	753 (555)	240	395	58.9	3800	4500	**1PH8224-■■F 2 ■-....**
		169 (227)	922 (680)	295	390	58.8	3900	4500	**1PH8226-■■F 2 ■-....**
		221 (296)	1206 (889)	390	390	58.8	3900	4500	**1PH8228-■■F 2 ■-....**
	280	265 (355)	1446 (1067)	445	400	58.7	2200	3300	**1PH8284-1■F 2 ■-....**
		328 (440)	1790 (1320)	540	400	58.7	2300	3300	**1PH8286-1■F 2 ■-....**
		403 (540)	2199 (1622)	670	400	58.7	2400	3300	**1PH8288-1■F 2 ■-....**
2900	180	102 (137)	336 (248)	182	395	97.5	5000	5000	**1PH8184-■■L 2 ■-....**
		135 (181)	445 (328)	245	385	97.3	5000	5000	**1PH8186-■■L 2 ■-....**
	225	164 (220)	540 (398)	285	395	97.1	3600	4500	**1PH8224-■■L 2 ■-....**
		204 (274)	672 (496)	360	390	97.1	3600	4500	**1PH8226-■■L 2 ■-....**
		237 (318)	780 (575)	415	395	97.0	3600	4500	**1PH8228-■■L 2 ■-....**

For versions, see Article No. supplements and options.

For footnotes, see next page.

© Siemens AG 2017

Motor type (repeated)	Power factor	Magne-tizing current	Efficiency	Moment of inertia without holding brake	Weight without hold-ing brake, approx.	Terminal box	SINAMICS S120 Motor Module	
							Rated output current [3]	Internal air cooling For further components, see SINAMICS S120 drive system
	cos φ	I_μ	η	J			I_{rated}	
		A		kgm^2 (lb$_f$-in-s^2)	kg (lb)	Type	A	Article No.
1PH8184- . . B . . .	0.86	27	0.850	0.489 (4.33)	340 (750)	1XB7322-P05	60	**6SL3120- 1TE26 -0AA.**
1PH8186- . . B . . .	0.85	43	0.868	0.652 (5.77)	410 (904)	1XB7322-P05	85	**6SL3120- 1TE28 -5AA.**
1PH8224- . . B . . .	0.90	38	0.883	1.452 (12.9)	610 (1345)	1XB7322-P05	132	**6SL3120- 1TE31 -3AA.**
1PH8226- . . B . . .	0.90	50	0.899	1.895 (16.8)	740 (1631)	1XB7322-P05	132	**6SL3120- 1TE31 -3AA.**
1PH8228- . . B . . .	0.90	63	0.908	2.354 (20.8)	870 (1918)	1XB7322-P05	200	**6SL3120- 1TE32 -0AA.**
1PH8284-1. B . . .	0.88	69	0.929	4.21 (37.3)	1280 (2822)	1XB7322-P05	200	**6SL3120- 1TE32 -0AA.**
1PH8286-1. B . . .	0.89	84	0.931	5.16 (45.7)	1490 (3285)	1XB7322-P05	210	**6SL3320- 1TE32 -1AA.**
1PH8288-1. B . . .	0.88	109	0.938	6.29 (55.7)	1750 (3858)	1XB7422-P06	260	**6SL3320- 1TE32 -6AA.**
1PH8184- . . C . . .	0.88	33	0.885	0.489 (4.33)	340 (750)	1XB7322-P05	85	**6SL3120- 1TE28 -5AA.**
1PH8186- . . C . . .	0.88	44	0.904	0.652 (5.77)	410 (904)	1XB7322-P05	132	**6SL3120- 1TE31 -3AA.**
1PH8224- . . C . . .	0.89	46	0.920	1.452 (12.9)	610 (1345)	1XB7322-P05	132	**6SL3120- 1TE31 -3AA.**
1PH8226- . . C . . .	0.88	77	0.934	1.895 (16.8)	740 (1631)	1XB7322-P05	200	**6SL3120- 1TE32 -0AA.**
1PH8228- . . C . . .	0.90	82	0.937	2.354 (20.8)	870 (1918)	1XB7322-P05	210	**6SL3320- 1TE32 -1AA.**
1PH8284-1. C . . .	0.88	108	0.950	4.21 (37.3)	1280 (2822)	1XB7422-P06	260	**6SL3320- 1TE32 -6AA.**
1PH8286-1. C . . .	0.88	126	0.953	5.16 (45.7)	1490 (3285)	1XB7700-P02	380	**6SL3320- 1TE33 -8AA.**
1PH8288-1. C . . .	0.87	172	0.956	6.29 (55.7)	1750 (3858)	1XB7700-P02	490	**6SL3320- 1TE35 -0AA.**
1PH8184- . . D . . .	0.87	46	0.915	0.489 (4.33)	340 (750)	1XB7322-P05	132	**6SL3120- 1TE31 -3AA.**
1PH8186- . . D . . .	0.84	80	0.927	0.652 (5.77)	410 (904)	1XB7322-P05	200	**6SL3120- 1TE32 -0AA.**
1PH8224- . . D . . .	0.86	79	0.944	1.452 (12.9)	610 (1345)	1XB7322-P05	200	**6SL3120- 1TE32 -0AA.**
1PH8226- . . D . . .	0.89	87	0.945	1.895 (16.8)	745 (1642)	1XB7422-P06	260	**6SL3320- 1TE32 -6AA.**
1PH8228- . . D . . .	0.90	98	0.948	2.354 (20.8)	875 (1929)	1XB7700-P02	310	**6SL3320- 1TE33 -1AA.**
1PH8284-1. D . . .	0.87	144	0.960	4.21 (37.3)	1280 (2822)	1XB7700-P02	380	**6SL3320- 1TE33 -8AA.**
1PH8286-1. D . . .	0.85	216	0.962	5.16 (45.7)	1490 (3285)	1XB7700-P02	490	**6SL3320- 1TE35 -0AA.**
1PH8288-1. D . . .	0.86	251	0.964	6.29 (55.7)	1750 (3858)	1XB7700-P02	745	**6SL3320- 1TE37 -5AA.**
1PH8184- . . F . . .	0.87	65	0.933	0.489 (4.33)	340 (750)	1XB7322-P05	200	**6SL3120- 1TE32 -0AA.**
1PH8186- . . F . . .	0.89	85	0.939	0.652 (5.77)	410 (904)	1XB7322-P05	200	**6SL3120- 1TE32 -0AA.**
1PH8224- . . F . . .	0.88	87	0.954	1.452 (12.9)	615 (1356)	1XB7422-P06	260	**6SL3320- 1TE32 -6AA.**
1PH8226- . . F . . .	0.88	116	0.959	1.895 (16.8)	745 (1642)	1XB7700-P02	310	**6SL3320- 1TE33 -1AA.**
1PH8228- . . F . . .	0.87	165	0.961	2.354 (20.8)	875 (1929)	1XB7700-P02	490	**6SL3320- 1TE35 -0AA.**
1PH8284-1. F . . .	0.89	161	0.966	4.21 (37.3)	1280 (2822)	1XB7700-P02	490	**6SL3320- 1TE35 -0AA.**
1PH8286-1. F . . .	0.90	182	0.967	5.16 (45.7)	1490 (3285)	1XB7700-P02	745	**6SL3320- 1TE37 -5AA.**
1PH8288-1. F . . .	0.90	232	0.968	6.29 (55.7)	1750 (3858)	1XB7700-P02	840	**6SL3320- 1TE38 -4AA.**
1PH8184- . . L . . .	0.87	77	0.945	0.489 (4.33)	340 (750)	1XB7322-P05	200	**6SL3120- 1TE32 -0AA.**
1PH8186- . . L . . .	0.87	108	0.948	0.652 (5.77)	415 (915)	1XB7422-P06	260	**6SL3320- 1TE32 -6AA.**
1PH8224- . . L . . .	0.88	114	0.961	1.452 (12.9)	615 (1356)	1XB7700-P02	310	**6SL3320- 1TE33 -1AA.**
1PH8226- . . L . . .	0.87	152	0.962	1.895 (16.8)	745 (1642)	1XB7700-P02	380	**6SL3320- 1TE33 -8AA.**
1PH8228- . . L . . .	0.87	182	0.963	2.354 (20.8)	875 (1929)	1XB7700-P02	490	**6SL3320- 1TE35 -0AA.**
						Version status		

[1] n_2: Maximum permissible thermal speed at constant power.

[2] n_{max}: Maximum speed that must not be exceeded (applicable to Standard: 14th digit of article number A to F); for performance bearing (14th digit = "L"), the increased maximum speeds apply; limitations must be taken into consideration where necessary (e.g. with holding brake), see Article No. supplements.

[3] I_{rated}: Output current of the Motor Module at rated pulse frequency (see SINAMICS S120 drive system).
The rated motor data is valid for 2 kHz (SH 180 to 280)

© Siemens AG 2017

Selection and ordering data

Rated speed	Shaft height	Rated power	Rated torque	Rated current	Rated voltage	Rated frequency	Operating speed during field weakening, max. [1]	Speed, max. [2]	SIMOTICS M-1PH8 asynchronous motors Water cooling
n_{rated}	SH	P_{rated}	M_{rated}	I_{rated}	U_{rated}	f_{rated}	n_2	n_{max}	
rpm		kW (hp)	Nm (lb_f-ft)	A	V	Hz	rpm	rpm	Article No.
Line voltage 480 V 3 AC, Smart/Basic/Active Line Module									
600	180	29 (38.9)	462 (341)	55	405	20.8	1800	5000	**1PH8184-■■B 2 ■-....**
		38 (51.0)	605 (446)	73	405	20.6	2500	5000	**1PH8186-■■B 2 ■-....**
	225	53 (71.1)	844 (623)	94	410	20.6	1900	4500	**1PH8224-■■B 2 ■-....**
		70 (93.9)	1114 (822)	122	410	20.5	2000	4500	**1PH8226-■■B 2 ■-....**
		85 (114)	1353 (998)	148	410	20.5	2100	4500	**1PH8228-■■B 2 ■-....**
	280	107 (143)	1703 (1256)	170	440	20.4	2200	3300	**1PH8284-1■B 2 ■-....**
		133 (178)	2117 (1561)	205	445	20.4	2200	3300	**1PH8286-1■B 2 ■-....**
		164 (220)	2610 (1925)	260	440	20.3	2200	3300	**1PH8288-1■B 2 ■-....**
1000	180	48 (64.4)	458 (338)	77	460	34.1	3100	5000	**1PH8184-■■C 2 ■-....**
		61 (81.8)	583 (430)	98	450	34.0	3700	5000	**1PH8186-■■C 2 ■-....**
	225	87 (117)	831 (613)	132	460	34.0	2500	4500	**1PH8224-■■C 2 ■-....**
		116 (156)	1108 (817)	184	440	33.9	2700	4500	**1PH8226-■■C 2 ■-....**
		138 (185)	1318 (972)	210	450	33.9	2900	4500	**1PH8228-■■C 2 ■-....**
	280	176 (236)	1681 (1240)	265	455	33.7	2200	3300	**1PH8284-1■C 2 ■-....**
		219 (294)	2091 (1542)	325	455	33.7	2200	3300	**1PH8286-1■C 2 ■-....**
		269 (361)	2569 (1895)	405	460	33.6	2200	3300	**1PH8288-1■C 2 ■-....**
1350	180	64 (85.8)	453 (334)	112	410	45.8	5000	5000	**1PH8184-■■D 2 ■-....**
		86 (115)	608 (448)	148	420	45.7	5000	5000	**1PH8186-■■D 2 ■-....**
	225	115 (154)	813 (600)	180	450	45.5	3400	4500	**1PH8224-■■D 2 ■-....**
		150 (201)	1061 (783)	225	460	45.5	3200	4500	**1PH8226-■■D 2 ■-....**
		184 (247)	1302 (960)	270	460	45.5	3000	4500	**1PH8228-■■D 2 ■-....**
	280	232 (311)	1641 (1210)	355	450	45.4	2200	3300	**1PH8284-1■D 2 ■-....**
		289 (388)	2044 (1508)	460	445	45.3	2300	3300	**1PH8286-1■D 2 ■-....**
		357 (479)	2525 (1862)	550	450	45.3	2400	3300	**1PH8288-1■D 2 ■-....**
2000	180	95 (127)	454 (335)	152	450	67.3	5000	5000	**1PH8184-■■F 2 ■-....**
		126 (169)	602 (444)	200	445	67.3	5000	5000	**1PH8186-■■F 2 ■-....**
	225	155 (208)	740 (546)	235	460	67.2	4200	4500	**1PH8224-■■F 2 ■-....**
		191 (256)	912 (673)	290	450	67.1	4100	4500	**1PH8226-■■F 2 ■-....**
		245 (329)	1170 (863)	380	450	67.1	4100	4500	**1PH8228-■■F 2 ■-....**
	280	303 (406)	1447 (1067)	445	455	67.0	2300	3300	**1PH8284-1■F 2 ■-....**
		375 (503)	1791 (1321)	550	455	67.0	2400	3300	**1PH8286-1■F 2 ■-....**
		460 (617)	2197 (1620)	670	455	67.0	2500	3300	**1PH8288-1■F 2 ■-....**
3400	180	100 (134)	281 (207)	158	460	114.0	5000	5000	**1PH8184-■■L 2 ■-....**
		121 (162)	340 (251)	200	455	113.5	5000	5000	**1PH8186-■■L 2 ■-....**
	225	164 (220)	461 (340)	255	460	114.0	4100	4500	**1PH8224-■■L 2 ■-....**
		199 (267)	559 (412)	310	460	114.0	4100	4500	**1PH8226-■■L 2 ■-....**
		237 (318)	666 (491)	370	460	114.0	4100	4500	**1PH8228-■■L 2 ■-....**

For versions, see Article No. supplements and options.

For footnotes, see next page.

© Siemens AG 2017

Motor type (repeated)	Power factor	Magne-tizing current	Efficiency	Moment of inertia without holding brake	Weight without hold-ing brake, approx.	Terminal box	SINAMICS S120 Motor Module	
							Rated output current [3]	Internal air cooling For further components, see SINAMICS S120 drive system
	cos φ	I_μ	η	J			I_{rated}	
		A		kgm^2 (lb$_f$-in-s^2)	kg (lb)	Type	A	Article No.
1PH8184- . . B . . .	0.86	28	0.869	0.489 (4.33)	340 (750)	1XB7322-P05	60	**6SL3120- 1TE26 -0AA.**
1PH8186- . . B . . .	0.84	44	0.883	0.652 (5.77)	410 (904)	1XB7322-P05	85	**6SL3120- 1TE28 -5AA.**
1PH8224- . . B . . .	0.87	40	0.908	1.452 (12.9)	610 (1345)	1XB7322-P05	132	**6SL3120- 1TE31 -3AA.**
1PH8226- . . B . . .	0.88	55	0.919	1.895 (16.8)	740 (1631)	1XB7322-P05	132	**6SL3120- 1TE31 -3AA.**
1PH8228- . . B . . .	0.88	64	0.923	2.354 (20.8)	870 (1918)	1XB7322-P05	200	**6SL3120- 1TE32 -0AA.**
1PH8284- 1. B . . .	0.88	71	0.939	4.21 (37.3)	1280 (2822)	1XB7322-P05	200	**6SL3120- 1TE32 -0AA.**
1PH8286- 1. B . . .	0.89	83	0.940	5.16 (45.7)	1490 (3285)	1XB7322-P05	210	**6SL3320- 1TE32 -1AA.**
1PH8288- 1. B . . .	0.88	111	0.946	6.29 (55.7)	1750 (3858)	1XB7422-P06	260	**6SL3320- 1TE32 -6AA.**
1PH8184- . . C . . .	0.86	34	0.905	0.489 (4.33)	340 (750)	1XB7322-P05	85	**6SL3120- 1TE28 -5AA.**
1PH8186- . . C . . .	0.87	44	0.920	0.652 (5.77)	410 (904)	1XB7322-P05	132	**6SL3120- 1TE31 -3AA.**
1PH8224- . . C . . .	0.89	44	0.931	1.452 (12.9)	610 (1345)	1XB7322-P05	132	**6SL3120- 1TE31 -3AA.**
1PH8226- . . C . . .	0.88	79	0.944	1.895 (16.8)	740 (1631)	1XB7322-P05	200	**6SL3120- 1TE32 -0AA.**
1PH8228- . . C . . .	0.89	83	0.946	2.354 (20.8)	870 (1918)	1XB7322-P05	210	**6SL3320- 1TE32 -1AA.**
1PH8284- 1. C . . .	0.88	102	0.956	4.21 (37.3)	1280 (2822)	1XB7422-P06	260	**6SL3320- 1TE32 -6AA.**
1PH8286- 1. C . . .	0.89	120	0.958	5.16 (45.7)	1490 (3285)	1XB7700-P02	380	**6SL3320- 1TE33 -8AA.**
1PH8288- 1. C . . .	0.87	171	0.961	6.29 (55.7)	1750 (3858)	1XB7700-P02	490	**6SL3320- 1TE35 -0AA.**
1PH8184- . . D . . .	0.87	46	0.924	0.489 (4.33)	340 (750)	1XB7322-P05	132	**6SL3120- 1TE31 -3AA.**
1PH8186- . . D . . .	0.86	73	0.933	0.652 (5.77)	410 (904)	1XB7322-P05	200	**6SL3120- 1TE32 -0AA.**
1PH8224- . . D . . .	0.86	79	0.950	1.452 (12.9)	610 (1345)	1XB7322-P05	200	**6SL3120- 1TE32 -0AA.**
1PH8226- . . D . . .	0.88	88	0.951	1.895 (16.8)	745 (1642)	1XB7422-P06	260	**6SL3320- 1TE32 -6AA.**
1PH8228- . . D . . .	0.90	99	0.954	2.354 (20.8)	875 (1929)	1XB7700-P02	310	**6SL3320- 1TE33 -1AA.**
1PH8284- 1. D . . .	0.87	143	0.963	4.21 (37.3)	1280 (2822)	1XB7700-P02	380	**6SL3320- 1TE33 -8AA.**
1PH8286- 1. D . . .	0.85	216	0.964	5.16 (45.7)	1490 (3285)	1XB7700-P02	490	**6SL3320- 1TE35 -0AA.**
1PH8288- 1. D . . .	0.86	249	0.966	6.29 (55.7)	1750 (3858)	1XB7700-P02	745	**6SL3320- 1TE37 -5AA.**
1PH8184- . . F . . .	0.85	68	0.938	0.489 (4.33)	340 (750)	1XB7322-P05	200	**6SL3120- 1TE32 -0AA.**
1PH8186- . . F . . .	0.87	89	0.938	0.652 (5.77)	410 (904)	1XB7322-P05	200	**6SL3120- 1TE32 -0AA.**
1PH8224- . . F . . .	0.86	90	0.958	1.452 (12.9)	615 (1356)	1XB7422-P06	260	**6SL3320- 1TE32 -6AA.**
1PH8226- . . F . . .	0.88	118	0.961	1.895 (16.8)	745 (1642)	1XB7700-P02	310	**6SL3320- 1TE33 -1AA.**
1PH8228- . . F . . .	0.86	169	0.963	2.354 (20.8)	875 (1929)	1XB7700-P02	490	**6SL3320- 1TE35 -0AA.**
1PH8284- 1. F . . .	0.89	160	0.967	4.21 (37.3)	1280 (2822)	1XB7700-P02	490	**6SL3320- 1TE35 -0AA.**
1PH8286- 1. F . . .	0.90	180	0.968	5.16 (45.7)	1490 (3285)	1XB7700-P02	745	**6SL3320- 1TE37 -5AA.**
1PH8288- 1. F . . .	0.90	230	0.969	6.29 (55.7)	1750 (3858)	1XB7700-P02	840	**6SL3320- 1TE38 -4AA.**
1PH8184- . . L . . .	0.84	76	0.944	0.489 (4.33)	340 (750)	1XB7322-P05	200	**6SL3120- 1TE32 -0AA.**
1PH8186- . . L . . .	0.81	110	0.942	0.652 (5.77)	415 (915)	1XB7422-P06	260	**6SL3320- 1TE32 -6AA.**
1PH8224- . . L . . .	0.84	113	0.959	1.452 (12.9)	615 (1356)	1XB7700-P02	310	**6SL3320- 1TE33 -1AA.**
1PH8226- . . L . . .	0.84	153	0.958	1.895 (16.8)	745 (1642)	1XB7700-P02	380	**6SL3320- 1TE33 -8AA.**
1PH8228- . . L . . .	0.84	180	0.959	2.354 (20.8)	875 (1929)	1XB7700-P02	490	**6SL3320- 1TE35 -0AA.**
						Version status		

[1] n_2: Maximum permissible thermal speed at constant power.

[2] n_{max}: Maximum speed that must not be exceeded (applicable to Standard: 14th digit of article number A to F); for performance bearing (14th digit = "L"), the increased maximum speeds apply; limitations must be taken into consideration where necessary (e.g. with holding brake), see Article No. supplements.

[3] I_{rated}: Output current of the Motor Module at rated pulse frequency (see SINAMICS S120 drive system).
The rated motor data is valid for 2 kHz (SH 180 to 280)

© Siemens AG 2017

Selection and ordering data

Rated speed	Shaft height	Rated power	Rated torque	Rated current	Rated voltage	Rated frequency	Operating speed during field weakening, max. [1]	Speed, max. [2]	**SIMOTICS M-1PH8 asynchronous motors Water cooling**
n_{rated}	SH	P_{rated}	M_{rated}	I_{rated}	U_{rated}	f_{rated}	n_2	n_{max}	
rpm		kW (hp)	Nm (lb_f-ft)	A	V	Hz	rpm	rpm	Article No.
Line voltage 690 V 3 AC, Basic Line Module									
400	280	68 (91.2)	1624 (1198)	89	555	13.7	2000	3300	**1PH8284-1■H2■-....**
		85 (114)	2029 (1497)	108	555	13.7	2000	3300	**1PH8286-1■H2■-....**
		105 (141)	2507 (1849)	134	555	13.7	2000	3300	**1PH8288-1■H2■-....**
700	280	119 (160)	1624 (1198)	136	605	23.7	2200	3300	**1PH8284-1■K2■-....**
		148 (198)	2019 (1489)	174	605	23.6	2200	3300	**1PH8286-1■K2■-....**
		182 (244)	2483 (1831)	205	605	23.7	2200	3300	**1PH8288-1■K2■-....**
1000	280	167 (224)	1595 (1176)	196	600	33.6	2200	3300	**1PH8284-1■U2■-....**
		208 (279)	1986 (1465)	260	570	33.6	2200	3300	**1PH8286-1■U2■-....**
		256 (343)	2445 (1803)	310	580	33.6	2200	3300	**1PH8288-1■U2■-....**
1500	280	220 (295)	1401 (1033)	250	590	50.4	2200	3300	**1PH8284-1■W2■-....**
		273 (366)	1738 (1282)	310	590	50.4	2200	3300	**1PH8286-1■W2■-....**
		335 (449)	2133 (1573)	375	590	50.3	2200	3300	**1PH8288-1■W2■-....**
Line voltage 690 V 3 AC, Active Line Module									
500	280	85 (114)	1624 (1198)	89	690	17.0	2000	3300	**1PH8284-1■H2■-....**
		106 (142)	2025 (1494)	108	690	17.0	2000	3300	**1PH8286-1■H2■-....**
		131 (176)	2502 (1845)	134	690	17.0	2000	3300	**1PH8288-1■H2■-....**
800	280	137 (184)	1635 (1206)	138	690	27.0	2200	3300	**1PH8284-1■K2■-....**
		170 (228)	2029 (1497)	176	690	27.0	2200	3300	**1PH8286-1■K2■-....**
		209 (280)	2495 (1840)	205	690	27.0	2200	3300	**1PH8288-1■K2■-....**
1150	280	192 (257)	1594 (1176)	198	690	38.6	2200	3300	**1PH8284-1■U2■-....**
		239 (321)	1985 (1464)	260	655	38.6	2200	3300	**1PH8286-1■U2■-....**
		295 (396)	2450 (1807)	310	665	38.6	2300	3300	**1PH8288-1■U2■-....**
1750	280	257 (345)	1401 (1033)	250	690	58.7	2200	3300	**1PH8284-1■W2■-....**
		318 (426)	1735 (1280)	305	690	58.7	2300	3300	**1PH8286-1■W2■-....**
		391 (524)	2134 (1574)	375	690	58.7	2400	3300	**1PH8288-1■W2■-....**

For versions, see Article No. supplements and options.

For footnotes, see next page.

© Siemens AG 2017

Motor type (repeated)	Power factor	Magne-tizing current	Efficiency	Moment of inertia	Weight, approx.	Terminal box	SINAMICS S120 Motor Module	
							Rated output current [3]	Internal air cooling For further components, see SINAMICS S120 drive system
	cos φ	I_μ	η	J			I_{rated}	
		A		kgm² (lbf-in-s²)	kg (lb)	Type	A	Article No.
1PH8284-1.H...	0.87	41	0.917	4.21 (37.3)	1280 (2822)	1XB7322-P05	100	**6SL3320-1TG31-0AA.**
1PH8286-1.H...	0.89	45	0.917	5.16 (45.7)	1490 (3285)	1XB7322-P05	120	**6SL3320-1TG31-2AA.**
1PH8288-1.H...	0.88	58	0.923	6.29 (55.7)	1750 (3858)	1XB7322-P05	150	**6SL3320-1TG31-5AA.**
1PH8284-1.K...	0.88	54	0.942	4.21 (37.3)	1280 (2822)	1XB7322-P05	150	**6SL3320-1TG31-5AA.**
1PH8286-1.K...	0.85	84	0.950	5.16 (45.7)	1490 (3285)	1XB7322-P05	215	**6SL3320-1TG32-2AA.**
1PH8288-1.K...	0.90	77	0.946	6.29 (55.7)	1750 (3858)	1XB7322-P05	260	**6SL3320-1TG32-6AA.**
1PH8284-1.U...	0.86	89	0.956	4.21 (37.3)	1280 (2822)	1XB7322-P05	215	**6SL3320-1TG32-2AA.**
1PH8286-1.U...	0.85	123	0.959	5.16 (45.7)	1490 (3285)	1XB7422-P06	330	**6SL3320-1TG33-3AA.**
1PH8288-1.U...	0.86	145	0.961	6.29 (55.7)	1750 (3858)	1XB7700-P02	410	**6SL3320-1TG34-1AA.**
1PH8284-1.W...	0.89	92	0.963	4.21 (37.3)	1280 (2822)	1XB7422-P06	330	**6SL3320-1TG33-3AA.**
1PH8286-1.W...	0.90	104	0.965	5.16 (45.7)	1490 (3285)	1XB7700-P02	410	**6SL3320-1TG34-1AA.**
1PH8288-1.W...	0.90	132	0.966	6.29 (55.7)	1750 (3858)	1XB7700-P02	465	**6SL3320-1TG34-7AA.**
1PH8284-1.H...	0.86	41	0.931	4.21 (37.3)	1280 (2822)	1XB7322-P05	100	**6SL3320-1TG31-0AA.**
1PH8286-1.H...	0.88	45	0.931	5.16 (45.7)	1490 (3285)	1XB7322-P05	120	**6SL3320-1TG31-2AA.**
1PH8288-1.H...	0.88	58	0.936	6.29 (55.7)	1750 (3858)	1XB7322-P05	150	**6SL3320-1TG31-5AA.**
1PH8284-1.K...	0.88	54	0.947	4.21 (37.3)	1280 (2822)	1XB7322-P05	150	**6SL3320-1TG31-5AA.**
1PH8286-1.K...	0.85	84	0.954	5.16 (45.7)	1490 (3285)	1XB7322-P05	215	**6SL3320-1TG32-2AA.**
1PH8288-1.K...	0.90	77	0.951	5.29 (46.8)	1750 (3858)	1XB7322-P05	260	**6SL3320-1TG32-6AA.**
1PH8284-1.U...	0.85	90	0.959	4.21 (37.3)	1280 (2822)	1XB7322-P05	215	**6SL3320-1TG32-2AA.**
1PH8286-1.U...	0.85	123	0.962	5.16 (45.7)	1490 (3285)	1XB7422-P06	330	**6SL3320-1TG33-3AA.**
1PH8288-1.U...	0.86	144	0.963	6.29 (55.7)	1750 (3858)	1XB7700-P02	410	**6SL3320-1TG34-1AA.**
1PH8284-1.W...	0.89	92	0.965	4.21 (37.3)	1280 (2822)	1XB7422-P06	330	**6SL3320-1TG33-3AA.**
1PH8286-1.W...	0.90	104	0.967	5.16 (45.7)	1490 (3285)	1XB7700-P02	410	**6SL3320-1TG34-1AA.**
1PH8288-1.W...	0.90	133	0.968	6.29 (55.7)	1750 (3858)	1XB7700-P02	465	**6SL3320-1TG34-7AA.**
						Version status		

9

1) n_2: Maximum permissible thermal speed at constant power.
2) n_{max}: Maximum speed that must not be exceeded (applicable to Standard: 14th digit of the article number A to D, E, and F).
3) I_{rated}: Output current of the Motor Module at rated pulse frequency (see SINAMICS S120 drive system).
The rated motor data is valid for 2 kHz (SH 180 to 280)

© Siemens AG 2017

Selection and ordering data

Rated speed n_{rated} rpm	Shaft height SH	Rated power P_{rated} kW (hp)	Rated torque M_{rated} Nm (lb_f-ft)	Rated current I_{rated} A	Rated voltage U_{rated} V	Rated frequency f_{rated} Hz	Operating speed, max. [1] $n_{max, Inv}$ rpm	Speed, max. [2] n_{max} rpm	**1PH8 synchronous motor Forced ventilation** Article No.
Line voltage 400 V 3 AC, Smart/Basic Line Module									
700	180	33 (44.3)	450 (332)	80	278	47.0	1450	3800	**1PH8184-■■C■■-....**
		44 (59.0)	600 (443)	108	269	47.0	1450	3800	**1PH8186-■■C■■-....**
	225	48 (64.4)	655 (483)	120	256	47.0	1450	3500	**1PH8224-■■C■■-....**
		64 (85.8)	873 (644)	170	238	47.0	1550	3500	**1PH8226-■■C■■-....**
		80 (107)	1091 (805)	200	254	47.0	1450	3500	**1PH8228-■■C■■-....**
1000	180	46 (61.7)	439 (324)	106	285	67.0	1950	3800	**1PH8184-■■D■■-....**
		62 (83.1)	592 (437)	148	275	67.0	2050	3800	**1PH8186-■■D■■-....**
	225	68 (91.2)	649 (479)	170	254	67.0	2050	3500	**1PH8224-■■D■■-....**
		91 (122)	869 (641)	215	265	67.0	1950	3500	**1PH8226-■■D■■-....**
		113 (152)	1079 (796)	265	271	67.0	1950	3500	**1PH8228-■■D■■-....**
1500	132	15.7 (21.1)	100 (73.8)	29	388	50.0	2550	4500	**1PH8131-■■F■■-....**
		19.9 (26.7)	127 (93.7)	44	316	50.0	3050	4500	**1PH8133-■■F■■-....**
		23.7 (31.8)	151 (111)	43	383	50.0	2450	4500	**1PH8135-■■F■■-....**
		30.6 (41.0)	195 (144)	60	356	50.0	2700	4500	**1PH8137-■■F■■-....**
	160	61 (81.8)	390 (288)	119	340	100	2600	4000	**1PH8165-■■F■■-....**
		69 (92.5)	435 (321)	133	345	100	2600	4000	**1PH8167-■■F■■-....**
	180	70 (93.9)	446 (329)	148	308	100	2700	3800	**1PH8184-■■F■■-....**
		93 (125)	592 (437)	215	282	100	2950	3800	**1PH8186-■■F■■-....**
	225	101 (135)	643 (474)	235	271	100	2900	3500	**1PH8224-■■F■■-....**
		134 (180)	853 (629)	295	288	100	2700	3500	**1PH8226-■■F■■-....**
		168 (225)	1070 (789)	395	270	100	2900	3500	**1PH8228-■■F■■-....**
2000	132	31.4 (42.1)	150 (111)	59	356	66.7	3500	4500	**1PH8135-■■G■■-....**
2500	132	25 (33.5)	96 (70.8)	44	371	83.3	4050	4500	**1PH8131-■■L■■-....**
		31.7 (42.5)	121 (89.2)	55	371	83.3	3950	4500	**1PH8133-■■L■■-....**
		48.4 (64.9)	185 (136)	83	371	83.3	3900	4500	**1PH8137-■■L■■-....**
	160	84 (113)	320 (236)	148	370	167	3900	4000	**1PH8165-■■L■■-....**
		95 (127)	360 (266)	177	350	167	4000	4000	**1PH8167-■■L■■-....**
3000	132	57.5 (77.1)	183 (135)	104	370	100	4500	4500	**1PH8137-■■M■■-....**

For versions, see Article No. supplements and options.

For footnotes, see next page.

© Siemens AG 2017

Motor type (repeated)	Static torque	Stall current	Effi-ciency	Moment of inertia without hold-ing brake	Weight, approx. without hold-ing brake	Terminal box	SINAMICS S120 Motor Module	
							Rated output current [3]	Internal air cooling For further components, see SINAMICS S120 drive system
	M_0	I_0	η	J			I_{rated}	
	Nm (lb_f-ft)	A		kgm^2 (lb_f-in-s^2)	kg (lb)	Type	A	Article No.
1PH8184-..C...	480 (354)	84	0.932	0.46 (4.07)	330 (728)	1XB7322-P05	85	**6SL3120-1TE28-5A A .**
1PH8186-..C...	640 (472)	115	0.924	0.60 (5.31)	400 (882)	1XB7322-P05	132	**6SL3120-1TE31-3A A .**
1PH8224-..C...	708 (522)	128	0.961	1.28 (11.3)	580 (1279)	1XB7322-P05	132	**6SL3120-1TE31-3A A .**
1PH8226-..C...	944 (696)	183	0.963	1.66 (14.7)	700 (1543)	1XB7322-P05	200	**6SL3120-1TE32-0A A .**
1PH8228-..C...	1180 (870)	213	0.965	2.02 (17.9)	810 (1786)	1XB7322-P05	200 [4]	**6SL3120-1TE32-0A A .**
1PH8184-..D...	480 (354)	115	0.937	0.46 (0.39)	330 (728)	1XB7322-P05	132	**6SL3120-1TE31-3A A .**
1PH8186-..D...	640 (472)	157	0.943	0.60 (5.31)	400 (882)	1XB7322-P05	200	**6SL3120-1TE32-0A A .**
1PH8224-..D...	708 (522)	183	0.964	1.28 (11.3)	580 (1279)	1XB7322-P05	200	**6SL3120-1TE32-0A A .**
1PH8226-..D...	944 (696)	233	0.967	1.66 (14.7)	700 (1543)	1XB7422-P06	260	**6SL3120-1TE32-6A A .**
1PH8228-..D...	1180 (870)	284	0.968	2.02 (17.9)	810 (1786)	1XB7422-P06	310	**6SL3320-1TE33-1A A .**
1PH8131-..F...	105 (77.4)	30	0.944	0.0446 (0.39)	85 (187)	gk833	30	**6SL3120-1TE23-0A■ .**
1PH8133-..F...	131 (96.6)	45	0.948	0.0600 (0.53)	103 (227)	gk833	45	**6SL3120-1TE24-5A A .**
1PH8135-..F...	158 (117)	44	0.952	0.0750 (0.66)	120 (265)	gk833	45	**6SL3120-1TE24-5A A .**
1PH8137-..F...	203 (150)	62	0.952	0.0885 (0.78)	136 (300)	gk833	60	**6SL3120-1TE26-0A A .**
1PH8165-..F...	440 (325)	126	0.940	0.2160 (1.91)	218 (481)	gk874	132	**6SL3120-1TE31-3A A .**
1PH8167-..F...	500 (369)	143	0.940	0.2440 (2.16)	240 (529)	gk874	132 [4]	**6SL3120-1TE31-3A A .**
1PH8184-..F...	480 (354)	157	0.951	0.46 (0.39)	330 (728)	1XB7322-P05	200	**6SL3120-1TE32-0A A .**
1PH8186-..F...	640 (472)	229	0.952	0.60 (5.31)	405 (893)	1XB7422-P06	260	**6SL3120-1TE32-6A A .**
1PH8224-..F...	708 (522)	256	0.965	1.28 (11.3)	580 (1279)	1XB7422-P06	260	**6SL3120-1TE32-6A A .**
1PH8226-..F...	944 (696)	320	0.967	1.66 (14.7)	700 (1543)	1XB7700-P02	310 [4]	**6SL3320-1TE33-1A A .**
1PH8228-..F...	1180 (870)	427	0.967	2.02 (17.9)	810 (1786)	1XB7700-P02	490	**6SL3320-1TE35-0A A .**
1PH8135-..G...	158 (117)	63	0.953	0.0750 (0.66)	120 (265)	gk833	60	**6SL3120-1TE26-0A A .**
1PH8131-..L...	105 (77.4)	48	0.948	0.0446 (0.39)	85 (187)	gk833	45	**6SL3120-1TE24-5A A .**
1PH8133-..L...	131 (96.6)	59	0.951	0.0600 (0.53)	103 (227)	gk833	60	**6SL3120-1TE26-0A A .**
1PH8137-..L...	203 (150)	89 [5]	0.954	0.0885 (0.78)	136 (300)	gk833	85	**6SL3120-1TE28-5A A .**
1PH8165-..L...	440 (325)	188	0.955	0.2160 (1.91)	218 (481)	gk874	200	**6SL3120-1TE32-0A A .**
1PH8167-..L...	500 (369)	230	0.955	0.2440 (2.16)	240 (529)	gk874	200	**6SL3120-1TE32-0A A .**
1PH8137-..M...	203 (150)	115 [5]	0.953	0.0885 (0.78)	136 (300)	gk833	132	**6SL3120-1TE31-3A A .**

Single Motor Module	**1**
Motor Module for continuous load with 200 % overload (C-type) for highly dynamic, intermittent load cycles with 300 % overload (D-type)	**C** **D**
Version status	

[1] $n_{max, Inv}$: Maximum permissible operating speed based on the voltage induced in the motor and the voltage stability of the Motor Module (without protective circuit).

[2] n_{max}: Maximum speed that must not be exceeded.

[3] I_{rated}: Output current of the Motor Module at rated pulse frequency (see SINAMICS S120 drive system).
The rated motor data is valid for 4 kHz (SH 80 to 160) or 2 kHz (SH 180 to 280).

[4] The output current of the Motor Module is lower than the rated motor current for the pulse frequency on which it is based.

[5] From approximately 85 A, the top power connector connection type is not possible (15th data position E to H).

© Siemens AG 2017

Selection and ordering data

Rated speed	Shaft height	Rated power	Rated torque	Rated current	Rated voltage	Rated frequency	Operating speed, max.[1]	Speed, max.[2]	**1PH8 synchronous motor Forced ventilation**
n_{rated}	SH	P_{rated}	M_{rated}	I_{rated}	U_{rated}	f_{rated}	$n_{max, Inv}$	n_{max}	
rpm		kW (hp)	Nm (lb_f-ft)	A	V	Hz	rpm	rpm	Article No.
Line voltage 400 V 3 AC, Active Line Module									
800	180	38 (51.0)	454 (335)	80	316	53.0	1450	3800	**1PH8184-■■C■■-....**
		50 (67.1)	597 (440)	108	306	53.0	1450	3800	**1PH8186-■■C■■-....**
	225	55 (73.8)	657 (485)	120	292	53.0	1450	3500	**1PH8224-■■C■■-....**
		73 (97.9)	871 (642)	170	271	53.0	1550	3500	**1PH8226-■■C■■-....**
		91 (122)	1086 (801)	198	290	53.0	1450	3500	**1PH8228-■■C■■-....**
1150	180	53 (71.1)	440 (325)	106	327	77.0	1950	3800	**1PH8184-■■D■■-....**
		71 (95.2)	590 (435)	148	315	77.0	2050	3800	**1PH8186-■■D■■-....**
	225	78 (105)	648 (478)	170	292	77.0	2050	3500	**1PH8224-■■D■■-....**
		104 (139)	864 (637)	215	304	77.0	1950	3500	**1PH8226-■■D■■-....**
		129 (173)	1071 (790)	260	311	77.0	1950	3500	**1PH8228-■■D■■-....**
1750	132	18 (24.1)	98 (72.3)	29	415	58.3	2550	4500	**1PH8131-■■F■■-....**
		23.1 (31.0)	126 (92.9)	43	366	58.3	3050	4500	**1PH8133-■■F■■-....**
		27.2 (36.5)	149 (110)	42	415	58.3	2450	4500	**1PH8135-■■F■■-....**
		35.6 (47.7)	194 (143)	59	412	58.3	2700	4500	**1PH8137-■■F■■-....**
	160	69 (92.5)	375 (277)	115	395	117	2600	4000	**1PH8165-■■F■■-....**
		77 (103)	420 (310)	128	400	117	2600	4000	**1PH8167-■■F■■-....**
	180	82 (110)	447 (330)	150	359	117	2700	3800	**1PH8184-■■F■■-....**
		109 (146)	595 (439)	215	328	117	2950	3800	**1PH8186-■■F■■-....**
	225	117 (157)	638 (471)	235	315	117	2900	3500	**1PH8224-■■F■■-....**
		156 (209)	851 (628)	295	335	117	2700	3500	**1PH8226-■■F■■-....**
		195 (261)	1064 (785)	390	314	117	2900	3500	**1PH8228-■■F■■-....**
2300	132	35.6 (47.7)	148 (109)	59	407	76.7	3500	4500	**1PH8135-■■G■■-....**
2800	132	27.7 (37.1)	95 (70.1)	44	415	93.3	4050	4500	**1PH8131-■■L■■-....**
		35.2 (47.2)	120 (88.5)	54	415	93.3	3950	4500	**1PH8133-■■L■■-....**
		53.4 (71.6)	182 (134)	82	415	93.3	3900	4500	**1PH8137-■■L■■-....**
	160	87 (117)	300 (221)	138	410	187	3900	4000	**1PH8165-■■L■■-....**
		98 (131)	335 (247)	164	385	187	4000	4000	**1PH8167-■■L■■-....**
3300	132	62.2 (83.4)	180 (133)	102	405	110	4500	4500	**1PH8137-■■M■■-....**

For versions, see Article No. supplements and options.

For footnotes, see next page.

© Siemens AG 2017

Motor type (repeated)	Static torque	Stall current	Efficiency	Moment of inertia without holding brake	Weight, approx. without holding brake	Terminal box	SINAMICS S120 Motor Module: Rated output current [3]	SINAMICS S120 Motor Module: Internal air cooling For further components, see SINAMICS S120 drive system
	M_0	I_0	η	J			I_{rated}	
	Nm (lb_f-ft)	A		kgm^2 (lb_f-in-s^2)	kg (lb)	Type	A	Article No.
1PH8184-..C...	480 (354)	84	0.926	0.46 (0.39)	330 (728)	1XB7322-P05	85	**6SL3120-1TE28-5A A .**
1PH8186-..C...	640 (472)	115	0.931	0.60 (5.31)	400 (882)	1XB7322-P05	132	**6SL3120-1TE31-3A A .**
1PH8224-..C...	708 (522)	128	0.962	1.28 (11.3)	580 (1279)	1XB7322-P05	132	**6SL3120-1TE31-3A A .**
1PH8226-..C...	944 (696)	183	0.965	1.66 (14.7)	700 (1543)	1XB7322-P05	200	**6SL3120-1TE32-0A A .**
1PH8228-..C...	1180 (870)	213	0.967	2.02 (17.9)	810 (1786)	1XB7322-P05	200 [4]	**6SL3120-1TE32-0A A .**
1PH8184-..D...	480 (354)	115	0.942	0.46 (0.39)	330 (728)	1XB7322-P05	132	**6SL3120-1TE31-3A A .**
1PH8186-..D...	640 (472)	157	0.948	0.60 (5.31)	400 (882)	1XB7322-P05	200	**6SL3120-1TE32-0A A .**
1PH8224-..D...	708 (522)	183	0.965	1.28 (11.3)	580 (1279)	1XB7322-P05	200	**6SL3120-1TE32-0A A .**
1PH8226-..D...	944 (696)	233	0.967	1.66 (14.7)	700 (1543)	1XB7422-P06	260	**6SL3120-1TE32-6A A .**
1PH8228-..D...	1180 (870)	284	0.969	2.02 (17.9)	810 (1786)	1XB7422-P06	310	**6SL3320-1TE33-1A A .**
1PH8131-..F...	105 (77.4)	30	0.947	0.0446 (0.39)	85 (187)	gk833	30	**6SL3120-1TE23-0A■ .**
1PH8133-..F...	131 (96.6)	45	0.950	0.0600 (0.53)	103 (227)	gk833	45	**6SL3120-1TE24-5A A .**
1PH8135-..F...	158 (117)	44	0.952	0.0750 (0.66)	120 (265)	gk833	45	**6SL3120-1TE24-5A A .**
1PH8137-..F...	203 (150)	62	0.953	0.0885 (0.78)	136 (300)	gk833	60	**6SL3120-1TE26-0A A .**
1PH8165-..F...	440 (325)	126	0.943	0.2160 (1.91)	218 (481)	gk874	132	**6SL3120-1TE31-3A A .**
1PH8167-..F...	500 (369)	143	0.943	0.2440 (2.16)	240 (529)	gk874	132	**6SL3120-1TE31-3A A .**
1PH8184-..F...	480 (354)	157	0.954	0.46 (0.39)	330 (728)	1XB7322-P05	200	**6SL3120-1TE32-0A A .**
1PH8186-..F...	640 (472)	229	0.955	0.60 (5.31)	405 (893)	1XB7422-P06	260	**6SL3120-1TE32-6A A .**
1PH8224-..F...	708 (522)	256	0.965	1.28 (11.3)	580 (1279)	1XB7422-P06	260	**6SL3120-1TE32-6A A .**
1PH8226-..F...	944 (696)	320	0.966	1.66 (14.7)	700 (1543)	1XB7700-P02	310 [4]	**6SL3320-1TE33-1A A .**
1PH8228-..F...	1180 (870)	427	0.966	2.02 (17.9)	810 (1786)	1XB7700-P02	490	**6SL3320-1TE35-0A A .**
1PH8135-..G...	158 (117)	63	0.953	0.0750 (0.66)	120 (265)	gk833	60	**6SL3120-1TE26-0A A .**
1PH8131-..L...	105 (77.4)	48	0.949	0.0446 (0.39)	85 (187)	gk833	45	**6SL3120-1TE24-5A A .**
1PH8133-..L...	131 (96.6)	59	0.952	0.0600 (0.53)	103 (227)	gk833	60	**6SL3120-1TE26-0A A .**
1PH8137-..L...	203 (150)	89 [5]	0.953	0.0885 (0.78)	136 (300)	gk833	85	**6SL3120-1TE28-5A A .**
1PH8165-..L...	440 (325)	188	0.959	0.2160 (1.91)	218 (481)	gk874	200	**6SL3120-1TE32-0A A .**
1PH8167-..L...	500 (369)	230	0.959	0.2440 (2.16)	240 (529)	gk874	200	**6SL3120-1TE32-0A A .**
1PH8137-..M...	203 (150)	115 [5]	0.952	0.0885 (0.78)	136 (300)	gk833	132	**6SL3120-1TE31-3A A .**

Single Motor Module	**1**
Motor Module for continuous load with 200 % overload (C-type) for highly dynamic, intermittent load cycles with 300 % overload (D-type)	**C** **D**
Version status	

[1] $n_{max, Inv}$: Maximum permissible operating speed based on the voltage induced in the motor and the voltage stability of the Motor Module (without protective circuit).

[2] n_{max}: Maximum speed that must not be exceeded.

[3] I_{rated}: Output current of the Motor Module at rated pulse frequency (see SINAMICS S120 drive system).
The rated motor data is valid for 4 kHz (SH 80 to 160) or 2 kHz (SH 180 to 280).

[4] The output current of the Motor Module is lower than the rated motor current for the pulse frequency on which it is based.

[5] From approximately 85 A, the top power connector connection type is not possible (15th data position E to H).

© Siemens AG 2017

Selection and ordering data

Rated speed	Shaft height	Rated power	Rated torque	Rated current	Rated voltage	Rated frequency	Operating speed, max.[1]	Speed, max.[2]	**1PH8 synchronous motor Forced ventilation**
n_{rated}	SH	P_{rated}	M_{rated}	I_{rated}	U_{rated}	f_{rated}	$n_{max, Inv}$	n_{max}	
rpm		kW (hp)	Nm (lb_f-ft)	A	V	Hz	rpm	rpm	Article No.
Line voltage 480 V 3 AC, Smart/Basic/Active Line Module									
1000	180	46 (61.7)	439 (324)	78	390	67.0	1450	3800	**1PH8184-■■C■■-....**
		62 (83.1)	592 (437)	108	379	67.0	1450	3800	**1PH8186-■■C■■-....**
	225	68 (91.2)	649 (479)	118	363	67.0	1450	3500	**1PH8224-■■C■■-....**
		91 (122)	869 (641)	170	338	67.0	1550	3500	**1PH8226-■■C■■-....**
		113 (152)	1079 (796)	198	361	67.0	1450	3500	**1PH8228-■■C■■-....**
1350	180	62 (83.1)	439 (324)	106	382	90.0	1950	3800	**1PH8184-■■D■■-....**
		83 (111)	587 (433)	146	368	90.0	2050	3800	**1PH8186-■■D■■-....**
	225	91 (122)	644 (475)	168	342	90.0	2050	3500	**1PH8224-■■D■■-....**
		121 (162)	856 (631)	215	356	90.0	1950	3500	**1PH8226-■■D■■-....**
		151 (202)	1068 (1432)	260	364	90.0	1950	3500	**1PH8228-■■D■■-....**
2000	132	19.9 (26.7)	95 (70.1)	29	449	66.7	2550	4500	**1PH8131-■■F■■-....**
		26.2 (35.1)	125 (92.2)	43	415	66.7	3050	4500	**1PH8133-■■F■■-....**
		30.2 (40.5)	144 (106)	42	449	66.7	2450	4500	**1PH8135-■■F■■-....**
		40 (53.6)	191 (141)	59	449	66.7	2700	4500	**1PH8137-■■F■■-....**
	160	74 (99.2)	355 (262)	110	445	133	2600	4000	**1PH8165-■■F■■-....**
		82 (110)	395 (291)	123	450	133	2600	4000	**1PH8167-■■F■■-....**
	180	86 (115)	411 (303)	138	404	133	2700	3800	**1PH8184-■■F■■-....**
		115 (154)	549 (405)	200	370	133	2950	3800	**1PH8186-■■F■■-....**
	225	118 (158)	563 (415)	210	355	133	2900	3500	**1PH8224-■■F■■-....**
		157 (211)	750 (553)	260	378	133	2700	3500	**1PH8226-■■F■■-....**
		196 (263)	936 (690)	345	355	133	2900	3500	**1PH8228-■■F■■-....**
2650	132	40.2 (53.9)	145 (107)	58	449	88.3	3500	4500	**1PH8135-■■G■■-....**
3000	132	29.5 (39.6)	94 (69.3)	43	449	100	4050	4500	**1PH8131-■■L■■-....**
		37.4 (50.2)	119 (87.8)	54	449	100	3950	4500	**1PH8133-■■L■■-....**
		56.9 (76.3)	181 (133)	81	449	100	3900	4500	**1PH8137-■■L■■-....**
	160	89 (119)	285 (210)	131	440	200	3900	4000	**1PH8165-■■L■■-....**
		99 (133)	315 (232)	155	410	200	4000	4000	**1PH8167-■■L■■-....**
3600	132	66.7 (89.4)	177 (131)	100	440	120	4500	4500	**1PH8137-■■M■■-....**

For versions, see Article No. supplements and options.

For footnotes, see next page.

© Siemens AG 2017

Motor type (repeated)	Static torque	Stall current	Efficiency	Moment of inertia without holding brake	Weight, approx. without holding brake	Terminal box	SINAMICS S120 Motor Module: Rated output current [3]	SINAMICS S120 Motor Module: Internal air cooling For further components, see SINAMICS S120 drive system
	M_0	I_0	η	J			I_{rated}	
	Nm (lb_f-ft)	A		kgm^2 (lb_f-in-s^2)	kg (lb)	Type	A	Article No.
1PH8184-..C...	480 (354)	84	0.937	0.46 (0.39)	330 (728)	1XB7322-P05	85	**6SL3120-1TE28-5A A .**
1PH8186-..C...	640 (472)	115	0.941	0.60 (5.31)	400 (882)	1XB7322-P05	132	**6SL3120-1TE31-3A A .**
1PH8224-..C...	708 (522)	128	0.965	1.28 (11.3)	580 (1279)	1XB7322-P05	132	**6SL3120-1TE31-3A A .**
1PH8226-..C...	944 (696)	183	0.967	1.66 (14.7)	700 (1543)	1XB7322-P05	200	**6SL3120-1TE32-0A A .**
1PH8228-..C...	1180 (870)	213	0.968	2.02 (17.9)	810 (1786)	1XB7322-P05	200 [4]	**6SL3120-1TE32-0A A .**
1PH8184-..D...	480 (354)	115	0.946	0.46 (0.39)	330 (728)	1XB7322-P05	132	**6SL3120-1TE31-3A A .**
1PH8186-..D...	640 (472)	157	0.952	0.60 (5.31)	400 (882)	1XB7322-P05	200	**6SL3120-1TE32-0A A .**
1PH8224-..D...	708 (522)	183	0.965	1.28 (11.3)	580 (1279)	1XB7322-P05	200	**6SL3120-1TE32-0A A .**
1PH8226-..D...	944 (696)	233	0.968	1.66 (14.7)	700 (1543)	1XB7422-P06	260	**6SL3120-1TE32-6A A .**
1PH8228-..D...	1180 (870)	284	0.968	2.02 (17.9)	810 (1786)	1XB7422-P06	310	**6SL3320-1TE33-1A A .**
1PH8131-..F...	105 (77.4)	30	0.948	0.0446 (0.39)	85 (187)	gk833	30	**6SL3120-1TE23-0A■ .**
1PH8133-..F...	131 (96.6)	45	0.951	0.0600 (0.53)	103 (227)	gk833	45	**6SL3120-1TE24-5A A .**
1PH8135-..F...	158 (117)	44	0.953	0.0750 (0.66)	120 (265)	gk833	45	**6SL3120-1TE24-5A A .**
1PH8137-..F...	203 (150)	62	0.954	0.0885 (0.78)	136 (300)	gk833	60	**6SL3120-1TE26-0A A .**
1PH8165-..F...	440 (325)	126	0.946	0.2160 (1.91)	440 (325)	gk874	132	**6SL3120-1TE31-3A A .**
1PH8167-..F...	500 (369)	143	0.946	0.2440 (2.16)	240 (529)	gk874	132	**6SL3120-1TE31-3A A .**
1PH8184-..F...	480 (354)	157	0.957	0.46 (0.39)	330 (728)	1XB7322-P05	200	**6SL3120-1TE32-0A A .**
1PH8186-..F...	640 (472)	229	0.956	0.60 (5.31)	405 (893)	1XB7422-P06	260	**6SL3120-1TE32-6A A .**
1PH8224-..F...	708 (522)	256	0.963	1.28 (11.3)	580 (1279)	1XB7422-P06	260	**6SL3120-1TE32-6A A .**
1PH8226-..F...	944 (696)	320	0.964	1.66 (14.7)	700 (1543)	1XB7700-P02	310 [4]	**6SL3320-1TE33-1A A .**
1PH8228-..F...	1180 (870)	427	0.964	2.02 (17.9)	810 (1786)	1XB7700-P02	490	**6SL3320-1TE35-0A A .**
1PH8135-..G...	158 (117)	63	0.952	0.0750 (0.66)	120 (265)	gk833	60	**6SL3120-1TE26-0A A .**
1PH8131-..L...	105 (77.4)	48	0.951	0.0446 (0.39)	85 (187)	gk833	45	**6SL3120-1TE24-5A A .**
1PH8133-..L...	131 (96.6)	59	0.952	0.0600 (0.53)	103 (227)	gk833	60	**6SL3120-1TE26-0A A .**
1PH8137-..L...	203 (150)	89 [5]	0.953	0.0885 (0.78)	136 (300)	gk833	85	**6SL3120-1TE28-5A A .**
1PH8165-..L...	440 (325)	188	0.960	0.2160 (1.91)	218 (481)	gk874	200	**6SL3120-1TE32-0A A .**
1PH8167-..L...	500 (369)	230	0.960	0.2440 (2.16)	240 (529)	gk874	200	**6SL3120-1TE32-0A A .**
1PH8137-..M...	203 (150)	115 [5]	0.950	0.0885 (0.78)	136 (300)	gk833	132	**6SL3120-1TE31-3A A .**

Single Motor Module	**1**
Motor Module for continuous load with 200 % overload (C-type) for highly dynamic, intermittent load cycles with 300 % overload (D-type)	**C** **D**
Version status	

[1] $n_{max, Inv}$: Maximum permissible operating speed based on the voltage induced in the motor and the voltage stability of the Motor Module (without protective circuit).

[2] n_{max}: Maximum speed that must not be exceeded.

[3] I_{rated}: Output current of the Motor Module at rated pulse frequency (see SINAMICS S120 drive system).
The rated motor data is valid for 4 kHz (SH 80 to 160) or 2 kHz (SH 180 to 280).

[4] The output current of the Motor Module is lower than the rated motor current for the pulse frequency on which it is based.

[5] From approximately 85 A, the top power connector connection type is not possible (15th data position E to H).

© Siemens AG 2017

Selection and ordering data

Rated speed	Shaft height	Rated power	Rated torque	Rated current	Rated voltage	Rated frequency	Operating speed, max. [1]	Speed, max. [2]	**1PH8 synchronous motor Water cooling**
n_{rated}	SH	P_{rated}	M_{rated}	I_{rated}	U_{rated}	f_{rated}	$n_{max, Inv}$	n_{max}	
rpm		kW (hp)	Nm (lb_f-ft)	A	V	Hz	rpm	rpm	Article No.
Line voltage 400 V 3 AC, Smart/Basic Line Module									
1500	132	17.6 (23.6)	112 (82.6)	40	326	50.0	3150	4500	**1PH8131-■■F2■-....**
		23.1 (31.0)	147 (108)	42	371	50.0	2450	4500	**1PH8133-■■F2■-....**
		29.7 (39.8)	189 (139)	57	384	50.0	2650	4500	**1PH8135-■■F2■-....**
		32.7 (43.9)	208 (153)	58	371	50.0	2350	4500	**1PH8137-■■F2■-....**
		44.9 (60.2)	286 (211)	118	316	50.0	3500	4500	**1PH8138-■■F2■-....**
	160	59 (79.1)	375 (277)	111	380	100	2400	4000	**1PH8164-■■F2■-....**
		74 (99.2)	475 (350)	148	355	100	2600	4000	**1PH8166-■■F2■-....**
		84 (113)	530 (391)	169	355	100	2600	4000	**1PH8168-■■F2■-....**
2000	132	30.6 (41.0)	146 (108)	57	383	66.7	3450	4500	**1PH8133-■■G2■-....**
		39 (52.3)	186 (137)	81	346	66.7	3800	4500	**1PH8135-■■G2■-....**
		44.4 (59.5)	212 (156)	85	371	66.7	3500	4500	**1PH8137-■■G2■-....**
		59.3 (79.5)	283 (209)	131	374	66.7	3900	4500	**1PH8138-■■G2■-....**
2500	132	28.5 (38.2)	109 (80.4)	57	359	83.3	4500	4500	**1PH8131-■■L2■-....**
	160	88 (118)	335 (247)	165	355	167	4000	4000	**1PH8164-■■L2■-....**
		102 (137)	390 (288)	188	380	167	3900	4000	**1PH8166-■■L2■-....**
		119 (160)	455 (336)	225	355	167	4000	4000	**1PH8168-■■L2■-....**
Line voltage 400 V 3 AC, Active Line Module									
1750	132	20.4 (27.4)	112 (82.6)	40	377	58.3	3150	4500	**1PH8131-■■F2■-....**
		26.4 (35.4)	144 (106)	42	415	58.3	2450	4500	**1PH8133-■■F2■-....**
		34.1 (45.7)	186 (137)	56	415	58.3	2650	4500	**1PH8135-■■F2■-....**
		37 (49.6)	202 (149)	58	415	58.3	2350	4500	**1PH8137-■■F2■-....**
		52.4 (70.3)	286 (211)	118	366	58.3	3500	4500	**1PH8138-■■F2■-....**
	160	67 (39.8)	365 (269)	108	440	117	2400	4000	**1PH8164-■■F2■-....**
		85 (62.7)	460 (339)	143	410	117	2600	4000	**1PH8166-■■F2■-....**
		94 (126)	510 (376)	164	410	117	2600	4000	**1PH8168-■■F2■-....**
2300	132	34.9 (46.8)	145 (107)	57	415	76.7	3450	4500	**1PH8133-■■G2■-....**
		44.3 (59.4)	184 (136)	80	395	76.7	3800	4500	**1PH8135-■■G2■-....**
		50.5 (67.7)	210 (155)	84	424	76.7	3500	4500	**1PH8137-■■G2■-....**
		67.7 (90.8)	281 (207)	130	415	76.7	3900	4500	**1PH8138-■■G2■-....**
2800	132	31.7 (42.5)	108 (79.7)	56	400	93.3	4500	4500	**1PH8131-■■L2■-....**
	160	93 (125)	315 (232)	156	395	187	4000	4000	**1PH8164-■■L2■-....**
		109 (146)	375 (277)	177	420	187	3900	4000	**1PH8166-■■L2■-....**
		123 (165)	420 (310)	210	395	187	4000	4000	**1PH8168-■■L2■-....**

For versions, see Article No. supplements and options.

For footnotes, see next page.

© Siemens AG 2017

Motor type (repeated)	Static torque	Stall current	Effi-ciency	Moment of inertia without hold-ing brake	Weight, approx. without hold-ing brake	Terminal box	**SINAMICS S120 Motor Module**	
							Rated output current [3]	Internal air cooling For further components, see SINAMICS S120 drive system
	M_0	I_0	η	J			I_{rated}	
	Nm (lb_f-ft)	A		kgm^2 (lb_f-in-s^2)	kg (lb)	Type	A	Article No.
1PH8131-..F...	115 (84.8)	41	0.946	0.0446 (0.39)	102 (225)	gk843	45	**6SL3120-1TE24-5AA.**
1PH8133-..F...	155 (114)	43	0.947	0.0600 (0.53)	120 (265)	gk843	45	**6SL3120-1TE24-5AA.**
1PH8135-..F...	196 (145)	59	0.950	0.0750 (0.66)	138 (304)	gk843	60	**6SL3120-1TE26-0AA.**
1PH8137-..F...	226 (167)	60	0.951	0.0885 (0.78)	153 (337)	gk843	60	**6SL3120-1TE26-0AA.**
1PH8138-..F...	290 (214)	120 [4]	0.958	0.0885 (0.78)	156 (344)	gk843	132	**6SL3120-1TE31-3AA.**
1PH8164-..F...	440 (325)	118	0.940	0.1750 (1.55)	224 (494)	gk874	132	**6SL3120-1TE31-3AA.**
1PH8166-..F...	550 (406)	159	0.940	0.2160 (1.91)	257 (567)	gk874	200	**6SL3120-1TE32-0AA.**
1PH8168-..F...	620 (457)	179	0.940	0.2440 (2.16)	279 (615)	gk874	200	**6SL3120-1TE32-0AA.**
1PH8133-..G...	155 (114)	61	0.950	0.0600 (0.53)	120 (265)	gk843	60	**6SL3120-1TE26-0AA.**
1PH8135-..G...	196 (145)	85 [4]	0.952	0.0750 (0.66)	138 (304)	gk843	85	**6SL3120-1TE28-5AA.**
1PH8137-..G...	226 (167)	90 [4]	0.954	0.0885 (0.78)	153 (337)	gk843	85	**6SL3120-1TE28-5AA.**
1PH8138-..G...	290 (214)	133 [4]	0.960	0.0885 (0.78)	156 (344)	gk843	132	**6SL3120-1TE31-3AA.**
1PH8131-..L...	115 (84.8)	60	0.948	0.0446 (0.39)	102 (225)	gk843	60	**6SL3120-1TE26-0AA.**
1PH8164-..L...	440 (325)	205	0.955	0.1750 (1.55)	224 (494)	gk874	200	**6SL3120-1TE32-0AA.**
1PH8166-..L...	550 (406)	240	0.955	0.2160 (1.91)	257 (567)	gk874	200	**6SL3120-1TE32-0AA.**
1PH8168-..L...	520 (384)	240	0.955	0.2440 (2.16)	279 (615)	gk874	260	**6SL3320-1TE32-1AA.**
1PH8131-..F...	115 (84.8)	41	0.947	0.0446 (0.39)	102 (225)	gk843	45	**6SL3120-1TE24-5AA.**
1PH8133-..F...	155 (114)	43	0.948	0.0600 (0.53)	120 (265)	gk843	45	**6SL3120-1TE24-5AA.**
1PH8135-..F...	196 (145)	59	0.951	0.0750 (0.66)	138 (304)	gk843	60	**6SL3120-1TE26-0AA.**
1PH8137-..F...	226 (167)	60	0.952	0.0885 (0.78)	153 (337)	gk843	60	**6SL3120-1TE26-0AA.**
1PH8138-..F...	290 (214)	120 [4]	0.959	0.0885 (0.78)	156 (344)	gk843	132	**6SL3120-1TE31-3AA.**
1PH8164-..F...	440 (325)	118	0.943	0.1750 (1.55)	224 (494)	gk874	132	**6SL3120-1TE31-3AA.**
1PH8166-..F...	550 (406)	159	0.943	0.2160 (1.91)	257 (567)	gk874	200	**6SL3120-1TE32-0AA.**
1PH8168-..F...	620 (457)	179	0.943	0.2440 (2.16)	279 (615)	gk874	200	**6SL3120-1TE32-0AA.**
1PH8133-..G...	155 (114)	61	0.951	0.0600 (0.53)	120 (265)	gk843	60	**6SL3120-1TE26-0AA.**
1PH8135-..G...	196 (145)	85 [4]	0.953	0.0750 (0.66)	138 (304)	gk843	85	**6SL3120-1TE28-5AA.**
1PH8137-..G...	226 (167)	90 [4]	0.956	0.0885 (0.78)	153 (337)	gk843	85	**6SL3120-1TE28-5AA.**
1PH8138-..G...	290 (214)	133 [4]	0.961	0.0885 (0.78)	156 (344)	gk843	132	**6SL3120-1TE31-3AA.**
1PH8131-..L...	115 (84.8)	60	0.949	0.0446 (0.39)	102 (225)	gk843	60	**6SL3120-1TE26-0AA.**
1PH8164-..L...	440 (325)	205	0.959	0.1750 (1.55)	224 (494)	gk874	200	**6SL3120-1TE32-0AA.**
1PH8166-..L...	550 (406)	240	0.959	0.2160 (1.91)	257 (567)	gk874	200	**6SL3120-1TE32-0AA.**
1PH8168-..L...	520 (384)	240	0.959	0.2440 (2.16)	279 (615)	gk874	260	**6SL3320-1TE32-1AA.**
						Version status		

[1] $n_{max, Inv}$: Maximum permissible operating speed based on the voltage induced in the motor and the voltage stability of the Motor Module (without protective circuit).

[2] n_{max}: Maximum speed that must not be exceeded.

[3] I_{rated}: Output current of the Motor Module at rated pulse frequency (see SINAMICS S120 drive system).
The rated motor data is valid for 4 kHz (SH 80 to 160).

[4] From approximately 85 A, the top power connector connection type is not possible (15th data position E to H).

© Siemens AG 2017

Selection and ordering data

Rated speed	Shaft height	Rated power	Rated torque	Rated current	Rated voltage	Rated frequency	Operating speed, max. [1]	Speed, max. [2]	**1PH8 synchronous motor Water cooling**
n_{rated}	SH	P_{rated}	M_{rated}	I_{rated}	U_{rated}	f_{rated}	$n_{max, Inv}$	n_{max}	
rpm		kW (hp)	Nm (lb_f-ft)	A	V	Hz	rpm	rpm	Article No.
Line voltage 480 V 3 AC, Smart/Basic Line Module									
2000	132	23.2 (31.1)	111 (81.9)	39	427	66.7	3150	4500	**1PH8131-■■F2■-....**
		29 (38.9)	139 (103)	41	449	66.7	2450	4500	**1PH8133-■■F2■-....**
		37.9 (50.8)	181 (133)	56	449	66.7	2650	4500	**1PH8135-■■F2■-....**
		40.6 (54.4)	194 (143)	57	449	66.7	2350	4500	**1PH8137-■■F2■-....**
		59.7 (80.1)	285 (210)	118	416	66.7	3500	4500	**1PH8138-■■F2■-....**
	160	70 (93.9)	330 (243)	105	500	133	2400	4000	**1PH8164-■■F2■-....**
		89 (119)	425 (313)	138	465	133	2600	4000	**1PH8166-■■F2■-....**
		100 (134)	480 (354)	157	465	133	2600	4000	**1PH8168-■■F2■-....**
2650	132	39.1 (52.4)	141 (104)	57	449	88.3	3450	4500	**1PH8133-■■G2■-....**
		50.5 (67.7)	182 (134)	79	452	88.3	3800	4500	**1PH8135-■■G2■-....**
		56.8 (76.2)	205 (151)	83	449	88.3	3500	4500	**1PH8137-■■G2■-....**
		76.3 (102)	275 (203)	130	449	88.3	3900	4500	**1PH8138-■■G2■-....**
3000	132	33.6 (45.1)	107 (78.9)	56	427	100.0	4500	4500	**1PH8131-■■L2■-....**
	160	96 (129)	305 (225)	150	420	200	4000	4000	**1PH8164-■■L2■-....**
		110 (148)	350 (258)	169	450	200	3900	4000	**1PH8166-■■L2■-....**
		125 (168)	395 (291)	197	420	200	4000	4000	**1PH8168-■■L2■-....**

For versions, see Article No. supplements and options.

For footnotes, see next page.

© Siemens AG 2017

Motor type (repeated)	Static torque	Stall current	Efficiency	Moment of inertia without holding brake	Weight, approx. without holding brake	Terminal box	**SINAMICS S120 Motor Module**	
							Rated output current [3]	Internal air cooling For further components, see SINAMICS S120 drive system
	M_0	I_0	η	J			I_{rated}	
	Nm (lb_f-ft)	A		kgm^2 (lb_f-in-s^2)	kg (lb)	Type	A	Article No.
1PH8131-..F...	115 (84.8)	41	0.948	0.0446 (0.39)	102 (225)	gk843	45	**6SL3120-1TE24-5AA.**
1PH8133-..F...	155 (114)	43	0.949	0.0600 (0.53)	120 (265)	gk843	45	**6SL3120-1TE24-5AA.**
1PH8135-..F...	196 (145)	59	0.952	0.0750 (0.66)	138 (304)	gk843	60	**6SL3120-1TE26-0AA.**
1PH8137-..F...	226 (167)	60	0.953	0.0885 (0.78)	153 (337)	gk843	60	**6SL3120-1TE26-0AA.**
1PH8138-..F...	290 (214)	120 [4]	0.960	0.0885 (0.78)	156 (344)	gk843	132	**6SL3120-1TE31-3AA.**
1PH8164-..F...	440 (325)	118	0.946	0.1750 (1.55)	224 (494)	gk874	132	**6SL3120-1TE31-3AA.**
1PH8166-..F...	550 (406)	159	0.946	0.2160 (1.91)	257 (567)	gk874	200	**6SL3120-1TE32-0AA.**
1PH8168-..F...	620 (457)	179	0.946	0.2440 (2.16)	279 (615)	gk874	200	**6SL3120-1TE32-0AA.**
1PH8133-..G...	155 (114)	61	0.952	0.0600 (0.53)	120 (265)	gk843	60	**6SL3120-1TE26-0AA.**
1PH8135-..G...	196 (145)	85 [4]	0.954	0.0750 (0.66)	138 (304)	gk843	85	**6SL3120-1TE28-5AA.**
1PH8137-..G...	226 (167)	90 [4]	0.958	0.0885 (0.78)	153 (337)	gk843	85	**6SL3120-1TE28-5AA.**
1PH8138-..G...	290 (214)	133 [4]	0.962	0.0885 (0.78)	156 (344)	gk843	132	**6SL3120-1TE31-3AA.**
1PH8131-..L...	115 (84.8)	60	0.950	0.0446 (0.39)	102 (225)	gk843	60	**6SL3120-1TE26-0AA.**
1PH8164-..L...	440 (325)	205	0.960	0.1750 (1.55)	224 (494)	gk874	200	**6SL3120-1TE32-0AA.**
1PH8166-..L...	550 (406)	240	0.960	0.2160 (1.91)	257 (567)	gk874	200	**6SL3120-1TE32-0AA.**
1PH8168-..L...	520 (384)	240	0.960	0.2440 (2.16)	279 (615)	gk874	260	**6SL3320-1TE32-1AA.**
						Version status		

9

[1] $n_{max, Inv}$: Maximum permissible operating speed based on the voltage induced in the motor and the voltage stability of the Motor Module (without protective circuit).

[2] n_{max}: Maximum speed that must not be exceeded.

[3] I_{rated}: Output current of the Motor Module at rated pulse frequency (see SINAMICS S120 drive system).
The rated motor data is valid for 4 kHz (SH 80 to 160).

[4] From approximately 85 A, the top power connector connection type is not possible (15th data position E to H).

© Siemens AG 2017

Selection and ordering data

Rated speed	Shaft height	Rated power	Rated torque	Rated current	Rated voltage	Rated frequency	Operating speed, max. [1]	Speed, max. [2]	**1PH8 synchronous motor Water cooling**
n_{rated}	SH	P_{rated}	M_{rated}	I_{rated}	U_{rated}	f_{rated}	$n_{max, Inv}$	n_{max}	
rpm		kW (hp)	Nm (lb_f-ft)	A	V	Hz	rpm	rpm	Article No.
Line voltage 400 V 3 AC, Smart/Basic Line Module									
700	180	42 (56.3)	573 (423)	100	303	47	1450	3800	**1PH8184-■■C2■-....**
		58 (77.8)	791 (583)	142	295	47	1450	3800	**1PH8186-■■C2■-....**
	225	72 (96.6)	982 (724)	180	275	47	1450	3500	**1PH8224-■■C2■-....**
		95 (127)	1296 (956)	255	255	47	1550	3500	**1PH8226-■■C2■-....**
		121 (162)	1651 (1218)	305	305	47	1450	3500	**1PH8228-■■C2■-....**
1000	180	61 (81.8)	583 (430)	140	313	67	1950	3800	**1PH8184-■■D2■-....**
		80 (107)	764 (563)	190	300	67	2050	3800	**1PH8186-■■D2■-....**
	225	101 (135)	964 (711)	255	275	67	2050	3500	**1PH8224-■■D2■-....**
		135 (181)	1289 (951)	325	285	67	1950	3500	**1PH8226-■■D2■-....**
		169 (227)	1614 (1190)	395	290	67	1950	3500	**1PH8228-■■D2■-....**
1500	180	90 (121)	573 (423)	190	334	100	2700	3800	**1PH8184-■■F2■-....**
		119 (160)	758 (559)	275	305	100	2950	3800	**1PH8186-■■F2■-....**
	225	151 (202)	961 (709)	355	290	100	2900	3500	**1PH8224-■■F2■-....**
		201 (270)	1280 (944)	445	305	100	2700	3500	**1PH8226-■■F2■-....**
		251 (337)	1598 (1179)	590	285	100	2900	3500	**1PH8228-■■F2■-....**
2500	180	127 (170)	485 (358)	260	328	167	3800	3800	**1PH8184-■■L2■-....**
		168 (225)	642 (474)	370	305	167	3800	3800	**1PH8186-■■L2■-....**
	225	182 (244)	695 (513)	365	320	167	3500	3500	**1PH8224-■■L2■-....**
		228 (306)	871 (642)	400	360	167	3500	3500	**1PH8226-■■L2■-....**
		270 (362)	1031 (760)	570	300	167	3500	3500	**1PH8228-■■L2■-....**
Line voltage 400 V 3 AC, Active Line Module									
800	180	48 (64.4)	573 (423)	102	342	53	1450	3800	**1PH8184-■■C2■-....**
		66 (88.5)	788 (581)	142	335	53	1450	3800	**1PH8186-■■C2■-....**
	225	81 (109)	81 (109)	178	310	53	1450	3500	**1PH8224-■■C2■-....**
		108 (145)	1289 (951)	255	287	53	1550	3500	**1PH8226-■■C2■-....**
		138 (185)	1647 (1215)	305	315	53	1450	3500	**1PH8228-■■C2■-....**
1150	180	70 (93.9)	581 (429)	140	386	77	1950	3800	**1PH8184-■■D2■-....**
		92 (123)	764 (563)	190	345	77	2050	3800	**1PH8186-■■D2■-....**
	225	115 (154)	955 (704)	250	310	77	2050	3500	**1PH8224-■■D2■-....**
		155 (208)	1287 (949)	325	325	77	1950	3500	**1PH8226-■■D2■-....**
		194 (260)	1611 (1188)	395	330	77	1950	3500	**1PH8228-■■D2■-....**
1750	180	103 (138)	562 (415)	186	386	117	2700	3800	**1PH8184-■■F2■-....**
		138 (185)	753 (555)	275	355	117	2950	3800	**1PH8186-■■F2■-....**
	225	175 (235)	955 (704)	355	335	117	2900	3500	**1PH8224-■■F2■-....**
		233 (312)	1271 (937)	440	355	117	2700	3500	**1PH8226-■■F2■-....**
		289 (388)	1577 (1163)	580	335	117	2900	3500	**1PH8228-■■F2■-....**
2900	180	140 (188)	461 (340)	250	375	193	3800	3800	**1PH8184-■■L2■-....**
		178 (239)	586 (432)	340	345	193	3800	3800	**1PH8186-■■L2■-....**
	225	191 (256)	629 (464)	335	370	193	3500	3500	**1PH8224-■■L2■-....**
		238 (319)	784 (578)	365	413	193	3500	3500	**1PH8226-■■L2■-....**
		283 (380)	932 (687)	520	345	193	3500	3500	**1PH8228-■■L2■-....**

For versions, see Article No. supplements and options.

For footnotes, see next page.

© Siemens AG 2017

Motor type (repeated)	Static torque	Stall current	Effi-ciency	Moment of inertia without hold-ing brake	Weight, approx. without hold-ing brake	Terminal box	**SINAMICS S120 Motor Module**	
							Rated output current [3]	Internal air cooling For further components, see SINAMICS S120 drive system
	M_0	I_0	η	J			I_{rated}	
	Nm (lb_f-ft)	A		kgm^2 (lb_f-in-s^2)	kg (lb)	Type	A	Article No.
1PH8184-..C...	590 (435)	103	0.919	0.457 (4.04)	330 (728)	1XB7322-P05	132	**6SL3120-1TE31-3AA.**
1PH8186-..C...	800 (590)	143	0.924	0.599 (5.30)	400 (882)	1XB7322-P05	200	**6SL3120-1TE32-0AA.**
1PH8224-..C...	1007 (743)	183	0.947	1.28 (11.3)	580 (428)	1XB7322-P05	200	**6SL3120-1TE32-0AA.**
1PH8226-..C...	1330 (981)	260	0.952	1.66 (14.7)	700 (1543)	1XB7422-P06	260	**6SL3320-1TE32-6AA.**
1PH8228-..C...	1680 (1239)	306	0.955	2.02 (17.9)	810 (1786)	1XB7700-P02	310	**6SL3320-1TE33-1AA.**
1PH8184-..D...	600 (443)	143	0.937	0.457 (4.04)	330 (728)	1XB7322-P05	200	**6SL3120-1TE32-0AA.**
1PH8186-..D...	800 (590)	196	0.943	0.599 (5.30)	400 (882)	1XB7322-P05	200	**6SL3120-1TE32-0AA.**
1PH8224-..D...	1007 (743)	262	0.956	1.28 (11.3)	580 (1279)	1XB7422-P06	260	**6SL3320-1TE32-6AA.**
1PH8226-..D...	1330 (981)	330	0.960	1.66 (14.7)	700 (1543)	1XB7700-P02	380	**6SL3320-1TE33-8AA.**
1PH8228-..D...	1680 (1239)	408	0.962	2.02 (17.9)	810 (1786)	1XB7700-P02	490	**6SL3320-1TE35-0AA.**
1PH8184-..F...	600 (443)	196	0.951	0.457 (4.04)	330 (728)	1XB7322-P05	200	**6SL3120-1TE32-0AA.**
1PH8186-..F...	800 (590)	285	0.952	0.599 (5.30)	405 (893)	1XB7700-P02	310	**6SL3320-1TE33-1AA.**
1PH8224-..F...	1007 (743)	367	0.962	1.28 (11.3)	580 (1279)	1XB7700-P02	380	**6SL3320-1TE33-8AA.**
1PH8226-..F...	1330 (981)	454	0.965	1.66 (14.7)	700 (1543)	1XB7700-P02	490	**6SL3320-1TE35-0AA.**
1PH8228-..F...	1680 (1239)	612	0.964	2.02 (17.9)	810 (1786)	1XB7700-P02	745	**6SL3320-1TE37-5AA.**
1PH8184-..L...	530 (391)	278	0.957	0.457 (4.04)	332 (732)	1XB7422-P06	260	**6SL3320-1TE32-6AA.**
1PH8186-..L...	720 (531)	405	0.957	0.599 (5.30)	405 (893)	1XB7700-P02	380	**6SL3320-1TE33-8AA.**
1PH8224-..L...	885 (653)	460	0.961	1.28 (11.3)	580 (1279)	1XB7700-P02	380	**6SL3320-1TE33-8AA.**
1PH8226-..L...	1170 (863)	532	0.962	1.66 (14.7)	700 (1543)	1XB7700-P02	380 [4]	**6SL3320-1TE33-8AA.**
1PH8228-..L...	1400 (1033)	762	0.963	2.02 (17.9)	810 (1786)	1XB7700-P02	745	**6SL3320-1TE37-5AA.**
1PH8184-..C...	590 (435)	103	0.926	0.457 (4.04)	330 (728)	1XB7322-P05	132	**6SL3120-1TE31-3AA.**
1PH8186-..C...	800 (590)	143	0.931	0.599 (5.30)	400 (882)	1XB7322-P05	200	**6SL3120-1TE32-0AA.**
1PH8224-..C...	1007 (743)	183	0.952	1.28 (11.3)	580 (1279)	1XB7322-P05	200	**6SL3120-1TE32-0AA.**
1PH8226-..C...	1330 (981)	260	0.956	1.66 (14.7)	700 (1543)	1XB7422-P06	260	**6SL3320-1TE32-6AA.**
1PH8228-..C...	1680 (1239)	306	0.958	2.02 (17.9)	810 (1786)	1XB7700-P02	310	**6SL3320-1TE33-1AA.**
1PH8184-..D...	600 (443)	143	0.942	0.457 (4.04)	330 (728)	1XB7322-P05	200	**6SL3120-1TE32-0AA.**
1PH8186-..D...	800 (590)	196	0.948	0.599 (5.30)	400 (882)	1XB7322-P05	200	**6SL3120-1TE32-0AA.**
1PH8224-..D...	1007 (743)	262	0.959	1.28 (11.3)	580 (1279)	1XB7422-P06	260	**6SL3320-1TE32-6AA.**
1PH8226-..D...	1330 (981)	330	0.962	1.66 (14.7)	700 (1543)	1XB7700-P02	380	**6SL3320-1TE33-8AA.**
1PH8228-..D...	1680 (1239)	408	0.964	2.02 (17.9)	810 (1786)	1XB7700-P02	490	**6SL3320-1TE35-0AA.**
1PH8184-..F...	600 (443)	196	0.954	0.457 (4.04)	330 (728)	1XB7322-P05	200	**6SL3120-1TE32-0AA.**
1PH8186-..F...	800 (590)	285	0.955	0.599 (5.30)	405 (893)	1XB7700-P02	310	**6SL3320-1TE33-1AA.**
1PH8224-..F...	1007 (743)	367	0.963	1.28 (11.3)	580 (1279)	1XB7700-P02	380	**6SL3320-1TE33-8AA.**
1PH8226-..F...	1330 (981)	454	0.965	1.66 (14.7)	700 (516)	1XB7700-P02	490	**6SL3320-1TE35-0AA.**
1PH8228-..F...	1680 (1239)	612	0.965	2.02 (17.9)	810 (1786)	1XB7700-P02	745	**6SL3320-1TE37-5AA.**
1PH8184-..L...	530 (391)	278	0.956	0.457 (4.04)	332 (732)	1XB7422-P06	260	**6SL3320-1TE32-6AA.**
1PH8186-..L...	720 (531)	405	0.955	0.599 (5.30)	405 (893)	1XB7700-P02	380	**6SL3320-1TE33-8AA.**
1PH8224-..L...	885 (653)	460	0.958	1.28 (11.3)	580 (1279)	1XB7700-P02	380	**6SL3320-1TE33-8AA.**
1PH8226-..L...	1170 (863)	532	0.958	1.66 (14.7)	700 (1543)	1XB7700-P02	380	**6SL3320-1TE33-8AA.**
1PH8228-..L...	1400 (1033)	762	0.958	2.02 (17.9)	810 (1786)	1XB7700-P02	745	**6SL3320-1TE37-5AA.**
						Version status		

[1] $n_{max, Inv}$: Maximum permissible operating speed based on the voltage induced in the motor and the voltage stability of the Motor Module (without protective circuit).

[2] n_{max}: Maximum speed that must not be exceeded.

[3] I_{rated}: Output current of the Motor Module at rated pulse frequency (see SINAMICS S120 drive system).
The rated motor data is valid for 2 kHz (SH 180 to 280).

[4] The output current of the Motor Module is lower than the rated motor current for the pulse frequency on which it is based.

© Siemens AG 2017

Selection and ordering data

Rated speed	Shaft height	Rated power	Rated torque	Rated current	Rated voltage	Rated frequency	Operating speed, max. [1]	Speed, max. [2]	**1PH8 synchronous motor Water cooling**
n_{rated}	SH	P_{rated}	M_{rated}	I_{rated}	U_{rated}	f_{rated}	$n_{max, Inv}$	n_{max}	
rpm		kW (hp)	Nm (lb_f-ft)	A	V	Hz	rpm	rpm	Article No.
Line voltage 480 V 3 AC, Smart/Basic/Active Line Module									
1000	180	60 (80.5)	573 (423)	102	423	67	1450	3800	**1PH8184-■■C2■-....**
		82 (110)	783 (578)	140	415	67	1450	3800	**1PH8186-■■C2■-....**
	225	101 (135)	964 (711)	178	385	67	1450	3500	**1PH8224-■■C2■-....**
		134 (180)	1280 (944)	255	357	67	1550	3500	**1PH8226-■■C2■-....**
		172 (231)	1642 (1211)	300	390	67	1450	3500	**1PH8228-■■C2■-....**
1350	180	82 (110)	580 (428)	140	417	90	1950	3800	**1PH8184-■■D2■-....**
		107 (143)	757 (558)	190	400	90	2050	3800	**1PH8186-■■D2■-....**
	225	135 (181)	955 (704)	250	365	90	2050	3500	**1PH8224-■■D2■-....**
		180 (241)	1273 (939)	320	380	90	1950	3500	**1PH8226-■■D2■-....**
		226 (303)	1599 (1179)	395	395	90	1950	3500	**1PH8228-■■D2■-....**
2000	180	110 (148)	525 (387)	176	434	133	2700	3800	**1PH8184-■■F2■-....**
		154 (207)	735 (542)	265	400	133	2950	3800	**1PH8186-■■F2■-....**
	225	186 (249)	888 (655)	330	380	133	2900	3500	**1PH8224-■■F2■-....**
		248 (333)	1184 (873)	410	390	133	2700	3500	**1PH8226-■■F2■-....**
		310 (416)	1480 (1092)	550	380	133	2900	3500	**1PH8228-■■F2■-....**
3200	180	142 (190)	424 (313)	230	405	213	3800	3800	**1PH8184-■■L2■-....**
		183 (245)	546 (403)	315	375	213	3800	3800	**1PH8186-■■L2■-....**
	225	196 (263)	585 (431)	310	400	213	3500	3500	**1PH8224-■■L2■-....**
		245 (329)	731 (539)	340	460	213	3500	3500	**1PH8226-■■L2■-....**
		291 (390)	868 (1914)	485	380	213	3500	3500	**1PH8228-■■L2■-....**

For versions, see Article No. supplements and options.

For footnotes, see next page.

© Siemens AG 2017

Motor type (repeated)	Static torque	Stall current	Effi-ciency	Moment of inertia without hold-ing brake	Weight, approx. without hold-ing brake	Terminal box	**SINAMICS S120 Motor Module**	
							Rated output current [3]	Internal air cooling For further components, see SINAMICS S120 drive system
	M_0	I_0	η	J			I_{rated}	
	Nm (lb_f-ft)	A		kgm² (lb_f-in-s²)	kg (lb)	Type	A	Article No.
1PH8184-..C...	590 (435)	103	0.937	0.457 (4.04)	330 (728)	1XB7322-P05	132	**6SL3120-1TE31-3AA.**
1PH8186-..C...	800 (590)	143	0.941	0.599 (5.30)	400 (882)	1XB7322-P05	200	**6SL3120-1TE32-0AA.**
1PH8224-..C...	1007 (743)	183	0.957	1.28 (11.3)	580 (1279)	1XB7322-P05	200	**6SL3120-1TE32-0AA.**
1PH8226-..C...	1330 (981)	260	0.960	1.66 (14.7)	700 (1543)	1XB7422-P06	260	**6SL3320-1TE32-6AA.**
1PH8228-..C...	1680 (1239)	306	0.961	2.02 (17.9)	810 (1786)	1XB7700-P02	310	**6SL3320-1TE33-1AA.**
1PH8184-..D...	600 (443)	143	0.946	0.457 (4.04)	330 (728)	1XB7322-P05	200	**6SL3120-1TE32-0AA.**
1PH8186-..D...	800 (590)	196	0.952	0.599 (5.30)	400 (882)	1XB7322-P05	200	**6SL3120-1TE32-0AA.**
1PH8224-..D...	1007 (743)	262	0.961	1.28 (11.3)	580 (1279)	1XB7422-P06	260	**6SL3320-1TE32-6AA.**
1PH8226-..D...	1330 (981)	330	0.964	1.66 (14.7)	700 (1543)	1XB7700-P02	380	**6SL3320-1TE33-8AA.**
1PH8228-..D...	1680 (1239)	408	0.965	2.02 (17.9)	810 (1786)	1XB7700-P02	490	**6SL3320-1TE35-0AA.**
1PH8184-..F...	600 (443)	196	0.957	0.457 (4.04)	330 (728)	1XB7322-P05	200	**6SL3120-1TE32-0AA.**
1PH8186-..F...	800 (590)	285	0.956	0.599 (5.30)	405 (893)	1XB7700-P02	310	**6SL3320-1TE33-1AA.**
1PH8224-..F...	1007 (743)	367	0.964	1.28 (11.3)	580 (1279)	1XB7700-P02	380	**6SL3320-1TE33-8AA.**
1PH8226-..F...	1330 (981)	454	0.965	1.66 (14.7)	700 (1543)	1XB7700-P02	490	**6SL3320-1TE35-0AA.**
1PH8228-..F...	1680 (1239)	612	0.964	2.02 (17.9)	810 (1786)	1XB7700-P02	745	**6SL3320-1TE37-5AA.**
1PH8184-..L...	530 (391)	278	0.954	0.457 (4.04)	332 (732)	1XB7422-P06	260	**6SL3320-1TE32-6AA.**
1PH8186-..L...	720 (531)	405	0.953	0.599 (5.30)	405 (893)	1XB7700-P02	380	**6SL3320-1TE33-8AA.**
1PH8224-..L...	885 (653)	460	0.954	1.28 (11.3)	580 (1279)	1XB7700-P02	380	**6SL3320-1TE33-8AA.**
1PH8226-..L...	1170 (863)	532	0.954	1.66 (14.7)	700 (1543)	1XB7700-P02	380	**6SL3320-1TE33-8AA.**
1PH8228-..L...	1400 (1033)	762	0.954	2.02 (17.9)	810 (1786)	1XB7700-P02	745	**6SL3320-1TE37-5AA.**
						Version status		

9

1) $n_{max, Inv}$: Maximum permissible operating speed based on the voltage induced in the motor and the voltage stability of the Motor Module (without protective circuit).

2) n_{max}: Maximum speed that must not be exceeded.

3) I_{rated}: Output current of the Motor Module at rated pulse frequency (see SINAMICS S120 drive system).
The rated motor data is valid for 2 kHz (SH 180 to 280).

© Siemens AG 2017

Article No. supplements for SIMOTICS M-1PH8 without holding brake > SH 80 to SH 160

Selection and ordering data

Data position of the Article No.	1	2	3	4	5	6	7		8	9	10	11	12		13	14	15	16		
Shaft height 80	**1**	**P**	**H**	**8**	**0**	**8**	**.**	**–**	■	■	■	■	■	**–**	■	■	■	**.**	**–**	**Z**
Shaft height 100	**1**	**P**	**H**	**8**	**1**	**0**	**.**	**–**	■	■	■	■	■	**–**	■	■	■	**.**	**–**	**Z**
Shaft height 132	**1**	**P**	**H**	**8**	**1**	**3**	**.**	**–**	■	■	■	■	■	**–**	■	■	■	**.**	**–**	**Z**
Shaft height 160	**1**	**P**	**H**	**8**	**1**	**6**	**.**	**–**	■	■	■	■	■	**–**	■	■	■	**.**	**–**	**Z**
Overall length (cannot be selected, determined by the choice of rated power)							**.**													
Asynchronous version									**1**											
Synchronous version (only shaft height 132 and 160)									**2**											
Encoder systems for motors without DRIVE-CLiQ interface																				
Without encoder [1]										**A**								**2**		
Absolute encoder EnDat 2048 S/R (encoder AM2048S/R) [2]										**E**								**2**		
Incremental encoder HTL 1024 S/R (encoder HTL1024S/R) [1) 3)]										**H**								**2**		
Incremental encoder HTL 2048 S/R (encoder HTL2048S/R) [1) 4)]										**J**								**2**		
Incremental encoder HTL 1024 S/R (encoder HTL1024S/R) with connection via additional terminal box [1) 3) 10)]										**W**								**2**		
Incremental encoder HTL 2048 S/R (encoder HTL2048S/R) with connection via additional terminal box [1) 4) 10)]										**Y**								**2**		
Incremental encoder sin/cos 1 V_{pp} 2048 S/R with C and D tracks (encoder IC2048S/R) [2]										**M**								**2**		
Incremental encoder sin/cos 1 V_{pp} 512 S/R without C and D tracks (encoder IN512S/R) [1) 5)]										**T**								**2**		
Encoder systems for motors with DRIVE-CLiQ interface																				
Absolute encoder 22-bit singleturn + 12-bit multiturn (encoder AM22DQ) [2]										**F**								**1**		
Incremental encoder 22-bit with commutation position (encoder IC22DQ) [2]										**D**								**1**		
Incremental encoder 20-bit without commutation position (encoder IN20DQ) [1) 5)]										**U**								**1**		
Rated speeds (380 V to 480 V 3 AC) (winding design)																				
400 rpm, 500 rpm, 600 rpm, 700 rpm											**B**									
1000 rpm, 1150 rpm, 1350 rpm, 1500 rpm											**D**									
1500 rpm, 1750 rpm, 2000 rpm, 2200 rpm											**F**									
2000 rpm, 2300 rpm, 2650 rpm, 2800 rpm											**G**									
2500 rpm, 2800 rpm, 3000 rpm											**L**									
3000 rpm, 3300 rpm, 3600 rpm, 3900 rpm											**M**									
Cooling / **Degree of protection**																				
Forced ventilation DE → NDE / IP55												**0**								
Forced ventilation NDE → DE / IP55												**1**								
Water cooling / IP65												**2**								
Type of construction																				
IM B3 (IM V5, IM V6, IM B6, IM B7, IM B8)													**0**							
IM B5 (IM V1, IM V3) [12]													**2**							
IM B35 (IM V15, IM V35) [6]													**3**							
Version status [11]																				
Special version (order codes required for options)																				**Z**

For the 13th to 16th digit of the Article No., see next page.

For footnotes, see next page.

© Siemens AG 2017

Selection and ordering data (continued)

Data position of the Article No.			1	2	3	4	5	6	7		8	9	10	11	12		13	14	15	16		
			1	**P**	**H**	**8**	**.**	**.**	**.**	**–**	■	■	■	■	■	**–**	■	■	■	**.**	**–**	**Z**
Shaft extension (DE)	**Balancing**																					
Plain shaft	–																**0**					
Feather key	Full-key																**1**					
Feather key	Half-key																**2**					
Bearing	**Vibration severity acc. to Siemens/EN 60034-14**	**Shaft and flange accuracy**																				
Standard with location bearing [13]	R/A	R																**B**				
Standard with location bearing [13]	S/A	R																**C**				
Standard with location bearing [1) 13]	SR/A	R																**D**				
Standard [13]	R/A	R																**G**				
Standard [13]	S/A	R																**H**				
Increased radial forces [13) 15]	R/A	R																**F**				
Performance [7]	SPECIAL/B	SPECIAL																**L**				
Advanced Lifetime [8) 13]	S/A	R																**Q**				
Power connection (looking at DE)																						
Terminal box	Cable entry	Signal connection																				
Top	Right	DE																	**A**			
Top	Left	DE																	**B**			
Top	NDE	Left																	**C**			
Top [14]	DE	Left																	**D**			
power connector																						
Top [9]	Right	DE																	**E**			
Top [9]	Left	DE																	**F**			
Top [9]	NDE	Left																	**G**			
Top [9]	DE	Left																	**H**			
Version status [11]																						
Special version (order codes required for options)																						**Z**

1) Only possible when 8th data position is "1" (Asynchronous version).
2) Limited to n_{max} = 12000 rpm.
3) Limited to n_{max} = 9000 rpm.
4) Limited to n_{max} = 4600 rpm.
5) Limited to n_{max} = 15000 rpm.
6) Only possible for shaft height 100, 132, and 160.
7) Only possible when 8th data position is "1" (Asynchronous version).
Shaft height 80: limited to n_{max} = 15000 rpm
Shaft height 100: limited to n_{max} = 12000 rpm
Shaft height 132: limited to n_{max} = 10000 rpm
Shaft height 160: Limited to n_{max} = 9000 rpm; not possible when 12th data position is "2" (IM B5).
8) Limited to n_{max} = 5000 rpm, shaft height 132: n_{max} = 4500 rpm, shaft height 160: n_{max} = 4000 rpm.
9) Power connector for shaft height 100 only possible up to a maximum stall current of I_0 = 36 A.
Power connector for shaft height 132 only possible up to a maximum stall current of I_0 = 85 A.
Power connector not possible for shaft height 160.
10) Only possible when 14th data position is: B, C, D, G, H, Q, F; and 15th data position is: A and B.
11) Directly coupled to 9th data position.
12) Not possible with shaft height 160 and 14th data position: L.
13) Not possible when 9th data position is: T, U.
14) Not possible with shaft height 160 and 8th data position is "2" or "4" (Synchronous version).
15) Limited to shaft height 100: n_{max} = 7000 rpm, shaft height 132: n_{max} = 6500 rpm, shaft height 160: n_{max} = 5300 rpm.

© Siemens AG 2017

Article No. supplements for SIMOTICS M-1PH8 without holding brake > SH 180 to SH 280

Selection and ordering data

Data position of the Article No.	1	2	3	4	5	6	7		8	9	10	11	12		13	14	15	16		
Shaft height 180	**1**	**P**	**H**	**8**	**1**	**8**	**.**	**–**	■	■	■	■	■	**–**	■	■	■	**.**	**–**	**Z**
Shaft height 225	**1**	**P**	**H**	**8**	**2**	**2**	**.**	**–**	■	■	■	■	■	**–**	■	■	■	**.**	**–**	**Z**
Shaft height 280 (only asynchronous variant with water cooling)	**1**	**P**	**H**	**8**	**2**	**8**	**.**	**–**	■	■	■	■	■	**–**	■	■	■	**.**	**–**	**Z**
Overall length (cannot be selected, determined by the choice of rated power)							**.**													
Asynchronous version									**1**											
Synchronous version									**2**											
Encoder systems for motors without DRIVE-CLiQ interface																				
Without encoder [1]										**A**								**2**		
Absolute encoder EnDat 2048 S/R (encoder AM2048S/R)										**E**								**2**		
Incremental encoder HTL 1024 S/R (encoder HTL1024S/R) [1]										**H**								**2**		
Incremental encoder HTL 2048 S/R (encoder HTL2048S/R) [1) 4)]										**J**								**2**		
Incremental encoder HTL 1024 S/R (encoder HTL1024S/R) with connection via additional terminal box [1]										**W**								**2**		
Incremental encoder HTL 2048 S/R (encoder HTL2048S/R) with connection via additional terminal box [1) 4)]										**Y**								**2**		
Incremental encoder sin/cos 1 V_{pp} 2048 S/R with C and D track (encoder IC2048S/R)										**M**								**2**		
Encoder systems for motors with DRIVE-CLiQ interface																				
Absolute encoder 22-bit singleturn + 12-bit multiturn (encoder AM22DQ)										**F**								**1**		
Incremental encoder 22-bit with commutation position (encoder IC22DQ)										**D**								**1**		
Rated speeds (380 V to 480 V 3 AC) (winding design)																				
400 rpm, 500 rpm, 600 rpm, 700 rpm											**B**									
700 rpm, 800 rpm, 1000 rpm, 1100 rpm											**C**									
1000 rpm, 1150 rpm, 1350 rpm, 1500 rpm											**D**									
1500 rpm, 1750 rpm, 2000 rpm, 2200 rpm											**F**									
2500 rpm, 2900 rpm, 3400 rpm											**L**									
Rated speeds (690 V 3 AC) only with shaft height 280 (winding design)																				
400 rpm, 500 rpm											**H**									
700 rpm, 800 rpm											**K**									
1000 rpm, 1150 rpm											**U**									
1500 rpm, 1750 rpm											**W**									
Cooling / **Degree of protection**																				
Forced ventilation, DE → NDE / IP55												**0**								
Forced ventilation, NDE → DE / IP55												**1**								
Water cooling / IP55												**2**								
Forced ventilation, DE → NDE (only asynchronous version) / IP23												**3**								
Forced ventilation, NDE → DE (only asynchronous version) / IP23												**4**								
Type of construction																				
Shaft height 180 / Shaft height 225 / Shaft height 280																				
IM B3 (IM B6, IM B7, IM B8, IM V6) / IM B3 (IM B6, IM B7, IM B8, IM V6) / IM B3 (IM V6)													**0**							
IM V5 / IM V5 / IM V5 [9]													**1**							
IM B5 with A450 flange (IM V3) [5] / IM B5 with A550 flange (IM V3) [6] / IM B5 with A660 flange (IM V3) [7) 9)]													**2**							
IM B35 with A450 flange (IM V35) / IM B35 with A550 flange (IM V35) / IM B35 with A660 flange (IM V35)													**3**							
IM V15 with A450 flange / IM V15 with A550 flange / IM V15 with flange A660 [9]													**5**							
Version status [10]																				
Special version (order codes required for options)																				**Z**

For the 13th to 16th digit of the Article No., see next page.

For footnotes, see next page.

© Siemens AG 2017

Selection and ordering data (continued)

Data position of the Article No.		1	2	3	4	5	6	7		8	9	10	11	12		13	14	15	16		
		1	**P**	**H**	**8**	**.**	**.**	**.**	**–**	■	■	■	■	■	**–**	■	■	■	**.**	**–**	**Z**
Shaft extension (DE)	**Balancing**																				
Plain shaft	–															**0**					
Feather key	Full-key															**1**					
Feather key	Half-key															**2**					
Bearing	**Vibration severity acc. to Siemens/EN 60034-14**	**Shaft and flange accuracy**																			
Standard	A	N															**A**				
Standard	R/A	R															**B**				
Increased radial forces	A	N															**E**				
Increased radial forces	R/A	R															**F**				
Also possible with shaft heights 180 and 225:																					
Standard	S/A	R															**C**				
Standard [1]	SR/A	R															**D**				
Performance [8]	SR/A	R															**L**				
Power connection (looking at DE)																					
Terminal box	Cable entry	Signal connection																			
Top	Right	DE																**A**			
Top	Left	DE																**B**			
Top	NDE	Right																**C**			
Top	DE	Right																**D**			
Version status [10]																					
Special version (order codes required for options)																					**Z**

9

1) Only possible when 8th data position is "1" (Asynchronous version).
4) Limited to n_{max} = 4600 rpm.
5) Limited to n_{max} = 3000 rpm, not possible when 14th data position is "L" (Performance).
6) Limited to n_{max} = 2500 rpm, not possible when 14th data position is "L" (Performance).
7) Limited to n_{max} = 2000 rpm.
8) Only possible when 8th data position is "1" (Asynchronous version); not possible when 12th data position is "2" (IM B5) and 11th data position is "3" and "4" (Forced ventilation, IP23).
Shaft height 180: limited to n_{max} = 7500 rpm;
Shaft height 225: limited to n_{max} = 6000 rpm.
9) Only possible when 14th data position is "A" or "B" (Standard bearing).
10) Directly coupled to 9th data position.

© Siemens AG 2017

Article No. supplements for SIMOTICS M-1PH8 without holding brake > SH 280

Selection and ordering data

Data position of the Article No.	1	2	3	4	5	6	7		8	9	10	11	12		13	14	15	16		
Shaft height 280 (forced ventilation)	**1**	**P**	**H**	**8**	**2**	**8**	**.**	**–**	**1**	■	■	■	■	**–**	■	■	■	**.**	**–**	**Z**
Overall length (cannot be selected, determined by the choice of rated power)							**.**													
Asynchronous version									**1**											
Encoder systems for motors without DRIVE-CLiQ interface																				
Without encoder										**A**								**2**		
Absolute encoder EnDat 2048 S/R (encoder AM2048S/R)										**E**								**2**		
Incremental encoder HTL 1024 S/R (encoder HTL1024S/R)										**H**								**2**		
Incremental encoder HTL 2048 S/R (encoder HTL2048S/R)										**J**								**2**		
Incremental encoder HTL 1024 S/R (encoder HTL1024S/R) with connection via additional terminal box [7]										**W**								**2**		
Incremental encoder HTL 2048 S/R (encoder HTL2048S/R) with connection via additional terminal box [7]										**Y**								**2**		
Incremental encoder sin/cos 1 V_{pp} 2048 S/R with C and D track (encoder IC2048S/R)										**M**								**2**		
Encoder systems for motors with DRIVE-CLiQ interface																				
Absolute encoder 22-bit singleturn + 12-bit multiturn (encoder AM22DQ)										**F**								**1**		
Incremental encoder 22-bit with commutation position (encoder IC22DQ)										**D**								**1**		
External encoder systems																				
Incremental encoder HTL 1024 S/R WITH HOLLOW SHAFT HOG 22 (Baumer-Hübner), prepared for mounting [1]										**G**								**2**		
Incremental encoder HTL 1024 S/R POG 10 (Baumer-Hübner), prepared for mounting [2]										**K**								**2**		
Rated speeds (380 V to 480 V 3 AC) (winding design)																				
400 rpm, 500 rpm, 600 rpm, 700 rpm											**B**									
700 rpm, 800 rpm, 1000 rpm, 1100 rpm											**C**									
1000 rpm, 1150 rpm, 1350 rpm, 1500 rpm											**D**									
1500 rpm, 1750 rpm, 2000 rpm, 2200 rpm											**F**									
Rated speeds (690 V 3 AC) (winding design)																				
400 rpm, 500 rpm											**H**									
700 rpm, 800 rpm											**K**									
1000 rpm, 1150 rpm											**U**									
1500 rpm, 1750 rpm											**W**									
Cooling / **Degree of protection**																				
Forced ventilation / IP55												**1**								
Forced ventilation / IP23												**4**								
Type of construction																				
IM B3 (IM V6)													**0**							
IM V5 [3) 6)]													**1**							
IM B5 with A660 flange (IM V3) [3) 6)]													**2**							
IM B35 with A660 flange (IM V35)													**3**							
IM V15 with A660 flange (IM V35) [3) 6)]													**5**							
Version status [8]																				
Special version (order codes required for options)																				**Z**

For the 13th to 16th digit of the Article No., see next page.

For footnotes, see next page.

© Siemens AG 2017

Selection and ordering data (continued)

Data position of the Article No.			1	2	3	4	5	6	7		8	9	10	11	12		13	14	15	16		
			1	**P**	**H**	**8**	**.**	**.**	**.**	**–**	**1**	■	■	■	■	**–**	■	■	■	**.**	**–**	**Z**
Shaft extension (DE)	**Balancing**																					
Plain shaft	–																**0**					
Feather key	Full-key																**1**					
Feather key	Half-key																**2**					
Bearing	**Vibration severity acc. to Siemens/EN 60034-1**	**Shaft and flange accuracy**																				
Standard	A	N																**A**				
Standard	R/A	R																**B**				
Increased radial forces	A	N																**E**				
Increased radial forces	R/A	R																**F**				
Power connection (looking at DE)																						
Terminal box	Cable entry	Signal connection	External fan																			
NDE right	Bottom	DE																	**U**			
			NDE top, air inlet from NDE, air-flow direction NDE → DE																			**–**
			NDE left, air inlet from NDE, air-flow direction NDE → DE																			**G00**
NDE left	Bottom	DE																	**V**			
			NDE top, air inlet from NDE, air-flow direction NDE → DE																			**–**
			NDE right, air inlet from NDE, air-flow direction NDE → DE																			**G02**
NDE top	Right	DE																	**W**			
			NDE left, air inlet from NDE, air-flow direction NDE → DE																			**G00**
			NDE right, air inlet from NDE, air-flow direction NDE → DE																			**G02**
DE top [4]	Right	NDE																	**X**			
			NDE top, air inlet from NDE, air-flow direction NDE → DE [4) 5)]																			**–**
			NDE left, air inlet from NDE, air-flow direction NDE → DE [4)]																			**G00**
			NDE right, air inlet from NDE, air-flow direction NDE → DE [4)]																			**G02**
Version status [8]																						
For other versions, see options																						**Z**

1) When ordering, also select option H75 (= encoder provided).
2) When ordering, also select options H56 (= procured by factory) or G80 (= provided).
3) n_{max} limited to 2000 rpm.
4) Only possible when 12th data position is "0" (IM B3) and "1" (IM V5).
5) Only possible for assignments with terminal box 1XB7712-P..
6) Only possible when 14th data position is "A" and "B" (standard bearing).
7) Possible for the following combinations:
12th data position is "0" or "1" with 16th data position is "W" or "X"
12th data position is "2", "3", or "5" with 16th data position "W".
8) Directly coupled to 9th data position.

© Siemens AG 2017

Article No. supplements for SIMOTICS M-1PH8 with holding brake > SH 80 to SH 160

Selection and ordering data

Data position of the Article No.	1	2	3	4	5	6	7		8	9	10	11	12		13	14	15	16		
Shaft height 80	**1**	**P**	**H**	**8**	**0**	**8**	**.**	**–**	■	■	■	■	■	**–**	■	■	■	**.**	**–**	**Z**
Shaft height 100	**1**	**P**	**H**	**8**	**1**	**0**	**.**	**–**	■	■	■	■	■	**–**	■	■	■	**.**	**–**	**Z**
Shaft height 132	**1**	**P**	**H**	**8**	**1**	**3**	**.**	**–**	■	■	■	■	■	**–**	■	■	■	**.**	**–**	**Z**
Shaft height 160	**1**	**P**	**H**	**8**	**1**	**6**	**.**	**–**	■	■	■	■	■	**–**	■	■	■	**.**	**–**	**Z**
Overall length (cannot be selected, determined by the choice of rated power)							**.**													
Asynchronous version with holding brake [1]									**3**											
Synchronous version with holding brake (only shaft heights 132 and 160) [1]									**4**											
Encoder systems for motors without DRIVE-CLiQ interface																				
Without encoder [2]										**A**								**2**		
Absolute encoder EnDat 2048 S/R (encoder AM2048S/R)										**E**								**2**		
Incremental encoder HTL 1024 S/R (encoder HTL1024S/R) [2]										**H**								**2**		
Incremental encoder HTL 2048 S/R (encoder HTL2048S/R) [2]										**J**								**2**		
Incremental encoder HTL 1024 S/R (encoder HTL1024S/R) with connection via additional terminal box [2] [9]										**W**								**2**		
Incremental encoder HTL 2048 S/R (encoder HTL2048S/R) with connection via additional terminal box [2] [9]										**Y**								**2**		
Incremental encoder sin/cos 1 V_{pp} 2048 S/R with C and D track (encoder IC2048S/R)										**M**								**2**		
Encoder systems for motors with DRIVE-CLiQ interface																				
Absolute encoder 22-bit singleturn + 12-bit multiturn (encoder AM22DQ)										**F**								**1**		
Incremental encoder 22-bit with commutation position (encoder IC22DQ)										**D**								**1**		
Rated speeds (380 V to 480 V 3 AC) (winding design)																				
400 rpm, 500 rpm, 600 rpm, 700 rpm											**B**									
1000 rpm, 1150 rpm, 1350 rpm, 1500 rpm											**D**									
1500 rpm, 1750 rpm, 2000 rpm, 2200 rpm											**F**									
2000 rpm, 2300 rpm, 2650 rpm, 2800 rpm											**G**									
2500 rpm, 2800 rpm, 3000 rpm											**L**									
3000 rpm, 3300 rpm, 3600 rpm, 3900 rpm											**M**									
Cooling / **Degree of protection**																				
Forced ventilation, DE → NDE / IP55												**0**								
Forced ventilation, NDE → DE / IP55												**1**								
Water cooling / IP55 [4]												**2**								
Type of construction																				
IM B5 (IM V1, IM V3) [5]													**2**							
IM B35 (IM V15, IM V35) [8]													**3**							
Version status [11]																				
Special version (order codes required for options)																				**Z**

For the 13th to 16th digit of the Article No., see next page.

For footnotes, see next page.

© Siemens AG 2017

Selection and ordering data (continued)

Data position of the Article No.			1	2	3	4	5	6	7		8	9	10	11	12		13	14	15	16		
			1	P	H	8	.	.	.	–	■	■	■	■	■	–	■	■	■	.	–	Z
Shaft extension (DE)	**Balancing**																					
Plain shaft	–																0					
Feather key	Half-key																2					
Bearing	**Vibration severity acc. to Siemens/EN 60034-14**	**Shaft and flange accuracy**																				
Standard	A	N																A				
Advanced Lifetime	A	N																P				
Power connection [6] (looking at DE)																						
Terminal box	Cable entry	Signal connection																				
Top	Right	DE																	A			
Top	Left	DE																	B			
Top	NDE	Left																	C			
Top [10]	DE	Left																	D			
Top [3) 7)]	Right	DE																	E			
Top [3) 7)]	Left	DE																	F			
Top [3) 7)]	NDE	Left																	G			
Top [3) 7)]	DE	Left																	H			
Version status [11]																						
Brake versions:																						
Brake supply voltage 230 V 1 AC, 50/60 Hz																						
Holding brake DE																						U60
Holding brake DE with microswitch																						U61
Holding brake DE with manual brake release lever																						U62
Holding brake DE with microswitch and manual brake release lever																						U63
Brake supply voltage 24 V DC																						
Holding brake DE																						U65
Holding brake DE with microswitch																						U66
Holding brake DE with manual brake release lever																						U67
Holding brake DE with microswitch and manual brake release lever																						U68
Z options that cannot be combined with holding brake DE: K18, V91, M03, M39																						

1) A U option must also be stated in the order to specify the holding brake version.
Shaft height 80: limited to n_{max} = 5000 rpm.
Shaft height 100: limited to n_{max} = 5000 rpm.
Shaft height 132: limited to n_{max} = 4500 rpm.
Shaft height 160: limited to n_{max} = 4000 rpm.

2) Only possible when 8th data position is "3" (Asynchronous version).

4) With holding brake, degree of protection is limited to IP55.

5) Not possible with shaft height 160.

6) Connection for holding brake is only possible via terminal box (top).

7) Power connector for motor only (not with holding brake):
Power connector for shaft height 100 only possible up to a maximum stall current of I_0 = 36 A.
Power connector for shaft height 132 only possible up to a maximum stall current of I_0 = 85 A.
Power connector not possible for shaft height 160.

8) Not possible for shaft height 80.

9) Only possible when 15th data position is: A and B.

10) Not possible with shaft height 160 and 8th data position is "2" or "4" (Synchronous version).

11) Directly coupled to 9th data position.

© Siemens AG 2017

Selection and ordering data

Data position of the Article No.	1	2	3	4	5	6	7		8	9	10	11	12		13	14	15	16		
Shaft height 180	**1**	**P**	**H**	**8**	**1**	**8**	**.**	**–**	■	■	■	■	■	**–**	■	■	■	**.**	**–**	**Z**
Shaft height 225	**1**	**P**	**H**	**8**	**2**	**2**	**.**	**–**	■	■	■	■	■	**–**	■	■	■	**.**	**–**	**Z**
Overall length							**.**													
Asynchronous version with holding brake [1]									**3**											
Synchronous version with holding brake [1]									**4**											
Encoder systems for motors without DRIVE-CLiQ interface																				
Without encoder [2]										**A**								**2**		
Absolute encoder EnDat 2048 S/R (encoder AM2048S/R)										**E**								**2**		
Incremental encoder HTL 1024 S/R (encoder HTL1024S/R) [2]										**H**								**2**		
Incremental encoder HTL 2048 S/R (encoder HTL2048S/R) [2]										**J**								**2**		
Incremental encoder HTL 1024 S/R (encoder HTL1024S/R) with connection via additional terminal box [2]										**W**								**2**		
Incremental encoder HTL 2048 S/R (encoder HTL2048S/R) with connection via additional terminal box [2]										**Y**								**2**		
Incremental encoder sin/cos 1 V_{pp} 2048 S/R with C and D track (encoder IC2048S/R)										**M**								**2**		
Encoder systems for motors with DRIVE-CLiQ interface																				
Absolute encoder 22-bit singleturn + 12-bit multiturn (encoder AM22DQ)										**F**								**1**		
Incremental encoder 22-bit with commutation position (encoder IC22DQ)										**D**								**1**		
Rated speeds (380 V to 480 V 3 AC) (winding design)																				
400 rpm, 500 rpm, 600 rpm, 700 rpm											**B**									
700 rpm, 800 rpm, 1000 rpm, 1100 rpm											**C**									
1000 rpm, 1150 rpm, 1350 rpm, 1500 rpm											**D**									
1500 rpm, 1750 rpm, 2000 rpm, 2200 rpm											**F**									
2500 rpm, 2900 rpm, 3400 rpm											**L**									
Cooling / **Degree of protection**																				
Forced ventilation, DE → NDE / IP55												**0**								
Forced ventilation, NDE → DE / IP55												**1**								
Water cooling / IP55												**2**								
Forced ventilation, NDE → DE (only asynchronous) / IP23												**4**								
Type of construction																				
IM B3 (IM B6, IM B7, IM B8)													**0**							
Shaft extension (DE) / **Balancing**																				
Feather key / Half-key															**2**					
Storage / **Vibration severity acc. to Siemens/EN 60034-14** / **Shaft and flange accuracy**																				
Standard / A / N																**A**				
Power connection [3] (looking at DE)																				
Terminal box / Cable entry / Signal connection																				
Top / Right / DE																	**A**			
Top / Left / DE																	**B**			
Top / NDE / Right																	**C**			
Top / DE / Right																	**D**			
Version status [4]																				
Brake versions:																				
Brake supply voltage 230 V 1 AC, 50/60 Hz																				
Holding brake DE with microswitch and manual brake release lever																				**U63**
Z options that cannot be combined with holding brake DE: K18, K90, L03, V92, M39																				

[1] A U option must also be stated in the order to specify the holding brake version.
Shaft height 180: limited to n_{max} = 3500 rpm.
Shaft height 225: limited to n_{max} = 3100 rpm.

[2] Only possible when 8th data position is "3" (Asynchronous version).

[3] Connection for holding brake is only possible via brake terminal box (top).

[4] Directly coupled to 9th data position.

© Siemens AG 2017

Options

Order code	Option description **-Z** must be appended to the Article No. to order a motor with options. The order code should also be specified for each additional required option (Order codes must not be repeated in plain text in the order)	For use with motors Shaft height 80 to 160	Shaft height 180 to 280	Shaft height 280 only for forced ventilation (11th data position "1" or "4")
A12	Additional PTC thermistor chain for alarm and tripping (only possible for version with terminal box)	✔	✔	✔
A25	Additional temperature sensor as reserve connected to signal terminal strip (only possible for version with terminal box)	✔	Standard	Standard
A72	2 Pt1000 temperature sensors for roller bearing temperature monitoring (DE and NDE)	–	✔	✔
B02	Factory test certificate in accordance with EN 10204 2.3 (for motor ordered)	✔	Standard	Standard
B35	Factory test certificate for vibration log	✔	✔ [1]	✔ [1]
B36	Factory test certificate for run-out log	✔	Only for SH 180 and SH 225	–
G00	External fan NDE left, air inlet at NDE (possible if 15th data position is U, W or X)	–	–	✔
G02	External fan NDE right, air inlet at NDE (possible if 15th data position is V, W or X)	–	–	✔
G06	External fan DE left, air inlet at NDE (possible if 11th digit = 1 and 15th digit = U, V, or W; possible if 11th digit = 4 and 15th digit = W)	–	–	✔
G07	External fan DE left, air inlet at DE (possible if 11th digit = 1 and 15th digit = U, V, or W; possible if 11th digit = 4 and 15th digit = W)	–	–	✔
G08	External fan DE right, air inlet at NDE (possible if 11th digit = 1 and 15th digit = U, V, or W; possible if 11th digit = 4 and 15th digit = W)	–	–	✔
G09	External fan DE right, air inlet at DE (possible if 11th digit = 1 and 15th digit = U, V, or W; possible if 11th digit = 4 and 15th digit = W)	–	–	✔
G11	External fan DE top, air inlet at DE (possible if 11th digit = 1 and 15th digit = U, V, or W; possible if 11th digit = 4 and 15th digit = W)	–	–	✔
G14	With air filter (only possible when 11th data position is "1" or "4")	Only for SH 132 and SH 160	✔	✔
G50	Nipple for SPM, with M8 adapter	–	✔	✔
G80	Mounting of a POG 10 incremental encoder supplied by customer (possible if 9th data position is "K")	–	–	✔
H56	Mounting of an incremental encoder POG 10 D 1024 (encoder HTL1024 S/R) (possible if 9th data position is "K")	–	–	✔
H75	Mounting of a hollow-shaft encoder HOG 22 supplied by customer (possible if 9th data position is "G")	–	–	✔
K08	Encoder connector or DRIVE-CLiQ mounted opposite (not possible when 15th data position is "X")	–	✔	✔
K09	Terminal box or power connector NDE right	Only for SH 100 [2] to SH 160	–	–
	Terminal box NDE right, cable entry DE, signal connection top (possible if 15th data position is "A")	–	✔	–
K10	Terminal box or power connector NDE left	Only for SH 100 [2] to SH 160	–	–
	Terminal box NDE left, cable entry DE, signal connection top (possible if 15th data position is "A")	–	✔	–
K16	Second shaft extension (d × l: 95 mm × 170 mm (3.74 in × 6.69 in)) (possible if 9th data position is "A" or "G" and 12th data position is "0" or "3")	–	–	✔
K17	Labyrinth seal DE for Performance version (possible if 12th data position is "5" and 14th data position is "L"	–	Only for SH 180	–
K18	Radial shaft sealing ring DE [3]	✔	✔	–
K40	Regreasing system, DE and NDE	–	Only for SH 180 and SH 225	Standard

–	Not possible
✔	Option available

[1] Not possible with shaft height 280 and when 14th data position is "E" or "F" (increased radial forces).

[2] Not possible when 12th data position is "2" (type of construction IM B5)

[3] Only appropriate if oil spray or oil vapor is occasionally deposited on the sealing ring.
Radial shaft sealing ring not possible when:
14th data position is "E", "F" or "L".

© Siemens AG 2017

Options (continued)

Order code	Option description **-Z** must be appended to the Article No. to order a motor with options. The order code should also be specified for each additional required option (Order codes must not be repeated in plain text in the order)	For use with motors Shaft height 80 to 160	Shaft height 180 to 280	Shaft height 280 only for forced ventilation (11th data position "1" or "4")
K45	Anti-condensation heating 230 V AC	–	✔	✔
K69	Pipe connection prepared NDE right (only possible with forced ventilation, not for G00 up to G11)	–	–	✔
K70	Pipe connection prepared NDE left (only possible with forced ventilation, not for G00 up to G11)	–	–	✔
K71	Pipe connection prepared NDE top (only possible with forced ventilation, not for G00 up to G11)	–	–	✔
K80	Axial pipe connection NDE (only possible for forced ventilation)	✔	Only for SH 180 and SH 225	Options **K69**, **K70**, **K71**
K83	Terminal box rotated through +90 degrees (possible in combination with option K09 or K10, or when 15th data position is "U", "V" or "W")	–	✔ 1)	✔
K84	Terminal box rotated through -90 degrees (possible in combination with option K09 or K10, or when 15th data position is "U", "V", "W" or "X")	–	✔ 1)	✔
K85	Terminal box rotated through +180 degrees (possible in combination with option K09 or K10, or when 15th data position is "U", "V", "W" or "X")	–	✔	✔
K90	Version with flange size A400 (possible if 12th data position is "2", "3" or "5")	–	Only for SH 180	–
L00	Replace terminal box (standard) with the next largest terminal box (note dimension implications in CAD CREATOR!)	–	✔	✔
L02	Screws locked with Loctite and reinforced fan version		–	Only when 11th data position is "1"
L03	Increased vibration stress	–	Only for SH 180 and SH 225	–
L12	Condensation drain hole	–	Standard for water cooling	Only when 11th data position is "1"
L27	NDE bearing in insulated version	–	Only for SH 180	Standard
L29	Enhanced corrosion protection for installation in industrial/marine climates	–	–	✔
L72	Shaft made of special steel (Note: Option results in longer delivery times)	–	–	✔
L74	Fan version with IP65 degree of protection 2)	✔	–	–
L75	Special fan version for 400 V 3 AC with IP65 degree of protection 2) (Note: Filter must be ordered with option Q14)	–	Only for SH 180 and SH 225	–
M03	Version for potentially explosive atmospheres Zone 2	✔	–	
M39	Version for potentially explosive atmospheres Zone 22	✔	Only for SH 180 and SH 225	–
M83	Additional back-off thread on motor feet (possible if 12th data position is "0" or "3")	–	–	✔
P00	Undrilled cable entry plate	–	✔	Not with 1XB7820-P00
P01	Cable entry plate 3 × M63 × 1.5	–	Only for 1XB7700-P02 1XB7712-P03	Only for 1XB7712-P03
P02	Cable entry plate 3 × M75 × 1.5	–	Only for 1XB7712-P03	Only for 1XB7712-P01 1XB7712-P03
P03	Cable entry plate 4 × M75 × 1.5	–	–	Only for 1XB7712-P01
P04	Cable entry plate 4 × M63 × 1.5	–	Only for 1XB7712-P03	Only for 1XB7712-P01 1XB7712-P03

–	Not possible
✔	Option available

1) Not possible for 1PH822 and terminal box 1XB7712-P03.

2) Regardless of the degree of protection, at high levels of atmospheric pollution, the fan must be cleaned.

© Siemens AG 2017

Options (continued)

Order code	Option description **-Z** must be appended to the Article No. to order a motor with options. The order code should also be specified for each additional required option (Order codes must not be repeated in plain text in the order)	For use with motors Shaft height 80 to 160	Shaft height 180 to 280	Shaft height 280 only for forced ventilation (11th data position "1" or "4")
Q00	Extra grounding terminals in terminal box	–	–	✔
Q12	Sealing air connection	✔	–	–
Q14	Filter for special fan (option L075) (only possible when 11th data position is "1" or "4")	–	Only for SH 180 and SH 225	–
Q21	Screw locked with Loctite	–	✔	–
Q31	Metal rating plate instead of adhesive label	✔	–	–
Q81	Higher preloading of bearing (only possible when 14th data position is "B" or "C"or "D")	✔		
U60	Holding brake 230 V	✔	–	–
U61	Holding brake 230 V with microswitch	✔	–	–
U62	Holding brake 230 V with manual brake release lever	✔	–	–
U63	Holding brake 230 V with microswitch and manual brake release lever	✔	Only for SH 180 and SH 225	–
U65	Holding brake 24 V DC	✔	–	–
U66	Holding brake 24 V DC with microswitch	✔	–	–
U67	Holding brake 24 V DC with manual brake release lever	✔	–	–
U68	Holding brake 24 V DC with microswitch and manual brake release lever	✔	–	–
V90	1FT7-compatible shaft extension (d × l: 42 mm × 110 mm (1.65 in x 4.33 in)) (note reduced radial forces!)	Only for SH 132	–	–
V91	1FT6-compatible shaft extension (d × l: 48 mm × 82 mm (1.89 in x 3.23 in)) (only possible when 14th data position is "B" or "C"or "D")	Only for SH 132	–	–
V92	1PH7184-/1PL6184-compatible shaft extension (d × l: 60 mm × 140 mm (2.36 in x 5.51 in))	–	Only for 1PH8184	–
Y82	Extra rating plate with customer specifications (plain text required)	–	✔	✔
Y84	Customer specifications on rating plate (max. 30 characters)	✔	✔	✔
–	Standard: Paint finish, anthracite RAL 7016	Standard	Standard	Standard
X01	Paint finish in RAL 9005 (Jet black)	✔	✔	✔
X02	Paint finish in RAL 9001 (Cream white)	✔	✔	✔
X03	Paint finish in RAL 6011 (Reseda green)	✔	✔	✔
X04	Paint finish in RAL 7032 (Pebble gray)	✔	✔	✔
X05	Paint finish in RAL 5015 (Sky blue)	✔	✔	✔
X06	Paint finish in RAL 1015 (Light ivory)	✔	✔	✔
X08	Paint finish in RAL 9006 (White aluminum)	✔	✔	✔
X11	Paint finish in RAL 6019 (Pastel green)	✔	✔	✔
X12	Paint finish in RAL 5010 (Gentian blue)	✔	✔	✔
X13	Paint finish in RAL 5024 (Pastel blue)	✔	✔	✔
X14	Paint finish in RAL 5017 (Traffic blue)	✔	✔	✔
X15	Paint finish in RAL 9010 (Pure white)	✔	✔	✔
X16	Paint finish in RAL 6018 (Yellow green)	✔	✔	✔
X17	Paint finish in RAL 5014 (Pigeon blue)	✔	✔	✔
X18	Paint finish in RAL 9018 (Papyrus white)	✔	✔	✔
X19	Paint finish in RAL 2004 (Pure orange)	✔	✔	✔
X20	Paint finish in HWS (Gray)	✔	✔	✔
X21	Paint finish in RAL 9003 (Signal white)	✔	✔	✔
X22	Paint finish in RAL 9002 (Gray white)	✔	✔	✔
X23	Paint finish in RAL 5005 (Signal blue)	✔	✔	✔

–	Not possible
✔	Option available

© Siemens AG 2017

Options (continued)

Order code	Option description **-Z** must be appended to the Article No. to order a motor with options. The order code should also be specified for each additional required option (Order codes must not be repeated in plain text in the order)	For use with motors Shaft height 80 to 160	Shaft height 180 to 280	Shaft height 280 only for forced ventilation (11th data position "1" or "4")
X24	Paint finish in RAL 7001 (Silver gray)	✔	✔	✔
X25	Paint finish in RAL 1000 (Green beige)	✔	✔	✔
X26	Paint finish in RAL 6017 (May green)	✔	✔	✔
X27	Paint finish in RAL 9023 (Pearl dark gray)	✔	✔	✔
X28	Paint finish in RAL 5009 (Azure blue)	✔	✔	✔
X29	Paint finish in RAL 7005 (Mouse gray)	✔	✔	✔
X30	Paint finish in RAL 1014 (Ivory)	✔	✔	✔
X31	Paint finish in RAL 5007 (Brillant blue)	✔	✔	✔
X44	Paint finish in RAL 1023 (Traffic yellow)	✔	✔	✔
X50	Paint finish in RAL 3004 (Purple red)	✔	✔	✔
X51	Paint finish in RAL 2003 (Pastel orange)	✔	✔	✔
X52	Paint finish in RAL 3000 (Flame red)	✔	✔	✔
X53	Paint finish in RAL 7035 (Light gray)	✔	✔	✔
X54	Paint finish in RAL 7004 (Signal gray)	✔	✔	✔
X55	Paint finish in RAL 7038 (Agate gray)	✔	✔	✔
X56	Paint finish in RAL 1013 (Pearl white)	✔	✔	✔
X57	Paint finish in RAL 5012 (Light blue)	✔	✔	✔
X58	Paint finish in RAL 2001 (Red orange)	✔	✔	✔
X59	Paint finish in RAL 7030 (Stone gray)	✔	✔	✔
X91	Paint finish in RAL 7011 (Iron gray)	✔	✔	✔
K24	Primer	Pale green	Light gray	Light gray
K23	Special paint finish “Worldwide” (anthracite RAL 7016)	✔	✔	✔
K23 + X..	Special finish “Worldwide” in another color (X01 to X08)	✔	✔	✔

–	Not possible
✔	Option available

© Siemens AG 2017

Options (continued)

Terminal box type (See selection and ordering data for assignment)	Cable entry Power	External signals	Outer cable diameter, max.[1] mm (in)	Number of main terminals	Cross-section per terminal, max. mm²	Rated current, max.[2] A
gk803	1 × M25 × 1.5	1 × M16 × 1.5 [3]	20 (0.79)	Phases: 3 × M5 Grounding: 2 × M5	1 × 10	52
gk806	1 × M25 × 1.5	1 × M16 × 1.5 [3]	20 (0.79)	Phases: 6 × M5 Grounding: 2 × M5	1 × 10	52
gk813	1 × M32 × 1.5	1 × M16 × 1.5 [3]	24.2 (0.95)	Phases: 3 × M5 Grounding: 2 × M5	1 × 16	70
gk823	1 × M32 × 1.5	1 × M16 × 1.5 [3]	24.2 (0.95)	Phases: 3 × M5 Grounding: 2 × M5	1 × 16	70
gk826	1 × M32 × 1.5	1 × M16 × 1.5 [3]	24.2 (0.95)	Phases: 6 × M5 Grounding: 2 × M5	1 × 10	52
gk833	1 × M40 × 1.5	1 × M16 × 1.5 [3]	32 (1.26)	Phases: 3 × M6 Grounding: 2 × M6	1 × 35	110
gk843	1 × M50 × 1.5	1 × M16 × 1.5 [3]	38 (1.50)	Phases: 3 × M6 Grounding: 2 × M6	1 × 50	133
gk846	1 × M50 × 1.5	1 × M16 × 1.5 [3]	38 (1.50)	Phases: 6 × M6 Grounding: 2 × M6	1 × 25	88
gk863	1 × M50 × 1.5	1 × M16 × 1.5 [3]	38 (1.50)	Phases: 3 × M6 Grounding: 2 × M6	1 × 50	133
gk873	1 × M63 × 1.5	1 × M16 × 1.5 [3]	42.6 (1.68)	Phases: 3 × M6 Grounding: 2 × M6	1 × 50	133
gk874	1 × M63 × 1.5	1 × M16 × 1.5 [3]	42.6 (1.68)	Phases: 3 × M10 Grounding: 2 × M6	2 × 70	240
1XB7322-P05	2 × M50 × 1.5	1 × M16 × 1.5 [4]	38 (1.50)	Phases: 3 × M12 Grounding: 2 × M6	2 × 50	210
1XB7422-P06	2 × M63 × 1.5	1 × M16 × 1.5 [4]	53 (2.09)	Phases: 3 × M12 Grounding: 4 × M8	2 × 70	270
1XB7700-P02	3 × M75 × 1.5	1 × M16 × 1.5 [4]	68 (2.68)	Phases: 3 × 2 × M12 Grounding: 3 × fixing eyelet	3 × 150	700
1XB7712-P03	4 × M75 × 1.5	1 × M16 × 1.5 [4]	68 (2.68)	Phases: 3 × 4 × M16 Grounding: 4 × M16	4 × 185	1150

For terminal box type **1XB7712-P03**, other cable entries (power) can be ordered via P options, depending on the standard:

P00	Undrilled cable entry plate
P01	Cable entry plate 3 × M63 × 1.5 (not with 1XB7712-P01)
P02	Cable entry plate 3 × M75 × 1.5
P04	Cable entry plate 4 × M63 × 1.5

For terminal box type **1XB7700-P02**, other cable entries (power) can be ordered via P options, depending on the standard:

P00	Undrilled cable entry plate
P01	Cable entry plate 3 × M63 × 1.5

For terminal box types **1XB7322-P05** and **1XB7422-P06**, another cable entry (power) can be ordered via the P option, depending on the standard:

P00	Undrilled cable entry plate

For options **K09** or **K10**, instead of terminal box **gk863**, terminal box **gk873** is used mounted on the side.

For options **K09** or **K10**, instead of terminal box **gk833**, terminal box **gk843** is used mounted on the side.

For options **K09** or **K10**, instead of terminal box **gk813**, terminal box **gk823** is used mounted on the side.

[1] Depending on the version of metric cable gland (based on the MOTIONCONNECT cable type and cable glands from HUGRO or from AGRO).
[2] Current-carrying capacity based on EN 60204-1/IEC 60364-5-52 with installation type E.
[3] Thread M16 × 1.5 arranged at 90° to signal connection; thread only with options A12, A25 and when 9th data position is A (without encoder).
[4] Thread M16 × 1.5 arranged opposite the signal connection (sideways to the cable entry plate); thread only with option A12 and encoder version A (without encoder).

© Siemens AG 2017

Technical specifications (continued)

Motor Type	Fan motor current consumption, max.			Air flow direction	Volume of air, min.	Sound pressure level L_{pA} (1 m) Motor + external fan operation 50 Hz, Tolerance +3 dB
	A	A	A		m^3/s (ft^3/s)	dB
Forced ventilation	**230 V 1 AC/50 Hz (± 10 %)**	**230 V 1 AC/60 Hz (± 10 %)**	**265 V 1 AC/60 Hz (± 10 %)**			
1PH808	0.33 0.20	0.25 0.16	0.32 0.19	NDE → DE DE → NDE	0.02 (0.71)	70 [1]
Forced ventilation	**400 V 3 AC/50 Hz (±10 %)**	**400 V 3 AC/60 Hz (±10 %)**	**480 V 3 AC/60 Hz (±10 %)**			
1PH810	0.12 0.13	0.09 0.09	0.12 0.13	NDE → DE DE → NDE	0.04 (1.41)	70 [1]
1PH813	0.13 0.21	0.16 0.19	0.17 0.23	NDE → DE DE → NDE	0.09 (3.18)	70 [1]
1PH816	0.17 0.23	0.22 0.30	0.22 0.33	NDE → DE DE → NDE	0.16 (5.65)	73 [1]
Forced ventilation (EC fan)	**200 V ... 277 V 1 AC/ 50 Hz, 60 Hz (±10 %)**					
1PH818	1.2 ... 0.88	–	–	NDE → DE DE → NDE	0.17 (6.00)	73 [2]
1PH822	1.9 ... 1.35	–	–	NDE → DE DE → NDE	0.31 (10.9)	73 [2]
Forced ventilation	**400 V 3 AC/50 Hz (±10 %)**	**3 AC 400 V/60 Hz (+5 %, ±10 %)**	**480 V 3 AC/60 Hz (+5 %, -10 %)**			
1PH828	2.55	2.5	2.5	NDE → DE DE → NDE	0.31 (10.9)	74 [2]

Note: The technical specifications may vary for special fans (e.g. **M03**, **M39**, **L03**, **L75**). You will find additional information on special fans in the Configuration Manual.

9

[1] At a rated pulse frequency of 4 kHz and a speed range up to 5000 rpm.

[2] At rated pulse frequencies of 2 kHz and speed ranges:

Forced ventilation (IP55 degree of protection):	Forced ventilation (IP23 degree of protection):
1PH818 up to 5000 rpm	1PH818 up to 3000 rpm
1PH822 up to 3500 rpm	1PH822 up to 2000 rpm
1PH828 up to 3300 rpm	1PH828 up to 2800 rpm

© Siemens AG 2017

Technical specifications (continued)

Cooling data and sound pressure levels

Motor Type	Flow rate, min.	Pressure drop	Water connection at NDE Thread	Sound pressure level L_{pA} (1 m) Motor Tolerance +3 dB
	l/min (US gal./min.)	bar	Inches	dB
Water cooling				
1PH808	6 (1.58)	0.6	G 1/8	68 [1]
1PH810	8 (2.11)	0.4	G 1/4	68 [1]
1PH813	12 (3.17)	0.9	G 3/8	68 [1]
1PH816	15 (3.96)	0.2	G 1/2	69 [1]
1PH8184	15 (3.96)	0.6	G 3/8	70 [2]
1PH8186	15 (3.96)	0.7	G 3/8	70 [2]
1PH822.-1 (Asynchronous version)	20 (5.28)	0.6	G 3/8	70 [2]
1PH822.-2 (Synchronous version)	25 (6.60)	0.9	G 3/8	70 [3]
1PH828	35 (9.25)	0.6	G 1/2	72 [3]

Water specification

Cooling water quality	The values specified for the cooling water correspond to the requirements for a closed cooling circuit. Not all of the specified concentrations will occur in the cooling water at the same time. A filter can be installed to ensure fault-free operation. The filter fineness should be no less than 100 µm.	
Cooling water specifications	Quality of the water used as coolant for motors with stainless-steel pipes + cast iron or steel jacket 1PH808 ... 1PH816	Quality of the water used as coolant for motors with stainless-steel pipes 1PH818 ... 1PH828
pH value	6.0 ... 9.0	
Total hardness	< 170 ppm	
Conductivity	< 500 µS/cm	< 2000 µS/cm
Operating pressure, max.	< 6 bar	
Pressure drop at V(N)	< 1 bar	
Cooling water inlet temperature, max.	< 30 °C (86 °F)	
Anti-freeze protection / corrosion protection	20 ... 30 %	
NALCO 00GE056 inhibitor	0.2 ... 0.25 %	
Constituent elements		
Dissolved substances	< 340 ppm	
Grain size, max.	< 100 µm	
Chloride ions	< 40 ppm	< 250 ppm
Sulfate ions	< 50 ppm	< 240 ppm
Nitrate ions	< 50 ppm	

[1] At a rated pulse frequency of 4 kHz and a speed range up to 5000 rpm.

[2] At rated pulse frequencies of 2 kHz or 4 kHz and speed ranges:
1PH818 up to 5000 rpm
1PH822 up to 4500 rpm.

[3] At a rated pulse frequency of 2 kHz and speed ranges:
1PH822 up to 4500 rpm
1PH828 up to 3300 rpm.

© Siemens AG 2017

Characteristic curves

Permissible radial forces 1PH808 motors Standard and Standard with location bearing

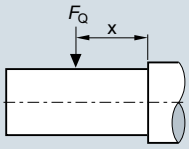

L_{10h} = 20000 h

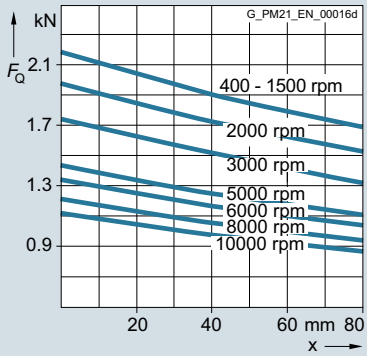

Permissible radial forces 1PH810 motors Standard and Standard with location bearing

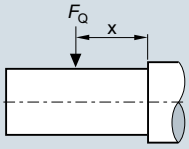

L_{10h} = 20000 h

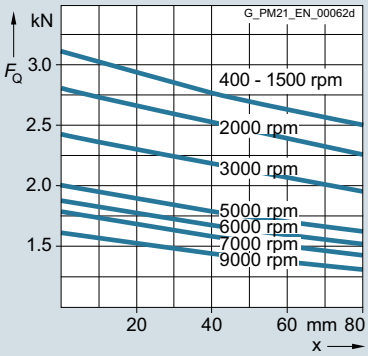

Permissible radial forces 1PH808 motors Performance

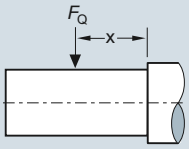

L_{10h} = 12000 h

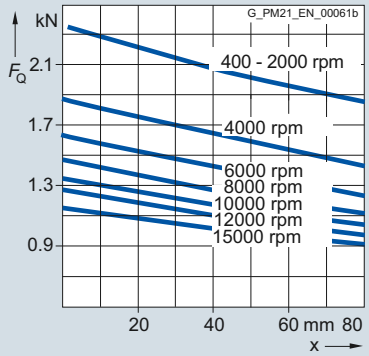

Permissible radial forces 1PH810 motors Performance

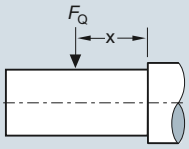

L_{10h} = 12000 h

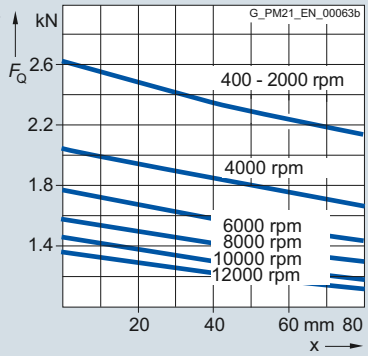

Permissible radial forces 1PH808 motors Advanced lifetime

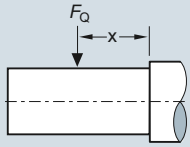

L_{10h} = 40000 h

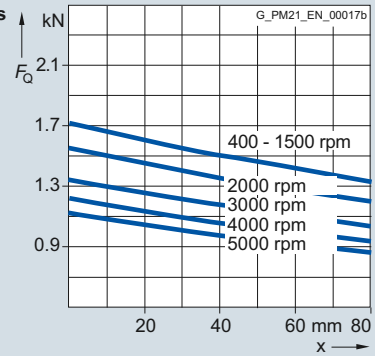

Permissible radial forces 1PH810 motors Advanced lifetime

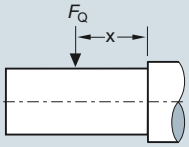

L_{10h} = 40000 h

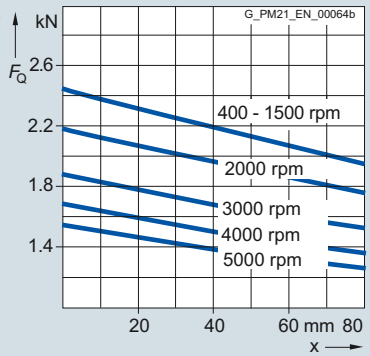

Permissible radial forces 1PH810 motors with increased radial force. Minimal radial force: 0.5 kN (112 lbf)

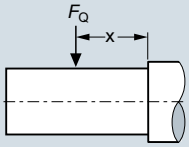

L_{10h} = 20000 h

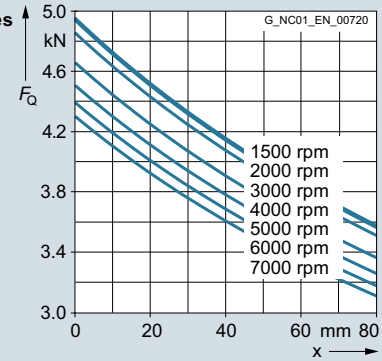

The roller bearings used here (bearings with increased radial force) could sustain damage if they are operated under no load. Observe the specified minimum radial forces.

© Siemens AG 2017

Characteristic curves (continued)

Permissible radial forces 1PH813 motors Standard and Standard with location bearing

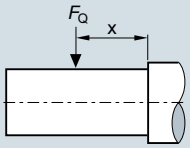

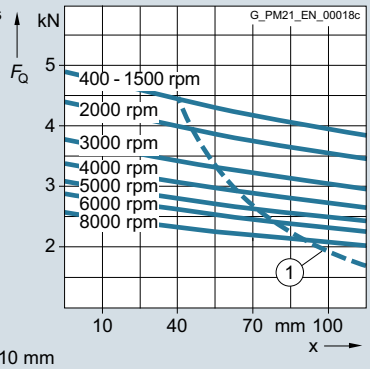

(1) Maximum load for 1PH7-compatible shaft extension (42 x 110 mm (1.65 x 4.33 in)) (option V90)

L_{10h} = 20000 h

Permissible radial forces 1PH816 motors Standard and Standard with location bearing

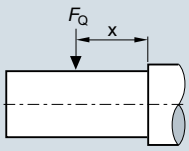

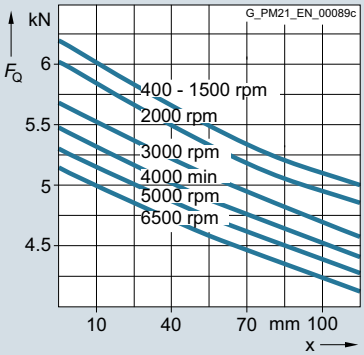

L_{10h} = 20000 h

Permissible radial forces 1PH813 motors Performance

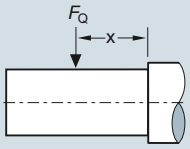

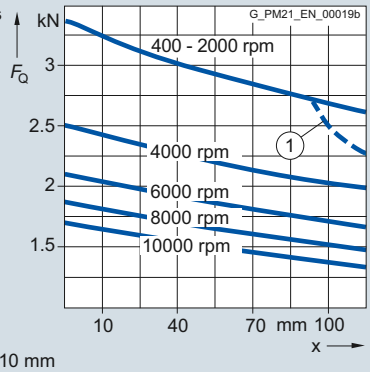

(1) Maximum load for 1PH7-compatible shaft extension (42 x 110 mm (1.65 x 4.33 in)) (option V90)

L_{10h} = 12000 h

Permissible radial forces 1PH816 motors Performance

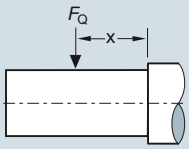

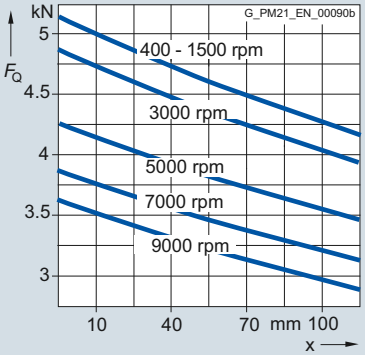

L_{10h} = 12000 h

Permissible radial forces 1PH813 motors Advanced lifetime

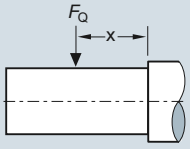

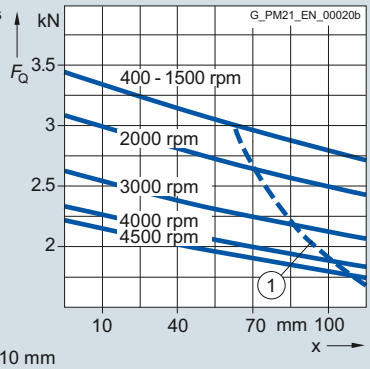

(1) Maximum load for 1PH7-compatible shaft extension (42 x 110 mm (1.65 x 4.33 in)) (option V90)

L_{10h} = 40000 h

Permissible radial forces 1PH816 motors Advanced Lifetime

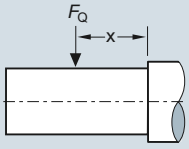

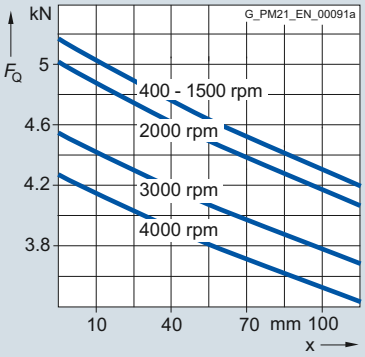

L_{10h} = 40000 h

Permissible radial forces 1PH813 motors with increased radial force. Minimal radial force: 0.7 kN (157 lbf)

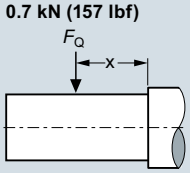

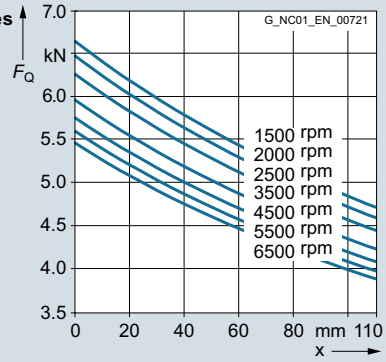

L_{10h} = 20000 h

Permissible radial forces 1PH816 motors with increased radial force. Minimal radial force: 1 kN (225 lbf)

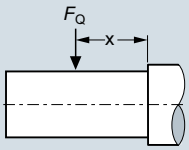

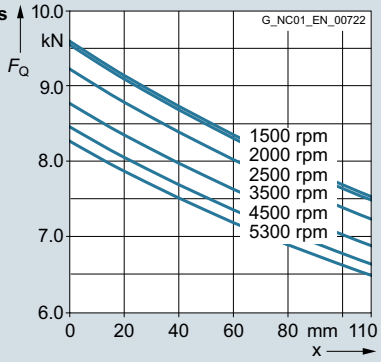

L_{10h} = 20000 h

The roller bearings used here (bearings with increased radial force) could sustain damage if they are operated under no load. Observe the specified minimum radial forces.

© Siemens AG 2017

Characteristic curves (continued)

Permissible radial forces 1PH818 motors Standard with location bearing

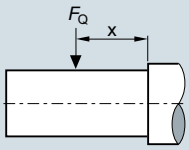

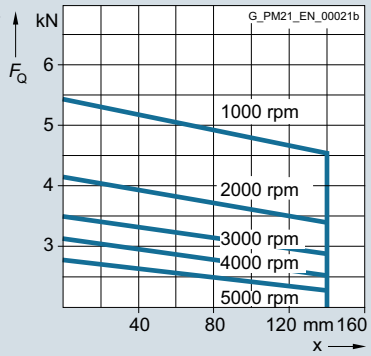

L_{10h} = 20000 h

Permissible radial forces 1PH822 motors Standard with location bearing

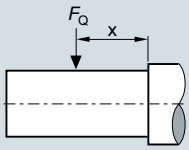

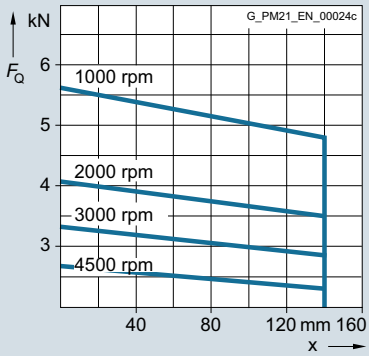

L_{10h} = 20000 h

Permissible radial forces 1PH818 motors with increased radial force

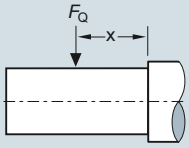

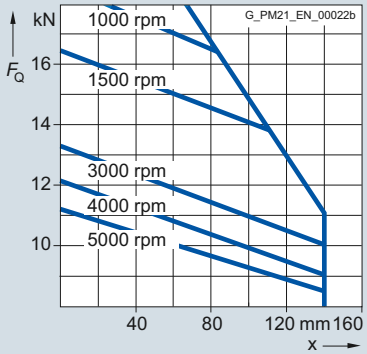

Minimum radial force 4 kN (899 lb_f)

L_{10h} = 12000 h

Permissible radial forces 1PH822 motors with increased radial force

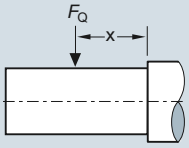

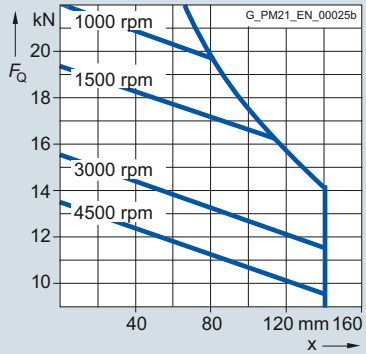

Minimum radial force 5 kN (1124 lb_f)

L_{10h} = 12000 h

Permissible radial forces 1PH818 motors Performance

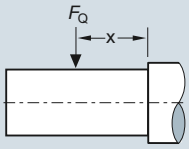

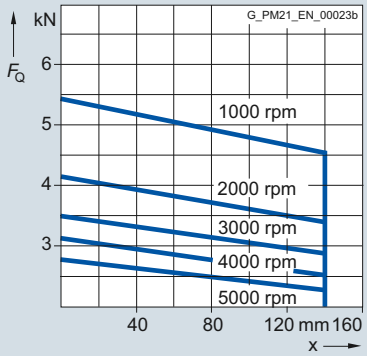

L_{10h} = 12000 h

Permissible radial forces 1PH822 motors Performance

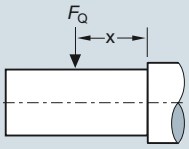

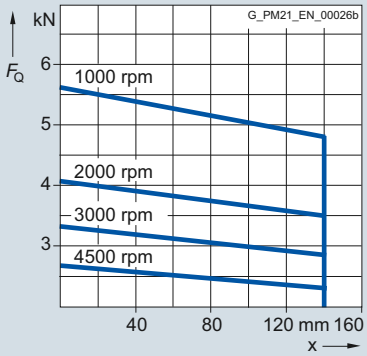

L_{10h} = 12000 h

The roller bearings used here (bearings with increased radial force) could sustain damage if they are operated under no load. Observe the specified minimum radial forces.

© Siemens AG 2017

Characteristic curves (continued)

Permissible radial forces 1PH828 motors Standard with location bearing

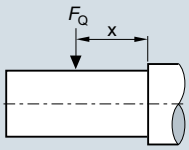

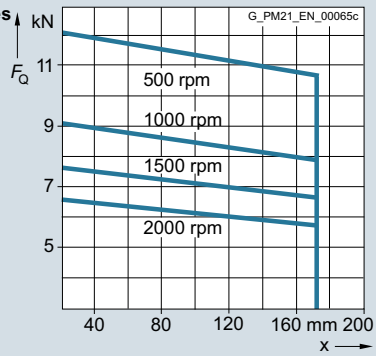

L_{10h} = 20000 h

Permissible radial forces 1PH828 motors with increased radial force

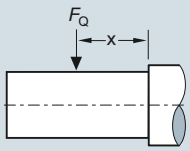

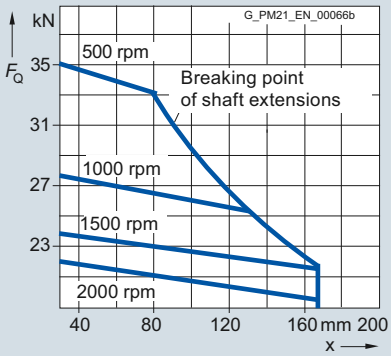

Minimum radial force 9 kN (2023 lb_f)

L_{10h} = 12000 h

The roller bearings used here (bearings with increased radial force) could sustain damage if they are operated under no load. Observe the specified minimum radial forces.

© Siemens AG 2017

Overview

Mounted holding brake for 1PH8 motors

A brake can be mounted on the DE of 1PH808 to 1PH822 motors.

These brakes are electromagnetic units for dry-running operation. An electromagnetic field is used to release the brake which is applied using spring force. They operate in accordance with the quiescent current principle, i.e. when no current is flowing, the spring-operated brake brakes and holds the drive. When power is applied to the brake, it is released and the drive is free to rotate.

In the event of a power failure or an emergency stop, the drive is braked from its current speed down to standstill.

Connection of the brakes (must be provided by the customer)

- Alternating voltage 230 V 1 AC, 50/60 Hz
- Direct voltage 24 V DC up to 1PH816

The brake module is designed for an ambient temperature of -5 °C to +40 °C (23 °F to 104 °F).

The maximum speed of a motor with brake is limited to the maximum speed of the brake (refer to the table).

The holding brakes for 1PH818 and 1PH822 are not UL-approved. As a consequence, these motors do not have the cUR marking when mounted on brakes.

Motor Type	Brake type	Holding torque	Maximum speed	Moment of inertia	Weight	Coil current		Single switching energy, perm.	Moment of inertia, total (emergency stop)	Speed (emergency stop)	Number of emergency stops [1)]	Opening time	Closing time
			n_{max}	J_{Br}	m_{Br}	230 V AC ±10 %	24 V DC ±10 %	W_E	J_{tot}	n	z		
		Nm (lb_f-ft)	rpm	kgm^2 (lb_f-in-s^2)	kg (lb)	A	A	kJ	kgm^2 (lb_f-in-s^2)	rpm		ms	ms
1PH808	Size 13	29 (21.4)	5000	0.00093 (0.01)	10 (22.0)	0.8	4.1	2.2	0.0174 (0.15)	4800	2000	150	40
1PH810	Size 19	60 ... 150 (44.3 ...111)	5000	0.0048 (0.04)	21 (46.3)	1.0	4.7	7	0.063 (0.56)	4500	2000	500	60
1PH813	Size 24	140 ... 310 (103...229)	4500	0.0141 (0.12)	46 (101)	1.3	6.3	15.5	0.218 (1.93)	3600	2000	650	100
1PH816	Size 29	280 ... 500 (207 ... 369)	4000	0.0266 (0.24)	66 (146)	1.4	6.7	24	0.456 (4.04)	3100	2000	750	150
1PH818	NFF-A 63	1000 (738)	3500	0.022 (0.19)	63 (139)	2.2	–	98	1.3 (11.5)	3000	2000	300	80
1PH822	NFF-A 100	1600 (1180)	3100	0.051 (0.45)	88 (194)	2.7	–	210	3.9 (34.52	2800	1200	300	100

Explanation of terms

Holding torque	For 1PH810 to 1PH816 motors, the holding torque can be continuously set in the specified value range using a setting ring. The dynamic braking torque is approximately 70 % of the set holding torque.
Single switching energy, perm. W_E	Perm. switching energy for emergency stop, $W_E = J_{tot.} \times n^2/182.4 \times 10^{-3}$ (J in kgm^2, n in rpm)
Service life switching energy W_{max}	Max. possible switching energy of the brake (for emergency stop) until the brake linings must be replaced, $W_{max} = W_E \times z$.
Number of emergency stops z	The specified number of emergency stops refers to the specified conditions. A conversion can be made for operation under different conditions: Number of emergency stops $z = W_{max}/W_E$
Coil current	Current to release the brake.
Opening time	Separating time until the brake releases (the specified values refer to the maximum braking torque and rated voltage).
Closing time	Interlocking time until the brake closes (values refer to the maximum braking torque and with rated voltage).

Note: You will find additional information on mounted holding brakes in the Configuration Manual.

© Siemens AG 2017

Overview

SIMOTICS M-1FE1 synchronous built-in motors

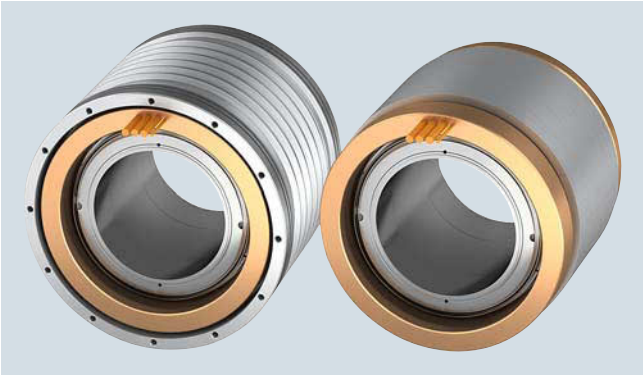

SIMOTICS M-1FE2 built-in motors

The SIMOTICS M-1FE built-in motors are water-cooled synchronous motors that are supplied as stator and rotor components. When the stator and rotor have been mounted to the spindle in the spindle box, a complete spindle unit is created.

Benefits

- Compact design (e.g. for turning machines and vertical milling machines) by dispensing with mechanical components, such as motor switch armature, belt drive, gearbox and spindle encoder
- High power density thanks to water cooling
- Maximum speeds up to 40000 rpm, torques up to 1530 Nm (1128 lb_f-ft) in S1 duty
- Higher torque – up to 60 % – with the same active component volume, consequently more compact machine design compared to SIMOTICS M-1PH2 (asynchronous motors)
- Extremely short ramp-up and braking times (50 %) thanks to higher torque compared to SIMOTICS M-1PH2
- Cold rotor due to excitation using permanent magnets in the lower speed range and lower power losses in the rotor, resulting in reduced bearing temperature rise and spindle expansion
- The stator and rotor are **ready to install**, no finishing is necessary
- The absence of drive transverse forces permits extremely high accuracy on the workpiece thanks to smooth, accurate spindle motion even at very low speeds
- Larger rotor inner bore than squirrel-cage rotor of asynchronous motors, but with the same outer diameter – advantageous with regard to the bar capacity of automatic turning machines and resulting in higher spindle stiffness due to larger shaft diameters for milling spindles
- Increased rigidity of the spindle drive, achieved by mounting the motor components between the main spindle bearings
- Less cooling capacity required for the same power compared to SIMOTICS M-1PH2, i.e. greater efficiency
- Only one encoder (hollow-shaft measuring system) for sensing motor speed and spindle position
- Simple servicing by replacing complete motor spindles
- Compatible system of SINUMERIK, SINAMICS S120 and motor, therefore fast commissioning is ensured
- Higher machine productivity:
  The permanently excited motor spindles (PE spindles) increase the power density and economic efficiency of CNC machines. The optimized combination of SIMOTICS M-1FE1 built-in motor, drive control and CNC offers further opportunities for rationalization, such as shorter workpiece machining times and fewer clamping faces.

© Siemens AG 2017

Application

The water-cooled SIMOTICS M-1FE built-in motors are used in combination with the SINAMICS S120 drive system for applications that require the highest quality of machining, accuracy and running smoothness, as well as very short ramp-up times.

There are two main versions of SIMOTICS M-1FE built-in motor available:

- High Torque series
  6-pole/8-pole and 16-pole synchronous motors are available that have been developed for turning and grinding machines with moderate maximum speeds.
  These motors are characterized by a very high torque utilization. In this case, the speed range is approximately 1:2.
- High Speed series
  In this series, 4-pole synchronous motors are available for milling. These motors are optimized for high maximum speeds and a speed range of over 1:4.

Design

The SIMOTICS M-1FE built-in motor comprises:

- A laminated, permanently excited rotor, which, as an option, can be designed with a sleeve for simple mounting and removal.
- A wound stator core with cooling jacket and encapsulated winding overhang.
  - Free cable ends, length 0.5/1.5 m (1.64/4.92 ft)
  - Two integral PTC thermistors (incl. 1 reserve), optionally with full or universal protection
  - A cooling jacket into which the stator has been inserted

Rotor with sleeve

Torque is transmitted to the spindle mechanically without play by means of a cylindrical stepped press fit. The rotor is mounted on the spindle by thermal shrinking.
The rotor with sleeve is pre-balanced and can be removed and subsequently remounted. The bond can be released by pressure-oil injection without affecting the joint surfaces.

Rotor without sleeve

Torque is transmitted to the spindle mechanically without play by means of a cylindrical stepped press fit. The rotor is mounted on the spindle by thermal shrinking.
Removal of the rotor is not possible with this type of mounting. Rotors without sleeves are not pre-balanced.

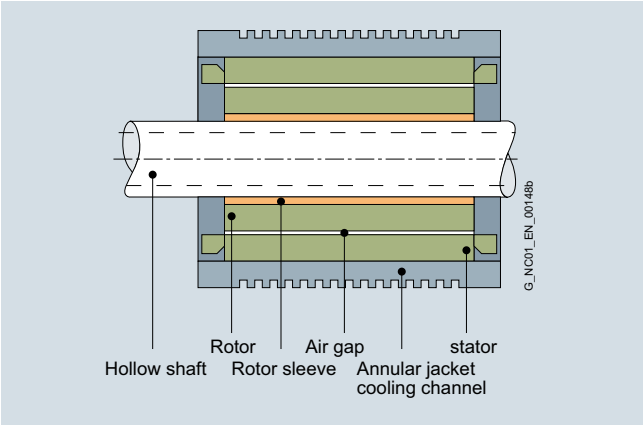

Technical specifications

Product name	SIMOTICS M-1FE built-in motor
Machine type	Synchronous spindle with permanent-field rotor
Constant power range	1:2 (6-/8-/16-pole)/1:4 (4-pole)
Recommended coolant inlet temperature, approx.	25 °C (77 °F)
Standard protection temperature monitoring	2 Pt1000 PTC thermistors in the stator winding, 1 x spare
Full protection optional Application example: Machining when motor is stationary	In addition to standard protection 3 × PTC thermistor triplet Can be evaluated, e.g., using a thermal motor protection unit: Article No.: 3RN1013-1GW10
Universal protection optional	Full protection + NTC PT3-51F + NTC K227
Stator winding insulation in accordance with EN 60034-1 (IEC 60034-1)	Temperature class 155 (F) for a coolant inlet temperature of 25 °C (77 °F)
Type of construction (cf. ISO)	Individual components: Stator, rotor
Degree of protection in accordance with IEC 60034-5	IP00
Balance quality of rotor in accordance with ISO 1940-1	
• Rotor with sleeve	Version-specific - Pre-balanced, balance quality G 2.5 Reference speed 3600 rpm - Non-balanced for full balancing after assembly
• Rotor without sleeve	Non-balanced
Encoder system	(not included in scope of supply)
Motor connection	Free cable ends, length 0.5/1.5 m (1.64/4.92 ft)
Rating plate	2 units, enclosed separately

A Voltage Protection Module (VPM) is required for certain motor types if they are operated up to maximum speed.

© Siemens AG 2017

Characteristic curves

Comparison of synchronous/asynchronous spindles

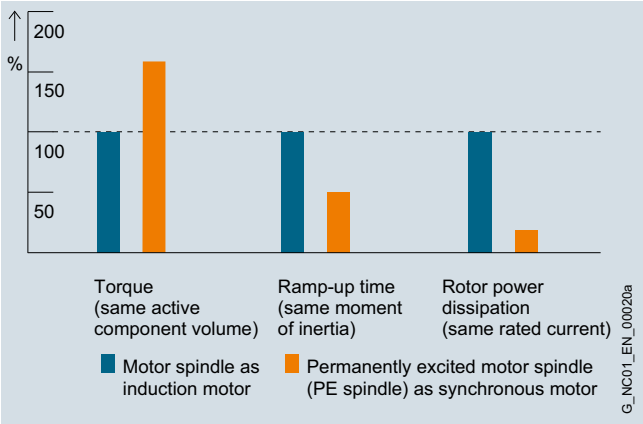

Advantages of SIMOTICS M-1FE synchronous spindle over asynchronous spindle

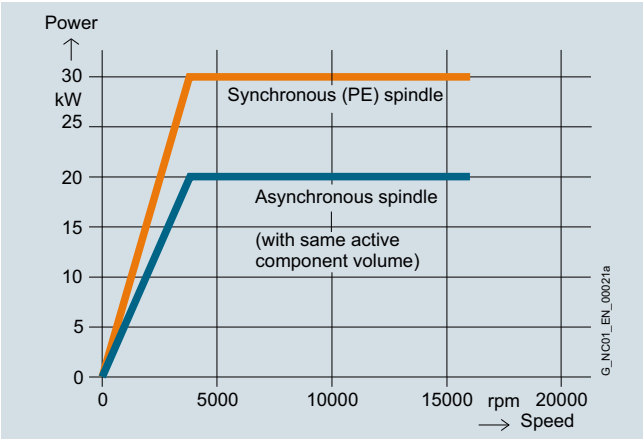

Comparison of power/speed characteristics

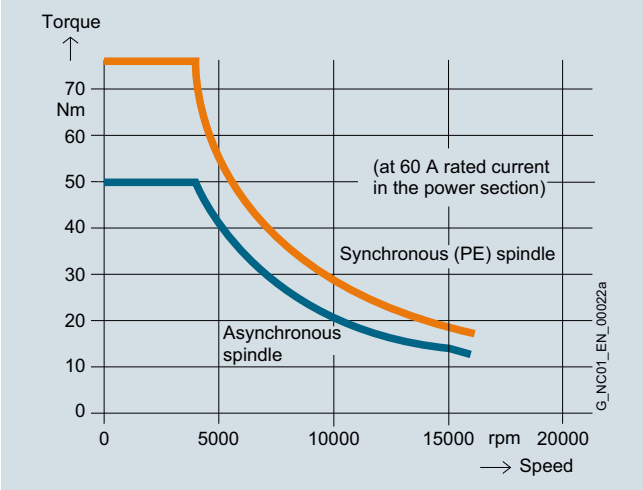

Comparison of torque/speed characteristics

Power/speed and torque/speed characteristics of PE spindles compared to the asynchronous version under the following supplementary conditions: identical active part volume and identical rated current (60 A) of the Motor Module.

More information

Liquid cooling

These are third-party products that are fundamentally suitable. It goes without saying that equivalent products from other manufacturers may be used. These recommendations are to be seen as helpful information, not as requirements or regulations. Siemens cannot accept any liability for the quality and properties/features of third-party products.

Please get in touch with the cooler manufacturers listed below for technical information.

ait-deutschland GmbH
www.kkt-chillers.com

BKW Kälte-Wärme-Versorgungstechnik GmbH
www.bkw-kuema.de

DELTATHERM Hirmer GmbH
www.deltatherm.com

Glen Dimplex Deutschland GmbH
RIEDEL Kältetechnik Division
www.riedel-cooling.com

Helmut Schimpke und Team Industriekühlanlagen GmbH + Co. KG
www.schimpke.de

Hydac System GmbH
www.hydac.com

Hyfra Industriekühlanlagen GmbH
www.hyfra.com

Lahntechnik GmbH
www.lahntechnik.com

Pfannenberg GmbH
www.pfannenberg.com

© Siemens AG 2017

Selection and ordering data

Rated power for duty type P_{rated} S1 kW (hp)	S6-40 % kW (hp)	Rated torque M_{rated} S1 Nm (lb_f-ft)	S6-40 % Nm (lb_f-ft)	Rated speed n_{rated} rpm	Speed without VPM, max. $n_{max\ Inv}$ rpm	Speed, max. n_{max} rpm	**SIMOTICS M-1FE1 synchronous built-in motors** Article No.	Moment of inertia rotor without sleeve [8] J kgm^2 (lb_f-in-s^2)	Weight, approx. stator + rotor without sleeve m kg (lb)
SIMOTICS M-1FE1 High Torque series – Water cooling – ΔT = 105 K - Line voltage 400 V 3 AC, operation on Active Line Module									
7.4 (9.92)	9.9 (13.3)	4.5 (3.32)	6 (4.43)	15800	18000	18000	**1FE1041-6WM ■ 0 - 6 B A ■**	0.00019 (0.02)	2.8 (6.17)
4 (5.36)	5.3 (7.11)	4.5 (3.32)	6 (4.43)	8500	13100	18000	**1FE1041-6WU ■ ■ - 6 B A ■**	0.00019 (0.02)	2.8 (6.17)
14.4 (19.3)	18.3 (24.5)	11 (8.11)	14 (10.3)	12500	18000	18000	**1FE1042-6WN ■ 0 - 6 B A ■**	0.00033 (0.03)	6.5 (14.3)
11.5 (15.4)	14.7 (19.7)	11 (8.11)	14 (10.3)	10000	15000	18000	**1FE1042-6WR ■ ■ - 6 B A ■**	0.00033 (0.03)	6.5 (14.3)
9.2 (12.3)	11.7 (15.7)	11 (8.11)	14 (10.3)	8000	12000	18000	**1FE1042-6WT ■ ■ - 6 B A ■**	0.00033 (0.03)	6.5 (14.3)
8.3 (11.1)	10.4 (13.9)	10 (7.38)	12.4 (9.15)	8000	15000	15000	**1FE1051-6WK ■ 0 - 6 B ■ ■**	0.00106 (0.01)	5.5 (12.1)
6.3 (8.45)	7.9 (10.6)	10 (7.38)	12.6 (9.29)	6000	12300	15000	**1FE1051-6WN ■ ■ - 6 B ■ ■**	0.00106 (0.01)	5.5 (12.1)
14 (18.8)	18 (24.1)	18 (13.3)	23 (17.0)	7500	15000	15000	**1FE1052-6WK ■ 0 - 6 B ■ ■**	0.00195 (0.17)	8.2 (18.1)
11.5 (15.4)	14.5 (19.4)	20 (14.8)	25.2 (18.6)	5500	12300	15000	**1FE1052-6WN ■ ■ - 6 B ■ ■**	0.00195 (0.17)	8.2 (18.1)
5.7 (7.64)	7.2 (9.66)	18 (13.3)	23 (17.0)	3000	6000	14200	**1FE1052-6WY ■ ■ - 6 B ■ ■**	0.00195 (0.17)	8.2 (18.1)
23 (30.8)	29 (38.9)	37 (27.3)	46 (33.9)	6000	12000	12000	**1FE1054-6WN ■ 0 - 6 B A ■**	0.0038 (0.03)	14.3 (31.5)
20.2 (27.1)	28.9 (38.8)	42 (31.0)	60 (44.3)	4600	8500	12000	**1FE1054-6WR ■ ■ - 6 B A ■**	0.0038 (0.03)	14.3 (31.5)
11.6 (15.6)	15 (20.1)	13 (9.59)	17 (12.5)	8500	12000	12000	**1FE1061-6WH ■ 0 - 6 B ■ ■**	0.00141 (0.01)	5.5 (12.1)
4.8 (6.44)	6.2 (8.31)	13 (9.59)	17 (12.5)	3500	6300	12000	**1FE1061-6WV ■ ■ - 6 B ■ ■**	0.00141 (0.01)	5.5 (12.1)
4 (5.36)	5.3 (7.11)	13 (9.59)	17 (12.5)	3000	5300	10500	**1FE1061-6WY ■ ■ - 6 B ■ ■**	0.00141 (0.01)	5.5 (12.1)
14 (18.8)	17 (22.8)	23 (17.0)	28 (20.7)	5800	9700	12000	**1FE1062-6WQ ■ 1 - 6 B A ■**	0.0028 (0.02)	7.7 (17.0)
25 (33.5)	36.5 (48.9)	56 (41.3)	81 (59.7)	4300	8000	12000	**1FE1064-6WN ■ 1 - 6 B A ■**	0.00553 (0.04)	14.5 (32.0)
20 (26.8)	29 (38.9)	56 (41.3)	81 (59.7)	3400	6300	10000	**1FE1064-6WQ ■ 1 - 6 B A ■**	0.00553 (0.04)	14.5 (32.0)
34 (45.6)	42.5 (57.0)	65 (47.9)	81 (59.7)	5000	8500	9000	**1FE1082-6WP ■ ■ - 6 B ■ ■**	0.01048 (0.12)	14 (30.9)
29.3 (39.3)	36.5 (48.9)	65 (47.9)	81 (59.7)	4300	7700	9000	**1FE1082-6WQ ■ 1 - 6 B ■ ■**	0.01048 (0.12)	14 (30.9)
24.5 (32.9)	30 (40.2)	65 (47.9)	81 (59.7)	3600	6000	9000	**1FE1082-6WS ■ ■ - 6 B ■ ■**	0.01048 (0.12)	14 (30.9)
15 (20.1)	18.7 (25.1)	65 (47.9)	81 (59.7)	2200	3800	9000	**1FE1082-6WW ■ 1 - 6 B ■ ■**	0.01048 (0.12)	14 (30.9)
11.6 (15.6)	14.4 (19.3)	65 (47.9)	81 (59.7)	1700	3100	8000	**1FE1082-6WE ■ 1 - 6 B ■ ■**	0.01048 (0.12)	14 (30.9)
35.5 (47.6)	46.5 (62.4)	97 (71.5)	127 (93.7)	3500	5600	9000	**1FE1083-6WP ■ ■ - 6 B ■ ■**	0.016 (0.14)	24 (52.9)
31 (41.6)	42 (56.3)	130 (95.9)	175 (129)	2300	3800	9000	**1FE1084-6WR ■ 1 - 6 B ■ ■**	0.02067 (0.24)	30 (66.1)
23.1 (31.0)	31.1 (41.7)	130 (95.9)	175 (129)	1700	2900	7000	**1FE1084-6WU ■ 1 - 6 B ■ ■**	0.02067 (0.24)	30 (66.1)
15 (20.1)	19 (25.5)	130 (95.9)	174 (128)	1100	1900	4500	**1FE1084-6WX ■ 1 - 6 B ■ ■**	0.02067 (0.24)	30 (66.1)
10 (13.4)	13.2 (17.7)	28 (20.7)	36 (26.6)	3500	7000	7000	**1FE1091-6WN ■ 0 - 6 B ■ ■**	0.00814 (0.07)	17 (37.5)
6.3 (8.45)	7.5 (10.1)	30 (22.1)	36 (26.6)	2000	4100	7000	**1FE1091-6WS ■ ■ - 6 B ■ ■**	0.00814 (0.07)	17 (37.5)
24.2 (32.5)	31 (41.6)	66 (48.7)	85 (62.7)	3500	7000	7000	**1FE1092-6WN ■ 0 - 6 B ■ ■**	0.01566 (0.14)	26 (57.3)
22 (29.5)	28.5 (38.2)	66 (48.7)	85 (62.7)	3200	5100	7000	**1FE1092-6WR ■ 1 - 6 B ■ ■**	0.01566 (0.14)	26 (57.3)
36.6 (49.1)	47 (63.0)	100 (73.8)	128 (94.4)	3500	7000	7000	**1FE1093-6WN ■ 0 - 6 B ■ ■**	0.02317 (0.21)	36 (79.4)
27.2 (36.5)	34 (45.6)	100 (73.8)	130 (95.9)	2600	4300	7000	**1FE1093-6WS ■ ■ - 6 B ■ ■**	0.02317 (0.21)	36 (79.4)
16.8 (22.5)	21.5 (28.8)	100 (73.8)	128 (94.4)	1600	3400	7000	**1FE1093-6WV ■ 1 - 6 B ■ ■**	0.02317 (0.21)	36 (79.4)
15 (20.1)	18 (24.1)	98 (72.3)	130 (95.9)	1460	2500	6300	**1FE1093-6WX ■ 1 - 6 B ■ ■**	0.02317 (0.21)	36 (79.4)

• Standard protection: 2 × Pt1000 [1] • Full protection: 2 × Pt1000 + 3 × PTC thermistor triplet [2] • Universal protection [3]	**1** **3** **5**
• Operation without VPM module • Operation with VPM module	**0** **1**
• Delivery of stator + rotor [1] [4] [5]	**6**
• Stator with cooling jacket [1] [7]	**B**
• Without rotor sleeve, d_i see dimensions table • With rotor sleeve, d^* see dimensions table (only for 1FE1061/1FE108/1FE109) • With rotor sleeve, d^{**} see dimensions table (only for 1FE1051/1FE1052/1FE108/1FE109) • With rotor sleeve, d^{**} see dimensions table (only for 1FE1082)	**A** **B** **C** **D**
• Free cable ends, length 1.5 m (4.92 ft) [6] Cable outlet at large outer diameter of cooling jacket Cable outlet at small outer diameter of cooling jacket • Free cable ends, length 0.5 m (1.64 ft) [6] Cable outlet at large outer diameter of cooling jacket Cable outlet at small outer diameter of cooling jacket	**0** **1** **2** **3**

S1 = Continuous duty
S6 = Intermittent duty:
Type 1FE104/1FE105/1FE106/1FE1082: Duty cycle time 1 min
Type 1FE1084/1FE109: Duty cycle time 2 min

For footnotes, see next page.

© Siemens AG 2017

Motor type (repeated)	Rated current for duty type		**Voltage Protection Module (VPM)**	**SINAMICS S120 Motor Module**	
				Required rated current	**Booksize format**
					Internal air cooling For other components, see SINAMICS S120 drive system
	I_{rated} S1 A	S6-40 % A		I_{rated} S1 to n_{max} A	Article No.
1FE1041-6WM...	13	17.5	–	30 [10]	**6SL3120-1TE23-0AD.**
1FE1041-6WU...	8	11	VPM 120	18 [10]	**6SL3120-■TE21-8AD.**
1FE1042-6WN...	24	32	–	45 [10]	**6SL3120-1TE24-5AA.**
1FE1042-6WR...	19	26	VPM 120	30 [10]	**6SL3120-1TE23-0AD.**
1FE1042-6WT...	16	22	VPM 120	30 [10]	**6SL3120-1TE23-0AD.**
1FE1051-6WK...	20	29	–	30 [10]	**6SL3120-1TE23-0AD.**
1FE1051-6WN...	15	22	VPM 120	18 [10]	**6SL3120-■TE21-8AD.**
1FE1052-6WK...	37	54	–	45 [10]	**6SL3120-1TE24-5AA.**
1FE1052-6WN...	30	44	VPM 120	30	**6SL3120-1TE23-0AD.**
1FE1052-6WY...	13.5	20	VPM 120	18	**6SL3120-■TE21-8AD.**
1FE1054-6WN...	60	88	–	60	**6SL3120-1TE26-0AA.**
1FE1054-6WR...	40	58	VPM 120	45 [9]	**6SL3120-1TE24-5AA.**
1FE1061-6WH...	21	30	–	30	**6SL3120-1TE23-0AD.**
1FE1061-6WV...	9	13	VPM 120	9 [9]	**6SL3120-1TE21-0AD.**
1FE1061-6WY...	8	11.5	VPM 120	9 [9]	**6SL3120-1TE21-0AD.**
1FE1062-6WQ...	28.5	36	VPM 120	30 [9]	**6SL3120-1TE23-0AD.**
1FE1064-6WN...	56	80	VPM 120	60 [9]	**6SL3120-1TE26-0AA.**
1FE1064-6WQ...	43	61	VPM 120	45 [9]	**6SL3120-1TE24-5AA.**
1FE1082-6WP...	65	91	VPM 120	85	**6SL3120-1TE28-5AA.**
1FE1082-6WQ...	60	84	VPM 120	60 [9]	**6SL3120-1TE26-0AA.**
1FE1082-6WS...	45	62	VPM 120	45 [9]	**6SL3120-1TE24-5AA.**
1FE1082-6WW...	30	42	VPM 120	30 [9]	**6SL3120-1TE23-0AD.**
1FE1082-6WE...	24	33	VPM 120	30	**6SL3120-1TE23-0AD.**
1FE1083-6WP...	66	92	VPM 120	85	**6SL3120-1TE28-5AA.**
1FE1084-6WR...	60	84	VPM 120	60 [9]	**6SL3120-1TE26-0AA.**
1FE1084-6WU...	45	64	VPM 120	45 [9]	**6SL3120-1TE24-5AA.**
1FE1084-6WX...	30	42	VPM 120	30 [9]	**6SL3120-1TE23-0AD.**
1FE1091-6WN...	24	35	–	30	**6SL3120-1TE23-0AD.**
1FE1091-6WS...	15	19	VPM 120	18	**6SL3120-■TE21-8AD.**
1FE1092-6WN...	58	84	–	60	**6SL3120-1TE26-0AA.**
1FE1092-6WR...	41	58	VPM 120	45	**6SL3120-1TE24-5AA.**
1FE1093-6WN...	83	120	–	85	**6SL3120-1TE28-5AA.**
1FE1093-6WS...	53	76	VPM 120	60	**6SL3120-1TE26-0AA.**
1FE1093-6WV...	43	60	VPM 120	45	**6SL3120-1TE24-5AA.**
1FE1093-6WX...	30	45	VPM 120	30 [9]	**6SL3120-1TE23-0AD.**

Single Motor Module	**1**
Double Motor Module	**2**
Version status	

[1] Standard scope of supply: Encapsulated winding with 2 × Pt1000 (1 × reserve).
[2] Full protection option, application example: Load at motor standstill, external tripping unit required; Article No.: 3RN1013-1GW10.
[3] Universal protection option: Full protection + NTC PT3-51F + NTC K227.
[4] Ordering spare stator parts: 1FE1…-…..-7.W.
[5] Ordering spare rotor parts: 1FE1…-…..-3W..
[6] For cable design, see Configuration Manual.
[7] Stator without cooling jacket on request.
[8] For moment of inertia with sleeve, see Configuration Manual.
[9] Larger Motor Module required for operation without VPM.
[10] PWM clock cycle must be increased.

© Siemens AG 2017

Selection and ordering data

Rated power for duty type P_{rated} S1 kW (hp)	S6-40 % kW (hp)	Rated torque M_{rated} S1 Nm (lb_f-ft)	S6-40 % Nm (lb_f-ft)	Rated speed n_{rated} rpm	Speed without VPM, max. $n_{max\ Inv}$ rpm	Speed, max. n_{max} rpm	**SIMOTICS M-1FE1 synchronous built-in motors** Article No.	Moment of inertia rotor without sleeve [8] J kgm^2 (lb_f-in-s^2)	Weight, approx. stator + rotor without sleeve m kg (lb)
SIMOTICS M-1FE1 High Torque series – Water cooling – ΔT = 105 K – Line voltage 400 V 3 AC, operation on Active Line Module									
33 (44.3)	35 (46.9)	150 (111)	190 (140)	2100	3300	6500	**1FE1113-6WU ■ 1 - 6 B ■ ■**	0.047 (0.42)	53 (117)
22 (29.5)	24 (32.2)	150 (111)	190 (140)	1400	2300	5700	**1FE1113-6WX ■ 1 - 6 B ■ ■**	0.047 (0.42)	53 (117)
41.9 (56.2)	53.6 (71.9)	200 (148)	256 (189)	2000	4300	6500	**1FE1114-6WR ■ 1 - 6 B ■ ■**	0.06239 (0.55)	67 (148)
29.3 (39.3)	37.5 (50.3)	200 (148)	256 (189)	1400	3400	6500	**1FE1114-6WT ■ 1 - 6 B ■ ■**	0.06239 (0.55)	67 (148)
20.9 (28.0)	26.8 (35.9)	200 (148)	256 (189)	1000	2300	6000	**1FE1114-6WW ■ 1 - 6 B ■ ■**	0.06239 (0.55)	67 (148)
41.6 (55.8)	45 (60.3)	265 (195)	340 (251)	1500	2600	6500	**1FE1115-6WT ■ 1 - 6 B ■ ■**	0.078 (0.69)	81 (179)
29.1 (39.0)	30 (40.2)	265 (195)	340 (251)	1050	1800	4500	**1FE1115-6WW ■ 1 - 6 B ■ ■**	0.078 (0.69)	81 (179)
37.7 (50.6)	48.3 (64.8)	300 (221)	384 (283)	1200	2800	6500	**1FE1116-6WR ■ 1 - 6 B ■ ■**	0.09285 (0.82)	92 (203)
28.3 (38.0)	36.2 (48.5)	300 (221)	384 (283)	900	2200	5500	**1FE1116-6WT ■ 1 - 6 B ■ ■**	0.09285 (0.82)	92 (203)
22 (29.5)	28 (37.5)	300 (221)	384 (283)	700	1500	4000	**1FE1116-6WW ■ 1 - 6 B ■ ■**	0.09285 (0.82)	92 (203)
24 (32.2)	24 (32.2)	310 (229)	410 (302)	740	1100	3000	**1FE1116-6WY ■ 1 - 6 B ■ ■**	0.09285 (0.82)	92 (203)
61.3 (82.2)	78 (105)	325 (240)	440 (325)	1800	3200	8000	**1FE1143-8WM ■ 1 - 6 B A ■**	0.0859 (0.76)	74.4 (164)
38.5 (51.6)	47 (63.0)	320 (236)	440 (325)	1150	1900	5000	**1FE1143-8WQ ■ 1 - 6 B A ■**	0.0859 (0.76)	74.4 (164)
63 (84.5)	80 (107)	430 (317)	610 (450)	1400	2600	6500	**1FE1144-8WL ■ 1 - 6 B ■ ■**	0.1145 (1.01)	84.5 (186)
49.5 (66.4)	60 (80.5)	430 (317)	610 (450)	1100	2000	4900	**1FE1144-8WQ ■ 1 - 6 B ■ ■**	0.1145 (1.01)	84.5 (186)
40.5 (54.3)	51 (68.4)	430 (317)	610 (450)	900	1700	3800	**1FE1144-8WT ■ 1 - 6 B ■ ■**	0.1145 (1.01)	84.5 (186)
35.1 (47.1)	40 (53.6)	430 (317)	610 (450)	780	1400	3500	**1FE1144-8WV ■ 1 - 6 B ■ ■**	0.1145 (1.01)	84.5 (186)
104 (139)	124 (166) [10]	585 (431)	795 (586) [10]	1700	3100	8000	**1FE1145-8WN ■ 1 - 6 B ■ ■**	0.21636 (1.92) [9]	117 (258)
79.6 (107)	97 (130)	585 (431)	795 (586)	1300	2400	6000	**1FE1145-8WQ ■ 1 - 6 B ■ ■**	0.21636 (1.92) [9]	117 (258)
67.4 (90.4)	80 (107)	585 (431)	795 (586)	1100	1900	5000	**1FE1145-8WS ■ 1 - 6 B ■ ■**	0.21636 (1.92) [9]	117 (258)
48 (64.4)	52 (69.7)	585 (431)	795 (586)	780	1300	3500	**1FE1145-8WE ■ 1 - 6 B ■ ■**	0.21636 (1.92) [9]	117 (258)
103 (138)	124 (166) [10]	820 (605)	1110 (819) [10]	1200	2200	5500	**1FE1147-8WN ■ 1 - 6 B ■ ■**	0.28823 (2.55) [9]	155 (342)
81.6 (109)	97 (130)	820 (605)	1110 (819)	950	1700	4200	**1FE1147-8WQ ■ 1 - 6 B ■ ■**	0.28823 (2.55) [9]	155 (342)
64.4 (86.4)	80 (107)	820 (605)	1110 (819)	750	1400	3500	**1FE1147-8WS ■ 1 - 6 B ■ ■**	0.28823 (2.55) [9]	155 (342)

• Standard protection: 2 × Pt1000 [1] • Full protection: 2 × Pt1000 + 3 × PTC thermistor triplet [2] • Universal protection [3]	**1** **3** **5**
• Delivery of stator + rotor [1) 4) 5]	**6**
• Stator with cooling jacket [1) 7]	**B**
• Without rotor sleeve (only for 1FE111x/1FE1143/1FE1144) • With rotor sleeve, *d** see dimensions table (only for 1FE1114/1FE1116) • With rotor sleeve, *d*** see dimensions table • With rotor sleeve, *d*** see dimensions table (only for 1FE1113/1FE1145/1FE1147) • With rotor sleeve, *d*** see dimensions table (only for 1FE1113/1FE1145)	**A** **B** **C** **D** **E**
• Free cable ends, length 1.5 m (4.92 ft) [6] Cable outlet at large outer diameter of cooling jacket Cable outlet at small outer diameter of cooling jacket • Free cable ends, length 0.5 m (1.64 ft) [6] Cable outlet at large outer diameter of cooling jacket Cable outlet at small outer diameter of cooling jacket	**0** **1** **2** **3**

S1 = Continuous duty
S6 = Intermittent duty:
Type 1FE111/1FE114: Duty cycle time 2 min

For footnotes, see next page.

© Siemens AG 2017

Motor type (repeated)	Rated current for duty type		**Voltage Protection Module (VPM)**	**SINAMICS S120 Motor Module**	
				Required rated current	**Booksize format**
					Internal air cooling For other components, see SINAMICS S120 drive system
	I_{rated} S1 A	S6-40 % A		I_{rated} S1 to n_{max} A	Article No.
1FE1113-6WU...	60	91	VPM 120	60	**6SL3120-1TE26-0AA.**
1FE1113-6WX...	43	62	VPM 120	45	**6SL3120-1TE24-5AA.**
1FE1114-6WR...	108	159	VPM 120	132	**6SL3120-1TE31-3AA.**
1FE1114-6WT...	84	123	VPM 120	85	**6SL3120-1TE28-5AA.**
1FE1114-6WW...	58	85	VPM 120	60	**6SL3120-1TE26-0AA.**
1FE1115-6WT...	85	123	VPM 120	85	**6SL3120-1TE28-5AA.**
1FE1115-6WW...	60	87	VPM 120	60	**6SL3120-1TE26-0AA.**
1FE1116-6WR...	109	160	VPM 120	132	**6SL3120-1TE31-3AA.**
1FE1116-6WT...	84	123	VPM 120	85	**6SL3120-1TE28-5AA.**
1FE1116-6WW...	60	87	VPM 120	60	**6SL3120-1TE26-0AA.**
1FE1116-6WY...	45	65	VPM 120	45	**6SL3120-1TE24-5AA.**
1FE1143-8WM...	120	180	VPM 200	132	**6SL3120-1TE31-3AA.**
1FE1143-8WQ...	77	113	VPM 120	85	**6SL3120-1TE28-5AA.**
1FE1144-8WL...	133	193	VPM 200	200	**6SL3120-1TE32-0AA.**
1FE1144-8WQ...	100	146	VPM 200	132	**6SL3120-1TE31-3AA.**
1FE1144-8WT...	85	124	VPM 120	85	**6SL3120-1TE28-5AA.**
1FE1144-8WV...	71	103	VPM 120	85	**6SL3120-1TE28-5AA.**
1FE1145-8WN...	200	290 [10]	VPM 200	200	**6SL3120-1TE32-0AA.**
1FE1145-8WQ...	158	230	VPM 200	200	**6SL3120-1TE32-0AA.**
1FE1145-8WS...	130	188	VPM 200	132	**6SL3120-1TE31-3AA.**
1FE1145-8WE...	85	128	VPM 120	85	**6SL3120-1TE28-5AA.**
1FE1147-8WN...	200	290 [10]	VPM 200	200	**6SL3120-1TE32-0AA.**
1FE1147-8WQ...	158	230	VPM 200	200	**6SL3120-1TE32-0AA.**
1FE1147-8WS...	130	190	VPM 200	132	**6SL3120-1TE31-3AA.**

Single Motor Module	**1**
Double Motor Module	**2**
Version status	

9

[1] Standard scope of supply: Encapsulated winding with 2 × Pt1000 (1 × reserve).
[2] Full protection option, application example: Load at motor standstill, external tripping unit required; Article No.: 3RN1013-1GW10.
[3] Universal protection option: Full protection + NTC PT3-51F + NTC K227.
[4] Ordering spare stator parts: 1FE1…-…..-7.W.
[5] Ordering spare rotor parts: 1FE1…-…..-3W..
[6] For cable design, see Configuration Manual.
[7] Stator without cooling jacket on request.
[8] For moment of inertia with sleeve, see Configuration Manual.
[9] Moment of inertia for rotor with rotor sleeve d**.
[10] Observe the Motor Module limit.

© Siemens AG 2017

Selection and ordering data

Rated power for duty type P_{rated} S1 kW (hp)	S6-40 % kW (hp)	Rated torque M_{rated} S1 Nm (lb_f-ft)	S6-40 % Nm (lb_f-ft)	Rated speed n_{rated} rpm	Speed without VPM, max. $n_{max\ Inv}$ rpm	Speed, max. n_{max} rpm	SIMOTICS M-1FE1 synchronous built-in motors Article No.	Moment of inertia rotor J kgm^2 (lb_f-in-s^2)	Weight, approx. stator + rotor without sleeve m kg (lb)
SIMOTICS M-1FE1 High Speed series – Water cooling – ΔT = 105 K – Line voltage 400 V 3 AC, operation on Active Line Module									
12.6 (16.9)	17.6 (23.6)	5 (3.69)	7 (5.16)	24000	40000	40000	**1FE1051-4HC ■ 0 - 6 B A ■**	0.00045 (0.004)	4.1 (9.04)
10 (13.4)	14 (18.8)	5 (3.69)	7 (5.16)	19000	34100	40000	**1FE1051-4HF ■ 1 - 6 B A ■**	0.00045 (0.004)	4.1 (9.04)
6.5 (8.72)	8 (10.7)	6.5 (4.79)	9 (6.64)	9500	17000	30000	**1FE1051-4WN ■ 1 - 6 B A ■**	0.00057 (0.01)	4.2 (9.26)
31.4 (42.1)	35 (46.9)	12 (8.85)	15 (11.1)	25000	40000	40000 [9]	**1FE1052-4HD ■ 0 - 6 B A ■**	0.00087 (0.01)	7.15 (15.8)
23.9 (32.1)	29.8 (40.0)	12 (8.85)	15 (11.1)	19000	32200	40000 [9]	**1FE1052-4HG ■ 1 - 6 B A ■**	0.00087 (0.01)	7.15 (15.8)
17.5 (23.5)	19 (25.5)	13 (9.59)	17 (12.5)	12500	20700	30000	**1FE1052-4WK ■ 1 - 6 B A ■**	0.00110 (0.0097)	7.35 (16.2)
11 (14.8)	12 (16.1)	13 (9.59)	18 (13.3)	8000	13100	30000	**1FE1052-4WN ■ 1 - 6 B A ■**	0.00110 (0.0097)	7.35 (16.2)
25.5 (34.2)	32.5 (43.6)	18 (13.3)	23 (17.0)	13500	23100	40000 [9]	**1FE1053-4HH ■ 1 - 6 B A ■**	0.00128 (0.0113)	10.2 (22.5)
23 (30.8)	25 (33.5)	20 (14.8)	27 (19.9)	11000	14800	30000	**1FE1053-4WJ ■ 1 - 6 B A ■**	0.00163 (0.0144)	10.5 (23.1)
16.5 (22.1)	18 (24.1)	20 (14.8)	27 (19.9)	7900	12800	30000	**1FE1053-4WN ■ 1 - 6 B A ■**	0.00163 (0.0144)	10.5 (23.1)
28.5 (38.2)	28.5 (38.2)	28 (20.7)	40 (29.5)	9700	17500	24000	**1FE1072-4WH ■ 1 - 6 B A ■**	0.00287 (0.0254)	11.2 (24.7)
20 (26.8)	20 (26.8)	28 (20.7)	40 (29.5)	6800	12600	24000	**1FE1072-4WL ■ 1 - 6 B A ■**	0.00287 (0.0254)	11.2 (24.7)
16 (21.5)	16 (21.5)	28 (20.7)	40 (29.5)	5500	9900	24000	**1FE1072-4WN ■ 1 - 6 B A ■**	0.00287 (0.0254)	11.2 (24.7)
7.3 (9.79)	8.5 (11.4)	28 (20.7)	40 (29.5)	2500	5100	12600	**1FE1072-4WV ■ 1 - 6 B A ■**	0.00287 (0.0254)	11.2 (24.7)
45 (60.3)	45 (60.3)	44 (32.5)	67 (49.4)	9700	14800	24000	**1FE1073-4WL ■ 1 - 6 B A ■**	0.0043 (0.0381)	16 (35.3)
30 (40.2)	30 (40.2)	42 (31.0)	59 (43.5)	6800	11800	24000	**1FE1073-4WN ■ 1 - 6 B A ■**	0.0043 (0.0381)	16 (35.3)
15 (20.1)	15 (20.1)	45 (33.2)	64 (47.2)	3200	5500	14000	**1FE1073-4WT ■ 1 - 6 B A ■**	0.0043 (0.0381)	16 (35.3)
48 (64.4)	51 (68.4)	60 (44.3)	86 (63.4)	7700	13400	20000	**1FE1074-4WM ■ 1 - 6 B A ■**	0.00573 (0.05)	21 (46.3)
41 (55.0)	41 (55.0)	56 (41.3)	79 (58.3)	7000	12300	20000	**1FE1074-4WN ■ 1 - 6 B A ■**	0.00573 (0.05)	21 (46.3)
30 (40.2)	33 (44.3)	60 (44.3)	85 (62.7)	4800	8200	20000	**1FE1074-4WR ■ 1 - 6 B A ■**	0.00573 (0.05)	21 (46.3)
25.8 (34.6)	28 (37.5)	60 (44.3)	85 (62.7)	4100	7200	18000	**1FE1074-4WT ■ 1 - 6 B A ■**	0.00573 (0.05)	21 (46.3)
23.9 (32.1)	25 (33.5)	60 (44.3)	80 (59.0)	3800	6300	15500	**1FE1074-4WV ■ 1 - 6 B A ■**	0.00573 (0.05)	21 (46.3)
23.6 (31.6)	27 (36.2)	75 (55.3)	100 (73.8)	3000	5700	14000	**1FE1075-4WQ ■ 1 - 6 B A ■**	0.00741 (0.07)	25.5 (56.2)
33 (44.3)	37 (49.6)	42 (31.0)	55 (40.6)	7500	16500	20000	**1FE1082-4WF ■ 1 - 6 B A ■**	0.00559 (0.0495)	15.1 (33.3)
24.5 (32.9)	24.5 (32.9)	42 (31.0)	55 (40.6)	5600	10700	20000	**1FE1082-4WK ■ 1 - 6 B A ■**	0.00559 (0.0495)	15.1 (33.3)
15.5 (20.8)	15.5 (20.8)	42 (31.0)	55 (40.6)	3500	7800	20000	**1FE1082-4WN ■ 1 - 6 B A ■**	0.00559 (0.0495)	15.1 (33.3)
12 (16.1)	12 (16.1)	42 (31.0)	55 (40.6)	2700	5900	15000	**1FE1082-4WP ■ 1 - 6 B A ■**	0.00559 (0.0495)	15.1 (33.3)
8.8 (11.8)	8.8 (11.8)	42 (31.0)	55 (40.6)	2000	4500	11000	**1FE1082-4WR ■ 1 - 6 B A ■**	0.00559 (0.0495)	15.1 (33.3)
28 (37.5)	28 (37.5)	63 (46.5)	83 (61.2)	4200	9600	20000	**1FE1083-4WN ■ 1 - 6 B A ■**	0.00847 (0.0750)	22 (48.5)
38 (51.0)	38 (51.0)	84 (62.0)	110 (81.1)	4300	9800	20000	**1FE1084-4WN ■ 1 - 6 B A ■**	0.01118 (0.0989)	28.5 (62.8)
35 (46.9)	35 (46.9)	78 (57.5)	110 (81.1)	4300	8200	20000	**1FE1084-4WP ■ 1 - 6 B A ■**	0.01118 (0.0989)	28.5 (62.8)
30 (40.2)	30 (40.2)	84 (62.0)	110 (81.1)	3400	7600	18000	**1FE1084-4WQ ■ 1 - 6 B A ■**	0.01118 (0.0989)	28.5 (62.8)
26.4 (35.4)	26.4 (35.4)	84 (62.0)	110 (81.1)	3000	5900	15000	**1FE1084-4WT ■ 1 - 6 B A ■**	0.01118 (0.0989)	28.5 (62.8)
22.9 (30.7)	23 (30.8)	84 (62.0)	110 (81.1)	2600	4900	12000	**1FE1084-4WV ■ 1 - 6 B A ■**	0.01118 (0.0989)	28.5 (62.8)
38 (51.0)	38 (51.0)	105 (77.4)	138 (102)	3500	7700	18000	**1FE1085-4WN ■ 1 - 6 B A ■**	0.01388 (0.1228)	35 (77.2)
33 (44.3)	33 (44.3)	105 (77.4)	140 (103)	3000	6500	16000	**1FE1085-4WQ ■ 1 - 6 B A ■**	0.01388 (0.1228)	35 (77.2)
24 (32.2)	24 (32.2)	105 (77.4)	140 (103)	2200	4700	12000	**1FE1085-4WT ■ 1 - 6 B A ■**	0.01388 (0.1228)	35 (77.2)

• Standard protection: 2 × Pt1000 [1]	**1**
• Full protection: 2 × Pt1000 + 3 × PTC thermistor triplet [2]	**3**
• Universal protection [3]	**5**
• Operation without VPM module	**0**
• Operation with VPM module	**1**
• Delivery of stator + rotor [1) 4) 5)]	**6**
• Stator with cooling jacket [1) 7)]	**B**
• Without rotor sleeve	**A**
• Free cable ends, length 1.5 m (4.92 ft) [6] Cable outlet at large outer diameter of cooling jacket Cable outlet at small outer diameter of cooling jacket	 **0** **1**
• Free cable ends, length 0.5 m (1.64 ft) [6] Cable outlet at large outer diameter of cooling jacket Cable outlet at small outer diameter of cooling jacket	 **2** **3**

S1 = Continuous duty
S6 = Intermittent duty:
Type 1FE105/1FE107: Duty cycle time 1 min
Type 1FE108: Duty cycle time 2 min

For footnotes, see next page.

© Siemens AG 2017

Motor type (repeated)	Rated current for duty type I_{rated} S1 A	S6-40 % A	Voltage Protection Module (VPM)	SINAMICS S120 Motor Module Required rated current I_{rated} S1 to n_{max} A	Booksize format Internal air cooling For other components, see SINAMICS S120 drive system Article No.
1FE1051-4HC...	25	34.5	–	45 [8]	**6SL3120-1TE24-5AA.**
1FE1051-4HF...	21	29	VPM 120	45 [8]	**6SL3120-1TE24-5AA.**
1FE1051-4WN...	12	17	VPM 120	18 [8]	**6SL3120-1TE21-8AD.**
1FE1052-4HD...	57	75	–	132 [8]	**6SL3120-1TE31-3AA.**
1FE1052-4HG...	44	59	VPM 120	85 [8]	**6SL3120-1TE28-5AA.**
1FE1052-4WK...	30	39	VPM 120	45 [8]	**6SL3120-1TE24-5AA.**
1FE1052-4WN...	20	26	VPM 120	30 [8]	**6SL3120-1TE23-0AD.**
1FE1053-4HH...	46	63	VPM 120	85 [8]	**6SL3120-1TE28-5AA.**
1FE1053-4WJ...	36	49	VPM 120	45 [8]	**6SL3120-1TE24-5AA.**
1FE1053-4WN...	29	38	VPM 120	45 [8]	**6SL3120-1TE24-5AA.**
1FE1072-4WH...	64	96	VPM 120	85 [8]	**6SL3120-1TE28-5AA.**
1FE1072-4WL...	45	68	VPM 120	45	**6SL3120-1TE24-5AA.**
1FE1072-4WN...	36	54	VPM 120	45	**6SL3120-1TE24-5AA.**
1FE1072-4WV...	18	26.5	VPM 120	18	**6SL3120-1TE21-8AD.**
1FE1073-4WL...	83	124	VPM 120	132 [8]	**6SL3120-1TE31-3AA.**
1FE1073-4WN...	65	97	VPM 120	85 [8]	**6SL3120-1TE28-5AA.**
1FE1073-4WT...	30	44	VPM 120	30	**6SL3120-1TE23-0AD.**
1FE1074-4WM...	97	144	VPM 120	132	**6SL3120-1TE31-3AA.**
1FE1074-4WN...	91	136	VPM 120	132	**6SL3120-1TE31-3AA.**
1FE1074-4WR...	58	85	VPM 120	60	**6SL3120-1TE26-0AA.**
1FE1074-4WT...	53	77	VPM 120	60	**6SL3120-1TE26-0AA.**
1FE1074-4WV...	45	66	VPM 120	45	**6SL3120-1TE24-5AA.**
1FE1075-4WQ...	51	75	VPM 120	60	**6SL3120-1TE26-0AA.**
1FE1082-4WF...	81	115	VPM 120	85	**6SL3120-1TE28-5AA.**
1FE1082-4WK...	55	78	VPM 120	60	**6SL3120-1TE26-0AA.**
1FE1082-4WN...	42	60	VPM 120	45	**6SL3120-1TE24-5AA.**
1FE1082-4WP...	30	43	VPM 120	30	**6SL3120-1TE23-0AD.**
1FE1082-4WR...	24	34	VPM 120	30	**6SL3120-1TE23-0AD.**
1FE1083-4WN...	77	110	VPM 120	85	**6SL3120-1TE28-5AA.**
1FE1084-4WN...	105	150	VPM 120	132	**6SL3120-1TE31-3AA.**
1FE1084-4WP...	79	120	VPM 120	85	**6SL3120-1TE28-5AA.**
1FE1084-4WQ...	83	119	VPM 120	85	**6SL3120-1TE28-5AA.**
1FE1084-4WT...	60	85	VPM 120	60	**6SL3120-1TE26-0AA.**
1FE1084-4WV...	50	71	VPM 120	60	**6SL3120-1TE26-0AA.**
1FE1085-4WN...	105	150	VPM 120	132	**6SL3120-1TE31-3AA.**
1FE1085-4WQ...	85	120	VPM 120	85	**6SL3120-1TE28-5AA.**
1FE1085-4WT...	60	85	VPM 120	60	**6SL3120-1TE26-0AA.**

Single Motor Module	**1**
Double Motor Module	**2**
Version status	

[1] Standard scope of supply: Encapsulated winding with 2 × Pt1000 (1 × reserve).
[2] Full protection option, application example: Load at motor standstill, external tripping unit required; Article No.: 3RN1013-1GW10.
[3] Universal protection option: Full protection + NTC PT3-51F + NTC K227.
[4] Ordering spare stator parts: 1FE1…-…..-7.W.
[5] Ordering spare rotor parts: 1FE1…-…..-3W..
[6] For cable design, see Configuration Manual.
[7] Stator without cooling jacket on request.
[8] PWM clock cycle must be increased.
[9] Series reactor required, see Configuration Manual.

© Siemens AG 2017

Selection and ordering data

Rated power for duty type P_{rated} S1 kW (hp)	S6-40 % kW (hp)	Rated torque M_{rated} S1 Nm (lb_f-ft)	S6-40 % Nm (lb_f-ft)	Rated speed n_{rated} rpm	Speed without VPM, max. $n_{max\ Inv}$ rpm	Speed, max. n_{max} rpm	**SIMOTICS M-1FE1 synchronous built-in motors** Article No.	Moment of inertia rotor J kgm^2 (lb_f-in-s^2)	Weight, approx. stator + rotor without sleeve m kg (lb)
SIMOTICS M-1FE1 High Speed series – Water cooling – ΔT = 105 K – Line voltage 400 V 3 AC, operation on Active Line Module									
16 (21.5)	16 (21.5)	45 (33.2)	60 (44.3)	3400	7300	18000	**1FE1092-4WP ■ 1 - 6 B R ■**	0.00916 (0.08) [8]	30 (66.1)
10.5 (14.1)	10.5 (14.1)	50 (36.9)	64 (47.2)	2000	4100	10000	**1FE1092-4WV ■ 1 - 6 B R ■**	0.00916 (0.08) [8]	30 (66.1)
35.3 (47.3)	35 (46.9)	75 (55.3)	103 (76.0)	4500	9500	18000	**1FE1093-4WH ■ 1 - 6 B ■ ■**	0.01350 (0.12) [8]	41.6 (91.7)
27.5 (36.9)	27.5 (36.9)	75 (55.3)	103 (76.0)	3500	7200	18000	**1FE1093-4WM ■ 1 - 6 B ■ ■**	0.01350 (0.12) [8]	41.6 (91.7)
26 (34.9)	26 (34.9)	75 (55.3)	103 (76.0)	3300	6800	16000	**1FE1093-4WN ■ 1 - 6 B ■ ■**	0.01350 (0.12) [8]	41.6 (91.7)
46 (61.7)	46 (61.7)	100 (73.8)	137 (101)	4400	9200	18000	**1FE1094-4WK ■ 1 - 6 B ■ ■**	0.01808 (0.16) [8]	48.5 (107)
40 (53.6)	40 (53.6)	100 (73.8)	137 (101)	3800	7600	18000	**1FE1094-4WL ■ 1 - 6 B ■ ■**	0.01808 (0.16) [8]	48.5 (107)
26 (34.9)	26 (34.9)	100 (73.8)	125 (92.2)	2500	5100	13000	**1FE1094-4WS ■ 1 - 6 B ■ ■**	0.01808 (0.16) [8]	48.5 (107)
18 (24.1)	18 (24.1)	95 (70.1)	119 (87.8)	1800	3900	10000	**1FE1094-4WU ■ 1 - 6 B ■ ■**	0.01808 (0.16) [8]	48.5 (107)
46 (61.7)	46 (61.7)	125 (92.2)	171 (126)	3500	7300	18000	**1FE1095-4WN ■ 1 - 6 B ■ ■**	0.02242 (0.2) [8]	56.8 (125)
52 (69.7)	52 (69.7)	150 (111)	206 (152)	3300	6800	16000	**1FE1096-4WN ■ 1 - 6 B ■ ■**	0.02700 (0.24) [8]	64.2 (142)
38.5 (51.6)	45 (60.3)	102 (75.2)	142 (105)	3600	7200	16000	**1FE1103-4WN ■ 1 - 6 B A ■**	0.01589 (0.14)	34 (75.0)
35 (46.9)	38 (51.0)	100 (73.8)	130 (95.9)	3300	6200	15000	**1FE1103-4WQ ■ 1 - 6 B A ■**	0.01589 (0.14)	34 (75.0)
26 (34.9)	29 (38.9)	100 (73.8)	130 (95.9)	2500	4700	12000	**1FE1103-4WT ■ 1 - 6 B A ■**	0.01589 (0.14)	34 (75.0)
75 (101)	75 (101)	136 (100)	175 (129)	5300	9300	16000	**1FE1104-4WL ■ 1 - 6 B A ■**	0.02098 (0.19)	42.5 (93.7)
54 (72.4)	64 (85.8)	136 (100)	189 (139)	3800	7700	16000	**1FE1104-4WN ■ 1 - 6 B A ■**	0.02098 (0.19)	42.5 (93.7)
53.4 (71.6)	64 (85.8)	170 (125)	236 (174)	3000	6100	16000	**1FE1105-4WN ■ 1 - 6 B A ■**	0.02608 (0.23)	52 (115)
46.3 (62.1)	55 (73.8)	170 (125)	230 (170)	2600	4900	12200	**1FE1105-4WQ ■ 1 - 6 B A ■**	0.02608 (0.23)	52 (115)
41 (55.0)	44 (59.0)	170 (125)	230 (170)	2300	4300	10500	**1FE1105-4WS ■ 1 - 6 B A ■**	0.02608 (0.23)	52 (115)
72.6 (97.4)	85 (114)	204 (150)	283 (209)	3400	6900	16000	**1FE1106-4WN ■ 1 - 6 B A ■**	0.03147 (0.28)	61.5 (136)
62 (83.1)	66 (88.5)	204 (150)	270 (199)	2900	5400	14000	**1FE1106-4WR ■ 1 - 6 B A ■**	0.03147 (0.28)	61.5 (136)
56.5 (75.8)	60 (80.5)	200 (148)	270 (199)	2700	5100	12500	**1FE1106-4WS ■ 1 - 6 B A ■**	0.03147 (0.28)	61.5 (136)
25 (33.5)	30 (40.2)	200 (148)	270 (199)	1200	2500	6000	**1FE1106-4WY ■ 1 - 6 B A ■**	0.03147 (0.28)	61.5 (136)
63 (84.5)	75 (101)	200 (148)	275 (203)	3000	6100	14000	**1FE1124-4WN ■ 1 - 6 B A ■**	0.05112 (0.45)	62.6 (138)
52.4 (70.3)	55.9 (75.0)	200 (148)	275 (203)	2500	4900	12000	**1FE1124-4WQ ■ 1 - 6 B A ■**	0.05112 (0.45)	62.6 (138)
78.5 (105)	90 (121)	250 (184)	345 (254)	3000	5800	14000	**1FE1125-4WN ■ 1 - 6 B A ■**	0.06337 (0.56)	76 (168)
65.5 (87.8)	82 (110)	250 (184)	345 (254)	2500	5300	12500	**1FE1125-4WP ■ 1 - 6 B A ■**	0.06337 (0.56)	76 (168)
57.6 (77.2)	65 (87.2)	250 (184)	345 (254)	2200	4200	10000	**1FE1125-4WQ ■ 1 - 6 B A ■**	0.06337 (0.56)	76 (168)
94 (126)	112 (150) [9]	300 (221)	410 (302) [9]	3000	6100	14000	**1FE1126-4WN ■ 1 - 6 B A ■**	0.07604 (0.67)	90 (198)
78.5 (105)	100 (134) [9]	300 (221)	410 (302) [9]	2500	5400	12500	**1FE1126-4WP ■ 1 - 6 B A ■**	0.07604 (0.67)	90 (198)
63 (84.5)	82 (110)	300 (221)	410 (302)	2000	4400	10000	**1FE1126-4WQ ■ 1 - 6 B A ■**	0.07604 (0.67)	90 (198)

• Standard protection: 2 × Pt1000 [1] • Full protection: 2 × Pt1000 + 3 × PTC thermistor triplet [2] • Universal protection [3]	**1** **3** **5**
• Delivery of stator + rotor [1) 4) 5)]	**6**
• Stator with cooling jacket [1) 7)]	**B**
• Without rotor sleeve • Without rotor sleeve, d_i = 80 mm (3.15 in) for 1FE109.-4W... only	**A** **R**
• Free cable ends, length 1.5 m (4.92 ft) [6] Cable outlet at large outer diameter of cooling jacket Cable outlet at small outer diameter of cooling jacket • Free cable ends, flexible, length 0.5 m (1.64 ft) [6] Cable outlet at large outer diameter of cooling jacket Cable outlet at small outer diameter of cooling jacket	**0** **1** **2** **3**

S1 = Continuous duty
S6 = Intermittent duty:
Type 1FE109/1FE110/1FE112: Duty cycle time 2 min

For footnotes, see next page.

© Siemens AG 2017

Motor type (repeated)	Rated current for duty type		**Voltage Protection Module (VPM)**	**SINAMICS S120 Motor Module**	
				Required rated current	**Booksize format**
					Internal air cooling For other components, see SINAMICS S120 drive system
	I_{rated} S1 A	S6-40 % A		I_{rated} S1 to n_{max} A	Article No.
1FE1092-4WP...	41	58	VPM 120	45	**6SL3120-1TE24-5AA.**
1FE1092-4WV...	24	35	VPM 120	30	**6SL3120-1TE23-0AD.**
1FE1093-4WH...	83	120	VPM 120	85	**6SL3120-1TE28-5AA.**
1FE1093-4WM...	64	92	VPM 120	85	**6SL3120-1TE28-5AA.**
1FE1093-4WN...	60	86	VPM 120	60	**6SL3120-1TE26-0AA.**
1FE1094-4WK...	108	156	VPM 120	132	**6SL3120-1TE31-3AA.**
1FE1094-4WL...	90	130	VPM 120	132	**6SL3120-1TE31-3AA.**
1FE1094-4WS...	60	85	VPM 120	60	**6SL3120-1TE26-0AA.**
1FE1094-4WU...	45	64	VPM 120	45	**6SL3120-1TE24-5AA.**
1FE1095-4WN...	108	156	VPM 120	132	**6SL3120-1TE31-3AA.**
1FE1096-4WN...	120	173	VPM 120	132	**6SL3120-1TE31-3AA.**
1FE1103-4WN...	84	127	VPM 120	85	**6SL3120-1TE28-5AA.**
1FE1103-4WQ...	68	98	VPM 120	85	**6SL3120-1TE28-5AA.**
1FE1103-4WT...	53	75	VPM 120	60	**6SL3120-1TE26-0AA.**
1FE1104-4WL...	140	200	VPM 200	200	**6SL3120-1TE32-0AA.**
1FE1104-4WN...	120	181	VPM 200	132	**6SL3120-1TE31-3AA.**
1FE1105-4WN...	120	180	VPM 200	132	**6SL3120-1TE31-3AA.**
1FE1105-4WQ...	95	135	VPM 120	132	**6SL3120-1TE31-3AA.**
1FE1105-4WS...	84	120	VPM 120	85	**6SL3120-1TE28-5AA.**
1FE1106-4WN...	159	240	VPM 200	200	**6SL3120-1TE32-0AA.**
1FE1106-4WR...	128	184	VPM 200	132	**6SL3120-1TE31-3AA.**
1FE1106-4WS...	120	170	VPM 200	132	**6SL3120-1TE31-3AA.**
1FE1106-4WY...	60	85	VPM 200	60	**6SL3120-1TE26-0AA.**
1FE1124-4WN...	135	198	VPM 200	200	**6SL3120-1TE32-0AA.**
1FE1124-4WQ...	110	162	VPM 200	132	**6SL3120-1TE31-3AA.**
1FE1125-4WN...	162	240	VPM 200	200	**6SL3120-1TE32-0AA.**
1FE1125-4WP...	147	215	VPM 200	200	**6SL3120-1TE32-0AA.**
1FE1125-4WQ...	116	169	VPM 200	132	**6SL3120-1TE31-3AA.**
1FE1126-4WN...	200	295 [9]	VPM 200	200	**6SL3120-1TE32-0AA.**
1FE1126-4WP...	180	265 [9]	VPM 200	200	**6SL3120-1TE32-0AA.**
1FE1126-4WQ...	147	215	VPM 200	200	**6SL3120-1TE32-0AA.**

Single Motor Module	**1**
Double Motor Module	**2**
Version status	

[1] Standard scope of supply: Encapsulated winding with 2 × Pt1000 (1 × reserve).
[2] Full protection option, application example: Load at motor standstill, external tripping unit required; Article No.: 3RN1013-1GW10.
[3] Universal protection option: Full protection + NTC PT3-51F + NTC K227.
[4] Ordering spare stator parts: 1FE1…-…..-7.W.
[5] Ordering spare rotor parts: 1FE1…-…..-3W..
[6] For cable design, see Configuration Manual.
[7] Stator without cooling jacket on request.
[8] For moment of inertia for version R without rotor sleeve d_i = 80 mm (3.15 in), see Configuration Manual.
[9] Observe the Motor Module limit.

© Siemens AG 2017

SIMOTICS M-1FE2 High Torque series synchronous built-in motors – Water cooling

Selection and ordering data

Rated power for duty type		Rated torque	Torque at low speeds for duty type	Rated speed	Speed without VPM, max.	Speed, max.	**SIMOTICS M-1FE2 synchronous built-in motors**	Moment of inertia rotor with C sleeve	Weight, stator with cooling jacket
P_{rated}		M_{rated}		n_{rated}	$n_{max\ Inv}$	n_{max}		J	m
S1	S6-40 %	S1	S6-40 %						
kW (hp)	kW (hp)	Nm (lb_f-ft)	Nm (lb_f-ft)	rpm	rpm	rpm	Article No.	kgm^2 (lb_f-in-s^2)	kg (lb)
SIMOTICS M-1FE2 High Torque series – Water cooling – ΔT = 100 K – Line voltage 400 V 3 AC, operation on Active Line Module									
68 (91.2)	85.9 (115)	640 (472)	916 (676)	1000	2000	4200	**1FE2182-8LH ■ ■ - ■ ■ C 1**	0.75 (6.64)	243 (536)
34 (45.6)	40.8 (54.7)	650 (479)	925 (682)	500	1000	2400	**1FE2182-8LN ■ ■ - ■ ■ C 1**	0.75 (6.64)	110 (243)
88 (118)	110 (148)	840 (620)	1190 (878)	1000	2000	4200	**1FE2183-8LH ■ ■ - ■ ■ C 1**	0.9 (7.97)	130 (287)
44.5 (59.7)	52.4 (70.3)	840 (620)	1197 (883)	500	1000	2400	**1FE2183-8LN ■ ■ - ■ ■ C 1**	0.9 (7.97)	130 (287)
105 (141)	130.9 (176)	1000 (738)	1425 (1051)	1000	2000	4200	**1FE2184-8LH ■ ■ - ■ ■ C 1**	1.05 (9.29)	150 (331)
85 (114)	106.4 (143)	1010 (745)	1437 (1060)	800	1600	4010	**1FE2184-8LK ■ ■ - ■ ■ C 1**	1.05 (9.29)	150 (331)
53 (71.1)	62.8 (84.2)	1010 (745)	1437 (1060)	500	1000	2400	**1FE2184-8LN ■ ■ - ■ ■ C 1**	1.05 (9.29)	150 (331)
122 (164)	149.7 (201)	1160 (856)	1653 (1219)	1000	1900	4200	**1FE2185-8LH ■ ■ - ■ ■ C 1**	1.2 (10.6)	170 (375)
87 (117)	106.3 (143)	1180 (870)	1665 (1228)	700	1400	3440	**1FE2185-8LL ■ ■ - ■ ■ C 1**	1.2 (10.6)	170 (375)
62 (83.1)	73.8 (99.0)	1180 (870)	1646 (1214)	500	1000	2420	**1FE2185-8LN ■ ■ - ■ ■ C 1**	1.2 (10.6)	170 (375)
142 (190)	171.7 (230)	1350 (996)	1932 (1425)	1000	1900	4200	**1FE2186-8LH ■ ■ - ■ ■ C 1**	1.35 (11.9)	190 (419)
86 (115)	104.9 (141)	1370 (1010)	1936 (1428)	600	1200	3000	**1FE2186-8LM ■ ■ - ■ ■ C 1**	1.35 (11.9)	190 (419)
72 (96.6)	84.8 (114)	1370 (1010)	1941 (1432)	500	1000	2400	**1FE2186-8LN ■ ■ - ■ ■ C 1**	1.35 (11.9)	190 (419)
159 (213)	193.7 (260)	1510 (1114)	2151 (1586)	1000	1900	4200	**1FE2187-8LH ■ ■ - ■ ■ C 1**	1.49 (13.2)	210 (463)
80 (107)	100 (134)	1530 (1128)	2156 (1590)	500	1100	2670	**1FE2187-8LN ■ ■ - ■ ■ C 1**	1.49 (13.2)	210 (463)

Winding protection
- Standard protection 2 × Pt1000 [1)] — **1**
- Full protection: 2 × Pt1000 + 3 × PTC thermistor triplet [2)] — **3**
- Universal protection [3)] — **5**

Type of connection (cable outlet [6)])
- Cable outlet large outer diameter or for version without cooling jacket — **0**
- Cable outlet small outer diameter — **1**

Delivery
- Delivery of stator + rotor [1) 4) 5) 7)] — **1**

Stator
- Stator without cooling jacket — **A**
- Stator with cooling jacket — **C**

Rotor
- Standard rotor sleeve — **C**

Version status

S1 = Continuous duty
S6 = Intermittent duty

Additional options
Z = X15 ... cable length 1.5 m (4.92 ft) [8)]
Z = T00 ... Rotor pre-balanced

For footnotes, see next page.

© Siemens AG 2017

Motor type (repeated)	Rated current for duty type		**Voltage Protection Module (VPM)**	**SINAMICS S120 Motor Module**		
				Quantity Motor Module	Required rated current	**Booksize format** Internal air cooling For other components, see SINAMICS S120 drive system
	I_{rated} S1 A	S6-40 % A			I_{rated} S1 to n_{max} A	Article No.
1FE2182-8LH...	145	214	VPM 200	1	200	**6SL3120-1TE32-0AA.**
1FE2182-8LN...	73	108	VPM 120	1	85	**6SL3120-1TE28-5AA.**
1FE2183-8LH...	189	278	VPM 200	1	200	**6SL3120-1TE32-0AA.**
1FE2183-8LN...	95	140	VPM 200	1	132	**6SL3120-1TE31-3AA.**
1FE2184-8LH...	225	333	2 × VPM 200	2	2 × 132	**6SL3120-1TE31-3AA.**
1FE2184-8LK...	190	280	VPM 200	1	200	**6SL3120-1TE32-0AA.**
1FE2184-8LN...	114	168	VPM 200	1	132	**6SL3120-1TE31-3AA.**
1FE2185-8LH...	250	368	2 × VPM 200	2	2 × 132	**6SL3120-1TE31-3AA.**
1FE2185-8LL...	189	278	VPM 200	1	200	**6SL3120-1TE32-0AA.**
1FE2185-8LN...	132	194	VPM 200	1	132	**6SL3120-1TE31-3AA.**
1FE2186-8LH...	290	424	2 × VPM 200	2	2 × 200	**6SL3120-1TE32-0AA.**
1FE2186-8LM...	192	283	VPM 200	1	200	**6SL3120-1TE32-0AA.**
1FE2186-8LN...	154	227	VPM 200	1	200	**6SL3120-1TE32-0AA.**
1FE2187-8LH...	325	479	2 × VPM 200	2	2 × 200	**6SL3120-1TE32-0AA.**
1FE2187-8LN...	190	280	VPM 200	1	200	**6SL3120-1TE32-0AA.**

Single Motor Module	**1**
Double Motor Module	**2**
Version status	

1) Standard scope of supply: Impregnated winding with 2 × Pt1000 (1 × reserve).
2) Full protection option, application example: Load at motor standstill, external tripping unit required; Article No.: 3RN1013-1GW10.
3) Universal protection option: Full protection + NTC PT3-51F + NTC K227.
4) Ordering spare stator parts: 1FE2…-…..-2...
5) Ordering spare rotor parts: 1FE2…-…..-3...
6) For cable design, see Configuration Manual, standard cable length = 0.5 m (1.64 ft).
7) Standard rotor is not pre-balanced.
8) Not for 1FE2187-8LH.

© Siemens AG 2017

VPM Voltage Protection Module

Overview

The voltage protection function is deployed on 1FE1 motors and on the synchronous version of 2SP1 motor spindles with an EMF of $\hat{U}$ > 820 V to 2000 V (U_{rms} 570 V to 1400 V) in order to limit the DC link voltage in the drive system in the event of a fault.

If the line voltage fails with the motor operating at maximum speed, or if the drive system pulses are suppressed as a result of a line voltage failure, the synchronous motor feeds energy at high voltage back into the DC link.

The VPM detects that the DC link voltage is too high (DC > 820 V) and shorts the three motor feeder cables in order to brake the motor. The power remaining in the motor is converted to heat via the short circuit in the VPM and motor.

Integration

The VPM can be operated in conjunction with SINAMICS S120, and with 1FE motors and with 2SP1 motor spindles.

The VPM must be installed between the motor and drive system (maximum distance from drive system 1.5 m (4.92 ft)). 6FX8 shielded motor supply cables must be used in combination with the VPM.

System requirements for operating 1FE motors and 2SP1 motor spindles with SINAMICS S120:

- SINAMICS S120
- SINUMERIK 840D sl from SW version 1.3 and higher

Technical specifications

Article No.	6SN1113-1AA00-1JA1	6SN1113-1AA00-1KA1	6SN1113-1AA00-1KC1
Product brand name	Voltage Protection Module		
Product type designation	VPM 120	VPM 200	VPM 200 DYNAMIK
Rated current, perm.	120 A	200 A	200 A
Short-circuit current, perm.	90 A	200 A	200 A
Degree of protection in accordance with DIN EN 60529 (IEC 60529)	IP20	IP20	IP20
Humidity class based on DIN EN 60721-3-3	Class 3K5, condensation and icing excluded. Low air temperature 0 °C (32 °F).		
Ambient temperature			
• Storage	-25 ... +55 °C (-13 ... +131 °F)	-25 ... +55 °C (-13 ... +131 °F)	-25 ... +55 °C (-13 ... +131 °F)
• Transport	-25 ... +55 °C (-13 ... +131 °F)	-25 ... +55 °C (-13 ... +131 °F)	-25 ... +55 °C (-13 ... +131 °F)
• Operation	0 ... 55 °C (32 ...131 °F)	0 ... 55 °C (32 ...131 °F)	0 ... 55 °C (32 ...131 °F)
Dimensions			
• Height	300 mm (11.8 in)	300 mm (11.8 in)	300 mm (11.8 in)
• Width	150 mm (5.91 in)	250 mm (9.84 in)	250 mm (9.84 in)
• Depth	180 mm (7.09 in)	190 mm (7.48 in)	260 mm (10.2 in)
Weight, approx.	6 kg (13.2 lb)	11 kg (24.3 lb)	12 kg (26.5 lb)
Certificate of suitability, according to	cULus	cULus	cULus

Selection and ordering data

Description	Article No.
Voltage Protection Module	
• VPM 120	**6SN1113-1AA00-1JA1**
• VPM 200	**6SN1113-1AA00-1KA1**
• VPM 200 DYNAMIK For large cable cross-sections up to 50 mm^2	**6SN1113-1AA00-1KC1**

© Siemens AG 2017

Overview

Cooling principle

For the design of the cooling units, see the Configuration Manual.

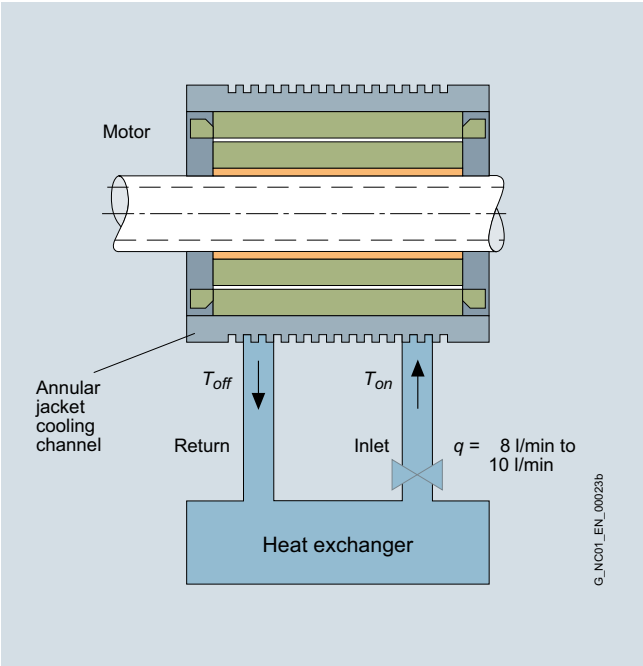

Liquid cooling

These are third-party products whose fundamental suitability is familiar to us. It goes without saying that equivalent products from other manufacturers may be used. Our recommendations are to be seen as helpful information, not as requirements or regulations. We do not warrant the composition, nature, state, or quality of third-party products.

Please get in touch with the cooler manufacturers listed below for technical information.

Cooler manufacturers
ait-deutschland GmbH www.kkt-chillers.com
BKW Kälte-Wärme-Versorgungstechnik GmbH www.bkw-kuema.de
DELTATHERM Hirmer GmbH www.deltatherm.com
Glen Dimplex Deutschland GmbH **RIEDEL Kältetechnik Division** www.riedel-cooling.com
Helmut Schimpke und Team Industriekühlanlagen GmbH + Co. KG www.schimpke.com
Hydac System GmbH www.hydac.com
Hyfra Industriekühlanlagen GmbH www.hyfra.com
Pfannenberg GmbH www.pfannenberg.com

© Siemens AG 2017

SIMOTICS M-1PH8 asynchronous motors – SH 80 – Forced ventilation

Dimensional drawings

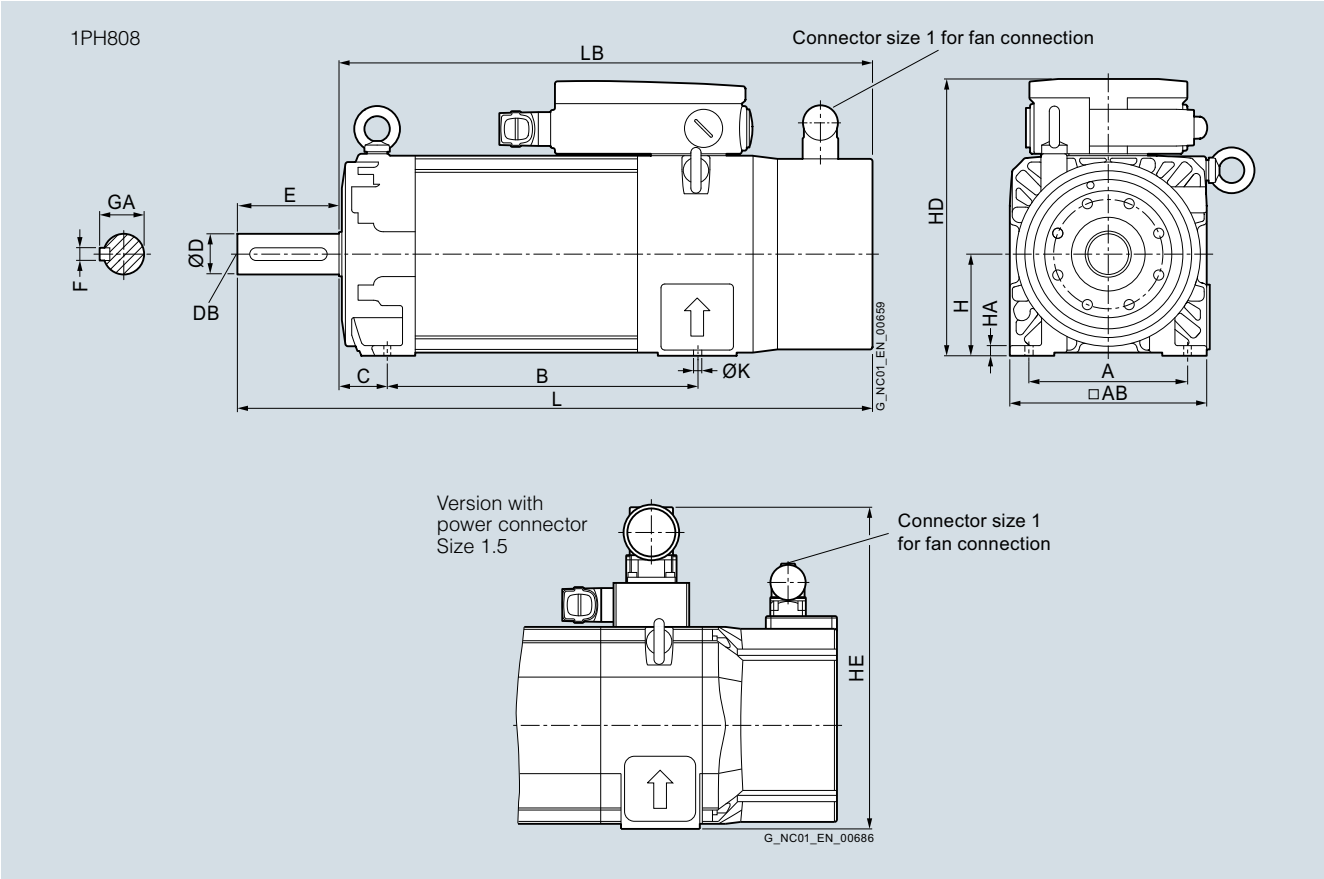

For motor		Dimensions in mm (inches)								
Shaft height	Type	IEC	A	AB	B	C	H	HA	HD	HE
1PH8, type of construction IM B3, forced ventilation										
80	1PH8083		125 (4.92)	155 (6.10)	194 (7.64)	38 (1.50)	80 (3.15)	8 (0.31)	216 (8.50)	253.5 (9.98)
	1PH8087				244 (9.61)					

					Shaft extension DE				
Shaft height	Type	IEC	L	LB	K	**D**	DB	E	F	GA
80	1PH8083		455 (17.91)	375 (14.76)	10 (0.39)	**32 (1.26)**	M12	80 (3.15)	10 (0.39)	35 (1.38)
	1PH8087		505 (19.88)	425 (16.73)						

© Siemens AG 2017

Dimensional drawings

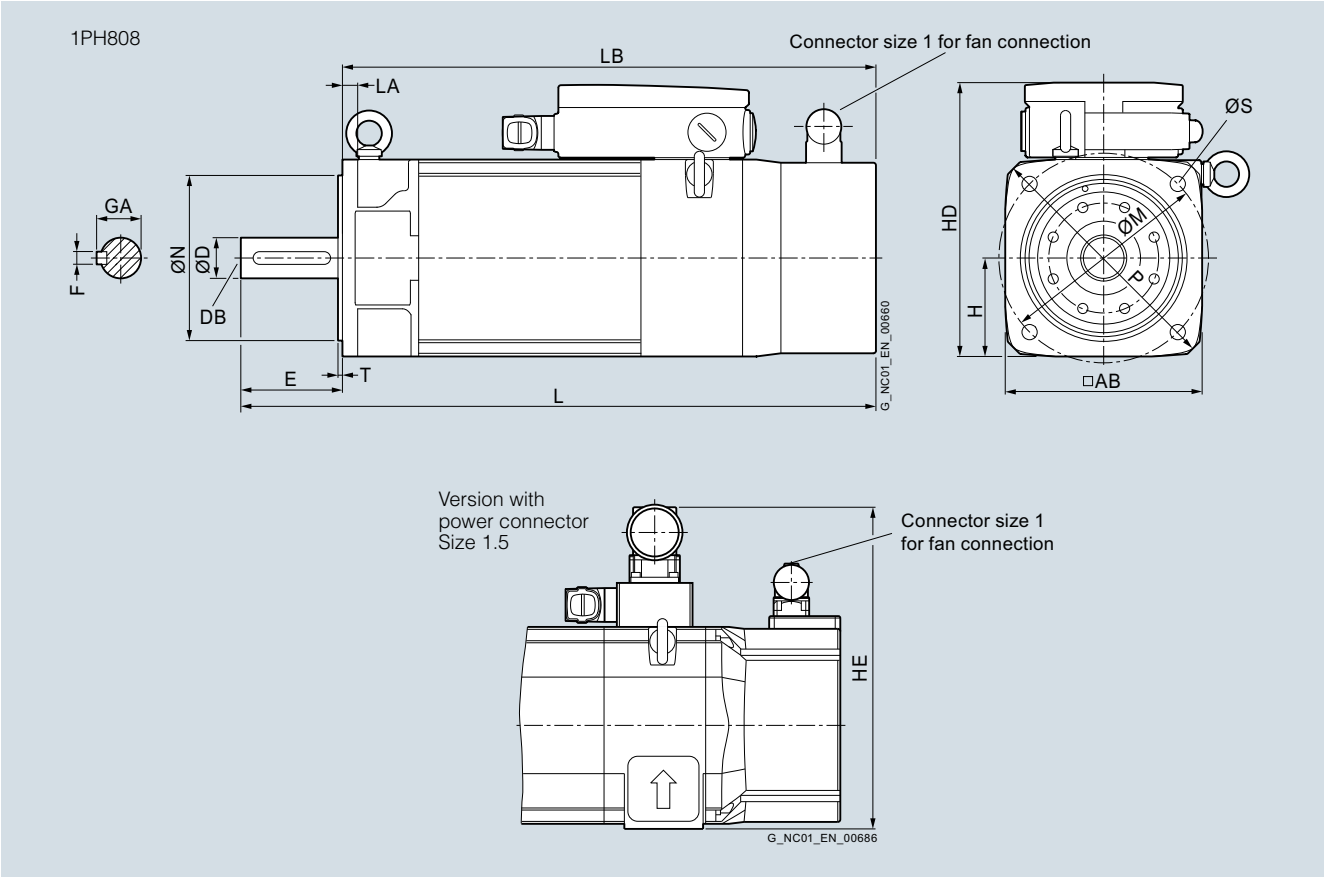

For motor		Dimensions in mm (inches)									
Shaft height	Type	IEC	AB	H	HD	HE	L	LA	LB	M	N
1PH8, type of construction IM B5, forced ventilation											
80	1PH8083		155 (6.10)	77.5 (3.05)	213.5 (8.41)	251 (9.88)	455 (17.91)	12 (0.47)	375 (14.76)	165 (6.50)	130 (5.12)
	1PH8087						505 (19.88)		425 (16.73)		

						Shaft extension DE				
Shaft height	Type	IEC	P	S	T	**D**	DB	E	F	GA
80	1PH8083		200 (7.87)	12 (0.47)	3.5 (0.14)	**32 (1.26)**	M12	80 (3.15)	10 (0.39)	35 (1.38)
	1PH8087									

© Siemens AG 2017

SIMOTICS M-1PH8 asynchronous motors – SH 80 – Water cooling

Dimensional drawings

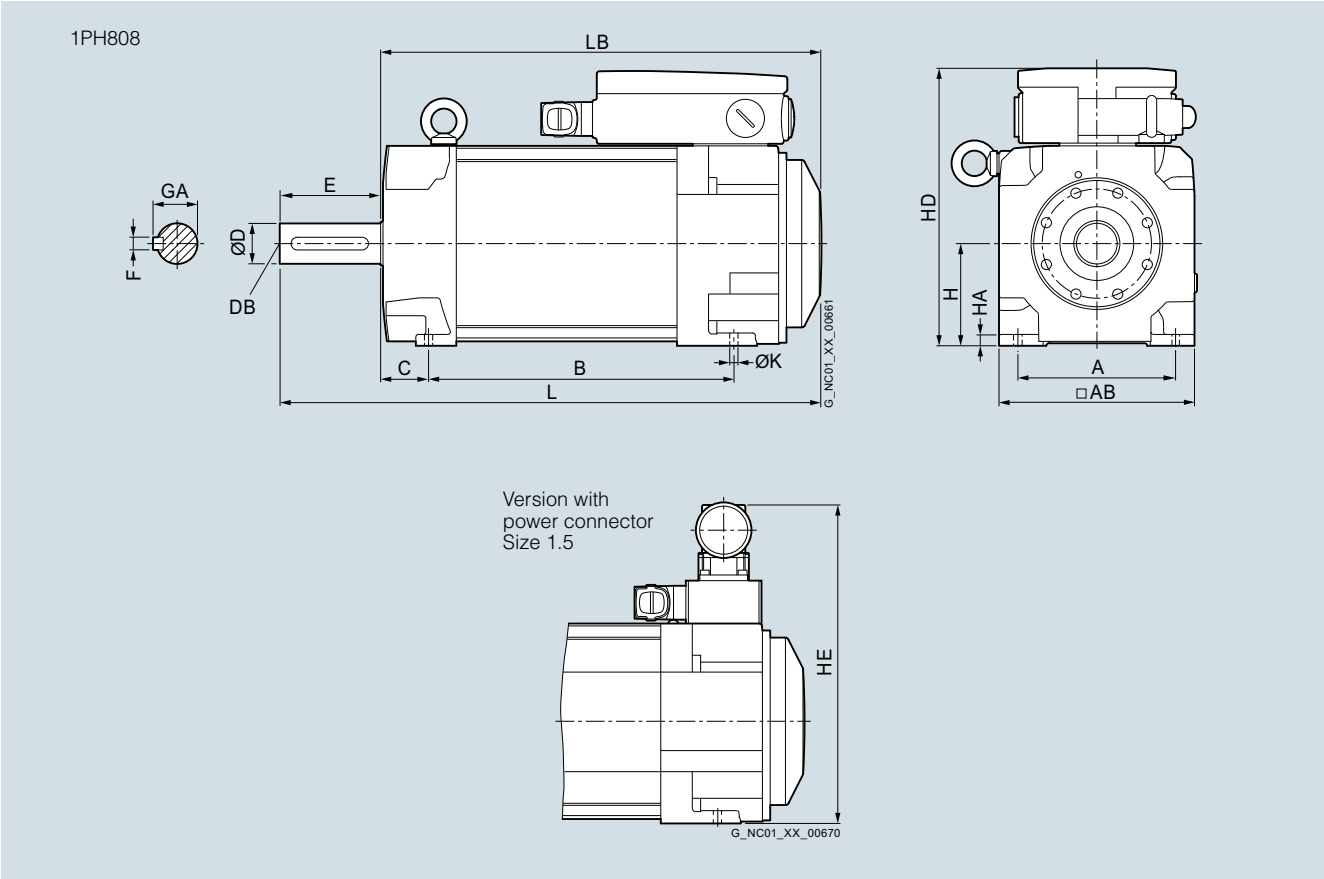

For motor		Dimensions in mm (inches)								
Shaft height	Type	IEC	A	AB	B	C	H	HA	HD	HE
1PH8, type of construction IM B3, water cooling										
80	1PH8083		125 (4.92)	155 (6.10)	194 (7.64)	38 (1.50)	80 (3.15)	8 (0.31)	216 (8.50)	253.5 (9.98)
	1PH8087				244 (9.61)					

						Shaft extension DE				
Shaft height	Type	IEC	K	L	LB	**D**	DB	E	F	GA
80	1PH8083		10 (0.39)	381.5 (15.02)	301.5 (11.87)	**32 (1.26)**	M12	80 (3.15)	10 (0.39)	35 (1.38)
	1PH8087			431.5 (16.99)	351.5 (13.84)					

© Siemens AG 2017

Dimensional drawings

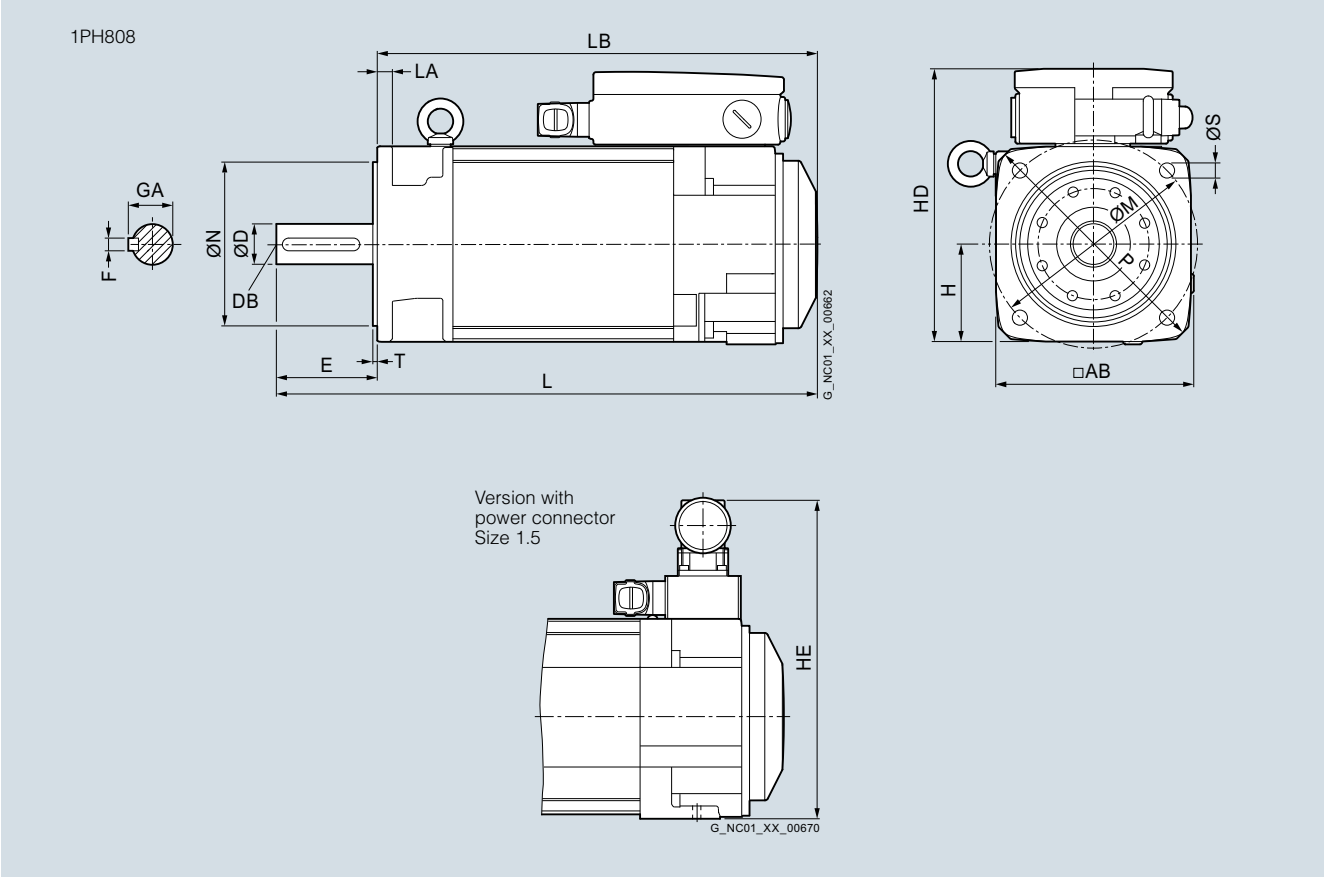

For motor		Dimensions in mm (inches)									
Shaft height	Type	IEC	AB	H	HD	HE	L	LA	LB	M	N
1PH8, type of construction IM B5, water cooling											
80	1PH8083		155 (6.10)	77.5 (3.05)	213.5 (8.41)	251 (9.88)	381.5 (15.02)	12 (0.47)	301.5 (11.87)	165 (6.50)	130 (5.12)
	1PH8087						431.5 (16.99)		351.5 (13.84)		

						Shaft extension DE				
Shaft height	Type	IEC	P	S	T	**D**	DB	E	F	GA
80	1PH8083		200 (7.87)	12 (0.47)	3.5 (0.14)	**32 (1.26)**	M12	80 (3.15)	10 (0.39)	35 (1.38)
	1PH8087									

© Siemens AG 2017

SIMOTICS M-1PH8 asynchronous motors – SH 100 – Forced ventilation

Dimensional drawings

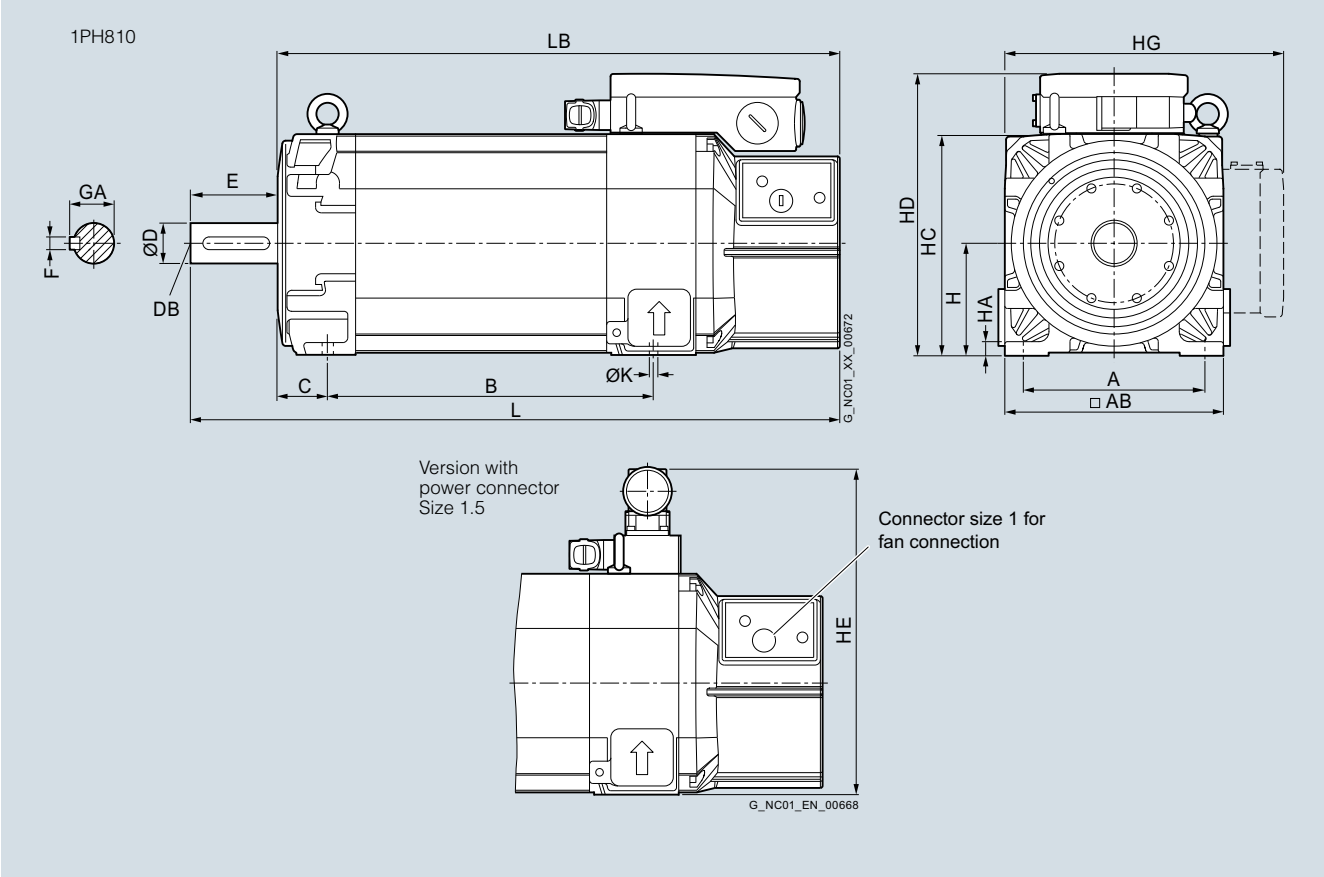

For motor		Dimensions in mm (inches)									
Shaft height	Type	IEC	A	AB	C	B	H	HA	HC	HD	HE
1PH8, type of construction IM B3, forced ventilation											
100	1PH8101		160 (6.30)	196 (7.72)	43 (1.69)	167 (6.57)	100 (3.94)	11 (0.43)	198 (7.80)	252 (9.92)	294 (11.57)
	1PH8103					202.5 (7.97)					
	1PH8105					262 (10.31)					
	1PH8107					297.5 (11.71)					

							Shaft extension DE				
Shaft height	Type	IEC	HG	L	K	LB	**D**	DB	E	F	GA
100	1PH8101		276.5 (10.89)	449.5 (17.70)	12 (0.47)	369.5 (14.55)	**38 (1.50)**	M12	80 (3.15)	10 (0.39)	41 (1.61)
	1PH8103			485 (19.09)		405 (15.94)					
	1PH8105			544.5 (21.44)		464.5 (18.29)					
	1PH8107			580 (22.83)		500 (19.69)					

© Siemens AG 2017

Dimensional drawings

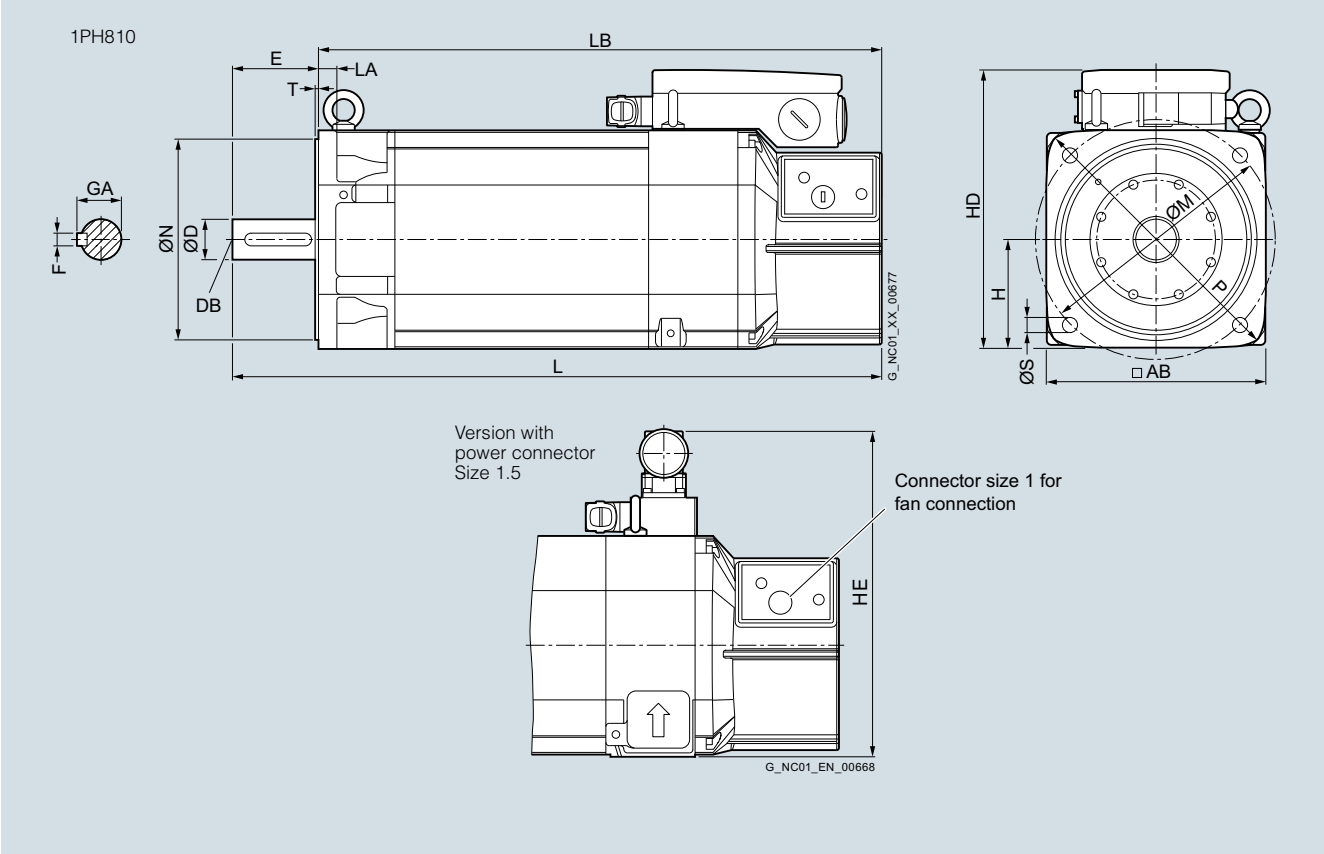

For motor		Dimensions in mm (inches)									
Shaft height	Type	IEC	AB	H	HD	HE	L	LA	LB	M	N
1PH8, type of construction IM B5, forced ventilation											
100	1PH8101		196 (7.72)	98 (3.86)	250 (9.84)	292 (11.50)	449.5 (17.70)	16 (0.63)	369.5 (14.55)	215 (8.46)	180 (7.09)
	1PH8103						485 (19.09)		405 (15.94)		
	1PH8105						544.5 (21.44)		464.5 (18.29)		
	1PH8107						580 (22.83)		500 (19.69)		

						Shaft extension DE				
Shaft height	Type	IEC	P	S	T	**D**	DB	E	F	GA
100	1PH8101		250 (9.84)	14 (0.55)	4 (0.16)	**38 (1.50)**	M12	80 (3.15)	10 (0.39)	41 (1.61)
	1PH8103									
	1PH8105									
	1PH8107									

© Siemens AG 2017

SIMOTICS M-1PH8 asynchronous motors – SH 100 – Forced ventilation

Dimensional drawings

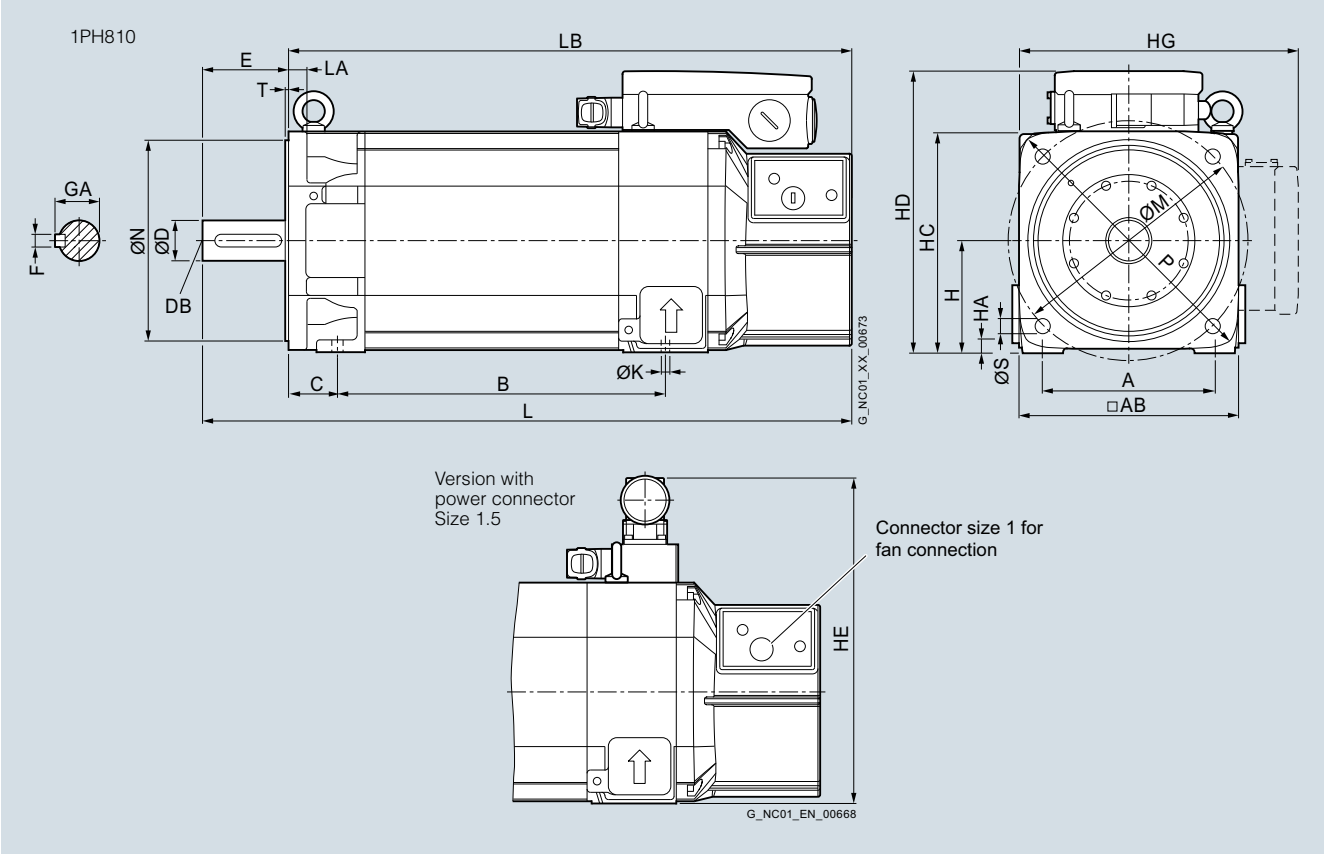

For motor		Dimensions in mm (inches)												
Shaft height	Type	IEC	A	AB	B	C	H	HA	HC	HD	HE	HG	K	L
1PH8, type of construction IM B35, forced ventilation														
100	1PH8101		160 (6.30)	196 (7.72)	167 (6.57)	43 (1.69)	100 (3.94)	11 (0.43)	198 (7.80)	252 (9.92)	294 (11.57)	276.5 (10.89)	12 (0.47)	449.5 (17.70)
	1PH8103				202.5 (7.97)									485 (19.09)
	1PH8105				262 (10.31)									544.5 (21.44)
	1PH8107				297.5 (11.71)									580 (22.83)

										Shaft extension DE				
Shaft height	Type	IEC	LA	LB	M	N	P	S	T	**D**	DB	E	F	GA
100	1PH8101		16 (0.63)	369.5 (14.55)	215 (8.46)	180 (7.09)	250 (9.84)	14 (0.55)	4 (0.16)	**38 (1.50)**	M12	80 (3.15)	10 (0.39)	41 (1.61)
	1PH8103			405 (15.94)										
	1PH8105			464.5 (18.29)										
	1PH8107			500 (19.69)										

© Siemens AG 2017

Dimensional drawings

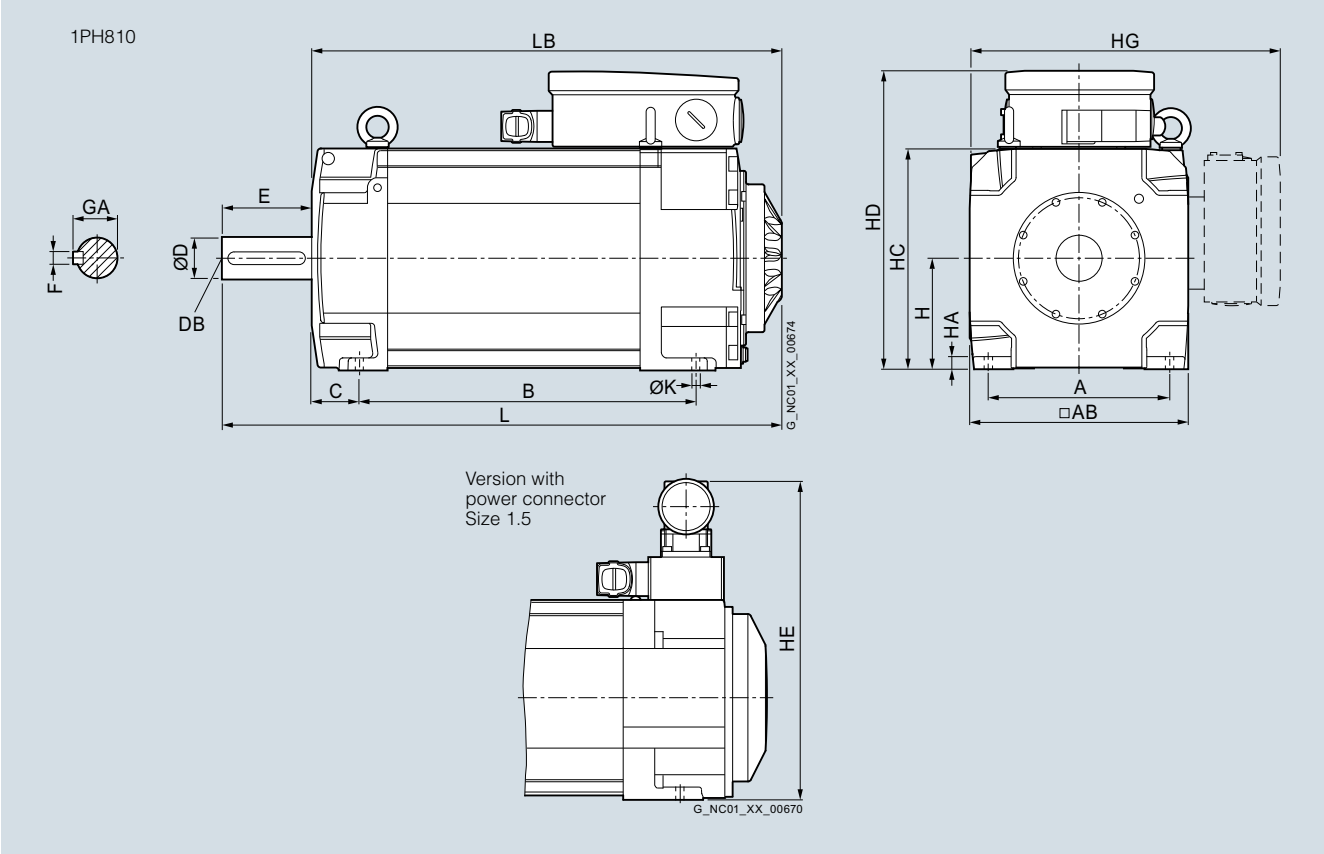

For motor		Dimensions in mm (inches)									
Shaft height	Type	IEC	A	AB	B	C	H	HA	HC	HD	HE
1PH8, type of construction IM B3, water cooling											
100	1PH8101		160 (6.30)	196 (7.72)	167 (6.57)	43 (1.69)	100 (3.94)	11 (0.43)	198 (7.80)	266.5 (10.49)	294 (11.57)
	1PH8103				202.5 (7.97)						
	1PH8105				262 (10.31)						
	1PH8107				297.5 (11.71)						

							Shaft extension DE				
Shaft height	Type	IEC	HG	K	L	LB	**D**	DB	E	F	GA
100	1PH8101		276.5 (10.89)	12 (0.47)	369.5 (14.55)	289.5 (11.40)	**38 (1.50)**	M12	80 (3.15)	10 (0.39)	41 (1.61)
	1PH8103				405 (15.94)	325 (12.80)					
	1PH8105				464.5 (18.29)	384.5 (15.14)					
	1PH8107				500 (19.69)	420 (16.54)					

© Siemens AG 2017

SIMOTICS M-1PH8 asynchronous motors – SH 100 – Water cooling

Dimensional drawings

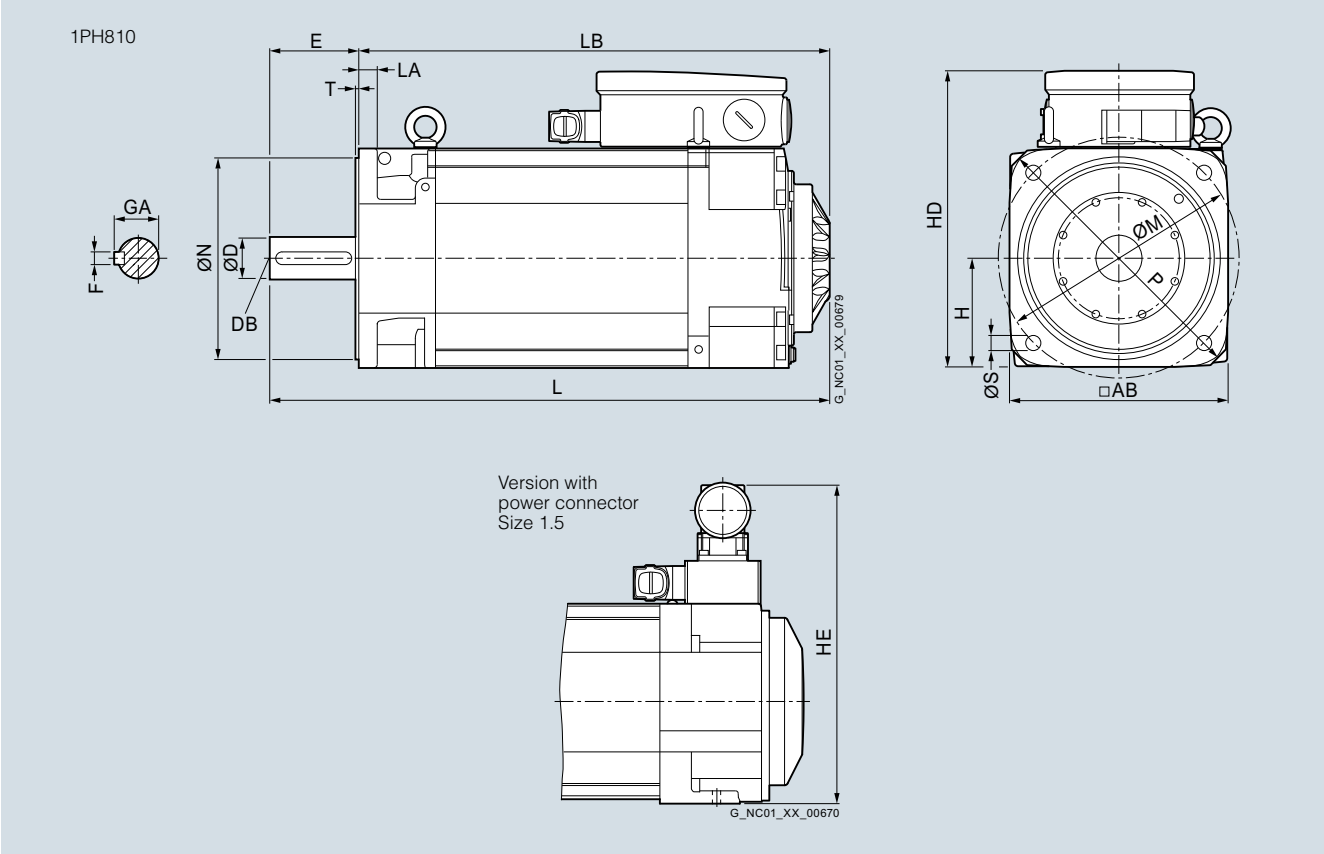

For motor		Dimensions in mm (inches)									
Shaft height	Type	IEC	AB	H	HD	HE	L	LA	LB	M	N
1PH8, type of construction IM B5, water cooling											
100	1PH8101		196 (7.72)	98 (3.86)	264.5 (10.41)	292 (11.50)	369.5 (14.55)	16 (0.63)	289.5 (11.40)	215 (8.46)	180 (7.09)
	1PH8103						405 (15.94)		325 (12.80)		
	1PH8105						464.5 (18.29)		384.5 (15.14)		
	1PH8107						500 (19.69)		420 (16.54)		

						Shaft extension DE				
Shaft height	Type	IEC	P	S	T	**D**	DB	E	F	GA
100	1PH8101		250 (9.84)	14 (0.55)	4 (0.16)	**38 (1.50)**	M12	80 (3.15)	10 (0.39)	41 (1.61)
	1PH8103									
	1PH8105									
	1PH8107									

© Siemens AG 2017

Dimensional drawings

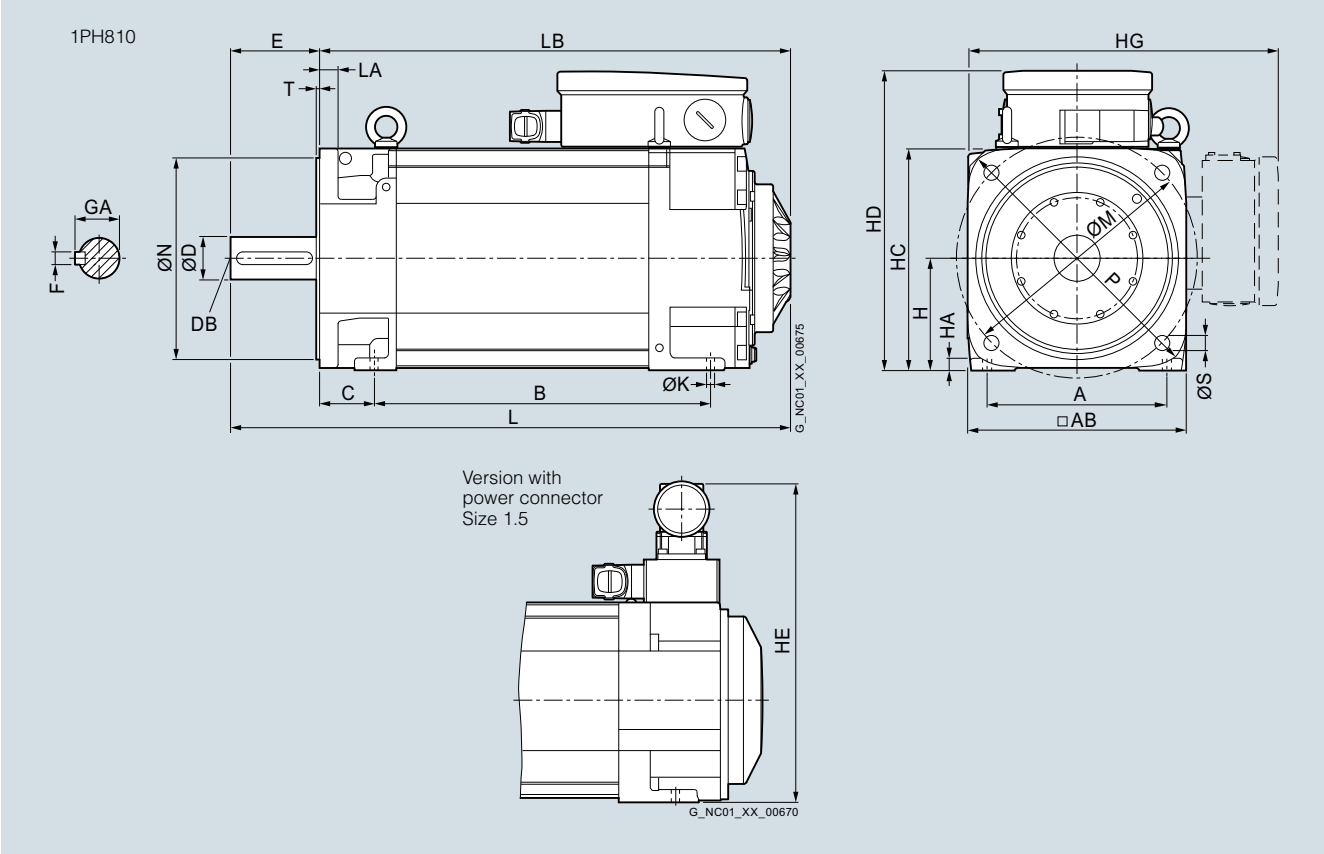

For motor		Dimensions in mm (inches)												
Shaft height	Type	IEC	A	AB	B	C	H	HA	HC	HD	HE	HG	K	L
1PH8, type of construction IM B35, water cooling														
100	1PH8101		160 (6.30)	196 (7.72)	167 (6.57)	43 (1.69)	100 (3.94)	11 (0.43)	198 (7.80)	266.5 (10.49)	294 (11.57)	276.5 (10.89)	12 (0.47)	369.5 (14.55)
	1PH8103				202.5 (7.97)									405 (15.94)
	1PH8105				262 (10.31)									464.5 (18.29)
	1PH8107				297.5 (11.71)									500 (19.69)

										Shaft extension DE				
Shaft height	Type	IEC	LA	LB	M	N	P	S	T	**D**	DB	E	F	GA
100	1PH8101		16 (0.63)	289.5 (11.40)	215 (8.46)	180 (7.09)	250 (9.84)	14 (0.55)	4 (0.16)	**38 (1.50)**	M12	80 (3.15)	10 (0.39)	41 (1.61)
	1PH8103			325 (12.80)										
	1PH8105			384.5 (15.14)										
	1PH8107			420 (16.54)										

© Siemens AG 2017

SIMOTICS M-1PH8 asynchronous and synchronous motors – SH 132 – Forced ventilation

Dimensional drawings

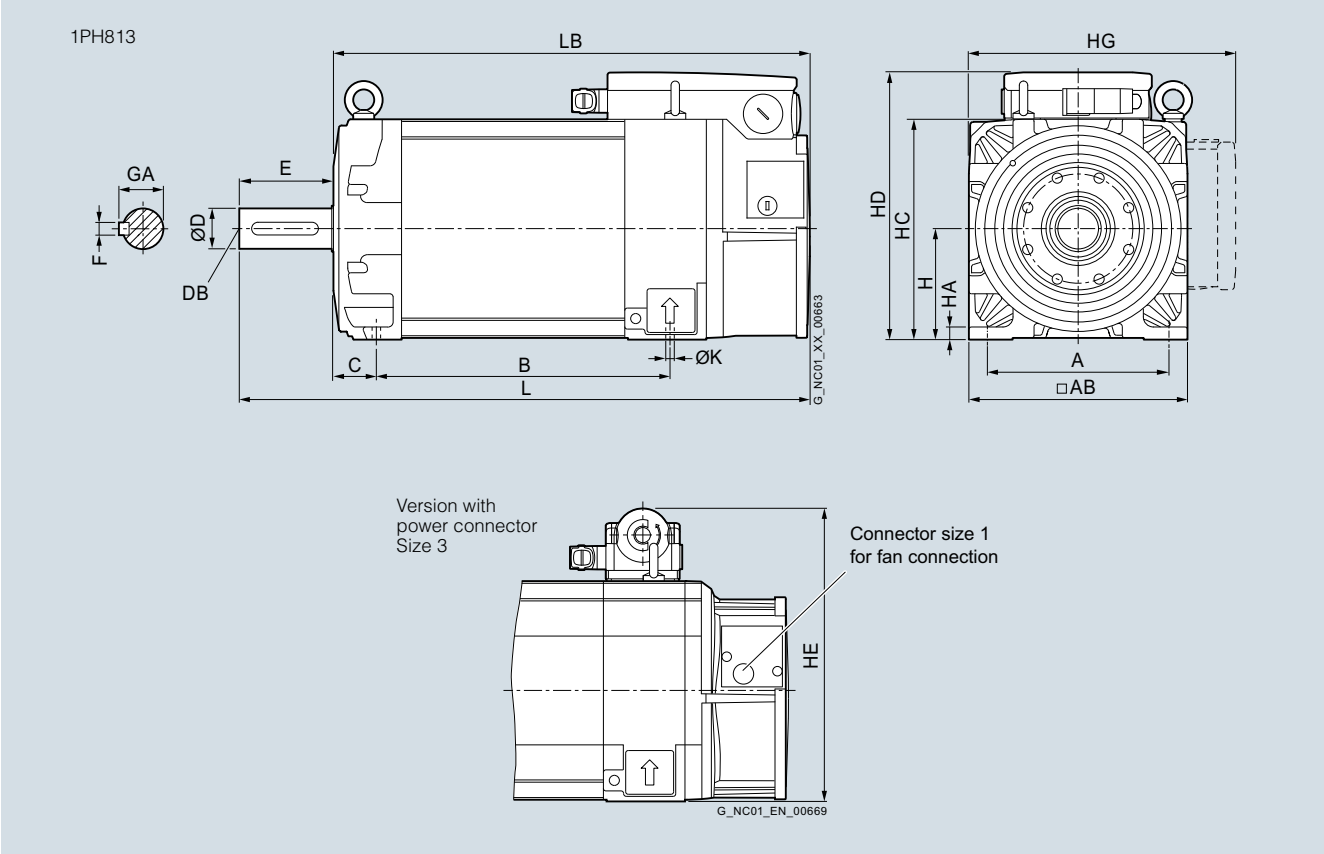

9

For motor		Dimensions in mm (inches)									
Shaft height	Type	IEC	A	AB	B	C	H	HA	HC	HD	HE
1PH8, type of construction IM B3, forced ventilation											
132	1PH8131		216 (8.50)	260 (10.24)	220.5 (8.68)	53 (2.09)	132 (5.20)	15 (0.59)	262 (10.31)	317.5 (12.50)	347 (13.66)
	1PH8133				265.5 (10.45)						
	1PH8135				310.5 (12.22)						
	1PH8137				350.5 (13.80)						

							Shaft extension DE				
Shaft height	Type	IEC	HG	K	L	LB	**D**	DB	E	F	GA
132	1PH8131		357.5 (14.07)	12 (0.47)	549 (21.61)	439 (17.28)	**48 (1.89)**	M16	110 (4.33)	14 (0.55)	51.5 (2.03)
	1PH8133				594 (23.39)	484 (19.06)					
	1PH8135				639 (25.16)	529 (20.83)					
	1PH8137				679 (26.73)	569 (22.40)					

© Siemens AG 2017

Dimensional drawings

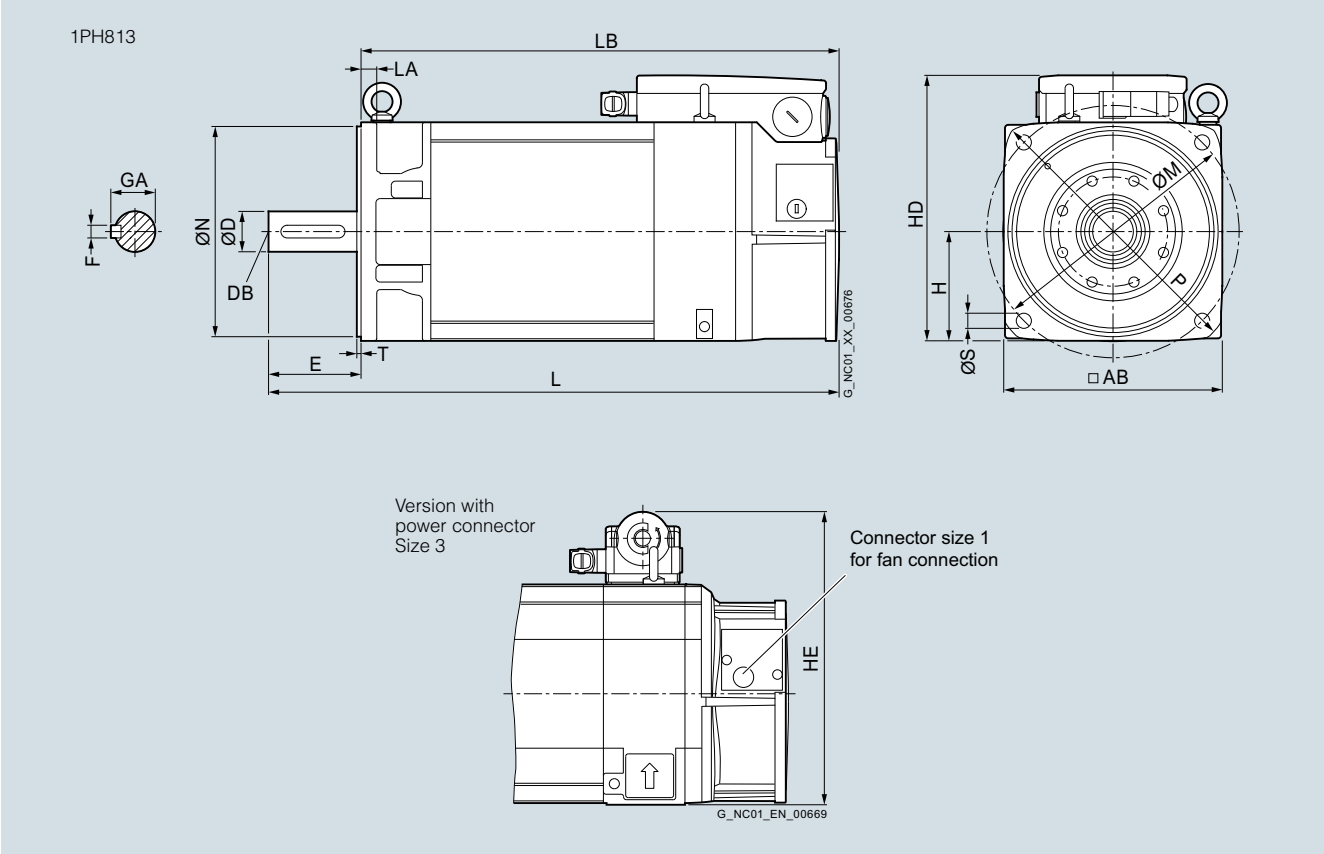

For motor		Dimensions in mm (inches)									
Shaft height	Type	IEC	AB	H	HD	HE	L	LA	LB	M	N
1PH8, type of construction IM B5, forced ventilation											
132	1PH8131		260 (10.24)	130 (5.12)	315.5 (12.42)	345 (13.58)	549 (21.61)	18 (0.71)	439 (17.28)	300 (11.81)	250 (9.84)
	1PH8133						594 (23.39)		484 (19.06)		
	1PH8135						639 (25.16)		529 (20.83)		
	1PH8137						679 (26.73)		569 (22.40)		

						Shaft extension DE				
Shaft height	Type	IEC	P	S	T	**D**	DB	E	F	GA
132	1PH8131		340 (13.39)	18 (0.71)	5 (0.20)	**48 (1.89)**	M16	110 (4.33)	14 (0.55)	51.5 (2.03)
	1PH8133									
	1PH8135									
	1PH8137									

© Siemens AG 2017

SIMOTICS M-1PH8 asynchronous and synchronous motors – SH 132 – Forced ventilation

Dimensional drawings

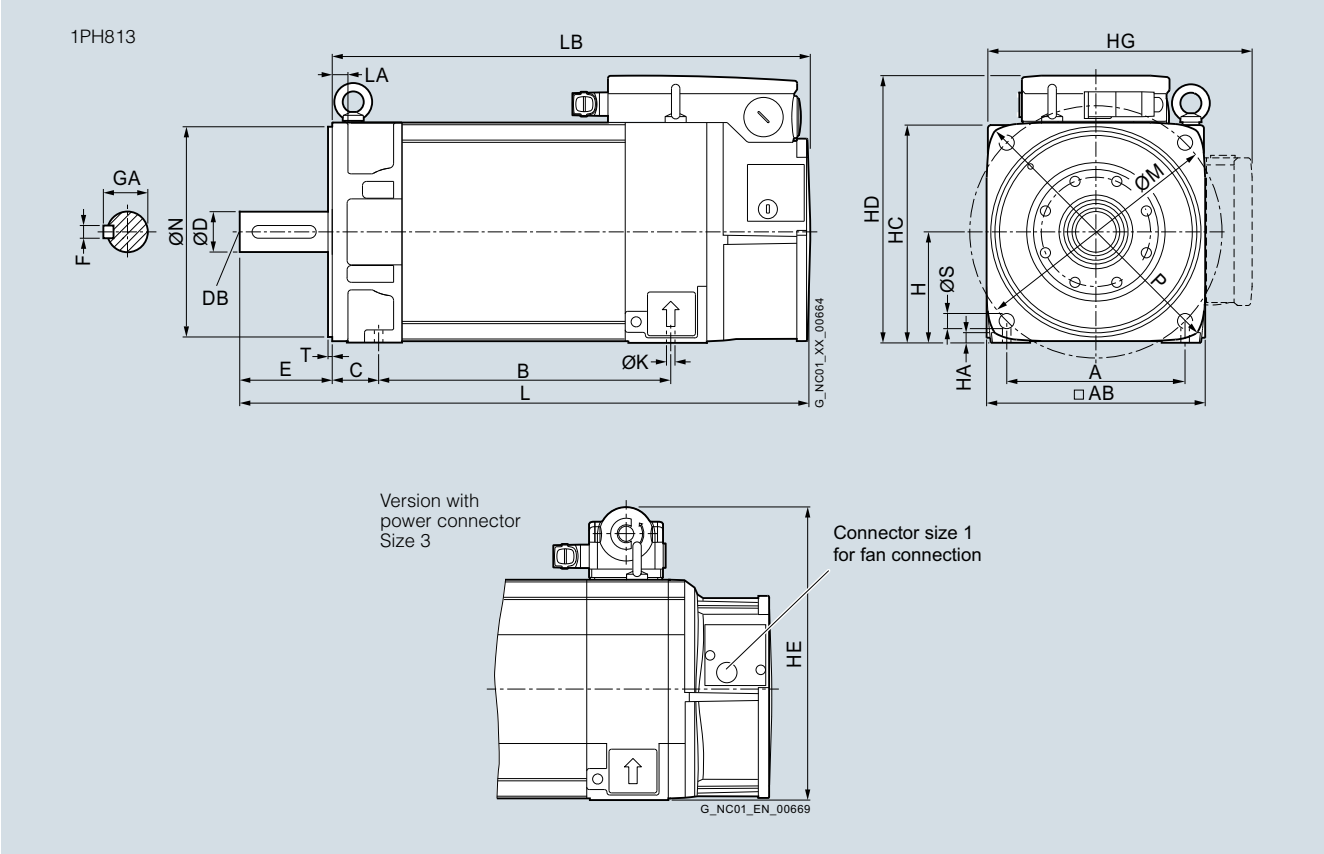

For motor		Dimensions in mm (inches)												
Shaft height	Type	IEC	A	AB	B	C	H	HA	HC	HD	HE	HG	K	L
1PH8, type of construction IM B35, forced ventilation														
132	1PH8131		216 (8.50)	260 (10.24)	220.5 (8.68)	53 (2.09)	132 (5.20)	15 (0.59)	262 (10.31)	317.5 (12.50)	347 (13.66)	357.5 (14.07)	12 (0.47)	549 (21.61)
	1PH8133				265.5 (10.45)									594 (23.39)
	1PH8135				310.5 (12.22)									639 (25.16)
	1PH8137				350.5 (13.80)									679 (26.73)

										Shaft extension DE				
Shaft height	Type	IEC	LA	LB	M	N	P	S	T	**D**	DB	E	F	GA
132	1PH8131		18 (0.71)	439 (17.28)	300 (11.81)	250 (9.84)	340 (13.39)	18 (0.71)	5 (0.20)	**48 (1.89)**	M16	110 (4.33)	14 (0.55)	51.5 (2.03)
	1PH8133			484 (19.06)										
	1PH8135			529 (20.83)										
	1PH8137			569 (22.40)										

© Siemens AG 2017

Dimensional drawings

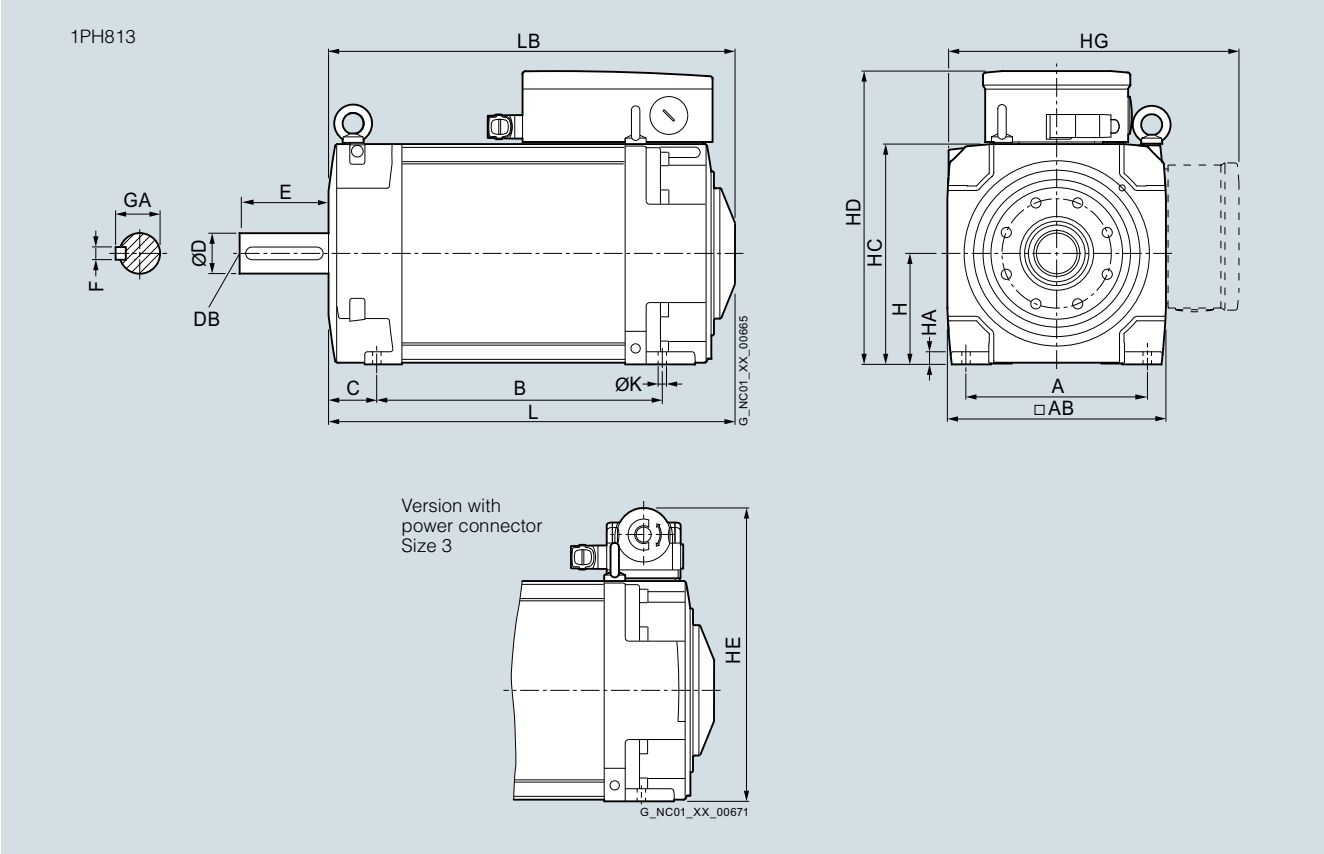

For motor		Dimensions in mm (inches)									
Shaft height	Type	IEC	A	AB	B	C	H	HA	HC	HD	HE
1PH8, type of construction IM B3, water cooling											
132	1PH8131		216 (8.50)	260 (10.24)	220.5 (8.68)	53 (2.09)	132 (5.20)	15 (0.59)	262 (10.31)	347.5 (13.68)	347 (13.66)
	1PH8133				265.5 (10.45)						
	1PH8135				310.5 (12.22)						
	1PH8137/ 1PH8138				350.5 (13.80)						

							Shaft extension DE				
Shaft height	Type	IEC	HG	K	L	LB	**D**	DB	E	F	GA
132	1PH8131		357.5 (14.07)	12 (0.47)	457.5 (18.01)	347.5 (13.68)	**48 (1.89)**	M16	110 (4.33)	14 (0.55)	51.5 (2.03)
	1PH8133				502.5 (19.78)	392.5 (15.45)					
	1PH8135				547.5 (21.56)	437.5 (17.22)					
	1PH8137/ 1PH8138				587.5 (23.13)	477.5 (18.80)					

© Siemens AG 2017

SIMOTICS M-1PH8 asynchronous and synchronous motors – SH 132 – Water cooling

Dimensional drawings

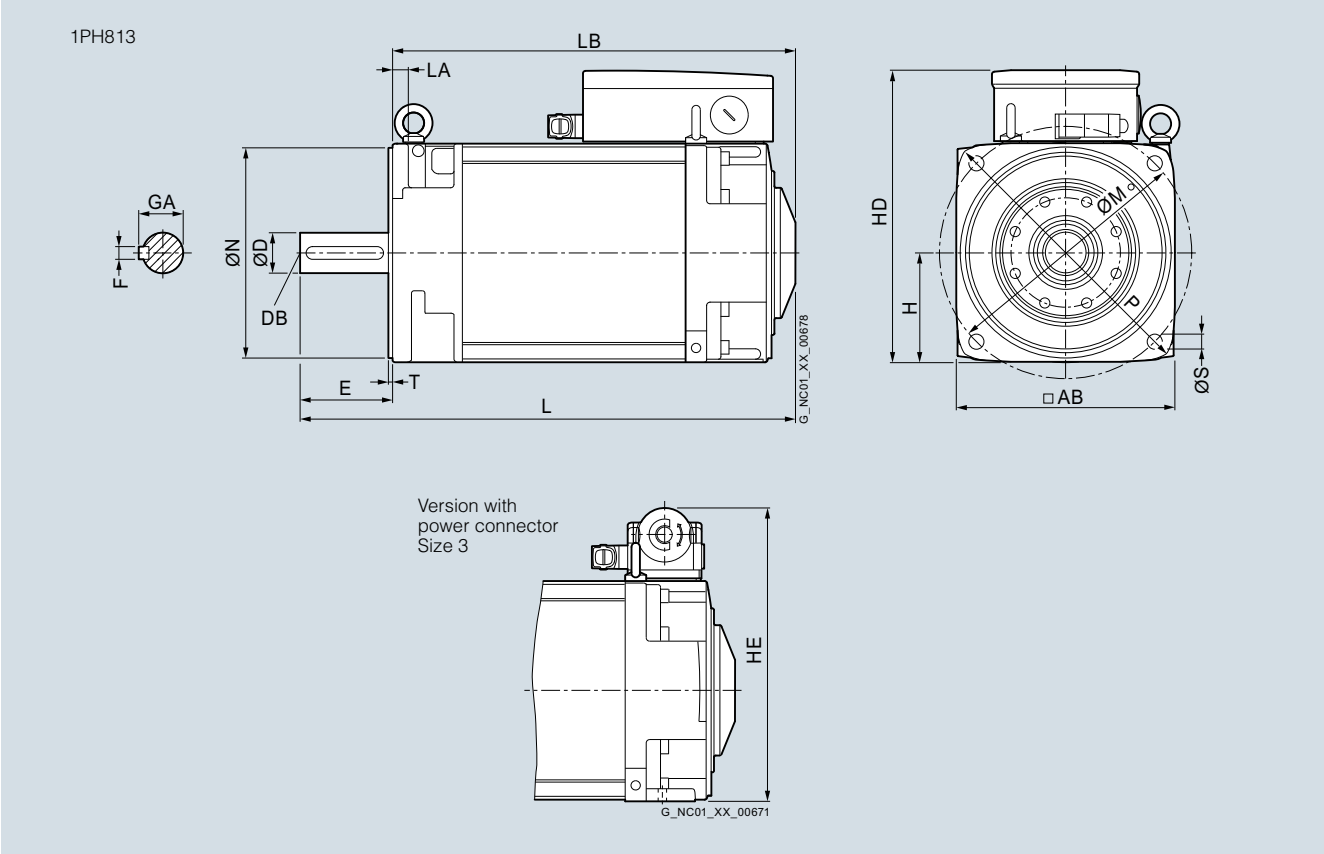

For motor		Dimensions in mm (inches)									
Shaft height	Type	IEC	AB	H	HD	HE	L	LA	LB	M	N
1PH8, type of construction IM B5, water cooling											
132	1PH8131		260 (10.24)	132 (5.20)	345.5 (13.60)	345 (13.58)	457.5 (18.01)	18 (0.71)	347.5 (13.68)	300 (11.81)	250 (9.84)
	1PH8133						502.5 (19.78)		392.5 (15.45)		
	1PH8135						547.5 (21.56)		437.5 (17.22)		
	1PH8137/ 1PH8138						587.5 (23.13)		477.5 (18.80)		

						Shaft extension DE				
Shaft height	Type	IEC	P	S	T	**D**	DB	E	F	GA
132	1PH8131		340 (13.39)	18 (0.71)	5 (0.20)	**48 (1.89)**	M16	110 (4.33)	14 (0.55)	51.5 (2.03)
	1PH8133									
	1PH8135									
	1PH8137/ 1PH8138									

© Siemens AG 2017

Dimensional drawings

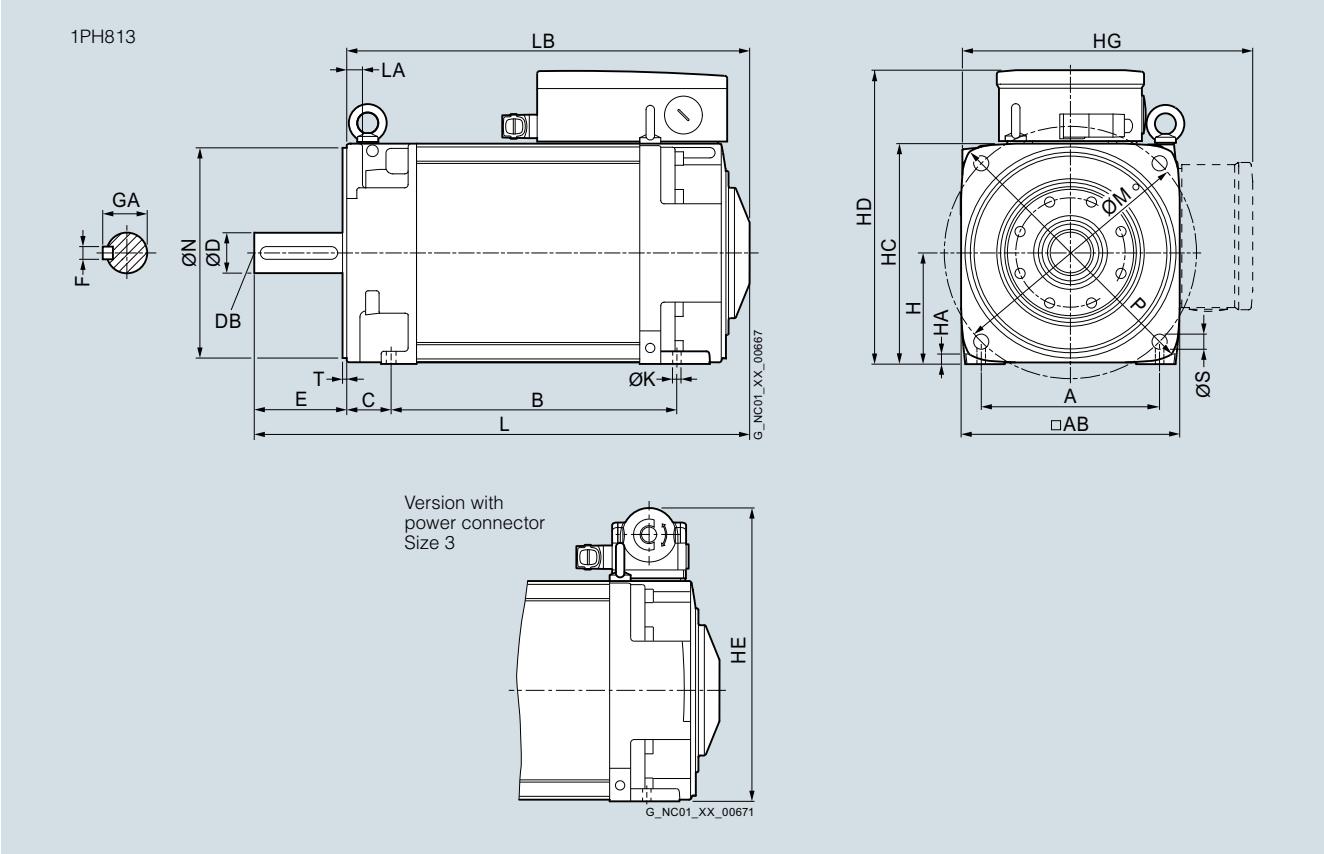

For motor		Dimensions in mm (inches)												
Shaft height	Type	IEC	A	AB	B	C	H	HA	HC	HD	HE	HG	K	L
1PH8, type of construction IM B35, water cooling														
132	1PH8131		216 (8.50)	260 (10.24)	220.5 (8.68)	53 (2.09)	132 (5.20)	15 (0.59)	262 (10.31)	347.5 (13.68)	347 (13.66)	357.5 (14.07)	12 (0.47)	457.5 (18.01)
	1PH8133				265.5 (10.45)									502.5 (19.78)
	1PH8135				310.5 (12.22)									547.5 (21.56)
	1PH8137/ 1PH8138				350.5 (13.80)									587.5 (23.13)

										Shaft extension DE				
Shaft height	Type	IEC	LA	LB	M	N	P	S	T	**D**	DB	E	F	GA
132	1PH8131		18 (0.71)	347.5 (13.68)	300 (11.81)	250 (9.84)	340 (13.39)	18 (0.71)	5 (0.20)	**48 (1.89)**	M16	110 (4.33)	14 (0.55)	51.5 (2.03)
	1PH8133			392.5 (15.45)										
	1PH8135			437.5 (17.22)										
	1PH8137/ 1PH8138			477.5 (18.80)										

© Siemens AG 2017

SIMOTICS M-1PH8 synchronous motors – SH 160 – Forced ventilation

Dimensional drawings

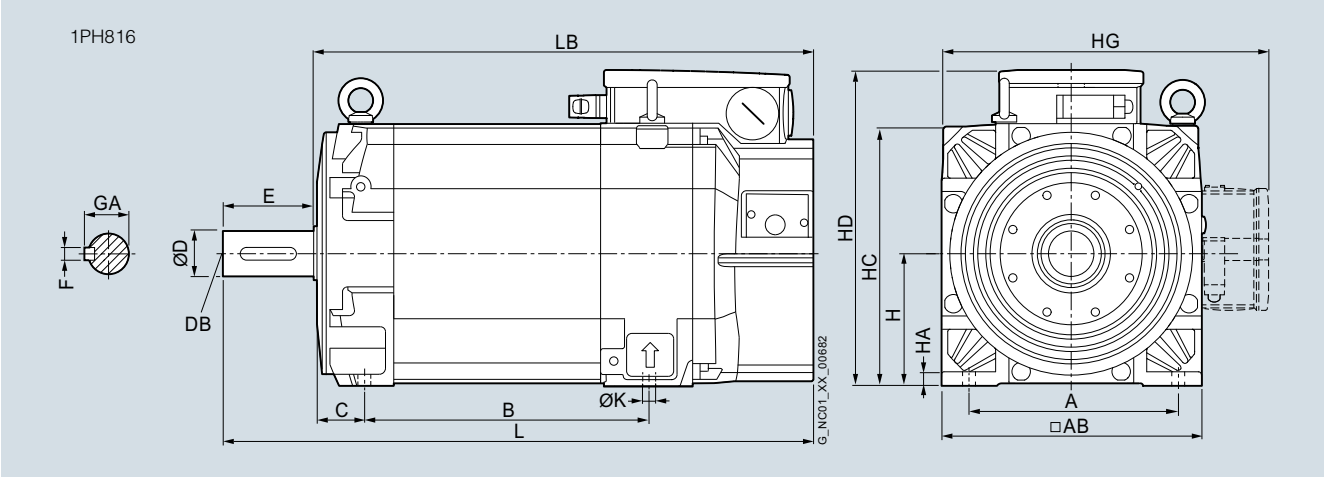

For motor		Dimensions in mm (inches)									
Shaft height	Type	IEC	A	AB	B	C	H	HA	HC	HD	HG
1PH8, type of construction IM B3, forced ventilation											
160	1PH8163		254 (10.00)	314 (12.36)	346.5 (13.64)	61 (2.40)	160 (215) (6.30)	17 (0.67)	317 (12.48)	382.5 (15.06)	412.5 (16.24)
	1PH8165				406.5 (16.00)						

						Shaft extension DE				
Shaft height	Type	IEC	K	L	LB	**D**	DB	E	F	GA
160	1PH8163		14 (0.55)	720.5 (28.37)	610.5 (24.04)	**55 (2.17)**	M20	110 (4.33)	16 (0.56) (0.63)	59 (2.32)
	1PH8165			780.5 (30.73)	670.5 (26.40)					

© Siemens AG 2017

Dimensional drawings

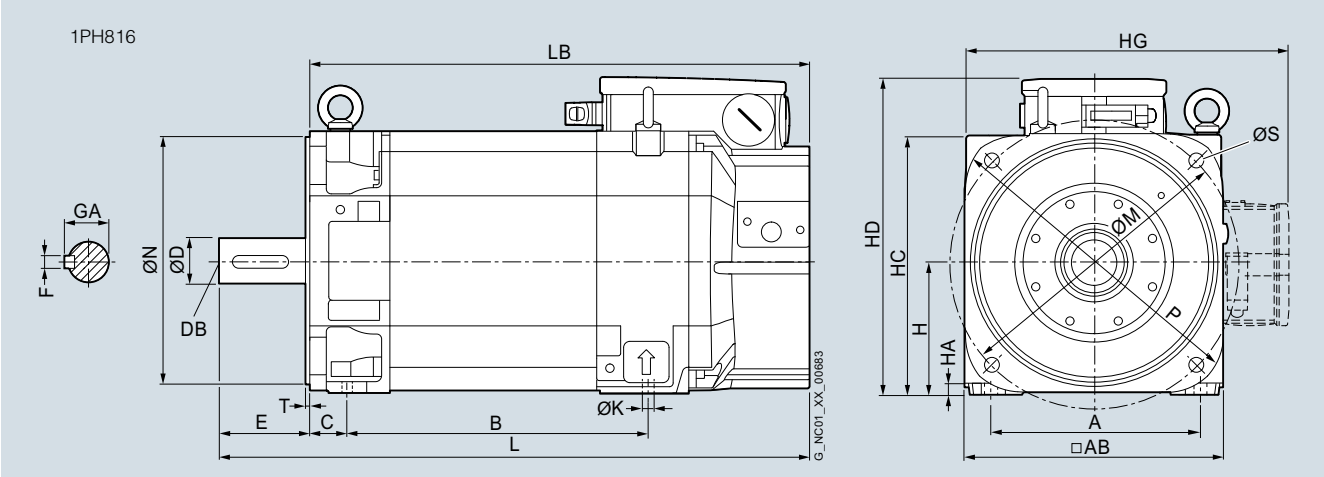

For motor		Dimensions in mm (inches)											
Shaft height	Type	IEC	A	AB	B	C	H	HA	HC	HD	HG	K	L
1PH8, type of construction IM B5/IM B35, forced ventilation													
160	1PH8163		254 (10.00)	314 (12.36)	346.5 (13.64)	61 (2.40)	160 (6.30)	17 (0.67)	317 (12.48)	382.5 (15.06)	412.5 (16.24)	14 (0.55)	720.5 (28.37)
	1PH8165				406.5 (16.00)								780.5 (30.73)

									Shaft extension DE				
Shaft height	Type	IEC	LB	M	N	P	S	T	**D**	DB	E	F	GA
160	1PH8163		610.5 (24.04)	350 (13.78)	300 (11.81)	393 (15.47)	18 (0.71)	5 (0.20)	**55 (2.17)**	M20	110 (4.33)	16 (0.63)	59 (2.32)
	1PH8165		670.5 (26.40)										

© Siemens AG 2017

SIMOTICS M-1PH8 synchronous motors – SH 160 – Forced ventilation

Dimensional drawings

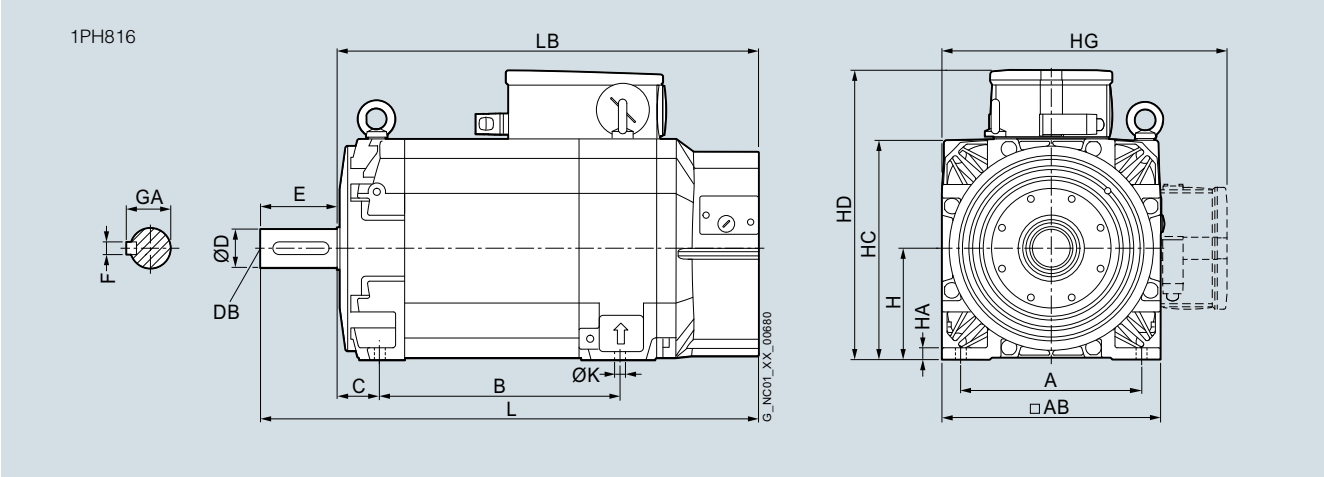

For motor		Dimensions in mm (inches)									
Shaft height	Type	IEC	A	AB	B	C	H	HA	HC	HD	HG
1PH8, type of construction IM B3, forced ventilation											
160	1PH8165		254 (10.00)	314 (12.36)	406.5 (16.00)	61 (2.40)	160 (6.30)	17 (0.67)	317 (12.48)	415.5 (16.36)	412.5 (16.24)
	1PH8167				446.5 (17.58)						

						Shaft extension DE				
Shaft height	Type	IEC	K	L	LB	**D**	DB	E	F	GA
160	1PH8165		14 (0.55)	780.5 (30.73)	670.5 (26.40)	**55 (2.17)**	M20	110 (4.33)	16 (0.63)	59 (2.32)
	1PH8167			820.5 (32.30)	710.5 (27.97)					

© Siemens AG 2017

Dimensional drawings

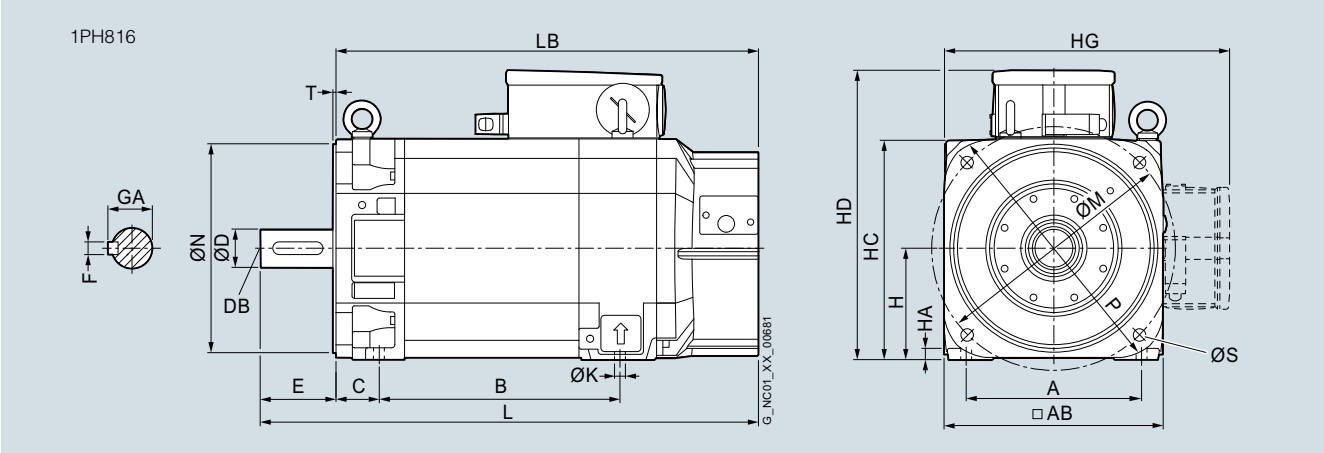

For motor		Dimensions in mm (inches)											
Shaft height	Type	IEC	A	AB	B	C	H	HA	HC	HD	HG	K	L
1PH8, type of construction IM B5/IM B35, forced ventilation													
160	1PH8165		254 (10.00)	314 (12.36)	406.5 (16.00)	61 (2.40)	160 (6.30)	17 (0.67)	317 (12.48)	415.5 (16.36)	412.5 (16.24)	14 (0.55)	780.5 (30.73)
	1PH8167				446.5 (17.58)								820.5 (32.30)

									Shaft extension DE				
Shaft height	Type	IEC	LB	M	N	P	S	T	**D**	DB	E	F	GA
160	1PH8165		670.5 (26.40)	350 (13.78)	300 (11.81)	393 (15.47)	18 (0.71)	5 (0.20)	**55 (2.17)**	M20	110 (4.33)	16 (0.63)	59 (2.32)
	1PH8167		710.5 (27.97)										

© Siemens AG 2017

SIMOTICS M-1PH8 asynchronous and synchronous motors – SH 160 – Water cooling

Dimensional drawings

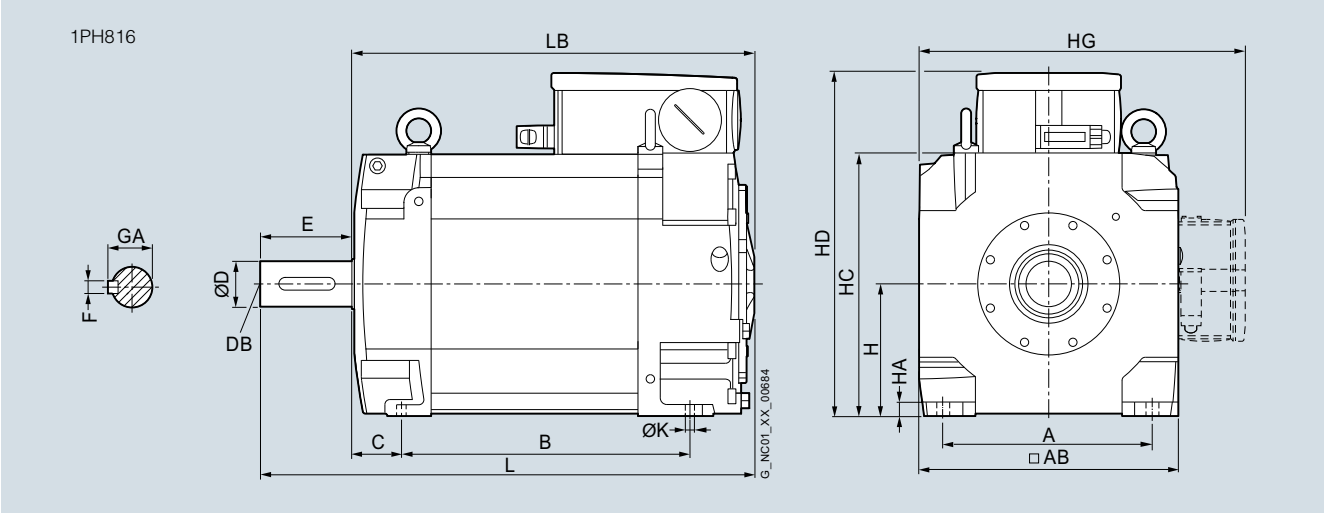

For motor		Dimensions in mm (inches)									
Shaft height	Type	IEC	A	AB	B	C	H	HA	HC	HD	HG
1PH8, type of construction IM B3, water cooling											
160	1PH8163/ 1PH8164		254 (10.00)	314 (12.36)	346.5 (13.64)	61 (2.40)	160 (6.30)	17 (0.67)	317 (12.48)	415.5 (16.36)	412.5 (16.24)
	1PH8165/ 1PH8166				406.5 (16.00)						
	1PH8168				446.5 (17.58)						

						Shaft extension DE				
Shaft height	Type	IEC	K	L	LB	**D**	DB	E	F	GA
160	1PH8163/ 1PH8164		14 (0.55)	598.5 (23.56)	488.5 (19.23)	**55 (2.17)**	M20	110 (4.33)	16 (0.63)	59 (2.32)
	1PH8165/ 1PH8166			658.5 (25.93)	548.5 (21.59)					
	1PH8168			698.5 (27.50)	588.5 (23.17)					

© Siemens AG 2017

Dimensional drawings

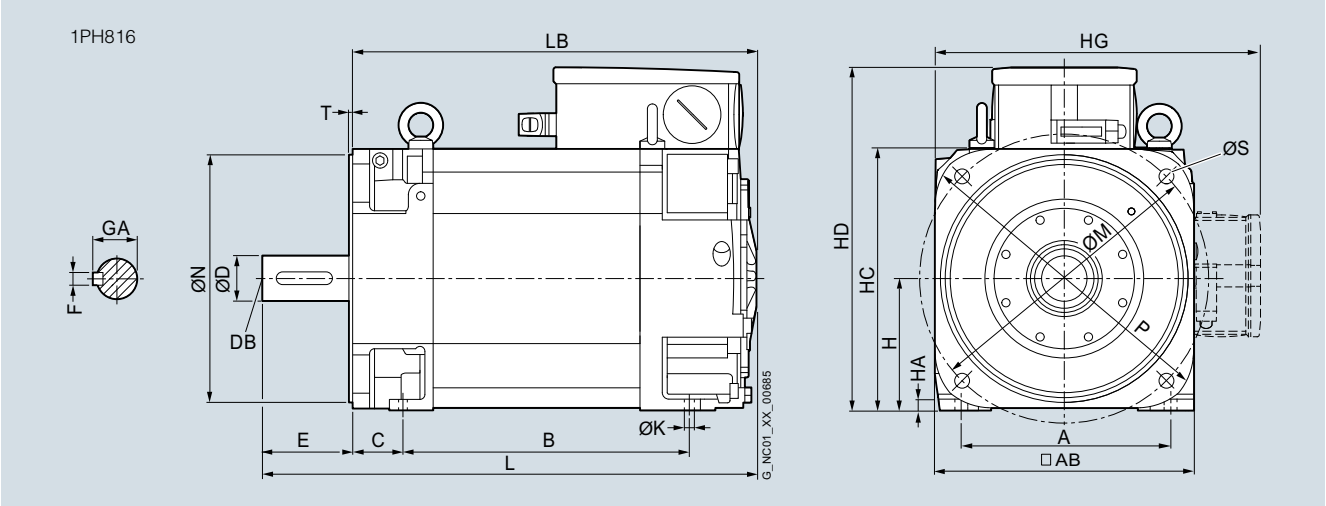

For motor		Dimensions in mm (inches)											
Shaft height	Type	IEC	A	AB	B	C	H	HA	HC	HD	HG	K	L
1PH8, type of construction IM B5/IM B35, water cooling													
160	1PH8163/ 1PH8164		254 (10.00)	314 (12.36)	346.5 (13.64)	61 (2.40)	160 (6.30)	17 (0.67)	317 (12.48)	415.5 (16.36)	412.5 (16.24)	14 (0.55)	598.5 (23.56)
	1PH8165/ 1PH8166				406.5 (16.00)								658.5 (25.93)
	1PH8168				446.5 (17.58)								698.5 (27.50)

									Shaft extension DE				
Shaft height	Type	IEC	LB	M	N	P	S	T	**D**	DB	E	F	GA
160	1PH8163/ 1PH8164		488.5 (19.23)	350 (13.78)	300 (11.81)	393 (15.47)	18 (0.71)	5 (0.20)	**55 (2.17)**	M20	110 (4.33)	16 (0.63)	59 (2.32)
	1PH8165/ 1PH8166		548.5 (21.59)										
	1PH8168		588.5 (23.17)										

© Siemens AG 2017

Dimensional drawings

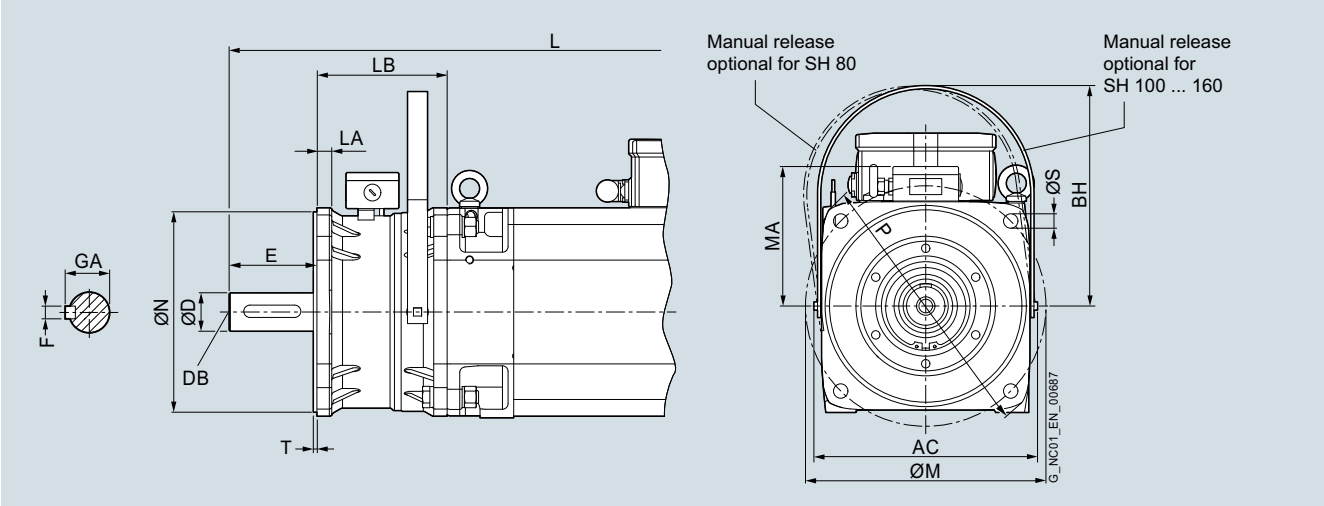

For motor		Dimensions in mm (inches)																	
															Shaft extension DE				
Shaft height	Type	IEC	AC	BH	L Forced ventilation	L Water cooling	LA	LB	M	MA	N	P	S	T	**D**	DB	E	F	GA
1PH8 shaft heights 80 to 132, types of construction IM B5 and IM B35, forced ventilation and water cooling – Brake mounting																			
80	1PH8083		164 (6.46)	162 (6.38)	586 (23.07)	506.5 (19.94)	12 (0.47)	125 (4.92)	165 (6.50)	162 (6.38)	130 (5.12)	200 (7.87)	12 (0.47)	3.5 (0.14)	**32 (1.26)**	M12	80 (3.15)	10 (0.39)	35 (1.38)
	1PH8087				636 (25.04)	556.5 (21.91)													
100	1PH8101		220.5 (8.68)	224 (8.82)	579.5 (22.81)	499.5 (19.67)	16 (0.63)	130 (5.12)	215 (8.46)	224 (8.82)	180 (7.09)	250 (9.84)	14 (0.55)	4 (0.16)	**38 (1.50)**	M12	80 (3.15)	10 (0.39)	41 (1.61)
	1PH8103				615 (24.21)	535 (21.06)													
	1PH8105				674.5 (26.56)	594.5 (23.41)													
	1PH8107				710 (27.95)	630 (24.80)													
132	1PH8131		278.5 (10.96)	269 (10.59)	711 (27.99)	619.5 (24.39)	18 (0.71)	162 (6.38)	300 (11.81)	269 (10.59)	250 (9.84)	340 (13.39)	18 (0.71)	5 (0.20)	**48 (1.89)**	M16	110 (4.33)	14 (0.55)	51.5 (2.03)
	1PH8133				756 (29.76)	664.5 (26.16)													
	1PH8135				801 (31.54)	709.5 (27.93)													
	1PH8137/ 1PH8138				841 (33.11)	749.5 (29.51)													
1PH8 shaft height 160, type of construction IM B35, forced ventilation and water cooling – Brake mounting																			
160	1PH8163/ 1PH8164		319 (12.56)	328 (12.91)	888.5 (34.98)	766.5 (30.18)	23 (0.91)	168 (6.61)	350 (13.78)	328 (12.91)	300 (11.81)	393 (15.47)	18 (0.71)	5 (0.20)	**55 (2.17)**	M20	110 (4.33)	16 (0.63)	59 (2.32)
	1PH8165/ 1PH8166				948.5 (37.34)	826.5 (32.54)													
	1PH8167/ 1PH8168				988.5 (38.92)	866.5 (34.11)													

© Siemens AG 2017

SIMOTICS M-1PH8 asynchronous and synchronous motors – SH 80 to 160 – Forced ventilation with pipe connection

Dimensional drawings

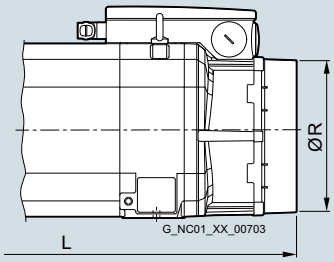

For motor		Dimensions in mm (inches)		
Shaft height	Type	IEC	L	R
1PH8 asynchronous motors shaft heights 80 and 100, forced ventilation – Pipe connection (option K80)				
80	1PH8083		503 (19.80)	143 (5.63)
	1PH8087		553 (21.77)	
100	1PH8101		496.5 (19.55)	158 (6.22)
	1PH8103		532 (20.94)	
	1PH8105		591.5 (23.29)	
	1PH8107		627 (24.68)	
1PH8 asynchronous and synchronous motors shaft heights 132 and 160, forced ventilation – Pipe connection (option K80)				
132	1PH8131		595.5 (23.44)	222 (8.74)
	1PH8133		640.5 (25.22)	
	1PH8135		685.5 (26.99)	
	1PH8137		725.5 (28.56)	
160	1PH8163		792 (31.18)	276 (10.87)
	1PH8165		852 (33.54)	
	1PH8167		892 (35.12)	

© Siemens AG 2017

SIMOTICS M-1PH8 asynchronous and synchronous motors – SH 180 – Forced ventilation

Dimensional drawings

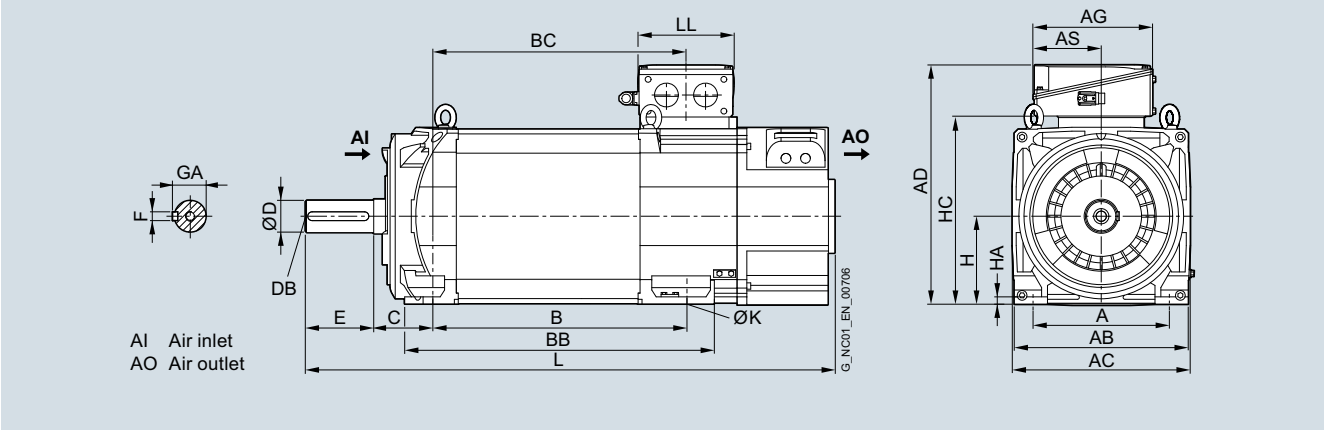

For motor		Dimensions in mm (inches)												Shaft extension DE				
Shaft height	Type	IEC	A	AB	AC	B	BB	C	H	HA	HC	K	L	**D**	DB	E	F	GA
1PH8 type of construction IM B3, forced ventilation – Direction of air flow DE → NDE																		
180	1PH8184		279 (10.98)	356 (14.02)	364 (14.33)	430 (16.93)	545 (21.46)	121 (4.76)	180 (7.09)	15 (0.59)	383 (15.08)	14.5 (0.57)	995 (39.17)	**65 (2.56)**	M20	140 (5.51)	18 (0.71)	69 (2.72)
	1PH8186					520 (20.47)	635 (25.00)						1085 (42.72)					

Terminal box		Dimensions in mm (inches)					
Shaft height	Type	IEC	AD	AG	AS	BC	LL
Terminal box type 1XB7322							
180	1PH8184		490 (19.29)	245 (9.65)	140 (5.51)	429 (16.89)	196 (7.72)
	1PH8186					519 (20.43)	
Terminal box type 1XB7422							
180	1PH8184		533 (20.98)	281 (11.06)	176 (6.93)	429 (16.89)	233 (9.17)
	1PH8186					519 (20.43)	
Terminal box type 1XB7700							
180	1PH8184		586 (23.07)	297 (11.69)	156 (6.14)	429 (16.89)	310 (12.20)
	1PH8186					519 (20.43)	

© Siemens AG 2017

Dimensional drawings

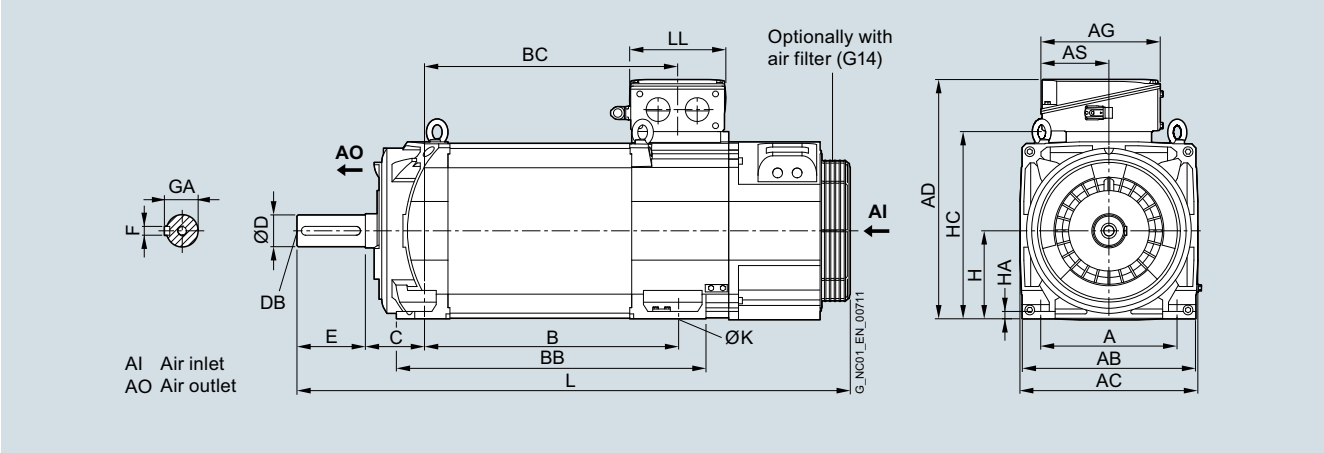

For motor		Dimensions in mm (inches)																
														Shaft extension DE				
Shaft height	Type	IEC	A	AB	AC	B	BB	C	H	HA	HC	K	L	**D**	DB	E	F	GA
1PH8 type of construction IM B3, forced ventilation – Direction of air flow NDE → DE																		
180	1PH8184		279 (10.98)	356 (14.02)	364 (14.33)	430 (16.93)	545 (21.46)	121 (4.76)	180 (7.09)	15 (0.59)	383 (15.08)	14.5 (0.57)	1047 (41.22)	**65 (2.56)**	M20	140 (5.51)	18 (0.71)	69 (2.72)
	1PH8186					520 (20.47)	635 (25.00)						1137 (44.76)					

Terminal box		Dimensions in mm (inches)					
Shaft height	Type	IEC	AD	AG	AS	BC	LL
Terminal box type 1XB7322							
180	1PH8184		490 (19.29)	245 (9.65)	140 (5.51)	429 (16.89)	196 (7.72)
	1PH8186					519 (20.43)	
Terminal box type 1XB7422							
180	1PH8184		533 (20.98)	281 (11.06)	176 (6.93)	429 (16.89)	233 (9.17)
	1PH8186					519 (20.43)	
Terminal box type 1XB7700							
180	1PH8184		586 (23.07)	297 (11.69)	156 (6.14)	429 (16.89)	310 (12.20)
	1PH8186					519 (20.43)	

© Siemens AG 2017

SIMOTICS M-1PH8 asynchronous and synchronous motors – SH 180 – Forced ventilation

Dimensional drawings

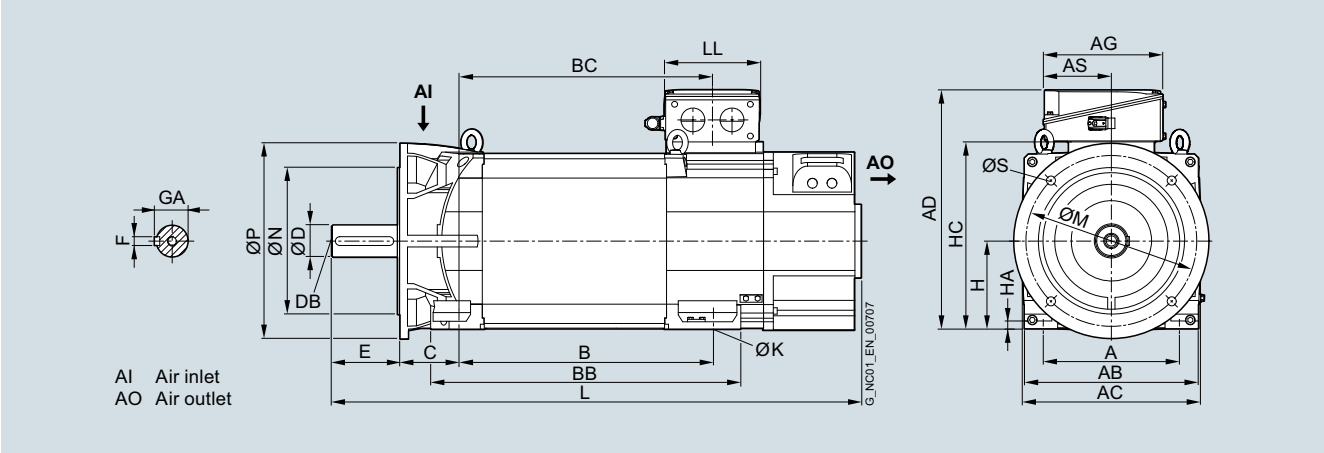

For motor		Dimensions in mm (inches)																				
																		Shaft extension DE				
Shaft height	Type	IEC	A	AB	AC	B	BB	C	H	HA	HC	K	L	M	N	P	S	**D**	DB	E	F	GA
1PH8 type of construction IM B35, forced ventilation – Direction of air flow DE → NDE, A400 flange (option K90)																						
180	1PH8184		279 (10.98)	356 (14.02)	364 (14.33)	430 (16.93)	545 (21.46)	121 (4.76)	180 (7.09)	15 (0.59)	383 (15.08)	14.5 (0.57)	995 (39.17)	350 (13.78)	300 (11.81)	400 (15.75)	18,5 (0.73)	**65 (2.56)**	M20	140 (5.51)	18 (0.71)	69 (2.72)
	1PH8186					520 (20.47)	635 (25.00)						1085 (42.72)									

Terminal box		Dimensions in mm (inches)					
Shaft height	Type	IEC	AD	AG	AS	BC	LL
Terminal box type 1XB7322							
180	1PH8184		490 (19.29)	245 (9.65)	140 (5.51)	429 (16.89)	196 (7.72)
	1PH8186					519 (20.43)	
Terminal box type 1XB7422							
180	1PH8184		533 (20.98)	281 (11.06)	176 (6.93)	429 (16.89)	233 (9.17)
	1PH8186					519 (20.43)	
Terminal box type 1XB7700							
180	1PH8184		586 (23.07)	297 (11.69)	156 (6.14)	429 (16.89)	310 (12.20)
	1PH8186					519 (20.43)	

© Siemens AG 2017

Dimensional drawings

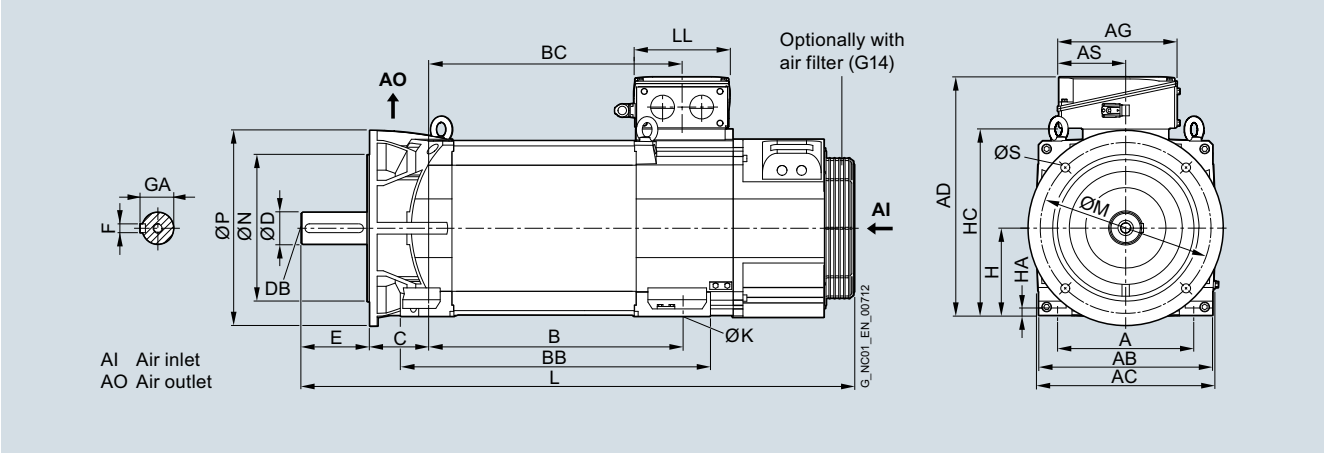

For motor		Dimensions in mm (inches)																				
																		Shaft extension DE				
Shaft height	Type	IEC	A	AB	AC	B	BB	C	H	HA	HC	K	L	M	N	P	S	**D**	DB	E	F	GA
1PH8 type of construction IM B35, forced ventilation – Direction of air flow NDE → DE, A400 flange (option K90)																						
180	1PH8184		279 (10.98)	356 (14.02)	364 (14.33)	430 (16.93)	545 (21.46)	121 (4.76)	180 (7.09)	15 (0.59)	383 (15.08)	14.5 (0.57)	1047 (41.22)	350 (13.78)	300 (11.81)	400 (15.75)	18,5 (0.73)	**65 (2.56)**	M20	140 (5.51)	18 (0.71)	69 (2.72)
	1PH8186					520 (20.47)	635 (25.00)						1137 (44.76)									

Terminal box		Dimensions in mm (inches)					
Shaft height	Type	IEC	AD	AG	AS	BC	LL
Terminal box type 1XB7322							
180	1PH8184		490 (19.29)	245 (9.65)	140 (5.51)	429 (16.89)	196 (7.72)
	1PH8186					519 (20.43)	
Terminal box type 1XB7422							
180	1PH8184		533 (20.98)	281 (11.06)	176 (6.93)	429 (16.89)	233 (9.17)
	1PH8186					519 (20.43)	
Terminal box type 1XB7700							
180	1PH8184		586 (23.07)	297 (11.69)	156 (6.14)	429 (16.89)	310 (12.20)
	1PH8186					519 (20.43)	

© Siemens AG 2017

SIMOTICS M-1PH8 asynchronous and synchronous motors – SH 180 – Forced ventilation

Dimensional drawings

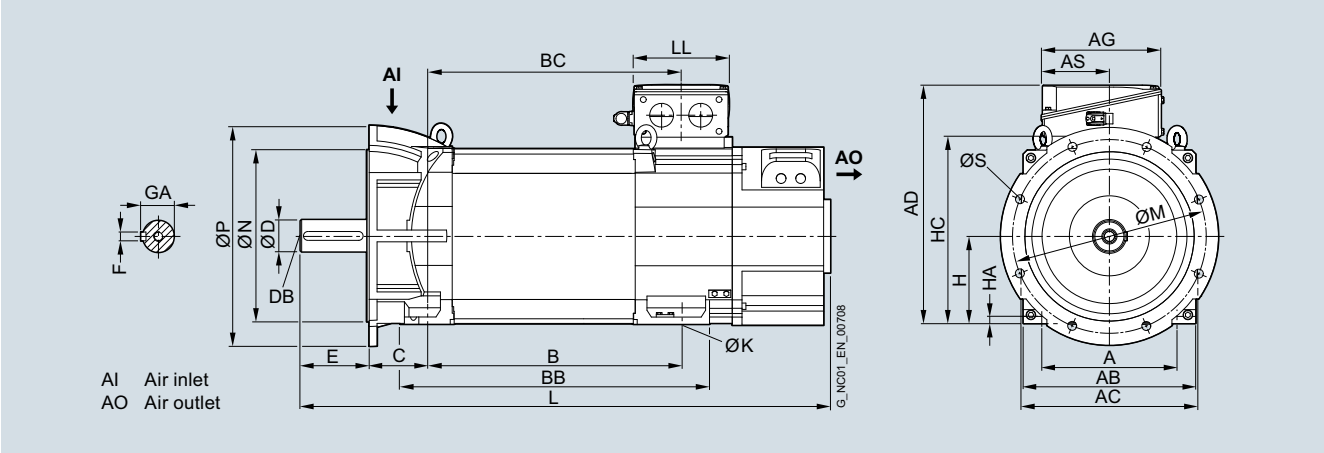

For motor		Dimensions in mm (inches)																				
																		Shaft extension DE				
Shaft height	Type	IEC	A	AB	AC	B	BB	C	H	HA	HC	K	L	M	N	P	S	**D**	DB	E	F	GA
1PH8 type of construction IM B35, forced ventilation – Direction of air flow DE → NDE, A450 flange																						
180	1PH8184		279 (10.98)	356 (14.02)	364 (14.33)	430 (16.93)	545 (21.46)	121 (4.76)	180 (7.09)	15 (0.59)	383 (15.08)	14.5 (0.57)	995 (39.17)	400 (15.75)	350 (13.78)	450 (17.72)	18,5 (0.73)	**65 (2.56)**	M20	140 (5.51)	18 (0.71)	69 (2.72)
	1PH8186					520 (20.47)	635 (25.00)						1085 (42.72)									

Terminal box		Dimensions in mm (inches)					
Shaft height	Type	IEC	AD	AG	AS	BC	LL
Terminal box type 1XB7322							
180	1PH8184		490 (19.29)	245 (9.65)	140 (5.51)	429 (16.89)	196 (7.72)
	1PH8186					519 (20.43)	
Terminal box type 1XB7422							
180	1PH8184		533 (20.98)	281 (11.06)	176 (6.93)	429 (16.89)	233 (9.17)
	1PH8186					519 (20.43)	
Terminal box type 1XB7700							
180	1PH8184		586 (23.07)	297 (11.69)	156 (6.14)	429 (16.89)	310 (12.20)
	1PH8186					519 (20.43)	

© Siemens AG 2017

Dimensional drawings

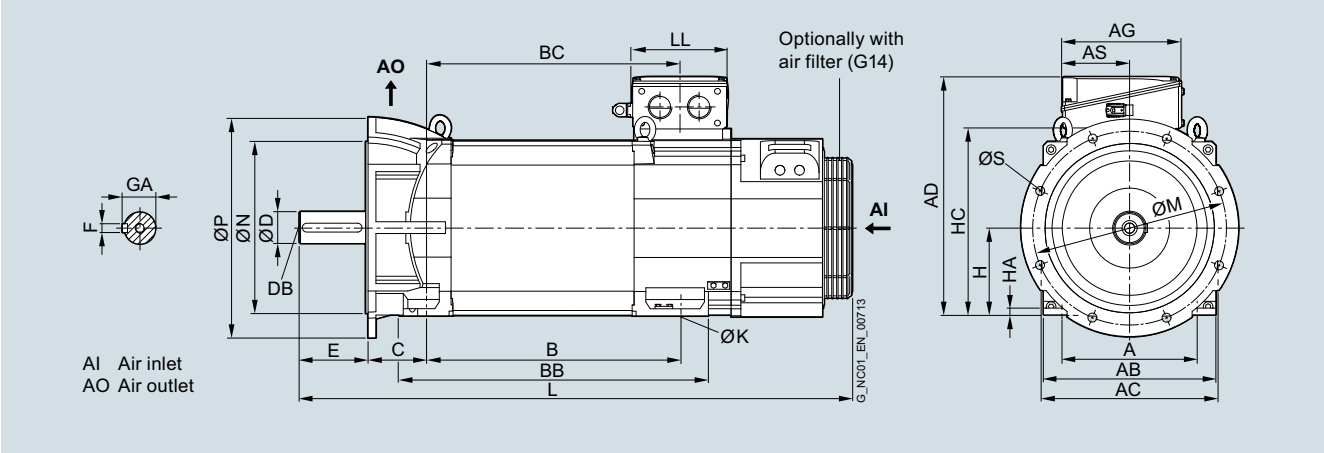

For motor		Dimensions in mm (inches)																				
																		Shaft extension DE				
Shaft height	Type	IEC	A	AB	AC	B	BB	C	H	HA	HC	K	L	M	N	P	S	**D**	DB	E	F	GA
1PH8 type of construction IM B35, forced ventilation – Direction of air flow NDE → DE, A450 flange																						
180	1PH8184		279 (10.98)	356 (14.02)	364 (14.33)	430 (16.93)	545 (21.46)	121 (4.76)	180 (7.09)	15 (0.59)	383 (15.08)	14.5 (0.57)	1047 (41.22)	400 (15.75)	350 (13.78)	450 (17.72)	18,5 (0.73)	**65 (2.56)**	M20	140 (5.51)	18 (0.71)	69 (2.72)
	1PH8186					520 (20.47)	635 (25.00)						1137 (44.76)									

Terminal box		Dimensions in mm (inches)					
Shaft height	Type	IEC	AD	AG	AS	BC	LL
Terminal box type 1XB7322							
180	1PH8184		490 (19.29)	245 (9.65)	140 (5.51)	429 (16.89)	196 (7.72)
	1PH8186					519 (20.43)	
Terminal box type 1XB7422							
180	1PH8184		533 (20.98)	281 (11.06)	176 (6.93)	429 (16.89)	233 (9.17)
	1PH8186					519 (20.43)	
Terminal box type 1XB7700							
180	1PH8184		586 (23.07)	297 (11.69)	156 (6.14)	429 (16.89)	310 (12.20)
	1PH8186					519 (20.43)	

© Siemens AG 2017

SIMOTICS M-1PH8 asynchronous and synchronous motors – SH 180 – Water cooling

Dimensional drawings

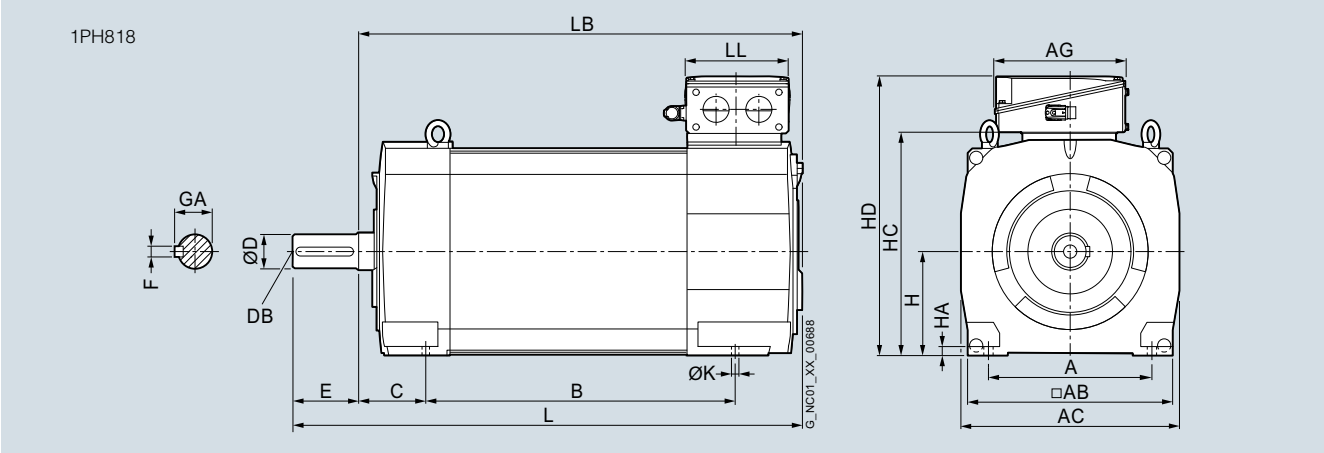

For motor		Dimensions in mm (inches)											
Shaft height	Type	IEC	A	AB	AC	B	C	H	HA	HC	K	L	LB
1PH8, types of construction IM B3/IM V5, water cooling													
180	1PH8184		279 (10.98)	356 (14.02)	384 (15.12)	430 (16.93)	121 (4.76)	180 (7.09)	15 (0.59)	372 (14.65)	14.5 (0.57)	810 (31.89)	670 (26.38)
	1PH8186					520 (20.47)						900 (35.43)	760 (29.92)

			Shaft extension DE					Terminal box type								
								1XB7322			1XB7422			1XB7700		
Shaft height	Type	IEC	**D**	DB	E	F	GA	AG	HD	LL	AG	HD	LL	AG	HD	LL
180	1PH8184		**65**	M20	140 (5.51)	18 (0.71)	69 (2.72)	245 (9.65)	490 (19.29)	196 (7.72)	281 (11.06)	533 (20.98)	233 (9.17)	297 (11.69)	586 (23.07)	310 (12.20)
	1PH8186															

© Siemens AG 2017

Dimensional drawings

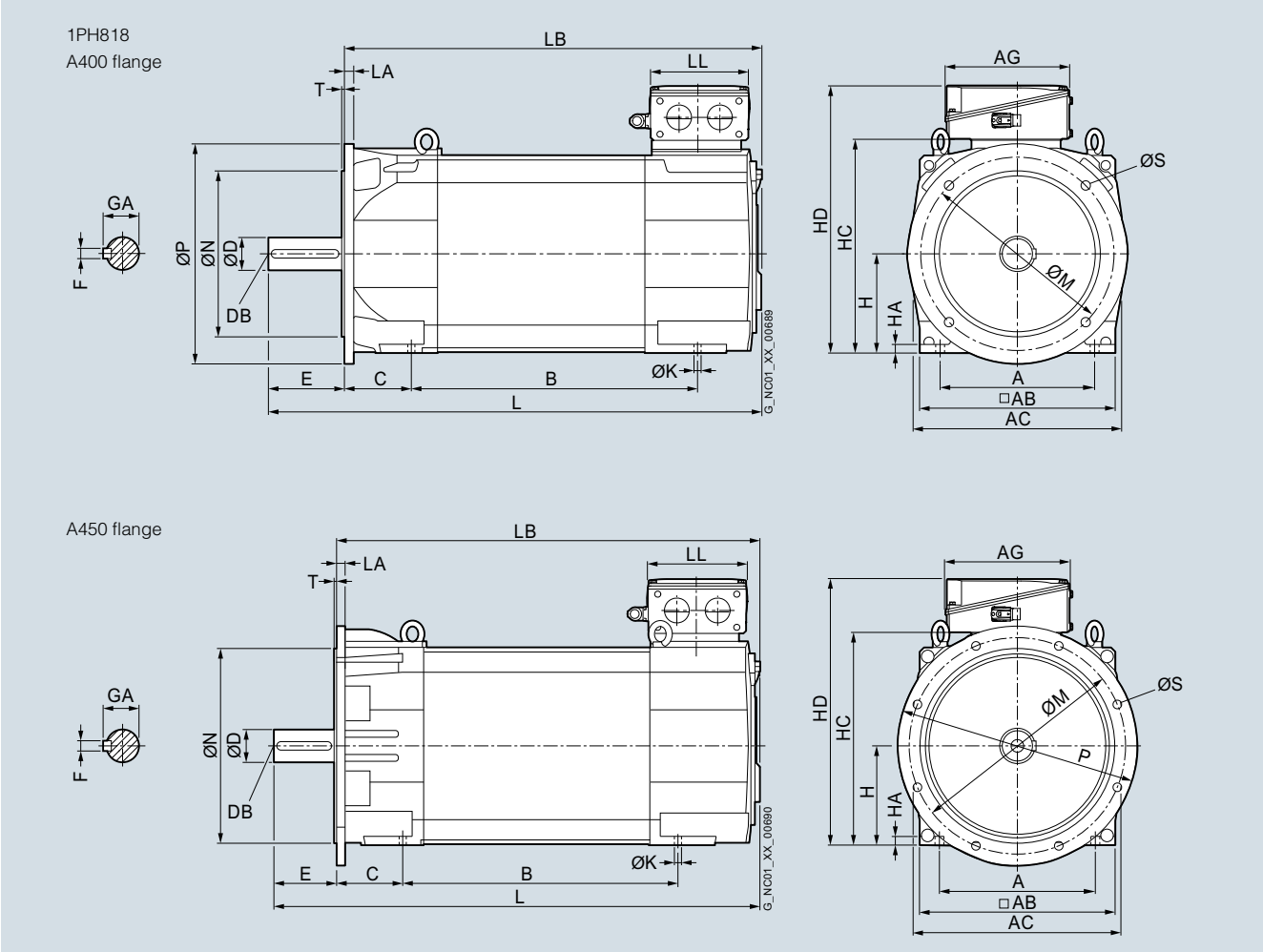

For motor		Dimensions in mm (inches)																
															A400	A450	A400	A450
Shaft height	Type	IEC	A	AB	AC	B	C	H	HA	HC	K	L	LA	LB	M		N	
1PH8, types of construction IM B5/IM B35/IM V15, water cooling																		
180	1PH8184		279 (10.98)	356 (14.02)	384 (15.12)	430 (16.93)	121 (4.76)	180 (7.09)	15 (0.59)	372 (14.65)	14.5 (0.57)	810 (31.89)	16 (0.63)	670 (26.38)	350 (13.78)	400 (15.75)	300 (11.81)	350 (13.78)
	1PH8186					520 (20.47)						900 (35.43)		760 (29.92)				

							Shaft extension DE				Terminal box types 1XB7322, 1XB7422, 1XB7700 Dimensions as for types of construction IM B3/IM V5
			A400	A450							
Shaft height	Type	IEC	P		S	T	**D**	DB	E	F	GA
180	1PH8184		400 (15.75)	450 (17.72)	18,5 (0.73)	5 (0.20)	**65**	M20	140 (5.51)	18 (0.71)	69 (2.72)
	1PH8186										

© Siemens AG 2017

SIMOTICS M-1PH8 asynchronous and synchronous motors – SH 225 – Forced ventilation

Dimensional drawings

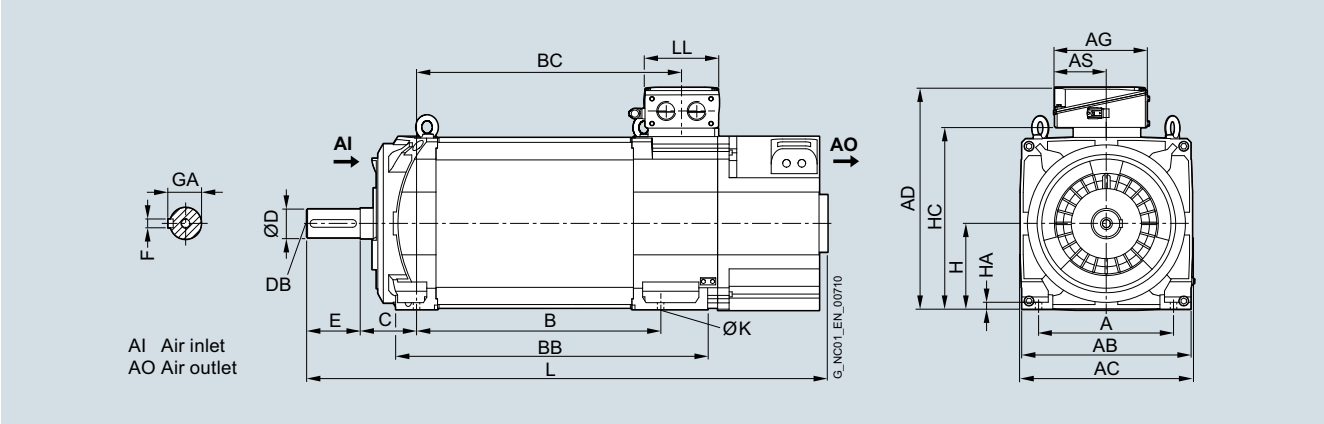

For motor		Dimensions in mm (inches)																
													Shaft extension DE					
Shaft height	Type	IEC	A	AB	AC	B	BB	C	H	HA	HC	K	L	**D**	DB	E	F	GA
1PH8 type of construction IM B3, forced ventilation – Direction of air flow DE → NDE																		
225	1PH8224		356 (14.02)	446 (17.56)	454 (17.87)	445 (17.52)	625 (24.61)	149 (5.87)	225 (8.86)	18 (0.71)	475 (18.70)	18,5 (0.73)	1171 (46.10)	**75 (2.95)**	M20	140 (5.51)	20 (0.79)	79.5 (3.13)
	1PH8226					545 (21.46)	725 (28.54)						1271 (40.04)					
	1PH8228					635 (25.00)	815 (32.09)						1361 (53.58)					

Terminal box		Dimensions in mm (inches)					
Shaft height	Type	IEC	AD	AG	AS	BC	LL
Terminal box type 1XB7322							
225	1PH8224		582 (22.91)	245 (9.65)	140 (5.51)	481 (18.94)	196 (7.72)
	1PH8226					581 (22.87)	
	1PH8228					671 (26.42)	
Terminal box type 1XB7422							
225	1PH8224		625 (24.61)	281 (11.06)	176 (6.93)	481 (18.94)	233 (9.17)
	1PH8226					581 (22.87)	
	1PH8228					671 (26.42)	
Terminal box type 1XB7700							
225	1PH8224		678 (26.69)	297 (11.69)	156 (6.14)	481 (18.94)	310 (12.20)
	1PH8226					581 (22.87)	
	1PH8228					671 (26.42)	

© Siemens AG 2017

Dimensional drawings

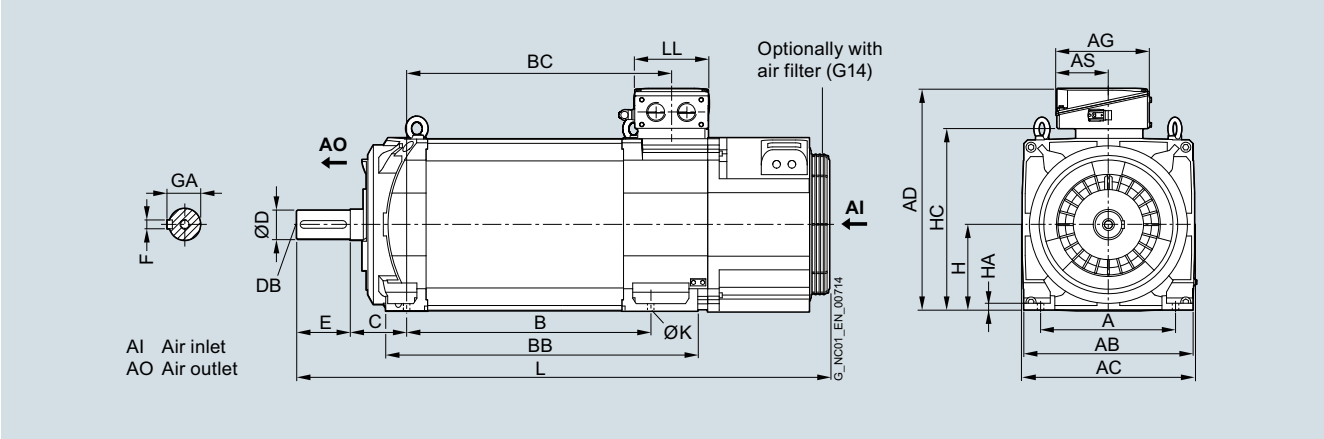

For motor		Dimensions in mm (inches)																
														Shaft extension DE				
Shaft height	Type	IEC	A	AB	AC	B	BB	C	H	HA	HC	K	L	**D**	DB	E	F	GA
1PH8 type of construction IM B3, forced ventilation – Direction of air flow NDE → DE																		
225	1PH8224		356 (14.02)	446 (17.56)	454 (17.87)	445 (17.52)	625 (24.61)	149 (5.87)	225 (8.86)	18 (0.71)	475 (18.70)	18,5 (0.73)	1206 (47.48)	**75 (2.95)**	M20	140 (5.51)	20 (0.79)	79.5 (3.13)
	1PH8226					545 (21.46)	725 (28.54)						1306 (51.42)					
	1PH8228					635 (25.00)	815 (32.09)						1396 (54.96)					

Terminal box		Dimensions in mm (inches)					
Shaft height	Type	IEC	AD	AG	AS	BC	LL
Terminal box type 1XB7322							
225	1PH8224		582 (22.91)	245 (9.65)	140 (5.51)	481 (18.94)	196 (7.72)
	1PH8226					581 (22.87)	
	1PH8228					671 (26.42)	
Terminal box type 1XB7422							
225	1PH8224		625 (24.61)	281 (11.06)	176 (6.93)	481 (18.94)	233 (9.17)
	1PH8226					581 (22.87)	
	1PH8228					671 (26.42)	
Terminal box type 1XB7700							
225	1PH8224		678 (26.69)	297 (11.69)	156 (6.14)	481 (18.94)	310 (12.20)
	1PH8226					581 (22.87)	
	1PH8228					671 (26.42)	

© Siemens AG 2017

SIMOTICS M-1PH8 asynchronous and synchronous motors – SH 225 – Forced ventilation

Dimensional drawings

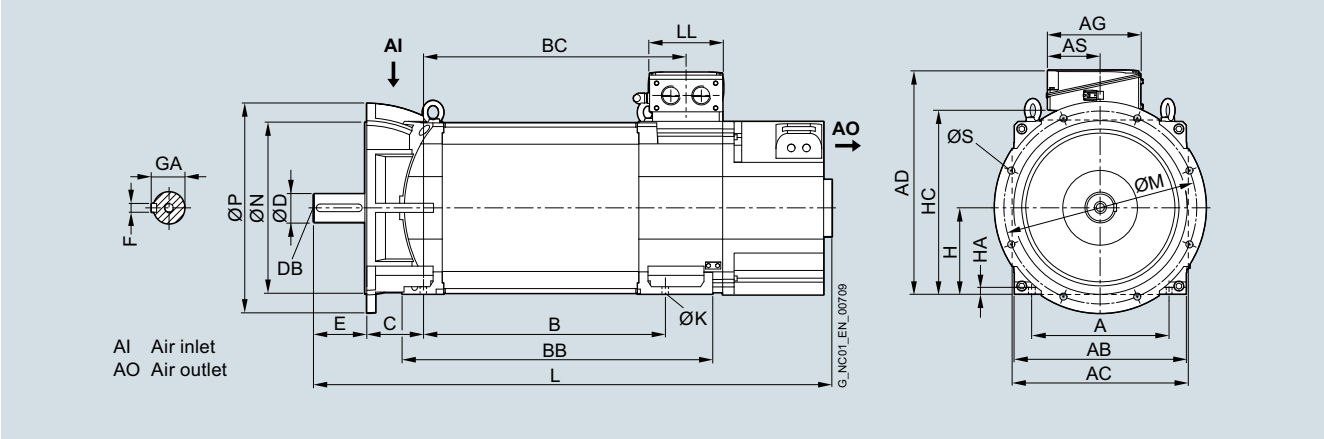

For motor		Dimensions in mm (inches)																					
																			Shaft extension DE				
Shaft height	Type	IEC	A	AB	AC	B	BB	C	H	HA	HC	K	L	M	N	P	S	**D**	DB	E	F	GA
1PH8 type of construction IM B35, forced ventilation – Direction of air flow DE → NDE, A550 flange																							
225	1PH8224		356 (14.02)	446 (17.56)	454 (17.87)	445 (17.52)	625 (24.61)	149 (5.87)	225 (8.86)	18 (0.71)	475 (18.70)	18,5 (0.73)	1171 (46.10)	500 (19.69)	450 (17.72)	550 (21.65)	18,5 (0.73)	**75 (2.95)**	M20	140 (5.51)	20 (0.79)	79.5 (3.13)
	1PH8226					545 (21.46)	725 (28.54)						1271 (50.04)									
	1PH8228					635 (25.00)	815 (32.09)						1361 (53.58)									

Terminal box		Dimensions in mm (inches)					
Shaft height	Type	IEC	AD	AG	AS	BC	LL
Terminal box type 1XB7322							
225	1PH8224		582 (22.91)	245 (9.65)	140 (5.51)	481 (18.94)	196 (7.72)
	1PH8226					581 (22.87)	
	1PH8228					671 (26.42)	
Terminal box type 1XB7422							
225	1PH8224		625 (24.61)	281 (11.06)	176 (6.93)	481 (18.94)	233 (9.17)
	1PH8226					581 (22.87)	
	1PH8228					671 (26.42)	
Terminal box type 1XB7700							
225	1PH8224		678 (26.69)	297 (11.69)	156 (6.14)	481 (18.94)	310 (12.20)
	1PH8226					581 (22.87)	
	1PH8228					671 (26.42)	

© Siemens AG 2017

SIMOTICS M-1PH8 asynchronous and synchronous motors – SH 225 – Forced ventilation

Dimensional drawings

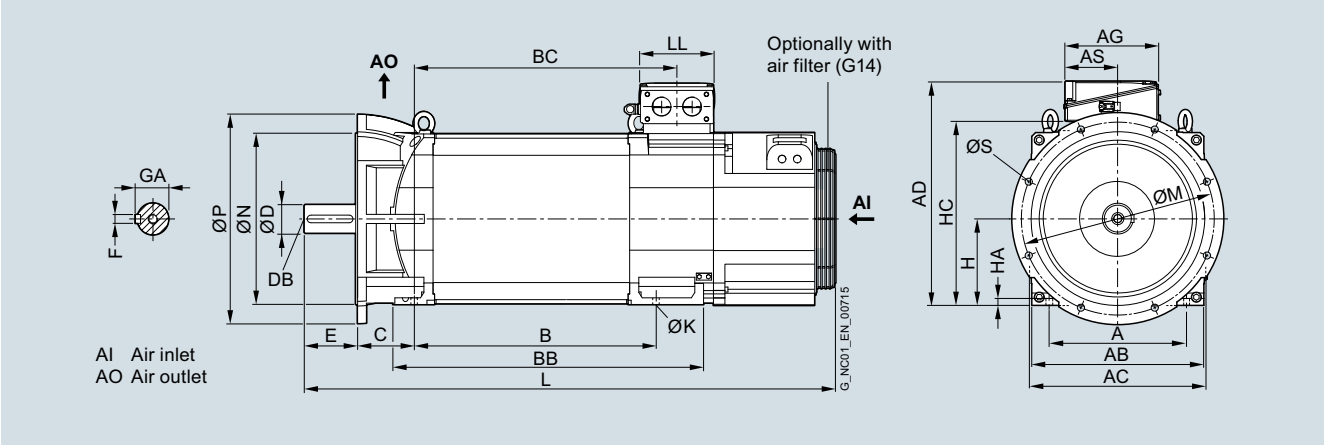

For motor		Dimensions in mm (inches)																				
																		Shaft extension DE				
Shaft height	Type	IEC	A	AB	AC	B	BB	C	H	HA	HC	K	L	M	N	P	S	**D**	DB	E	F	GA
1PH8 type of construction IM B35, forced ventilation – Direction of air flow NDE → DE, A550 flange																						
225	1PH8224		356 (14.02)	446 (17.56)	454 (17.87)	445 (17.52)	625 (24.61)	149 (5.87)	225 (8.86)	18 (0.71)	475 (18.70)	18,5 (0.73)	1206 (47.48)	500 (19.69)	450 (17.72)	550 (21.65)	18,5 (0.73)	**75 (2.95)**	M20	140 (5.51)	20 (0.79)	79.5 (3.13)
	1PH8226					545 (21.46)	725 (28.54)						1306 (51.42)									
	1PH8228					635 (25.00)	815 (32.09)						1396 (54.96)									

Terminal box		Dimensions in mm (inches)					
Shaft height	Type	IEC	AD	AG	AS	BC	LL
Terminal box type 1XB7322							
225	1PH8224		582 (22.91)	245 (9.65)	140 (5.51)	481 (18.94)	196 (7.72)
	1PH8226					581 (22.87)	
	1PH8228					671 (26.42)	
Terminal box type 1XB7422							
225	1PH8224		625 (24.61)	281 (11.06)	176 (6.93)	481 (18.94)	233 (9.17)
	1PH8226					581 (22.87)	
	1PH8228					671 (26.42)	
Terminal box type 1XB7700							
225	1PH8224		678 (26.69)	297 (11.69)	156 (6.14)	481 (18.94)	310 (12.20)
	1PH8226					581 (22.87)	
	1PH8228					671 (26.42)	

© Siemens AG 2017

SIMOTICS M-1PH8 asynchronous and synchronous motors – SH 225 – Water cooling

Dimensional drawings

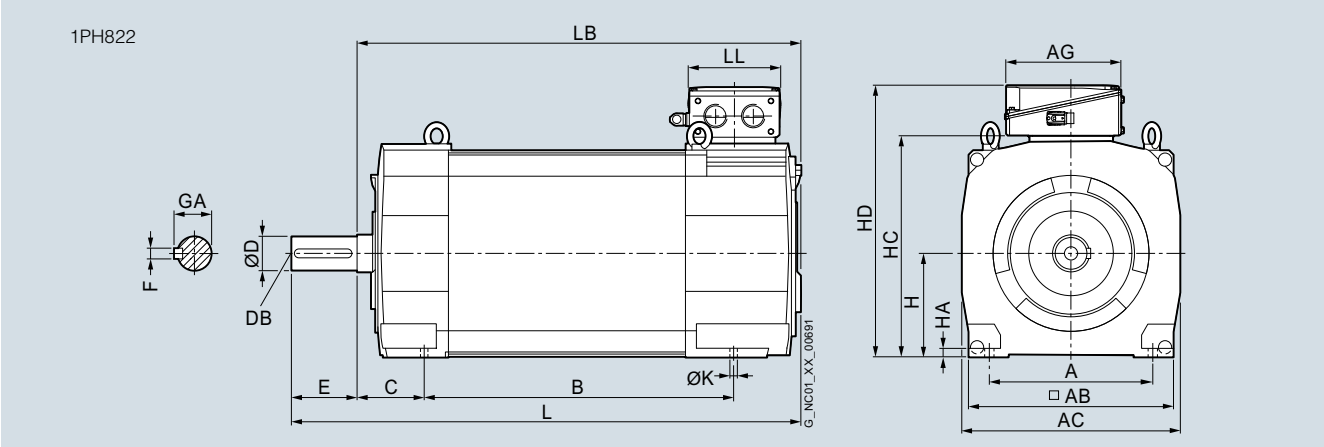

For motor		Dimensions in mm (inches)											
Shaft height	Type	IEC	A	AB	AC	B	C	H	HA	HC	K	L	LB
1PH8, types of construction IM B3/IM V5, water cooling													
225	1PH8224		356 (14.02)	446 (17.56)	474 (18.66)	445 (17.52)	149 (5.87)	225 (8.86)	18 (0.71)	462 (18.19)	18,5 (0.73)	915 (36.02)	775 (30.51)
	1PH8226					545 (21.46)						1015 (39.96)	875 (34.45)
	1PH8228					635 (25.0)						1105 (43.50)	965 (37.99)

9

			Shaft extension DE					Terminal box type								
								1XB7322			1XB7422			1XB7700		
Shaft height	Type	IEC	**D**	DB	E	F	GA	AG	HD	LL	AG	HD	LL	AG	HD	LL
225	1PH8224		**75**	M20	140 (5.51)	20 (0.79)	79.5 (3.13)	245 (9.65)	585 (23.03)	196 (7.72)	281 (11.06)	628 (24.72)	233 (9.17)	297 (11.69)	677 (26.65)	310 (12.20)
	1PH8226															
	1PH8228															

© Siemens AG 2017

Dimensional drawings

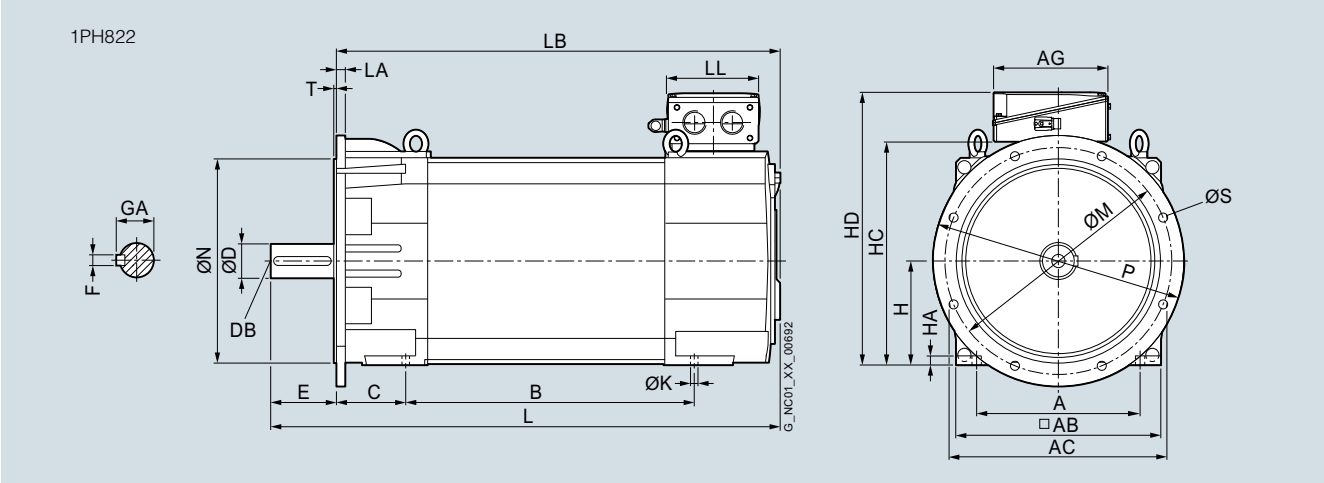

For motor		Dimensions in mm (inches)																	
Shaft height	Type	IEC	A	AB	AC	B	C	H	HA	HC	K	L	LA	LB	M	N	P	S	T
1PH8, types of construction IM B5/IM B35/IM V15, water cooling, A550 flange																			
225	1PH8224		356 (14.02)	446 (17.56)	474 (18.66)	445 (17.52)	149 (5.87)	225 (8.86)	18 (0.71)	462 (18.19)	18,5 (0.73)	910 (35.83)	20 (0.79)	770 (30.31)	500 (19.69)	450 (17.72)	550 (21.65)	18,5 (0.73)	5 (0.20)
	1PH8226					545 (21.46)						1012 (39.84)		872 (34.33)					
	1PH8228					635 (25.00)						1102 (43.39)		962 (37.87)					

			Shaft extension DE					Terminal box types 1XB7322, 1XB7422, 1XB7700 Dimensions as for types of construction IM B3/IM V5
Shaft height	Type	IEC	**D**	DB	E	F	GA	
225	1PH8224		**75**	M20	140 (5.51)	20 (0.79)	79.5 (3.13)	
	1PH8226							
	1PH8228							

© Siemens AG 2017

SIMOTICS M-1PH8 asynchronous and synchronous motors with holding brake – SH 180 and 225

Dimensional drawings

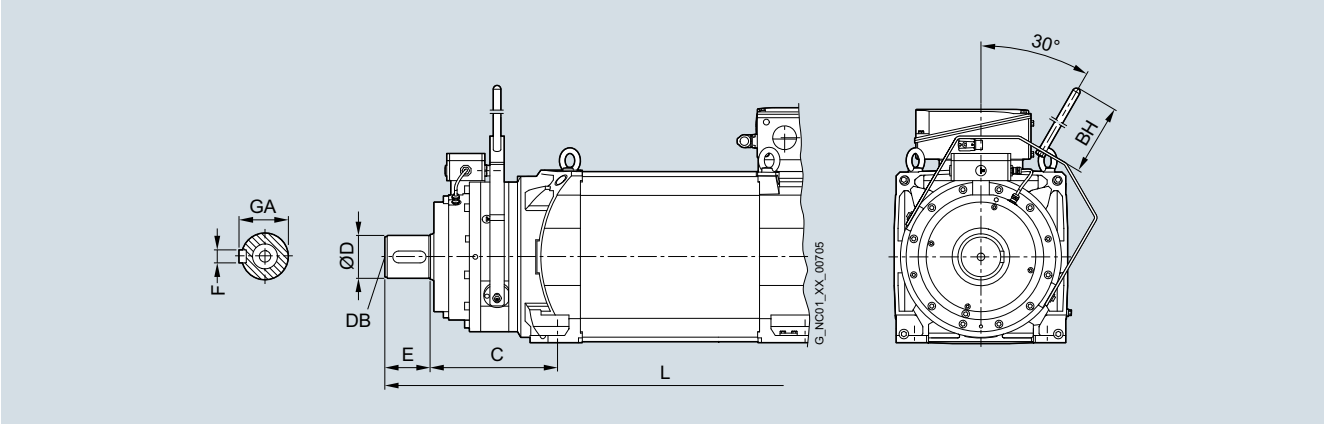

For motor		Dimensions in mm (inches)										
					Forced ventilation		Water cooling	Shaft extension DE				
Shaft height	Type	IEC	BH	C	L DE → NDE	L NDE→ DE	L	**D**	DB	E	F	GA
1PH8 type of construction IM B3, forced ventilation – Directions of air flow DE → NDE and NDE → DE, water cooling; brake mounting (option U63)												
180	1PH8184		252 (9.92)	268 (10.55)	1096 (43.15)	1148 (45.20)	911 (35.87)	**90** **(3.54)**	M20	95 (3.74)	25 (0.98)	95 (3.74)
	1PH8186				1186 (46.69)	1238 (48.74)	1001 (39.41)					
225	1PH8224		493 (19.41)		1295 (50.98)	1330 (52.36)	1040 (40.94)	95 (3.74)	M20	105 (4.13)	25 (0.98)	100 (3.94)
	1PH8226				1395 (54.92)	1430 (56.30)	1140 (44.88)					
	1PH8228				1495 (58.86)	1520 (59.84)	1230 (48.43)					

© Siemens AG 2017

SIMOTICS M-1PH8 asynchronous and synchronous motors – SH 180 and 225 – Forced ventilation with pipe connection

Dimensional drawings

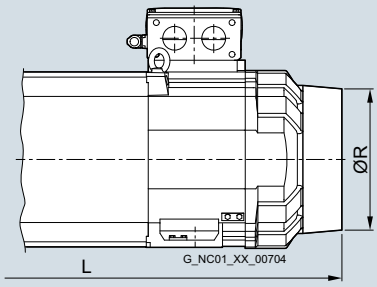

For motor		Dimensions in mm (inches)	
Shaft height	Type	IEC L	R
1PH8 forced ventilation – Pipe connection (option K80)			
180	1PH8184	993 (39.09)	300 (11.81)
	1PH8186	1083 (42.64)	
225	1PH8224	1084 (42.68)	350 (13.78)
	1PH8226	1184 (46.61)	
	1PH8228	1274 (50.16)	

© Siemens AG 2017

SIMOTICS M-1PH8 asynchronous motors – SH 280 – Forced ventilation

Dimensional drawings

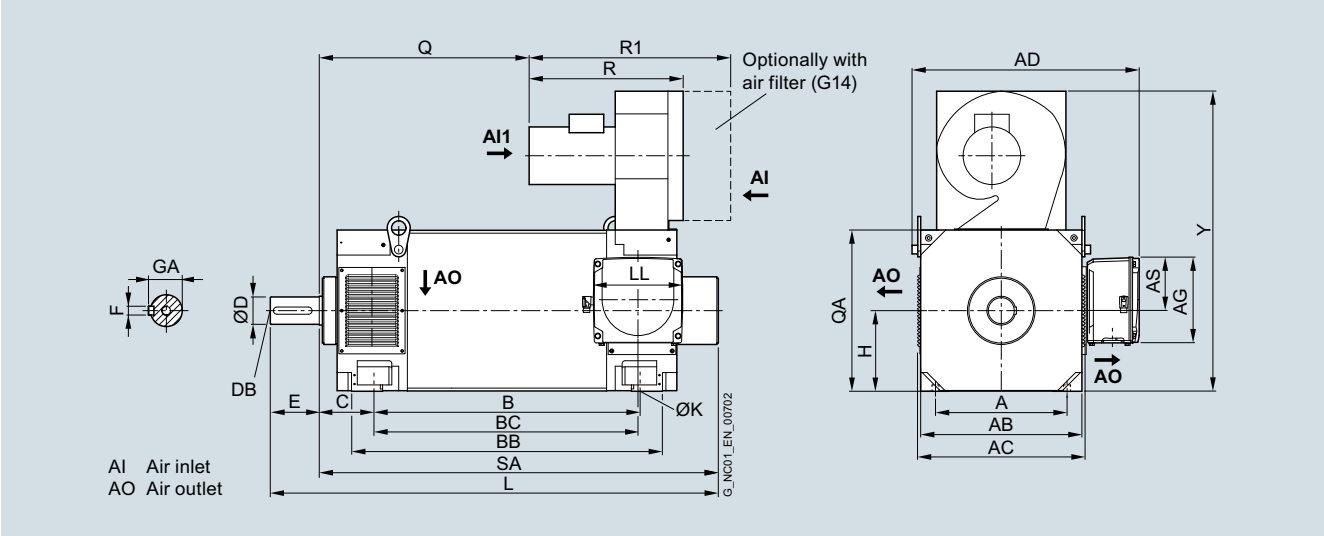

For motor		Dimensions in mm (inches)									
Shaft height	Type	IEC A	AB	AC	B	BB	C	D	DB	E	F
1PH8 type of construction IM B3, forced ventilation – Direction of air flow NDE → DE											
280	1PH8284	457 (17.99)	560 (22.05)	582 (22.91)	684 (26.93)	840 (33.07)	190 (7.48)	95 (3.74)	M24	170 (6.69)	25 (0.98)
	1PH8286				794 (31.26)	950 (37.40)					
	1PH8288				924 (36.38)	1080 (42.52)					
		GA	H	K	L	Q	QA	R	R1	SA	Y
	1PH8284	100 (3.94)	280 (11.02)	24 (0.94)	1316 (51.81)	489 (19.25)	560 (22.05)	546 (21.50)	700 (27.56)	1146 (45.12)	1042 (41.02)
	1PH8286				1426 (56.14)	599 (23.58)				1256 (49.45)	
	1PH8288				1556 (61.26)	729 (28.70)				1386 (54.57)	

Terminal box		Dimensions in mm (inches)				
Shaft height	Type	IEC AD	AG	AS	BC	LL
Terminal box type 1XB7700						
280	1PH8284	789 (31.06)	297 (11.69)	186 (7.32)	677 (26.65)	310 (12.20)
	1PH8286				787 (30.98)	
	1PH8288				917 (36.10)	
Terminal box type 1XB7712						
280	1PH8284	836 (32.91)	371 (14.61)	201 (7.91)	691 (27.20)	370 (14.57)
	1PH8286				801 (31.54)	
	1PH8288				931 (36.65)	

© Siemens AG 2017

Dimensional drawings

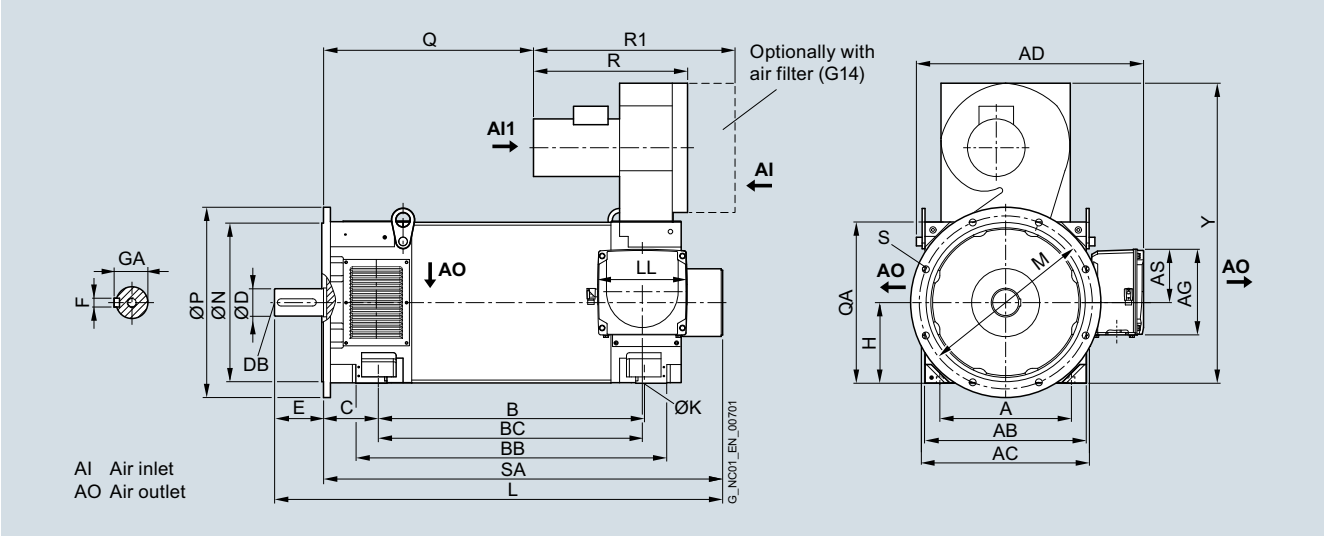

For motor		Dimensions in mm (inches)												
Shaft height	Type	IEC	A	AB	AC	B	BB	C	D	DB	E	F	GA	H
1PH8 type of construction IM B35, forced ventilation – Direction of air flow NDE → DE, A660 flange														
280	1PH8284		457 (17.99)	560 (22.05)	582 (22.91)	684 (26.93)	840 (33.07)	190 (7.48)	95 (3.74)	M24	170 (6.69)	25 (0.98)	100 (3.94)	280 (11.02)
	1PH8286					794 (31.26)	950 (37.40)							
	1PH8288					924 (36.38)	1080 (42.52)							
			K	L	M	N	P	Q	QA	R	R1	S	SA	Y
	1PH8284		24 (0.94)	1316 (51.81)	600 (23.62)	550 (21.65)	660 (25.98)	489 (19.25)	560 (22.05)	546 (21.50)	700 (27.56)	24 (0.94)	1146 (45.12)	1042 (41.02)
	1PH8286			1426 (56.14)				599 (23.58)					1256 (49.45)	
	1PH8288			1556 (61.26)				729 (28.70)					1386 (54.57)	

Terminal box		Dimensions in mm (inches)					
Shaft height	Type	IEC	AD	AG	AS	BC	LL
Terminal box type 1XB7700							
280	1PH8284		789 (31.06)	297 (11.69)	186 (7.32)	677 (26.65)	310 (12.20)
	1PH8286					787 (30.98)	
	1PH8288					917 (36.10)	
Terminal box type 1XB7712							
280	1PH8284		836 (32.91)	371 (14.61)	201 (7.91)	691 (27.20)	370 (14.57)
	1PH8286					801 (31.54)	
	1PH8288					931 (36.65)	

© Siemens AG 2017

SIMOTICS M-1PH8 asynchronous motors – SH 280 – Water cooling

Dimensional drawings

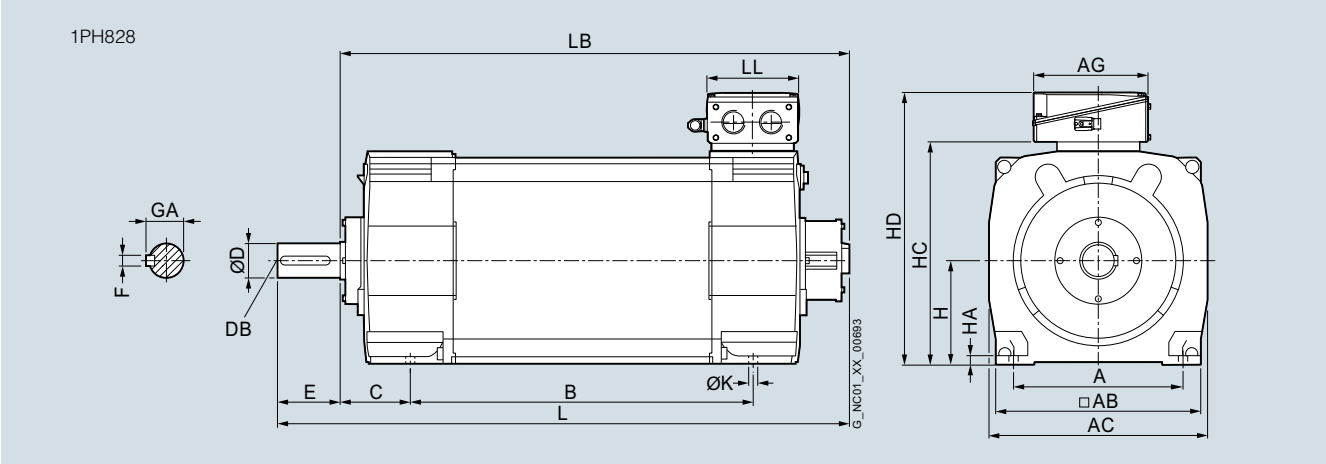

For motor		Dimensions in mm (inches)																
													Shaft extension DE					
Shaft height	Type	IEC	A	AB	AC	B	C	H	HA	HC	K	LB	**D**	DB	E	F	GA	L
1PH8, types of construction IM B3/IM V5, water cooling																		
280	1PH8284		457 (17.99)	556 (21.89)	588 (23.15)	684 (26.93)	190 (7.48)	280 (11.02)	21 (0.83)	574 (22.60)	24 (0.94)	1134 (44.65)	**95**	M24	170 (6.69)	25 0.98)	100 (3.94)	1304 (51.34)
	1PH8286					794 (31.26)						1244 (48.98)						1414 (55.67)
	1PH8288					924 (36.38)						1374 (54.09)						1544 (60.79)

			Terminal box type													
			1XB7322			1XB7422			1XB7700			1XB7712		
Shaft height	Type	IEC	AG	HD	LL	AG	HD	LL	AG	HD	LL	AG	HD	LL
280	1PH8284		245 (9.65)	674 (26.54)	196 (7.72)	281 (11.06)	717 (28.23)	233 (9.17)	297 (11.69)	751 (29.57)	310 (12.20)	371 (14.61)	813 (32.01)	370 (14.57)
	1PH8286													
	1PH8288													

9

© Siemens AG 2017

Dimensional drawings

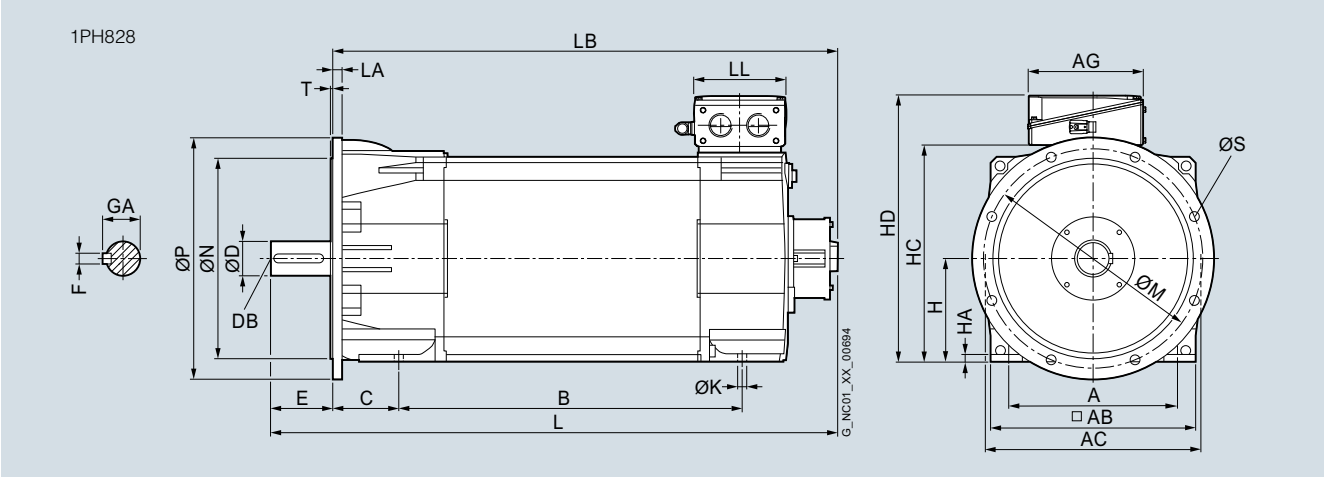

For motor		Dimensions in mm (inches)															
Shaft height	Type	IEC	A	AB	AC	B	C	H	HA	HC	K	L	LA	LB	M	N	P
1PH8, types of construction IM B5/IM B35/IM V15 D660, water cooling																	
280	1PH8284		457 (17.99)	556 (21.89)	588 (23.15)	684 (26.93)	190 (7.48)	280 (11.02)	21 (0.83)	574 (22.60)	24 (0.94)	1304 (51.34)	24 (0.94)	1134 (44.65)	600 (23.62)	550 (21.65)	660 (25.98)
	1PH8286					794 (31.26)						1414 (55.67)		1244 (48.98)			
	1PH8288					924 (36.38)						1544 (60.79)		1374 (54.09)			

			Shaft extension DE							Terminal box types 1XB77322, 1XB7422, 1XB7700, 1XB7712 Dimensions as for types of construction IM B3/IM V5
Shaft height	Type	IEC	S	T	**D**	DB	E	F	GA	
280	1PH8284		24 (0.94)	6 (0.24)	**95**	M24	170 (6.69)	25 (0.98)	100 (3.94)	
	1PH8286									
	1PH8288									

© Siemens AG 2017

Dimensional drawings

For motor Type	Dimensions in mm (inches) Total length L	Total outer diameter D	Outer stator diameter D_A	Inner rotor diameter d_i
1FE1 High Speed series				
1FE1051-4....-6BA.	130 (5.12)	120 (4.72)	106 (4.17)	46 (1.81)
1FE1052-4....-6BA.	180 (7.09)			
1FE1053-4....-6BA.	230 (9.06)			
1FE1072-4W...-6BA.	185 (7.28)	155 (6.10)	135 (5.31)	58 (2.28)
1FE1073-4W...-6BA.	235 (9.25)			
1FE1074-4W...-6BA.	285 (11.22)			
1FE1075-4W...-6BA.	335 (13.19)	155 (6.10)	135 (5.31)	58 (2.28)
1FE1082-4W...-6BA.	190 (7.48)	180 (7.09)	160 (6.30)	68 (2.68)
1FE1083-4W...-6BA.	240 (9.45)			
1FE1084-4W...-6BA.	290 (11.42)			
1FE1085-4W...-6BA.	340 (13.39)			
1FE1092-4W...-6BR.	200 (7.87)	205 (8.07)	180 (7.09)	80 (3.15)
1FE1093-4W...-6BA.	250 (9.84)			72 (2.83)
1FE1093-4W...-6BR.	250 (9.84)			80 (3.15)
1FE1094-4W...-6BA.	300 (11.81)			72 (2.83)
1FE1094-4W...-6BR.	300 (11.81)			80 (3.15)
1FE1095-4W...-6BA.	350 (13.78)			72 (2.83)
1FE1095-4W...-6BR.	350 (13.78)			80 (3.15)
1FE1096-4W...-6BA.	400 (15.75)			72 (2.83)
1FE1096-4W...-6BR.	400 (15.75)			80 (3.15)
1FE1103-4W...-6BA.	265 (10.43)	230 (9.06)	200 (7.87)	96 (3.78)
1FE1104-4W...-6BA.	315 (12.40)			
1FE1105-4W...-6BA.	365 (14.37)			
1FE1106-4W...-6BA.	415 (16.34)			
1FE1124-4W...-6BA.	315 (12.40)	270 (10.63)	240 (9.45)	110 (4.33)
1FE1125-4W...-6BA.	365 (14.37)			
1FE1126-4W...-6BA.	415 (16.34)			

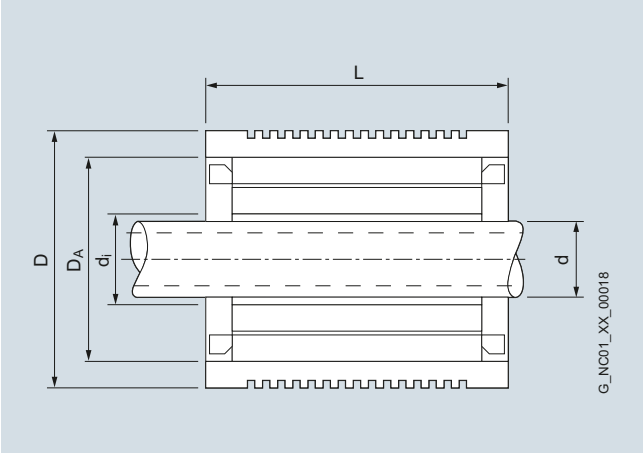

For motor Type	Dimensions in mm (inches) Total length L	Total outer diameter D	Outer stator diameter D_A	Inner rotor diameter d_i -..A.	Inner rotor diameter with sleeve d -..B.	d -..C.	d -..D.	d -..E.
1FE1 High Torque series								
1FE1041-6W...-6BA.	107 (4.21)	95 (3.74)	85 (3.35)	44 (1.73)	–	–	–	–
1FE1042-6W...-6BA.	157 (6.18)	95 (3.74)	85 (3.35)	44 (1.73)	–	–	–	–
1FE1051-6W...-6B..	170 (6.69)	115 (4.53)	103.5 (4.07)	42 (1.65)	–	33 (1.30)	–	–
1FE1052-6W...-6B..	220 (8.66)	115 (4.53)	103.5 (4.07)	42 (1.65)	–	33 (1.30)	–	–
1FE1054-6W...-6BA.	320 (12.60)	115 (4.53)	103.5 (4.07)	42 (1.65)	–	–	–	–
1FE1061-6W...-6B..	130 (5.12)	130 (5.12)	118 (4.65)	58 (2.28)	48 (1.89)	–	–	–
1FE1062-6W...-6BA.	180 (7.09)	130 (5.12)	118 (4.65)	58 (2.28)	–	–	–	–
1FE1064-6W...-6BA.	280 (11.02)	130 (5.12)	118 (4.65)	58 (2.28)	–	–	–	–
1FE1082-6W...-6B..	195 (7.68)	190 (7.48)	170 (6.69)	93 (3.66)	67 (2.64)	74 (2.91)	80 (23.15)	–
1FE1083-6W...-6B..	245 (9.65)	190 (7.48)	170 (6.69)	93 (3.66)	67 (2.64)	74 (2.91)	–	–
1FE1084-6W...-6B..	295 (11.61)	190 (7.48)	170 (6.69)	93 (3.66)	67 (2.64)	74 (2.91)	–	–
1FE1091-6W...-6B..	150 (5.91)	205 (8.07)	180 (7.09)	92 (3.62)	67 (2.64)	80 (3.15)	–	–
1FE1092-6W...-6B..	200 (7.87)	205 (8.07)	180 (7.09)	92 (3.62)	67 (2.64)	80 (3.15)	–	–
1FE1093-6W...-6B..	250 (9.84)	205 (8.07)	180 (7.09)	92 (3.62)	67 (2.64)	80 (3.15)	–	–
1FE1113-6W...-6B..	260 (10.24)	250 (9.84)	220 (8.66)	120 (4.72)	–	102 (4.02)	80 (23.15)	105.2 (4.14)
1FE1114-6W...-6B..	310 (12.20)	250 (9.84)	220 (8.66)	120 (4.72)	82 (3.23)	102 (4.02)	–	–
1FE1115-6W...-6B..	360 (14.17)	250 (9.84)	220 (8.66)	120 (4.72)	–	102 (4.02)	–	–
1FE1116-6W...-6B..	410 (16.14)	250 (9.84)	220 (8.66)	120 (4.72)	82 (3.23)	102 (4.02)	–	–
1FE1143-8W...-6BA.	290 (11.42)	310 (12.20)	280 (11.02)	166.7 (6.56)	–	–	–	–
1FE1144-8W...-6B..	340 (13.39)	310 (12.20)	280 (11.02)	166.7 (6.56)	–	150.3 (5.92)	–	–
1FE1145-8W...-6B..	390 (15.35)	310 (12.20)	280 (11.02)	–	–	150.3 (5.92)	140.3 (5.52)	125 (4.92)
1FE1147-8W...-6B..	490 (19.29)	310 (12.20)	280 (11.02)	–	–	150.3 (5.92)	140.3 (5.52)	–

© Siemens AG 2017

Dimensional drawings

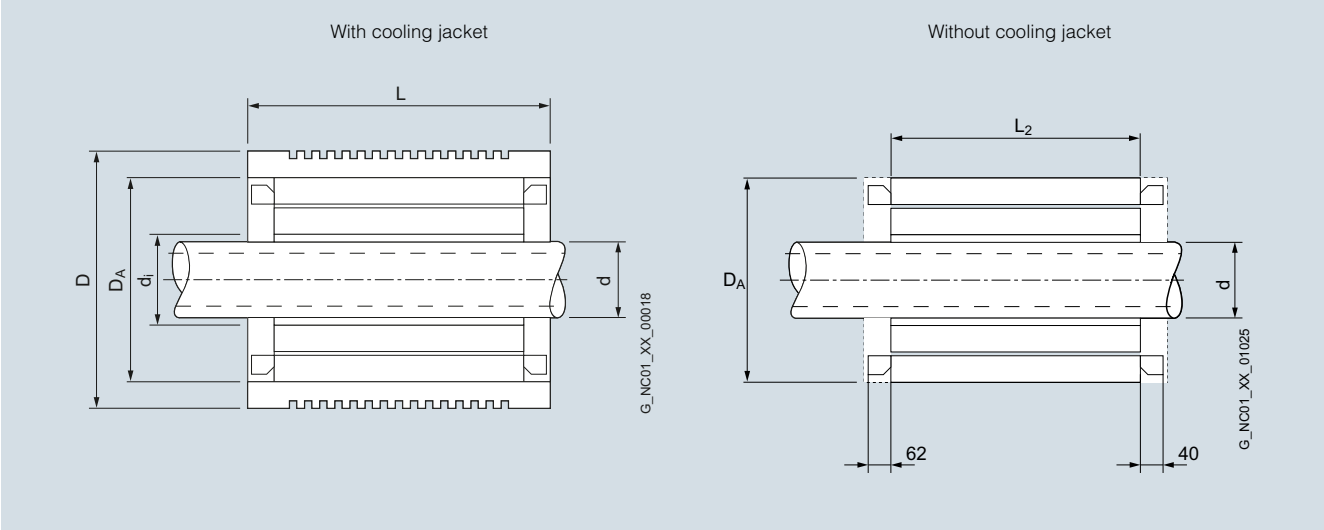

For motor	Dimensions in mm (inches)				
	Total length	Length	Total outer diameter	Outer stator diameter	Inner rotor diameter
Type	L	L_2	D	D_A	d
1FE2 High Torque series					
1FE2182-8...	320 (12.60)	200 (7.87)	400 (15.75)	359 (14.13)	200 (7.78)
1FE2183-8...	370 (14.57)	250 (9.54)			
1FE2184-8...	420 (16.54)	300 (11.81)			
1FE2185-8...	470 (18.50)	350 (13.78)			
1FE2186-8...	520 (20.47)	400 (15.75)			
1FE2187-8...	570 (22.44)	450 (17.72)			

© Siemens AG 2017

Notes

© Siemens AG 2017

10/2 Overview

SIMOTICS L linear motors for SINAMICS S120
10/4 SIMOTICS L-1FN3 linear motors
10/6 Version for peak load – Water cooling
10/10 Version for continuous load – Water cooling
10/14 Optional components
10/16 Hall-effect sensor box
10/17 Linear measuring systems
10/17 Liquid cooling

SIMOTICS T torque motors for SINAMICS S120
10/18 SIMOTICS T-1FW6 built-in torque motors
10/22 Natural cooling
10/24 Water cooling
10/35 Accessories
10/36 SIMOTICS T-1FW3 complete torque motors
10/38 Water cooling
10/48 Article No. supplements for shaft design
10/51 Options/accessories

10/52 Dimensional drawings
10/52 SIMOTICS L-1FN3 linear motors
10/54 SIMOTICS T-1FW6 built-in torque motors
10/57 SIMOTICS T-1FW3 complete torque motors

Chap. 8 **Technical information on three-phase motors**

Chap. 13 **Drive Technology Configurator**
Product selection tool
www.siemens.com/dt-configurator

Chap. 13 **SIZER for Siemens Drives**
Engineering tool
www.siemens.com/sizer

Chap. 13 **CAD CREATOR**
Dimensional drawing and 2D/3D CAD generator
www.siemens.com/cadcreator

© Siemens AG 2017

Motor type	Features	Degree of protection	Cooling method
SIMOTICS L-1FN3 linear motors	Synchronous linear motor Permanent-magnet excited	IP65	Water cooling

Motor type	Features	Degree of protection	Cooling method
SIMOTICS T-1FW6 built-in torque motors	Synchronous motor Permanent-magnet excited Hollow shaft Individual components	IP23 [1]	Natural cooling Water cooling

Motor type	Features	Degree of protection	Cooling method
SIMOTICS T-1FW3 complete torque motors 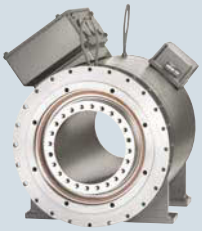	Synchronous motor Permanent-magnet excited Hollow shaft Plug-on shaft Solid shaft	 IP54 IP55 IP55	Water cooling

SIMOTICS L and SIMOTICS T linear and torque motors

The areas of application for the SIMOTICS L1FN3/T-1FW6/T-1FW3 motors are extremely diverse.

On machine tools, they are designated and used as feed motors.

On production machines e.g. printing, packaging, and textile machines, they are designated as synchronous servomotors.

Core types can be supplied for certain motor types. These core types can be express delivered as replacement motors in the event of plant outages and offer the advantage of a quicker spare parts supply. For this reason, core types should be used for configuration wherever possible.

The selection and ordering data for the SINAMICS S120 Motor Modules are based on the booksize format by way of example. Other formats are also possible. The SIZER for Siemens Drives engineering tool is available for detailed configuration.

[1] The final degree of protection (minimum degree of protection is IP54) for the installed motor is determined by the machine manufacturer.

© Siemens AG 2017

Primary section width mm	Feedrate force F_{rated} N (lb_f)	Velocity v_{max} at F_{rated}	Selection and ordering data Page
without precision cooling 67/96/126/141/188/248/342	Peak load: 200 (45) … 8100 (1821)	105 ... 836 m/min (345 ... 2743 ft/min)	**10/6**
with precision cooling 76/105/135/150/197/257/351	Continuous load: 150 (33.7) … 10375 (2332)	129 ... 435 m/min (423 ... 1427 ft/min)	**10/10**

Outer diameter mm	Rated torque M_{rated} Nm (lb_f-ft)	Rated speed n_{rated}	Selection and ordering data Page
159/184	9.91 (7) … 38.9 (29)	400 ... 600 rpm	**10/22**
159/184/230/310/385/440/502/576/730	22 (16) … 5760 (4249)	38 … 940 rpm	**10/24**

Shaft height mm	Rated power P_{rated} for duty type S1 kW (hp)	Rated torque M_{rated}	Selection and ordering data Page
SH 150/SH 200/SH 280	2.8 (3.75) … 435 (583)	95 ... 7000 Nm (70.1 ... 5163 lb_f-ft)	**10/38**

10

© Siemens AG 2017

Overview

In combination with the SINAMICS S120 drive system, SIMOTICS L-1FN3 linear motors provide an optimally tuned linear direct drive system for the requirements of modern mechanical engineering.

The motors comprise a primary section and a secondary section track with magnets made of rare-earth material. The primary section has fixed dimensions, while the secondary section track is made up of individual elements (secondary sections) to suit the required traversing range. Through parallel operation of the motors, feedrate force and length can be scaled beyond the available spectrum.

Benefits

- Outstanding dynamic response and very high traversing velocity
- Excellent precision
- Simple installation
- Drive components are free of wear thanks to contactless drive force transmission

The main advantage of linear direct drive technology is the extensive avoidance of the effects of elasticity, play, and friction, as well as natural oscillation in the drive train. This results in a higher dynamic response and increased precision. If suitable measuring systems are used and the temperature conditions are appropriate, the motors can be positioned in the nanometer range.

Application

Version for peak load

Used in machine axes that are temporarily accelerated, e.g. S3 duty, or when large forces are required for a short time.

Typical applications:

- Highly dynamic, flexible machine tool and production machine construction
- Laser machining
- Handling

Version for continuous load

Used in machine axes with constant acceleration changes, e.g. S1 duty, with high process/weight forces or for operation without water cooling.

Typical applications:

- Grinding
- Non-circular machining (e.g. oscillating applications)
- Z-axes without weight compensation, quills
- Handling, Cartesian robots

Design

The simple mechanical construction without transmission elements, such as ballscrew, coupling, or belt, enhances the reliability of the drive components.

Heat loss occurs almost exclusively in the primary section and is dissipated via an integrated liquid cooling system. The Thermo-Sandwich dual-circuit cooling system permits both a thermal decoupling of the motor from the machine, and also a low-priced cooling design.

The stainless metal encapsulation of the primary section ensures the high mechanical ruggedness and resistance to soiling required for use in machine tools and production machines, as well as high resistance to corrosive liquids. In addition, the motor places minimal demands on the preparation of mounting surfaces thanks to the large air gap. The mounting tolerances for the air gap are ± 0.3 mm (0.01 in).

Design variants

SIMOTICS L-1FN3 linear motors are available as single-sided or double-sided motors.

- Single-sided motors
  The single-sided version consists of a primary section that is arranged in parallel to the associated secondary section.
- Double-sided motors
  The special secondary section of the double-sided version is positioned between two primary sections (one primary section with standard winding and one with complementary winding). The design as a double-sided motor is particularly suitable for applications with movable secondary section and small traversing paths with fast acceleration (e.g. non-circular machining).

© Siemens AG 2017

Technical specifications

Product name	SIMOTICS L-1FN3 linear motor
Motor type	Permanent-magnet linear motor
Magnet material	Rare-earth permanent magnets
Overload ratio (F_{max}:F_{rated}) up to max. • Version for peak load • Version for continuous load	 2.75 1.7
Cooling	Water cooling
Water cooler connections	G 1/8" internal thread on all primary and secondary section coolers
Temperature influence on surrounding construction with precision cooling, max.	+4 K
Coolant inlet temperature, permissible	35 °C (95 °F) (avoid condensation) > 35 °C (95 °F) if rated motor power is reduced
Temperature monitoring integrated in the primary section winding [1]	2 monitoring circuits: Temp-S with PTC thermistor and Temp-F with Pt1000 temperature sensor
Insulation according to EN 60034-1 (IEC 60034-1)	Temperature class 155 (F) for a winding temperature of 120 °C (248 °F)
Degree of protection according to EN 60034-5 (IEC 60034-5)	IP65
Available configurations	Different graduations due to modular construction
Secondary section cover	Continuous, covering the complete secondary section track or exchangeable segment by segment
2nd rating plate	Enclosed separately
Encoder system [2] (not included in scope of supply)	Select according to general conditions specific to the application and the drive.
Connection	
• 1FN3050	Permanently connected signal and power cable, pre-assembled with connectors or with exposed core ends
• 1FN3100 ... 1FN3900	Connection cover prepared for separate power and signal cable
• 1FN3100 ... 1FN3900	Connection cover prepared for a heavy-gauge threaded joint Version for peak load
Approvals, in accordance with	cURus UR for 1FN3900-4WC00-...

Characteristic curves

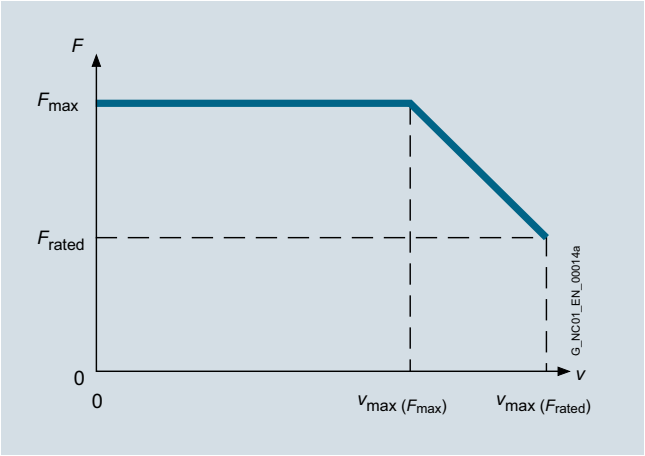

Velocity/force characteristic curve

The SIMOTICS L-1FN3 linear motors have an overload range available for acceleration processes. The maximum force F_{max} can only be utilized up to a maximum velocity $v_{max(Fmax)}$; up to velocity $v_{max(Frated)}$ only the feedrate force F_{rated} is available.

[1] Evaluation via SME120/SME125 Sensor Module External or TM120 Terminal Module, see SINAMICS S120 drive system.

[2] See recommended linear measuring systems.

© Siemens AG 2017

Selection and ordering data

Feedrate force		Maximum velocity [3]		SIMOTICS L-1FN3 linear motors Version for peak load		Weight, approx.	
				Primary section	**Secondary section**	Primary section without/with precision cooling	Secondary section without/with heatsink profiles
F_{rated} [1) 2)]	F_{max}	v_{max} at F_{max}	v_{max} at F_{rated}				
N (lb_f)	N (lb_f)	m/min (ft/min)	m/min (ft/min)	Article No.	Article No.	kg (lb)	kg (lb)
Water cooling							
200 (45.0)	550 (124)	146 (479)	373 (1224)	**1FN3050-2WC00-0 E A3**	**1FN3050-4SA00-0AA0**	2.4/2.9 (5.3/6.4)	0.4/0.5 (0.9/1.1)
		146 (479)	373 (1224)	**1FN3050-2WC00-0 F A3**			
200 (45.0)	490 (110)	138 (453)	322 (1056)	**1FN3100-1WC00-0 ■ A3**	**1FN3100-4SA00-0AA0**	2.2/– (4.9/–) [4)]	0.7/0.8 (1.5/1.8)
450 (101)	1100 (247)	131 (430)	297 (974)	**1FN3100-2WC00-0 ■ A3**		3.8/4.4 (8.4/9.7)	
		237 (778)	497 (1631)	**1FN3100-2WE00-0 ■ A3**			
675 (152)	1650 (371)	120 (394)	277 (909)	**1FN3100-3WC00-0 ■ A3**		5.4/6.2 (11.9/13.7)	
		237 (778)	497 (1631)	**1FN3100-3WE00-0 ■ A3**			
900 (202)	2200 (495)	131 (430)	297 (974)	**1FN3100-4WC00-0 ■ A3**		7.4/8.5 (16.3/18.7)	
		237 (778)	497 (1631)	**1FN3100-4WE00-0 ■ A3**			
1125 (253)	2750 (618)	109 (358)	255 (837)	**1FN3100-5WC00-0 ■ A3**		9.1/10.4 (20.1/22.9)	
340 (76.4)	820 (184)	126 (413)	282 (925)	**1FN3150-1WC00-0 ■ A3**	**1FN3150-4SA00-0AA0**	3.0/– (6.6/–) [4)]	1.2/1.3 (2.7/2.9)
300 (67.4)	820 (184)	288 (945)	605 (1985)	**1FN3150-1WE00-0 A A1**	**1FN3150-4SA00-0AA0**	3.0/– (6.6/–) [4)]	1.2/1.3 (2.7/2.9)
675 (152)	1650 (371)	126 (413)	282 (925)	**1FN3150-2WC00-0 ■ A3**		5.3/6 (11.7/13.2)	
1010 (227)	2470 (555)	126 (413)	282 (925)	**1FN3150-3WC00-0 ■ A3**		7.8/8.7 (17.2/19.2)	
1350 (303)	3300 (742)	126 (413)	282 (925)	**1FN3150-4WC00-0 ■ A3**		10.2/11.4 (22.5/25.1)	
1690 (380)	4120 (926)	126 (413)	282 (925)	**1FN3150-5WC00-0 ■ A3**		12.8/14.2 (28.2/31.3)	
610 (137)	1720 (387)	128 (420)	309 (1014)	**1FN3300-1WC00-0 ■ A3**	**1FN3300-4SA00-0AA0**	6.2/– (13.7/–) [4)]	2.4/2.6 (5.3/5.7)
1225 (275)	3450 (776)	63 (207)	176 (577)	**1FN3300-2WB00-0 ■ A3**		11.4/12.4 (25.1/27.3)	
		125 (410)	297 (974)	**1FN3300-2WC00-0 ■ A3**			
		369 (1211)	805 (2641)	**1FN3300-2WG00-0 ■ A3**			
1840 (414)	5170 (1162)	125 (410)	297 (974)	**1FN3300-3WC00-0 ■ A3**		17.0/18.4 (37.5/40.6)	
		383 (1257)	836 (2743)	**1FN3300-3WG00-0 ■ A3**			
2450 (551)	6900 (1551)	63 (207)	176 (577)	**1FN3300-4WB00-0 ■ A3**		22.2/24 (48.9/52.9)	
		125 (410)	297 (974)	**1FN3300-4WC00-0 ■ A3**			

Type of connection:	
1FN3100 to 1FN3900 motors	
Connection cover prepared for a heavy-gauge threaded joint Combined power/signal connection cable	**A**
Connection cover prepared for separate power and signal cable	**B**
1FN3050 motor	
Permanently connected power and signal cable with exposed core ends Length: 2 m (6.56 ft)	**E**
1FN3050 motor	
Permanently connected power and signal cable pre-assembled, with connectors Length: 0.5 m (1.64 ft)	**F**

Description	Article No.
Signal cable, pre-assembled with M17 connector	
For SIMOTICS L-1FN3 linear motors	
• 1FN3100/1FN3150	**6FX8002-2SL01-....**
• 1FN3300 ... 1FN3900	**6FX8002-2SL02-....**

For information on the cables, refer to MOTION-CONNECT connection systems

For footnotes, see next page.

© Siemens AG 2017

Motor type Primary section (repeated)	Rated current	Maximum current	Calculated power	**SINAMICS S120 Motor Module 5) in booksize format** Internal air cooling		**Power cable with complete shield** Motor connection via adapter cable with power connector for increased velocity/acceleration			
				Required rated current	For further components see SINAMICS S120 drive system				
	I_{rated} 1)	I_{max}	$P_{el, max.}$	I_{rated}/I_{max}		Pre-assembled adapter cable for motor 6)	Power connector	Cable cross-section 7)	Pre-assembled basic cable to drive system
	A	A	kW (hp)	A	Article No.	Article No.	Size	mm²	Article No.
1FN3050-2WC00-...	2.7	8.2	4.1 (5.50)	3/9	**6SL3120-■TE13-0AD.**	Permanent cable connection	1	4 × 2.5	**6FX8002-5CS16-....**
1FN3050-2WC00-...	2.7	8.2	4.1 (5.50)	3/9	**6SL3120-■TE13-0AD.**	Permanent cable connection	1	4 × 2.5	**6FX8002-5CS16-....**
1FN3100-1WC00-...	2.4	6.5	3.1 (4.16)	3/9	**6SL3120-■TE13-0AD.**	**6FX7002-5LM42-....**	1	4 × 2.5	**6FX8002-5CS16-....**
1FN3100-2WC00-...	5.1	13.5	6.3 (14)	5/15	**6SL3120-■TE15-0AD.**	**6FX7002-5LM42-....**	1	4 × 2.5	**6FX8002-5CS16-....**
1FN3100-2WE00-...	8.1	21.5	8.3 (11.1)	9/27	**6SL3120-■TE21-0AD.**	**6FX7002-5LM42-....**	1	4 × 2.5	**6FX8002-5CS16-....**
1FN3100-3WC00-...	7.2	19.1	9.2 (12.3)	9/27	**6SL3120-■TE21-0AD.**	**6FX7002-5LM42-....**	1	4 × 2.5	**6FX8002-5CS16-....**
1FN3100-3WE00-...	12.1	32.2	12.4 (16.6)	18/36	**6SL3120-■TE21-8AC.**	**6FX7002-5LM42-....**	1	4 × 2.5	**6FX8002-5CS16-....**
1FN3100-4WC00-...	10.1	27.0	12.6 (16.9)	18/36	**6SL3120-■TE21-8AC.**	**6FX7002-5LM42-....**	1	4 × 2.5	**6FX8002-5CS16-....**
1FN3100-4WE00-...	16.1	43.0	16.6 (22.3)	18/54	**6SL3120-1TE21-8AD.**	**6FX7002-5LM42-....**	1	4 × 2.5	**6FX8002-5CS16-....**
1FN3100-5WC00-...	11.0	29.5	14.4 (19.3)	18/36	**6SL3120-■TE21-8AC.**	**6FX7002-5LM42-....**	1	4 × 2.5	**6FX8002-5CS16-....**
1FN3150-1WC00-...	3.6	9.5	4.3 (5.77)	5/15	**6SL3120-■TE15-0AD.**	**6FX7002-5LM42-....**	1	4 × 2.5	**6FX8002-5CS16-....**
1FN3150-1WE00-...	6.4	17	6.01 (8.06)	9/27	**6SL3120-■TE21-0AD.**	**6FX7002-5LM42-....**	1	4 × 2.5	**6FX8002-5CS16 ....**
1FN3150-2WC00-...	7.2	19.1	8.7 (11.7)	9/27	**6SL3120-■TE21-0AD.**	**6FX7002-5LM42-....**	1	4 × 2.5	**6FX8002-5CS16-....**
1FN3150-3WC00-...	10.7	28.6	13.0 (17.4)	18/36	**6SL3120-■TE21-8AC.**	**6FX7002-5LM42-....**	1	4 × 2.5	**6FX8002-5CS16-....**
1FN3150-4WC00-...	14.3	38.2	17.4 (23.3)	18/54	**6SL3120-1TE21-8AD.**	**6FX7002-5LM42-....**	1	4 × 2.5	**6FX8002-5CS16-....**
1FN3150-5WC00-...	17.9	47.7	21.7 (29.1)	18/54	**6SL3120-1TE21-8AD.**	**6FX7002-5LM42-....**	1	4 × 2.5	**6FX8002-5CS16-....**
1FN3300-1WC00-...	6.5	20.0	8.7 (11.7)	9/17	**6SL3120-■TE21-0AD.**	**6FX7002-5LM62-....**	1	4 × 2.5	**6FX8002-5CS16-....**
1FN3300-2WB00-...	8.0	24.7	13.2 (17.7)	9/27	**6SL3120-■TE21-0AD.**	**6FX7002-5LM62-....**	1	4 × 2.5	**6FX8002-5CS16-....**
1FN3300-2WC00-...	12.6	39.2	16.7 (22.4)	18/54	**6SL3120-1TE21-8AD.**	**6FX7002-5LM62-....**	1	4 × 2.5	**6FX8002-5CS16-....**
1FN3300-2WG00-...	32.2	99.7	30.1 (40.4)	60/113	**6SL3120-1TE26-0AA.**	**6FX7002-5LM82-....**	1.5	4 × 6	**6FX8002-5CS54-....**
1FN3300-3WC00-...	19.0	58.7	25.1 (33.7)	30/90	**6SL3120-1TE23-0AD.**	**6FX7002-5LM62-....**	1	4 × 2.5	**6FX8002-5CS16-....**
1FN3300-3WG00-...	50.0	154.9	46.2 (62.0)	132/210	**6SL3120-1TE31-3AA.**	**6FX7002-5LM02-....**	1.5	4 × 16	**6FX8002-5CS24-....**
1FN3300-4WB00-...	16.0	49.4	26.3 (35.3)	18/54	**6SL3120-1TE21-8AD.**	**6FX7002-5LM62-....**	1	4 × 2.5	**6FX8002-5CS16-....**
1FN3300-4WC00-...	25.3	78.3	33.5 (44.9)	30/90	**6SL3120-1TE23-0AD.**	**6FX7002-5LM72-....**	1.5	4 × 4	**6FX8002-5CS46-....**

Motor Module:	
Single Motor Module	**1**
Double Motor Module	**2**
Version status	

....	Length codes	**....**

For information on the cables, refer to MOTION-CONNECT connection systems

1) For water cooling with inlet temperature 35°C (95 °F).
2) A reduction of up to 30 % must be expected in case of motor standstill, at very low velocities, or with very short traverse paths.
3) Velocity values refer to a DC link voltage of the drive system of 600 V DC.
4) No precision cooler available.
5) Optimized selection for full performance of linear motors.
6) Pre-assembled adapter cable for motor with connection type B/E/F.
7) The current carrying capacity of the power cables complies with EN 60204-1 for installation type C, for continuous duty at an ambient air temperature of 40 °C (104 °F).

© Siemens AG 2017

Selection and ordering data

Feedrate force		Maximum velocity [3]		SIMOTICS L-1FN3 linear motors Version for peak load		Weight, approx.	
				Primary section	**Secondary section**	Primary section without/with precision cooling	Secondary section without/with heatsink profiles
F_{rated} [1) 2)]	F_{max}	v_{max} at F_{max}	v_{max} at F_{rated}				
N (lb_f)	N (lb_f)	m/min (ft/min)	m/min (ft/min)	Article No.	Article No.	kg (lb)	kg (lb)
Water cooling							
1930 (434)	5180 (1165)	30 (98.4)	112 (367)	**1FN3450-2WA50-0 ■ A3**	**1FN3450-4SA00-0AA0**	15.9/17.1 (35.1/37.7)	3.8/4 (8.4/8.8)
		102 (335)	235 (771)	**1FN3450-2WB70-0 ■ A3**			
		120 (394)	275 (902)	**1FN3450-2WC00-0 ■ A3**			
		177 (581)	385 (1263)	**1FN3450-2WD00-0 A A3**			
		240 (787)	519 (1703)	**1FN3450-2WE00-0 ■ A3**			
2895 (651)	7760 (1745)	30 (98.4)	114 (374)	**1FN3450-3WA50-0 ■ A3**	**1FN3450-4SA00-0AA0**	22.6/24.3 (49.8/53.6)	3.8/4 (8.4/8.8)
		62 (203)	164 (538)	**1FN3450-3WB00-0 ■ A3**			
		90 (295)	217 (712)	**1FN3450-3WB50-0 ■ A3**			
		120 (394)	275 (902)	**1FN3450-3WC00-0 ■ A3**			
		240 (787)	519 (1703)	**1FN3450-3WE00-0 ■ A3**			
3860 (868)	10350 (2327)	62 (203)	164 (538)	**1FN3450-4WB00-0 ■ A3**		30.9/33.1 (68.1/73)	
		90 (295)	217 (712)	**1FN3450-4WB50-0 ■ A3**			
		120 (394)	275 (902)	**1FN3450-4WC00-0 ■ A3**			
		240 (787)	519 (1703)	**1FN3450-4WE00-0 ■ A3**			
2610 (587)	6900 (1551)	36 (118)	120 (394)	**1FN3600-2WA50-0 ■ A3**	**1FN3600-4SA00-0AA0**	22.2/24.7 (49/54.5)	4.6/5 (10.1/11)
		66 (217)	168 (551)	**1FN3600-2WB00-0 A A3**			
3915 (880)	10350 (2327)	58 (190)	155 (509)	**1FN3600-3WB00-0 ■ A3**		31.5/33.4 (69.5/73.7)	
		127 (417)	279 (915)	**1FN3600-3WC00-0 ■ A3**			
5220 (1174)	13800 (3102)	26 (85.3)	105 (344)	**1FN3600-4WA30-0 ■ A3**		40.8/43.3 (90/95.5)	
		58 (190)	155 (509)	**1FN3600-4WB00-0 ■ A3**			
		91 (299)	215 (705)	**1FN3600-4WB50-0 ■ A3**			
		112 (367)	254 (833)	**1FN3600-4WC00-0 ■ A3**			
4050 (910)	10350 (2327)	65 (213)	160 (525)	**1FN3900-2WB00-0 ■ A3**	**1FN3900-4SA00-0AA0**	28.2/29.7 (62.2/65.4)	7.5/7.9 (16.5/17.4)
		115 (377)	253 (830)	**1FN3900-2WC00-0 ■ A3**			
6075 (1366)	15530 (3491)	75 (246)	181 (594)	**1FN3900-3WB00-0 ■ A3**		42.2/44.3 (93.1/97.6)	
8100 (1821)	20700 (4653)	65 (213)	160 (525)	**1FN3900-4WB00-0 ■ A3**		56.2/58.9 (124/130)	
		88 (289)	203 (666)	**1FN3900-4WB50-0 ■ A3**			
		115 (377)	253 (830)	**1FN3900-4WC00-0 ■ A3**			

Type of connection:	
1FN3100 to 1FN3900 motors	
Connection cover prepared for a heavy-gauge threaded joint Combined power/signal connection cable	**A**
Connection cover prepared for separate power and signal cable	**B**

Description	Article No.
Signal cable, pre-assembled with M17 plug	
For SIMOTICS L-1FN3 linear motors	
• 1FN3100/1FN3150	**6FX8002-2SL01-....**
• 1FN3300 ... 1FN3900	**6FX8002-2SL02-....**

For information on the cables, refer to MOTION-CONNECT connection systems

For footnotes, see next page.

© Siemens AG 2017

Motor type Primary section (repeated)	Rated current	Maximum current	Calculated power	**SINAMICS S120 Motor Module [4] in booksize format** Internal air cooling		**Power cable with complete shield** Motor connection via adapter cable with power connector for increased velocity/acceleration			
				Required rated current	For further components see SINAMICS S120 drive system				
	I_{rated} [1]	I_{max}	$P_{el, max.}$	I_{rated}/I_{max}		Pre-assembled adapter cable for motor [8]	Power connector	Cable cross-section [5]	Pre-assembled basic cable to drive system
	A	A	kW (hp)	A	Article No.	Article No.	Size	mm²	Article No.
1FN3450-2WA50-...	8.6	25.3	15.9 (21.3)	9/27	**6SL3120-■TE21-0AD.**	**6FX7002-5LM62-....**	1	4 × 2.5	**6FX8002-5CS16-....**
1FN3450-2WB70-...	15.2	45.1	21.33 (28.6)	18/54	**6SL3120-■TE21- 8AD.**	**6FX7002-5LM42-....**	1	4 x 2.5	**6FX8002-5CS16 ....**
1FN3450-2WC00-...	18.8	55.3	23.1 (31.0)	30/56	**6SL3120-1TE23-0AC.**	**6FX7002-5LM62-....**	1	4 × 2.5	**6FX8002-5CS16-....**
1FN3450-2WD00-...	23.5	69.8	25.8 (34.6)	30/90	**6SL3120-1TE23-0AD.**	**6FX7002-5LM72-....**	1.5	4 x 4	**6FX8002-5CS46 ....**
1FN3450-2WE00-...	33.8	99.7	32.6 (43.7)	60/113	**6SL3120-1TE26-0AA.**	**6FX7002-5LM82-....**	1.5	4 × 6	**6FX8002-5CS54-....**
1FN3450-3WA50-...	13.2	38.8	24.68 (33.1)	18/54	**6SL3120-■TE21-8AD.**	**6FX7002-5LM42-....**	1	4 x 2.5	**6FX8002-5CS16 ....**
1FN3450-3WB00-...	17.9	52.7	27.5 (36.9)	18/54	**6SL3120-1TE21-8AD.**	**6FX7002-5LM62-....**	1	4 × 2.5	**6FX8002-5CS16-....**
1FN3450-3WB50-...	22.8	67.3	31.1 (41.7)	30/90	**6SL3120-1TE23-0AD.**	**6FX7002-5LM72-....**	1.5	4 × 4	**6FX8002-5CS46-....**
1FN3450-3WC00-...	28.1	83.0	34.6 (46.4)	30/90	**6SL3120-1TE23-0AD.**	**6FX7002-5LM72-....**	1.5	4 × 4	**6FX8002-5CS46-....**
1FN3450-3WE00-...	50.7	149.6	49.0 (65.7)	132/210	**6SL3120-1TE31-3AA.**	**6FX7002-5LM02-....**	1.5	4 × 16	**6FX8002-5CS24-....**
1FN3450-4WB00-...	23.8	70.3	36.7 (49.2)	30/90	**6SL3120-1TE23-0AD.**	**6FX7002-5LM72-....**	1.5	4 × 4	**6FX8002-5CS46-....**
1FN3450-4WB50-...	30.4	89.8	41.4 (55.5)	30/90	**6SL3120-1TE23-0AD.**	**6FX7002-5LM82-....**	1.5	4 × 6	**6FX8002-5CS56-....**
1FN3450-4WC00-...	37.5	110.6	46.2 (62.0)	60/113	**6SL3120-1TE26-0AA.**	**6FX7002-5LM32-....**	1.5	4 × 10	**6FX8002-5CS64-....**
1FN3450-4WE00-...	67.6	199.5	65.3 (87.6)	132/210	**6SL3120-1TE31-3AA.**	**6FX7008-1BB61-....** [6]	–	4 × 25	**6FX7008-1BB25-....** [7]
1FN3600-2WA50-...	12.4	36.0	21.9 (29.4)	18/36	**6SL3120-■TE21-8AC.**	**6FX7002-5LM62-....**	1	4 × 2.5	**6FX8002-5CS16-....**
1FN3600-2WB00-...	15.4	45.6	24.1 (32.3)	18/54	**6SL3120-■TE21-8AD.**	**6FX7002-5LM42-....**	1	4 x 2.5	**6FX8002-5CS16 ....**
1FN3600-3WB00-...	23.2	67.3	35.4 (47.5)	30/90	**6SL3120-1TE23-0AD.**	**6FX7002-5LM72-....**	1.5	4 × 4	**6FX8002-5CS46-....**
1FN3600-3WC00-...	35.7	105.9	44.6 (59.8)	60/113	**6SL3120-1TE26-0AA.**	**6FX7002-5LM82-....**	1.5	4 × 6	**6FX8002-5CS54-....**
1FN3600-4WA30-...	22.3	64.9	41.9 (56.2)	30/90	**6SL3120-1TE23-0AD.**	**6FX7002-5LM72-....**	1.5	4 × 4	**6FX8002-5CS46-....**
1FN3600-4WB00-...	30.9	89.8	47.2 (63.3)	30/90	**6SL3120-1TE23-0AD.**	**6FX7002-5LM82-....**	1.5	4 × 6	**6FX8002-5CS56-....**
1FN3600-4WB50-...	40.8	118.5	53.2 (71.3)	85/141	**6SL3120-1TE28-5AA.**	**6FX7002-5LM32-....**	1.5	4 × 10	**6FX8002-5CS64-....**
1FN3600-4WC00-...	46.9	136.5	55.5 (74.4)	85/141	**6SL3120-1TE28-5AA.**	**6FX7002-5LM32-....**	1.5	4 × 10	**6FX8002-5CS64-....**
1FN3900-2WB00-...	24.7	69.5	34.5 (46.3)	30/90	**6SL3120-1TE23-0AD.**	**6FX7002-5LM72-....**	1.5	4 × 4	**6FX8002-5CS46-....**
1FN3900-2WC00-...	36.7	103.3	40.9 (54.8)	60/113	**6SL3120-1TE26-0AA.**	**6FX7002-5LM32-....**	1.5	4 × 10	**6FX8002-5CS64-....**
1FN3900-3WB00-...	40.6	114.0	54.5 (73.1)	60/113	**6SL3120-1TE26-0AA.**	**6FX7002-5LM32-....**	1.5	4 × 10	**6FX8002-5CS64-....**
1FN3900-4WB00-...	49.4	138.9	68.9 (92.4)	85/141	**6SL3120-1TE28-5AA.**	**6FX7002-5LM32-....**	1.5	4 × 10	**6FX8002-5CS64-....**
1FN3900-4WB50-...	60.6	170.3	76.3 (102)	132/210	**6SL3120-1TE31-3AA.**	**6FX7002-5LM02-....**	1.5	4 × 16	**6FX8002-5CS24-....**
1FN3900-4WC00-...	73.5	206.5	81.9 (110)	132/210	**6SL3120-1TE31-3AA.**	**6FX7008-1BB61-....** [6]	–	4 × 25	**6FX7008-1BB25-....** [7]

Motor Module:	
Single Motor Module	**1**
Double Motor Module	**2**
Version status	

....	Length codes	**....**

For information on the cables, refer to MOTION-CONNECT connection systems

[1] For water cooling with inlet temperature 35°C (95 °F).
[2] A reduction of up to 30 % must be expected in case of motor standstill, at very low velocities, or with very short traverse paths.
[3] Velocity values refer to a DC link voltage of the drive system of 600 V DC.
[4] Optimized selection for full performance of linear motors.
[5] The current carrying capacity of the power cables complies with EN 60204-1 for installation type C, for continuous duty at an ambient air temperature of 40 °C (104 °F).
[6] Sold by the meter only (4 × 16 mm²). Connected to primary section with 16 mm² (< 1.5 m (492 ft)) then routed onwards through terminal box with 25 mm².
[7] Sold by the meter only (4 × 25 mm²).
[8] Pre-assembled adapter cable for motor with connection type B/E/F.

© Siemens AG 2017

Selection and ordering data

Feedrate force		Maximum velocity [3]		SIMOTICS L-1FN3 linear motors Version for continuous load		Weight, approx.	
				Primary section	**Secondary section**	Primary section without/with precision cooling	Secondary section without/with heatsink profiles
F_{rated} [1) 2)]	F_{max}	v_{max} at F_{max}	v_{max} at F_{rated}				
N (lb_f)	N (lb_f)	m/min (ft/min)	m/min (ft/min)	Article No.	Article No.	kg (lb)	kg (lb)
Water cooling							
150 (33.7)	260 (58.5)	242 (794)	435 (1427)	**1FN3050-1ND00-0EA3**	**1FN3050-4SA00-0AA0**	1.9/2.4 (4.2/5.3)	0.4/0.5 (0.9/1.1)
		242 (794)	435 (1427)	**1FN3050-1ND00-0FA3**			
300 (67.4)	510 (115)	106 (348)	202 (663)	**1FN3050-2NB80-0EA3**		3.2/4.0 (7.1/8.8)	
		106 (348)	202 (663)	**1FN3050-2NB80-0FA3**			
300 (67.4)	510 (115)	117 (384)	214 (702)	**1FN3100-1NC00-0BA3**	**1FN3100-4SA00-0AA0**	3/3.5 (6.6/7.7)	0.7/0.8 (1.5/1.8)
605 (136)	1020 (229)	170 (558)	307 (1007)	**1FN3100-2NC80-0BA3**		5.1/5.9 (11.3/13.1)	
905 (203)	1530 (344)	115 (377)	211 (692)	**1FN3100-3NC00-0BA3**		7.3/8.3 (16.1/18.03)	
1205 (271)	2040 (459)	169 (554)	305 (1001)	**1FN3100-4NC80-0BA3**		10/11.3 (22.1/24.9)	
455 (102)	770 (173)	129 (423)	234 (768)	**1FN3150-1NC20-0BA3**	**1FN3150-4SA00-0AA0**	4.1/4.6 (9.0/10.1)	1.2/1.3 (2.7/2.9)
905 (203)	1530 (344)	110 (361)	201 (659)	**1FN3150-2NB80-0BA3**		7.2/8.1 (15.9/17.9)	
1360 (306)	2300 (517)	109 (358)	200 (656)	**1FN3150-3NB80-0BA3**		10.5/11.7 (23.2/25.8)	
1360 (306)	2300 (517)	163 (535)	292 (958)	**1FN3150-3NC70-0BA3**		10.5/11.7 (23.2/25.8)	
1810 (407)	3060 (688)	109 (358)	200 (656)	**1FN3150-4NB80-0BA3**		13.8/15.2 (30.4/33.5)	

Type of connection:	
1FN3100 to 1FN3900 motors	
Connection cover prepared for separate power and signal cable	**B**
1FN3050 motor	
Permanently connected power and signal cable with open core ends Length: 2 m (6.56 ft)	**E**
1FN3050 motor	
Permanently connected power and signal cable pre-assembled, with connectors Length: 0.5 m (1.64 ft)	**F**

Description	Article No.
Signal cable, pre-assembled with M17 plug	
For SIMOTICS L-1FN3 linear motors	
• 1FN3100/1FN3150	**6FX8002-2SL01-....**
• 1FN3300 ... 1FN3900	**6FX8002-2SL02-....**

For information on the cables, refer to MOTION-CONNECT connection systems

For footnotes, see next page.

© Siemens AG 2017

Motor type Primary section (repeated)	Rated current	Maximum current	Calculated power	**SINAMICS S120 Motor Module [4] in booksize format** Internal air cooling		**Power cable with complete shield** Motor connection via adapter cable with power connector for increased velocity/acceleration			
				Required rated current	For further components see SINAMICS S120 drive system				
	I_{rated} [1]	I_{max}	$P_{el, max.}$	I_{rated}/I_{max}		Pre-assembled adapter cable for motor [7]	Power connector	Cable cross-section [5]	Pre-assembled basic cable to drive system
	A	A	kW (hp)	A	Article No.	Article No.	Size	mm²	Article No.
1FN3050-1ND...	2.8	5.9	1.7 (2.28)	3/9	**6SL3120-■TE13-0AD.**	Permanent cable connection	1	4 × 2.5	**6FX8002-5CS16-....**
1FN3050-1ND...	2.8	5.9	1.7 (2.28)	3/9	**6SL3120-■TE13-0AD.**	Permanent cable connection	1	4 × 2.5	**6FX8002-5CS16-....**
1FN3050-2NB...	2.8	5.9	2.3 (3.08)	3/9	**6SL3120-1TE13-0AD.**	Permanent cable connection	1	4 × 2.5	**6FX8002-5CS16-....**
1FN3050-2NB...	2.8	5.9	2.3 (3.08)	3/9	**6SL3120-■TE13-0AD.**	Permanent cable connection	1	4 × 2.5	**6FX8002-5CS16-....**
1FN3100-1NC...	2.8	5.9	2.1 (2.82)	3/9	**6SL3120-■TE13-0AD.**	**6FX7002-5LM42-....**	1	4 × 2.5	**6FX8002-5CS16-....**
1FN3100-2NC...	8	16.5	5.1 (6.84)	9/27	**6SL3120-■TE21-0AD.**	**6FX7002-5LM42-....**	1	4 × 2.5	**6FX8002-5CS16-....**
1FN3100-3NC...	8.5	17.6	6.3 (8.45)	9/27	**6SL3120-■TE21-0AD.**	**6FX7002-5LM42-....**	1	4 × 2.5	**6FX8002-5CS16-....**
1FN3100-4NC...	15.9	33.1	10.2 (13.7)	18/36	**6SL3120-■TE21-8AC.**	**6FX7002-5LM42-....**	1	4 × 2.5	**6FX8002-5CS16-....**
1FN3150-1NC...	4.5	9.4	3.2 (4.29)	5/15	**6SL3120-■TE15-0AD.**	**6FX7002-5LM42-....**	1	4 × 2.5	**6FX8002-5CS16-....**
1FN3150-2NB...	8	16.5	5.8 (7.78)	9/27	**6SL3120-■TE21-0AD.**	**6FX7002-5LM42-....**	1	4 × 2.5	**6FX8002-5CS16-....**
1FN3150-3NB...	11.9	24.8	8.44 (11.3)	18/36	**6SL3120-■TE21-8AC.**	**6FX7002-5LM42-....**	1	4 × 2.5	**6FX8002-5CS16 ....**
1FN3150-3NC...	16.9	35.2	10.8 (14.5)	18/36	**6SL3120-■TE21-8AC.**	**6FX7002-5LM42-....**	1	4 × 2.5	**6FX8002-5CS16-....**
1FN3150-4NB...	15.9	33.1	11.6 (15.6)	18/36	**6SL3120-■TE21-8AC.**	**6FX7002-5LM42-....**	1	4 × 2.5	**6FX8002-5CS16-....**

Motor Module:	
Single Motor Module	**1**
Double Motor Module	**2**
Version status	

....	Length codes	**....**

For information on the cables, refer to MOTION-CONNECT connection systems

10

[1] For water cooling with inlet temperature 35 °C (95 °F).

[2] A reduction of up to 30 % must be expected in case of motor standstill, at very low velocities, or with very short traverse paths.

[3] Velocity values refer to a DC link voltage of the drive system of 600 V DC.

[4] Optimized selection for full performance of linear motors.

[5] The current carrying capacity of the power cables complies with EN 60204-1 for installation type C, for continuous duty at an ambient air temperature of 40 °C (104 °F).

[6] Power modules are designed for feedrate force F_{rated}. If feedrate force F_{max} is utilized, the next larger power module must be selected. If a power module with a higher rating is used, you must check whether the specified power cable can be connected to it.

[7] Pre-assembled adapter cable for motor with connection type B/E/F.

© Siemens AG 2017

Selection and ordering data

Feedrate force		Maximum velocity 3)		SIMOTICS L-1FN3 linear motors Version for continuous load		Weight, approx.	
				Primary section	**Secondary section**	Primary section without/with precision cooling	Secondary section without/with heatsink profiles
F_{rated} 1) 2)	F_{max}	v_{max} at F_{max}	v_{max} at F_{rated}				
N (lb_f)	N (lb_f)	m/min (ft/min)	m/min (ft/min)	Article No.	Article No.	kg (lb)	kg (lb)
Water cooling							
865 (194)	1470 (330)	129 (423)	230 (755)	**1FN3300-1NC10-0BA3**	**1FN3300-4SA00-0AA0**	8.8/9.5 (19.4/20.9)	2.4/2.6 (5.3/5.7)
1730 (389)	2940 (661)	127 (417)	228 (748)	**1FN3300-2NC10-0BA3**		16.1/17.2 (35.5/37.9)	
2595 (583)	4400 (989)	88 (289)	160 (525)	**1FN3300-3NB50-0BA3**	**1FN3300-4SA00-0AA0**	22.8/24.2 (50.3/53.4)	2.4/2.6 (5.3/5.7)
2595 (583)	4400 (989)	144 (472)	257 (843)	**1FN3300-3NC40-0BA3**		22.8/24.3 (50.3/53.6)	
3460 (778)	5870 (1320)	109 (358)	196 (643)	**1FN3300-4NB80-0BA3**		30.4/32.3 (67.0/71.2)	
2595 (583)	4400 (989)	82 (269)	149 (489)	**1FN3450-2NB40-0BA3**	**1FN3450-4SA00-0AA0**	22/23.2 (48.5/51.2)	3.8/4 (8.4/8.8)
2595 (583)	4400 (989)	107 (351)	191 (627)	**1FN3450-2NB80-0BA3**	**1FN3450-4SA00-0AA0**	22/23.2 (48.5/51.2)	3.8/4 (8.4/8.8)
2595 (583)	4400 (989)	153 (502)	271 (889)	**1FN3450-2NC50-0BA3**	**1FN3450-4SA00-0AA0**	22/23.2 (48.5/51.2)	3.8/4 (8.4/8.8)
3890 (875)	6600 (1484)	93 (305)	168 (551)	**1FN3450-3NB50-0BA3**	**1FN3450-4SA00-0AA0**	32/33.6 (70.6/74.1)	3.8/4 (8.4/8.8)
3890 (875)	6600 (1484)	152 (499)	270 (886)	**1FN3450-3NC50-0BA3**		32/33.6 (70.6/74.1)	
5185 (1166)	8810 (1981)	106 (348)	190 (623)	**1FN3450-4NB80-0BA3**		42.3/44.3 (93.3/97.9)	
3460 (778)	5870 (1320)	112 (367)	200 (656)	**1FN3600-2NB80-0BA3**	**1FN3600-4SA00-0AA0**	28.9/30.4 (63.7/67.0)	4.6/5 (10.1/11)
5185 (1166)	8810 (1981)	111 (364)	199 (653)	**1FN3600-3NB80-0BA3**		42.9/45.0 (94.6/99.2)	
6915 (1555)	11740 (2639)	43 (141)	85 (279)	**1FN3600-4NA70-0BA3**	**1FN3600-4SA00-0AA0**	56.6/59.2 (124.8/130.54)	4.6/5 (10.1/11)
6915 (1555)	11740 (2639)	111 (364)	199 (653)	**1FN3600-4NB80-0BA3**		56.6/59.2 (124.8/130.54)	
5185 (1166)	8810 (1981)	71 (233)	130 (427)	**1FN3900-2NB20-0BA3**	**1FN3900-4SA00-0AA0**	42.4/44.2 (93.5/97.5)	7.5/7.9 (16.5/17.4)
7780 (1749)	13210 (2970)	71 (233)	129 (423)	**1FN3900-3NB20-0BA3**		62/64.5 (136.7/142.2)	
10375 (2332)	17610 (3959)	29 (95.1)	60 (197)	**1FN3900-4NA50-0BA3**	**1FN3900-4SA00-0AA0**	82.2/85.3 (181.3/188.1)	7.5/7.9 (16.5/17.4)
10375 (2332)	17610 (3959)	70 (230)	129 (423)	**1FN3900-4NB20-0BA3**		82.2/85.3 (181.3/188.1)	

Type of connection:	
1FN3100 to 1FN3900 motors Connection cover prepared for separate power and signal cable	**B**
1FN3050 motor Permanently connected power and signal cable with open core ends Length: 2 m (6.56 ft)	**E**
1FN3050 motor Permanently connected power and signal cable pre-assembled, with connectors Length: 0.5 m (1.64 ft)	**F**

Description	Article No.
Signal cable, pre-assembled with M17 plug	
For SIMOTICS L-1FN3 linear motors	
• 1FN3100/1FN3150	**6FX8002-2SL01-....**
• 1FN3300 ... 1FN3900	**6FX8002-2SL02-....**

For information on the cables, refer to MOTION-CONNECT connection systems

For footnotes, see next page.

© Siemens AG 2017

Motor type Primary section (repeated)	Rated current	Maximum current	Calculated power	**SINAMICS S120 Motor Module 4) in booksize format** Internal air cooling		**Power cable with complete shield** Motor connection via adapter cable with power connector for increased velocity/acceleration			
				Required rated current	For further components see SINAMICS S120 drive system				
	I_{rated} 1)	I_{max}	$P_{el, max.}$	I_{rated}/I_{max}		Pre-assembled adapter cable for motor 7)	Power connector	Cable cross-section 5)	Pre-assembled basic cable to drive system
	A	A	kW (hp)	A	Article No.	Article No.	Size	mm²	Article No.
1FN3300-1NC...	8.1	17.1	5.4 (7.24)	9/27	**6SL3120-■TE21-0AD.**	**6FX7002-5LM62-....**	1	4 × 2.5	**6FX8002-5CS16-....**
1FN3300-2NC...	16.2	34.1	10.7 (14.3)	18/36	**6SL3120-■TE21-8AC.**	**6FX7002-5LM62-....**	1	4 × 2.5	**6FX8002-5CS16-....**
1FN3300-3NB...	17.6	36.9	13 (17.4)	18/36	**6SL3120-■TE21- 8AC.**	**6FX7002-5LM42-....**	1	4 x 2.5	**6FX8002-5CS16 ....**
1FN3300-3NC...	27.3	57.4	17.3 (23.2)	30/90 6)	**6SL3120-1TE23-0AD.**	**6FX7002-5LM72-....**	1.5	4 × 4	**6FX8002-5CS46-....**
1FN3300-4NB...	28.4	59.6	19.6 (26.3)	30/90 6)	**6SL3120-1TE23-0AD.**	**6FX7002-5LM72-....**	1.5	4 × 4	**6FX8002-5CS46-....**
1FN3450-2NB...	16.2	34.1	12 (16.1)	18/36	**6SL3120-■TE21-8AC.**	**6FX7002-5LM42-....**	1	4 x 2.5	**6FX8002-5CS16 ....**
1FN3450-2NB...	20.4	42.9	13.7 (18.4)	30/56	**6SL3120-1TE23-0AC.**	**6FX7002-5LM42-....**	1	4 x 2.5	**6FX8002-5CS16 ....**
1FN3450-2NC...	28.4	59.6	17.4 (23.3)	30/90 6)	**6SL3120-1TE23-0AD.**	**6FX7002-5LM72-....**	1.5	4 × 4	**6FX8002-5CS46-....**
1FN3450-3NB...	27.3	57.4	19.1 (25.6)	30/90	**6SL3120-1TE23-0AD.**	**6FX7002-5LM72-....**	1.5	4 x 4	**6FX8002-5CS46 ....**
1FN3450-3NC...	42.5	89.5	26.1 (35.0)	45/85 6)	**6SL3120-1TE24-5AA.**	**6FX7002-5LM32-....**	1.5	4 × 10	**6FX8002-5CS64-....**
1FN3450-4NB...	40.8	85.8	27.9 (37.4)	45/85 6)	**6SL3120-1TE24-5AA.**	**6FX7002-5LM32-....**	1.5	4 × 10	**6FX8002-5CS64-....**
1FN3600-2NB...	28.4	59.6	19.3 (25.9)	30/90 6)	**6SL3120-1TE23-0AD.**	**6FX7002-5LM72-....**	1.5	4 × 4	**6FX8002-5CS46-....**
1FN3600-3NB...	42.5	89.5	28.9 (38.8)	45/85 6)	**6SL3120-1TE24-5AA.**	**6FX7002-5LM32-....**	1.5	4 × 10	**6FX8002-5CS64-....**
1FN3600-4NA...	26.3	55.3	24.8 (33.3)	30/56	**6SL3120-1TE23-0AC.**	**6FX7002-5LM72-....**	1.5	4 x 4	**6FX8002-5CS46 ....**
1FN3600-4NB...	56.7	119.3	38.5 (51.6)	60/113 6)	**6SL3120-1TE26-0AA.**	**6FX7002-5LM02-....**	1.5	4 × 16	**6FX8002-5CS24-....**
1FN3900-2NB...	28.4	59.6	22.3 (29.9)	30/90 6)	**6SL3120-1TE23-0AD.**	**6FX7002-5LM72-....**	1.5	4 × 4	**6FX8002-5CS46-....**
1FN3900-3NB...	42.5	89.5	33.4 (44.8)	45/85 6)	**6SL3120-1TE24-5AA.**	**6FX7002-5LM32-....**	1.5	4 × 10	**6FX8002-5CS64-....**
1FN3900-4NA...	29.3	61.6	31.6 (42.4)	30/90	**6SL3120-1TE23-0AD.**	**6FX7002-5LM72-....**	1.5	4 x 4	**6FX8002-5CS46 ....**
1FN3900-4NB...	56.7	119.3	44.5 (59.7)	60/113 6)	**6SL3120-1TE26-0AA.**	**6FX7002-5LM02-....**	1.5	4 × 16	**6FX8002-5CS24-....**

Motor Module:	
Single Motor Module	**1**
Double Motor Module	**2**
Version status	

....	Length codes	**....**

For information on the cables, refer to MOTION-CONNECT connection systems

1) For water cooling with inlet temperature 35 °C (95 °F).

2) A reduction of up to 30 % must be expected in case of motor standstill, at very low velocities, or with very short traverse paths.

3) Velocity values refer to a DC link voltage of the drive system of 600 V DC.

4) Optimized selection for full performance of linear motors.

5) The current carrying capacity of the power cables complies with EN 60204-1 for installation type C, for continuous duty at an ambient air temperature of 40 °C (104 °F).

6) Power modules are designed for feedrate force F_{rated}. If feedrate force F_{max} is utilized, the next larger power module must be selected. If a power module with a higher rating is used, you must check whether the specified power cable can be connected to it.

7) Pre-assembled adapter cable for motor with connection type B/E/F.

© Siemens AG 2017

Selection and ordering data

SIMOTICS L-1FN3 linear motors Type	**Optional components** **Secondary section cover** Continuous [1] Article No.	Segmented Article No.	**Cover end pieces for secondary section cover** [2] Retention of the continuous cover without heatsink profiles Article No.
1FN3050-...	**1FN3050-0TB00-1 ■ ■ 0**	**1FN3050-4TP00-1A ■ ■**	**1FN3050-0TC00-0AA0**
1FN3100-...	**1FN3100-0TB00-1 ■ ■ 0**	**1FN3100-4TP00-1A ■ ■**	**1FN3100-0TC00-0AA0**
1FN3150-...	**1FN3150-0TB00-1 ■ ■ 0**	**1FN3150-4TP00-1A ■ ■**	**1FN3150-0TC00-0AA0**
1FN3300-...	**1FN3300-0TB00-1 ■ ■ 0**	**1FN3300-4TP00-1A ■ ■**	**1FN3300-0TC00-0AA0**
1FN3450-...	**1FN3450-0TB00-1 ■ ■ 0**	**1FN3450-4TP00-1A ■ ■**	**1FN3450-0TC00-0AA0**
1FN3600-...	**1FN3600-0TB00-1 ■ ■ 0**	**1FN3600-4TP00-1A ■ ■**	**–**
1FN3900-...	**1FN3900-0TB00-1 ■ ■ 0**	**1FN3900-4TP00-1A ■ ■**	**–**

Number of Secondary sections	0	**A**
	10	**B**
	20	**C**
	30	**D**
	40	**E**
	50	**F**
	0	**A**
	1	**B**
	2	**C**
	3	**D**
	4	**E**
	5	**F**
	6	**G**
	7	**H**
	8	**J**
	9	**K**

Number of secondary sections for all motors	2.5	**C**	**5**
	3	**D**	**0**
	3.5	**D**	**5**
	4	**E**	**0**
	5	**F**	**0**
Number of secondary sections for 1FN3600/1FN3900 motors	5.5	**F**	**5**
	6.5	**G**	**5**

SIMOTICS L-1FN3 linear motors Version for peak load Type	**Optional components** **Precision cooler** Article No.
1FN3050-2W...	**1FN3050-2PK00-0AA0**
1FN3100-2W...	**1FN3100-2PK00-0AA0**
1FN3100-3W...	**1FN3100-3PK00-0AA0**
1FN3100-4W...	**1FN3100-4PK00-0AA0**
1FN3100-5W...	**1FN3100-5PK00-0AA0**
1FN3150-2W...	**1FN3150-2PK00-0AA0**
1FN3150-3W...	**1FN3150-3PK00-0AA0**
1FN3150-4W...	**1FN3150-4PK00-0AA0**
1FN3150-5W...	**1FN3150-5PK00-0AA0**
1FN3300-2W...	**1FN3300-2PK00-0AA0**
1FN3300-3W...	**1FN3300-3PK00-0AA0**
1FN3300-4W...	**1FN3300-4PK00-0AA0**
1FN3450-2W...	**1FN3450-2PK00-0AA0**
1FN3450-3W...	**1FN3450-3PK00-0AA0**
1FN3450-4W...	**1FN3450-4PK00-0AA0**
1FN3600-2W...	**1FN3600-2PK00-0AA0**
1FN3600-3W...	**1FN3600-3PK00-0AA0**
1FN3600-4W...	**1FN3600-4PK00-0AA0**
1FN3900-2W...	**1FN3900-2PK00-0AA0**
1FN3900-3W...	**1FN3900-3PK00-0AA0**
1FN3900-4W...	**1FN3900-4PK00-0AA0**

SIMOTICS L-1FN3 linear motors Version for continuous load Type	**Optional components** **Precision cooler** Article No.
1FN3050-1N...	**1FN3050-1PK10-0AA0**
1FN3050-2N...	**1FN3050-2PK10-0AA0**
1FN3100-1N...	**1FN3100-1PK10-0AA0**
1FN3100-2N...	**1FN3100-2PK10-0AA0**
1FN3100-3N...	**1FN3100-3PK10-0AA0**
1FN3100-4N...	**1FN3100-4PK10-0AA0**
1FN3150-1N...	**1FN3150-1PK10-0AA0**
1FN3150-2N...	**1FN3150-2PK10-0AA0**
1FN3150-3N...	**1FN3150-3PK10-0AA0**
1FN3150-4N...	**1FN3150-4PK10-0AA0**
1FN3300-1N...	**1FN3300-1PK10-0AA0**
1FN3300-2N...	**1FN3300-2PK10-0AA0**
1FN3300-3N...	**1FN3300-3PK10-0AA0**
1FN3300-4N...	**1FN3300-4PK10-0AA0**
1FN3450-2N...	**1FN3450-2PK10-0AA0**
1FN3450-3N...	**1FN3450-3PK10-0AA0**
1FN3450-4N...	**1FN3450-4PK10-0AA0**
1FN3600-2N...	**1FN3600-2PK10-0AA0**
1FN3600-3N...	**1FN3600-3PK10-0AA0**
1FN3600-4N...	**1FN3600-4PK10-0AA0**
1FN3900-2N...	**1FN3900-2PK10-0AA0**
1FN3900-3N...	**1FN3900-3PK10-0AA0**
1FN3900-4N...	**1FN3900-4PK10-0AA0**

[1] Integrated cover for several secondary sections. The maximum length of the secondary section cover is 6 m (19.7 ft). For the following motors, this corresponds to: 1FN3050 to 1FN3150, a maximum number of 50 secondary sections (AB to FA). 1FN3300 to 1FN3900, a maximum number of 32 secondary sections (AB to DC).

[2] The secondary section end pieces are designed to allow clamping of the integrated secondary section cover.

© Siemens AG 2017

Selection and ordering data (continued)

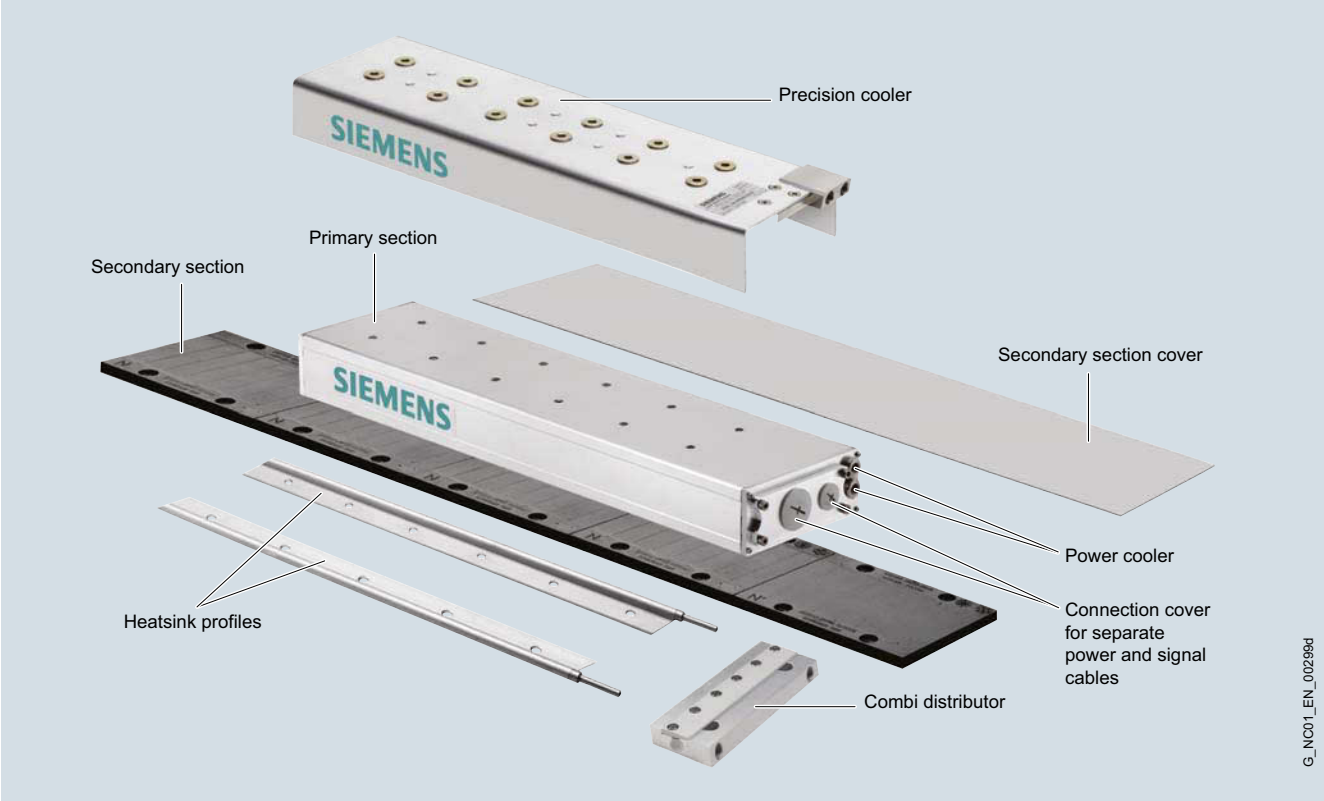

SIMOTICS L-1FN3 linear motors	Optional components			
Type	**Heatsink profile** [1]	**Secondary section end pieces** [2]		
		Combi distributor	**Combi adapter**	**Combi end piece**
		Parallel water connection for all heatsink profiles	Combi adapter and end piece can only be implemented together.	
			Single-sided water connection	Water diversion
	Article No.	Article No.	Article No.	Article No.
1FN3050-...	**1FN3002-0TK0 ■ -1 ■ ■ 0**	**1FN3050-0TJ01-0AA0**	**1FN3050-0TG01-0AA0**	**1FN3050-0TF01-0AA0**
1FN3100-...	**1FN3002-0TK0 ■ -1 ■ ■ 0**	**1FN3100-0TJ01-0AA0**	**1FN3100-0TG01-0AA0**	**1FN3100-0TF01-0AA0**
1FN3150-...	**1FN3002-0TK0 ■ -1 ■ ■ 0**	**1FN3150-0TJ01-0AA0**	**1FN3150-0TG01-0AA0**	**1FN3150-0TF01-0AA0**
1FN3300-...	**1FN3003-0TK0 ■ -1 ■ ■ 0**	**1FN3300-0TJ01-0AA0**	**1FN3300-0TG01-0AA0**	**1FN3300-0TF01-0AA0**
1FN3450-...	**1FN3003-0TK0 ■ -1 ■ ■ 0**	**1FN3450-0TJ01-0AA0**	**1FN3450-0TG01-0AA0**	**1FN3450-0TF01-0AA0**
1FN3600-...	**1FN3004-0TK0 ■ -1 ■ ■ 0**	**1FN3600-0TJ01-0AA0**	–	–
1FN3900-...	**1FN3005-0TK0 ■ -1 ■ ■ 0**	**1FN3900-0TJ01-0AA0**	–	–

With plug-in coupling prepared for connection to combi distributor with plug-in coupling, combi adapter with plug-in coupling, combi end piece with plug-in coupling, or as intermediate unit for heatsink profile with cable grommet nipple	**4**			**Number of Secondary sections**
		A		0
		B		10
		C		20
1FN3050 to 1FN3450 motors [3]: **Grommet nipple only on right end** of secondary section track	**6**		**A**	0
			B	1
			C	2
			D	3
			E	4
1FN3600/1FN3900 motors: **Grommet nipple on both ends** of secondary section track	**6**		**F**	5
			G	6
			H	7
1FN3050 to 1FN3450 motors [3]: **Grommet nipple only on left end** of secondary section track	**7**		**J**	8
			K	9

[1] 1FN3050 to 1FN3450 motors:
2 units required per secondary section track.
1FN3600 to 1FN3900:
3 units required per secondary section track.
The maximum available length of a single-part heatsink profile is 3 m (9.84 ft).
For the following motors, this corresponds to:
1FN3050 to 1FN3150, a maximum number of 24 secondary sections (AB to CE)
1FN3300 to 1FN3900, a maximum number of 16 secondary sections (AB to BG).

[2] The secondary section end pieces are designed to allow clamping of the integrated secondary section cover.

[3] Available only in length AC (equals 2 secondary sections). The difference in the secondary section track length must be compensated through assembly with the heatsink profile 1FN300.-0TK04-1..0.

© Siemens AG 2017

Overview

The hall-effect sensor box may be required with incremental length measuring systems for SIMOTICS L-1FN3 linear motors when the software methods for pole position identification cannot be applied.

Selection and ordering data

SIMOTICS L-1FN3 linear motors	**Hall-effect sensor box**	
	Straight cable outlet	Cable outlet at side
Type	Article No.	Article No.
Mounted opposite primary section terminal end		
1FN3050-2... 1FN3100-2... 1FN3100-4... 1FN3150-2... 1FN3150-4...	**1FN3002-0PH00-0AA0**	**1FN3002-0PH01-0AA0**
1FN3100-1... 1FN3100-3... 1FN3100-5... 1FN3150-1... 1FN3150-3... 1FN3150-5...	**1FN3005-0PH00-0AA0**	**1FN3005-0PH01-0AA0**
1FN3300-2... 1FN3300-4... 1FN3450-2... 1FN3450-4... 1FN3600-2... 1FN3600-4... 1FN3900-2... 1FN3900-4...	**1FN3003-0PH00-0AA0**	**1FN3003-0PH01-0AA0**
1FN3300-1... 1FN3300-3... 1FN3450-3... 1FN3600-3... 1FN3900-3...	**1FN3006-0PH00-0AA0**	**1FN3006-0PH01-0AA0**
Mounted on primary section terminal end		
1FN3050-... 1FN3100-... 1FN3150-...	**1FN3002-0PH00-0AA0**	**1FN3002-0PH01-0AA0**
1FN3300-... 1FN3450-... 1FN3600-... 1FN3900-...	**1FN3003-0PH00-0AA0**	**1FN3003-0PH01-0AA0**

© Siemens AG 2017

Overview

Recommended linear measuring systems for SIMOTICS L-1FN3 linear motors

	Incremental encoder sin/cos 1 V_{pp} encapsulated	
Type	**LS 187**	**LS 487**
Signal cycle	20 µm	20 µm
Acceleration in measuring direction, max.	100 m/s^2 (328 ft/s^2)	100 m/s^2 (328 ft/s^2)
Traversing velocity, max.	120 m/min (394 ft/min)	120 m/min (394 ft/min)
Measuring length, max.	3040 mm (120 in)	2040 mm (80.3 in)
Output signal	1 V_{pp}	1 V_{pp}

	Incremental encoder sin/cos 1 V_{pp} open	
Type	**LIDA 485**	**Renishaw RG2**
Signal cycle	20 µm	20 µm
Acceleration in measuring direction, max. [1)]	200 m/s^2 (656 ft/s^2)	300 m/s^2 (984 ft/s^2)
Traversing velocity, max.	480 m/min (1575 ft/min)	300 m/min (984 ft/min)
Measuring length, max.	30040 mm (1183 in)	50000 mm (1968 in)
Output signal	1 V_{pp}	1 V_{pp}

Absolute encoders with DRIVE-CLiQ

Absolute measuring systems with integrated DRIVE-CLiQ interface are available from various manufacturers. The absolute encoders can be used as a motor feedback system.

An up-to-date list of the relevant manufacturers and available measuring systems can be viewed on the Internet at:
http://support.automation.siemens.com/WW/view/en/65402168
It is also possible to use absolute measuring systems with EnDat 2.1.

Overview

Liquid cooling

Non-Siemens products whose fundamental suitability is familiar to us. It goes without saying that equivalent products from other manufacturers may be used. Our recommendations are to be seen as helpful information, not as requirements or regulations. We do not accept liability for the quality of non-Siemens products.

Please get in touch with the cooler manufacturers listed below for technical information.

ait-deutschland GmbH
www.kkt-chillers.com

BKW Kälte-Wärme-Versorgungstechnik GmbH
www.bkw-kuema.de

Helmut Schimpke und Team Industriekühlanlagen GmbH + Co. KG
www.schimpke.com

Hydac System GmbH
www.hydac.com

Pfannenberg GmbH
www.pfannenberg.com

Rittal GmbH & Co. KG
www.rittal.com

For design information about the coolers, refer to the SIMOTICS L-1FN3 Linear Motors Configuration Manual.

© Siemens AG 2017

Overview

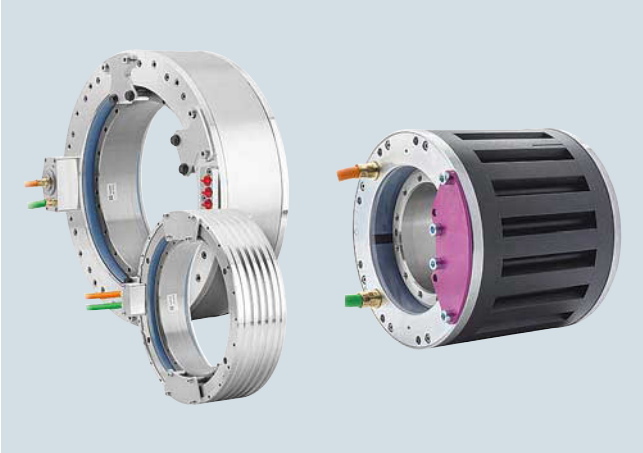

SIMOTICS T-1FW6 built-in torque motors with jacket cooling (in center), naturally cooled (on right) and with integrated cooling (on left)

SIMOTICS T-1FW6 built-in torque motors are liquid-cooled or naturally cooled multi-pole permanent-magnet AC synchronous motors with a hollow shaft. The motors are supplied as built-in components that are held together in the delivered state by transport locks. For a complete drive unit, an additional bearing and shaft encoder are required.

Each frame size is available in different axis lengths. Most stators and rotors are equipped with flanges at each end with centering surfaces and threaded holes for installation in the machine.

Please note that when SIMOTICS T-1FW6 torque motors are used in fork heads for machine tools or robots, a license for US patent US5584621 and the associated international patent protection may be required. Please observe the national and international licensing conditions when using torque motors so that no infringements of industrial property rights occur.

Benefits

- No elasticity in the drive train
- High availability, since there are no gear components subject to wear in the drive train
- High torque, compact design, and low construction volume
- Low moment of inertia
- Direct coupling to the machine using flanges

Application

In conjunction with the SINAMICS S120 drive system, the SIMOTICS T-1FW6 built-in torque motors can be used for the following machine applications:

- Rotary indexing machines
- Rotary tables and dividing heads
- Rotary axes
  (A, B, C axis on 5-axis machine tools)
- Turret indexing and cylinder indexing for single-spindle and multi-spindle machines
- Workpiece spindles
- Roller and cylinder drives
- Infeed and handling axes
- Tablet presses
- Medical application
- Measuring machines

© Siemens AG 2017

Design

The SIMOTICS T-1FW6 built-in torque motor comprises the following components:

Stator

Design in 3-phase AC winding. The stator is generally designed for operation with liquid cooling.

Rotor

Cylindrical hollow shaft made of steel with permanent magnets fixed to the circumference.

If the main cooler and precision cooler are used together in a cooling unit, a cooling connection adapter (accessory) can be ordered separately for simpler connection.

Cooler types

The design of the cooling system is dependent on the size (external diameter) of the motor.

SIMOTICS T-1FW6 built-in torque motor Type	**Cooling method**
1FW6050 and 1FW6060	Integrated water cooling with one cooling circuit
1FW6053 and 1FW6063	Natural cooling
1FW6090 ... 1FW6150	Jacket water cooling
1FW6160 ... 1FW6290	Integrated water cooling with two cooling circuits

Naturally cooled motors

Naturally cooled motors have the same dimensions as water-cooled motors in frame sizes 1FW6050 and 1FW6060, but have a lower continuous torque capability because they are naturally cooled. They can be used for any application for which liquid-cooled motors would be deemed undesirable or unnecessary. As the mechanical interfaces are also compatible in addition to the dimensions, the cooling method can be changed without high integration effort.

Components of naturally cooled motors in frame sizes 1FW6053 and 1FW6063 (rotor and stator)

Motors with integrated single-circuit water cooling

These motors have a ready-to-connect, integrated single-circuit cooling system; they are compact and therefore suitable for easy integration into a machine.

Motor components of sizes 1FW6050 and 1FW6060 with integrated single-circuit cooling (rotor, stator)

© Siemens AG 2017

Design (continued)

Motors with jacket water cooling

The coolant inlet/return flow circuit must be provided by the machine manufacturer in the surrounding construction.

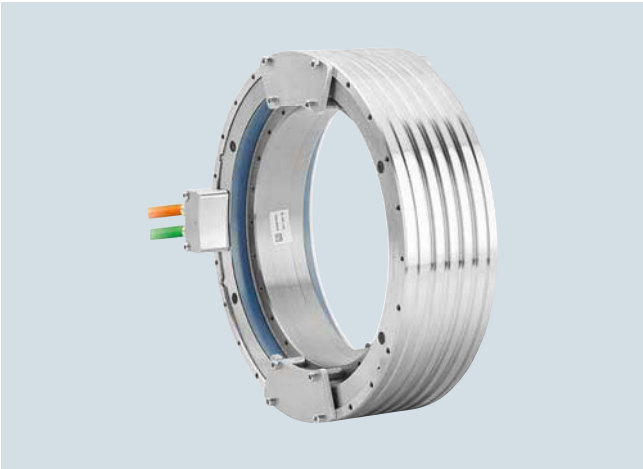

Components of motors in frame sizes 1FW6090 to 1FW6150 with jacket water cooling (rotor and stator)

Motors with integrated dual-circuit water cooling

These motors feature a ready-to-connect, integrated dual-circuit water cooling system and are therefore thermally insulated to a large extent against the mechanical axis construction.

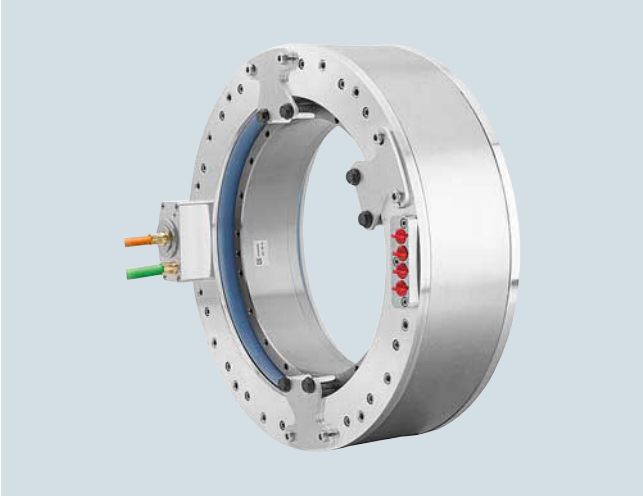

Components of motors in frame sizes 1FW6160 to 1FW6290 with integrated water cooling with two cooling circuits (rotor and stator)

© Siemens AG 2017

Integration

The SIMOTICS T-1FW6 built-in torque motors supplied via the SINAMICS S120 drive system are designed for operation on a 600 V DC link voltage level.

The cable connection is brought out of the front face of the stator. The cable end has a pre-assembled connector or exposed cable cores depending on the motor design. The length of the power and signal cables from the motor to the drive system must not exceed 50 m (164 ft).

Absolute measuring systems with DRIVE-CLiQ

Measuring systems with integrated DRIVE-CLiQ interface are available from various manufacturers. The encoders can be used as a motor feedback system.

An up-to-date list of the relevant manufacturers and available measuring systems can be viewed on the Internet at:

http://support.automation.siemens.com/WW/view/en/65402168

It is also possible to use absolute measuring systems with EnDat 2.1 or incremental systems with 1 V_{PP}.

Technical specifications

Product name	SIMOTICS T-1FW6 built-in torque motor
Motor type	Synchronous motor with permanent-magnet rotor, multi-pole (22 to 98 rotor poles)
Torque ripple	≤ 1.5 % M_0
Coolant inlet temperature, maximum	35 °C (95 °F)
Pressure in cooling circuit, maximum	10 bar (static)
Thermal motor protection in accordance with DIN 44081/DIN 44082 [1]	
• 1FW6050 and 1FW6060 (water cooling) 1FW6053 and 1FW6063 (natural cooling)	1 × PTC thermistor triplet with response threshold +130 °C (266 °F)
• 1FW6090 ... 1FW6290 (water cooling)	2 × PTC thermistor triplet with response threshold +130 °C/150 °C (266 °F/302°F)
Temperature monitoring in accordance with EN 60034-111) [1]	
• 1FW6050 ... 1FW6290	1 x temperature sensor
Stator winding insulation in accordance with EN 60034-1	Temperature class 155 (F)
Format	Individual components: Stator, rotor
Degree of protection to EN 60034-5	IP23 The final degree of protection (minimum degree of protection is IP54) for the installed motor is determined by the machine manufacturer. Protection against touch, foreign bodies, and water for electrical equipment is specified in accordance with IEC 60034-5.
Measuring system (not included in scope of supply)	Select according to basic conditions specific to the application and the drive.
Connection, electrical	Permanently connected power and signal cables
Paint finish	Unpainted
Rating plate	1 unit enclosed separately
Certificate of suitability	cURus

[1] Evaluation via SME120/SME125 Sensor Module or TM120 Terminal Module (see SINAMICS S120 drive system).

© Siemens AG 2017

Selection and ordering data

Maximum torque	Static torque [1]	Rated torque [2]	Speed at maximum torque, max. [2]	Rated speed [2]	**SIMOTICS T-1FW6 built-in torque motor**	Moment of inertia Rotor	Weight, approx. Stator + rotor
M_{max}	M_0	M_{rated}	n_{max} at M_{max}	n_{rated}		J	m
Nm (lb_f-ft)	Nm (lb_f-ft)	Nm (lb_f-ft)	rpm	rpm	Article No.	10^{-2}kgm^2 (10^{-3} x lb_f-in-s^2)	kg (lb)
Natural cooling							
34.4 (25.4)	11.3 (8.33)	9.91 (7.31)	695	600	**1FW6053-0■B03-0F■1**	0.139 (0.12)	3.7 (8.16)
57.5 (42.4)	16.6 (12.2)	13.8 (10.2)	374	600	**1FW6053-0■B05-0F■1**	0.267 (0.24)	6.5 (14.3)
81.2 (59.9)	19.2 (14.2)	15.2 (11.2)	677	600	**1FW6053-0■B07-0K■1**	0.39 (0.35)	8.5 (18.7)
116 (85.6)	24.6 (18.1)	18.6 (13.7)	428	600	**1FW6053-0■B10-0K■1**	0.488 (0.43)	12 (26.5)
174 (128)	32.5 (24.0)	22.9 (16.9)	653	600	**1FW6053-0■B15-1J■1**	0.691 (0.61)	19.8 (43.7)
64.5 (47.6)	15.5 (11.4)	14 (10.3)	325	400	**1FW6063-0■B03-0F■1**	0.347 (0.31)	7.7 (17.0)
123 (90.7)	25.7 (19.0)	22.2 (16.4)	396	400	**1FW6063-0■B05-0K■1**	0.665 (0.59)	10.5 (23.1)
166 (122)	31.5 (23.2)	25.9 (19.1)	250	400	**1FW6063-0■B07-0K■1**	0.904 (0.80)	13.1 (28.9)
226 (167)	38.1 (28.1)	28.5 (21.0)	470	400	**1FW6063-0■B10-1J■1**	1.21 (1.07)	16.8 (37.0)
332 (245)	49 (36.1)	38.9 (28.7)	257	400	**1FW6063-0■B15-1J■1**	1.72 (1.52)	23 (50.7)

Cable outlet only for 1FW6053 and 1FW6063: Axial Tangential	**K** **L**
Type of connection: Permanently connected power and signal cables with exposed core ends [4] Length: 2 m (6.56 ft) Permanently connected power and signal cables pre-assembled with connectors Length: 0.5 m (1.64 ft)	**C** **D**

For footnotes, see next page.

© Siemens AG 2017

Motor type (repeated)	Stall current [1]	Rated current [2]	Maximum current [2]	Calculated power	**SINAMICS S120 Motor Module [3]** Required rated current	**in booksize format** Internal air cooling For further components see SINAMICS S120 drive system	**Power cable with complete shield** Motor connection via power connector [4] Power connector	Cable cross-section [5]	Pre-assembled basic cable to drive system
	I_0	I_{rated}	I_{max}	$P_{el, max}$	I_{rated} / I_{max}		Size	mm^2	
	A	A	A	kW (hp)	A	Article No.			Article No.
1FW6053-0.B03-0F..	2.3	2.04	7.61	4.2 (5.63)	3/9	**6SL3120-■TE13-0AD.**	1	4 × 2.5	**6FX8002-5CS16-....**
1FW6053-0.B05-0F..	2	1.7	7.64	4.6 (6.17)	3/9	**6SL3120-■TE13-0AD.**	1	4 × 2.5	**6FX8002-5CS16-....**
1FW6053-0.B07-0K..	3.4	2.68	14.6	8.8 (11.8)	5/15	**6SL3120-■TE15-0AD.**	1	4 × 2.5	**6FX8002-5CS16-....**
1FW6053-0.B10-0K..	3.1	2.31	14.6	9.2 (12.3)	5/15	**6SL3120-■TE15-0AD.**	1	4 × 2.5	**6FX8002-5CS16-....**
1FW6053-0.B15-1J..	5.4	3.78	29.1	17.5 (23.5)	18/36	**6SL3120-■TE21-8AC.**	1	4 × 2.5	**6FX8002-5CS16-....**
1FW6063-0.B03-0F..	2.1	1.86	9.81	6 (8.05)	3/9	**6SL3120-■TE13-0AD.**	1	4 × 2.5	**6FX8002-5CS16-....**
1FW6063-0.B05-0K..	3.3	2.8	17.7	10.3 (13.8)	9/27	**6SL3120-■TE21-0AD.**	1	4 × 2.5	**6FX8002-5CS16-....**
1FW6063-0.B07-0K..	3	2.42	17.8	10.9 (14.6)	9/27	**6SL3120-■TE21-0AD.**	1	4 × 2.5	**6FX8002-5CS16-....**
1FW6063-0.B10-1J..	5	3.71	31.5	19.1 (25.6)	18/36	**6SL3120-■TE21-8AC.**	1	4 × 2.5	**6FX8002-5CS16-....**
1FW6063-0.B15-1J..	4.3	3.45	31.5	20.4 (27.4)	18/36	**6SL3120-■TE21-8AC.**	1	4 × 2.5	**6FX8002-5CS16-....**

Motor Module:	
Single Motor Module	**1**
Double Motor Module	**2**
Version status	

Length codes	**....**

For information on the cables, refer to MOTION-CONNECT connection systems

[1] Torque and current at low speeds.
[2] The values refer to a supply voltage of 400 V 3 AC ±10 % (drive system DC link voltage 600 V DC).
[3] Optimized selection for full performance of torque motors.
[4] For type of connection with exposed core ends, power and signal connectors are not included in the scope of supply of the motor and must be ordered separately.
[5] The current carrying capacity of the power cables complies with EN 60204-1 for installation type C, for continuous duty at an ambient air temperature of 40 °C (104 °F).

© Siemens AG 2017

Selection and ordering data

Maximum torque	Static torque [1) 3)]	Rated torque [2) 3)]	Speed at maximum torque, max. [2)]	Rated speed [2)]	**SIMOTICS T-1FW6 built-in torque motor**	Moment of inertia Rotor	Weight, approx. Stator + rotor
M_{max}	M_0	M_{rated}	n_{max} at M_{max}	n_{rated}		J	m
Nm (lb_f-ft)	Nm (lb_f-ft)	Nm (lb_f-ft)	rpm	rpm	Article No.	10^{-2}kgm^2 (10^{-3} x lb_f-in-s^2)	kg (lb)
Water cooling							
34.4 (25.4)	24.2 (17.8)	23.2 (17.1)	697	940	**1FW6050-0■B03-0F■1**	0.139 (0.12)	3.1 (6.83)
57.5 (42.4)	40.4 (29.8)	39.5 (29.1)	376	525	**1FW6050-0■B05-0F■1**	0.267 (0.24)	5.9 (13.0)
80.6 (59.4)	56.6 (41.7)	55.7 (41.1)	236	349	**1FW6050-0■B07-0F■1**	0.39 (0.35)	7.9 (17.4)
81.2 (59.9)	53 (39.1)	50.9 (37.5)	685	895	**1FW6050-0■B07-0K■1**		
116 (85.6)	75.8 (55.9)	73.7 (54.4)	437	589	**1FW6050-0■B10-0K■1**	0.488 (0.43)	11.4 (25.1)
174 (128)	114 (84.1)	112 (82.6)	234	348	**1FW6050-0■B15-0K■1**	0.691 (0.61)	19.2 (42.3)
		109 (80.4)	658	850	**1FW6050-0■B15-1J■1**		
64.5 (47.6)	33.3 (24.6)	32 (23.6)	330	633	**1FW6060-0■B03-0F■1**	0.347 (0.61)	7.1 (15.7)
123 (90.7)	63.1 (46.5)	62 (45.7)	126	309	**1FW6060-0■B05-0F■1**	0.665 (0.59)	9.9 (21.8)
		60.6 (44.7)	399	663	**1FW6060-0■B05-0K■1**		
166 (122)	85.4 (63.0)	84.3 (62.2)	43.3	203	**1FW6060-0■B07-0F■1**	0.904 (0.8)	12.5 (27.6)
		83 (61.2)	256	464	**1FW6060-0■B07-0K■1**		
231 (170)	119 (87.8)	117 (86.3)	133	302	**1FW6060-0■B10-0K■1**	1.21 (1,07)	16.2 (35.7)
226 (167)	116 (85.6)	111 (81.9)	471	708	**1FW6060-0■B10-1J■1**		
339 (250)	174 (128)	172 (127)	27.6	174	**1FW6060-0■B15-0K■1**	1.72 (1.52)	22.4 (49.4)
332 (245)	171 (126)	166 (122)	260	442	**1FW6060-0■B15-1J■1**		

Cable outlet only for 1FW6050 and 1FW6060: Axial Tangential	**W** **T**
Type of connection: Permanently connected power and signal cables with exposed core ends [4)] Length: 2 m (6.56 ft) Permanently connected power and signal cables pre-assembled with connectors Length: 0.5 m (1.64 ft)	**C** **D**

For footnotes, see next page.

© Siemens AG 2017

Motor type (repeated)	Stall current [1] [3]	Rated current [2] [3]	Maximum current [2]	Calculated power	**SINAMICS S120 Motor Module [5]** Required rated current	**in booksize format** Internal air cooling For further components see SINAMICS S120 drive system	**Power cable with complete shield** Motor connection via power connector [4] Power con-nector	Cable cross-section [6]	Pre-assembled basic cable to drive system
	I_0	I_{rated}	I_{max}	$P_{el, max}$	I_{rated} / I_{max}		Size	mm^2	
	A	A	A	kW (hp)	A	Article No.			Article No.
1FW6050-0.B03-0F..	5	4.8	7.6	4.23 (5.67)	5/15	**6SL3120-■TE15-0AD.**	1	4 × 2.5	**6FX8002-5CS16-....**
1FW6050-0.B05-0F..	5.1	4.9	7.6	4.59 (6.16)	5/15	**6SL3120-■TE15-0AD.**	1	4 × 2.5	**6FX8002-5CS16-....**
1FW6050-0.B07-0F..	5.1	5.2	7.6	4.85 (6.50)	5/15	**6SL3120-■TE15-0AD.**	1	4 × 2.5	**6FX8002-5CS16-....**
1FW6050-0.B07-0K..	9.3	9	14	8.79 (11.8)	9/27	**6SL3120-■TE21-0AD.**	1	4 × 2.5	**6FX8002-5CS16-....**
1FW6050-0.B10-0K..	9.3	9.1	14	9.16 (12.3)	9/27	**6SL3120-■TE21-0AD.**	1	4 × 2.5	**6FX8002-5CS16-....**
1FW6050-0.B15-0K..	9.3	9.2	14	9.74 (13.1)	9/27	**6SL3120-■TE21-0AD.**	1	4 × 2.5	**6FX8002-5CS16-....**
1FW6050-0.B15-1J..	18	18	29	17.5 (23.5)	18/36	**6SL3120-■TE21-8AC.**	1	4 × 2.5	**6FX8002-5CS16-....**
1FW6060-0.B03-0F..	4.5	4.3	9.8	5.91 (7.93)	5/15	**6SL3120-■TE15-0AD.**	1	4 × 2.5	**6FX8002-5CS16-....**
1FW6060-0.B05-0F..	4.5	4.4	9.8	6.65 (8.92)	5/15	**6SL3120-■TE15-0AD.**	1	4 × 2.5	**6FX8002-5CS16-....**
1FW6060-0.B05-0K..	8.1	7.7	17	10.2 (13.7)	9/27	**6SL3120-■TE21-0AD.**	1	4 × 2.5	**6FX8002-5CS16-....**
1FW6060-0.B07-0F..	4.5	4.4	9.8	7.06 (9.47)	5/15	**6SL3120-■TE15-0AD.**	1	4 × 2.5	**6FX8002-5CS16-....**
1FW6060-0.B07-0K..	8.1	7.9	17	10.8 (14.5)	9/27	**6SL3120-■TE21-0AD.**	1	4 × 2.5	**6FX8002-5CS16-....**
1FW6060-0.B10-0K..	8.1	7.9	17	11.8 (15.8)	9/27	**6SL3120-■TE21-0AD.**	1	4 × 2.5	**6FX8002-5CS16-....**
1FW6060-0.B10-1J..	15	14	31	19.1 (25.6)	18/36	**6SL3120-■TE21-8AC.**	1	4 × 2.5	**6FX8002-5CS16-....**
1FW6060-0.B15-0K..	8.1	8	17	12.9 (17.3)	9/27	**6SL3120-■TE21-0AD.**	1	4 × 2.5	**6FX8002-5CS16-....**
1FW6060-0.B15-1J..	15	14	31	20.3 (27.2)	18/36	**6SL3120-■TE21-8AC.**	1	4 × 2.5	**6FX8002-5CS16-....**

Motor Module:	
Single Motor Module	**1**
Double Motor Module	**2**
Version status	

Length codes	**....**

For information on the cables, refer to MOTION-CONNECT connection systems

10

[1] Torque and current at low speeds.
[2] The values refer to a supply voltage of 400 V 3 AC ±10 % (drive system DC link voltage 600 V DC).
[3] In case of water cooling with inlet temperature of 35 °C (95 °F) and maximum rotor flange temperature of 60 °C (140 °F).
[4] For type of connection with exposed core ends, power and signal connectors are not included in the scope of supply of the motor and must be ordered separately.
[5] Optimized selection for full performance of torque motors.
[6] The current carrying capacity of the power cables complies with EN 60204-1 for installation type C, for continuous duty at an ambient air temperature of 40 °C (104 °F).

© Siemens AG 2017

Selection and ordering data

Maximum torque	Static torque 1) 3)	Rated torque 2) 3)	Speed at maximum torque, max. 2)	Rated speed 2)	**SIMOTICS T-1FW6 built-in torque motor**	Moment of inertia Rotor	Weight, approx. Stator + rotor
M_{max}	M_0	M_{rated}	n_{max} at M_{max}	n_{rated}		J	m
Nm (lb_f-ft)	Nm (lb_f-ft)	Nm (lb_f-ft)	rpm	rpm	Article No.	10^{-2}kgm^2 (10^{-3} x lb_f-in-s^2)	kg (lb)
Water cooling							
179 (132)	119 (87.8)	113 (83.3)	50.2	142	**1FW6090-0■B05-0F■2**	1.52 (1.35)	9.2 (20.3)
		109 (80.4)	142	250	**1FW6090-0■B05-0K■2**		
251 (185)	166 (122)	154 (114)	128	224	**1FW6090-0■B07-0K■2**	2.2 (1.95)	12.2 (26.9)
		142 (105)	278	428	**1FW6090-0■B07-1J■2**		
358 (264)	238 (176)	231 (170)	12.4	83.9	**1FW6090-0■B10-0K■2**	3.09 (2.73)	17.2 (37.9)
		216 (159)	170	272	**1FW6090-0■B10-1J■2**		
537 (396)	357 (263)	338 (249)	80.6	154	**1FW6090-0■B15-1J■2**	4.65 (4.12)	27.2 (60.0)
		319 (235)	202	312	**1FW6090-0■B15-2J■2**		
439 (324)	258 (190)	241 (178)	46.5	132	**1FW6130-0■B05-0K■2**	6.37 (5.64)	13.2 (29.1)
		217 (160)	181	308	**1FW6130-0■B05-1J■2**		
614 (453)	361 (266)	344 (254)	21.5	96.1	**1FW6130-0■B07-0K■2**	8.92 (7.90)	18.2 (40.1)
		324 (239)	109	201	**1FW6130-0■B07-1J■2**		
878 (648)	516 (381)	484 (357)	50.9	123	**1FW6130-0■B10-1J■2**	12.7 (11.24)	25.2 (55.6)
		449 (331)	148	249	**1FW6130-0■B10-2J■2**		
1320 (974)	775 (572)	743 (548)	16	78.4	**1FW6130-0■B15-1J■2**	19.1 (16.91)	38.2 (84.2)
		714 (527)	78.8	152	**1FW6130-0■B15-2J■2**		
710 (524)	360 (266)	338 (249)	108	234	**1FW6150-0■B05-1J■2**	10.1 (8.94)	21.7 (47.8)
		298 (220)	332	654	**1FW6150-0■B05-4F■2**		
994 (733)	504 (372)	470 (347)	126	259	**1FW6150-0■B07-2J■2**	14.2 (12.57)	33.5 (73.9)
		444 (327)	230	449	**1FW6150-0■B07-4F■2**		
1420 (1047)	720 (531)	688 (507)	75.9	171	**1FW6150-0■B10-2J■2**	20.9 (18.5)	47.5 (105)
		663 (489)	152	301	**1FW6150-0■B10-4F■2**		
2130 (1571)	1080 (797)	1050 (774)	33.1	103	**1FW6150-0■B15-2J■2**	31.3 (27.7)	70.8 (156)
		1030 (760)	89.1	188	**1FW6150-0■B15-4F■2**		

Cable outlet only for 1FW6090/1FW6130/1FW6150:	
Axial	**P**
Radially outwards	**Q**
Tangential	**N**
Type of connection:	
Permanently connected power and signal cables with exposed core ends 4) Length: 2 m (6.56 ft)	**C**
Permanently connected power and signal cables pre-assembled with connectors Length: 0.5 m (1.64 ft)	**D**

For footnotes, see next page.

© Siemens AG 2017

Motor type (repeated)	Stall current 1) 3)	Rated current 2) 3)	Maximum current 2)	Calculated power	**SINAMICS S120 Motor Module 5)** Required rated current	**in booksize format** Internal air cooling For further components see SINAMICS S120 drive system	**Power cable with complete shield** Motor connection via power connector 4) Power con-nector	Cable cross-section 6)	Pre-assembled basic cable to drive system
	I_0	I_{rated}	I_{max}	$P_{el, max}$	I_{rated} / I_{max}		Size	mm^2	
	A	A	A	kW (hp)	A	Article No.			Article No.
1FW6090-0.B05-0F..	5.9	5.6	9.5	6.66 (8.93)	5/15	**6SL3120-■TE15-0AD.**	1	4 × 2.5	**6FX8002-5CS16-....**
1FW6090-0.B05-0K..	8.2	7.5	13	8.23 (11.0)	9/27	**6SL3120-■TE21-0AD.**	1	4 × 2.5	**6FX8002-5CS16-....**
1FW6090-0.B07-0K..	10	9.5	16	10.4 (13.9)	18/36	**6SL3120-■TE21-8AC.**	1	4 × 2.5	**6FX8002-5CS16-....**
1FW6090-0.B07-1J..	16	14	26	14.3 (19.2)	18/36	**6SL3120-■TE21-8AC.**	1	4 × 2.5	**6FX8002-5CS16-....**
1FW6090-0.B10-0K..	8.2	8.0	13	9.64 (12.9)	9/27	**6SL3120-■TE21-0AD.**	1	4 × 2.5	**6FX8002-5CS16-....**
1FW6090-0.B10-1J..	16	15	27	15.5 (20.8)	18/36	**6SL3120-■TE21-8AC.**	1	4 × 2.5	**6FX8002-5CS16-....**
1FW6090-0.B15-1J..	16	15	27	17.3 (23.2)	18/36	**6SL3120-■TE21-8AC.**	1	4 × 2.5	**6FX8002-5CS16-....**
1FW6090-0.B15-2J..	27	24	43	24.4 (32.7)	30/56	**6SL3120-1TE23-0AC.**	1.5	4 × 4	**6FX8002-5CS46-....**
1FW6130-0.B05-0K..	9.7	9.1	18	12.5 (16.8)	9/27	**6SL3120-■TE21-0AD.**	1	4 × 2.5	**6FX8002-5CS16-....**
1FW6130-0.B05-1J..	17	14	32	18.7 (25.1)	18/36	**6SL3120-■TE21-8AC.**	1	4 × 2.5	**6FX8002-5CS16-....**
1FW6130-0.B07-0K..	11	10	20	14.5 (19.4)	18/36	**6SL3120-■TE21-8AC.**	1	4 × 2.5	**6FX8002-5CS16-....**
1FW6130-0.B07-1J..	17	15	32	20.1 (27.0)	18/36	**6SL3120-■TE21-8AC.**	1	4 × 2.5	**6FX8002-5CS16-....**
1FW6130-0.B10-1J..	17	16	32	21.8 (29.2)	18/36	**6SL3120-■TE21-8AC.**	1	4 × 2.5	**6FX8002-5CS16-....**
1FW6130-0.B10-2J..	28	25	53	31.2 (41.8)	30/56	**6SL3120-1TE23-0AC.**	1.5	4 × 4	**6FX8002-5CS46-....**
1FW6130-0.B15-1J..	19	19	36	25.9 (34.7)	18/36	**6SL3120-■TE21-8AC.**	1	4 × 2.5	**6FX8002-5CS16-....**
1FW6130-0.B15-2J..	28	27	54	34.6 (46.4)	30/56	**6SL3120-1TE23-0AC.**	1.5	4 × 4	**6FX8002-5CS46-....**
1FW6150-0.B05-1J..	18	17	44	23.3 (31.2)	18/54	**6SL3120-■TE21-8AD.**	1	4 × 2.5	**6FX8002-5CS16-....**
1FW6150-0.B05-4F..	44	36	106	39.8 (53.4)	60/113	**6SL3120-1TE26-0AA.**	1.5	4 × 10	**6FX8002-5CS64-....**
1FW6150-0.B07-2J..	28	26	66	32.5 (43.6)	30/90	**6SL3120-■TE23-0AD.**	1.5	4 × 4	**6FX8002-5CS46-....**
1FW6150-0.B07-4F..	44	39	106	43.2 (57.9)	60/113	**6SL3120-1TE26-0AA.**	1.5	4 × 10	**6FX8002-5CS64-....**
1FW6150-0.B10-2J..	28	26	66	36.9 (49.5)	30/90	**6SL3120-■TE23-0AD.**	1.5	4 × 4	**6FX8002-5CS46-....**
1FW6150-0.B10-4F..	44	40	106	47.9 (64.2)	60/113	**6SL3120-1TE26-0AA.**	1.5	4 × 10	**6FX8002-5CS64-....**
1FW6150-0.B15-2J..	28	27	66	43.2 (57.9)	30/90	**6SL3120-■TE23-0AD.**	1.5	4 × 4	**6FX8002-5CS46-....**
1FW6150-0.B15-4F..	44	41	106	55.3 (74.2)	60/113	**6SL3120-1TE26-0AA.**	1.5	4 × 10	**6FX8002-5CS64-....**

Motor Module:	
Single Motor Module	**1**
Double Motor Module	**2**
Version status	

Length codes	**....**

For information on the cables, refer to MOTION-CONNECT connection systems

10

1) Torque and current at low speeds.
2) The values refer to a supply voltage of 400 V 3 AC ±10 % (drive system DC link voltage 600 V DC).
3) In case of water cooling with inlet temperature of 35 °C (95 °F) and maximum rotor flange temperature of 60 °C (140 °F).
4) For type of connection with exposed core ends, power and signal connectors are not included in the scope of supply of the motor and must be ordered separately.
5) Optimized selection for full performance of torque motors.
6) The current carrying capacity of the power cables complies with EN 60204-1 for installation type C, for continuous duty at an ambient air temperature of 40 °C (104 °F).

© Siemens AG 2017

Selection and ordering data

Maximum torque	Static torque [1) 3)]	Rated torque [2) 3)]	Speed at maximum torque, max. [2)]	Rated speed [2)]	**SIMOTICS T-1FW6 built-in torque motor**	Moment of inertia Rotor	Weight, approx. Stator + rotor
M_{max}	M_0	M_{rated}	n_{max} at M_{max}	n_{rated}		J	m
Nm (lb_f-ft)	Nm (lb_f-ft)	Nm (lb_f-ft)	rpm	rpm	Article No.	10^{-2}kgm^2 (10^{-3} x lb_f-in-s^2)	kg (lb)
Water cooling							
716 (528)	467 (344)	432 (319)	80.6	140	**1FW6160-0■B05-1J■2**	19.0 (16.8)	36.3 (80.0)
		405 (299)	142	242	**1FW6160-0■B05-2J■2**		
		317 (234)	308	574	**1FW6160-0■B05-5G■2**		
1000 (738)	653 (482)	621 (458)	51.7	93.5	**1FW6160-0■B07-1J■2**	25.8 (22.8)	48.3 (106)
		596 (440)	97.2	164	**1FW6160-0■B07-2J■2**		
		517 (381)	218	379	**1FW6160-0■B07-5G■2**		
		436 (322)	320	594	**1FW6160-0■B07-8FB2**		
1430 (1055)	933 (688)	904 (667)	28.5	59	**1FW6160-0■B10-1J■2**	36.0 (31.9)	66.3 (146)
		880 (649)	62.4	108	**1FW6160-0■B10-2J■2**		
		807 (595)	149	250	**1FW6160-0■B10-5G■2**		
		737 (544)	221	383	**1FW6160-0■B10-8FB2**		
		629 (464)	317	584	**1FW6160-0■B10-2PB2**		67.4 (149)
2150 (1586)	1400 (1033)	1350 (996)	33.8	64.6	**1FW6160-0■B15-2J■2**	53.1 (47)	95.3 (210)
		1280 (944)	93.8	156	**1FW6160-0■B15-5G■2**		
		1220 (900)	142	237	**1FW6160-0■B15-8FB2**		
		1130 (833)	208	355	**1FW6160-0■B15-2PB2**		96.4 (213)
		970 (715)	304	551	**1FW6160-0■B15-0WB2**		
2860 (2109)	1870 (1379)	1760 (1298)	65.5	111	**1FW6160-0■B20-5G■2**	70.1 (62)	124.3 (274)
		1700 (1254)	103	170	**1FW6160-0■B20-8FB2**		
		1610 (1187)	152	253	**1FW6160-0■B20-2PB2**		125.4 (276)
		1470 (1084)	225	387	**1FW6160-0■B20-0WB2**		

Cable outlet only for 1FW6160 to 1FW6290: Axial Radially outwards Tangential (only for types of connection C and D)	**W** **V** **T**
Type of connection: Permanently connected power and signal cables with exposed core ends [4)] Length: 2 m (6.56 ft) Permanently connected power and signal cables pre-assembled with connectors Length: 0.5 m (1.64 ft)	**C** **D**
Type of connection only for specific motors (not selectable)**:** Permanently connected power and signal cables with exposed core ends [4)] Length: 1 m (3.28 ft)	**B**

For footnotes, see next page.

© Siemens AG 2017

Motor type (repeated)	Stall current [1] [3]	Rated current [2] [3]	Maximum current [2]	Calculated power	**SINAMICS S120 Motor Module [5]** Required rated current	**in booksize format** Internal air cooling For further components see SINAMICS S120 drive system	**Power cable with complete shield** Motor connection via power connector [4] Power connector	Cable cross-section [6]	Pre-assembled basic cable to drive system
	I_0	I_{rated}	I_{max}	$P_{el, max}$	I_{rated} / I_{max}	Article No.	Size	mm^2	Article No.
1FW6160-0.B05-1J..	18	16	32	15.2 (20.4)	18/36	**6SL3120 - ■TE21-8AC.**	1	4 × 2.5	**6FX8002-5CS16-....**
1FW6160-0.B05-2J..	28	24	49	19.8 (26.6)	30/56	**6SL3120 - 1 TE23-0AC.**	1.5	4 × 4	**6FX8002-5CS46-....**
1FW6160-0.B05-5G..	56	37	99	32.4 (43.4)	60/113	**6SL3120 - 1 TE26-0AA.**	1.5	4 × 16	**6FX8002-5CS24-....**
1FW6160-0.B07-1J..	18	17	32	16.9 (22.7)	18/36	**6SL3120 - ■TE21-8AC.**	1	4 × 2.5	**6FX8002-5CS16-....**
1FW6160-0.B07-2J..	28	25	49	21.7 (29.1)	30/56	**6SL3120 - 1 TE23-0AC.**	1.5	4 × 4	**6FX8002-5CS46-....**
1FW6160-0.B07-5G..	56	44	99	34.5 (46.3)	60/113	**6SL3120 - 1 TE26-0AA.**	1.5	4 × 16	**6FX8002-5CS24-....**
1FW6160-0.B07-8FB.	80	52	141	45.5 (61.0)	85/141	**6SL3120 - 1 TE28-5AA.**	–	–	**–**
1FW6160-0.B10-1J..	18	17	32	19.2 (25.7)	18/36	**6SL3120 - ■TE21-8AC.**	1	4 × 2.5	**6FX8002-5CS16-....**
1FW6160-0.B10-2J..	28	26	49	24.4 (32.7)	30/56	**6SL3120 - 1 TE23-0AC.**	1.5	4 × 4	**6FX8002-5CS46-....**
1FW6160-0.B10-5G..	56	48	99	37.5 (50.3)	60/113	**6SL3120 - 1 TE26-0AA.**	1.5	4 × 16	**6FX8002-5CS24-....**
1FW6160-0.B10-8FB.	80	62	141	48.6 (65.2)	85/141	**6SL3120 - 1 TE28-5AA.**	–	–	**–**
1FW6160-0.B10-2PB.	112	74	198	62.8 (84.2)	132/210	**6SL3120 - 1 TE31-3AA.**	–	–	**–**
1FW6160-0.B15-2J..	28	27	49	28.4 (38.1)	30/56	**6SL3120 - 1 TE23-0AC.**	1.5	4 × 4	**6FX8002-5CS46-....**
1FW6160-0.B15-5G..	56	51	99	42.1 (56.5)	60/113	**6SL3120 - 1 TE26-0AA.**	1.5	4 × 16	**6FX8002-5CS24-....**
1FW6160-0.B15-8FB.	80	69	141	53.6 (71.9)	85/141	**6SL3120 - 1 TE28-5AA.**	–	–	**–**
1FW6160-0.B15-2PB.	112	89	198	67.8 (90.9)	132/210	**6SL3120 - 1 TE31-3AA.**	–	–	**–**
1FW6160-0.B15-0WB.	160	109	282	89.9 (121)	200/282	**6SL3120 - 1 TE32-0AA.**	–	–	**–**
1FW6160-0.B20-5G..	56	52	99	46.6 (62.5)	60/113	**6SL3120 - 1 TE26-0AA.**	1.5	4 × 16	**6FX8002-5CS24-....**
1FW6160-0.B20-8FB.	80	72	141	58.4 (78.3)	85/141	**6SL3120 - 1 TE28-5AA.**	–	–	**–**
1FW6160-0.B20-2PB.	112	96	198	72.6 (97.4)	132/210	**6SL3120 - 1 TE31-3AA.**	–	–	**–**
1FW6160-0.B20-0WB.	160	124	282	95 (127)	200/282	**6SL3120 - 1 TE32-0AA.**	–	–	**–**

Motor Module:	
Single Motor Module	**1**
Double Motor Module	**2**
Version status	

Length codes	**....**

For information on the cables, refer to MOTION-CONNECT connection systems

10

[1] Torque and current at low speeds.
[2] The values refer to a supply voltage of 400 V 3 AC ±10 % (drive system DC link voltage 600 V DC).
[3] In case of water cooling with inlet temperature of 35 °C (95 °F) and maximum rotor flange temperature of 60 °C (140 °F).
[4] For type of connection with exposed core ends, power and signal connectors are not included in the scope of supply of the motor and must be ordered separately.
[5] Optimized selection for full performance of torque motors.
[6] The current carrying capacity of the power cables complies with EN 60204-1 for installation type C, for continuous duty at an ambient air temperature of 40 °C (104 °F).

© Siemens AG 2017

Selection and ordering data

Maximum torque M_{max} Nm (lb_f-ft)	Static torque [1) 3)] M_0 Nm (lb_f-ft)	Rated torque [2) 3)] M_{rated} Nm (lb_f-ft)	Speed at maximum torque, max. [2)] n_{max} at M_{max} rpm	Rated speed [2)] n_{rated} rpm	**SIMOTICS T-1FW6 built-in torque motor** Article No.	Moment of inertia Rotor J 10^{-2}kgm^2 (10^{-3} x lb_f-in-s^2)	Weight, approx. Stator + rotor m kg (lb)
Water cooling							
990 (730)	672 (496)	634 (468)	51.7	92.7	**1FW6190-0■B05-1J■2**	35.8 (31.7)	42.8 (94.4)
		608 (448)	91	155	**1FW6190-0■B05-2J■2**		
		516 (381)	204	364	**1FW6190-0■B05-5G■2**		
1390 (1025)	941 (694)	907 (669)	31.2	61	**1FW6190-0■B07-1J■2**	48.6 (43)	55.8 (123)
		881 (650)	60.8	105	**1FW6190-0■B07-2J■2**		
		798 (589)	143	244	**1FW6190-0■B07-5G■2**		
		714 (527)	212	377	**1FW6190-0■B07-8FB2**		
1980 (1460)	1340 (988)	1310 (966)	14.2	37.2	**1FW6190-0■B10-1J■2**	67.8 (60)	75.8 (167)
		1290 (951)	37.1	67.6	**1FW6190-0■B10-2J■2**		
		1210 (892)	96.6	161	**1FW6190-0■B10-5G■2**		
		1140 (841)	145	246	**1FW6190-0■B10-8FB2**		
		971 (716)	238	431	**1FW6190-0■B10-2PB2**		77.1 (170)
2970 (2191)	2020 (1490)	1970 (1453)	16.9	39	**1FW6190-0■B15-2J■2**	99.8 (88.3)	107.8 (238)
		1890 (1394)	59.4	99.8	**1FW6190-0■B15-5G■2**		
		1830 (1350)	92.3	153	**1FW6190-0■B15-8FB2**		
		1680 (1239)	155	263	**1FW6190-0■B15-2PB2**		109.1 (241)
		1560 (1151)	201	352	**1FW6190-0■B15-0WB2**		
3960 (2921)	2690 (1984)	2580 (1903)	40.1	70.1	**1FW6190-0■B20-5G■2**	132.0 (116.8)	136.2 (300)
		2510 (1851)	65.4	109	**1FW6190-0■B20-8FB2**		
		2380 (1755)	113	188	**1FW6190-0■B20-2PB2**		137.5 (303)
		2270 (1674)	148	249	**1FW6190-0■B20-0WB2**		

Cable outlet only for 1FW6160 to 1FW6290: Axial Radially outwards Tangential (only for types of connection C and D)	**W** **V** **T**
Type of connection: Permanently connected power and signal cables with exposed core ends [4)] Length: 2 m (6.56 ft) Permanently connected power and signal cables pre-assembled with connectors Length: 0.5 m (1.64 ft)	**C** **D**
Type of connection only for specific motors (not selectable)**:** Permanently connected power and signal cables with exposed core ends [4)] Length: 1 m (3.28 ft)	**B**

For footnotes, see next page.

© Siemens AG 2017

Motor type (repeated)	Stall current 1) 3)	Rated current 2) 3)	Maximum current 2)	Calculated power	**SINAMICS S120 Motor Module 5)** Required rated current	**in booksize format** Internal air cooling For further components see SINAMICS S120 drive system	**Power cable with complete shield** Motor connection via power connector 4) Power con-nector	Cable cross-section 6)	Pre-assembled basic cable to drive system
	I_0	I_{rated}	I_{max}	$P_{el, max}$	I_{rated} / I_{max}		Size	mm^2	
	A	A	A	kW (hp)	A	Article No.			Article No.
1FW6190-0.B05-1J..	18	17	32	16.4 (22.0)	18/36	**6SL3120 - ■TE21-8AC.**	1	4 × 2.5	**6FX8002-5CS16-....**
1FW6190-0.B05-2J..	27	24	48	20.5 (27.5)	30/56	**6SL3120 - 1 TE23-0AC.**	1.5	4 × 4	**6FX8002-5CS46-....**
1FW6190-0.B05-5G..	55	41	95	32.2 (43.2)	60/113	**6SL3120 - 1 TE26-0AA.**	1.5	4 × 16	**6FX8002-5CS24-....**
1FW6190-0.B07-1J..	18	17	32	18.4 (24.7)	18/36	**6SL3120 - ■TE21-8AC.**	1	4 × 2.5	**6FX8002-5CS16-....**
1FW6190-0.B07-2J..	27	25	48	22.7 (30.4)	30/56	**6SL3120 - 1 TE23-0AC.**	1.5	4 × 4	**6FX8002-5CS46-....**
1FW6190-0.B07-5G..	55	45	95	34.6 (46.4)	60/113	**6SL3120 - 1 TE26-0AA.**	1.5	4 × 16	**6FX8002-5CS24-....**
1FW6190-0.B07-8FB.	78	57	136	45 (60.3)	85/141	**6SL3120 - 1 TE28-5AA.**	–	–	**–**
1FW6190-0.B10-1J..	18	18	32	21 (28.2)	18/36	**6SL3120 - ■TE21-8AC.**	1	4 × 2.5	**6FX8002-5CS16-....**
1FW6190-0.B10-2J..	27	26	48	25.8 (34.6)	30/56	**6SL3120 - 1 TE23-0AC.**	1.5	4 × 4	**6FX8002-5CS46-....**
1FW6190-0.B10-5G..	55	48	95	38.1 (51.1)	60/113	**6SL3120 - 1 TE26-0AA.**	1.5	4 × 16	**6FX8002-5CS24-....**
1FW6190-0.B10-8FB.	78	65	136	48.7 (65.3)	85/141	**6SL3120 - 1 TE28-5AA.**	–	–	**–**
1FW6190-0.B10-2PB.	123	86	214	67.7 (90.8)	132/210	**6SL3120 - 1 TE31-3AA.**	–	–	**–**
1FW6190-0.B15-2J..	27	26	48	30.4 (40.8)	30/56	**6SL3120 - 1 TE23-0AC.**	1.5	4 × 4	**6FX8002-5CS46-....**
1FW6190-0.B15-5G..	55	51	95	43.6 (58.5)	60/113	**6SL3120 - 1 TE26-0AA.**	1.5	4 × 16	**6FX8002-5CS24-....**
1FW6190-0.B15-8FB.	78	70	136	54.6 (73.2)	85/141	**6SL3120 - 1 TE28-5AA.**	–	–	**–**
1FW6190-0.B15-2PB.	123	100	214	73.7 (98.8)	132/210	**6SL3120 - 1 TE31-3AA.**	–	–	**–**
1FW6190-0.B15-0WB.	156	118	272	88.5 (119)	200/282	**6SL3120 - 1 TE32-0AA.**	–	–	**–**
1FW6190-0.B20-5G..	55	52	95	48.8 (65.4)	60/113	**6SL3120 - 1 TE26-0AA.**	1.5	4 × 16	**6FX8002-5CS24-....**
1FW6190-0.B20-8FB.	78	72	136	60.3 (80.9)	85/141	**6SL3120 - 1 TE28-5AA.**	–	–	**–**
1FW6190-0.B20-2PB.	123	107	214	79.5 (107)	132/210	**6SL3120 - 1 TE31-3AA.**	–	–	**–**
1FW6190-0.B20-0WB.	156	129	272	94.6 (127)	200/282	**6SL3120 - 1 TE32-0AA.**	–	–	**–**

Motor Module:	
Single Motor Module	**1**
Double Motor Module	**2**
Version status	

Length codes	**....**

For information on the cables, refer to MOTION-CONNECT connection systems

10

1) Torque and current at low speeds.
2) The values refer to a supply voltage of 400 V 3 AC ±10 % (drive system DC link voltage 600 V DC).
3) In case of water cooling with inlet temperature of 35 °C (95 °F) and maximum rotor flange temperature of 60 °C (140 °F).
4) For type of connection with exposed core ends, power and signal connectors are not included in the scope of supply of the motor and must be ordered separately.
5) Optimized selection for full performance of torque motors.
6) The current carrying capacity of the power cables complies with EN 60204-1 for installation type C, for continuous duty at an ambient air temperature of 40 °C (104 °F).

© Siemens AG 2017

Selection and ordering data

Maximum torque	Static torque 1) 3)	Rated torque 2) 3)	Speed at maximum torque, max. 2)	Rated speed 2)	**SIMOTICS T-1FW6 built-in torque motor**	Moment of inertia Rotor	Weight, approx. Stator + rotor
M_{max}	M_0	M_{rated}	n_{max} at M_{max}	n_{rated}		J	m
Nm (lb_f-ft)	Nm (lb_f-ft)	Nm (lb_f-ft)	rpm	rpm	Article No.	10^{-2}kgm^2 (10^{-3} x lb_f-in-s^2)	kg (lb)
Water cooling							
1320 (974)	841 (620)	801 (591)	32.6	66.1	**1FW6230-0■B05-1J■2**	62.2 (55)	44.8 (98.8)
		778 (574)	56	104	**1FW6230-0■B05-2J■2**		
		669 (493)	147	275	**1FW6230-0■B05-5G■2**		
1840 (1357)	1180 (870)	1140 (841)	18	43.2	**1FW6230-0■B07-1J■2**	84.3 (74.6)	58.8 (130)
		1120 (826)	35.9	69.8	**1FW6230-0■B07-2J■2**		
		1020 (752)	103	185	**1FW6230-0■B07-5G■2**		
		936 (690)	148	275	**1FW6230-0■B07-8FB2**		
2630 (1940)	1680 (1239)	1630 (1202)	19.8	44.4	**1FW6230-0■B10-2J■2**	118.0 (104)	81.8 (180)
		1530 (1128)	69.3	123	**1FW6230-0■B10-5G■2**		
		1460 (1077)	101	181	**1FW6230-0■B10-8FB2**		
		1330 (981)	150	278	**1FW6230-0■B10-2PB2**		
3950 (2914)	2520 (1859)	2450 (1807)	18.5	41.5	**1FW6230-0■B15-4C■2**	173.0 (153)	117.8 (260)
		2380 (1755)	41.8	76.2	**1FW6230-0■B15-5G■2**		
		2320 (1711)	64	113	**1FW6230-0■B15-8FB2**		
		2210 (1630)	97.1	172	**1FW6230-0■B15-2PB2**		
		2040 (1505)	141	258	**1FW6230-0■B15-0WB2**		119.4 (263)
5260 (3880)	3360 (2478)	3230 (2382)	27.5	53.4	**1FW6230-0■B20-5G■2**	228.0 (202)	153.8 (339)
		3170 (2338)	44.8	80.7	**1FW6230-0■B20-8FB2**		
		3060 (2257)	70	123	**1FW6230-0■B20-2PB2**		
		2910 (2146)	104	184	**1FW6230-0■B20-0WB2**		155.4 (343)

Cable outlet only for 1FW6160 to 1FW6290: Axial Radially outwards Tangential (only for types of connection C and D)	**W** **V** **T**
Type of connection: Permanently connected power and signal cables with exposed core ends 4) Length: 2 m (6.56 ft) Permanently connected power and signal cables pre-assembled with connectors Length: 0.5 m (1.64 ft)	**C** **D**
Type of connection only for specific motors (not selectable)**:** Permanently connected power and signal cables with exposed core ends 4) Length: 1 m (3.28 ft)	**B**

For footnotes, see next page.

© Siemens AG 2017

Motor type (repeated)	Stall current 1) 3)	Rated current 2) 3)	Maximum current 2)	Calculated power	**SINAMICS S120 Motor Module 5)** Required rated current	**in booksize format** Internal air cooling For further components see SINAMICS S120 drive system	**Power cable with complete shield** Motor connection via power connector 4) Power con-nector	Cable cross-section 6)	Pre-assembled basic cable to drive system
	I_0	I_{rated}	I_{max}	$P_{el, max}$	I_{rated} / I_{max}	Article No.	Size	mm^2	Article No.
1FW6230-0.B05-1J..	17	16	32	17.4 (23.3)	18/36	**6SL3120 - ■TE21-8AC.**	1	4 × 2.5	**6FX8002-5CS16-....**
1FW6230-0.B05-2J..	24	22	45	21.1 (28.3)	30/56	**6SL3120 - 1 TE23-0AC.**	1.5	4 × 4	**6FX8002-5CS46-....**
1FW6230-0.B05-5G..	53	41	101	33.1 (44.4)	60/113	**6SL3120 - 1 TE26-0AA.**	1.5	4 × 16	**6FX8002-5CS24-....**
1FW6230-0.B07-1J..	17	16	32	19.7 (26.4)	18/36	**6SL3120 - ■TE21-8AC.**	1	4 × 2.5	**6FX8002-5CS16-....**
1FW6230-0.B07-2J..	24	23	45	23.7 (31.8)	30/56	**6SL3120 - 1 TE23-0AC.**	1.5	4 × 4	**6FX8002-5CS46-....**
1FW6230-0.B07-5G..	53	45	101	36.3 (48.7)	60/113	**6SL3120 - 1 TE26-0AA.**	1.5	4 × 16	**6FX8002-5CS24-....**
1FW6230-0.B07-8FB.	74	57	139	45.1 (60.5)	85/141	**6SL3120 - 1 TE28-5AA.**	–	–	**–**
1FW6230-0.B10-2J..	24	23	45	27.3 (36.6)	30/56	**6SL3120 - 1 TE23-0AC.**	1.5	4 × 4	**6FX8002-5CS46-....**
1FW6230-0.B10-5G..	53	48	101	40.5 (54.3)	60/113	**6SL3120 - 1 TE26-0AA.**	1.5	4 × 16	**6FX8002-5CS24-....**
1FW6230-0.B10-8FB.	74	63	139	49.5 (66.4)	85/141	**6SL3120 - 1 TE28-5AA.**	–	–	**–**
1FW6230-0.B10-2PB.	106	81	199	63.5 (85.2)	132/210	**6SL3120 - 1 TE31-3AA.**	–	–	**–**
1FW6230-0.B15-4C..	34	33	64	38.3 (51.4)	45/85	**6SL3120 - 1 TE24-5AA.**	1.5	4 × 6	**6FX8002-5CS54-....**
1FW6230-0.B15-5G..	53	50	101	47.1 (63.2)	60/113	**6SL3120 - 1 TE26-0AA.**	1.5	4 × 16	**6FX8002-5CS24-....**
1FW6230-0.B15-8FB.	74	67	139	56.4 (75.6)	85/141	**6SL3120 - 1 TE28-5AA.**	–	–	**–**
1FW6230-0.B15-2PB.	106	91	199	70.8 (94.9)	132/210	**6SL3120 - 1 TE31-3AA.**	–	–	**–**
1FW6230-0.B15-0WB.	148	117	279	88.3 (118)	200/282	**6SL3120 - 1 TE32-0AA.**	–	–	**–**
1FW6230-0.B20-5G..	53	51	101	53.3 (71.5)	60/113	**6SL3120 - 1 TE26-0AA.**	1.5	4 × 16	**6FX8002-5CS24-....**
1FW6230-0.B20-8FB.	74	69	139	63 (84.5)	85/141	**6SL3120 - 1 TE28-5AA.**	–	–	**–**
1FW6230-0.B20-2PB.	106	95	199	77.9 (104)	132/210	**6SL3120 - 1 TE31-3AA.**	–	–	**–**
1FW6230-0.B20-0WB.	148	126	279	95.5 (128)	200/282	**6SL3120 - 1 TE32-0AA.**	–	–	**–**

Motor Module:	
Single Motor Module	**1**
Double Motor Module	**2**
Version status	

Length codes	**....**

For information on the cables, refer to MOTION-CONNECT connection systems

10

1) Torque and current at low speeds.
2) The values refer to a supply voltage of 400 V 3 AC ±10 % (drive system DC link voltage 600 V DC).
3) In case of water cooling with inlet temperature of 35 °C (95 °F) and maximum rotor flange temperature of 60 °C (140 °F).
4) For type of connection with exposed core ends, power and signal connectors are not included in the scope of supply of the motor and must be ordered separately.
5) Optimized selection for full performance of torque motors.
6) The current carrying capacity of the power cables complies with EN 60204-1 for installation type C, for continuous duty at an ambient air temperature of 40 °C (104 °F).

© Siemens AG 2017

Selection and ordering data

Maximum torque	Static torque 1) 3)	Rated torque 2) 3)	Speed at maximum torque, max. 2)	Rated speed 2)	**SIMOTICS T-1FW6 built-in torque motor**	Moment of inertia Rotor	Weight, approx. Stator + rotor
M_{max}	M_0	M_{rated}	n_{max} at M_{max}	n_{rated}		J	m
Nm (lb_f-ft)	Nm (lb_f-ft)	Nm (lb_f-ft)	rpm	rpm	Article No.	10^{-2}kgm^2 (10^{-3} x lb_f-in-s^2)	kg (lb)
Water cooling							
4000 (2950)	2220 (1637)	2060 (1519)	57.5	106	**1FW6290-0■B07-5G■2**	228 (202)	103.6 (228)
		1920 (1416)	110	204	**1FW6290-0■B07-0L B2**		
		1810 (1335)	144	272	**1FW6290-0■B07-2P B2**		108.8 (240)
6280 (4632)	3490 (2574)	3320 (2449)	39.3	72.9	**1FW6290-0■B11-7A■2**	334 (296)	159 (351)
		3200 (2360)	68.6	125	**1FW6290-0■B11-0L B2**		
		3110 (2294)	90.4	165	**1FW6290-0■B11-2P B2**		164.2 (362)
8570 (6321)	4760 (3511)	4600 (3393)	26.6	51.3	**1FW6290-0■B15-7A■2**	440 (389)	214.6 (473)
		4480 (3304)	48.7	88.5	**1FW6290-0■B15-0L B2**		
		4390 (3238)	64.9	117	**1FW6290-0■B15-2P B2**		219.8 (485)
10900 (8039)	6030 (4447)	5760 (4248)	36.9	67.9	**1FW6290-0■B20-0L B2**	546 (483)	260.6 (575)
		5670 (4182)	49.9	90.3	**1FW6290-0■B20-2P B2**		265.8 (586)

Cable outlet only for 1FW6160 to 1FW6290: Axial Radially outwards Tangential (only for types of connection C and D)	**W** **V** **T**
Type of connection: Permanently connected power and signal cables with exposed core ends 4) Length: 2 m (6.56 ft) Permanently connected power and signal cables pre-assembled with connectors Length: 0.5 m (1.64 ft)	**C** **D**
Type of connection only for specific motors (not selectable)**:** Permanently connected power and signal cables with exposed core ends 4) Length: 1 m (3.28 ft)	**B**

For footnotes, see next page.

© Siemens AG 2017

Motor type (repeated)	Stall current [1] [3]	Rated current [2] [3]	Maximum current [2]	Calculated power	**SINAMICS S120 Motor Module [5]** Required rated current	**in booksize format** Internal air cooling For further components see SINAMICS S120 drive system	**Power cable with complete shield** Motor connection via power connector [4] Power connector	Cable cross-section [6]	Pre-assembled basic cable to drive system
	I_0	I_{rated}	I_{max}	$P_{el, max}$	I_{rated} / I_{max}		Size	mm^2	
	A	A	A	kW (hp)	A	Article No.			Article No.
1FW6290-0.B07-5G..	56	52	119	46.9 (62.9)	60/113	**6SL3120-1TE26-0AA.**	1.5	4 × 16	**6FX8002-5CS24-....**
1FW6290-0.B07-0LB.	101	86	212	68.9 (92.4)	132/210	**6SL3120-1TE31-3AA.**	–	–	**–**
1FW6290-0.B07-2PB.	129	105	272	83.2 (112)	200/282	**6SL3120-1TE32-0AA.**	–	–	**–**
1FW6290-0.B11-7A..	63	60	133	57.3 (76.8)	85/141	**6SL3120-1TE28-5AA.**	1.5	4 × 16	**6FX8002-5CS24-....**
1FW6290-0.B11-0LB.	101	92	212	76.6 (103)	132/210	**6SL3120-1TE31-3AA.**	–	–	**–**
1FW6290-0.B11-2PB.	129	114	272	91.2 (122)	200/282	**6SL3120-1TE32-0AA.**	–	–	**–**
1FW6290-0.B15-7A..	63	61	133	64 (85.8)	85/141	**6SL3120-1TE28-5AA.**	1.5	4 × 16	**6FX8002-5CS24-....**
1FW6290-0.B15-0LB.	101	94	212	83.8 (112)	132/210	**6SL3120-1TE31-3AA.**	–	–	**–**
1FW6290-0.B15-2PB.	129	118	272	98.8 (132)	200/282	**6SL3120-1TE32-0AA.**	–	–	**–**
1FW6290-0.B20-0LB.	101	96	212	90.8 (122)	132/210	**6SL3120-1TE31-3AA.**	–	–	**–**
1FW6290-0.B20-2PB.	129	121	272	106 (142)	200/282	**6SL3120-1TE32-0AA.**	–	–	**–**

Motor Module:	
Single Motor Module	**1**
Double Motor Module	**2**
Version status	

Length codes	**....**

For information on the cables, refer to MOTION-CONNECT connection systems

Accessories

Description	Article No.
Cooling connection adapter	
For SIMOTICS T-1FW6 built-in torque motors	
• 1FW6160 ... 1FW6230	**1FW6160-1BA00-0AA0**
• 1FW6290	**1FW6290-1BA00-0AA0**

Description	Article No.
Power connector [4]	
For SIMOTICS T-1FW6 built-in torque motors	
• Size 1 for 4 × 2.5 mm^2	**6FX2003-0LA00**
• Size 1.5 for 4 × 4/4 × 10/4 × 16 mm^2	**6FX2003-0LA10**
Signal connector [4]	
For SIMOTICS T-1FW6 built-in torque motors	
• M17 (socket) for 6 × 0.5 + 1 × 1.0 mm^2	**6FX2003-0SU07**
Signal cable, pre-assembled [7]	**6FX8002-2SL10-....**
For SIMOTICS T-1FW6 built-in torque motors	

[1] Torque and current at low speeds.
[2] The values refer to a supply voltage of 400 V 3 AC ±10 % (drive system DC link voltage 600 V DC).
[3] In case of water cooling with inlet temperature of 35 °C (95 °F) and maximum rotor flange temperature of 60 °C (140 °F).
[4] For type of connection with exposed core ends, power and signal connectors are not included in the scope of supply of the motor and must be ordered separately.
[5] Optimized selection for full performance of torque motors.
[6] The current carrying capacity of the power cables complies with EN 60204-1 for installation type C, for continuous duty at an ambient air temperature of 40 °C (104 °F).
[7] For length code, see MOTION-CONNECT connection systems.

© Siemens AG 2017

Overview

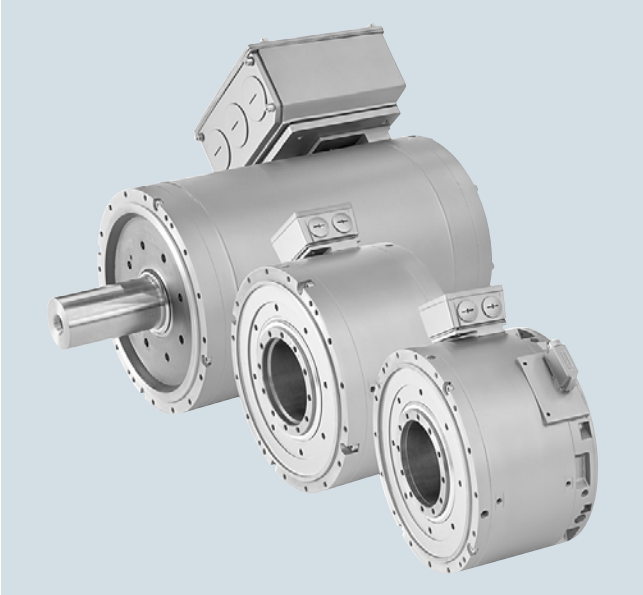

SIMOTICS T-1FW3 complete torque motors

The SIMOTICS T-1FW3 complete torque motors are water-cooled, high-pole (slow running) permanent magnet synchronous motors. The operating characteristics are comparable to those of regular synchronous motors.

The motor spectrum comprises 3 external diameters in various shaft lengths as well as 3 different shaft designs.

- Hollow shaft (not available in the high-speed design 1FW3120)
  - For infeed of cooling and heating media, measurement cables, etc.
  - Motors with various lengths can be connected to the machine shaft
- Plug-on shaft with integrated shaft centering
  - Simple and quick installation as a result of the integrated shaft adapter with centering
  - Optimized clamping element
  - Easy encoder replacement (safety-capability)
  - Longer bearing lifetime
- Solid shaft
  - Simple replacement of a geared motor without having to change the connection to the machine
  - Easy encoder replacement (safety-capability)

The SIMOTICS T-1FW3 compact complete torque motors are flanged onto the machine using the specially-developed stator torque arms. The rotor is coupled to the machine shaft using the clamping element that will be supplied if required. This results in a perfectly rigid drive train that can be optimally controlled.

The SIMOTICS T-1FW3 complete torque motors can be combined with the SINAMICS S120 drive system to create a powerful, high-performance system. The integrated encoder systems for speed and position control can be selected depending on the application.

Benefits

- High torque, compact design, and low construction volume
- Optimized mechatronic solution
  - Highest degree of stiffness
  - High speeds possible
  - Innovative machine concepts are possible
  - Increased productivity and quality
- The right design for every application
  - Large power range
  - Hollow shaft, plug-on shaft, or solid shaft
  - Different encoder types for speed control and high-precision positioning
- Excellent performance
  - Maximum speeds up to 1800 rpm
  - Excellent rotational accuracy
  - High dynamic response, i.e. short ramp-up times
- The ideal motor for energy-saving solutions
- Simple encoder replacement without requiring any readjustment for plug-on and solid shafts

Application

The SIMOTICS T-1FW3 complete torque motors were developed as direct drives. These direct drives form a compact drive unit where the mechanical motor power is transferred directly to the driven machine without any mechanical transmission elements.

- Extruder main drives
- Worm drives for injection molding machines
- Roll drive
- Winder
- Fleece folding machines
- Pull-roll drives for foil drawing machines
- Stretch, calender, casting, and chill rolls
- Dynamic positioning tasks, e.g. rotary tables, clocked conveyor belts
- Replacing hydraulic motors
- Roll drives in paper machines
- Cross-cutter drives for continuous material webs, e.g. paper, textiles, metal sheet
- Wire-drawing machines

More information

The integrated encoder systems for speed and position control can be selected depending on the application. Additional direct measuring systems with integrated DRIVE-CLiQ interface are available from various manufacturers. An up-to-date list of the relevant manufacturers and available measuring systems can be viewed on the Internet at:

http://support.automation.siemens.com/WW/view/en/65402168

© Siemens AG 2017

Technical specifications

Product name	SIMOTICS T-1FW3 complete torque motor
Motor type	Permanent-magnet synchronous motor
Magnet material	Rare-earth magnetic material
Stator winding insulation in accordance with EN 60034-1 (IEC 60034-1)	Temperature class 155 (F) for a winding temperature rise of ΔT = 100 K at a coolant (water) inlet temperature of 30 °C (86.0 °F)
Cooling in accordance with EN 60034-6 (IEC 60034-6)	Water cooling
Thermal motor protection in accordance with EN 60034-11 (IEC 60034-11)	Pt1000 thermistor in the stator winding
Format in accordance with EN 60034-7 (IEC 60034-7)	
• 1FW315/1FW320	IM B14, IM V18, IM V19
• 1FW328	IM B35, IM B34, IM B3, IM B5, IM V1, IM V3, IM V15, IM V35
Degree of protection in accordance with EN 60034-5 (IEC 60034-5)	
• Hollow shaft	IP54
• Plug-on shaft	IP55 (IP54 for 1FW320)
• Solid shaft	IP55 (IP54 for 1FW280)
Shaft extension in accordance with DIN 748-3 (IEC 60072-1)	Hollow shaft, plug-on shaft, solid shaft
Shaft and flange accuracy in accordance with DIN 42955 (IEC 60072-1) [1]	Tolerance N (at "operating temperature" state)
Vibration severity in accordance with EN 60034-14 (IEC 60034-14)	Level A (is maintained up to rated speed)
Sound pressure level L_{pA} (1 m (3,28 ft)) in accordance with EN ISO 1680, max.	73 dB at 4 kHz rated pulse frequency at the rated point
Shock load	Maximum permissible radial acceleration 50 m/s^2 (not in operating state)
Bearings	Roller bearings with life grease lubrication (Bearing replacement interval with regreasing system up to L_{h10} = 60000 h)
Connection	Terminal box for power cable Connector for encoder signals and temperature sensor
Paint finish	Anthracite RAL 7016
2nd rating plate	Enclosed separately
Approvals, in accordance with	cURus

[1] Shaft extension run-out, concentricity of centering ring and shaft, and perpendicularity of mounting flange in relation to shaft extension axis.

© Siemens AG 2017

Selection and ordering data

Rated speed	Shaft height	Rated power	Rated torque	Rated current	Rated voltage	Rated frequency	Operating speed, max. [1]	Speed, max. [2]	**SIMOTICS T-1FW3 complete torque motors Water cooling**
n_{rated}	SH	P_{rated} at ΔT=100 K	M_{rated} at ΔT=100 K	I_{rated} at ΔT=100 K	U_{rated}	f_{rated}	$n_{max, Inv}$	n_{max}	
rpm		kW (hp)	Nm (lb_f-ft)	A	V	Hz	rpm	rpm	Article No.
Line voltage 400 V 3 AC Active Line Module									
150	200	4.7 (6.30)	300 (221)	13	373	35	380	1000	**1FW3201-1■E■2-■D■0**
		7.9 (10.6)	500 (369)	21	350	35	380	1000	**1FW3202-1■E■2-■D■0**
		11.8 (15.8)	750 (553)	30	357	35	370	1000	**1FW3203-1■E■2-■D■0**
		15.7 (21.1)	1000 (738)	40	351	35	360	1000	**1FW3204-1■E■2-■D■0**
		23.6 (31.6)	1500 (1106)	65	331	35	390	1000	**1FW3206-1■E■2-■D■0**
		31.4 (42.1)	2000 (1475)	84	337	35	380	1000	**1FW3208-1■E■2-■D■0**
	280	39.0 (52.3)	2500 (1844)	82	390	25	290	1000	**1FW3281-2■E■3-■D■0**
		55.0 (73.8)	3500 (2581)	115	388	25	290	1000	**1FW3283-2■E■3-■D■0**
		79.0 (106)	5000 (3688)	160	391	25	290	1000	**1FW3285-2■E■3-■D■0**
		110.0 (148)	7000 (5163)	230	382	25	290	1000	**1FW3287-2■E■3-■D■0**
250	280	64.0 (85.8)	2450 (1807)	126	396	41.7	460	1000	**1FW3281-2■G■3-■D■0**
		90.0 (121)	3450 (2545)	176	397	41.7	460	1000	**1FW3283-2■G■3-■D■0**
		130 (174)	4950 (3651)	244	408	41.7	440	1000	**1FW3285-2■G■3-■D■0**
		181 (243)	6900 (5089)	352	393	41.7	460	1000	**1FW3287-2■G■3-■D■0**

Shaft design:	
Hollow shaft	**A**
Plug-on shaft	**S**
Solid shaft without feather key	**M**
Solid shaft with parallel key (half key balanced)	**H**

For information on the shaft designs, see section "Article No. supplements for shaft design"

Further rated speeds on request.

For footnotes, see next page.

© Siemens AG 2017

Motor type (repeated)	Static torque	Stall current	Effi-ciency [3]	Moment of inertia	Weight, approx.	Terminal box	SINAMICS S120 Motor Module	
							Rated output current [4]	Internal air cooling For further components see SINAMICS S120 drive system
	M_0 at ΔT=100 K	I_0 at ΔT=100 K	η	J	m		I_{rated}	
	Nm (lb_f-ft)	A		kgm^2 (lb_f-in-s^2)	kg (lb)	Type	A	Article No.
1FW3201-1.E.2-....	315 (232)	13	0.91	0.22 (1.95)	127 (280)	gk230	18	**6SL3120-1TE21-8AD.**
1FW3202-1.E.2-....	525 (387)	22	0.93	0.36 (3.19)	156 (344)	gk230	30	**6SL3120-1TE23-0AD.**
1FW3203-1.E.2-....	790 (583)	32	0.94	0.49 (4.34)	182 (401)	gk230	45	**6SL3120-1TE24-5AA.**
1FW3204-1.E.2-....	1050 (774)	42	0.94	0.70 (6.2)	225 (496)	gk230	45	**6SL3120-1TE24-5AA.**
1FW3206-1.E.2-....	1575 (1162)	68	0.94	0.97 (8.59)	280 (617)	gk420	85	**6SL3120-1TE28-5AA.**
1FW3208-1.E.2-....	2100 (1549)	88	0.94	1.31 (11.6)	350 (772)	gk420	85	**6SL3120-1TE28-5AA.**
1FW3281-2.E.3-....	2550 (1881)	84	0.94	3.78 (33.5)	600 (1323)	1XB7700	85	**6SL3120-1TE28-5AA.**
1FW3283-2.E.3-....	3550 (2618)	116	0.95	4.64 (41.1)	690 (1521)	1XB7700	132	**6SL3120-1TE31-3AA.**
1FW3285-2.E.3-....	5100 (3762)	163	0.95	5.98 (52.9)	860 (1896)	1XB7700	200	**6SL3120-1TE32-0AA.**
1FW3287-2.E.3-....	7150 (5274)	234	0.96	7.81 (69.1)	1030 (2271)	1XB7700	260	**6SL3320-1TE32-6AA.**
1FW3281-2.G.3-....	2550 (1881)	131	0.95	3.78 (33.5)	600 (1323)	1XB7700	132	**6SL3120-1TE31-3AA.**
1FW3283-2.G.3-....	3550 (2618)	181	0.96	4.64 (41.1)	690 (1521)	1XB7700	200	**6SL3120-1TE32-0AA.**
1FW3285-2.G.3-....	5100 (3762)	251	0.96	5.98 (52.9)	860 (1896)	1XB7700	260	**6SL3320-1TE32-6AA.**
1FW3287-2.G.3-....	7150 (5274)	365	0.96	7.81 (69.1)	1030 (2271)	1XB7700	380	**6SL3320-1TE33-8AA.**

Format:		
Booksize	**1**	
Chassis	**3**	
Motor Module:		
Single Motor Module		**1**
Version status		

10

[1] Maximum permissible operating speed based on the induced voltage in the motor and the voltage strength of the converter (without protective circuit).
[2] Maximum speed that must not be exceeded. Certain constraints may apply, see article number supplements.
[3] Optimum efficiency in continuous duty.
[4] The rated pulse frequencies must be taken into account. The rated motor data is valid for 4 kHz or 2 kHz.

© Siemens AG 2017

Selection and ordering data

Rated speed	Shaft height	Rated power	Rated torque	Rated current	Rated voltage	Rated frequency	Operating speed, max. 1)	Speed, max. 2)	**SIMOTICS T-1FW3 complete torque motors Water cooling**
n_{rated}	SH	P_{rated} at ΔT=100 K	M_{rated} at ΔT=100 K	I_{rated} at ΔT=100 K	U_{rated}	f_{rated}	$n_{max, Inv}$	n_{max}	
rpm		kW (hp)	Nm (lb_f-ft)	A	V	Hz	rpm	rpm	Article No.
Line voltage 400 V 3 AC Active Line Module									
300	150	3.1 (4.16)	100 (73.8)	8	403	35	630	1700	**1FW3150-1■H■2-■D■0**
		6.3 (8.45)	200 (148)	14	404	35	630	1700	**1FW3152-1■H■2-■D■0**
		9.4 (12.6)	300 (221)	20.5	405	35	610	1700	**1FW3154-1■H■2-■D■0**
		12.6 (16.9)	400 (295)	28	395	35	630	1700	**1FW3155-1■H■2-■D■0**
		15.7 (21.1)	500 (369)	34	403	35	610	1700	**1FW3156-1■H■2-■D■0**
	200	9.4 (12.6)	300 (221)	23	377	70	680	1000	**1FW3201-1■H■2-■D■0**
		15.7 (21.1)	500 (369)	37	365	70	670	1000	**1FW3202-1■H■2-■D■0**
		23.6 (31.6)	750 (553)	59	343	70	710	1000	**1FW3203-1■H■2-■D■0**
		31.4 (42.1)	1000 (738)	74	355	70	670	1000	**1FW3204-1■H■2-■D■0**
		47.1 (63.2)	1500 (1106)	118	351	70	700	1000	**1FW3206-1■H■2-■D■0**
		62.8 (84.2)	2000 (1475)	153	346	70	690	1000	**1FW3208-1■H■2-■D■0**
400	280	98.0 (131)	2350 (1733)	188	389	66.7	720	1000	**1FW3281-3■J■3-■D■0**
		138.0 (185)	3300 (2434)	275	373	66.7	750	1000	**1FW3283-3■J■3-■D■0**
		197.0 (264)	4700 (3467)	376	386	66.7	720	1000	**1FW3285-3■J■3-■D■0**
		276.0 (370)	6600 (4868)	504	405	66.7	690	1000	**1FW3287-3■J■3-■D■0**

Shaft design:	
Hollow shaft	**A**
Plug-on shaft	**S**
Solid shaft without feather key	**M**
Solid shaft with parallel key (half key balanced)	**H**

For information on the shaft designs, see section "Article No. supplements for shaft design"

Further rated speeds on request.

For footnotes, see next page.

© Siemens AG 2017

Motor type (repeated)	Static torque	Stall current	Effi-ciency [3]	Moment of inertia	Weight, approx.	Terminal box	SINAMICS S120 Motor Module: Rated output current [4]	SINAMICS S120 Motor Module: Internal air cooling
	M_0 at ΔT=100 K	I_0 at ΔT=100 K	η	J	m		I_{rated}	For further components see SINAMICS S120 drive system
	Nm (lb_f-ft)	A		kgm^2 (lb_f-in-s^2)	kg (lb)	Type	A	Article No.
1FW3150-1.H.2-....	105 (77.4)	7.3	0.89	0.12 (1.06)	87 (192)	gk230	9	**6SL3120-1TE21-0AD.**
1FW3152-1.H.2-....	210 (155)	15	0.92	0.16 (1.42)	108 (238)	gk230	18	**6SL3120-1TE21-8AD.**
1FW3154-1.H.2-....	315 (232)	21.5	0.93	0.20 (1.77)	129 (284)	gk230	30	**6SL3120-1TE23-0AD.**
1FW3155-1.H.2-....	420 (310)	29	0.94	0.24 (2.12)	150 (331)	gk230	30	**6SL3120-1TE23-0AD.**
1FW3156-1.H.2-....	525 (387)	35	0.94	0.28 (2.48)	171 (377)	gk230	45	**6SL3120-1TE24-5AA.**
1FW3201-1.H.2-....	315 (232)	24	0.92	0.22 (1.95)	127 (280)	gk230	30	**6SL3120-1TE23-0AD.**
1FW3202-1.H.2-....	525 (387)	39	0.94	0.36 (3.19)	156 (344)	gk230	45	**6SL3120-1TE24-5AA.**
1FW3203-1.H.2-....	790 (583)	62	0.95	0.49 (4.34)	182 (401)	gk420	60	**6SL3120-1TE26-0AA.**
1FW3204-1.H.2-....	1050 (774)	77	0.95	0.70 (6.2)	225 (496)	gk420	85	**6SL3120-1TE28-5AA.**
1FW3206-1.H.2-....	1575 (1162)	121	0.95	0.97 (8.59)	280 (617)	gk630	132	**6SL3120-1TE31-3AA.**
1FW3208-1.H.2-....	2100 (1549)	160	0.94	1.31 (11.6)	350 (772)	gk630	200	**6SL3120-1TE32-0AA.**
1FW3281-3.J.3-....	2500 (1844)	200	0.96	3.78 (33.5)	600 (1323)	1XB7700	200	**6SL3120-1TE32-0AA.**
1FW3283-3.J.3-....	3500 (2581)	292	0.96	4.64 (41.1)	690 (1521)	1XB7700	310	**6SL3320-1TE33-1AA.**
1FW3285-3.J.3-....	5000 (3688)	400	0.96	5.98 (52.9)	860 (1896)	1XB7700	380	**6SL3320-1TE33-8AA.**
1FW3287-3.J.3-....	7000 (5163)	534	0.97	7.81 (69.1)	1030 (2271)	1XB7712	618 [5]	**6SL3320-1TE37-5AA.**

Format:	
Booksize	**1**
Chassis	**3**
Motor Module:	
Single Motor Module	**1**
Version status	

10

1) Maximum permissible operating speed based on the induced voltage in the motor and the voltage strength of the converter (without protective circuit).
2) Maximum speed that must not be exceeded. Certain constraints may apply, see article number supplements.
3) Optimum efficiency in continuous duty.
4) The rated pulse frequencies must be taken into account. The rated motor data is valid for 4 kHz or 2 kHz.
5) The rated output current of the Motor Module is lower than the rated motor current at 2 kHz.

© Siemens AG 2017

Selection and ordering data

Rated speed	Shaft height	Rated power	Rated torque	Rated current	Rated voltage	Rated frequency	Operating speed, max. 1)	Speed, max. 2)	**SIMOTICS T-1FW3 complete torque motors Water cooling**
n_{rated}	SH	P_{rated} at ΔT=100 K	M_{rated} at ΔT=100 K	I_{rated} at ΔT=100 K	U_{rated}	f_{rated}	$n_{max, Inv}$	n_{max}	
rpm		kW (hp)	Nm (lb_f-ft)	A	V	Hz	rpm	rpm	Article No.
Line voltage 400 V 3 AC Active Line Module									
500	150	5.2 (6.97)	100 (73.8)	12	413	58.3	960	1700	**1FW3150-1■L■2-■D■0**
		10.5 (14.1)	200 (148)	22	415	58.3	960	1700	**1FW3152-1■L■2-■D■0**
		15.7 (21.1)	300 (221)	32	415	58.3	950	1700	**1FW3154-1■L■2-■D■0**
		20.9 (28.0)	400 (295)	43	412	58.3	960	1700	**1FW3155-1■L■2-■D■0**
		26.2 (35.1)	500 (369)	53	415	58.3	950	1700	**1FW3156-1■L■2-■D■0**
	200	15.7 (21.1)	300 (221)	37	386	116.7	1110	1000	**1FW3201-1■L■2-■D■0**
		26.2 (35.1)	500 (369)	59	376	116.7	1070	1000	**1FW3202-1■L■2-■D■0**
		39.3 (52.7)	750 (553)	92	366	116.7	1110	1000	**1FW3203-1■L■2-■D■0**
		52.3 (70.1)	1000 (738)	118	371	116.7	1060	1000	**1FW3204-1■L■2-■D■0**
		73.3 (98.3)	1400 (1033)	169	353	116.7	1090	1000	**1FW3206-1■L■2-■D■0**
		96.8 (130)	1850 (1364)	226	368	116.7	1100	1000	**1FW3208-1■L■2-■D■0**
600	280	138.0 (185)	2200 (1623)	256	387	100.0	1050	1000	**1FW3281-3■M■3-■D■0**
		195.0 (261)	3100 (2286)	357	394	100.0	1030	1000	**1FW3283-3■M■3-■D■0**
		276.0 (370)	4400 (3245)	469	415	100.0	960	1000	**1FW3285-3■M■3-■D■0**
		380.0 (510)	6050 (4462)	696	389	100.0	1030	1000	**1FW3287-3■M■3-■A■0**

Shaft design:	
Hollow shaft	**A**
Plug-on shaft	**S**
Solid shaft without feather key	**M**
Solid shaft with parallel key (half key balanced)	**H**

For information on the shaft designs, see section "Article No. supplements for shaft design"

Further rated speeds on request.

For footnotes, see next page.

© Siemens AG 2017

Motor type (repeated)	Static torque	Stall current	Effi-ciency [3]	Moment of inertia	Weight, approx.	Terminal box	SINAMICS S120 Motor Module: Rated output current [4]	SINAMICS S120 Motor Module: Internal air cooling
	M_0 at ΔT=100 K	I_0 at ΔT=100 K	η	J	m		I_{rated}	For further components see SINAMICS S120 drive system
	Nm (lb_f-ft)	A		kgm^2 (lb_f-in-s^2)	kg (lb)	Type	A	Article No.
1FW3150-1.L.2-....	105 (77.4)	11.5	0.90	0.12 (1.06)	87 (192)	gk230	18	**6SL3120-1TE21-8AD.**
1FW3152-1.L.2-....	210 (155)	22.5	0.92	0.16 (1.42)	108 (238)	gk230	30	**6SL3120-1TE23-0AD.**
1FW3154-1.L.2-....	315 (232)	33	0.93	0.20 (1.77)	129 (284)	gk230	45	**6SL3120-1TE24-5AA.**
1FW3155-1.L.2-....	420 (310)	45	0.94	0.24 (2.12)	150 (331)	gk230	45	**6SL3120-1TE24-5AA.**
1FW3156-1.L.2-....	525 (387)	55	0.94	0.28 (2.48)	171 (377)	gk420	60	**6SL3120-1TE26-0AA.**
1FW3201-1.L.2-....	315 (232)	38	0.92	0.22 (1.95)	127 (280)	gk230	18	**6SL3120-1TE21-8AD.**
1FW3202-1.L.2-....	525 (387)	62	0.94	0.36 (3.19)	156 (344)	gk420	30	**6SL3120-1TE23-0AD.**
1FW3203-1.L.2-....	790 (583)	100	0.95	0.49 (4.34)	182 (401)	gk420	45	**6SL3120-1TE24-5AA.**
1FW3204-1.L.2-....	1050 (774)	129	0.95	0.70 (6.2)	225 (496)	gk630	45	**6SL3120-1TE24-5AA.**
1FW3206-1.L.2-....	1575 (1162)	189	0.95	0.97 (8.6)	280 (617)	gk630	85	**6SL3120-1TE28-5AA.**
1FW3208-1.L.2-....	2100 (1549)	255	0.94	1.31 (11.6)	350 (772)	gk630	85	**6SL3120-1TE28-5AA.**
1FW3281-3.M.3-....	2500 (1844)	291	0.96	3.78 (33.5)	600 (1323)	1XB7700	260	**6SL3320-1TE32-6AA.**
1FW3283-3.M.3-....	3500 (2581)	402	0.96	4.64 (41.1)	690 (1521)	1XB7700	380	**6SL3320-1TE33-8AA.**
1FW3285-3.M.3-....	5000 (3688)	532	0.97	5.98 (52.9)	860 (1896)	1XB7712	490	**6SL3320-1TE35-0AA.**
1FW3287-3.M.3-....	6850 (5052)	787	0.97	7.81 (69.1)	1030 (2271)	1XB7712	734 [5]	**6SL3320-1TE38-4AA.**

Format:	
Booksize	**1**
Chassis	**3**
Motor Module:	
Single Motor Module	**1**
Version status	

10

[1] Maximum permissible operating speed based on the induced voltage in the motor and the voltage strength of the converter (without protective circuit).
[2] Maximum speed that must not be exceeded. Certain constraints may apply, see article number supplements.
[3] Optimum efficiency in continuous duty.
[4] The rated pulse frequencies must be taken into account. The rated motor data is valid for 4 kHz or 2 kHz.
[5] The rated output current of the Motor Module is lower than the rated motor current at 2 kHz.

© Siemens AG 2017

Selection and ordering data

Rated speed	Shaft height	Rated power	Rated torque	Rated current	Rated voltage	Rated frequency	Operating speed, max. 1)	Speed, max. 2)	**SIMOTICS T-1FW3 complete torque motors Water cooling**
n_{rated}	SH	P_{rated} at ΔT=100 K	M_{rated} at ΔT=100 K	I_{rated} at ΔT=100 K	U_{rated}	f_{rated}	$n_{max, Inv}$	n_{max}	
rpm		kW (hp)	Nm (lb_f-ft)	A	V	Hz	rpm	rpm	Article No.
Line voltage 400 V 3 AC Active Line Module									
750	150	7.9 (10.6)	100 (73.8)	18	410	87.5	1470	1700	**1FW3150-1■P■2-■D■0**
		15.7 (21.1)	200 (148)	32.5	415	87.5	1450	1700	**1FW3152-1■P■2-■D■0**
		23.6 (31.6)	300 (221)	47.5	412	87.5	1420	1700	**1FW3154-1■P■2-■D■0**
		31.4 (42.1)	400 (295)	64	401	87.5	1450	1700	**1FW3155-1■P■2-■D■0**
		39.3 (52.7)	500 (369)	76	415	87.5	1380	1700	**1FW3156-1■P■2-■D■0**

Shaft design:	
Hollow shaft	**A**
Plug-on shaft	**S**
Solid shaft without feather key	**M**
Solid shaft with parallel key (half key balanced)	**H**

For information on the shaft designs, see section "Article No. supplements for shaft design"

Further rated speeds on request.

For footnotes, see next page.

© Siemens AG 2017

Motor type (repeated)	Static torque	Stall current	Effi-ciency [3]	Moment of inertia	Weight, approx.	Terminal box	**SINAMICS S120 Motor Module**	
							Rated output current [4]	Internal air cooling For further components see SINAMICS S120 drive system
	M_0 at ΔT=100 K	I_0 at ΔT=100 K	η	J	m		I_{rated}	
	Nm (lb_f-ft)	A		kgm^2 (lb_f-in-s^2)	kg (lb)	Type	A	Article No.
1FW3150-1.P.2-....	105 (77.4)	17.5	0.90	0.12 (1.06)	87 (192)	gk230	30	**6SL3■20-1TE23-0AD.**
1FW3152-1.P.2-....	210 (155)	33.5	0.93	0.16 (1.42)	108 (238)	gk230	45	**6SL3■20-1TE24-5AA.**
1FW3154-1.P.2-....	315 (232)	49	0.93	0.20 (1.77)	129 (284)	gk230	60	**6SL3■20-1TE26-0AA.**
1FW3155-1.P.2-....	420 (310)	67	0.94	0.24 (2.12)	150 (331)	gk420	85	**6SL3■20-1TE28-5AA.**
1FW3156-1.P.2-....	525 (387)	80	0.94	0.28 (2.48)	171 (377)	gk420	85	**6SL3■20-1TE28-5AA.**

Format:		
Booksize	**1**	
Chassis	**3**	
Motor Module:		
Single Motor Module		**1**
Version status		

[1] Maximum permissible operating speed based on the induced voltage in the motor and the voltage strength of the converter (without protective circuit).
[2] Maximum speed that must not be exceeded. Certain constraints may apply, see article number supplements.
[3] Optimum efficiency in continuous duty.
[4] The rated pulse frequencies must be taken into account. The rated motor data is valid for 4 kHz or 2 kHz.

© Siemens AG 2017

Selection and ordering data

Rated speed	Shaft height	Rated power	Rated torque	Rated current	Rated voltage	Rated frequency	Operating speed, max. 1)	Speed, max. 2)	**SIMOTICS T-1FW3 complete torque motors Water cooling**
n_{rated}	SH	P_{rated} at ΔT=100 K	M_{rated} at ΔT=100 K	I_{rated} at ΔT=100 K	U_{rated}	f_{rated}	$n_{max, Inv}$	n_{max}	
rpm		kW (hp)	Nm (lb_f-ft)	A	V	Hz	rpm	rpm	Article No.
Line voltage 400 V 3 AC Active Line Module									
800	200	20.5 (27.5)	245 (181)	37	350	106.7	1320	1800	**1FW3201-3■P■3-■D■0**
		39.5 (53.0)	470 (347)	69	358	106.7	1290	1800	**1FW3202-3■P■3-■D■0**
		57 (76.4)	680 (502)	96	368	106.7	1250	1800	**1FW3203-3■P■3-■D■0**
		78 (105)	930 (686)	137	353	106.7	1310	1800	**1FW3204-3■P■3-■D■0**
		114 (153)	1360 (1003)	192	368	106.7	1260	1800	**1FW3206-3■P■3-■D■0**
		159 (213)	1900 (1401)	270	365	106.7	1270	1800	**1FW3208-3■P■3-■D■0**
1200	200	29 (38.9)	230 (170)	50	367	160	1890	1800	**1FW3201-3■S■3-■D■0**
		55 (73.8)	440 (325)	92	376	160	1850	1800	**1FW3202-3■S■3-■D■0**
		79 (106)	630 (465)	131	377	160	1840	1800	**1FW3203-3■S■3-■D■0**
		108 (145)	860 (634)	191	353	160	1970	1800	**1FW3204-3■S■3-■D■0**
		152 (204)	1210 (892)	270	351	160	1980	1800	**1FW3206-3■S■3-■D■0**
		215 (288)	1700 (1254)	385	342	160	2050	1800	**1FW3208-3■S■3-■D■0**

Shaft design:	
Plug-on shaft	**S**
Solid shaft without feather key	**M**
Solid shaft with parallel key (half key balanced)	**H**

For information on the shaft designs, see section "Article No. supplements for shaft design"

Further rated speeds on request.

For footnotes, see next page.

© Siemens AG 2017

Motor type (repeated)	Static torque	Stall current	Effi-ciency [3]	Moment of inertia	Weight, approx.	Terminal box	**SINAMICS S120 Motor Module**	
							Rated output current [4]	Internal air cooling For further components see SINAMICS S120 drive system
	M_0 at ΔT=100 K	I_0 at ΔT=100 K	η	J	m		I_{rated}	
	Nm (lb_f-ft)	A		kgm^2 (lb_f-in-s^2)	kg (lb)	Type	A	Article No.
1FW3201-3.P..	260 (192)	38	88.7	0.27 (2.39)	159 (351)	gk420	45	**6SL3120-1TE24-5AA.**
1FW3202-3.P..	500 (369)	72	91	0.40 (3.54)	188 (414)	gk420	85	**6SL3120-1TE28-5AA.**
1FW3203-3.P..	730 (538)	102	92.2	0.52 (4.6)	215 (474)	gk420	132	**6SL3120-1TE31-3AA.**
1FW3204-3.P..	1000 (738)	145	92.8	0.69 (6.11)	259 (571)	gk630	200	**6SL3120-1TE32-0AA.**
1FW3206-3.P..	1500 (1106)	210	93.3	0.94 (8.32)	342 (754)	1XB7700	200	**6SL3120-1TE32-0AA.**
1FW3208-3.P..	2100 (1549)	295	93.7	1.24 (11.0)	412 (908)	1XB7700	310	**6SL3320-1TE33-1AA.**
1FW3201-3.S..	260 (192)	54	90.1	0.27 (2.39)	159 (351)	gk420	60	**6SL3120-1TE26-0AA.**
1FW3202-3.S..	500 (369)	102	92.2	0.40 (3.54)	188 (414)	gk420	132	**6SL3120-1TE31-3AA.**
1FW3203-3.S..	730 (538)	149	93.5	0.52 (4.6)	215 (474)	gk630	132	**6SL3120-1TE31-3AA.**
1FW3204-3.S..	1000 (738)	220	94	0.69 (6.11)	259 (571)	gk630	200	**6SL3120-1TE32-0AA.**
1FW3206-3.S..	1500 (1106)	330	94.3	0.94 (8.32)	342 (754)	1XB7700	310	**6SL3320-1TE33-1AA.**
1FW3208-3.S..	2100 (1549)	470	94.6	1.24 (11.0)	412 (908)	1XB7700	490	**6SL3320-1TE35-0AA.**

Format:		
Booksize	**1**	
Chassis	**3**	
Motor Module:		
Single Motor Module		**1**
Version status		

10

[1] Maximum permissible operating speed based on the induced voltage in the motor and the voltage strength of the converter (without protective circuit).
[2] Maximum speed that must not be exceeded.
[3] Optimum efficiency in continuous duty.
[4] The rated pulse frequencies must be taken into account. The rated motor data is valid for 4 kHz or 2 kHz.

© Siemens AG 2017

Selection and ordering data

Article No. supplements for shaft design: Hollow shaft

Position of the article No.	1	2	3	4	5	6	7	-	8	9	10	11	12	-	13	14	15	16	-	Z
Shaft height 150	**1**	**F**	**W**	**3**	**1**	**5**	**.**	**–**	**1**	■	**.**	■	**2**	**–**	■	**D**	**A**	**0**	**–**	**Z**
Shaft height 200	**1**	**F**	**W**	**3**	**2**	**0**	**.**	**–**	**1**	■	**.**	■	**2**	**–**	■	**D**	**A**	**0**	**–**	**Z**
Shaft height 280	**1**	**F**	**W**	**3**	**2**	**8**	**.**	**–**	**.**	■	**.**	■	**3**	**–**	■	**D**	**A**	**0**	**–**	**Z**
Construction length [1]							**.**													
Standard design 1FW315/1FW320									**1**											
Standard design 1FW328									**2**											
High-speed design 1FW328									**3**											
Encoder systems for motors without DRIVE-CLiQ interface					**Mounting**															
Without encoder					–					**W**		**6**								
IC2048S/R encoder					Over belt drive					**A**		**7**								
AM2048S/R encoder					Over belt drive					**E**		**7**								
Multi-pole resolver					Over belt drive					**S**		**7**								
Encoder systems for motors with DRIVE-CLiQ interface					**Mounting**															
IC22DQ encoder					Over belt drive					**D**		**7**								
AM22DQ encoder					Over belt drive					**F**		**7**								
R15DQ resolver					Over belt drive					**U**		**7**								
Rated speeds at 400 V 3 AC (winding design)																				
150 rpm for standard design 1FW320/1FW328											**E**									
250 rpm for standard design 1FW328											**G**									
300 rpm for standard design 1FW315/1FW320											**H**									
400 rpm for high-speed design 1FW328											**J**									
500 rpm for standard design 1FW315/1FW320											**L**									
600 rpm for high-speed design 1FW328											**M**									
750 rpm for standard design 1FW315											**P**									
Type of construction																				
IM B14 for 1FW315/1FW320 (flange-mounted without base, with threaded hole)													**2**							
IM B35 for 1FW328 (hollow-shaft design (flange-mounted and base-mounted))													**3**							
Power connection (view of DE)					**Cable outlet**															
Terminal box top					Transverse right										**5**					
Terminal box top					Transverse left										**6**					
Terminal box top					NDE										**7**					
Terminal box top					DE										**8**					
Shaft design																				
Hollow shaft																	**A**			
Special design (order codes are required for options)																			**–**	**Z**

[1] Not selectable. Determined by the choice of rated power.

© Siemens AG 2017

Selection and ordering data

Article No. supplements for shaft design: Plug-on shaft

Position of the article No.	1	2	3	4	5	6	7	-	8	9	10	11	12	-	13	14	15	16	-	Z
Shaft height 150	**1**	**F**	**W**	**3**	**1**	**5**	**.**	**–**	**1**	■	**.**	**6**	**2**	**–**	■	**D**	**S**	**0**	**–**	**Z**
Shaft height 200	**1**	**F**	**W**	**3**	**2**	**0**	**.**	**–**	**.**	■	**.**	**6**	**2**	**–**	■	**D**	**S**	**0**	**–**	**Z**
Shaft height 280	**1**	**F**	**W**	**3**	**2**	**8**	**.**	**–**	**1**	■	**.**	**6**	**2**	**–**	■	**D**	**S**	**0**	**–**	**Z**
Construction length [1]							**.**													
Standard design 1FW315/1FW320									**1**											
Standard design 1FW328									**2**											
High-speed design 1FW320/1FW328									**3**											
Encoder systems for motors without DRIVE-CLiQ interface					**Mounting**															
AM2048S/R encoder					Coaxial					**E**		**6**								
Encoder systems for motors with DRIVE-CLiQ interface					**Mounting**															
AS24DQI encoder					Coaxial					**B**		**6**								
AM24DQI encoder					Coaxial					**C**		**6**								
Rated speeds at 400 V 3 AC (winding design)																				
150 rpm for standard design 1FW320/1FW328											**E**									
250 rpm for standard design 1FW328											**G**									
300 rpm for standard design 1FW315/1FW320											**H**									
400 rpm for high-speed design 1FW328											**J**									
500 rpm for standard design 1FW315/1FW320											**L**									
600 rpm for high-speed design 1FW328											**M**									
750 rpm for standard design 1FW315											**P**									
800 rpm for high-speed design 1FW320											**P**									
1200 rpm for high-speed design 1FW320											**S**									
Type of construction																				
Plug-on installation performed by the customer for shaft height 1FW315/1FW320 (not in accordance with EN 60034-7 (IEC 60034-7))													**2**							
Plug-on installation performed by the customer for shaft height 1FW328 (not in accordance with EN 60034-7 (IEC 60034-7))													**8**							
Power connection (view of DE)	**Cable outlet**																			
Terminal box top	Transverse right														**5**					
Terminal box top	Transverse left														**6**					
Terminal box top	NDE														**7**					
Terminal box top	DE														**8**					
Shaft design																				
Plug-on shaft																	**S**			
Special design (order codes are required for options)																			**–**	**Z**

[1] Not selectable. Determined by the choice of rated power.

© Siemens AG 2017

Selection and ordering data

Article No. supplements for shaft design: Solid shaft

Position of the article No.	1	2	3	4	5	6	7	-	8	9	10	11	12	-	13	14	15	16	-	Z
Shaft height 150	**1**	**F**	**W**	**3**	**1**	**5**	**.**	**–**	**.**	■	**.**	**6**	**2**	**–**	■	**D**	■	**0**	**–**	**Z**
Shaft height 200	**1**	**F**	**W**	**3**	**2**	**0**	**.**	**–**	**.**	■	**.**	**6**	**2**	**–**	■	**D**	■	**0**	**–**	**Z**
Shaft height 280	**1**	**F**	**W**	**3**	**2**	**8**	**.**	**–**	**.**	■	**.**	**6**	■	**–**	■	**D**	■	**0**	**–**	**Z**
Construction length [1]							**.**													
Standard design 1FW315/1FW320									**1**											
Standard design 1FW328									**2**											
High-speed design 1FW320/1FW328									**3**											
Encoder systems for motors without DRIVE-CLiQ interface					**Mounting**															
AM2048S/R encoder					Coaxial					**E**		**6**								
Encoder systems for motors with DRIVE-CLiQ interface					**Mounting**															
AS24DQI encoder					Coaxial					**B**		**6**								
AM24DQI encoder					Coaxial					**C**		**6**								
Rated speeds at 400 V 3 AC (winding design)																				
150 rpm for standard design 1FW320/1FW328											**E**									
250 rpm for standard design 1FW328											**G**									
300 rpm for standard design 1FW315/1FW320											**H**									
400 rpm for high-speed design 1FW328											**J**									
500 rpm for standard design 1FW315/1FW320											**L**									
600 rpm for high-speed design 1FW328											**M**									
750 rpm for standard design 1FW315											**P**									
1050 rpm for high-speed design 1FW320											**P**									
1200 rpm for high-speed design 1FW320											**S**									
Type of construction																				
IM B14 for 1FW315/1FW320 (flange-mounted without base, with threaded hole)													**2**							
IM B3 with 1FW328 (base-mounted)													**6**							
IM B34 for 1FW328 (flange-mounted with base, with threaded hole)													**4**							
Power connection (view of DE)	**Cable outlet**																			
Terminal box top	Transverse right														**5**					
Terminal box top	Transverse left														**6**					
Terminal box top	NDE														**7**					
Terminal box top	DE														**8**					
Shaft design																				
Solid shaft without feather key																	**M**			
Solid shaft with parallel key (half key balanced)																	**H**			
Special design (order codes are required for options)																			**–**	**Z**

[1] Not selectable. Determined by the choice of rated power.

© Siemens AG 2017

Options

Order code	Description
A11	Motor protection by PTC thermistor (3 × PTC)
K40	Regreasing device
L03	Heavy-duty design (only for 1FW320/1FW328)
T20	Shaft cover at NDE (not required for coaxial encoder mounting)
V07	Special grease lubrication for low speeds
X01	Paint finish: Jet black, matt RAL 9005
X02	Paint finish: Cream white RAL 9001
X03	Paint finish: Reseda green RAL 6011
X04	Paint finish: Pebble gray RAL 7032
X05	Paint finish: Sky blue RAL 5015
X06	Paint finish: Light ivory RAL 1015

-Z must be appended to the Article No. to order a motor with options.

Example:
1FW3150-1AH72-5AA0**-Z**
A11+**X05**

Accessories

Order code	Description
Q30	Clamping element [5] • One-piece for plug-on shaft • Two-piece for hollow shaft
T32	Stator torque arm [4] [5]

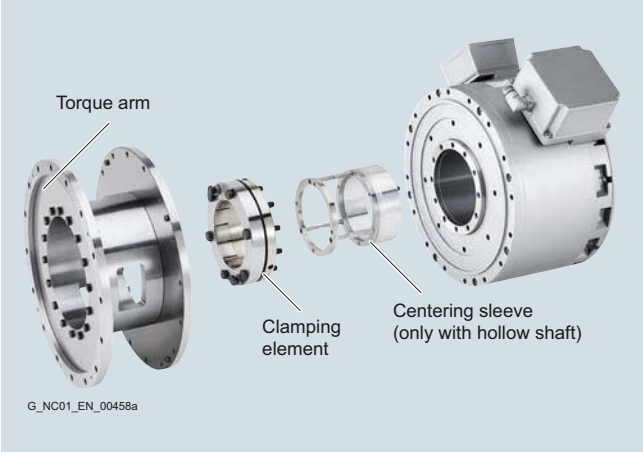

Terminal box, max. connectable conductor cross-sections

Terminal box Type	Cable entry Rating	External signals	Outer cable diameter, max. [1] mm (in)	Number of main terminals	Cross-section per terminal, max. mm²	Rated current, max. [2] A
gk230	2 × M32 × 1.5	1 × M16 × 1.5 [3]	16 (0.63)	Phases: 3 × M5 Grounding: 1 × M4	2 × 16	50
gk420	2 × M40 × 1.5	1 × M16 × 1.5 [3]	35 (1.38)	Phases: 3 × M10 Grounding: 1 × M6	2 × 35	105
gk630	2 × M50 × 1.5	2 × M16 × 1.5 [3]	50 (1.97)	Phases: 3 × M10 Grounding: 1 × M10	2 × 50	260
1XB7700	3 × M75 × 1.5	2 × M16 × 1.5 [3]	120 (4.72)	Phases: 3 × M12 Grounding: 1 × M12	3 × 120	450
1XB7712	4 × M75 × 1.5	4 × PG 13.5 1 × M20 × 1.5 1 × M25 × 1.5 [3]	120 (4.72)	Phases: 3 × M16 Grounding: 1 × M16	4 × 120	800

[1] Dependent on the design of the metric gland.
[2] Current-carrying capacity based on EN 60204-1 and IEC 60364-5-52 for installation type C.
[3] Only for option A11 or 9th data position “W” (without encoder).
[4] Depending on motor type. Enquire regarding availability.
[5] Not for solid shaft.

© Siemens AG 2017

Dimensional drawings

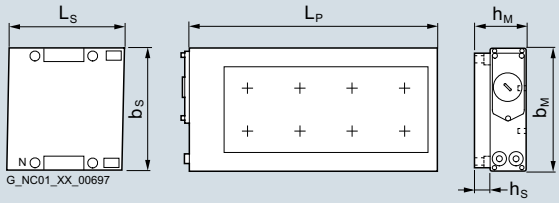

1FN3050 to 1FN3450 without precision cooling

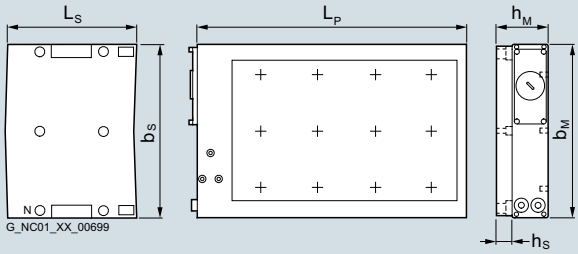

1FN3600 to 1FN3900 without precision cooling
Note: 4-row drill pattern with 1FN3900 for fixing the primary section

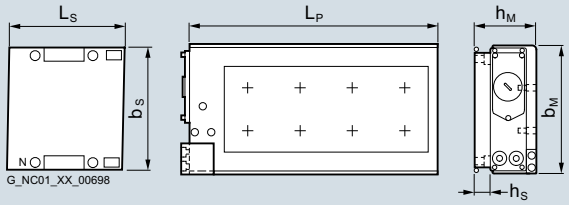

1FN3050 to 1FN3450 with precision cooling

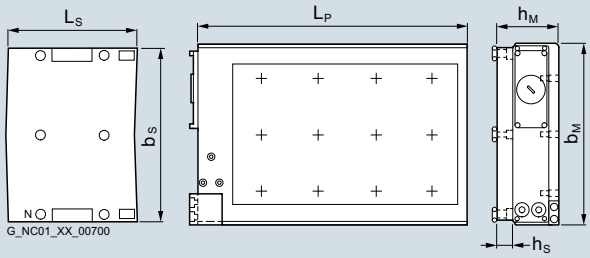

1FN3600 to 1FN3900 with precision cooling
Note: 4-row drill pattern with 1FN3900 for fixing the primary section

Primary section	Dimensions in mm (inches)					Secondary section	Dimensions in mm (inches)				
	without precision cooling		with precision cooling		Primary section length		without precision cooling		with precision cooling and cover		Secondary section length
Type	b_M	h_M	b_M	h_M	L_P	Type	b_S	h_S	b_S	h_S	L_S
SIMOTICS L-1FN3 linear motors, version for peak load – Water cooling											
1FN3050-2W	67 (2.64)	48.5 (1.91)	76 (2.99)	63.4 (2.50)	255 (10.04)	1FN3050-4SA00-0AA0	58 (2.28)	11.8 (0.46)	75 (2.95)	14.8 (0.58)	120 (4.72)
1FN3100-1W	96 (3.78)	48.5 (1.91)	–	–	150 (5.91)	1FN3100-4SA00-0AA0	88 (3.46)	11.8 (0.46)	105 (4.13)	14.8 (0.58)	120 (4.72)
1FN3100-2W			105 (4.13)	63.4 (2.50)	255 (10.04)						
1FN3100-3W					360 (14.17)						
1FN3100-4W					465 (18.31)						
1FN3100-5W					570 (22.44)						
1FN3150-1W	126 (4.96)	50.5 (1.99)	–	–	150 (5.91)	1FN3150-4SA00-0AA0	118 (4.65)	13.8 (0.54)	135 (5.31)	16.8 (0.66)	120 (4.72)
1FN3150-2W			135 (5.31)	65.4 (2.57)	255 (10.04)						
1FN3150-3W					360 (14.17)						
1FN3150-4W					465 (18.31)						
1FN3150-5W					570 (22.44)						
1FN3300-1W	141 (5.55)	64.1 (2.52)	–	–	221 (8.70)	1FN3300-4SA00-0AA0	134 (5.28)	16.5 (0.65)	151 (5.94)	19.5 (0.77)	184 (7.24)
1FN3300-2W			150 (5.91)	79 (3.11)	382 (15.04)						
1FN3300-3W					543 (21.38)						
1FN3300-4W					704 (27.72)						
1FN3450-2W	188 (7.40)	66.1 (2.60)	197 (7.76)	81 (3.19)	382 (15.04)	1FN3450-4SA00-0AA0	180 (7.09)	18.5 (0.73)	197 (7.76)	21.5 (0.85)	184 (7.24)
1FN3450-3W					543 (21.38)						
1FN3450-4W					704 (27.72)						
1FN3600-2W	248 (9.76)	64.1 (2.52)	257 (10.12)	86 (3.39)	382 (15.04)	1FN3600-4SA00-0AA0	240 (9.45)	16.5 (0.65)	247 (9.72)	26.5 (1.04)	184 (7.24)
1FN3600-3W					543 (21.38)						
1FN3600-4W					704 (27.72)						
1FN3900-2W	342 (13.46)	66.1 (2.60)	351 (13.82)	88 (3.46)	382 (15.04)	1FN3900-4SA00-0AA0	334 (13.15)	18.5 (0.73)	341 (13.43)	28.5 (1.12)	184 (7.24)
1FN3900-3W					543 (21.38)						
1FN3900-4W					704 (27.72)						

© Siemens AG 2017

Dimensional drawings

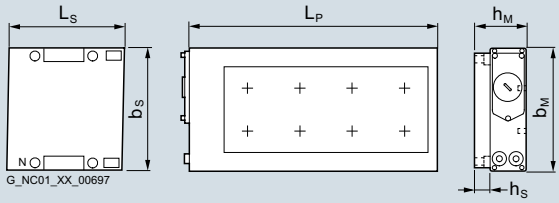

1FN3050 to 1FN3450 without precision cooling

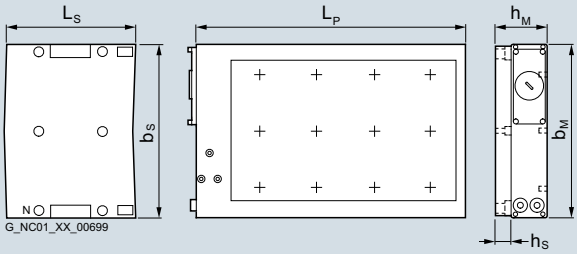

1FN3600 to 1FN3900 without precision cooling
Note: 4-row drill pattern with 1FN3900 for fixing the primary section

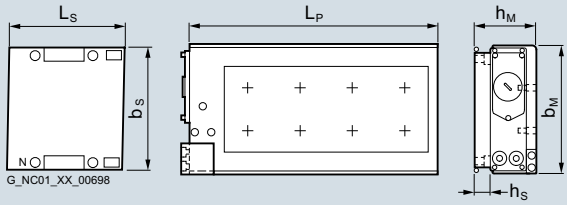

1FN3050 to 1FN3450 with precision cooling

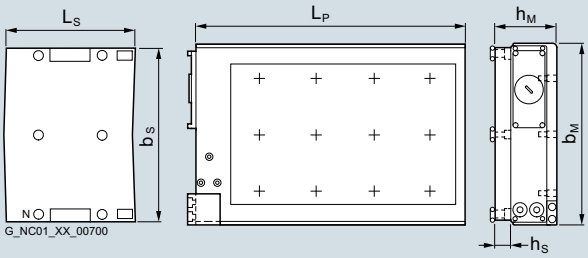

1FN3600 to 1FN3900 with precision cooling
Note: 4-row drill pattern with 1FN3900 for fixing the primary section

Primary section	Dimensions in mm (inches)					Secondary section	Dimensions in mm (inches)				
	without precision cooling		with precision cooling		Primary section length		without precision cooling		with precision cooling		Secondary section length
Type	b_M	h_M	b_M	h_M	L_P	Type	b_S	h_S	b_M	h_M	L_S
SIMOTICS L-1FN3 linear motors, version for continuous load – Water cooling											
1FN3050-1N	67 (2.64)	59.4 (2.34)	76 (2.99)	74.3 (2.93)	162 (6.38)	1FN3050-4SA00-0AA0	58 (2.28)	11.8 (0.46)	75 (2.95)	14.8 (0.58)	120 (4.72)
1FN3050-2N					267 (10.51)						
1FN3100-1N	96 (3.78)	59.4 (2.34)	105 (4.13)	74.3 (2.93)	162 (6.38)	1FN3100-4SA00-0AA0	88 (3.46)	11.8 (0.46)	105 (4.13)	14.8 (0.58)	120 (4.72)
1FN3100-2N					267 (10.51)						
1FN3100-3N					372 (14.65)						
1FN3100-4N					477 (18.78)						
1FN3150-1N	126 (4.96)	61.4 (2.42)	135 (5.31)	76.3 (3.00)	162 (6.38)	1FN3150-4SA00-0AA0	118 (4.65)	13.8 (0.54)	135 (5.31)	16.8 (0.66)	120 (4.72)
1FN3150-2N					267 (10.51)						
1FN3150-3N					372 (14.65)						
1FN3150-4N					477 (18.78)						
1FN3300-1N	141 (5.55)	78 (3.07)	150 (5.91)	92.9 (3.66)	238 (9.37)	1FN3300-4SA00-0AA0	134 (5.28)	16.5 (0.65)	151 (5.94)	19.5 (0.77)	184 (7.24)
1FN3300-2N					399 (15.71)						
1FN3300-3N					560 (22.05)						
1FN3300-4N					721 (28.39)						
1FN3450-2N	188 (7.40)	80 (3.15)	197 (7.76)	94.9 (3.74)	399 (15.71)	1FN3450-4SA00-0AA0	180 (7.09)	18.5 (0.73)	197 (7.76)	21.5 (0.85)	184 (7.24)
1FN3450-3N					560 (22.05)						
1FN3450-4N					721 (28.39)						
1FN3600-2N	248 (9.76)	78 (3.07)	257 (10.12)	99.9 (3.93)	399 (15.71)	1FN3600-4SA00-0AA0	240 (9.45)	16.5 (0.65)	247 (9.72)	26.5 (1.04)	184 (7.24)
1FN3600-3N					560 (22.05)						
1FN3600-4N					721 (28.39)						
1FN3900-2N	342 (13.46)	80 (3.15)	351 (13.82)	101.9 (4.01)	399 (15.71)	1FN3900-4SA00-0AA0	334 (13.15)	18.5 (0.73)	341 (13.43)	28.5 (1.12)	184 (7.24)
1FN3900-3N					560 (22.05)						
1FN3900-4N					721 (28.39)						

© Siemens AG 2017

SIMOTICS T-1FW6 built-in torque motors – Water cooling/natural cooling

Dimensional drawings

Water cooling
1FW6050
1FW6060

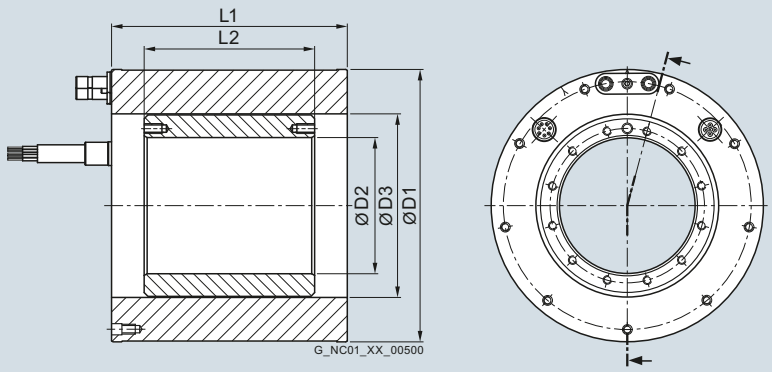

Natural cooling
1FW6053
1FW6063

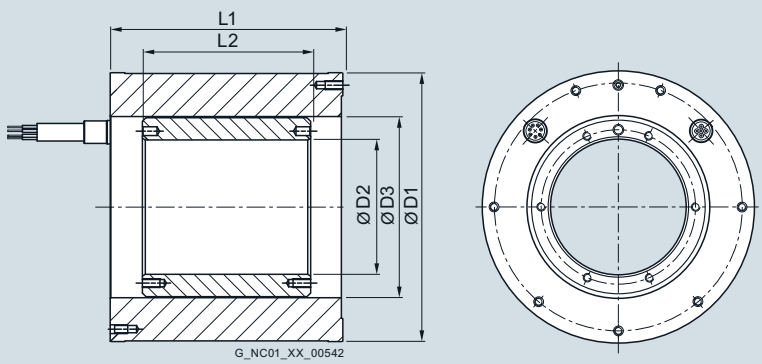

10

For motor	Dimensions in mm (inches)				
Type	D1	D2	D3	L1	L2
SIMOTICS T-1FW6 built-in torque motors, water cooling or natural cooling					
1FW605.-0.B03	159 (6.26)	64 (2.52)	96 (3.78)	89 (3.50)	35 (1.38)
1FW605.-0.B05				109 (4.29)	65 (2.56)
1FW605.-0.B07				129 (5.08)	85 (3.35)
1FW605.-0.B10				159 (6.26)	115 (4.53)
1FW605.-0.B15				209 (8.23)	165 (6.50)
1FW606.-0.B03	184 (7.24)	92 (3.62)	124 (4.88)	89 (3.50)	35 (1.38)
1FW606.-0.B05				109 (4.29)	65 (2.56)
1FW606.-0.B07				129 (5.08)	85 (3.35)
1FW606.-0.B10				159 (6.26)	115 (4.53)
1FW606.-0.B15				209 (8.23)	165 (6.50)

© Siemens AG 2017

Dimensional drawings

Water cooling
1FW6090
1FW6130
1FW6150

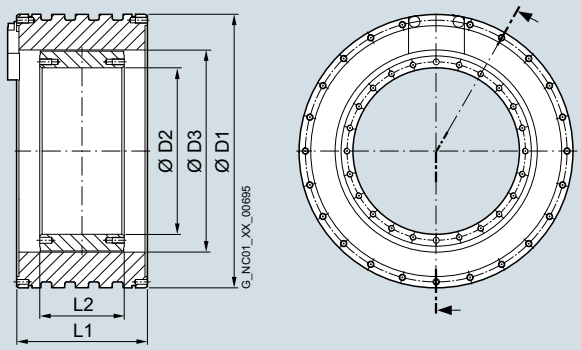

For motor	Dimensions in mm (inches)				
Type	D1	D2	D3	L1	L2
SIMOTICS T-1FW6 built-in torque motors, water cooling					
1FW6090-0.B05	230 (9.06)	140 (5.51)	170 (6.69)	90 (3.54)	51 (2.01)
1FW6090-0.B07				110 (4.33)	71 (2.80)
1FW6090-0.B10				140 (5.51)	101 (3.98)
1FW6090-0.B15				190 (7.48)	151 (5.94)
1FW6130-0.B05	310 (12.20)	220 (8.66)	254 (10.00)	90 (3.54)	51 (2.01)
1FW6130-0.B07				110 (4.33)	71 (2.80)
1FW6130-0.B10				140 (5.51)	101 (3.98)
1FW6130-0.B15				190 (7.48)	151 (5.94)
1FW6150-0.B05	385 (15.16)	265 (10.43)	300 (11.81)	110 (4.33)	51 (2.01)
1FW6150-0.B07				130 (5.12)	71 (2.80)
1FW6150-0.B10				160 (6.30)	101 (3.98)
1FW6150-0.B15				210 (8.27)	151 (5.94)

© Siemens AG 2017

Dimensional drawings

Water cooling
1FW6160
1FW6190
1FW6230
1FW6290

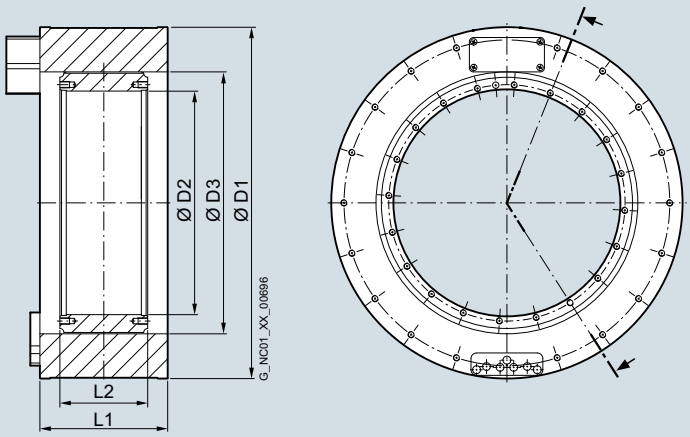

For motor	Dimensions in mm (inches)				
Type	D1	D2	D3	L1	L2
SIMOTICS T-1FW6 built-in torque motors, water cooling					
1FW6160-0.B05	440 (17.32)	280 (11.02)	328 (12.91)	110 (4.33)	60 (2.36)
1FW6160-0.B07				130 (5.12)	80 (3.15)
1FW6160-0.B10-.J.2/-5G.2/-8FB2				160 (6.30)	110 (4.33)
1FW6160-0.B10-2PB2				170 (6.69)	110 (4.33)
1FW6160-0.B15-2J.2/-5G.2/-8FB2				210 (8.27)	160 (6.30)
1FW6160-0.B15-2PB2/-0WB2				220 (8.66)	160 (6.30)
1FW6160-0.B20-5G.2/-8FB2				260 (10.23)	210 (8.27)
1FW6160-0.B20-2PB2/-0WB2				270 (10.63)	210 (8.27)
1FW6190-0.B05	502 (19.76)	342 (13.46)	389 (15.31)	110 (4.33)	60 (2.36)
1FW6190-0.B07				130 (5.12)	80 (3.15)
1FW6190-0.B10-.J.2/-5G.2/-8FB2				160 (6.30)	110 (4.33)
1FW6190-0.B10-2PB2				170 (6.69)	110 (4.33)
1FW6190-0.B15-2J.2/-5G.2/-8FB2				210 (8.27)	160 (6.30)
1FW6190-0.B15-2PB2/-0WB2				220 (8.66)	160 (6.30)
1FW6190-0.B20-5G.2/-8FB2				260 (10.24)	210 (8.27)
1FW6190-0.B20-2PB2/-0WB2				270 (10.63)	210 (8.27)
1FW6230-0.B05	576 (22.68)	416 (16.38)	463 (18.23)	110 (4.33)	60 (2.36)
1FW6230-0.B07				130 (5.12)	80 (3.15)
1FW6230-0.B10				160 (6.30)	110 (4.33)
1FW6230-0.B15-4C.2/-5G.2/-8FB2/-2PB2				210 (8.27)	160 (6.30)
1FW6230-0.B15-0WB2				220 (8.66)	160 (6.30)
1FW6230-0.B20-5G.2/-8FB2/-2PB2				260 (10.24)	210 (8.27)
1FW6230-0.B20-0WB2				270 (10.63)	210 (8.27)
1FW6290-0.B07-5G.2/-0LB2	730 (28.74)	520 (20.47)	580 (22.83)	140 (5.51)	90 (3.54)
1FW6290-0.B07-2PB2				160 (6.30)	90 (3.54)
1FW6290-0.B11-7A.2/-0LB2				180 (7.09)	130 (5.12)
1FW6290-0.B11-2PB2				200 (7.87)	130 (5.12)
1FW6290-0.B15-7A.2/-0LB2				220 (8.66)	170 (6.69)
1FW6290-0.B15-2PB2				240 (9.45)	170 (6.69)
1FW6290-0.B20-0LB2				260 (10.24)	210 (8.27)
1FW6290-0.B20-2PB2				280 (11.02)	210 (8.27)

© Siemens AG 2017

Dimensional drawings

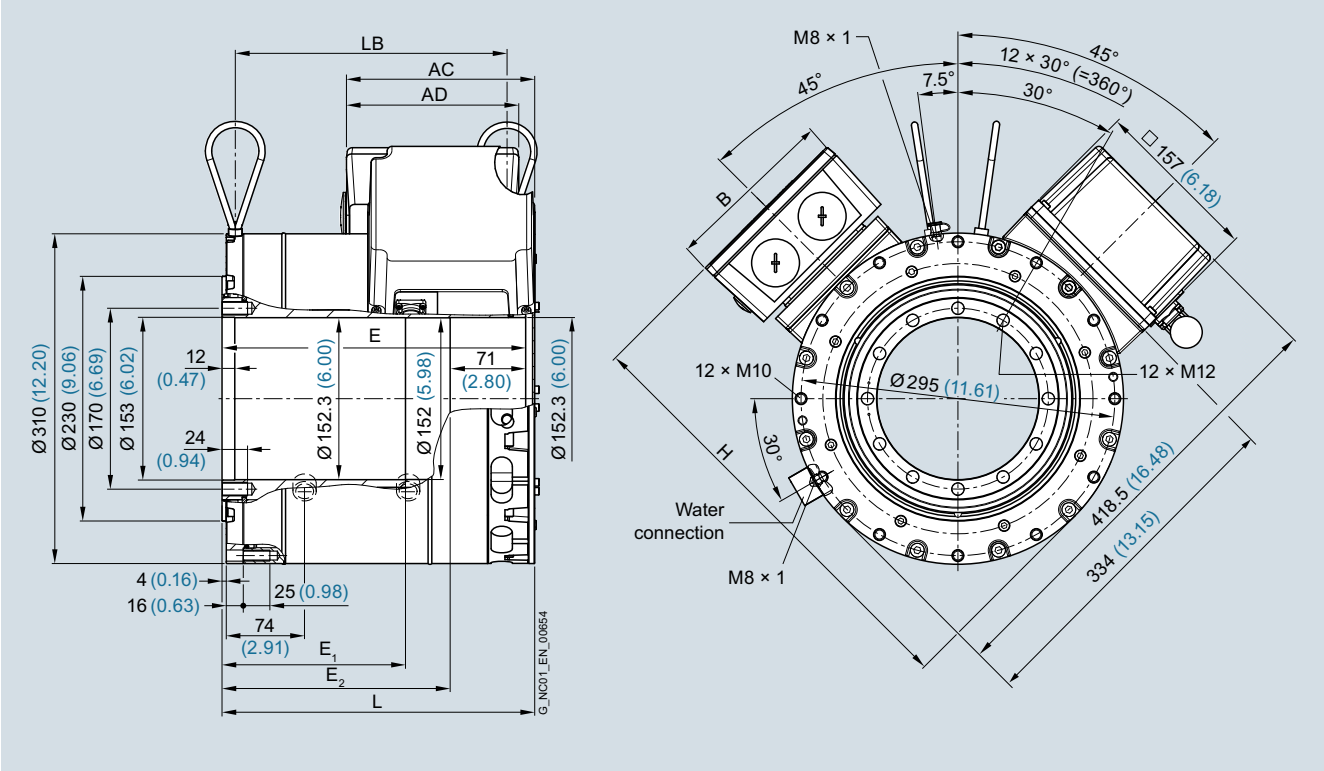

For motor		Dimensions in mm (inches)					
Shaft height	Type	IEC	L	LB	E	E_1	E_2
SIMOTICS T-1FW3 complete torque motors, IM B14 type of construction, hollow shaft							
150	1FW3150		260.5 (10.26)	226 (8.90)	256 (10.08)	141 (5.55)	185 (7.28)
	1FW3152		317.5 (12.50)	283 (11.14)	313 (12.32)	198 (7.80)	242 (9.53)
	1FW3154		366.5 (14.43)	332 (13.07)	362 (14.52)	247 (9.72)	291 (11.46)
	1FW3155		418.5 (16.48)	384 (15.12)	414 (16.30)	299 (11.77)	343 (13.50)
	1FW3156		471.5 (18.56)	437 (17.20)	467 (18.39)	352 (13.86)	396 (15.59)

Terminal box type	H	AC	AD × B
gk 230	393 (15.47)	159.5 (6.28)	122 × 117 (4.80 × 4.61)
gk 420	410 (16.14)	177 (6.97)	162 × 162 (6.38 × 6.38)
gk 630	427 (16.81)	225.5 (8.88)	210 × 210 (8.27 × 8.27)

© Siemens AG 2017

Dimensional drawings

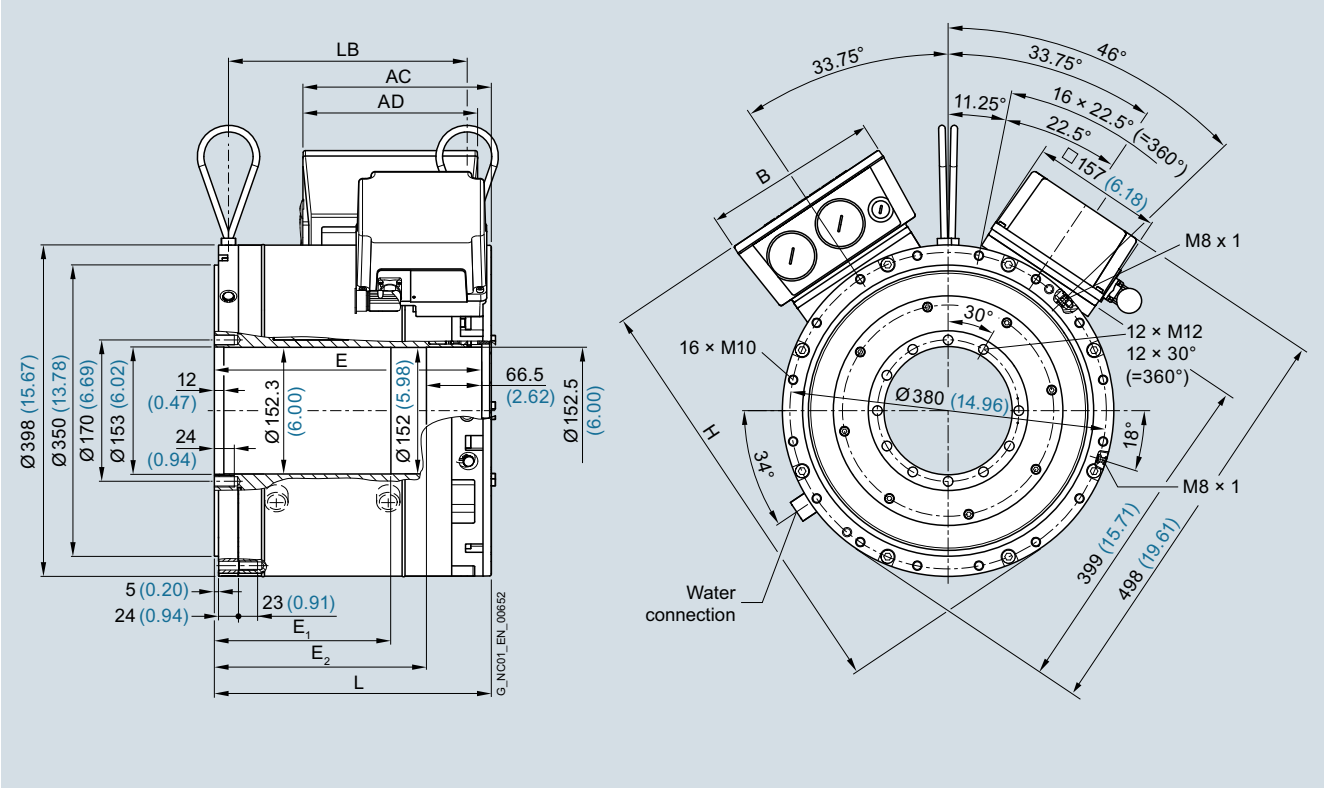

For motor			Dimensions in mm (inches)				
Shaft height	Type	IEC	L	LB	E	E_1	E_2
SIMOTICS T-1FW3 complete torque motors, IM B14 type of construction, hollow shaft							
200	1FW3201		235.5 (9.27)	194.5 (7.66)	229 (9.02)	120 (4.72)	162.5 (6.40)
	1FW3202		281.5 (11.08)	240.5 (9.47)	275 (10.83)	166 (6.54)	208.5 (8.21)
	1FW3203		328 (12.91)	287 (11.30)	321.5 (12.66)	212 (8.35)	255 (10.04)
	1FW3204		397 (15.63)	356 (14.02)	390.5 (15.37)	281 (11.06)	324 (12.76)
	1FW3206		489.5 (19.27)	448.5 (17.66)	483 (19.02)	374 (14.72)	416.5 (16.40)
	1FW3208		604.5 (23.80)	563.5 (22.18)	598 (23.54)	489 (19.25)	531.5 (20.93)

Terminal box type	H	AC	AD × B
gk 230	475 (18.00)	158 (6.22)	122 × 117 (4.80 × 4.61)
gk 420	490 (19.29)	175 (6.89)	162 × 162 (6.38 × 6.38)
gk 630	508 (20.00)	226 (8.90)	210 × 210 (8.27 × 8.27)

© Siemens AG 2017

Dimensional drawings

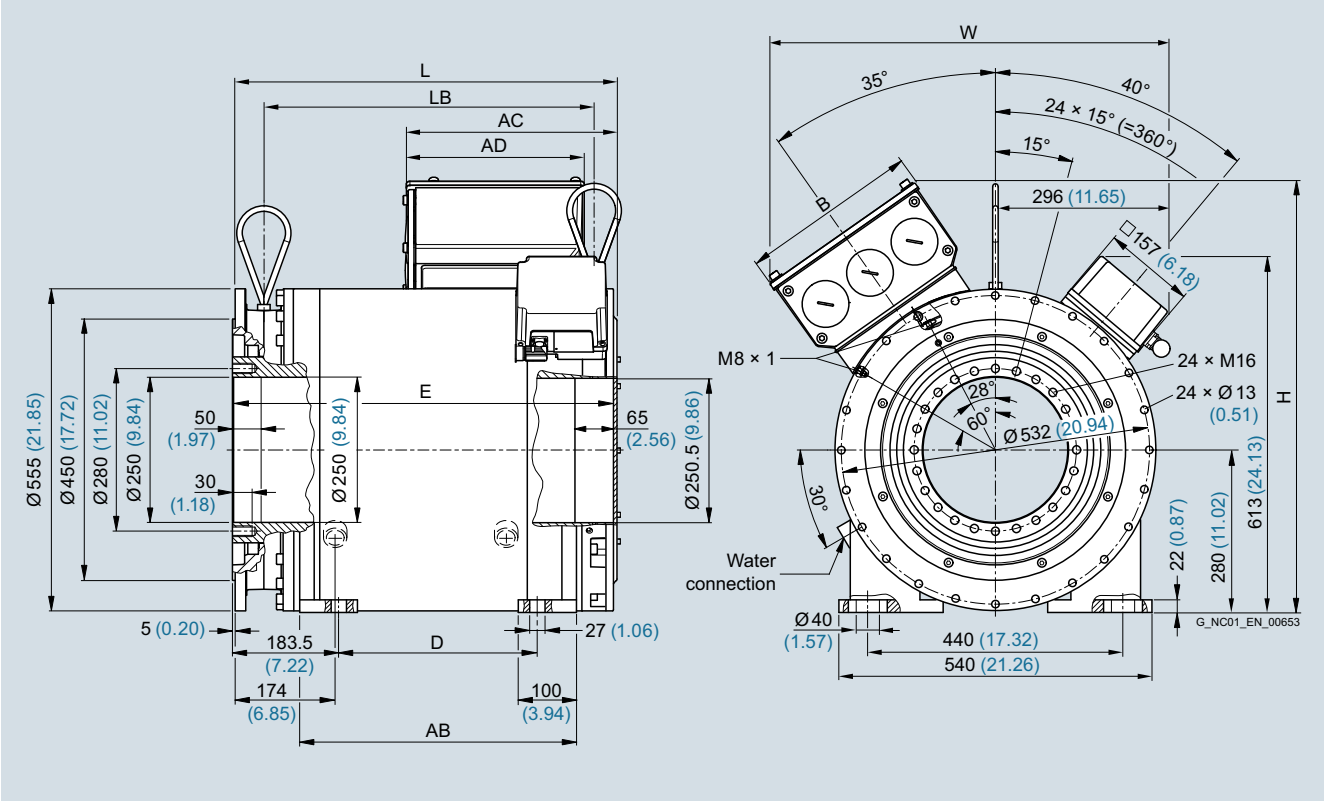

For motor		Dimensions in mm (inches)					
Shaft height	Type	IEC	L	LB	D	E	AB
SIMOTICS T-1FW3 complete torque motors, IM B35 type of construction, hollow shaft							
280	1FW3281		574 (22.60)	483.5 (19.04)	258 (10.16)	571 (22.48)	393 (15.47)
	1FW3283		658.5 (26.99)	568 (22.36)	342.5 (13.48)	655.5 (25.81)	477.5 (18.80)
	1FW3285		784.5 (30.98)	694 (27.32)	468.5 (18.44)	781.5 (30.77)	603.5 (23.76)
	1FW3287		953 (37.52)	862.5 (33.96)	637 (25.08)	950 (37.40)	772 (30.39)

Terminal box type	H	W	AC	AD × B
1XB7700	743 (29.95)	684 (26.93)	363 (14.29)	306 × 306 (12.05 × 12.05)
1XB7712 (axial DE)	836 (32.91)	764 (30.08)	354 (13.94)	371 × 370 (14.61 × 14.57)
1XB7712 (axial NDE)	836 (32.91)	764 (30.08)	385 (15.16)	371 × 370 (14.61 × 14.57)
1XB7712 (radial left)	846 (33.31)	751 (29.57)	369 (14.53)	371 × 370 (14.61 × 14.57)
1XB7712 (radial right)	828 (32.60)	777 (30.59)	369 (14.53)	371 × 370 (14.61 × 14.57)

© Siemens AG 2017

Dimensional drawings

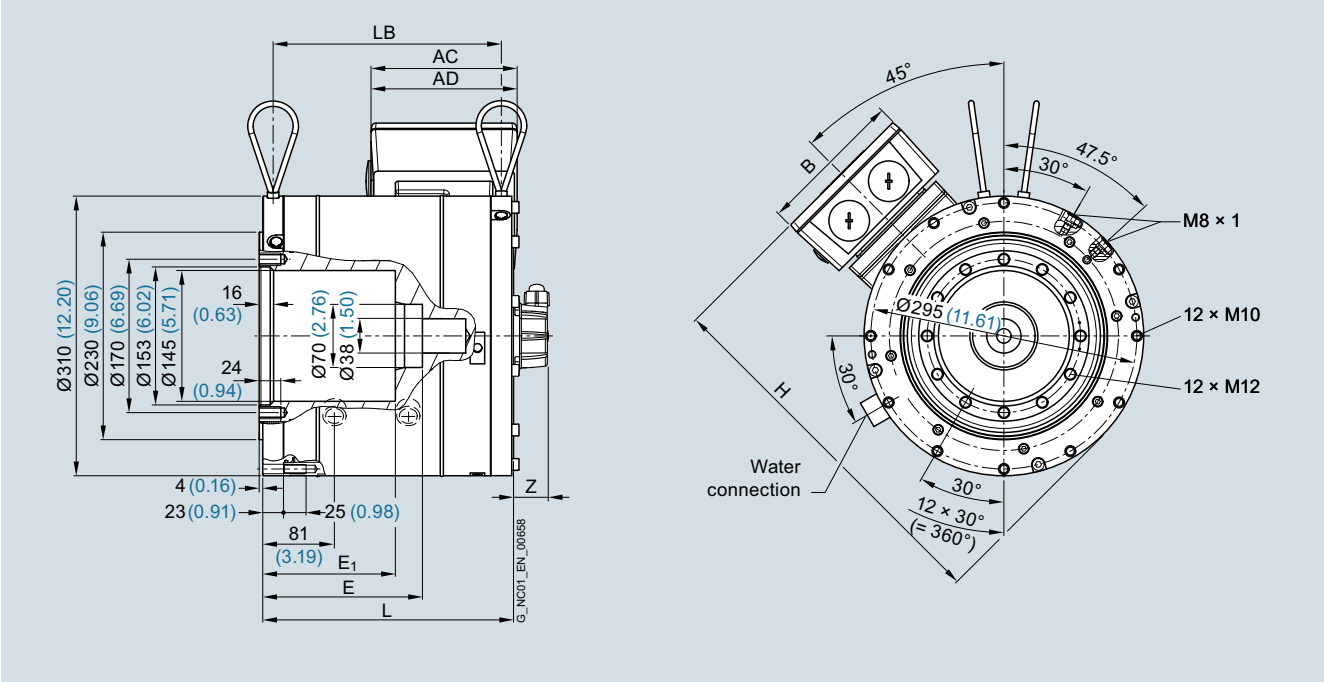

For motor		Dimensions in mm (inches)					
Shaft height	Type	IEC	L	LB	E	E_1	Z [1]
SIMOTICS T-1FW3 complete torque motors, plug-on installation performed by the customer, plug-on shaft							
150	1FW3150		248.5 (9.78)	223.5 (8.80)	151.5 (5.96)	121.5 (4.78)	38 (1.50)
	1FW3152		305.5 (12.03)	280.5 (11.04)	204.5 (8.05)	174.5 (6.88)	
	1FW3154		354.5 (13.96)	329.5 (12.97)	255 (10.04)	225 (8.86)	
	1FW3155		406.5 (16.00)	381.5 (15.02)	307 (12.09)	277 (10.91)	
	1FW3156		459.5 (18.09)	434.5 (17.11)	360 (14.17)	330 (12.99)	

Terminal box type	H	AC	AD × B
gk 230	393 (15.47)	140.5 (5.53)	122 × 117 (4.80 × 4.61)
gk 420	409 (16.10)	158 (6.22)	162 × 162 (6.38 × 6.38)
gk 630	427 (16.81)	206.5 (8.13)	210 × 210 (8.27 × 8.27)

[1] Encoder without DRIVE-CLiQ: 43 mm (1.69 in).

© Siemens AG 2017

Dimensional drawings

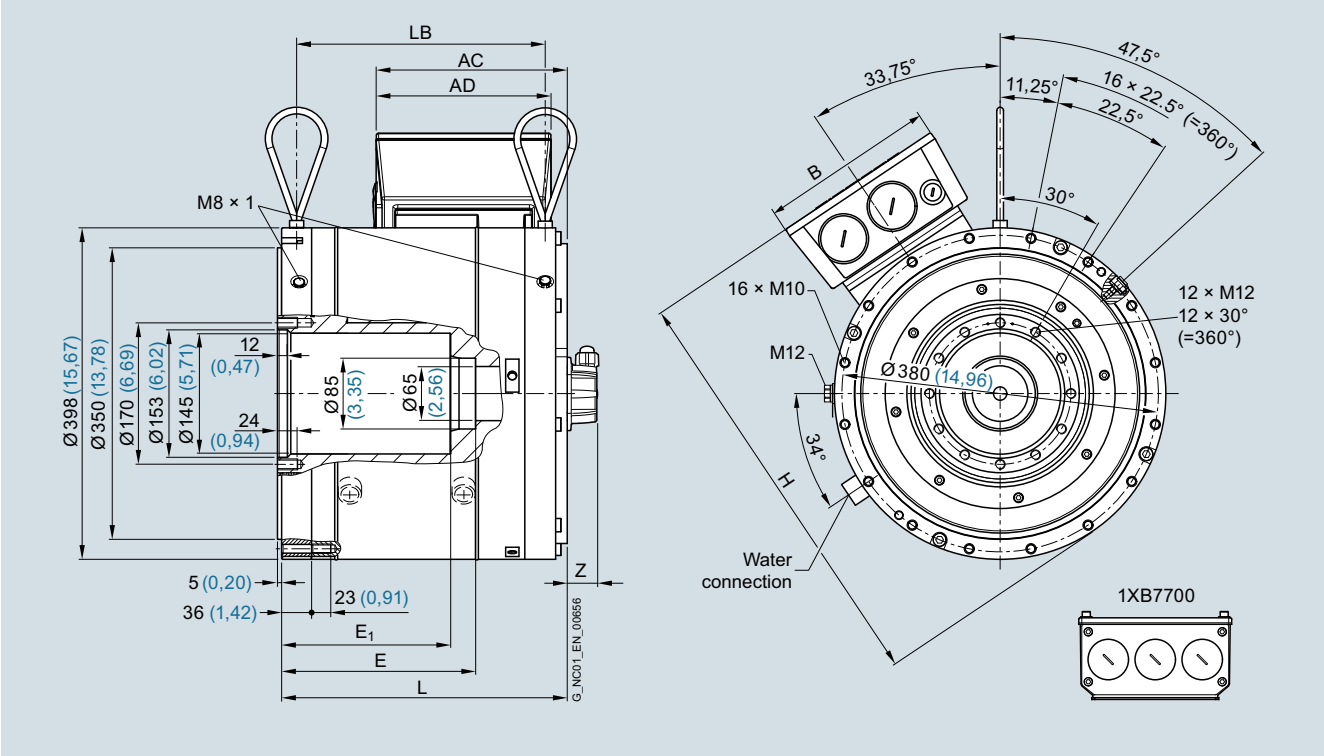

For motor		Dimensions in mm (inches)					
Shaft height	Type	IEC	L	LB	E	E_1	Z [1]
SIMOTICS T-1FW3 complete torque motors, plug-on installation performed by the customer, plug-on shaft							
200	1FW3201		250.5 (9.86)	206 (8.11)	145.5 (5.53)	115.5 (4.35)	36 (1.42)
	1FW3202		296.5 (11.67)	252 (9.92)	192 (7.36)	162 (6.18)	
	1FW3203		343 (13.50)	298.5 (11.75)	238 (9.17)	208 (7.99)	
	1FW3204		412 (16.22)	367.5 (14.47)	307 (11.89)	277 (10.71)	
	1FW3206		504.5 (19.86)	460 (18.11)	400 (15.55)	370 (14.37)	
	1FW3208		619.5 (24.39)	575 (22.74)	514.5 (20.06)	484.5 (18.88)	

Terminal box type	H	AC	AD × B
gk 230	475 (18.70)	161 (6.34)	122 × 117 (4.80 × 4.61)
gk 420	491 (19.33)	178.5 (7.03)	162 × 162 (6.38 × 6.38)
gk 630	507 (19.96)	229.5 (9.04)	210 × 210 (8.27 × 8.27)
1XB7700	580 (22.83)	307 (12.09)	306 × 306 (12.05 × 12.05)

[1] Encoder without DRIVE-CLiQ: 41 mm (1.61 in).

© Siemens AG 2017

Dimensional drawings

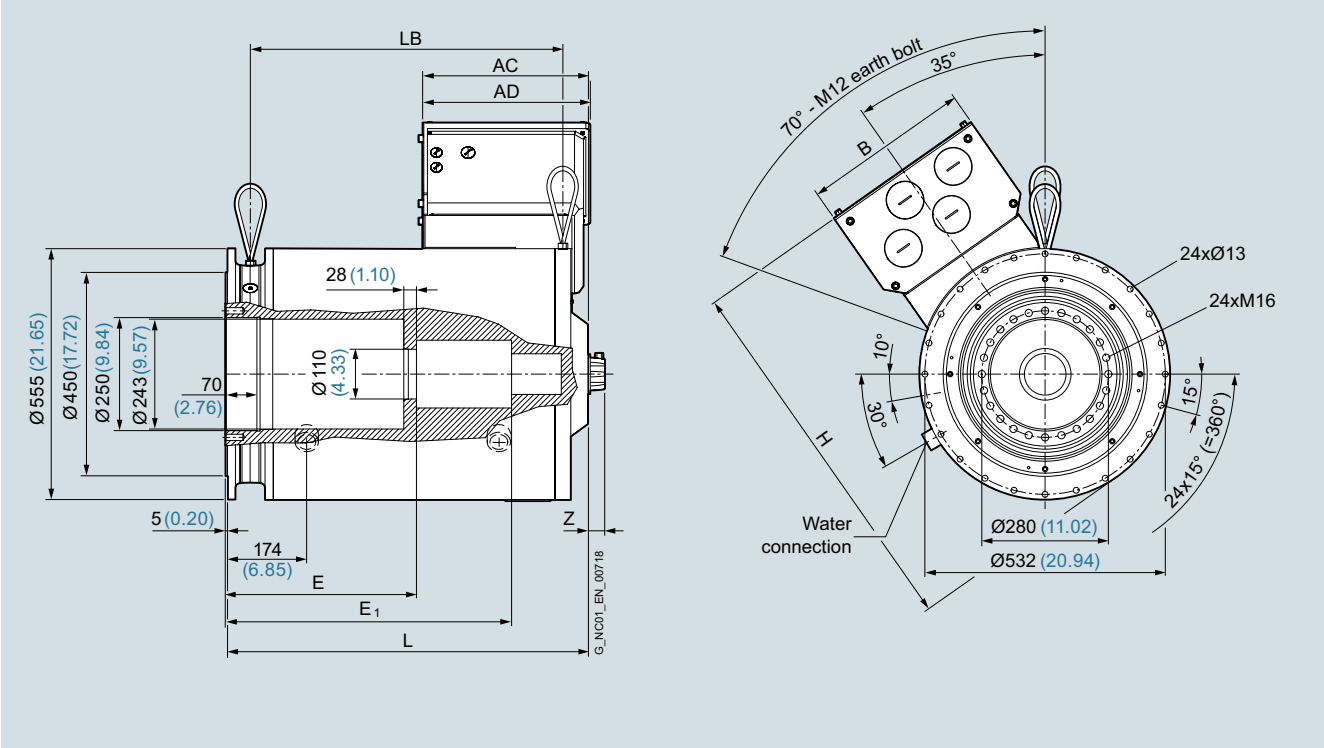

For motor		Dimensions in mm (inches)					
Shaft height	Type	IEC	L	LB	E	E_1	Z [1]
SIMOTICS T-1FW3 complete torque motors, plug-on installation performed by the customer, plug-on shaft							
280	1FW3281		588 (23.50)	481 (18.94)	313 (12.32)	423 (16.65)	36 (1.42)
	1FW3283		672.5 (26.48)	565.5 (22.26)	358 (14.09)	507.5 (19.98)	
	1FW3285		798.5 (31.44)	691.5 (27.22)	423 (16.65)	633.5 (24.94)	
	1FW3287		967 (38.07)	860 (33.86)	508 (29.00)	802 (31.57)	

Terminal box type	H	AC	AD × B
1XB7700	737 (29.02)	413 (16.26)	306 × 306 (12.05 × 12.05)
1XB7712 (axial DE)	827 (32.56)	404 (15.91)	371 × 370 (14.61 × 14.57)
1XB7712 (axial NDE)	827 (32.56)	435 (17.17)	371 × 370 (14.61 × 14.57)
1XB7712 (radial left)	827 (32.56)	419 (16.50) (16.50)	371 × 370 (14.61 × 14.57)
1XB7712 (radial right)	827 (32.56)	419 (16.50) (16.50)	371 × 370 (14.61 × 14.57)

[1] Encoder without DRIVE-CLiQ: 41 mm (1.61 in).

© Siemens AG 2017

Dimensional drawings

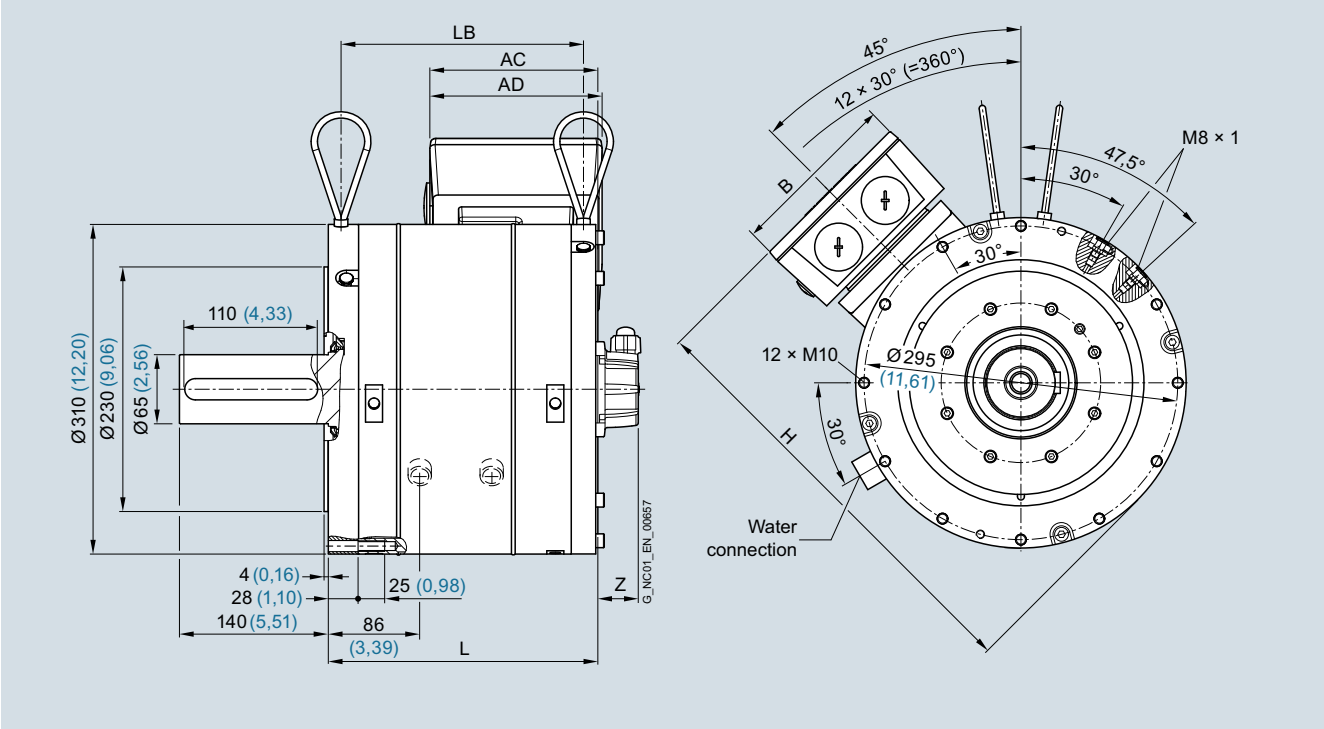

For motor		Dimensions in mm (inches)			
Shaft height	Type	IEC	L	LB	Z [1]
SIMOTICS T-1FW3 complete torque motors, IM B14 type of construction, solid shaft with/without feather key					
150	1FW3150		253.5 (9.98)	228 (8.98)	38 (1.50)
	1FW3152		283 (11.14)	257.5 (10.14)	
	1FW3154		338 (13.31)	312.5 (12.30)	
	1FW3155		386.5 (15.22)	361 (14.21)	
	1FW3156		440.5 (17.34)	415 (16.34)	

Terminal box type	H	AC	AD × B
gk 230	393 (15.47)	140.5 (5.53)	122 × 117 (4.80 × 4.61)
gk 420	409 (16.10)	158 (6.22)	162 × 162 (6.38 × 6.38)
gk 630	427 (16.81)	206.5 (8.13)	210 × 210 (8.27 × 8.27)

[1] Encoder without DRIVE-CLiQ: 43 mm (1.69 in).

© Siemens AG 2017

Dimensional drawings

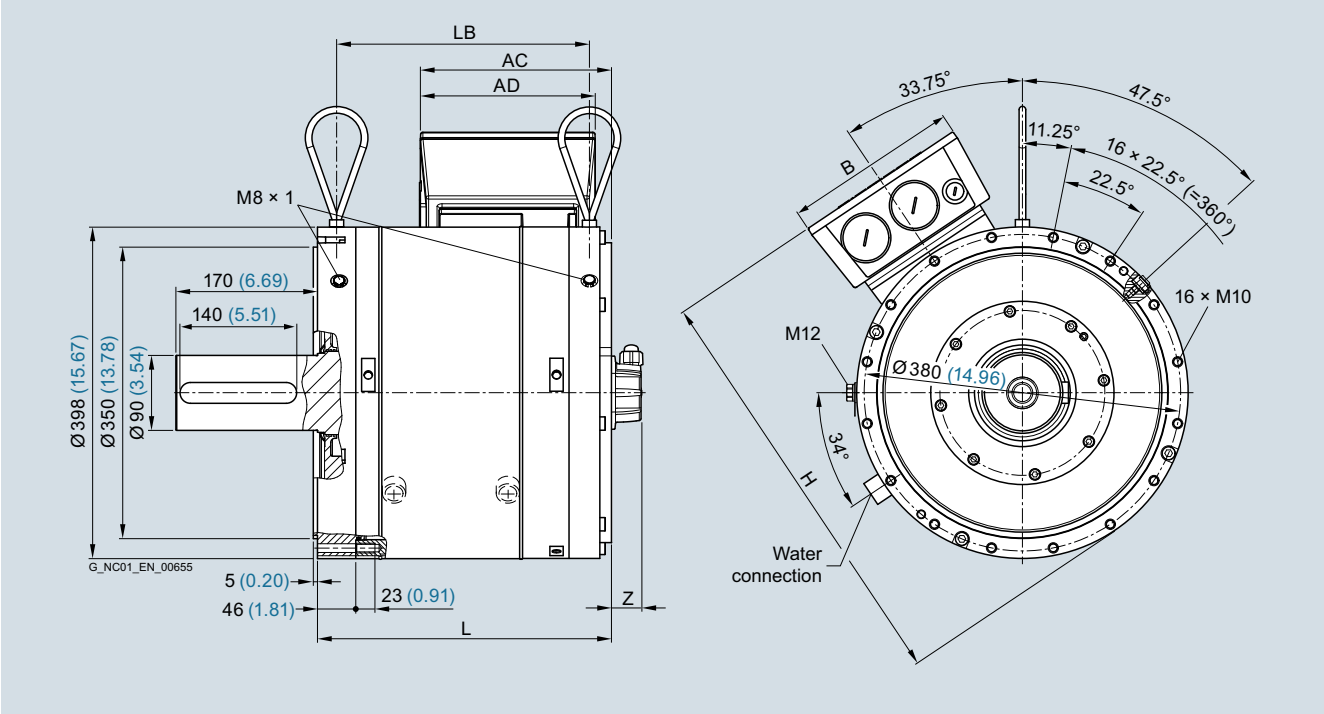

For motor		Dimensions in mm (inches)			
Shaft height	Type	IEC	L	LB	Z [1]
SIMOTICS T-1FW3 complete torque motors, IM B14 type of construction, solid shaft with/without feather key					
200	1FW3201		260.5 (10.26)	211 (8.31)	36 (1.42)
	1FW3202		306.5 (12.07)	257 (10.12)	
	1FW3203		353 (13.90)	303.5 (11.95)	
	1FW3204		422 (16.61)	372.5 (14.67)	
	1FW3206		514.5 (20.26)	465 (18.31)	
	1FW3208		629.5 (24.78)	580 (22.83)	

Terminal box type	H	AC	AD × B
gk 230	475 (18.70)	167 (6.57)	122 × 117 (4.80 × 4.61)
gk 420	491 (19.33)	178.5 (7.03)	162 × 162 (6.38 × 6.38)
gk 630	507 (19.96)	229.5 (9.04)	210 × 210 (8.27 × 8.27)
1XB7700	580 (22.83)	307 (12.09)	306 × 306 (12.05 × 12.05)

[1] Encoder without DRIVE-CLiQ: 41 mm (1.61 in).

© Siemens AG 2017

Dimensional drawings

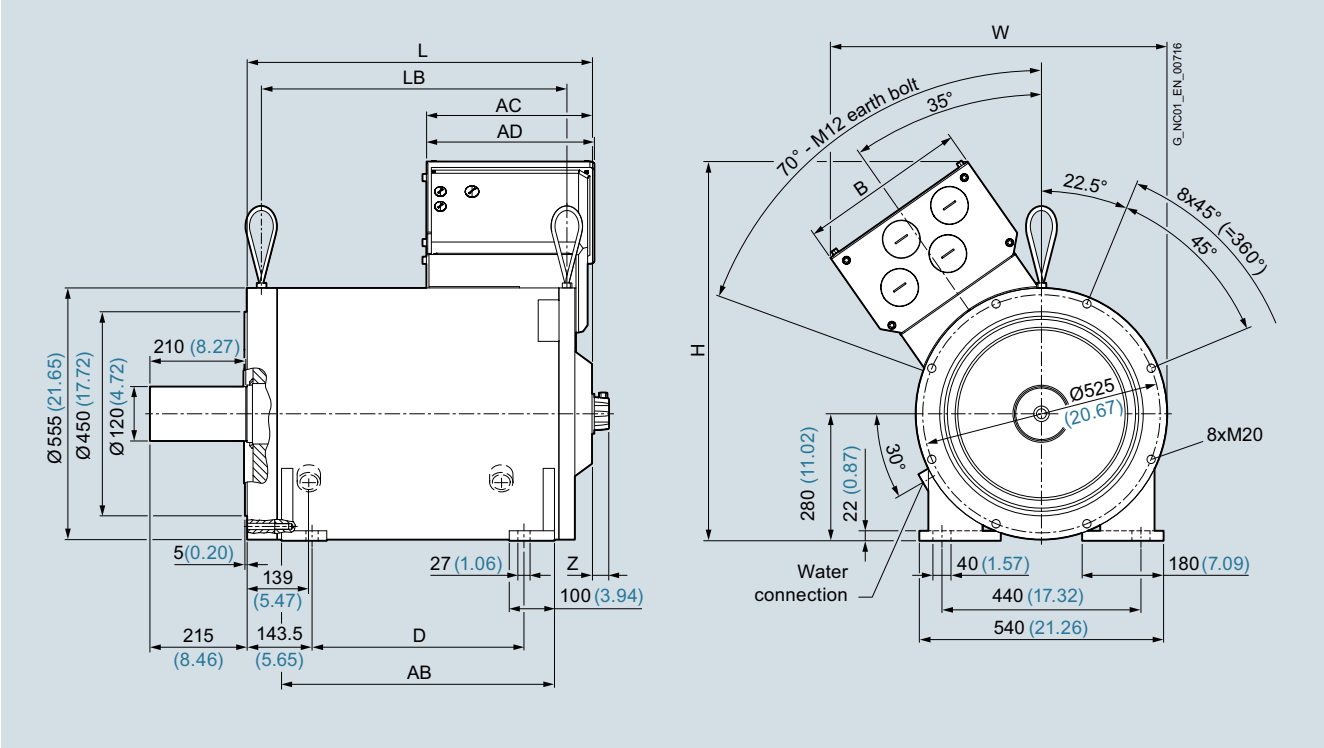

For motor		Dimensions in mm (inches)					
Shaft height	Type	IEC	L	LB	D	AB	Z
SIMOTICS T-1FW3 complete torque motors, IM B34 type of construction, solid shaft with/without feather key							
280	1FW3281		553 (21.77)	463.5 (18.25)	258 (10.16)	393 (15.47)	36 (1.42)
	1FW3283		637.5 (25.10)	548 (21.57)	342.5 (13.48)	477.5 (18.80)	
	1FW3285		763.5 (30.06)	674 (26.54)	468.5 (18.44)	603.5 (23.76)	
	1FW3287		932 (36.69)	842.5 (33.17)	637 (25.08)	772 (30.39)	

Terminal box type	H	W	AC	AD × B
1XB7700	742 (29.21)	665 (26.18)	377 (14.84)	306 × 306 (12.05 × 12.05)
1XB7712 (axial DE)	836 (32.91)	744 (29.29)	367 (14.45)	371 × 370 (14.61 × 14.57)
1XB7712 (axial NDE)	836 (32.91)	744 (29.29)	398 (15.67)	
1XB7712 (radial left)	846 (33.31)	732 (28.82)	382 (15.04)	
1XB7712 (radial right)	828 (32.60)	764 (30.08)	382 (15.04)	

[1] Encoder without DRIVE-CLiQ: 41 mm (1.61 in).

© Siemens AG 2017

Dimensional drawings

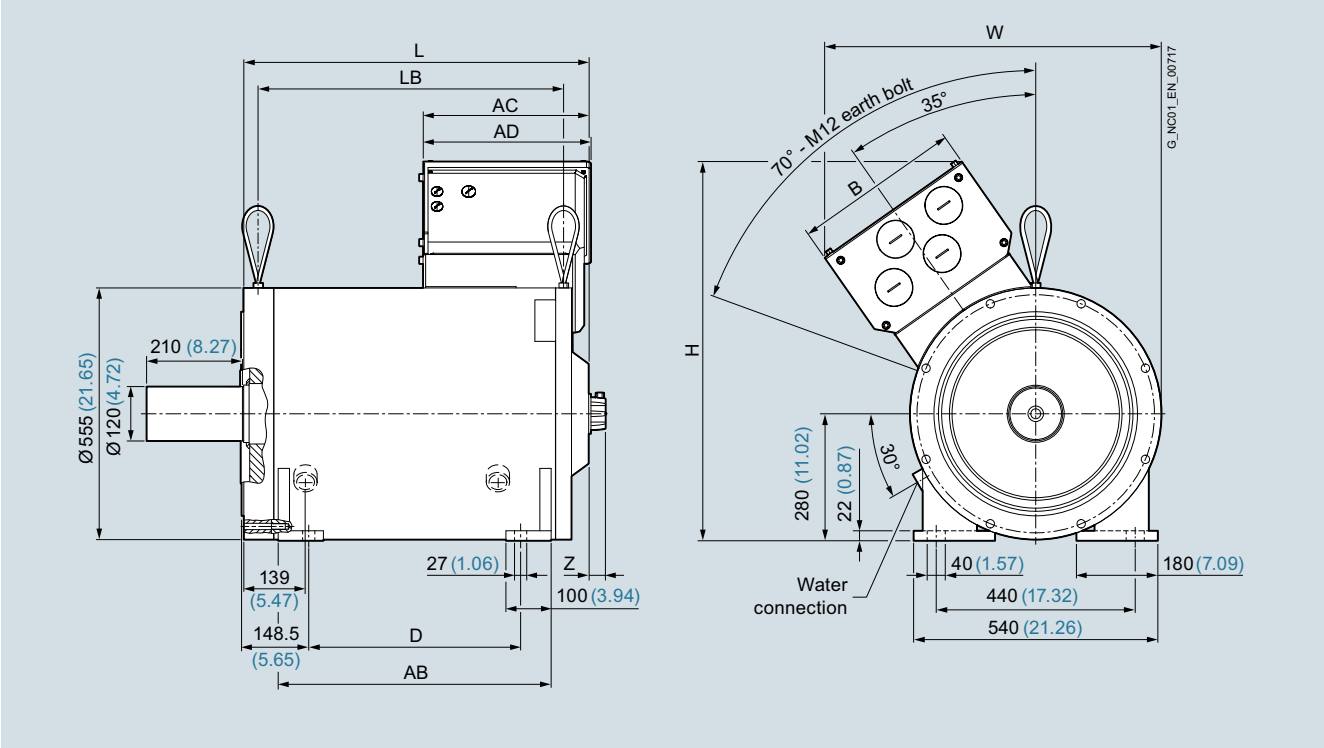

For motor		Dimensions in mm (inches)					
Shaft height	Type	IEC	L	LB	D	AB	Z [1]
SIMOTICS T-1FW3 complete torque motors, solid shaft, IM B3							
280	1FW3281		553 (21.77)	463.5 (18.25)	258 (10.16)	393 (15.47)	36 (1.42)
	1FW3283		637.5 (25.10)	548 (21.57)	342.5 (13.48)	477.5 (18.80)	
	1FW3285		763.5 (30.06)	674 (26.54)	468.5 (18.44)	603.5 (23.76)	
	1FW3287		932 (36.69)	842.5 (33.17)	637 (25.08)	772 (30.39)	

Terminal box type	H	W	AC	AD × B
1XB7700	742 (29.21)	665 (26.18)	377 (14.84)	306 × 306 (12.05 × 12.05)
1XB7712 (axial DE)	836 (32.91)	744 (29.29)	367 (14.45)	371 × 370 (14.61 × 14.57)
1XB7712 (axial NDE)	836 (32.91)	744 (29.29)	398 (15.67)	
1XB7712 (radial left)	846 (33.31)	732 (28.82)	382 (15.04)	
1XB7712 (radial right)	828 (32.60)	764 (30.08)	382 (15.04)	

[1] Encoder without DRIVE-CLiQ: 41 mm (1.61 in).

© Siemens AG 2017

11/2 Built-on optoelectronic rotary encoders
11/2 Introduction
11/4 Incremental encoders
11/4 Incremental encoder with sin/cos 1 V_{pp}
11/4 Incremental encoders with RS422 (TTL)
11/4 Incremental encoders with HTL
11/7 Absolute encoders
11/8 Absolute encoders with DRIVE-CLiQ
11/8 Absolute encoders with SSI
11/8 Absolute encoders with EnDat 2.1
11/10 Absolute encoders with PROFIBUS DP
11/10 Absolute encoders with PROFINET IO
11/13 Accessories
11/13 Couplings
11/13 Clamps
11/13 Signal connectors as mating connectors
11/13 MOTION-CONNECT DRIVE-CLiQ signal cables

Chap. 13 **CAD CREATOR**
Dimensional drawing and 2D/3D CAD generator
www.siemens.com/cadcreator

© Siemens AG 2017

Overview

Motion control encoder	Interface	Built-on encoder usable for Safety Integrated	Resolution S/R = signals/revolution	Accuracy arcsec	Cable length m (ft)	Degree of protection at housing (at shaft input)
Incremental encoders						
	sin/cos 1 V_{pp}	Yes	1000 ... 2500 S/R	± 18 mech. × 3600/ PPR count *z*	150 (492)	IP67 (IP64)
	RS422 (TTL)	[1]	500 ... 5000 S/R	± 18 mech. × 3600/ PPR count *z*	100 (328)	IP67 (IP64)
	HTL	[1]	100 ... 2500 S/R	± 18 mech. × 3600/ PPR count *z*	300 (984)	IP67 (IP64)
Absolute encoders						
	DRIVE-CLiQ	Yes	Single-turn 24 bit Multi-turn 36 bit (24 bit single-turn + 12-bit multi-turn)	± 20	100 (328)	IP67 (IP64)
	SSI	No	Single-turn 13 bit (8192 steps) Multi-turn 25 bit (8192 steps × 4096 revolutions)	± 60 (with 8192 steps)	100 (328)	IP67 (IP64)
	EnDat 2.1	Yes	Single-turn 13 bit (8192 steps) Multi-turn 25 bit (8192 steps × 4096 revolutions)	± 60 (incremental track)	150 (492)	IP67 (IP64)
	PROFIBUS DP-V2	No	Single-turn 13 bit (8192 steps) Multi-turn 27 bit (8192 steps × 16384 revolutions)	± 79 (with 8192 steps)	100 (328)	IP67 (IP64)
	PROFINET IO with RT/IRT	No	Single-turn 13 bit (8192 steps) Multi-turn 27 bit (8192 steps × 16384 revolutions)	± 79 (with 8192 steps)	100 (328)	IP67 (IP64)

Accessories for measuring systems

Couplings
Clamps
Signal connectors as mating connectors
MOTION-CONNECT DRIVE-CLiQ signal cables

[1] If you require information about the usability of motion control encoder measuring systems for Safety Integrated, please contact your local Siemens office.

© Siemens AG 2017

Overview (continued)

Incremental and absolute encoders with mounting accessories

Motion control encoders are optoelectronic built-on encoders that detect the traversing distances, angles of rotation, speeds or positions of machine axes. Motion control encoders are direct measuring systems that are built-on to shafts, axes or motors. They can be used in conjunction with numerical and programmable logic controllers, drives and position displays. Motion control encoders are system-tested, certified components that have been harmonized for use with the following systems:

- SINUMERIK CNC controls
- SIMOTION Motion Control Systems
- SIMATIC programmable logic controllers
- SINAMICS drive systems

Application

Motion control encoders are used with machine tools and production machines as additional external measuring systems. They are available as incremental or absolute encoders.

Incremental encoders

In the case of incremental encoders, the machine must travel to a reference point after each power-off state, as the position is not usually stored in the controller. Movements of the machine while the power is off are not recorded.

Incremental encoders are suitable for use in simple machine concepts with mostly small dimensions.

Absolute encoders

Absolute encoders, on the other hand, also record movements while the power is off and return the actual position after power on. Travel to a reference point is not necessary.

Absolute encoders are suitable for complex machines or machines with large dimensions.

Design

All motion control encoders are available in Synchro flange and clamp flange versions. The absolute encoders are also available with a hollow shaft and torque arm.

The motion control encoders are driven via a plug-in coupling or spring disk coupling. Alternatively, pulleys can also be used.

The motor control encoder supply voltage is 5 V DC or alternatively 10 V to 30 V DC. The 10 V to 30 V DC version supports longer cable lengths. Most control systems supply the voltage directly at the measuring circuit connector. With SINAMICS, the measuring systems are provided with power via the Sensor Modules.

For motion control encoders with cables, the cable length including the connector is 1 m (3.28 ft).

The following bending radii must be observed for the cable to the built-on encoder:

- One-time bending: ≥ 20 mm (0.79 in)
- Continuous bending: ≥ 75 mm (2.95 in)

Additional information

Power supply

The measuring systems fulfill the requirements of IEC 61010-1 only if power is supplied from a secondary circuit with limited energy acc. to IEC 61010-1$^{3rd\ Ed.}$, Section 9.4, or with limited power source acc. to
IEC 60950-1$^{2nd\ Ed.}$, Section 2.5, or from a Class 2 secondary circuit in accordance with UL 1310.
The corresponding sections of DIN EN 61010-1, EN 61010-1, UL 61010-1 and CAN/CSA-C22.2 No. 61010-1 can be used instead of IEC 61010-1$^{3rd\ Ed.}$, Section 9.4, and the corresponding sections of DIN EN 60950-1, EN 60950-1, UL 60950-1 and CAN/CSA-C22.2 No. 60950-1 can be used instead of
IEC 60950-1$^{2nd\ Ed.}$, Section 2.5.

© Siemens AG 2017

Function

Incremental encoder with sin/cos 1 V_{pp} and clamp flange incl. cable with connector as well as incremental encoder with RS422/HTL and Synchro flange

Incremental encoders detect relative movement and deliver a defined number of electrical pulses per revolution, which represent the measurement of the traveled distance or angle.

Incremental encoders operate on the principle of optoelectronic scanning of dividing discs with the transmitted light principle. The light source is a light emitting diode (LED). The light-dark modulation generated as the encoder shaft rotates is picked up by photoelectronic elements. With an appropriate arrangement of the line pattern on the dividing disk connected to the shaft and the fixed aperture, the photoelectronic elements provide two trace signals A and B at 90° to one another, as well as a reference signal R.

The encoder electronics amplify these signals and convert them to different output levels.

Signal levels

The following signal levels are available for the incremental encoders:

Signal level	Benefits
Analog signals sin/cos with level 1 V_{pp}	The analog signal allows the digitization of the trace signals. In order to obtain a fine resolution, the signals are interpolated in the higher-level controller.
RS422 differential signals (TTL)	The resolution can be quadrupled by means of edge evaluation.
HTL (High Voltage Transistor Logic)	Built-on encoders with an HTL interface are designed for applications with digital inputs with a 24 V level. The resolution can be quadrupled by means of edge evaluation.

Technical specifications

Article No.		6FX2001-3....	6FX2001-2....	6FX2001-4...0
Product name		Motion control encoder	Motion control encoder	Motion control encoder
Product designation		Incremental encoder with sin/cos 1 V_{pp}	Incremental encoder with RS422 (TTL)	Incremental encoder with HTL
Operating voltage DC V_p on encoder	V	5 ± 10 %	5 ± 10 % or 10 ... 30	10 ... 30
Limit frequency, typical	kHz	≥ 180 (- 3 dB) ≥ 450 (- 6 dB)	–	–
Scanning frequency, maximum	kHz	–	300	300
No-load current consumption, maximum	mA	150	150	150
Resolution, maximum	S/R	2500	5000	2500
Signal level		Sinusoidal 1 V_{pp}	RS422 (TTL)	V_H ≥ 21 V with I_H = 20 mA at 24 V V_L ≤ 2.8 V with I_L = 20 mA at 24 V
Outputs protected against short-circuit to 0 V		Yes Briefly	Yes	Yes Briefly
Switching time (10 … 90 %) rise/fall time t_+/t_- (for 1 m (3.28 ft) cable and recommended input circuit)	ns	–	≤ 50	≤ 200
Phase angle, signal A to B Edge spacing	Degrees	90 ± 10	90	90
• At 300 kHz	µs	–	≥ 0.45	≥ 0.45
Cable length to downstream electronics, maximum [1]	m (ft)	150 (492)	100 (328) without fault signal 50 (164) with fault signal	300 (984)
Accuracy	arcsec	± 18 mech. × 3600/PPR count z	± 18 mech. × 3600/PPR count z	± 18 mech. × 3600/PPR count z
LED failure monitoring		–	High-resistance driver	High-resistance driver
Maximum mechanical speed	rpm	12000	12000	12000
Starting torque at 20 °C (68 °F)	Nm (lb_f-ft)	≤ 0.01 (0.01)	≤ 0.01 (0.01)	≤ 0.01 (0.01)

S/R = signals/revolution

[1] With recommended cable and input circuitry of the downstream electronics, observe max. permissible cable length of module to be evaluated.

© Siemens AG 2017

Technical specifications (continued)

Article No.		6FX2001-3....	6FX2001-2....	6FX2001-4...0
Product name		Motion control encoder	Motion control encoder	Motion control encoder
Product designation		Incremental encoder with sin/cos 1 V_{pp}	Incremental encoder with RS422 (TTL)	Incremental encoder with HTL
Shaft loading capacity				
• $n \leq 6000$ rpm				
- Axial	N (lb_f)	40 (8.99)	40 (8.99)	40 (8.99)
- Radial at shaft extension	N (lb_f)	60 (13.5)	60 (13.5)	60 (13.5)
• $n > 6000$ rpm				
- Axial	N (lb_f)	10 (2.25)	10 (2.25)	10 (2.25)
- Radial at shaft extension	N (lb_f)	20 (4.50)	20 (4.50)	20 (4.50)
Shaft diameter				
• Synchro flange	mm (in)	6 (0.24)	6 (0.24)	6 (0.24)
• Clamp flange	mm (in)	10 (0.39)	10 (0.39)	10 (0.39)
Shaft length				
• Synchro flange	mm (in)	10 (0.39)	10 (0.39)	10 (0.39)
• Clamp flange	mm (in)	20 (0.79)	20 (0.79)	20 (0.79)
Angular acceleration, maximum	rad/s^2	10^5	10^5	10^5
Moment of inertia of rotor	kgm^2 (lb_f-in-s^2)	$\leq 2.9 \times 10^{-6}$ (2.57×10^{-5})	$\leq 2.9 \times 10^{-6}$ (2.57×10^{-5})	$\leq 2.9 \times 10^{-6}$ (2.57×10^{-5})
Vibration (55 ... 2000 Hz) according to EN 60068-2-6	m/s^2 (ft/s^2)	≤ 300 (984)	≤ 300 (984)	≤ 300 (984)
Shock according to EN 60068-2-27				
• 6 ms	m/s^2 (ft/s^2)	≤ 2000 (6562)	≤ 2000 (6562)	≤ 2000 (6562)
Degree of protection				
• At housing		IP67	IP67	IP67
• At shaft input		IP64	IP64	IP64
Ambient temperature during				
Operation				
• Flange outlet or fixed cable				
- At V_p = 5 V ± 10 %	°C (°F)	-40 ... +100 (-40 ...+212)	-40 ... +100 (-40 ...+212)	-40 ... +100 (-40 ...+212)
- At V_p = 10 ... 30 V	°C (°F)	–	-40 ... +70 (-40 ... +158)	–
• Flexible cable				
- At V_p = 5 V ± 10 %	°C (°F)	-10 ... +100 (+14 ... +212)	-10 ... +100 (+14 ... +212)	-10 ... +100 (+14 ... +212)
- At V_p = 10 ... 30 V	°C (°F)	–	-10 ... +70 (+14 ... +158)	–
Net weight	kg (lb)	0.3 (0.66)	0.3 (0.66)	0.3 (0.66)
EMC		EMC Directive 2014/30/EC and regulations of EMC directives (applicable basic standards)		
Certificate of suitability		CE, CSA, UL	CE, CSA, UL	CE, CSA, UL

© Siemens AG 2017

Selection and ordering data

Description	Article No.
Incremental encoder with sin/cos 1 V_{pp}	
5 V DC supply voltage	
• Synchro flange and connection via	
- Axial flange outlet	**6FX2001-3G■■■**
- Radial flange outlet	**6FX2001-3E■■■**
- Cable 1 m (3.28 ft) with connector[1)]	**6FX2001-3C■■■**
Resolution	
1000 S/R	**B 0 0**
1024 S/R	**B 0 2**
2500 S/R	**C 5 0**
Incremental encoder with RS422 (TTL)	
5 V DC supply voltage	
• Synchro flange and connection via	
- Axial flange outlet	**6FX2001-2G■■■**
- Radial flange outlet	**6FX2001-2E■■■**
- Cable 1 m (3.28 ft) with connector [1)]	**6FX2001-2C■■■**
• Clamp flange and connection via	
- Axial flange outlet	**6FX2001-2R■■■**
- Radial flange outlet	**6FX2001-2P■■■**
- Cable 1 m (3.28 ft) with connector [1)]	**6FX2001-2M■■■**
10 ... 30 V DC supply voltage	
• Synchro flange and connection via	
- Axial flange outlet	**6FX2001-2H■■■**
- Radial flange outlet	**6FX2001-2F■■■**
- Cable 1 m (3.28 ft) with connector [1)]	**6FX2001-2D■■■**
• Clamp flange and connection via	
- Axial flange outlet	**6FX2001-2S■■■**
- Radial flange outlet	**6FX2001-2Q■■■**
- Cable 1 m (3.28 ft) with connector [1)]	**6FX2001-2N■■■**
Resolution	
500 S/R	**A 5 0**
1000 S/R	**B 0 0**
1024 S/R	**B 0 2**
1250 S/R	**B 2 5**
1500 S/R	**B 5 0**
2000 S/R	**C 0 0**
2048 S/R	**C 0 4**
2500 S/R	**C 5 0**
3600 S/R	**D 6 0**
5000 S/R	**F 0 0**

S/R = Signals/Revolution

Description	Article No.
Incremental encoder with HTL	
10 ... 30 V DC supply voltage	
• Synchro flange and connection via	
- Axial flange outlet	**6FX2001-4H■■0**
- Radial flange outlet	**6FX2001-4F■■0**
- Cable 1 m (3.28 ft) with connector[1)]	**6FX2001-4D■■0**
• Clamp flange and connection via	
- Axial flange outlet	**6FX2001-4S■■0**
- Radial flange outlet	**6FX2001-4Q■■0**
- Cable 1 m (3.28 ft) with connector[1)]	**6FX2001-4N■■0**
Resolution	
100 S/R	**A 1**
500 S/R	**A 5**
1000 S/R	**B 0**
2500 S/R	**C 5**

[1)] Universal integrated cable outlet for axial and radial outlet direction.

© Siemens AG 2017

Function

Absolute encoders with SSI/EnDat and PROFIBUS DP (top), and DRIVE-CLiQ and PROFINET IO (bottom)

Absolute encoders output an absolute angular position between 0° and 360°. They operate on the same scanning principle as incremental encoders, but have a greater number of tracks. For example, if there are 13 tracks, then 2^{13} = 8192 steps are coded in the case of single-turn encoders. The code used is a one-step code (gray code). This prevents any scanning errors from occurring. After switching on the machine, the position value is transferred immediately to the controller, travel to a reference point is not necessary.

All absolute encoders are available in single-turn and multi-turn versions.

Single-turn encoders

Single-turn encoders divide one rotation (360 degrees mechanical) into a specific number of steps, e.g. 8192. A unique code word is assigned to each position. After 360° the position values are repeated.

Multi-turn encoders

Multi-turn encoders record the number of revolutions in addition to the absolute position within one revolution. To do this, further code discs which are coupled via gear steps with the encoder shaft are scanned. When evaluating 12 additional tracks, this means that an additional 2^{12} = 4096 revolutions can be coded.

Interfaces

The following interfaces are supported by the absolute encoders:

Interface	Benefits
DRIVE-CLiQ	• Very high data transfer rates possible • Advantages in time-critical applications • Simple and quick automatic configuration using electronic rating plates • Fast and easy diagnostics with a single tool • One interface for connecting drives as well as indirect and direct measurement systems to the CNC.
SSI	• Advantages in time-critical applications
EnDat 2.1	• High data transfer rate, bidirectional • Advantages in time-critical applications • Incremental encoder sin/cos 1 V_{pp} • Connection via SINAMICS Sensor Modules SMC/SME
PROFIBUS DP-V2	• Parameterizable built-on encoder • Reduced wiring overhead in plants with a large number of encoders • Isochronous operation and direct data exchange
PROFINET IO	• Parameterizable built-on encoder • Reduced wiring overhead in plants with a large number of encoders • Supports RT and IRT operating modes • IRT (isochronous mode) • 2 ports

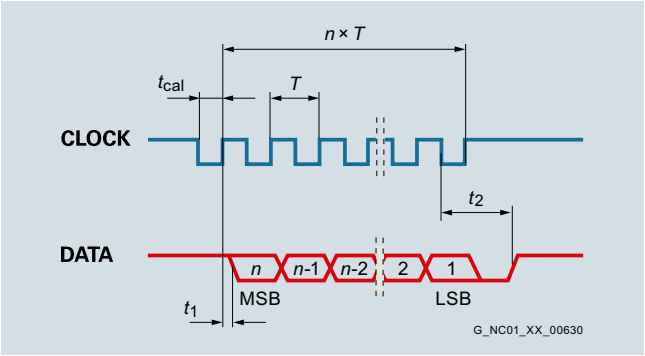

Data transfer for absolute encoders with SSI interface

n = data word length (13 bits for single-turn and 25 bits for multi-turn)
T = 1 ... 10 µs
t_{cal} = ≤ 5 µs
t_1 = ≤ 0.4 µs (without cable)
t_2 = 17 ... 20 µs

© Siemens AG 2017

Technical specifications

Article No.		6FX2001-5.D..-1AA0	6FX2001-5.S..	6FX2001-5.E..
Product name		Motion control encoder	Motion control encoder	Motion control encoder
Product designation		Absolute encoder with DRIVE-CLiQ	Absolute encoder with SSI	Absolute encoder with EnDat 2.1
Operating voltage DC V_p on encoder	V	24 - 15 % + 20 %	4.75 ... 30	3.6 ... 14
Current consumption, approx.				
• Single-turn	mA	37	90	90
• Multi-turn	mA	43	120	120
Interface		DRIVE-CLiQ	SSI	EnDat 2.1
Clock input		–	Differential cable receiver acc. to EIA standard RS 485	Differential cable receiver acc. to EIA standard RS 485
Data output		DRIVE-CLiQ	Differential cable driver acc. to EIA standard RS 485	Differential cable driver acc. to EIA standard RS 485
Short-circuit strength		Yes	Yes	Yes
Transfer rate	Mbit/s	100	–	–
Transfer rate	kHz	–	100 ... 1000	100 ... 2000
Maximum speed				
• Electrical	rpm	14000	–	–
- At ± 1 bit accuracy	rpm	–	5000	5000
- At ± 12 bit accuracy	rpm	12000	–	–
- At ± 100 bit accuracy	rpm	–	12000	12000
• Mechanical				
- Single-turn	rpm	15000	15000	15000
- Multi-turn	rpm	12000	12000	12000
Cable length to downstream electronics, maximum [1]	m (ft)	100 (328)	–	–
• Up to 300 kHz cycle	m (ft)	–	100 (328)	150 (492)
• Up to 1 MHz cycle	m (ft)	–	50 (164)	50 (164)
• Up to 2 MHz cycle	m (ft)	–	–	10 (32.8)
Connection		Radial flange outlet M12	Axial/radial flange outlet M23	Axial/radial flange outlet M23
Resolution				
• Single-turn	bit	24	13 (8192 steps)	13 (8192 steps)
• Multi-turn	bit	36 (24 bit single-turn + 12 bit multi-turn)	25 (8192 steps × 4096 revolutions)	25 (8192 steps × 4096 revolutions)
Frame				
• Single-turn	bit	–	13 without parity	According to EnDat specification
• Multi-turn	bit	–	25 without parity	According to EnDat specification
Incremental track	S/R	2048, 1 V_{pp} (internal only)	–	512, 1 V_{pp}
Code type				
• Transfer		DRIVE-CLiQ	Gray, fir tree format	Dual
Parameterization capability				
• Preset		–	Set to zero	–
• Counting direction		–	Yes	–
Accuracy	arcsec	± 20	± 60 (with 8192 steps)	± 60 (incremental track)
Starting torque at 20 °C (68 °F)	Nm (lb_f-ft)	≤ 0.01 (0.01)	≤ 0.01 (0.01)	≤ 0.01 (0.01)

S/R = signals/revolution

[1] Observe the max. permissible cable length of the connected module.

© Siemens AG 2017

Technical specifications (continued)

Article No.		6FX2001-5.D..-1AA0	6FX2001-5.S..	6FX2001-5.E..
Product name		Motion control encoder	Motion control encoder	Motion control encoder
Product designation		Absolute encoder with DRIVE-CLiQ	Absolute encoder with SSI	Absolute encoder with EnDat 2.1
Solid shaft loading capacity				
• $n \leq 6000$ rpm				
- Axial	N (lb_f)	40 (8.99)	40 (8.99)	40 (8.99)
- Radial at shaft extension	N (lb_f)	60 (13.5)	60 (13.5)	60 (13.5)
• $n > 6000$ rpm				
- Axial	N (lb_f)	10 (2.25)	10 (2.25)	10 (2.25)
- Radial at shaft extension	N (lb_f)	20 (4.50)	20 (4.50)	20 (4.50)
Shaft diameter				
• Synchro flange	mm (in)	6 (0.24) with flat face	6 (0.24)	6 (0.24)
• Clamp flange	mm (in)	10 (0.39) with flat face	10 (0.39)	10 (0.39)
• Torque arm Hollow shaft	mm (in)	10 (0.39) or 12 (0.47)	–	–
Shaft length				
• Synchro flange	mm (in)	10 (0.39)	10 (0.39)	10 (0.39)
• Clamp flange	mm (in)	20 (0.79)	20 (0.79)	20 (0.79)
Angular acceleration, maximum	rad/s^2	10^5	10^5	10^5
Moment of inertia of rotor				
• Solid shaft	kgm^2 (lb_f-in-s^2)	2.9×10^{-6} (2.57×10^{-5})	2.9×10^{-6} (2.57×10^{-5})	2.9×10^{-6} (2.57×10^{-5})
• Hollow shaft	kgm^2 (lb_f-in-s^2)	4.6×10^{-6} (4.07×10^{-5})	–	–
Vibration (55 ... 2000 Hz) according to EN 60068-2-6				
• Solid shaft	m/s^2 (ft/s^2)	≤ 300 (984)	≤ 300 (984)	≤ 300 (984)
• Hollow shaft	m/s^2 (ft/s^2)	≤ 150 (492)	–	–
Shock according to EN 60068-2-27				
• 6 ms				
- Solid shaft	m/s^2 (ft/s^2)	≤ 2000 (6562)	≤ 2000 (6562)	≤ 2000 (6562)
- Hollow shaft	m/s^2 (ft/s^2)	≤ 1000 (3281)	–	–
Degree of protection				
• At housing		IP67	IP67	IP67
• At shaft input		IP64	IP64	IP64
Ambient temperature during				
• Operation	°C (°F)	-30 ... +100 (-22 ...+212)	-40 ... +100 (-40 ...+212)	-40 ... +100 (-40 ...+212)
Net weight				
• Single-turn	kg (lb)	0.35 (0.77)	0.35 (0.77)	0.35 (0.77)
• Multi-turn	kg (lb)	0.35 (0.77)	0.35 (0.77)	0.35 (0.77)
EMC		EMC Directive 2014/30/EC and regulations of EMC directives (applicable basic standards)		
Certificate of suitability		CE, CSA, UL	CE, CSA, UL	CE, CSA, UL

© Siemens AG 2017

Technical specifications (continued)

Article No.		6FX2001-5.P..	6FX2001-5.N..
Product name		Motion control encoder	Motion control encoder
Product designation		Absolute encoder with PROFIBUS DP	Absolute encoder with PROFINET IO
Operating voltage DC V_p on encoder	V	10 ... 30	10 ... 30
Current consumption, approx.			
• Single-turn	mA	300 ... 100 (2.5 W)	400 ... 130 (4 W)
• Multi-turn	mA	300 ... 100 (2.5 W)	400 ... 130 (4 W)
Interface		PROFIBUS DP-V2	PROFINET IO with RT/IRT
Clock input		Differential cable receiver acc. to EIA standard RS 485	2 ports IRT
Data output		Differential cable driver acc. to EIA standard RS 485	2 ports IRT
Short-circuit strength		Yes	Yes
Transfer rate	Mbit/s	12	100
LED for diagnostics		Green/red	Green/red/yellow
Maximum speed			
• Electrical			
- At ± 1 bit accuracy	rpm	5800	5800
• Mechanical			
- Single-turn	rpm	12000	12000
- Multi-turn	rpm	6000	6000
Cable length to downstream electronics, maximum [1]			
• Up to 93.75 kbit/s	m (ft)	1200 (3937)	–
• Up to 1.5 Mbit/s	m (ft)	200 (656)	–
• Up to 12 Mbit/s	m (ft)	100 (328)	100 (328)
Number of nodes		99	–
Connection		Terminal block with address selector switch and bus terminating resistor in removable cover with radial cable glands (3 units)	2 × M12 connectors, 4-pole for PROFINET ports 1 × M12 connector, 4-pole for operating voltage
• Cable diameter	mm (in)	6.5 ... 9 (0.26 ... 0.35) Removal of cover possible without interrupting bus	–
Resolution			
• Single-turn	bit	13 (8192 steps)	13 (8192 steps)
• Multi-turn	bit	27 (8192 steps × 16384 revolutions)	27 (8192 steps × 16384 revolutions)
Frame		According to PNO encoder profile V 4.1 Class 1, Class 2, Class 3, Class 4 Standard frame 81	According to PNO encoder profile V 4.1 Class 1, Class 2, Class 3, Class 4 Standard frames 81/82/83/84 Siemens frame 860
Code type			
• Sampling		Gray	Gray
• Transfer		Binary, PROFIBUS	Binary, PROFINET
Bus load, approx.			
• At 12 Mbit/s per encoder	µs	20	–
Cycle time	ms	1	1 ... 100
Parameterization capability			
• Resolution per revolution		1 ... 8192	1 ... 8192
• Total resolution		1 ... 134217728	1 ... 134217728
• Preset		Yes	Yes
• Counting direction		Yes	Yes
• Velocity signal		Yes	Yes
• Limit switches		Yes, 2 units	No
• Isochronous mode		Yes	Yes
• Direct data exchange		Yes	No

[1] Observe the max. permissible cable length of the connected module.

© Siemens AG 2017

Technical specifications (continued)

Article No.		6FX2001-5.P..	6FX2001-5.N..
Product name		Motion control encoder	Motion control encoder
Product designation		Absolute encoder with PROFIBUS DP	Absolute encoder with PROFINET IO
Online parameterization		Yes	Yes
PNO certificate		Yes	Yes
Supported profiles		PNO encoder profile V 4.1	PNO encoder profile V 4.1
Accuracy with 8192 steps	arcsec	± 79 (± ½ LSB)	± 79 (± ½ LSB)
Friction torque at 20 °C (68 °F)	Nm (lb_f-ft)	≤ 0.03 (0.02)	≤ 0.03 (0.02)
Starting torque at 20 °C (68 °F)	Nm (lb_f-ft)	≤ 0.03 (0.02)	≤ 0.03 (0.02)
Shaft loading capacity			
• n ≤ 6000 rpm			
- Axial	N (lb_f)	40 (8.99)	40 (8.99)
- Radial at shaft extension	N (lb_f)	110 (24.7)	110 (24.7)
• n > 6000 rpm			
- Axial	N (lb_f)	10 (2.25)	10 (2.25)
- Radial at shaft extension	N (lb_f)	20 (4.50)	20 (4.50)
Shaft diameter			
• Synchro flange	mm (in)	6 (0.24)	6 (0.24)
• Clamp flange	mm (in)	10 (0.39)	10 (0.39)
Torque arm Hollow shaft [1]	mm (in)	15 (0.59)	15 (0.59)
Shaft length			
• Synchro flange	mm (in)	10 (0.39)	10 (0.39)
• Clamp flange	mm (in)	20 (0.79)	20 (0.79)
Angular acceleration, maximum	rad/s^2	10^5	10^5
Moment of inertia of rotor			
• Solid shaft	kgm^2 (lb_f-in-s^2)	1.90×10^{-6} (1.68×10^{-5})	1.90×10^{-6} (1.68×10^{-5})
• Hollow shaft	kgm^2 (lb_f-in-s^2)	2.80×10^{-6} (2.47×10^{-5})	2.80×10^{-6} (2.47×10^{-5})
Vibration (55 ... 2000 Hz) according to EN 60068-2-6	m/s^2 (ft/s^2)	≤ 100 (328)	≤ 100 (328)
Shock according to EN 60068-2-27			
• 2 ms	m/s^2 (ft/s^2)	≤ 2000 (6562)	≤ 2000 (6562)
• 6 ms	m/s^2 (ft/s^2)	≤ 1000 (3281)	≤ 1000 (3281)
Degree of protection			
• At housing		IP67	IP67
• At shaft input		IP64	IP64
Ambient temperature during			
• Operation	°C (°F)	-40 ... +85 (-40 ... +185)	-40 ... +85 (-40 ... +185)
Net weight			
• Single-turn	kg (lb)	0.4 (0.88)	0.4 (0.88)
• Multi-turn	kg (lb)	0.5 (1.1)	0.5 (1.1)
EMC		EMC Directive 2014/30/EC and regulations of EMC directives (applicable basic standards)	
Certificate of suitability		CE, CSA, UL	CE, CSA, UL

[1] Hollow shaft diameter 12 mm, 10 mm or 8 mm (0.47 in, 0.39 in or 0.31 in) possible using supplied reduction sleeves.

© Siemens AG 2017

Selection and ordering data

Description	Article No.
Absolute encoders with DRIVE-CLiQ	
24 V DC supply voltage	
• Radial connection	
- Synchro flange Solid shaft	**6FX2001-5FD ■■-1AA0**
- Clamp flange Solid shaft	**6FX2001-5QD ■■-1AA0**
- Torque arm Hollow shaft diameter 10 mm (0.39 in)	**6FX2001-5VD ■■-1AA0**
- Torque arm Hollow shaft diameter 12 mm (0.47 in)	**6FX2001-5WD ■■-1AA0**
Resolution	
• Single-turn 24 bit	**1 3**
• Multi-turn 36 bit	**2 5**
Absolute encoders with SSI	
4.75 ... 30 V DC supply voltage	
• Synchro flange and connection via	
- Axial flange outlet	**6FX2001-5HS ■■**
- Radial flange outlet	**6FX2001-5FS ■■**
• Clamp flange and connection via	
- Axial flange outlet	**6FX2001-5SS ■■**
- Radial flange outlet	**6FX2001-5QS ■■**
Resolution	
• Single-turn 8192 steps/revolution (13 bit)	**1 2**
• Multi-turn 8192 steps/revolution, 4096 revolutions (25 bit)	**2 4**
Absolute encoders with EnDat 2.1	
3.6 ... 14 V DC supply voltage	
• Synchro flange and connection via	
- Axial flange outlet	**6FX2001-5HE ■■**
- Radial flange outlet	**6FX2001-5FE ■■**
• Clamp flange and connection via	
- Axial flange outlet	**6FX2001-5SE ■■**
- Radial flange outlet	**6FX2001-5QE ■■**
Resolution	
• Single-turn 8192 steps/revolution (13 bit)	**1 3**
• Multi-turn 8192 steps/revolution, 4096 revolutions (25 bit)	**2 5**

Description	Article No.
Absolute encoders with PROFIBUS DP	
10 ... 30 V DC supply voltage	
• Radial connection	
- Synchro flange Solid shaft	**6FX2001-5FP ■■**
- Clamp flange Solid shaft	**6FX2001-5QP ■■**
- Torque arm Hollow shaft diameter 15 mm (0.59 in) [1]	**6FX2001-5WP ■■**
Resolution	
• Single-turn 8192 steps/revolution (13 bit)	**1 2**
• Multi-turn 8192 steps/revolution, 16384 revolutions (27 bit)	**2 4**
Absolute encoders with PROFINET IO	
10 ... 30 V DC supply voltage	
• Radial connection	
- Synchro flange Solid shaft	**6FX2001-5FN ■■**
- Clamp flange Solid shaft	**6FX2001-5QN ■■**
- Torque arm Hollow shaft diameter 15 mm (0.59 in) [1]	**6FX2001-5WN ■■**
Resolution	
• Single-turn 8192 steps/revolution (13 bit)	**1 3**
• Multi-turn 8192 steps/revolution, 16384 revolutions (27 bit)	**2 5**

Additional information

Since the DRIVE-CLiQ interface has been disclosed, it is possible to use absolute encoders with integrated DRIVE-CLiQ interface from a range of different manufacturers.

You can find additional information on the Internet at:

https://support.industry.siemens.com/cs/document/65402168

[1] Hollow shaft diameter 12 mm, 10 mm or 8 mm (0.47 in, 0.39 in or 0.31 in) possible using supplied reduction sleeves.

© Siemens AG 2017

Overview

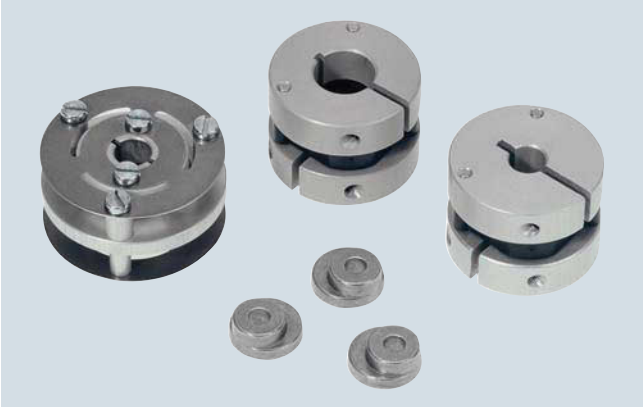

Couplings and clamps

Couplings

The motion control encoders are driven via a plug-in coupling or spring disk coupling. Alternatively, pulleys can also be used.

Clamps

Motion control encoders with Synchro flange can be axially mounted on the machine with screws or secured with 3 clamps.

Signal connectors as mating connectors

A signal connector is available as a mating connector for motion control encoders with flange outlet or with cable and connector.

The mating connector with 12 contacts is suitable for all incremental encoders.

The mating connector with 17 contacts is suitable for absolute encoders with EnDat.

Signal connector

A signal connector is available as a replacement for motion control encoders with cable and connector.

MOTION-CONNECT DRIVE-CLiQ signal cables

Pre-assembled MOTION-CONNECT DRIVE-CLiQ signal cables with M12 plug are available as basic cables and extensions for connecting motion control encoders with DRIVE-CLiQ interface.

For further information about the signal cables, refer to "MOTION-CONNECT connection systems".

Technical specifications

Article No.		6FX2001-7KF06	6FX2001-7KF10	6FX2001-7KS06	6FX2001-7KS10
Product designation		Spring disk coupling	Spring disk coupling	Plug-in coupling	Plug-in coupling
Diameter					
• 1st shaft diameter	mm (in)	6 (0.24)	6 (0.24)	6 (0.24)	10 (0.39)
• 2nd shaft diameter	mm (in)	5 (0.20)	6 (0.24)	6 (0.24)	10 (0.39)
Transferable torque, maximum	Nm (lb_f-ft)	0.8 (0.59)	0.8 (0.59)	0.7 (0.52)	0.7 (0.52)
Maximum mechanical speed	rpm	12000	12000	12000	12000
Center offset of shafts, maximum	mm (in)	0.4 (0.02)	0.4 (0.02)	0.5 (0.02)	0.5 (0.02)
Axial displacement	mm (in)	0.4 (0.02)	0.4 (0.02)	0.5 (0.02)	0.5 (0.02)
Angular displacement of shafts, maximum	°	3	3	1	1
Rigidity					
• Radial	Nm/rad (lb_f-ft/rad)	150 (111)	150 (111)	31 (22.9)	31 (22.9)
• Axial	N/mm (lb_f/mm)	6 (1.35)	6 (1.35)	10 (2.25)	10 (2.25)
Moment of inertia	$kgcm^2$ (lb_f-in-s^2)	0.019 (1.68 x 10^{-5})	0.019 (1.68 x 10^{-5})	0.02 (1.77 x 10^{-5})	0.02 (1.77 x 10^{-5})
Ambient temperature during					
• Operation	°C (°F)	-40 ... +150 (-40 ... +302)	-40 ... +150 (-40 ... +302)	-40 ... +80 (-40 ... +176)	-40 ... +80 (-40 ... +176)
Outer diameter	mm (in)	30 (1.18)	30 (1.18)	25 (0.98)	25 (0.98)
Length	mm (in)	18.3 (0.72)	18.3 (0.72)	19 (0.75)	19 (0.75)
Net weight	g (oz)	16 (0.56)	16 (0.56)	20 (0.7)	20 (0.7)

Article No.		6FX2001-7KP01
Product designation		Clamp
Outer diameter		
• 1st clamp diameter	mm (in)	9 (0.35)
• 2nd clamp diameter	mm (in)	12 (0.47)
Clamp hole diameter	mm (in)	3.2 (0.13)
Height	mm (in)	5.5 (0.22)
Net weight	g (oz)	3 (0.1)

© Siemens AG 2017

Selection and ordering data

Description	Article No.
Spring disk coupling	
For shaft diameter:	
• 6 mm/6 mm (0.24 in/0.24 in)	**6FX2001-7KF10**
• 6 mm/5 mm (0.24 in/0.20 in)	**6FX2001-7KF06**
Plug-in coupling	
For shaft diameter:	
• 6 mm/6 mm (0.24 in/0.24 in)	**6FX2001-7KS06**
• 10 mm/10 mm (0.39 in/0.39 in)	**6FX2001-7KS10**
Clamp (1 unit)	**6FX2001-7KP01**
For built-on encoder with Synchro flange (3 units are required.)	
Signal connector with cap nut (1 unit)	**6FX2003-0SU12**
Mating connector for incremental encoder with sin/cos 1 V_{pp}, RS422 (TTL) and HTL and absolute encoder with SSI	
12-pole, insulator each with 12 socket contacts 0.08 ... 0.22 mm^2 and 0.20 ... 0.56 mm^2, 2 × cable clamping 6.5 ... 10 mm (0.26 ... 0.39 in) and 10.1 ... 13 mm (0.40 ... 0.51 in)	
Signal connector with cap nut (1 unit)	**6FX2003-0SU17**
Mating connector for absolute encoder with EnDat	
17-pole, insulator with 17 socket contacts 0.20 ... 0.56 mm^2, 2 × cable clamping 6.5 ... 10 mm (0.26 ... 0.39 in) and 10.1 ... 13 mm (0.40 ... 0.51 in)	
Signal connector with external thread for encoders with cable (1 unit)	**6FX2003-0SA12**
Replacement connector for incremental encoders with sin/cos 1 V_{pp}, RS422 (TTL) and HTL	
12-pole, insulator with 12 pin contacts 0.20 ... 0.56 mm^2, 2 × cable clamping 6.5 ... 10 mm (0.26 ... 0.39 in) and 10.1 ... 13 mm (0.40 ... 0.51 in)	

Description	Article No.
Power connecting cable	
Pre-assembled cable for power supply of the absolute encoders with PROFINET IO with M12 plug connector and M12 plug socket, A-coded, 4-pin	
• Length 2 m (6.56 ft)	**6XV1801-5DH20**
• Length 3 m (9.84 ft)	**6XV1801-5DH30**
• Length 5 m (16.4 ft)	**6XV1801-5DH50**
• Length 10 m (32.8 ft)	**6XV1801-5DN10**
• Length 15 m (49.2 ft)	**6XV1801-5DN15**
IE connecting cable	
Pre-assembled signal cable for absolute encoders PROFINET IO with M12 plug connector and RJ45, D-coded, 4-pole	
• Length 2 m (6.56 ft)	**6XV1871-5TH20**
• Length 3 m (9.84 ft)	**6XV1871-5TH30**
• Length 5 m (16.4 ft)	**6XV1871-5TH50**
• Length 10 m (32.8 ft)	**6XV1871-5TN10**
• Length 15 m (49.2 ft)	**6XV1871-5TN15**
IE FC RJ45 Plug 145 (1 unit)	**6GK1901-1BB30-0AA0**
2 × 2 RJ45 connector with rugged metal enclosure and FC connection technology, 145° cable outlet	
IE FC M12 Plug PRO (1 unit)	**6GK1901-0DB20-6AA0**
M12 connector with metal enclosure and FC connection technology, axial cable outlet, D-coded	
IE POWER M12 CABLE CONNECTOR PRO (3 units)	**6GK1907-0DC10-6AA3**
Connection socket for connecting SCALANCE W-700/X208pro for 24 V DC supply voltage, 4-pole, A-coded, including assembly instructions	
IE FC TP Trailing Cable 2 × 2 (PROFINET Type C)	**6XV1840-3AH10**
4-wire, shielded, PROFINET-compliant, TP installation cable for use in cable carriers,	
sold by the meter Max. length 2000 m (6562 ft) Minimum order 20 m (65.6 ft)	
MOTION-CONNECT DRIVE-CLiQ signal cable [1]	**6FX.002-2DC3.-1..0**
For encoder systems with DRIVE-CLiQ and M12 connection	

[1] For complete Article No. and length code, refer to "MOTION-CONNECT connection systems".

© Siemens AG 2017

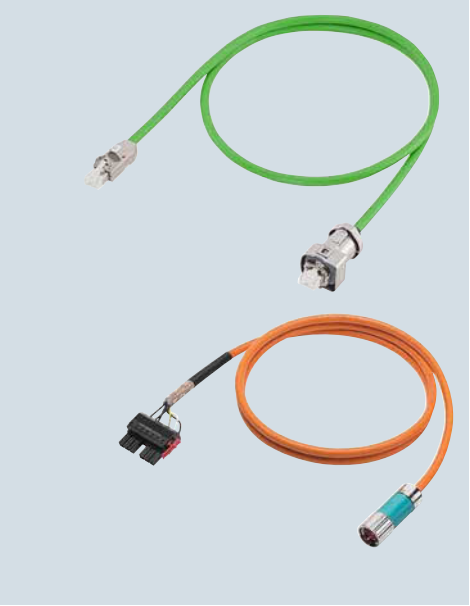

12/2 **Overview**

12/4 **Introduction**

12/7 **Power cables for SINAMICS S120**
Power cables for SIMOTICS S-1FT7/S-1FK7/M-1PH8 motors
12/9 with SPEED-CONNECT connector
12/12 with full-thread connector
12/15 Extensions for power cables with SPEED-CONNECT connector or full-thread connector
Power cables for motors
12/16 SIMOTICS M-1PH8 with terminal box
12/19 SIMOTICS L-1FN3
12/20 SIMOTICS T-1FW3
12/21 SIMOTICS T-1FW6

12/7 **Hybrid cables for SINAMICS S120M**
12/22 Hybrid cables for SINAMICS S120M distributed servo drive

12/23 **Signal cables for SINAMICS S120**
DRIVE-CLiQ signal cables
12/26 without 24 V DC cores
12/27 MOTION CONNECT with 24 V DC cores
Signal cables for motors
12/30 with SPEED-CONNECT connector
12/31 with full-thread connector

12/33 **Article number code**
12/33 Power cables
12/35 Signal cables
12/36 Length code

12/37 **Connection overviews**
12/37 SINAMICS S120 CU320-2 Control Unit
12/38 SIMOTION D4x5-2 Control Unit
12/40 SINAMICS S120 Motor Modules
12/45 SINAMICS S120M distributed servo drive
12/46 SINAMICS S120 Power Modules
12/49 SINAMICS S120 Sensor Modules Cabinet-Mounted
12/51 SIMOTICS S-1FT7/-1FK7 motors with DRIVE-CLiQ interface
12/52 External measuring systems with DRIVE-CLiQ interface

12/53 **Accessories for power and signal cables**
12/53 Power and signal connectors
12/54 Mounting flange
12/54 HF (high-frequency) clamp
12/55 DRIVE-CLiQ cabinet bushing (RJ45)
12/55 DRIVE-CLiQ cabinet bushing (M12)
12/56 DRIVE-CLiQ coupler

Chap. 13 **Drive Technology Configurator**
Product selection tool
www.siemens.com/dt-configurator

Chap. 13 **CAD CREATOR**
Dimensional drawing and 2D/3D CAD generator
www.siemens.com/cadcreator

© Siemens AG 2017

MOTION-CONNECT connection systems
Overview

Power cables

Cable	For motor	MOTION-CONNECT 500	MOTION-CONNECT 800PLUS	Page
Dynamic requirements	SIMOTICS	Medium	High	
Environmental requirements		Medium	High	
UL/CSA		✔	✔	
Halogen-free		–	✔	
RoHS		✔	✔	
Power cables with SPEED-CONNECT connector				
	S-1FT7	✔	✔	**12/9, 12/10**
	S-1FK7	✔	✔	**12/11**
	M-1PH808 M-1PH810	✔	✔	**12/9**
Power cables with full-thread connector				
	S-1FT7	✔	✔	**12/12 ... 12/14**
	S-1FK7	✔	✔	**12/14**
	M-1PH808 M-1PH810 M-1PH813	✔	✔	**12/12, 12/14**
	L-1FN3	–	✔	**12/19**
	T-1FW6	–	✔	**12/21**
Extensions for power cables with SPEED-CONNECT or full-thread connector				
	S-1FT7	✔	✔	**12/15**
	S-1FK7	✔	✔	**12/15**
	M-1PH808 M-1PH810 M-1PH813	✔	✔	**12/15**
	L-1FN3	–	✔	**12/19**
	T-1FW6	–	✔	**12/21**
Power cables for motors with terminal box				
	M-1PH8	✔ from 35 mm^2	✔ up to 16 mm^2	**12/16, 12/17**
	T-1FW3	✔	✔ up to 16 mm^2	**12/20**

Hybrid cables for SINAMICS S120M distributed servo drive

Cable	For distributed servo drive	MOTION-CONNECT 800PLUS	Page
Dynamic requirements	SINAMICS S120M	High	
Environmental requirements		High	
UL/CSA		✔	
Halogen-free		✔	
RoHS		✔	
Hybrid cables			
	6FX8002-7HY	✔	**12/22**

✔ = Possible
– = Not possible

© Siemens AG 2017

Cable	For motor	MOTION-CONNECT 500	MOTION-CONNECT 800PLUS	Page
Dynamic requirements	SIMOTICS	Medium	High	
Environmental requirements		Medium	High	
UL/CSA		✔	✔	
Halogen-free		–	✔	
RoHS		✔	✔	
MOTION-CONNECT DRIVE-CLiQ signal cables				
	S-1FT7	✔	✔	**12/27**
	S-1FK7	✔	✔	**12/27**
	M-1PH8	✔	✔	**12/27**
	L-1FN3	✔	✔	**12/27**
	T-1FW3	✔	✔	**12/27**
	T-1FW6	✔	✔	**12/27**
DRIVE-CLiQ signal cables and extensions for connecting non-Siemens direct measuring systems				
	Non-Siemens direct measuring systems with DRIVE-CLiQ interface	✔	✔	**12/28**
DRIVE-CLiQ signal cables with M17 connection				
	S-1FT7	✔	✔	**12/29**
	S-1FK7	✔	✔	**12/29**
Signal cables with SPEED-CONNECT connector				
	S-1FT7	✔	✔	**12/30**
	S-1FK7	✔	✔	**12/30**
	M-1PH8	✔	✔	**12/30**
Signal cables with full-thread connector				
	S-1FK7	✔	✔	**12/31**
	M-1PH8	✔	✔	**12/31**
	L-1FN3	–	✔	**12/31**
	T-1FW3	✔	✔	**12/31**
	T-1FW6	–	✔	**12/31**
Extensions for signal cables with SPEED-CONNECT and full-thread connector				
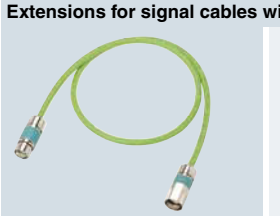		✔	✔	**12/30, 12/31**
Signal cables with full-thread connector				
	for temperature sensor	–	✔	**12/32**

✔ = Possible
– = Not possible

© Siemens AG 2017

General information

Overview

MOTION-CONNECT cables are suitable for use with many different types of machine tools and production machinery.

The following variants of MOTION-CONNECT cable are available as fully-assembled power and signal cables or sold by the meter:

- **MOTION-CONNECT 500**
  - Cost-effective solution for predominantly fixed installation
  - Suitable for low mechanical loading
  - Tested for travel distances up to 5 m (16.4 ft)
- **MOTION-CONNECT 800PLUS**
  - Meets requirements for use in cable carriers
  - Suitable for high mechanical loading
  - Oil resistance
  - Tested for travel distances of up to 50 m (164 ft)

Benefits

Pre-assembled MOTION-CONNECT cables provide high quality and perfect, system-tested functionality.

SPEED-CONNECT

Fast, stable and reliable connections can be made with the new, pre-assembled cables with SPEED-CONNECT connectors. With a short rotation as far as the stop, the cap nut of the connector secures the connection.

The cables with SPEED-CONNECT connectors supplement the previous offering of MOTION-CONNECT cables with full-thread connectors.

Application

MOTION-CONNECT cables are intended for use in machines. They are not suitable for building technology applications or outdoor installation.

MOTION-CONNECT cables have been tested in a cable carrier with horizontal travel distance and have also been designed for this type of application. They are not self-supporting.

The pre-assembled cables can be ordered in length units of 10 cm (3.94 in) and can be extended, if necessary.

When cable lengths (basic cables and extensions) are determined for the systems and applications described in this catalog, the technically permissible maximum cable lengths (e.g., 25 m (82 ft)) specified in the catalog must be observed. Malfunctions can occur if longer cables are used.

Siemens assumes no liability for correct transmission of signals or power in this case.

Compatibility between SPEED-CONNECT and full-thread connectors:

Connector on motor with external thread	Connector with cap nut on cable	Compatibility
SPEED-CONNECT	SPEED-CONNECT	✔
SPEED-CONNECT	Full-thread	✔
Full-thread	Full-thread	✔
Full-thread	SPEED-CONNECT	–

Function

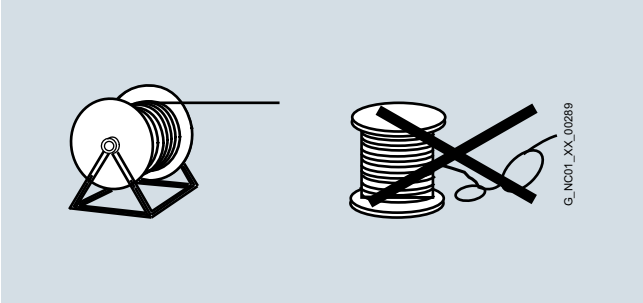

The cables must be removed from the drum without twisting, i.e., the cables must be unwound and must never be lifted over the drum flange in loops.

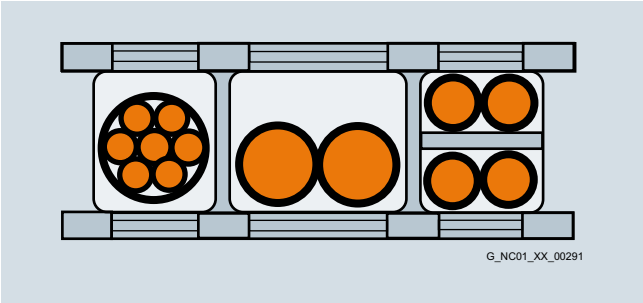

To maximize the service life of the cable carrier and cables, cables in the carrier made from different materials must be separated by spacers in the cable carrier. The spacers must be filled evenly to ensure that the position of the cables does not change during operation. The cables should be distributed as symmetrically as possible according to their weights and dimensions. Cables with very different outer diameters should also be separated by spacers.

When inserting pre-assembled cables into the cable carrier, do **not** pull at the connector, as this may damage the strain relief or cable clamping.

The cables must not be fixed in the cable carrier. They must be freely movable.

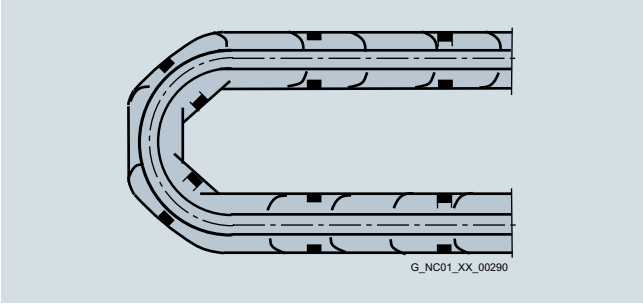

The cables must be able to be moved without applying force in particular in the bending radii of the carrier. The specified minimum bending radii must be adhered to.

The cable fixings must be attached at both ends at an appropriate distance away from the end points of the moving parts in a dead zone.

© Siemens AG 2017

Function (continued)

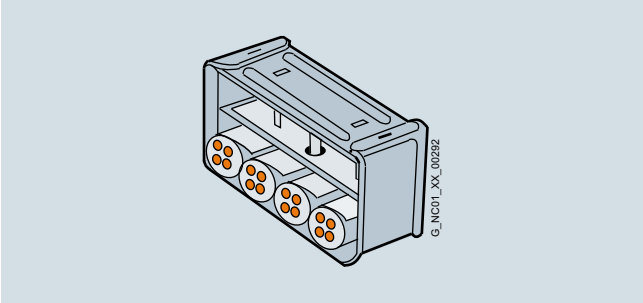

MOTION-CONNECT cables are tested in a cable carrier. The cables are attached at one end by means of strain relief to the moving ends of the cable carrier. Strain relief is applied over a wide area of the cable jacket surface without crimping the cable.

Cables must be installed in accordance with the instructions supplied by the cable carrier manufacturer.

Note:

If, for example, pre-assembled cables are installed in a cable carrier in such a way that the connector would inhibit assembly, pre-assembled cables without assembled connectors can also be supplied (power and signal cables [1]). In this case, the contacts of the cables are crimped and the connector is supplied separately. After installing the cables, the customer assembles the connector.

In case of vibration load and with horizontal or vertical cable entries, we recommend that the cable is additionally fixed if between the cable strain relief on the cable carrier and the terminal at the motor part of the cable is hanging loose or is not routed. To prevent machine vibrations being transmitted to the connectors, the cable should be fixed at the moving part where the motor is mounted.

Representation in connection overviews

Symbol	Explanation
	Connector with pin contacts
	Connector with socket contacts
	Exposed core ends
	Cable must be supplied by the customer

Characteristic curves

The shaded area beneath the characteristic represents the potential range of use for the cables. The characteristics represent the tested operating points.

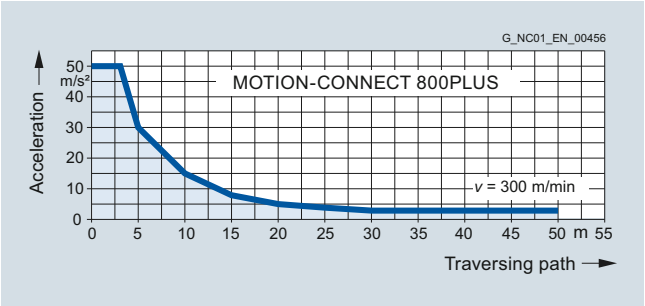

Acceleration for MOTION-CONNECT 800PLUS signal and power cables up to 16 mm²

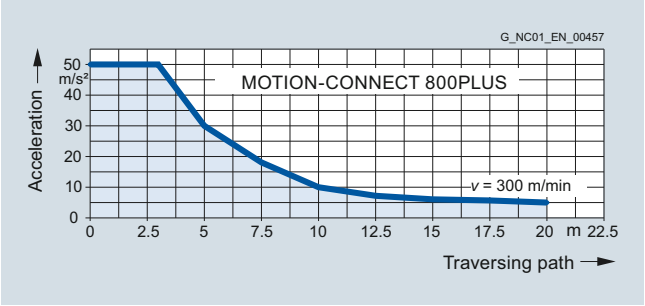

Permissible acceleration for MOTION-CONNECT 800PLUS cables of 25 mm², 35 mm², and 50 mm²

[1] Not applicable to DRIVE-CLiQ signal cables.

© Siemens AG 2017

More information

Current carrying capacity for power and signal cables

The current carrying capacity of PVC/PUR-insulated copper cables is specified for installation types B1, B2, C, and E under continuous operating conditions in the table with reference to an ambient air temperature of 40 °C (104 °F). For other ambient temperatures, the values must be corrected by the derating factors from the table.

Cross-section	**Current carrying capacity** rms AC 50/60 Hz or DC in amps for installation type			
	B1 Single-core cables in conduits or installation ducts	**B2** Multi-core cables in conduits or cable ducts	**C** Multi-core cables, vertically or horizontally on walls/open, without conduits and installation ducts/with contact	**E** Multi-core cables, horizontally or vertically on perforated cable racks/open, without conduits and installation ducts/with contact
mm²				
Electronics [1]				
0.20	–	4.3	4.4	4.4
0.50	–	7.5	7.5	7.8
0.75	–	9	9.5	10
Power [2]				
0.75	8.6	8.5	9.8	10.4
1.00	10.3	10.1	11.7	12.4
1.50	13.5	13.1	15.2	16.1
2.50	18.3	17.4	21	22
4	24	23	28	30
6	31	30	36	37
10	44	40	50	52
16	59	54	66	70
25	77	70	84	88
35	96	86	104	110
50	117	103	125	133
70	149	130	160	171
95	180	165	194	207
120	208	179	225	240

Derating factors for power and signal cables

Ambient air temperature °C (°F)	**Derating factor** according to EN 60204-1, Table D.1
30 (86)	1.15
35 (95)	1.08
40 (104)	1.00
45 (113)	0.91
50 (122)	0.82
55 (131)	0.71
60 (140)	0.58

[1] One control circuit pair.
[2] One symmetrically loaded three-phase AC cable.

© Siemens AG 2017

Overview

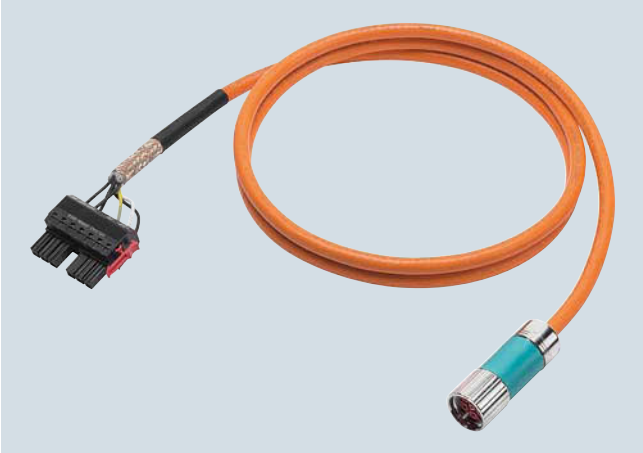

Power cable for connecting a SIMOTICS motor to a SINAMICS S120 Motor Module, C/D type

Power cable with separately supplied connector for connecting a SIMOTICS motor to a SINAMICS S120 Motor Module, C/D type

Power cables

The synchronous and asynchronous motors are connected to the Motor Modules or Power Modules by means of MOTION-CONNECT power cables.

The pre-assembled MOTION-CONNECT power cables are of high quality and offer safety with problem-free functioning.

Depending on the design, the MOTION-CONNECT power cables are either pre-assembled at one end or at both ends.

If pre-assembled power cables are to be installed in a cable carrier in such a way that the connector would inhibit assembly, pre-assembled cables without assembled connector can also be supplied. In this case, the contacts of the cables are crimped and the connector is supplied separately. After installing the cables, the customer assembles the connector.

The 6FX.002-5....-.... power cables are available with crimped contacts and with the connector supplied separately as an option (not applicable to power cables with open core ends or cable lugs).

Power cables with separately supplied **module-end** connector: in this case, the 6th position of the Article No. must be changed from **0** to **1**: 6FX.0**1**2-5....-.... (not for power cables for SINAMICS S120 Power Modules or Motor Modules in booksize compact format).

Power cables without **module-end** connector:
in this case, the 6th position of the Article No. must be changed from **0** to **2**: 6FX.0**2**2-5....-....
The connector can be ordered separately (see page 12/53).

Power cables with separately supplied **motor-end** connector: in this case, the 6th position of the Article No. must be changed from **0** to **4**: 6FX.0**4**2-5....-.... (not for power cables with open core ends on the motor end).

Type of delivery for pre-assembled power cables

Pre-assembled power cables can be ordered in units of 10 cm (3.94 in) up to a maximum length of 299 m (981 ft).

The cables are supplied on reels up to 30 kg (66.1 lb) or 100 m (328 ft). Above 30 kg or 100 m (66.1 lb or 328 ft), cable drums are used instead of reels. This applies to both pre-assembled power cables and for cables sold by the meter.

Type of delivery for power cables sold by the meter

Fixed lengths

Cross-section	Brake cores	**MOTION-CONNECT 500** **MOTION-CONNECT 800PLUS**
1.5 mm^2	without/with	50 m (164 ft), 100 m (328 ft), 200 m (656 ft), 500 m (1641 ft)
2.5 mm^2	without/with	50 m (164 ft), 100 m (328 ft), 200 m (656 ft), 500 m (1641 ft)

Variable length, available in exact meter lengths

Cross-section	Brake cores	**MOTION-CONNECT 500**	**MOTION-CONNECT 800PLUS**
4 mm^2	without/with	≤ 500 m (1641 ft)	≤ 500 m (1641 ft)
6 mm^2	without/with	≤ 500 m (1641 ft)	≤ 500 m (1641 ft)
10 mm^2	without/with	≤ 500 m (1641 ft)	≤ 500 m (1641 ft)
16 mm^2	without/with	≤ 200 m (656 ft)	≤ 200 m (656 ft)
25 mm^2	without with	≤ 200 m (656 ft) ≤ 200 m (656 ft)	– ≤ 200 m (656 ft)
35 mm^2	without with	≤ 200 m (656 ft) ≤ 200 m (656 ft)	– ≤ 200 m (656 ft)
50 mm^2	without with	≤ 200 m (656 ft) ≤ 200 m (656 ft)	– ≤ 200 m (656 ft)
70 mm^2	without	≤ 100 m (328 ft)	–
95 mm^2	without	≤ 100 m (328 ft)	–
120 mm^2	without	≤ 100 m (328 ft)	–

Hybrid cables

Hybrid cables connect AM600 Adapter Modules to the distributed components Hybrid Cabinet Bushings, DRIVE-CLiQ Extension and SINAMICS S120M, as well as the distributed components to one another. Hybrid cables are only delivered pre-assembled.

Type of delivery for pre-assembled hybrid cables

The pre-assembled cables can be delivered in length units of 10 cm (3.94 in) up to 75 m (246 ft) to suit the system.

© Siemens AG 2017

Technical specifications

Power cables	MOTION-CONNECT 500 6FX50..-.....-....	MOTION-CONNECT 800PLUS 6FX80..-.....-....	MOTION-CONNECT 800PLUS [1] 6FX8002-7HY..-....
Certificate of suitability			
• VDE [2]	Yes	Yes	Yes
• cURus or UR/CSA	UL 758, CSA-C22.2-N.210.2-M90	UL 758, CSA-C22.2-N.210.2-M90	UL 758, CSA-C22.2-N.210.2-M90
• UR-CSA File No. [3]	Yes	Yes	Yes
• RoHS conformity	Yes	Yes	Yes
Rated voltage U_0/U according to EN 50395			
• Power conductors	600 V/1000 V	600 V/1000 V	4 mm^2: 600 V/1000 V 2.5 mm^2: 48 V (EN), 1000 V (UL/CSA)
• Signal conductors	24 V (EN), 1000 V (UL/CSA)	24 V (EN), 1000 V (UL/CSA)	AWG22: 30 V (EN), 1000 V (UL/CSA)
Test voltage, rms			
• Power conductors	4 kV	4 kV	4 kV
• Signal conductors	2 kV	2 kV	4 kV
Operating temperature on the surface			
• Fixed installation	-20 … +80 °C (-4 ... +176 °F)	-50 … +80 °C (-58 ... +176 °F)	-50 … +80 °C (-58 ... +176 °F)
• Flexible installation	0 … 60 °C (32 ... 140 °F)	-20 … +60 °C (-4 ... +140 °F)	-20 … +60 °C (-4 ... +140 °F)
Tensile stress, max.			
• Fixed installation	50 N/mm^2 (7252 lb$_f$/in^2)	50 N/mm^2 (7252 lb$_f$/in^2)	50 N/mm^2 (7252 lb$_f$/in^2)
• Flexible installation	20 N/mm^2 (2901 lb$_f$/in^2)	20 N/mm^2 (2901 lb$_f$/in^2)	20 N/mm^2 (2901 lb$_f$/in^2)
Smallest bending radius			
• Fixed installation	5 × D_{max}	4 × D_{max}	4 × D_{max}
• Flexible installation	See selection and ordering data	See selection and ordering data	See selection and ordering data
Torsional stress	Absolute 30°/m	Absolute 30°/m	Absolute 30°/m
Bending	100000	10 million	10 million
Traversing velocity	30 m/min (98.4 ft/min)	Up to 300 m/min (984 ft/min)	Up to 300 m/min (984 ft/min)
Acceleration	2 m/s^2 (6.56 ft/s^2)	Up to 50 m/s^2 (164 ft/s^2), see characteristics on page 12/5	Up to 50 m/s^2 (164 ft/s^2), see characteristics on page 12/5
Insulation material, incl. jacket	CFC/silicone-free	CFC/halogen-free/silicon-free IEC 60754-1/DIN VDE 0472-815	CFC/halogen-free/silicon-free IEC 60754-1/DIN VDE 0472-815
Oil resistance	EN 60811-2-1 (mineral oil only)	EN 60811-2-1	EN 60811-2-1
Outer jacket	PVC DESINA color orange RAL 2003	PUR, HD22.10 S2 (VDE 0282, Part 10) DESINA color orange RAL 2003	PUR, HD22.10 S2 (VDE 0282, Part 10) DESINA color orange RAL 2003
Flame-retardant	EN 60332-1-1 to 1-3	EN 60332-1-1 to 1-3	EN 60332-1-1 to 1-3

Degree of protection of the pre-assembled power cables and their extensions when closed and inserted: IP67.

12

[1] Hybrid cables
[2] The respective registration number is printed on the cable jacket (only applies to power cables).
[3] The File No. is printed on the cable jacket.

© Siemens AG 2017

Selection and ordering data

For SIMOTICS S-1KF7/-1FT7 motors without holding brake/SIMOTICS M-1PH808/-1PH810 motors with SPEED-CONNECT connector on SINAMICS S120 Motor Modules in booksize format

Connection method, Motor Module end	No. of cores × cross-section	Connector size, motor end	**Pre-assembled cable without brake cores**	**Cable sold by the meter [1] without brake cores**	D_{max}		Weight (without connector)		Smallest bending radius [2]	
					6FX5	**6FX8**	**6FX5**	**6FX8**	**6FX5**	**6FX8**
	mm²		Article No.	Article No.	mm (in)	mm (in)	kg/m (lb/ft)	kg/m (lb/ft)	mm (in)	mm (in)
Connector [3]	4 × 1.5	0.5	**6FX■0■2-5CN27-....**	**6FX■008-1BB11-....**	8.4 (0.33)	9.5 (0.37)	0.12 (0.08)	0.15 (0.10)	155 (6.10)	75 (2.95)
		1	**6FX■0■2-5CN06-....**							
		1.5	**6FX■0■2-5CN26-....**							
	4 × 2.5	1	**6FX■0■2-5CN16-....**	**6FX■008-1BB21-....**	10.0 (0.39)	11.0 (0.43)	0.21 (0.14)	0.20 (0.13)	180 (7.09)	90 (3.54)
		1.5	**6FX■0■2-5CN36-....**							
	4 × 4	1.5	**6FX■0■2-5CN46-....**	**6FX■008-1BB31-....**	11.4 (0.45)	12.3 (0.48)	0.27 (0.18)	0.27 (0.18)	210 (8.27)	100 (3.94)
	4 × 6	1.5	**6FX■0■2-5CN56-....**	**6FX■008-1BB41-....**	13.6 (0.54)	14.9 (0.59)	0.37 (0.25)	0.41 (0.28)	245 (9.65)	120 (4.72)
	4 × 10	1.5	**6FX■0■2-5CN66-....**	**6FX■008-1BB51-....**	20.0 (0.79)	18.2 (0.72)	0.73 (0.49)	0.62 (0.42)	360 (14.17)	140 (5.51)
Ring cable lugs [4]	4 × 6	1.5	**6FX■002-5CN54-....**	**6FX■008-1BB41-....**	13.6 (0.54)	14.9 (0.59)	0.37 (0.25)	0.41 (0.28)	245 (9.65)	120 (4.72)
			6FX■042-5CN54-....							
	4 × 10	1.5	**6FX■002-5CN64-....**	**6FX■008-1BB51-....**	20.0 (0.79)	18.2 (0.72)	0.73 (0.49)	0.62 (0.42)	360 (14.17)	140 (5.51)
			6FX■042-5CN64-....							

MOTION-CONNECT 500	**5**				**5**		
MOTION-CONNECT 800PLUS	**8**				**8**		
Power cable							
Pre-assembled		**0**					
Connector at module end supplied separately		**1**					
Connector at module end not supplied		**2**					
Connector at motor end supplied separately		**4**					
Length code			**....**			**....**	

[1] Note type of delivery.
[2] Valid for installation in a cable carrier.
[3] For SINAMICS S120 Motor Modules in booksize format C/D type, 3 A to 30 A.
[4] For SINAMICS S120 Motor Modules in booksize format, 45 A and 60 A.

© Siemens AG 2017

Selection and ordering data (continued)

For SIMOTICS S-1FK7/-1FT7 motors with holding brake and with SPEED-CONNECT connector on SINAMICS S120 Motor Modules in booksize format

Connection method, Motor Module end	No. of cores × cross-section	Connector size, motor end	Pre-assembled cable with brake cores	Cable sold by the meter [1] with brake cores	D_{max}		Weight (without connector)		Smallest bending radius [2]	
					6FX5	**6FX8**	**6FX5**	**6FX8**	**6FX5**	**6FX8**
	mm²		Article No.	Article No.	mm (in)	mm (in)	kg/m (lb/ft)	kg/m (lb/ft)	mm (in)	mm (in)
Connector [3]	4 × 1.5+2 × 1.5	0.5	**6FX■0■2-5DN27-....**	**6FX■008-1BA11-....**	10.8 (0.43)	12.0 (0.47)	0.22 (0.15)	0.23 (0.11)	195 (7.68)	90 (3.54)
		1	**6FX■0■2-5DN06-....**							
		1.5	**6FX■0■2-5DN26-....**							
	4 × 2.5+2 × 1.5	1	**6FX■0■2-5DN16-....**	**6FX■008-1BA21-....**	12.4 (0.49)	13.8 (0.54)	0.25 (0.17)	0.30 (0.20)	225 (8.86)	105 (4.13)
		1.5	**6FX■0■2-5DN36-....**							
	4 × 4+2 × 1.5	1.5	**6FX■0■2-5DN46-....**	**6FX■008-1BA31-....**	14.0 (0.55)	15.2 (0.60)	0.35 (0.24)	0.38 (0.26)	255 (10.04)	115 (4.53)
	4 × 6+2 × 1.5	1.5	**6FX■0■2-5DN56-....**	**6FX■008-1BA41-....**	16.1 (0.63)	17.3 (0.68)	0.49 (0.33)	0.50 (0.34)	290 (11.42)	130 (5.12)
	4 × 10+2 × 1.5	1.5	**6FX■0■2-5DN66-....**	**6FX■008-1BA51-....**	21.7 (0.85)	20.1 (0.79)	0.81 (0.54)	0.71 (0.48)	395 (15.55)	150 (5.91)
Ring cable lugs [4]	4 × 6+2 × 1.5	1.5	**6FX■002-5DN54-....**	**6FX■008-1BA41-....**	16.1 (0.63)	17.3 (0.68)	0.49 (0.33)	0.50 (0.34)	290 (11.42)	130 (5.12)
			6FX■042-5DN54-....							
	4 × 10+2 × 1.5	1.5	**6FX■002-5DN64-....**	**6FX■008-1BA51-....**	21.7 (0.85)	20.1 (0.79)	0.81 (0.54)	0.71 (0.48)	395 (15.55)	150 (5.91)
			6FX■042-5DN64-....							

MOTION-CONNECT 500	**5**				**5**		
MOTION-CONNECT 800PLUS	**8**				**8**		
Power cable							
Pre-assembled		**0**					
Connector at module end supplied separately		**1**					
Connector at module end not supplied		**2**					
Connector at motor end supplied separately		**4**					
Length code			**....**			**....**	

[1] Note type of delivery.
[2] Valid for installation in a cable carrier.
[3] For SINAMICS S120 Motor Modules in booksize format C/D type, 3 A to 30 A.
[4] For SINAMICS S120 Motor Modules in booksize format, 45 A and 60 A.

© Siemens AG 2017

Selection and ordering data (continued)

For SIMOTICS S-1FK7/-1FT7 motors without holding brake/SIMOTICS M-1PH808/-1PH810 motors, with SPEED-CONNECT connector on SINAMICS S120 Motor Modules in booksize compact format and Power Modules

Connection method, Power Module end	No. of cores × cross-section	Connector size, motor end	Pre-assembled cable without brake cores	Cable sold by the meter [1] without brake cores	D_{max}		Weight (without connector)		Smallest bending radius [2]	
					6FX5	6FX8	6FX5	6FX8	6FX5	6FX8
	mm²		Article No.	Article No.	mm (in)	mm (in)	kg/m (lb/ft)	kg/m (lb/ft)	mm (in)	mm (in)
Exposed core ends	4 × 1.5	1	6FX■0■2-5CG10-....	6FX■008-1BB11-....	8.4 (0.33)	9.5 (0.37)	0.12 (0.08)	0.15 (0.10)	155 (6.10)	75 (2.95)
		1.5	6FX■0■2-5CG22-....							
	4 × 2.5	1	6FX■0■2-5CG12-....	6FX■008-1BB21-....	10.0 (0.39)	11.0 (0.43)	0.21 (0.69)	0.20 (0.13)	180 (7.09)	90 (3.54)
		1.5	6FX■0■2-5CG32-....							
	4 × 4	1.5	6FX■0■2-5CG42-....	6FX■008-1BB31-....	11.4 (0.45)	12.3 (0.48)	0.27 (0.18)	0.27 (0.18)	210 (8.27)	100 (3.94)
	4 × 6	1.5	6FX■0■2-5CG52-....	6FX■008-1BB41-....	13.6 (0.54)	14.9 (0.59)	0.37 (0.25)	0.41 (0.28)	245 (9.65)	120 (4.72)
	4 × 10	1.5	6FX■0■2-5CG62-....	6FX■008-1BB51-....	20.0 (0.79)	18.2 (0.72)	0.73 (0.49)	0.62 (0.42)	360 (14.17)	140 (5.51)

MOTION-CONNECT 500	**5**				**5**		
MOTION-CONNECT 800PLUS	**8**				**8**		
Power cable							
Pre-assembled		**0**					
Connector at motor end supplied separately		**4**					
Length code			....				....

For SIMOTICS S-1FK7/-1FT7 motors with holding brake, with SPEED-CONNECT connector on SINAMICS S120 Motor Modules in booksize compact format and Power Modules

Connection method, Power Module end	No. of cores × cross-section	Connector size, motor end	Pre-assembled cable with brake cores	Cable sold by the meter [1] with brake cores	D_{max}		Weight (without connector)		Smallest bending radius [2]	
					6FX5	6FX8	6FX5	6FX8	6FX5	6FX8
	mm²		Article No.	Article No.	mm (in)	mm (in)	kg/m (lb/ft)	kg/m (lb/ft)	mm (in)	mm (in)
Exposed core ends	4 × 1.5+2 × 1.5	0.5	6FX■0■2-5DN30-....	6FX■008-1BA11-....	10.8 (0.43)	12.0 (0.47)	0.22 (0.15)	0.23 (0.15)	195 (7.68)	90 (3.54)
		1	6FX■0■2-5DG10-....							
		1.5	6FX■0■2-5DG22-....							
	4 × 2.5+2 × 1.5	1	6FX■0■2-5DG12-....	6FX■008-1BA21-....	12.4 (0.49)	13.8 (0.54)	0.25 (0.17)	0.30 (0.20)	225 (8.86)	105 (4.13)
		1.5	6FX■0■2-5DG32-....							
	4 × 4+2 × 1.5	1.5	6FX■0■2-5DG42-....	6FX■008-1BA31-....	14.0 (0.55)	15.2 (0.60)	0.35 (0.24)	0.38 (0.26)	255 (10.04)	115 (4.53)
	4 × 6+2 × 1.5	1.5	6FX■0■2-5DG52-....	6FX■008-1BA41-....	16.1 (0.63)	17.3 (0.68)	0.49 (0.33)	0.50	290 (11.42)	130 (5.12)
	4 × 10+2 × 1.5	1.5	6FX■0■2-5DG62-....	6FX■008-1BA51-....	21.7 (0.85)	20.1 (0.79)	0.81 (0.54)	0.71 (0.48)	395 (15.55)	150 (5.91)

MOTION-CONNECT 500	**5**				**5**		
MOTION-CONNECT 800PLUS	**8**				**8**		
Power cable							
Pre-assembled		**0**					
Connector at motor end supplied separately		**4**					
Length code			....				....

[1] Note type of delivery.
[2] Valid for installation in a cable carrier.

© Siemens AG 2017

Power cables for SIMOTICS S-1FT7/S-1FK7/M-1PH8 motors with full-thread connector

Selection and ordering data

For SIMOTICS S-1FK7/-1FT7 motors without holding brake/SIMOTICS M-1PH808/-1PH810/-1PH813 motors with full-thread connector on SINAMICS S120 Motor Modules in booksize format

Connection method, Motor Module end	No. of cores × cross-section	Connector size, motor end	**Pre-assembled cable without brake cores**	**Cable sold by the meter [1] without brake cores**	D_{max}		Weight (without connector)		Smallest bending radius [2]	
					6FX5	**6FX8**	**6FX5**	**6FX8**	**6FX5**	**6FX8**
	mm²		Article No.	Article No.	mm (in)	mm (in)	kg/m (lb/ft)	kg/m (lb/ft)	mm (in)	mm (in)
Connector [3]	4 × 1.5	1	**6FX■0■2-5CS06-....**	**6FX■008-1BB11-....**	8.4 (0.33)	9.5 (0.37)	0.12 (0.08)	0.15 (0.10)	155 (6.10)	75 (2.95)
		1.5	**6FX■0■2-5CS26-....**							
		e. c. [4]	**6FX5002-5CW02-....**							
			6FX5012-5CW02-....							
			6FX5022-5CW02-....							
	4 × 2.5	1	**6FX■0■2-5CS16-....**	**6FX■008-1BB21-....**	10.0 (0.39)	11.0 (0.43)	0.21 (0.69)	0.20 (0.13)	180 (7.09)	90 (3.54)
		1.5	**6FX■0■2-5CS36-....**							
		e. c. [4]	**6FX5002-5CW12-....**							
			6FX5012-5CW12-....							
			6FX5022-5CW12-....							
	4 × 4	1.5	**6FX■0■2-5CS46-....**	**6FX■008-1BB31-....**	11.4 (0.45)	12.3 (0.48)	0.27 (0.18)	0.27 (0.18)	210 (8.27)	100 (3.94)
		e. c. [4]	**6FX5002-5CW42-....**							
			6FX5012-5CW42-....							
			6FX5022-5CW42-....							
	4 × 6	1.5	**6FX■0■2-5CS56-....**	**6FX■008-1BB41-....**	13.6 (0.54)	14.9 (0.59)	0.37 (0.25)	0.41 (0.28)	245 (9.65)	120 (4.72)
		e. c. [4]	**6FX5002-5CW52-....**							
			6FX5012-5CW52-....							
			6FX5022-5CW52-....							
	4 × 10	1.5	**6FX■0■2-5CS66-....**	**6FX■008-1BB51-....**	20.0 (0.79)	18.2 (0.72)	0.73 (0.49)	0.62 (0.42)	360 (14.17)	140 (5.51)
		3	**6FX■0■2-5CS17-....**							
		e. c. [4]	**6FX5002-5CW62-....**							
			6FX5012-5CW62-....							
			6FX5022-5CW62-....							
Ring cable lugs [5]	4 × 6	1.5	**6FX■002-5CS54-....**	**6FX■008-1BB41-....**	13.6 (0.54)	14.9 (0.59)	0.37 (0.25)	0.41 (0.28)	245 (9.65)	120 (4.72)
			6FX■042-5CS54-....							
	4 × 10	1.5	**6FX■002-5CS64-....**	**6FX■008-1BB51-....**	20.0 (0.79)	18.2 (0.72)	0.73 (0.49)	0.62 (0.42)	360 (14.17)	140 (5.51)
			6FX■042-5CS64-....							
		3	**6FX■002-5CS14-....**							
			6FX■042-5CS14-....							
	4 × 16	1.5	**6FX8002-5CS24-....**	**6FX■008-1BB61-....**	24.2 (0.95)	22.3 (0.88)	1.10 (0.74)	1.01 (0.68)	440 (17.32)	170 (6.69)
			6FX8042-5CS24-....							
		3	**6FX■002-5CS23-....**							
			6FX■042-5CS23-....							

MOTION-CONNECT 500	**5**				**5**	
MOTION-CONNECT 800PLUS	**8**				**8**	
Power cable						
Pre-assembled		**0**				
Connector at module end supplied separately		**1**				
Connector at module end not supplied		**2**				
Connector at motor end supplied separately		**4**				
Length code			**....**			**....**

[1] Note type of delivery.
[2] Valid for installation in a cable carrier.
[3] For SINAMICS S120 Motor Modules in booksize format C/D type 3 A to 30 A
[4] e. c. = exposed core ends; suitable for motors with terminal box.
[5] For SINAMICS S120 Motor Modules in booksize format, 45 A and 60 A.

© Siemens AG 2017

Selection and ordering data (continued)

For SIMOTICS S-1FK7/-1FT7 motors with holding brake and with full-thread connector on SINAMICS S120 Motor Modules in booksize format

Connection method, Motor Module end	No. of cores × cross-section	Connector size, motor end	Pre-assembled cable with brake cores	Cable sold by the meter [1] with brake cores	D_{max}		Weight (without connector)		Smallest bending radius [2]	
					6FX5	**6FX8**	**6FX5**	**6FX8**	**6FX5**	**6FX8**
	mm²		Article No.	Article No.	mm (in)	mm (in)	kg/m (lb/ft)	kg/m (lb/ft)	mm (in)	mm (in)
Connector [3]	4 × 1.5+2 × 1.5	0.5	**6FX■0■2-5DS27-....**	**6FX5 008-1BA11-....**	10.8 (0.43)	–	0.22 (0.15)	–	195 (7.68)	–
		1	**6FX■0■2-5DS06-....**	**6FX■008-1BA11-....**	10.8 (0.43)	12.0 (0.47)	0.22 (0.15)	0.23 (0.15)	195 (7.68)	90 (3.54)
		1.5	**6FX■0■2-5DS26-....**							
	4 × 2.5+2 × 1.5	1	**6FX■0■2-5DS16-....**	**6FX■008-1BA21-....**	12.4 (0.49)	13.8 (0.54)	0.25 (0.17)	0.30 (0.20)	225 (8.86)	105 (4.13)
		1.5	**6FX■0■2-5DS36-....**							
	4 × 4+2 × 1.5	1.5	**6FX■0■2-5DS46-....**	**6FX■008-1BA31-....**	14.0 (0.55)	15.2 (0.60)	0.35 (0.24)	0.38 (0.26)	255 (10.04)	115 (4.53)
	4 × 6+2 × 1.5	1.5	**6FX■0■2-5DS56-....**	**6FX■008-1BA41-....**	16.1 (0.63)	17.3 (0.68)	0.49 (0.33)	0.50 (0.34)	290 (11.42)	130 (5.12)
	4 × 10+2 × 1.5	1.5	**6FX■0■2-5DS66-....**	**6FX■008-1BA51-....**	21.7 (0.85)	20.1 (0.79)	0.81 (0.54)	0.71 (0.48)	395 (15.55)	150 (5.91)
		3	**6FX■0■2-5DS17-....**							
Ring cable lugs [4]	4 × 6+2 × 1.5	1.5	**6FX■002-5DS54-....**	**6FX■008-1BA41-....**	16.1 (0.63)	17.3 (0.68)	0.49 (0.33)	0.50 (0.34)	290 (11.42)	130 (5.12)
			6FX■042-5DS54-....							
	4 × 10+2 × 1.5	1.5	**6FX■002-5DS64-....**	**6FX■008-1BA51-....**	21.7 (0.85)	20.1 (0.79)	0.81 (0.54)	0.71 (0.48)	395 (15.55)	150 (5.91)
			6FX■042-5DS64-....							
		3	**6FX■002-5DS14-....**							
			6FX■042-5DS14-....							
	4 × 16+2 × 1.5	3	**6FX■002-5DS23-....**	**6FX■008-1BA61-....**	25.0 (0.98)	23.8 (0.94)	1.12 (0.75)	1.03 (0.69)	450 (17.72)	180 (7.09)
			6FX■042-5DS23-....							
Exposed core ends [5]	4 × 16+2 × 1.5	3	**6FX■002-5DG23-....**	**6FX■008-1BA61-....**	25.0 (0.98)	23.8 (0.94)	1.12 (0.75)	1.03 (0.69)	450 (17.72)	180 (7.09)
			6FX■042-5DG23-....							
	4 × 25+2 × 1.5	3	**6FX■002-5DG33-....**	**6FX■008-1BA25-....**	29.4 (1.16)	27.6 (1.09)	1.62 (1.09)	1.47 (0.99)	530 (20.87)	280 (11.02)
			6FX■042-5DG33-....							
	4 × 35+2 × 1.5	3	**6FX■002-5DG43-....**	**6FX■008-1BA35-....**	32.6 (1.28)	31.9 (1.26)	2.06 (1.38)	1.92 (1.29)	590 (23.23)	320 (12.60)
			6FX■042-5DG43-....							
	4 × 50+2 × 1.5	3	**6FX■002-5DG53-....**	**6FX■008-1BA50-....**	38.0 (1.50)	35.0 (1.38)	3.04 (2.04)	2.56 (1.72)	685 (26.97)	350 (13.78)
			6FX■042-5DG53-....							

MOTION-CONNECT 500	**5**				**5**		
MOTION-CONNECT 800PLUS	**8**				**8**		
Power cable							
Pre-assembled		**0**					
Connector at module end supplied separately		**1**					
Connector at module end not supplied		**2**					
Connector at motor end supplied separately		**4**					
Length code			**....**				**....**

[1] Note type of delivery.
[2] Valid for installation in a cable carrier.
[3] For SINAMICS S120 Motor Modules in booksize format C/D type, 3 A to 30 A.
[4] For SINAMICS S120 Motor Modules in booksize format, 45 A and 60 A.
[5] Length of core ends: 300 mm (11.81 in). 4 M8 cable lugs, 1 M6 cable lug, and 1 spring-type terminal are also included in the scope of supply of the cables.

© Siemens AG 2017

Selection and ordering data (continued)

For SIMOTICS S-1FK7/1FT7 motors without holding brake/SIMOTICS M-1PH808/-1PH810/-1PH813 motors with full-thread connector on SINAMICS S120 Motor Modules in booksize compact format and Power Modules

Connection method, Power Module end	No. of cores × cross-section	Connector size, motor end	Pre-assembled cable without brake cores	Cable sold by the meter [1] without brake cores	D_{max}		Weight (without connector)		Smallest bending radius [2]	
					6FX5	6FX8	6FX5	6FX8	6FX5	6FX8
	mm²		Article No.	Article No.	mm (in)	mm (in)	kg/m (lb/ft)	kg/m (lb/ft)	mm (in)	mm (in)
Exposed core ends	4 × 1.5	1	6FX■0■2-5CG01-....	6FX■008-1BB11-....	8.4 (0.33)	9.5 (0.37)	0.12 (0.08)	0.15 (0.10)	155 (6.10)	75 (2.95)
		1.5	6FX■0■2-5CG21-....							
	4 × 2.5	1	6FX■0■2-5CG11-....	6FX■008-1BB21-....	10.0 (0.39)	11.0 (0.43)	0.21 (0.14)	0.20 (0.13)	180 (7.09)	90 (3.54)
		1.5	6FX■0■2-5CG31-....							
	4 × 4	1.5	6FX■0■2-5CG41-....	6FX■008-1BB31-....	11.4 (0.45)	12.3 (0.48)	0.27 (0.18)	0.27 (0.18)	210 (8.27)	100 (3.94)
	4 × 6	1.5	6FX■0■2-5CG51-....	6FX■008-1BB41-....	13.6 (0.54)	14.9 (0.59)	0.37 (0.25)	0.41 (0.28)	245 (9.65)	120 (4.72)
	4 × 10	1.5	6FX■0■2-5CG61-....	6FX■008-1BB51-....	20.0 (0.79)	18.2 (0.72)	0.73 (0.49)	0.62 (0.42)	360 (14.17)	140 (5.51)
		3	6FX■0■2-5CG13-....							
	4 × 16	3	6FX■0■2-5CG23-....	6FX■008-1BB61-....	24.2 (0.95)	22.3 (0.88)	1.10 (0.74)	1.01 (0.68)	440 (17.32)	170 (6.69)

MOTION-CONNECT 500	**5**			**5**		
MOTION-CONNECT 800PLUS	**8**			**8**		
Power cable						
Pre-assembled		**0**				
Connector at motor end supplied separately		**4**				
Length code			**....**			**....**

For SIMOTICS S-1FK7/-1FT7 motors with holding brake and with full-thread connector on SINAMICS S120 Motor Modules in booksize compact format and Power Modules

Connection method, Power Module end	No. of cores × cross-section	Connector size, motor end	Pre-assembled cable with brake cores	Cable sold by the meter [1] with brake cores	D_{max}		Weight (without connector)		Smallest bending radius [2]	
					6FX5	6FX8	6FX5	6FX8	6FX5	6FX8
	mm²		Article No.	Article No.	mm (in)	mm (in)	kg/m (lb/ft)	kg/m (lb/ft)	mm (in)	mm (in)
Exposed core ends	4 × 1.5+2 × 1.5	0.5	6FX50■2-5DA30-....	6FX5008-1BA11-....	10.8 (0.43)	–	0.22 (0.15)	–	195 (7.68)	–
		1	6FX■0■2-5DG01-....	6FX■008-1BA11-....	10.8 (0.43)	12.0 (0.47)	0.22 (0.15)	0.23 (0.15)	195 (7.68)	90 (3.54)
		1.5	6FX■0■2-5DG21-....							
	4 × 2.5+2 × 1.5	1	6FX■0■2-5DG11-....	6FX■008-1BA21-....	12.4 (0.49)	13.8 (0.54)	0.25 (0.17)	0.30 (0.20)	225 (8.86)	105 (4.13)
		1.5	6FX■0■2-5DG31-....							
	4 × 4+2 × 1.5	1.5	6FX■0■2-5DG41-....	6FX■008-1BA31-....	14.0 (0.55)	15.2 (0.60)	0.35 (0.24)	0.38 (0.26)	255 (10.04)	115 (4.53)
	4 × 6+2 × 1.5	1.5	6FX■0■2-5DG51-....	6FX■008-1BA41-....	16.1 (0.63)	17.3 (0.68)	0.49 (0.33)	0.50	290 (11.42)	130 (5.12)
	4 × 10+2 × 1.5	1.5	6FX■0■2-5DG61-....	6FX■008-1BA51-....	21.7 (0.85)	20.1 (0.79)	0.81 (0.54)	0.71 (0.48)	395 (15.55)	150 (5.91)
		3	6FX■0■2-5DG13-....							
	4 × 16+2 × 1.5	3	6FX■0■2-5DG23-....	6FX■008-1BA61-....	25.0 (0.98)	23.8 (0.94)	1.12 (0.75)	1.03 (0.69)	450 (17.72)	180 (7.09)
	4 × 25+2 × 1.5	3	6FX■0■2-5DG33-....	6FX■008-1BA25-....	29.4 (1.16)	27.6 (1.09)	1.62 (1.09)	1.47 (0.99)	530 (20.87)	280 (11.02)
	4 × 35+2 × 1.5	3	6FX■0■2-5DG43-....	6FX■008-1BA35-....	32.6 (1.28)	31.9 (1.26)	2.06 (1.38)	1.92 (1.29)	590 (23.23)	320 (12.60)
	4 × 50+2 × 1.5	3	6FX■0■2-5DG53-....	6FX■008-1BA50-....	38.0 (1.50)	35.0 (1.38)	3.04 (2.04)	2.56 (1.72)	685 (26.97)	350 (13.78)

MOTION-CONNECT 500	**5**			**5**		
MOTION-CONNECT 800PLUS	**8**			**8**		
Power cable						
Pre-assembled		**0**				
Connector at motor end supplied separately		**4**				
Length code			**....**			**....**

[1] Note type of delivery.
[2] Valid for installation in a cable carrier.

© Siemens AG 2017

Accessories

Extensions for power cables with SPEED-CONNECT or full-thread connector

No. of cores × cross-section without brake cores	No. of cores × cross-section with brake cores	Connector size, motor end	Basic cable for motors on SINAMICS S120: Motor Modules booksize format	Basic cable for motors on SINAMICS S120: Power Modules Motor Modules booksize compact format	**Extension**
mm²	mm²		Type	Type	Article No.
4 × 1.5	4 × 1.5+2 × 1.5	0.5	6FX . 002-5DS27-....	6FX . 002-5DA30-....	**6FX■002-5ME05-....**
			6FX . 002-5 . N27-....	6FX . 002-5DN30-....	**6FX■002-5MN05-....**
4 × 1.5	4 × 1.5+2 × 1.5	1	6FX . 002-5 . S06-....	6FX . 002-5 . G01-....	**6FX■002-5■A05-....**
			6FX . 002-5 . N06-....	6FX . 002-5 . G10-....	**6FX■002-5■N05-....**
		1.5	6FX . 002-5 . S26-....	6FX . 002-5 . G21-....	**6FX■002-5■A28-....**
			6FX . 002-5 . N26-....	6FX . 002-5 . G22-....	**6FX■002-5■Q28-....**
4 × 2.5	4 × 2.5+2 × 1.5	1	6FX . 002-5 . S16-....	6FX . 002-5 . G11-....	**6FX■002-5■A15-....**
			6FX . 002-5 . N16-....	6FX . 002-5 . G12-....	**6FX■002-5■Q15-....**
		1.5	6FX . 002-5 . S36-....	6FX . 002-5 . G31-....	**6FX■002-5■A38-....**
			6FX . 002-5 . N36-....	6FX . 002-5 . G32-....	**6FX■002-5■Q38-....**
4 × 4	4 × 4+2 × 1.5	1.5	6FX . 002-5 . S46-....	6FX . 002-5 . G41-....	**6FX■002-5■A48-....**
			6FX . 002-5 . N46-....	6FX . 002-5 . G42-....	**6FX■002-5■Q48-....**
4 × 6	4 × 6+2 × 1.5	1.5	6FX . 002-5 . S56-....	6FX . 002-5 . G51-....	**6FX■002-5■A58-....**
			6FX . 002-5 . S54-....	–	**6FX■002-5■A58-....**
			6FX . 002-5 . N56-....	6FX . 002-5 . G52-....	**6FX■002-5■Q58-....**
			6FX . 002-5 . N54-....	–	**6FX■002-5■Q58-....**
4 × 10	4 × 10+2 × 1.5	1.5	6FX . 002-5 . S66-....	6FX . 002-5 . G61-....	**6FX■002-5■A68-....**
			6FX . 002-5 . S64-....	–	**6FX■002-5■A68-....**
			6FX . 002-5 . N66-....	6FX . 002-5 . G62-....	**6FX■002-5■Q68-....**
			6FX . 002-5 . N64-....	–	**6FX■002-5■Q68-....**
		3 [1]	6FX . 002-5 . S17-....	6FX . 002-5 . G13-....	**6FX■002-5■X18-....**
			6FX . 002-5 . S14-....	–	**6FX■002-5■X18-....**
4 × 16	4 × 16+2 × 1.5	3 [1]	6FX . 002-5 . S23-....	6FX . 002-5 . G23-....	**6FX■002-5■X28-....**
			6FX . 002-5 . G23-....	–	**6FX■002-5■X28-....**
–	4 × 25+2 × 1.5	3 [1]	6FX . 002-5DG33-....	6FX . 002-5DG33-....	**6FX■002-5DX38-....**
–	4 × 35+2 × 1.5	3 [1]	6FX . 002-5DG43-....	6FX . 002-5DG43-....	**6FX■002-5DX48-....**
–	4 × 50+2 × 1.5	3 [1]	6FX . 002-5DG53-....	6FX . 002-5DG53-....	**6FX■002-5DX58-....**

MOTION-CONNECT 500	**5**		
MOTION-CONNECT 800PLUS	**8**		
Without brake cores		**C**	
With brake cores		**D**	
Length code			**....**

The maximum specified cable length (basic cable and extensions) must not be exceeded. The total maximum length of power cables with brake cores is reduced by 2 m (6.56 ft) for each interruption point.

[1] Motor-end connector with full thread only.

© Siemens AG 2017

Selection and ordering data

For SIMOTICS M-1PH808/-1PH810/-1PH813/-1PH816 motors with terminal box on SINAMICS S120 Motor Modules

Motor SIMOTICS	Thread	No. of cores × cross-section mm²	Connection method Motor Module end	**Pre-assembled cable** Article No.	**Cable sold by the meter** [1] Article No.	D_{max} mm (in)	Weight (without gland) kg/m (lb/ft)	Smallest bending radius [2] mm (in)
M-1PH808	M25	4 × 2.5	Connector [3]	**6FX80■2-5CP17-....**	**6FX8008-1BB21-....**	11.0 (0.43)	0.20 (0.13)	90 (3.54)
		4 × 4		**6FX80■2-5CP27-....**	**6FX8008-1BB31-....**	12.3 (0.48)	0.27 (0.18)	100 (3.94)
M-1PH810	M32	4 × 2.5	Connector [3]	**6FX80■2-5CP16-....**	**6FX8008-1BB21-....**	11.0 (0.43)	0.20 (0.13)	90 (3.54)
		4 × 4		**6FX80■2-5CP26-....**	**6FX8008-1BB31-....**	12.3 (0.48)	0.27 (0.18)	100 (3.94)
		4 × 10		**6FX80■2-5CP46-....**	**6FX8008-1BB51-....**	18.2 (0.72)	0.62 (0.42)	140 (5.51)
		4 × 10	Exposed core ends [4]	**6FX8002-5CR41-....**				
M-1PH813	M40	4 × 10	Connector [3]	**6FX80■2-5CP47-....**	**6FX8008-1BB51-....**	18.2 (0.72)	0.62 (0.42)	140 (5.51)
			Exposed core ends [4]	**6FX8002-5CR42-....**				
	M50	4 × 10	Connector [3]	**6FX80■2-5CP45-....**				
			Exposed core ends [4]	**6FX8002-5CR43-....**				
	M40	4 × 16	Exposed core ends [4]	**6FX8002-5CR52-....**	**6FX8008-1BB61-....**	22.3 (0.88)	1.01 (0.68)	170 (6.69)
	M50	4 × 16		**6FX8002-5CR53-....**				
		4 × 35		**6FX5002-5CR73-....**	**6FX5008-1BB35-....**	31.5 (1.24)	1.93 (1.30)	570 (22.44)
		4 × 50		**6FX5002-5CR83-....**	**6FX5008-1BB50-....**	38.0 (1.50)	3.04 (2.04)	685 (26.97)
M-1PH816	M50	4 × 16	Exposed core ends [3]	**6FX8002-5CR53-....**	**6FX8008-1BB61-....**	22.3 (0.88)	1.01 (0.68)	170 (6.69)
				–	**6FX5008-1BB61-....**	24.2 (0.95)	1.10 (0.74)	440 (17.32)
		4 × 35		**6FX5002-5CR73-....**	**6FX5008-1BB35-....**	31.5 (1.24)	1.93 (1.30)	570 (22.44)
				–	**6FX8008-1BA35-....**	29.6 (1.17)	2.00 (1.34)	300 (11.81)
		4 × 50		**6FX5002-5CR83-....**	**6FX5008-1BB50-....**	38.0 (1.50)	3.04 (2.04)	685 (26.97)
				–	**6FX8008-1BA50-....**	34.4 (1.35)	2.66 (1.79)	345 (13.58)
	M63	4 × 25		–	**6FX5008-1BB25-....** **6FX8008-1BA25-....**	28.0 (1.10) 27.6 (1.09)	1.62 (1.09) 1.51 (1.01)	505 (19.88) 280 (11.02)
		4 × 35		–	**6FX5008-1BB35-....** **6FX8008-1BA35-....**	31.5 (1.24) 29.6 (1.17)	1.93 (1.30) 2.00 (1.34)	570 (22.44) 300 (11.81)
		4 × 50		–	**6FX5008-1BB50-....** **6FX8008-1BA50-....**	38.0 (1.50) 35 (1.38)	3.04 (2.04) 2.56 (1.72)	685 (26.97) 350 (13.8)
		4 × 70		–	**6FX5008-1BB70-....**	42.6 (1.68)	3.96 (2.66)	770 (30.31)

MOTION-CONNECT 500	**5**				**5**		
MOTION-CONNECT 800PLUS	**8**				**8**		
Power cable							
Pre-assembled		**0**					
Connector at module end supplied separately		**1**					
Connector at module end not supplied		**2**					
Length code			**....**				**....**

[1] Note type of delivery.
[2] Valid for installation in a cable carrier.
[3] For SINAMICS S120 Motor Modules in booksize format C/D type, 3 A to 30 A.
[4] Length of core ends: 300 mm (11.81 in). 4 M8 cable lugs and 4 M6 cable lugs are also included in the scope of supply of the cables.

© Siemens AG 2017

Selection and ordering data (continued)

For SIMOTICS M-1PH808/-1PH810/-1PH813/-1PH816 motors with terminal box on SINAMICS S120 Power Modules

Motor SIMOTICS	Thread	No. of cores × cross-section mm²	Connection method Power Module end	**Pre-assembled cable** Article No.	**Cable sold by the meter** [1] Article No.	D_{max} mm (in)	Weight (without gland) kg/m (lb/ft)	Smallest bending radius [2] mm (in)
M-1PH808	M25	4 × 2.5	Exposed core ends [3]	**6FX8002-5CR10-....** –	**6FX8008-1BB21-....** **6FX5008-1BB21-....**	11.0 (0.43) 10.0 (0.39)	0.20 (0.13) 0.21 (0.69)	90 (3.54) 180 (7.09)
		4 × 4		**6FX8002-5CR20-....** –	**6FX8008-1BB31-....** **6FX5008-1BB31-....**	12.3 (0.48) 11.4 (0.45)	0.27 (0.18) 0.27 (0.18)	100 (3.94) 210 (8.27)
M-1PH810	M32	4 × 2.5	Exposed core ends [3]	**6FX8002-5CR11-....** –	**6FX8008-1BB21-....** **6FX5008-1BB21-....**	11.0 (0.43) 10.0 (0.39)	0.20 (0.13) 0.21 (0.69)	90 (3.54) 180 (7.09)
		4 × 4		**6FX8002-5CR21-....** –	**6FX8008-1BB31-....** **6FX5008-1BB31-....**	12.3 (0.48) 11.4 (0.45)	0.27 (0.18) 0.27 (0.18)	100 (3.94) 210 (8.27)
		4 × 10		**6FX8002-5CR41-....** –	**6FX8008-1BB51-....** **6FX5008-1BB51-....**	18.2 (0.72) 20.0 (0.79)	0.62 (0.42) 0.73 (0.49)	140 (5.51) 360 (14.17)
M-1PH813	M40	4 × 10	Exposed core ends [3]	**6FX8002-5CR42-....** –	**6FX8008-1BB51-....** **6FX5008-1BB51-....**	18.2 (0.72) 20.0 (0.79)	0.62 (0.42) 0.73 (0.49)	140 (5.51) 360 (14.17)
	M50			**6FX8002-5CR43-....** –				
	M40	4 × 16		**6FX8002-5CR52-....** –	**6FX8008-1BB61-....** **6FX5008-1BB61-....**	22.3 (0.88) 24.2 (0.95)	1.01 (0.68) 1.10 (0.74)	170 (6.69) 440 (17.32)
	M50			**6FX8002-5CR53-....** –				
	M40	4 × 35		**6FX5002-5CR72-....**	**6FX5008-1BB35-....**	31.5 (1.24)	1.93 (1.30)	570 (22.44)
	M50			**6FX5002-5CR73-....**	**6FX8008-1BA35-....**	29.6 (1.17)	2.00 (1.34)	300 (11.81)
	M50	4 × 50		**6FX5002-5CR83-....**	**6FX5008-1BB50-....** **6FX8008-1BA50-....**	38.0 (1.50) 34.4 (1.35)	3.04 (2.04) 2.66 (1.79)	685 (26.97) 345 (13.58)
M-1PH816	M50	4 × 16	Exposed core ends [3]	**6FX8002-5CR53-....** –	**6FX8008-1BB61-....** **6FX5008-1BB61-....**	22.3 (0.88) 24.2 (0.95)	1.01 (0.68) 1.10 (0.74)	170 (6.69) 440 (17.32)
		4 × 35		**6FX5002-5CR73-....**	**6FX5008-1BB35-....** **6FX8008-1BA35-....**	31.5 (1.24) 29.6 (1.17)	1.93 (1.30) 2.00 (1.34)	570 (22.44) 300 (11.81)
		4 × 50		**6FX5002-5CR83-....**	**6FX5008-1BB50-....** **6FX8008-1BA50-....**	38.0 (1.50) 34.4 (1.35)	3.04 (2.04) 2.66 (1.79)	685 (26.97) 345 (13.58)
	M63	4 × 25		–	**6FX5008-1BB25-....** **6FX8008-1BA25-....**	28.0 (1.10) 27.6 (1.09)	1.62 (1.09) 1.51 (1.01)	505 (19.88) 280 (11.02)
		4 × 35		–	**6FX5008-1BB35-....** **6FX8008-1BA35-....**	31.5 (1.24) 29.6 (1.17)	1.93 (1.30) 2.00 (1.34)	570 (22.44) 300 (11.81)
		4 × 50		–	**6FX5008-1BB50-....** **6FX8008-1BA50-....**	38.0 (1.50) 34.4 (1.35)	3.04 (2.04) 2.66 (1.79)	685 (26.97) 345 (13.58)
		4 × 70		–	**6FX5008-1BB70-....**	42.6 (1.68)	3.96 (2.66)	770 (30.31)

MOTION-CONNECT 500	**5**				**5**	
MOTION-CONNECT 800PLUS	**8**				**8**	
Length code			**....**			**....**

[1] Note type of delivery.
[2] Valid for installation in a cable carrier.
[3] Length of core ends: 300 mm (11.81). 4 M8 cable lugs and 4 M6 cable lugs are also included in the scope of supply of the cables.

© Siemens AG 2017

Selection and ordering data (continued)

For SIMOTICS M-1PH808/-1PH810 motors with terminal box on SINAMICS S120 Motor Modules in booksize compact format

Motor	Thread	No. of cores × cross-section	Connection method Power Module end	**Pre-assembled cable**	**Cable sold by the meter** [1]	D_{max}	Weight (without gland)	Smallest bending radius [2]
SIMOTICS		mm²		Article No.	Article No.	mm (in)	kg/m (lb/ft)	mm (in)
M-1PH808	M25	4 × 2.5	Exposed core ends [3]	**6FX8002-5CR10-....**	**6FX8008-1BB21-....**	11.0 (0.43)	0.20 (0.13)	90 (3.54)
M-1PH810	M32	4 × 2.5	Exposed core ends [3]	**6FX8002-5CR11-....**	**6FX8008-1BB21-....**	11.0 (0.43)	0.20 (0.13)	90 (3.54)

MOTION-CONNECT 500				**5**			**5**	
MOTION-CONNECT 800PLUS				**8**			**8**	
Length code					**....**			**....**

Other cables sold by the meter for SIMOTICS M-1PH818/-1PH822 motors with terminal box

		No. of cores × Cross-section	Connection method Motor Module end	**Pre-assembled cable**	**Cable sold by the meter** [1]	D_{max}	Weight (without gland)	Smallest bending radius [2]
		mm²		Article No.	Article No.	mm (in)	kg/m (lb/ft)	mm (in)
		4 × 95		–	**6FX5008-1BB05-....**	51.7 (2.04)	5.55 (3.73)	935 (36.81)
		4 × 120		–	**6FX5008-1BB12-....**	56 (2.20)	6.60 (4.43)	1010 (39.76)

MOTION-CONNECT 500							**5**	
Length code								**....**

[1] Note type of delivery.
[2] Valid for installation in a cable carrier.
[3] Length of core ends: 300 mm (11.81). 4 M8 cable lugs and 4 M6 cable lugs are also included in the scope of supply of the cables.

© Siemens AG 2017

Selection and ordering data

For SIMOTICS L-1FN3 linear motors, peak/continuous load versions, connection to SINAMICS S120 through adapter cable with full-thread connector

No. of cores × cross-section	Thread	**Pre-assembled adapter cable**	Connector size Interface	**Pre-assembled basic cable to the drive system**	**Cable sold by the meter [1] for pre-assembled adapter cable**	D_{max}	Weight (without connector)	Smallest bending radius [2]
mm²		Article No. [3]		Article No.	Article No.	mm (in)	kg/m (lb/ft)	mm (in)
4 × 2.5	M20	**6FX7002-5LM42-....** [4]	1	**6FX80■2-5CS16-....**	**6FX8008-1BB21-....**	11.0 (0.43)	0.20 (0.13)	90 (3.54)
4 × 2.5	M20	**6FX7002-5LM62-....** [5]	1	**6FX80■2-5CS16-....**	**6FX8008-1BB21-....**	11.0 (0.43)	0.20 (0.13)	90 (3.54)
4 × 4	M32	**6FX7002-5LM72-....**	1.5	**6FX80■2-5CS46-....** [6]	**6FX8008-1BB31-....**	12.3 (0.48)	0.27 (0.18)	100 (3.94)
4 × 6	M32	**6FX7002-5LM82-....**	1.5	**6FX8002-5CS54-....**	**6FX8008-1BB41-....**	14.9 (0.59)	0.41 (0.28)	120 (4.72)
4 × 10	M32	**6FX7002-5LM32-....**	1.5	**6FX8002-5CS64-....**	**6FX8008-1BB51-....**	18.2 (0.72)	0.62 (0.42)	140 (5.51)
4 × 16	M32	**6FX7002-5LM02-....**	1.5	**6FX8002-5CS24-....**	**6FX8008-1BB61-....**	22.3 (0.88)	1.01 (0.68)	170 (6.69)

MOTION-CONNECT 700	**7**											
MOTION-CONNECT 800PLUS					**8**					**8**		
Power cable												
Pre-assembled						**0**						
Connector at module end supplied separately						**1**						
Connector at module end not supplied						**2**						
Connector at motor end supplied separately						**4**						
Length code			**....**					**....**				**....**

Accessories

Power cable extensions for SIMOTICS L-1FN3 linear motors, peak/continuous load versions with full-thread connector

No. of cores × cross-section	Connector size	Pre-assembled basic cable to the drive system	**Extension**
mm²		Type	Article No.
4 × 2.5	1	6FX8002-5CS16-....	**6FX8002-5CA15-....**
4 × 4	1.5	6FX8002-5CS46-.... [6]	**6FX8002-5CA48-....**
4 × 6	1.5	6FX8002-5CS54-....	**6FX8002-5CA58-....**
4 × 10	1.5	6FX8002-5CS64-....	**6FX8002-5CA68-....**
4 × 16	1.5	6FX8002-5CS24-....	**6FX8002-5YW12-....**

MOTION-CONNECT 800PLUS										**8**		
Length code												**....**

The combinations of power cable extensions shown are only provided by way of example.

[1] Note type of delivery.
[2] Valid for installation in a cable carrier.
[3] The 6FX7002-5LM.. cables comprise MOTION-CONNECT 800PLUS cables which are sold by the meter.
[4] For SIMOTICS L-1FN30/-1FN31 motors only.
[5] For SIMOTICS L-1FN33/-1FN34/-1FN36/-1FN39 motors only.
[6] For SIMOTICS L-1FN3 linear motors in the peak load version, the pre-assembled basic cable 6FX8002-5CS54-.... (4 × 6 mm²) to the SINAMICS S120 drive system must be used.

© Siemens AG 2017

Selection and ordering data

For SIMOTICS T-1FW3 complete torque motors with terminal box

No. of cores × cross-section	**Cable sold by the meter** [1]	D_{max}		Weight (without connector)		Smallest bending radius [2]	
		6FX5	**6FX8**	**6FX5**	**6FX8**	**6FX5**	**6FX8**
mm²	Article No.	mm (in)	mm (in)	kg/m (lb/ft)	kg/m (lb/ft)	mm (in)	mm (in)
4 × 1.5	**6FX■008-1BB11-....**	8.4 (0.33)	9.5 (0.37)	0.12 (0.08)	0.15 (0.10)	155 (6.10)	75 (2.95)
4 × 2.5	**6FX■008-1BB21-....**	10.0 (0.39)	11.0 (0.43)	0.21 (0.69)	0.20 (0.13)	180 (7.09)	90 (3.54)
4 × 4	**6FX■008-1BB31-....**	11.4 (0.45)	12.3 (0.48)	0.27 (0.18)	0.27 (0.18)	210 (8.27)	100 (3.94)
4 × 6	**6FX■008-1BB41-....**	13.6 (0.54)	14.9 (0.59)	0.37 (0.25)	0.41 (0.28)	245 (9.65)	120 (4.72)
4 × 10	**6FX■008-1BB51-....**	20.0 (0.79)	18.2 (0.72)	0.73 (0.49)	0.62 (0.42)	360 (14.17)	140 (5.51)
4 × 16	**6FX■008-1BB61-....**	24.2 (0.95)	22.3 (0.88)	1.10 (0.74)	1.01 (0.68)	440 (17.32)	170 (6.69)
4 × 25	**6FX5008-1BB25-....**	28.0 (1.10)	–	1.62 (1.09)	–	505 (19.88)	–
4 × 35	**6FX5008-1BB35-....**	31.5 (1.24)	–	1.93 (1.30)	–	570 (22.44)	–
4 × 50	**6FX5008-1BB50-....**	38.0 (1.50)	–	3.04 (2.04)	–	685 (26.97)	–
4 × 70	**6FX5008-1BB70-....**	42.6 (1.68)	–	3.96 (2.66)	–	770 (30.31)	–
4 × 95	**6FX5008-1BB05-....**	51.7 (2.04)	–	5.55 (3.73)	–	935 (36.81)	–
4 × 120	**6FX5008-1BB12-....**	56.0 (2.20)	–	6.60 (4.43)	–	1010 (39.76)	–

MOTION-CONNECT 500	**5**	
MOTION-CONNECT 800PLUS	**8**	
Length code		**....**

[1] Note type of delivery.
[2] Valid for installation in a cable carrier.

© Siemens AG 2017

Selection and ordering data

For SIMOTICS T-1FW6 built-in torque motors with connection via adapter cable with full-thread connector

No. of cores × Cross-section	Connector size, Motor end	**Pre-assembled cable to the drive system**	**Cable sold by the meter** [1]	D_{max}	Weight (without connector)	Smallest bending radius [2]
mm²		Article No.	Article No.	mm (in)	kg/m (lb/ft)	mm (in)
4 × 2.5	1	**6FX80■2-5CS16-....**	**6FX8008-1BB21-....**	11.0 (0.43)	0.20 (0.13)	90 (3.54)
4 × 4	1.5	**6FX80■2-5CS46-....**	**6FX8008-1BB31-....**	12.3 (0.48)	0.27 (0.18)	100 (3.94)
4 × 6	1.5	**6FX8002-5CS54-....**	**6FX8008-1BB41-....**	14.9 (0.59)	0.41 (0.28)	120 (4.72)
		6FX8042-5CS54-....				
4 × 10	1.5	**6FX8002-5CS64-....**	**6FX8008-1BB51-....**	18.2 (0.72)	0.62 (0.42)	140 (5.51)
		6FX8042-5CS64-....				
4 × 16	1.5	**6FX8002-5CS24-....**	**6FX8008-1BB61-....**	22.3 (0.88)	1.01 (0.68)	170 (6.69)
		6FX8042-5CS24-....				

MOTION-CONNECT 800PLUS	**8**			**8**	
Power cable					
Pre-assembled	**0**				
Connector at module end supplied separately	**1**				
Connector at module end not supplied	**2**				
Connector at motor end supplied separately	**4**				
Length code		**....**			**....**

Accessories

Power cable extensions for SIMOTICS T-1FW6 built-in torque motors with full-thread connector

No. of cores × cross-section	Connector size	Pre-assembled cable to the drive system	**Extension**
mm²		Type	Article No.
4 × 2.5	1	6FX8002-5CS16-....	**6FX8002-5CA15-....**
4 × 4	1.5	6FX8002-5CS46-....	**6FX8002-5CA48-....**
4 × 6	1.5	6FX8002-5CS54-....	**6FX8002-5CA58-....**
4 × 10	1.5	6FX8002-5CS64-....	**6FX8002-5CA68-....**
4 × 16	1.5	6FX8002-5CS24-....	**6FX8002-5YW12-....**

MOTION-CONNECT 800PLUS	**8**	
Length code		**....**

The combinations of power cable extensions shown are only provided by way of example.

[1] Note type of delivery.
[2] Valid for installation in a cable carrier.

© Siemens AG 2017

Selection and ordering data

For SINAMICS S120M distributed servo drive with AM600 adapter module

Connection method SINAMICS S120M	No. of cores × cross-section	for outgoing directions	**Pre-assembled cable**	D_{max}	Weight (without connector)	Smallest bending radius [1]
	mm²/AWG		Article No.	mm (in)	kg/m (lb/ft)	mm (in)
Connector	4 × 2.5+ 3 × 4+ 4 × AWG22	Non-drive end (rear)/ non-drive end (rear)	**6FX8002-7HY00-....**	15 (0.59)	0.35 (0.24)	112.5 (4.43)
		Non-drive end (rear)/ drive end (front)	**6FX8002-7HY11-....**			
		Drive end (front)/ drive end (front)	**6FX8002-7HY22-....**			
MOTION-CONNECT 800PLUS			**8**			
Length code			**....**			

[1] Valid for installation in a cable carrier.

© Siemens AG 2017

Overview

MOTION-CONNECT DRIVE-CLiQ signal cable with IP20/IP67 connector

Signal cables are pre-assembled and are sold by the meter for connecting a variety of components.

The following different types of cable are available:

- DRIVE-CLiQ signal cables
- MOTION-CONNECT DRIVE-CLiQ signal cables
- MOTION-CONNECT pre-assembled signal cables

Type of delivery for pre-assembled signal cables

Pre-assembled signal cables are available in units of 10 cm (3.94 in).

The cables are supplied on reels up to 30 kg or 100 m (66.2 lb or 328 ft). Above 30 kg or 100 m (66.2 lb or 328 ft), cable drums are used instead of reels.

Application

DRIVE-CLiQ signal cables without 24 V DC cores

are used to connect components with DRIVE-CLiQ connections which have a separate or external
24 V DC power supply.

MOTION-CONNECT DRIVE-CLiQ signal cables with 24 V DC cores

are used whenever components with DRIVE-CLiQ connections must meet high requirements such as mechanical stress and oil resistance, e.g., where a connection is made outside the cabinet between Power Modules, Motor Modules, and
SIMOTICS S-1FK7/SIMOTICS M-1PH8 motors with DRIVE-CLiQ interface.

MOTION-CONNECT pre-assembled signal cables

are used whenever motor encoders on motors without DRIVE-CLiQ interface need to be connected to Sensor Modules.

Design

If pre-assembled signal cables are to be installed in a cable carrier in such a way that the connector would inhibit assembly, pre-assembled cables without assembled connector can also be supplied. In this case, the contacts of the cables are crimped and the connector enclosure is supplied separately. After installing the cables, the customer assembles the connector enclosure.

The 6FX.002-2....-.... signal cables are available with crimped contacts and with the connector enclosure supplied separately (not in the case of DRIVE-CLiQ signal cables and signal cables with exposed core ends).

Signal cables with separately supplied **module-end** connector: in this case, the 6th position of the Article No. must be changed from **0** to **1**:
6FX.0**1**2-2C...-.... (not for signal cables for connecting via terminals or 6FX.002-2AH00-...., 6FX.002-2CA12-....).

Signal cables with separately supplied **motor-end** connector: in this case, the 6th position of the Article No. must be changed from **0** to **4**:
6FX.0**4**2-2C...-.... (not for signal cables for connecting via terminals or 6FX8002-2BA20-...., 6FX8002-2BA21-....).

Note:

Once the contacts have latched into the insulator, they can no longer be removed.

© Siemens AG 2017

Technical specifications

DRIVE-CLiQ signal cables	DRIVE-CLiQ 6FX2...-1DC..-....	DRIVE-CLiQ MOTION-CONNECT 500 6FX5...-.DC..-....	DRIVE-CLiQ MOTION-CONNECT 800PLUS 6FX8...-.DC..-....
Certificate of suitability			
• cURus or UR/CSA	UL STYLE 2502/CSA-N.210.2-M90	UL STYLE 2502/CSA-N.210.2-M90	UL STYLE 2502/CSA-N.210.2-M90
• UR-CSA File No. [1]	Yes	Yes	Yes
• RoHS conformity	Yes	Yes	Yes
Rated voltage according to EN 50395	30 V	30 V	30 V
Test voltage, rms	500 V	500 V	500 V
Operating temperature on the surface			
• Fixed installation	-20 … +80 °C (-4 ... +176 °F)	-20 … +80 °C (-4 ... +176 °F)	-20 … +80 °C (-4 ... +176 °F)
• Flexible installation	–	0 … 60 °C (32 ... 140 °F)	-20 … +60 °C (-4 ... +140 °F)
Tensile stress, max.			
• Fixed installation	45 N/mm^2 (6526 lb/in^2)	80 N/mm^2 (11603 lb/in^2)	50 N/mm^2 (7252 lb/in^2)
• Flexible installation	–	30 N/mm^2 (4351 lb/in^2)	20 N/mm^2 (2901 lb/in^2)
Smallest bending radius			
• Fixed installation	50 mm (1.97 in)	35 mm (1.38 in)	35 mm (1.38 in)
• Flexible installation	–	125 mm (4.92 in)	75 mm (2.95 in)
Torsional stress	–	Absolute 30°/m	Absolute 30°/m
Bending	–	100000	10 million
Traversing velocity	–	30 m/min (98.4 ft/min)	300 m/min (984 ft/min)
Acceleration	–	2 m/s^2 (6.56 ft/s^2)	Up to 50 m/s^2 (164 ft/s^2), see characteristics on page 12/5
Insulation material, incl. jacket	CFC/silicone-free	CFC/silicone-free	CFC/halogen-free/silicon-free IEC 60754-1/DIN VDE 0472-815
Oil resistance	EN 60811-2-1	EN 60811-2-1 (mineral oil only)	EN 60811-2-1
Outer jacket	PVC Gray RAL 7032	PVC DESINA color green RAL 6018	PUR, HD22.10 S2 (VDE 0282, Part 10) DESINA color green RAL 6018
Flame-retardant	EN 60332-1-1 to 1-3	EN 60332-1-1 to 1-3	EN 60332-1-1 to 1-3

Degree of protection of the pre-assembled signal cables and their extensions when closed and inserted: IP67.

[1] The File No. is printed on the cable jacket.

© Siemens AG 2017

Technical specifications (continued)

Signal cables	**MOTION-CONNECT 500** 6FX50..-.....-....	**MOTION-CONNECT 800PLUS** 6FX80..-.....-....
Certificate of suitability		
• cURus or UR/CSA	UL758-CSA-C22.2-N.210.2-M90	UL758-CSA-C22.2-N.210.2-M90
• UR-CSA File No. [1]	Yes	Yes
• RoHS conformity	Yes	Yes
Rated voltage according to EN 50395	30 V	30 V
Test voltage, rms	500 V	500 V
Operating temperature on the surface		
• Fixed installation	-20 … +80 °C (-4 ... +176 °F)	-50 … +80 °C (-58 ... +176 °F)
• Flexible installation	0 … 60 °C (32 ... 140 °F)	-20 … +60 °C (-4 ... +140 °F)
Tensile stress, max.		
• Fixed installation	50 N/mm^2 (7252 lb/in^2)	50 N/mm^2 (7252 lb/in^2)
• Flexible installation	20 N/mm^2 (2901 lb/in^2)	20 N/mm^2 (2901 lb/in^2)
Smallest bending radius		
• Fixed installation	60 mm (2.36 in)	4 × D_{max}
• Flexible installation	100 mm (3.94 in)	70 mm [2] (2.75 in)
Torsional stress	Absolute 30°/m	Absolute 30°/m
Bending	2 million	10 million
Traversing velocity	180 m/min (591 ft/min)	Up to 300 m/min (984 ft/min)
Acceleration	5 m/s^2 (16.41 ft/s^2)	Up to 50 m/s^2 (164 ft/s^2), see characteristics on page 12/5
Insulation material, incl. jacket	CFC/silicone-free	CFC/halogen-free/silicon-free IEC 60754-1/DIN VDE 0472-815
Oil resistance	EN 60811-2-1 (mineral oil only)	EN 60811-2-1
Outer jacket	PVC DESINA color green RAL 6018	PUR, HD22.10 S2 (VDE 0282, Part 10) DESINA color green RAL 6018
Flame-retardant	EN 60332-1-1 to 1-3	EN 60332-1-1 to 1-3

Degree of protection of the pre-assembled signal cables and their extensions when closed and inserted: IP67.

[1] The File No. is printed on the cable jacket.
[2] Exception: 6FX8002-2SL..-....; smallest bending radius (flexible): 85 mm (3.35 in).

© Siemens AG 2017

Selection and ordering data

Pre-assembled DRIVE-CLiQ signal cables without 24 V DC cores

Version	Length m (ft)	D_{max} mm (in)	Connector/degree of protection, module-end	Connector/degree of protection, motor-end	**DRIVE-CLiQ signal cable** without 24 V DC cores Article No.
Fixed lengths 	0.11 (0.36)		RJ45/IP20	RJ45/IP20	**6SL3060-4AB00-0AA0**
	0.16 (0.52)				**6SL3060-4AD00-0AA0**
	0.21 (0.69)				**6SL3060-4AF00-0AA0**
	0.26 (0.85)				**6SL3060-4AH00-0AA0**
	0.31 (1.02)				**6SL3060-4AK00-0AA0**
	0.36 (1.18)				**6SL3060-4AM00-0AA0**
	0.41 (1.35)				**6SL3060-4AP00-0AA0**
	0.60 (1.97)				**6SL3060-4AU00-0AA0**
	0.95 (3.12)				**6SL3060-4AA10-0AA0**
	1.20 (3.94)				**6SL3060-4AW00-0AA0**
	1.45 (4.76)				**6SL3060-4AF10-0AA0**
	2.10 (6.89)				**6SL3060-4AB20-0AA0**
	2.80 (9.19)				**6SL3060-4AJ20-0AA0**
	5.00 (16.4)				**6SL3060-4AA50-0AA0**
To the decimeter 	Max. 70 (230)	7.0 (0.28)	RJ45/IP20	RJ45/IP20	**6FX2002-1DC00-....**
To the decimeter 	Max. 70 (230)	7.0 (0.28)	RJ45/IP67	RJ45/IP67	**6FX2002-1DC20-....**
Length code					**....**

© Siemens AG 2017

Selection and ordering data

Pre-assembled MOTION-CONNECT DRIVE-CLiQ signal cables for SINAMICS S120 and motors with 24 V DC cores

Version	Usage	Length, max.	D_{max}	Connector/ degree of protection, module-end	Connector/ degree of protection, motor-end	**MOTION-CONNECT DRIVE-CLiQ signal cable** with 24 V DC cores
		m (ft)	mm (in)			Article No.
To the decimeter	For components with DRIVE-CLiQ interface in the control cabinet.	100 (328)	7.1 (0.28)	RJ45/IP20	RJ45/IP20	**6FX5002-2DC00-....**
	For example, for making the connection between SINAMICS S120 Motor Modules or Power Modules and the DRIVE-CLiQ cabinet bushing.	75 (246)	7.1 (0.28)	RJ45/IP20	RJ45/IP20	**6FX8002-2DC00-....**
To the decimeter	For built-in or built-on encoder systems with DRIVE-CLiQ interface.	100 (3.28)	7.1 (0.28)	RJ45/IP20	RJ45/IP67	**6FX5002-2DC10-....**
	For example, for making the connection between SIMOTICS S-1FT7/-1FK7/ SIMOTICS M-1PH8/SIMOTICS T-1FW3 motors and SINAMICS S120 Motor Modules or Power Modules.	75 (246)	7.1 (0.28)	RJ45/IP20	RJ45/IP67	**6FX8002-2DC10-....**
To the decimeter	For built-in or built-on encoder systems with DRIVE-CLiQ interface.	100 (328)	7.1 (0.28)	RJ45/IP67	RJ45/IP67	**6FX5002-2DC20-....**
	For example, for making the connection between SIMOTICS S-1FT7/-1FK7/SIMOTICS M-1PH8/ SIMOTICS T-1FW3 motors and SINAMICS S120 via DRIVE-CLiQ cabinet bushings, couplings or DME20, or 2 couplings or DME20.	75 (246)	7.1 (0.28)	RJ45/IP67	RJ45/IP67	**6FX8002-2DC20-....**

MOTION-CONNECT 500	**5**
MOTION-CONNECT 800PLUS	**8**
Length code	**....**

© Siemens AG 2017

Selection and ordering data

Pre-assembled MOTION-CONNECT DRIVE-CLiQ signal cables for SINAMICS S120 and direct measuring systems *with 24 V DC cores and M12 connection*

Version	Usage	Length, max. m (ft)	D_{max} mm (in)	Connector/ degree of protection, module-end	Connector/ degree of protection, motor-end	**MOTION-CONNECT DRIVE-CLiQ signal cable** with 24 V DC cores Article No.
Fixed lengths 6FX.002-2DC30-.... 6FX.002-2DC36-....	For encoder systems with DRIVE-CLiQ and M12 connection. For example, as a basic cable between non-Siemens direct measuring systems with DRIVE-CLiQ interface and SINAMICS S120 Motor Modules and Power Modules. Cable lengths available to order:	30 (98.4)	7.1 (0.28)		M12/IP67	
	1 m (3.28 ft)					**6FX■002-2DC3■-1AB0**
	2 m (6.56 ft)					**6FX■002-2DC3■-1AC0**
	3 m (9.84 ft)					**6FX■002-2DC3■-1AD0**
	4 m (13.1 ft)					**6FX■002-2DC3■-1AE0**
	5 m (16.4 ft)					**6FX■002-2DC3■-1AF0**
	6 m (19.7 ft)					**6FX■002-2DC3■-1AG0**
	7 m (23.0 ft)					**6FX■002-2DC3■-1AH0**
	8 m (26.2 ft)					**6FX■002-2DC3■-1AJ0**
	9 m (29.5 ft)					**6FX■002-2DC3■-1AK0**
	10 m (32.8 ft)					**6FX■002-2DC3■-1BA0**
	11 m (36.1 ft)					**6FX■002-2DC3■-1BB0**
	12 m (39.4 ft)					**6FX■002-2DC3■-1BC0**
	13 m (42.7 ft)					**6FX■002-2DC3■-1BD0**
	14 m (45.9 ft)					**6FX■002-2DC3■-1BE0**
	15 m (49.2 ft)					**6FX■002-2DC3■-1BF0**
	16 m (52.5 ft)					**6FX■002-2DC3■-1BG0**
	17 m (55.8 ft)					**6FX■002-2DC3■-1BH0**
	18 m (59.1 ft)					**6FX■002-2DC3■-1BJ0**
	19 m (62.3 ft)					**6FX■002-2DC3■-1BK0**
	20 m (65.6 ft)					**6FX■002-2DC3■-1CA0**
	25 m (82.0 ft)					**6FX■002-2DC3■-1CF0**
	30 m (98.4 ft)					**6FX■002-2DC3■-1DA0**
Fixed lengths	For example, as an extension to the basic cable 6FX.002-2DC30-.... or 6FX.002-2DC36-.... Cable lengths available to order:	[1]	7.1 (0.28)	M12/IP67	M12/IP67	
	3 m (9.84 ft)					**6FX■002-2DC34-1AD0**
	6 m (19.7 ft)					**6FX■002-2DC34-1AG0**

MOTION-CONNECT 500		**5**
MOTION-CONNECT 800PLUS		**8**
Connector/degree of protection, module-end	RJ45/IP20	**0**
Connector/degree of protection, module-end	RJ45/IP67	**6**

[1] The total cable length (basic cable plus extension cable) must not exceed 30 m (98.4 ft).

© Siemens AG 2017

Selection and ordering data

Pre-assembled MOTION-CONNECT DRIVE-CLiQ signal cables with 24 V DC cores and M17 connection for SIMOTICS S-1FT7/-1FK7 motors with option N16

Version	Motor	Length, max.	D_{max}	Connector/ degree of protection, module-end	Connector/ degree of protection, motor-end	**Basic cable**	**Extension**
	SIMOTICS	m (ft)	mm (in)			Article No.	Article No.
To the decimeter	S-1FT7 [1]/-1FK7	100 (328)	7.1 (0.28)	RJ45/IP20	M17/IP67 [2]	**6FX5002-2D■40-....**	**6FX5002-2D■44-....**
	S-1FT7 [1]/-1FK7	75 (246)	7.1 (0.28)	RJ45/IP20	M17/IP67 [2]	**6FX8002-2D■40-....**	**6FX8002-2D■44-....**
To the decimeter	S-1FT7 [1]/-1FK7	100 (328)	7.1 (0.28)	M17/IP67 [2]	RJ45/IP67 [3]	**6FX5002-2DC42-....**	**6FX5002-2DC44-....**
	S-1FT7 [1]/-1FK7	75 (246)	7.1 (0.28)	M17/IP67 [2]	RJ45/IP67 [3]	**6FX8002-2DC42-....**	**6FX8002-2DC44-....**
To the decimeter	S-1FT7 [1]/-1FK7	100 (328)	7.1 (0.28)	M17/IP67 [2]	M17/IP67 [2]	**6FX5002-2D■44-....**	**6FX5002-2D■44-....**
	S-1FT7 [1]/-1FK7	75 (246)	7.1 (0.28)	M17/IP67 [2]	M17/IP67 [2]	**6FX8002-2D■44-....**	**6FX8002-2D■44-....**
Fixed lengths 1 ... 20/25/30 m (3.28 ... 65/82/98 ft)	S-1FT7 [1]/-1FK7	100 (328)	7.1 (0.28)	M17/IP67 [2]	M12/IP67 [4]	**6FX5002-2DC46-....**	**6FX5002-2DC44-....**
	S-1FT7 [1]/-1FK7	75 (246)	7.1 (0.28)	M17/IP67 [2]	M12/IP67 [4]	**6FX8002-2DC46-....**	**6FX8002-2DC44-....**
To the decimeter	S-1FT7 [1]/-1FK7	100 (328)	7.1 (0.28)	RJ45/IP67 [3]	M17/IP67 [2]	**6FX5002-2D■48-....**	**6FX5002-2D■44-....**
	S-1FT7 [1]/-1FK7	75 (246)	7.1 (0.28)	RJ45/IP67 [3]	M17/IP67 [2]	**6FX8002-2D■48-....**	**6FX8002-2D■44-....**

MOTION-CONNECT 500		**5**						**5**			
MOTION-CONNECT 800PLUS		**8**						**8**			
Connector, type:	**SPEED-CONNECT**			**C**						**C**	
Connector, type:	**Full-thread**			**D**						**D**	
Length code						**....**					**....**

The combinations of signal cable extensions shown are only provided by way of example.

The maximum specified cable length (basic cable and extensions) must not be exceeded.

[1] For SIMOTICS S-1FT7, can also be ordered without option 1FT7...-.....-.K.. or 1FT7...-.....-.L..
[2] Max. 4 M17 disconnection points permissible without reduction in maximum total length.
[3] The total maximum length is reduced by 5 m (6.56 ft) for each interruption point.
[4] Max. 3 M12 disconnection points permissible without reduction in maximum total length.

© Siemens AG 2017

Selection and ordering data

Pre-assembled MOTION-CONNECT signal cables for motors with SPEED-CONNECT connector

Encoder system	Motor	Connection via	Length, max.	D_{max}	Degree of protection Connector [1]	**Basic cable**	**Extension**
	SIMOTICS	SINAMICS	m (ft)	mm (in)		Article No.	Article No.
Absolute encoder with EnDat 2.1	S-1FK701	SMC20	50 (164)	9.8 (0.39)	IP20/IP67	**6FX■0■2-2EN20-....**	**6FX8002-2EN24-....**
Absolute encoder with EnDat 2.1	S-1FK7 [2]/-1FT7/ M-1PH8 [3]	SMC20	100 (328)	9.8 (0.39)	IP20/IP67	**6FX■0■2-2EQ31-....**	**6FX■002-2EQ34-....**
Incremental encoder sin/cos 1 V_{pp} 2048 S/R	S-1FK701	SMC20	50 (164)	9.2 (0.36)	IP20/IP67	**6FX■0■2-2CN20-....**	**6FX8002-2CN24-....**
Incremental encoder sin/cos 1 V_{pp} 2048 S/R, with C and D tracks	S-1FK7/-1FT7/ M-1PH8 [3]	SMC20	100 (328)	9.8 (0.39)	IP20/IP67	**6FX■0■2-2CQ31-....**	**6FX■002-2CQ34-....**
Incremental encoder sin/cos 1 V_{pp} 256 and 512 S/R, without C and D tracks	M-1PH8 [3]	SMC20	50 (164)	9.2 (0.36)	IP20/IP67	**6FX80 ■2-2CQ80-....**	**6FX■002-2CQ34-....**
Resolver	S-1FK701	SMC10	130 (426)	9.2 (0.36)	IP20/IP67	**6FX■0■2-2FN20-....**	**6FX8002-2FN24-....**

MOTION-CONNECT 500	**5**				**5**	
MOTION-CONNECT 800PLUS	**8**				**8**	
Signal cable						
Pre-assembled		**0**				
Connector at module end supplied separately		**1**				
Connector at motor end supplied separately		**4**				
Length code			**....**			**....**

[1] The specification for the degree of protection refers to the basic cable.
[2] Not for SIMOTICS S-1FK701 motors.
[3] For SIMOTICS M-1PH808/-1PH810/-1PH813/-1PH816 motors.

© Siemens AG 2017

Selection and ordering data

Pre-assembled signal cables for motors with full-thread connector

Encoder system	Motor	Connection via	Length, max.	D_{max}	Degree of protection Connector [1]	Basic cable	Extension
	SIMOTICS	SINAMICS	m (ft)	mm (in)		Article No.	Article No.
Absolute encoder with EnDat 2.1	M-1PH8/T-1FW3	SMC20	100 (328)	9.8 (0.39)	IP20/IP67	**6FX■0■2-2EQ10-....**	**6FX■002-2EQ14-....**
Absolute encoder with EnDat 2.1 5 V DC		SME25	3 [2] (9.84)	9.2 (0.36)	IP67/IP67	**6FX■0■2-2AD04-....**	**–**
Absolute encoder with EnDat 2.1	L-1FN3/T-1FW6	SME125	3 [2] (9.84)	9.2 (0.36)	IP67/IP67	**6FX80■2-2AD04-....**	**–**
Absolute encoder with EnDat 2.1							
• 6FX2001-5.E..		SMC20	100 (328)	9.2 (0.36)	IP20/IP67	**6FX■0■2-2CH00-....**	**6FX■002-2AD04-....**
• 1XP8014-10/1XP8024-10		SMC20	100 (328)	9.2 (0.36)	IP20/IP67	**6FX■0■2-2CH00-....**	**6FX■002-2AD04-....**
Absolute encoder with SSI 5 V DC		SME25	3 (9.84)	9.2 (0.36)	IP67/IP67	**6FX■0■2-2AD04-....**	**–**
Absolute encoder with SSI 24 V DC							
• 6FX2001-5.S.. Clock-pulse rate 100 ... 250 kHz		SMC30	100 (328)	9.3 (0.37)	IP20/IP67	**6FX■002-2CC11-....**	**6FX■002-2CB54-....**
• 1XP8014-20/1XP8024-20/-21		SMC30	100 (328)	9.3 (0.37)	IP20/IP67	**6FX■0■2-2CC06-....**	**–**
Incremental encoder sin/cos 1 V_{pp} 2048 S/R, with C and D tracks	M-1PH8/ T-1FW3	SMC20	100 (328)	9.8 (0.39)	IP20/IP67	**6FX■0■2-2CA31-....**	**6FX■002-2CA34-....**
Incremental encoder sin/cos 1 V_{pp} 256 and 512 S/R, without C and D tracks	M-1PH8	SMC20	50 (164)	9.2 (0.36)	IP20/IP67	**6FX80■2-2CA80-....**	**6FX■002-2CA34-....**
HTL Incremental encoder	M-1PH8	SMC30	300 [3] (984)	9.3 (0.37)	–/IP67	**6FX■002-2AH00-....** **6FX■042-2AH00-....**	**6FX■002-2AH04-....**
		SMC30	300 [3] (984)	9.3 (0.37)	IP20/IP67	**6FX■0■2-2AH11-....**	**6FX■002-2AH04-....**
HTL Incremental encoder	M-1PH8	CU310-2/ D410-2	100 (328)	9.3 (0.37)	IP20/IP67	**6FX■0■2-2AH11-....**	**–**
Incremental encoder sin/cos 1 V_{pp} without C and D tracks 6FX2001-3		SMC20	50 (164)	9.3 (0.37)	IP20/IP67	**6FX■0■2-2CG00-....**	**6FX■002-2CB54-....**
HTL Incremental encoder, 24 V DC							
• 6FX2001-4		SMC30	100 (328)	9.3 (0.37)	–/IP67	**6FX5002-2CA12-....** **6FX5042-2CA12-....**	**6FX■002-2CB54-....**
• 1XP8012-10/-11, 1XP8032-10/-11/ -12		SMC30	100 (328)	9.3 (0.37)	–/IP67	**6FX5002-2CA12-....** **6FX5042-2CA12-....**	**6FX■002-2CB54-....**
TTL incremental encoder, RS422							
• 6FX2001-2, 5 V DC		SMC30	100 (328)	9.3 (0.37)	IP20/IP67	**6FX■0■2-2CR00-....**	**6FX■002-2CB54-....**
• 1XP8012-20/-21/-22, 1XP8032-20/ -21/-22, 5 V DC		SMC30	100 (328)	9.3 (0.37)	IP20/IP67	**6FX■0■2-2CR00-....**	**6FX■002-2CB54-....**
• 6FX2001-2, 24 V DC		SMC30	100 (328)	9.3 (0.37)	IP20/IP67	**6FX■0■2-2CD24-....**	**6FX■002-2CB54-....**
Incremental encoder sin/cos 1 V_{pp} 5 V DC, without C and D tracks		SME20	3 [2] (9.84)	9.3 (0.37)	IP67/IP67	**6FX■0■2-2CB54-....**	**–**
Direct incremental encoder sin/cos 1 V_{pp}	L-1FN3/T-1FW6	SME120	3 [2] (9.84)	9.3 (0.37)	IP67/IP67	**6FX80■2-2CB54-....**	**–**
Resolver	S-1FK7 [4]/T-1FW3	SMC10	130 (426)	9.2 (0.36)	IP20/IP67	**6FX■0■2-2CF02-....**	**6FX■002-2CF04-....**
Resolver 1XP8013-10/-11/ 1XP8023-10/-11		SMC10	130 (426)	9.2 (0.36)	IP20/IP67	**6FX■0■2-2CF06-....**	**–**

MOTION-CONNECT 500	**5**					**5**			
MOTION-CONNECT 800PLUS	**8**					**8**			
Signal cable									
Pre-assembled		**0**							
Connector at module end supplied separately		**1**							
Connector at motor end supplied separately		**4**							
Length code				**....**					**....**

The combinations of signal cable extensions shown are only provided by way of example.

The maximum specified cable length (basic cable and extensions) must not be exceeded.
The total maximum length is reduced by 2 m (6.56 ft) for each interruption point.

[1] The specification for the degree of protection refers to the basic cable.

[2] Up to 10 m (32.8 ft) possible, depending on the encoder current consumption.

[3] With evaluation of difference signals A*, A, B*, B, otherwise ≤ 100 m (328 ft).

[4] Not for SIMOTICS S-1FK701 motors.

© Siemens AG 2017

Selection and ordering data

Signal cables for temperature sensors with full-thread connector

Temperature sensor	Motor	Connection via	Length, max.	D_{max}	Degree of protection Connec-tor [1]	**Basic cable/ extension** [2]	**Adapter cable** [2]
	SIMOTICS	SINAMICS	m (ft)	mm (in)		Article No.	Article No.
Temperature sensor	L-1FN3100/L-1FN3150 [3]	SME120/SME125	10 (32.8)	11.0 (0.43)	IP67/IP67	**6FX8002-2SL10-....**	**6FX8002-2SL01-....**
Temperature sensor	L-1FN3300 ... L-1FN3900 [3]	SME120/SME125	10 (32.8)	11.0 (0.43)	IP67/IP67	**6FX8002-2SL10-....**	**6FX8002-2SL02-....**
Temperature sensor	T-1FW6	SME120/SME125	10 (32.8)	11.0 (0.43)	IP67/IP67	**6FX8002-2SL10-....**	**–**
Temperature sensor	L-1FN3100/L-1FN3150 [3]	TM120	100 (328)	11.0 (0.43)	–/IP67	**6FX8002-2SL20-....**	**6FX8002-2SL01-....**
Temperature sensor	L-1FN3300 ... L-1FN3900 [3]	TM120	100 (328)	11.0 (0.43)	–/IP67	**6FX8002-2SL20-....**	**6FX8002-2SL02-....**
Temperature sensor	T-1FW6	TM120	100 (328)	11.0 (0.43)	–/IP67	**6FX8002-2SL20-....**	**–**
MOTION-CONNECT 800PLUS						**8**	**8**
Length code						**....**	**....**

The combinations of signal cable extensions shown are only provided by way of example.

The maximum specified cable length (basic cable and extensions) must not be exceeded.
The total maximum length is reduced by 2 m (6.56 ft) for each interruption point.

[1] The specification for the degree of protection refers to the basic cable.
[2] The smallest bending radius (flexible) for signal cables 6FX8002-2SL..-.... is 85 mm (3.35 in).
[3] Continuous load version.

© Siemens AG 2017

Overview

Power cables, pre-assembled

Data position in Article No.	1	2	3	4	5	6	7		8	9	10	11	12		13	14	15	16
MOTION-CONNECT 500	**6**	**F**	**X**	**5**	**0**	■	**2**	**–**	**5**	■	■	■	■	**–**	.	.	.	.
MOTION-CONNECT 800PLUS	**6**	**F**	**X**	**8**	**0**	■	**2**	**–**	**5**	■	■	■	■	**–**	.	.	.	.
Pre-assembled at motor and module ends						**0**												
Pre-assembled at motor end, connector at module end supplied separately						**1**												
Pre-assembled at motor end, connector at module end not supplied						**2**												
Connector at motor end supplied separately, pre-assembled at module end						**4**												
Without brake cores										**C**								
With brake cores										**D**								
Basic cable between / and																		
SINAMICS S120 Motor Module C/D type, booksize format, up to 30 A / Motor connector, full-thread, size 0.5										**D**	**A**	**2**	**7**					
Motor connector, full-thread, size 1 or 1.5											**S**		**6**					
Motor connector, full-thread, size 3											**S**	**1**	**7**					
Motor with terminal box (exposed core ends)											**W**		**2**					
Motor connector, SPEED-CONNECT, size 0.5										**D**	**N**	**2**	**7**					
Motor connector, SPEED-CONNECT, size 1 or 1.5											**N**		**6**					
SINAMICS S120 Motor Module, booksize format, 45 A or higher / Motor connector, full-thread, size 1 or 1.5											**S**		**4**					
Motor connector, full-thread, size 3											**S**	**2**	**3**					
Motor connector, SPEED-CONNECT, size 1 or 1.5											**N**		**4**					
SINAMICS S120 Power Module/ Motor Module, booksize compact format / Motor connector, full-thread, size 0.5										**D**	**A**	**3**	**0**					
Motor connector, full-thread, size 1 or 1.5											**G**		**1**					
Motor connector, full-thread, size 3											**G**		**3**					
Motor connector, SPEED-CONNECT, size 0.5										**D**	**N**	**3**	**0**					
Motor connector, SPEED-CONNECT, size 1											**G**	**1**						
Motor connector, SPEED-CONNECT, size 1.5											**G**	**2**						
SINAMICS S120 Power Module, Combi format [1] / Motor connector, SPEED-CONNECT, size 1 or 1.5											**F**							
SINAMICS S120 Power Module/ Motor Module, booksize format / SIMOTICS M-1PH8 with terminal box										**C**	**R**							
SINAMICS S120 Power Module, Combi format [1] / SIMOTICS M-1PH8 with terminal box										**C**	**E**							
Extension between basic cable with connector / and motor connector																		
Full-thread, size 0.5 / Full-thread, size 0.5										**M**	**E**	**0**	**5**					
Full-thread, size 1 / Full-thread, size 1											**A**		**5**					
Full-thread, size 1.5 / Full-thread, size 1.5											**A**		**8**					
Full-thread, size 3 / Full-thread, size 3											**X**		**8**					
SPEED-CONNECT, size 0.5 / SPEED-CONNECT, size 0.5										**M**	**N**	**0**	**5**					
SPEED-CONNECT, size 1 / SPEED-CONNECT, size 1											**Q**		**5**					
SPEED-CONNECT, size 1.5 / SPEED-CONNECT, size 1.5											**Q**		**8**					
Adapter cable for SIMOTICS L-1FN3	**6**	**F**	**X**	**7**	**0**	**0**	**2**	**–**	**5**	**L**	**M**	.	.	**–**	.	.	.	.
Cross-section												.	.					
Length code																		
Units of 10 cm (3.94 in) or 1 meter (3.28 ft) or in fixed lengths															.	.	.	.

[1] See Industry Mall for MOTION-CONNECT connection system for SINAMICS S120 Combi.

© Siemens AG 2017

Overview (continued)

Power cables, sold by the meter

Data position in Article No.	1	2	3	4	5	6	7		8	9	10	11	12		13	14	15	16
MOTION-CONNECT 500	**6**	**F**	**X**	**5**	**0**	**0**	**8**	**–**	**1**	**B**	■	.	.	**–**	.	.	.	.
MOTION-CONNECT 800PLUS	**6**	**F**	**X**	**8**	**0**	**0**	**8**	**–**	**1**	**B**	■	.	.	**–**	.	.	.	.
Power cable with brake cores, sold by the meter											**A**							
Power cable without brake cores, sold by the meter											**B**							
No. of cores and cross-sections												.	.					
Length code																		
Units of 10 cm (3.94 in) or 1 meter (3.28 ft) or in fixed lengths															.	.	.	.

© Siemens AG 2017

Overview

Data position in Article No.	1	2	3	4	5	6	7		8	9	10	11	12		13	14	15	16
MOTION-CONNECT 500	**6**	**F**	**X**	**5**	**0**	■	**2**	**–**	**2**	■	■	■	■	**–**	.	.	.	.
MOTION-CONNECT 800PLUS	**6**	**F**	**X**	**8**	**0**	■	**2**	**–**	**2**	■	■	■	■	**–**	.	.	.	.
6FX2 cables	**6**	**F**	**X**	**2**	**0**	**0**	**2**	**–**	**1**	**D**	**C**	■	**0**	**–**	.	.	.	.

Pre-assembled at motor and module ends	**0**				
Pre-assembled at motor end, connector at module end supplied separately	**1**				
Connector at motor end supplied separately, pre-assembled at module end	**4**				

Variant: Signal cables for integrated encoder					
DRIVE-CLiQ cables between	and				
Power Module/Motor Module/SMC with IP20 connector	Power Module/Motor Module/SMC with IP20 connector	**D**	**C**	**0**	**0**
Power Module/Motor Module/SMC with IP20 connector	Motor/encoder/SME IP67 connector	**D**	**C**	**1**	**0**
DME20/cabinet bushing/coupler	Motor/encoder/SME IP67 connector	**D**	**C**	**2**	**0**
Basic cable between	and motor with				
SMC20	Incremental encoder (sin/cos 1 V_{pp}), full-thread connector, M23	**C**	**A**	**3**	**1**
SMC30	Incremental encoder (HTL), full-thread connector, M23	**A**	**H**	**0**	**0**
CU310-2	Incremental encoder (HTL), full-thread connector, M23	**A**	**H**	**1**	**1**
SMC20	Absolute encoder, full-thread connector, M23	**E**	**Q**	**1**	**0**
SMC10	Resolver, full-thread connector, M23	**C**	**F**	**0**	**2**
SMC20	Incremental encoder (sin/cos 1 V_{pp}), SPEED-CONNECT connector, M23	**C**	**Q**	**3**	**1**
SMC20	Incremental encoder, SPEED-CONNECT connector, M17	**C**	**N**	**2**	**0**
SMC20	Absolute encoder, SPEED-CONNECT connector, M23	**E**	**Q**	**3**	**1**
SMC20	Absolute encoder, SPEED-CONNECT connector, M17	**E**	**N**	**2**	**0**
SMC10	Resolver, SPEED-CONNECT connector, M17	**F**	**N**	**2**	**0**
Extension between basic cable with connector	and motor connector				
Full-thread or SPEED-CONNECT	Full-thread or SPEED-CONNECT				**4**
Variant: Signal cables for external encoder					
Basic cable between	and				
SMC30	Incremental encoder 6FX2001-2 (TTL/supply 5 V), full-thread connector	**C**	**R**	**0**	**0**
SMC30	Incremental encoder 1XP8012-2./1XP8032-2. (TTL/supply 24 V), full-thread connector	**C**	**D**	**2**	**4**
SMC20	Incremental encoder 6FX2001-3 (sin/cos 1 V_{pp}), full-thread connector	**C**	**G**	**0**	**0**
SMC30	Incremental encoder 6FX2001-4 (HTL), full-thread connector	**C**	**A**	**1**	**2**
SMC30	Incremental encoder 1XP8012-1./1XP8032-1. (HTL), full-thread connector	**C**	**A**	**1**	**2**
SMC30	Absolute encoder with SSI 1XP8014-2./1XP8024-2., full-thread connector	**C**	**C**	**0**	**6**
SMC30	Absolute encoder 6FX2001-5.S (SSI), full-thread connector	**C**	**C**	**1**	**1**
SMC20	Absolute encoder 6FX2001-5.E (EnDat 2.1), full-thread connector	**C**	**H**	**0**	**0**
SMC20	Absolute encoder 1XP8014-10/1XP8024-10 (EnDat 2.1), full-thread connector	**C**	**H**	**0**	**0**
SMC10	Resolver 1XP8013-1./1XP8023-1., full-thread connector	**C**	**F**	**0**	**6**
Extension between basic cable with connector	and motor connector				
Full-thread	Full-thread				**4**

Variant: Signal cables for temperature sensor	**6**	**F**	**X**	**8**	**0**	**0**	**2**	**–**	**2**	**S**	**L**	■	■	**–**	.	.	.	.
Adapter cable with M17 socket on SIMOTICS T-1FW6 terminals												**0**	**0**					
Adapter cable with M17 socket on SIMOTICS L-1FN3100/L-1FN3150												**0**	**1**					
Adapter cable with M17 socket on SIMOTICS L-1FN3300 ... L-1FN3900												**0**	**2**					
Extension to basic cable between SME12x and SIMOTICS L-1FN3/SIMOTICS T-1FW6												**1**	**0**					
Basic cable between TM120 and SIMOTICS L-1FN3/SIMOTICS T-1FW6												**2**	**0**					

Length code				
Units of 10 cm (3.94 in) or 1 meter (3.28 ft) or in fixed lengths	.	.	.	.

© Siemens AG 2017

Length code

Overview

Description	Article No. supplement			
Length code for pre-assembled cables				
	6FX.0.2-.....-	■	■	■	■
0 m	**1**			
100 m (328 ft)	**2**			
200 m (656 ft)	**3**			
0 m		**A**		
10 m (32.8 ft)		**B**		
20 m (65.6 ft)		**C**		
30 m (98.4 ft)		**D**		
40 m (131 ft)		**E**		
50 m (164 ft)		**F**		
60 m (197 ft)		**G**		
70 m (230 ft)		**H**		
80 m (262 ft)		**J**		
90 m (295 ft)		**K**		
0 m			**A**	
1 m (3.28 ft)			**B**	
2 m (6.56 ft)			**C**	
3 m (9.84 ft)			**D**	
4 m (13.1 ft)			**E**	
5 m (16.4 ft)			**F**	
6 m (19.7 ft)			**G**	
7 m (23.0 ft)			**H**	
8 m (26.2 ft)			**J**	
9 m (29.5 ft)			**K**	
0 m				**0**
0.1 m (3.94 in)				**1**
0.2 m (7.87 in)				**2**
0.3 m (11.81 in)				**3**
0.4 m (15.75 in)				**4**
0.5 m (19.96 in)				**5**
0.6 m (23.62 in)				**6**
0.7 m (27.56 in)				**7**
0.8 m (31.5 in)				**8**
Examples:	1.0 m (3.28 ft):	1	A	B	0
	2.2 m (7.22 ft):	1	A	C	2
	8.0 m (26.3 ft):	1	A	J	0
	299.0 m (981 ft):	3	K	K	0

Description	Article No. supplement				
Length code for power and signal cables, sold by the meter [1]					
	6FX.008-.....-	■	■	**A**	**0**
50 m (164 ft)	**1**	**F**		
100 m (328 ft)	**2**	**A**		
200 m (656 ft)	**3**	**A**		
500 m (1641 ft)	**6**	**A**		

More information

Definition of lengths for pre-assembled cables

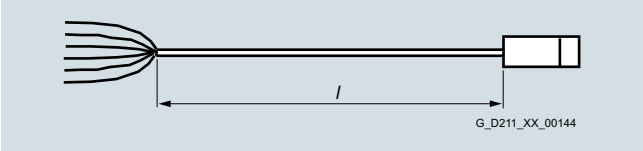

Cable with exposed core ends and pre-assembled connector

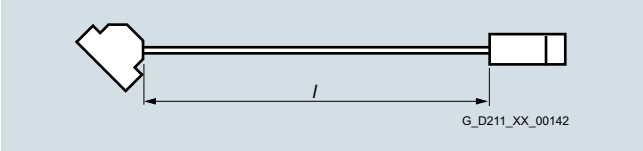

Cable with pre-assembled connectors at both ends

Tolerance:

- Cable lengths up to 10 m (32.8 ft): ± 2%
- Cable lengths of 10 m (32.8 ft) and longer: ± 1%

[1] Note type of delivery. Cables with core cross-section 4 × 4 mm^2 or 4 × 4 mm^2 with brake cores can be delivered in units of 1 m (3.28 ft).

© Siemens AG 2017

Integration

The DRIVE-CLiQ signal cables of type 6SL3060-4A..0-0AA0 required for the standard configuration are part of the scope of supply of the Line Modules and Motor Modules. In this case, the modules must be mounted directly adjacent to one another in a row.

The same components can be connected to the DRIVE-CLiQ interfaces X100-X103 (SIMOTION D425-2, SIMOTION CX32-2) or X100-X105 (SIMOTION D435-2/D445-2/D455-2) as can be connected to the DRIVE-CLiQ interfaces X100-X103 of a CU320-2.

Connection overview of CU320-2 Control Unit with SINAMICS S120 in booksize compact and booksize formats

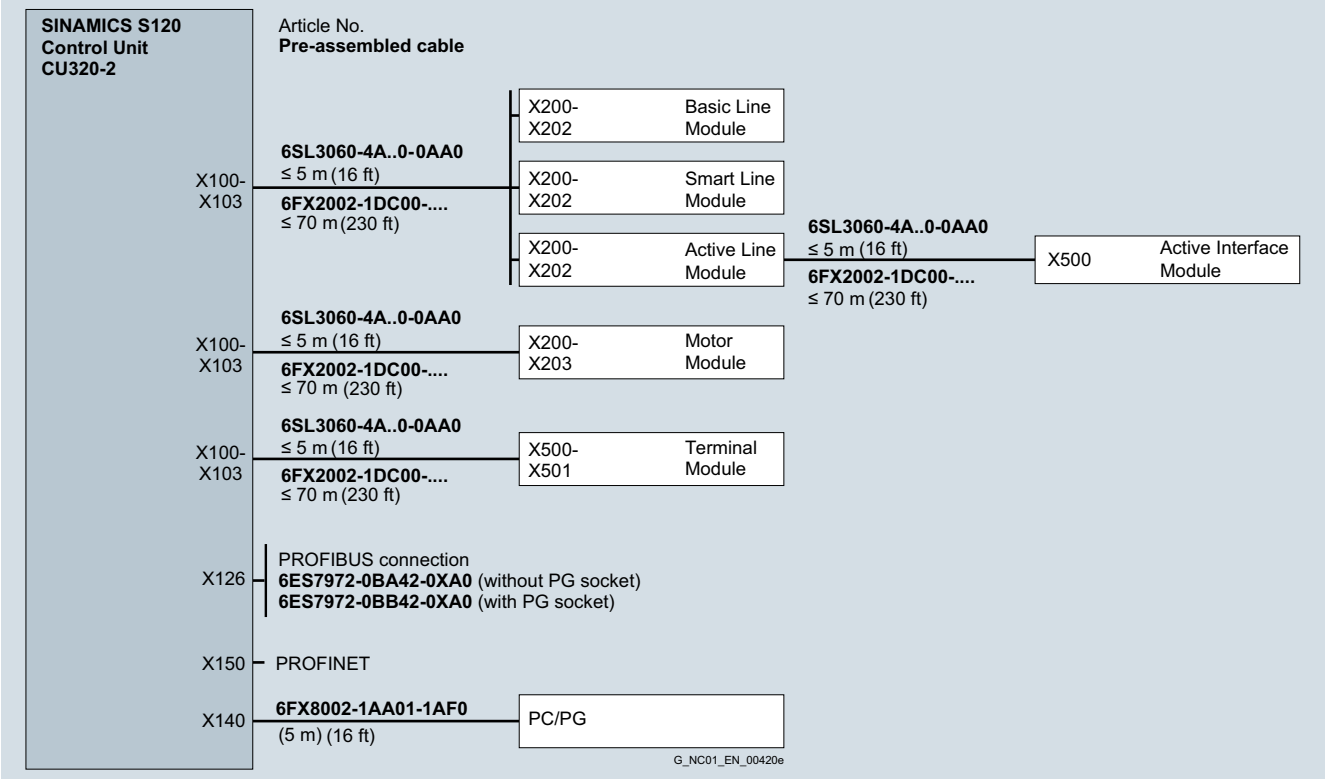

Connection overview of CU320-2 Control Unit with SINAMICS S120 in chassis format

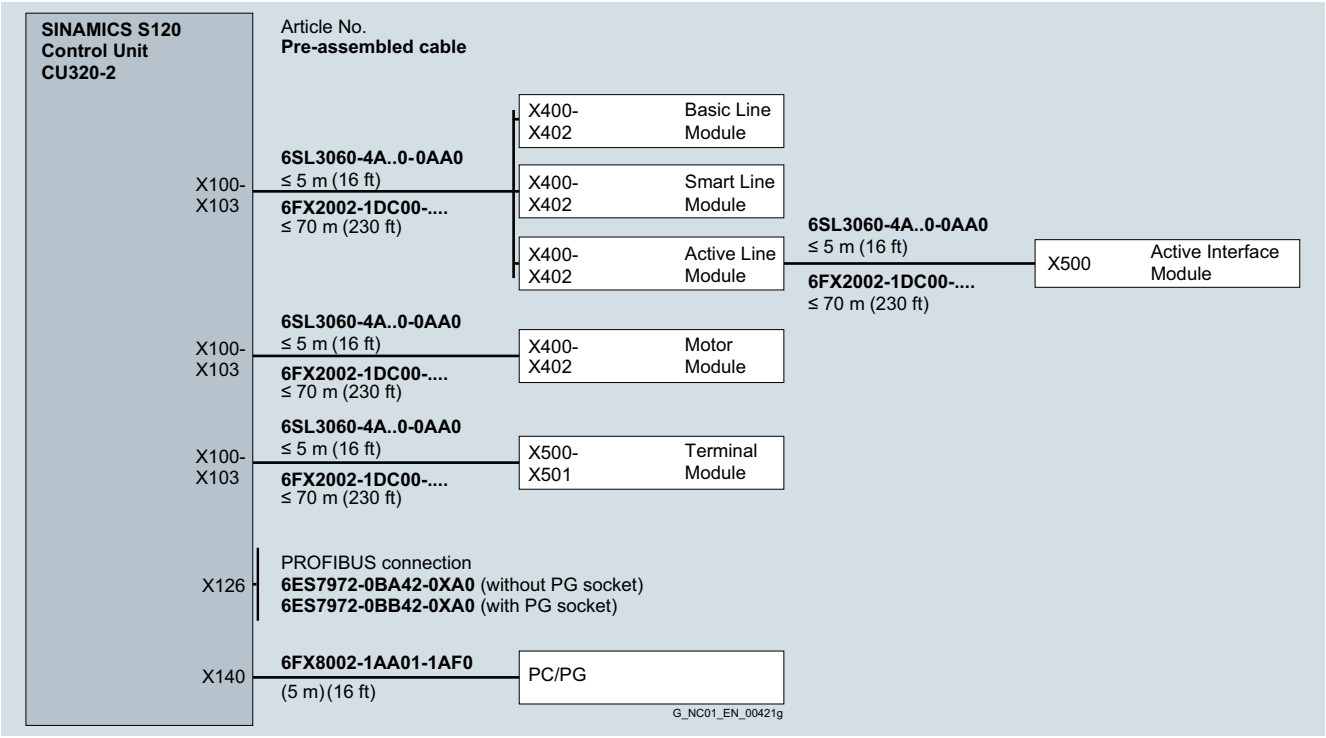

© Siemens AG 2017

Integration

Connection overview of SIMOTION D4x5-2 Control Unit with SINAMICS S120 in booksize format

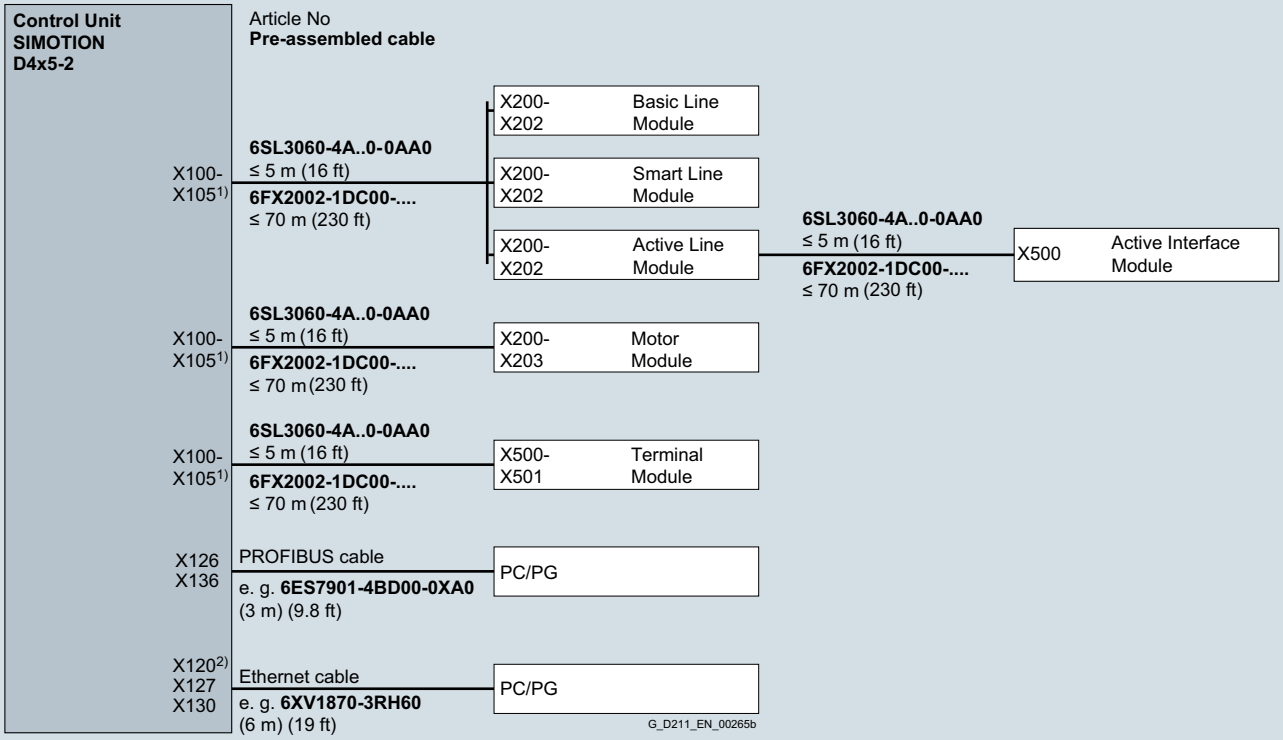

1) For SIMOTION D425/SIMOTION D435: X100-X103.
For SIMOTION D445-1: X100-X105.

2) X120 for D4x5-2 DP only.

Connection overview of SIMOTION D4x5-2 Control Unit with SINAMICS S120 in chassis format

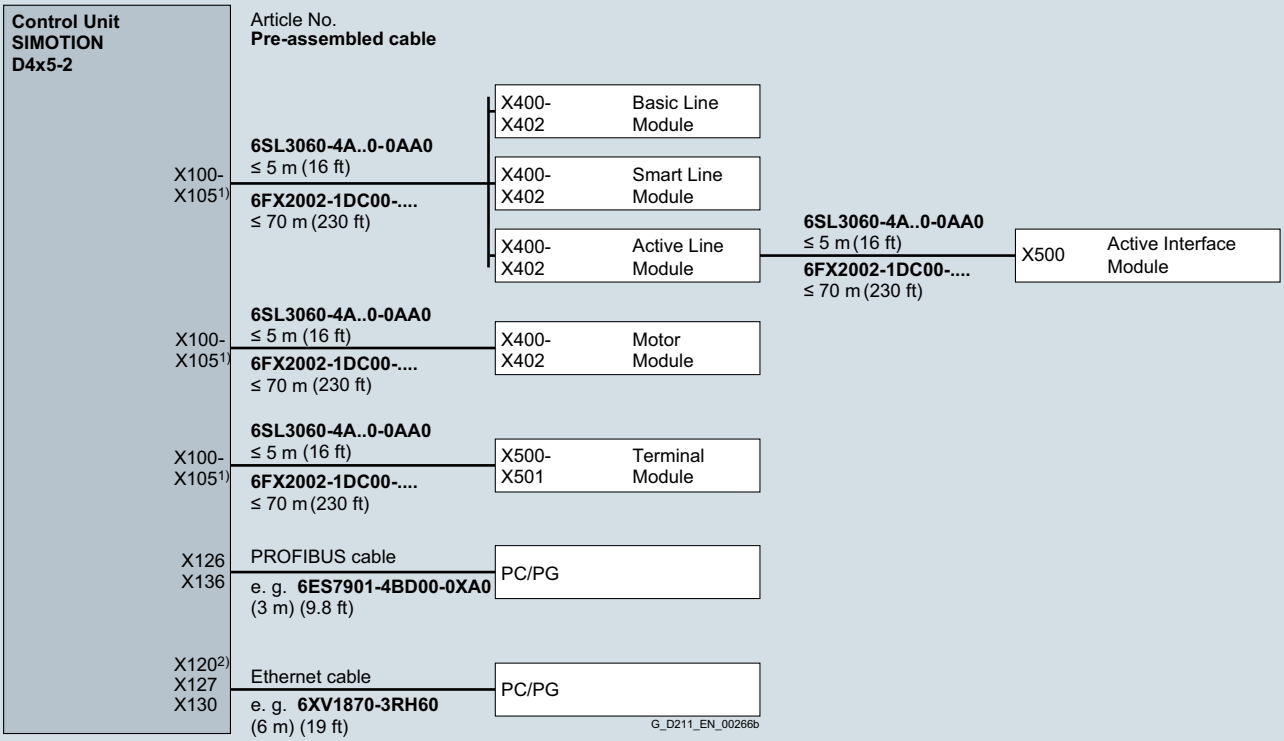

1) For SIMOTION D425-2: X100-X103.
For SIMOTION D435-2/D445-2/D455-2: X100-X105.

2) X120 for D4x5-2 DP only.

© Siemens AG 2017

Integration

Connection of a machine encoder (direct measuring system)

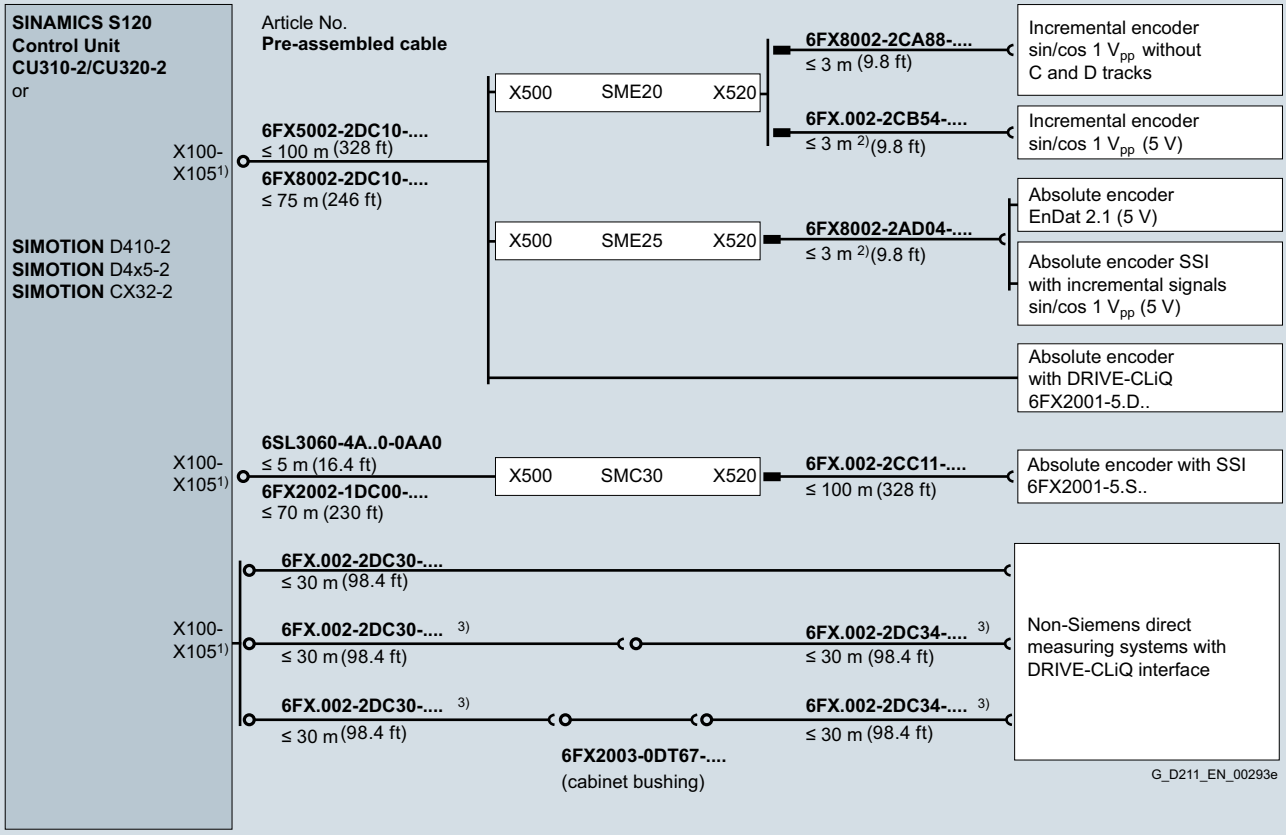

1) For Control Unit CU310-2/SIMOTION D410-2: X100
For Control Unit CU320-2/SIMOTION D425-2/SIMOTION CX32-2: X100-X103
For SIMOTION D435-2/D445-2/D455-2: X100-X105

2) Up to 10 m (32.8 ft) possible, dependent on encoder current consumption.

3) The total cable length (basic cable and extension cable) must not exceed 30 m (98.4 ft).

© Siemens AG 2017

Integration

Connection overview of SINAMICS S120 Motor Modules in booksize compact and booksize formats for SIMOTICS motors with/without DRIVE-CLiQ interface

The DRIVE-CLiQ signal cables of type 6SL3060-4A..0-0AA0 required for the standard configuration are part of the scope of supply of the Line Modules and Motor Modules. In this case, the modules must be mounted directly adjacent to one another in a row.

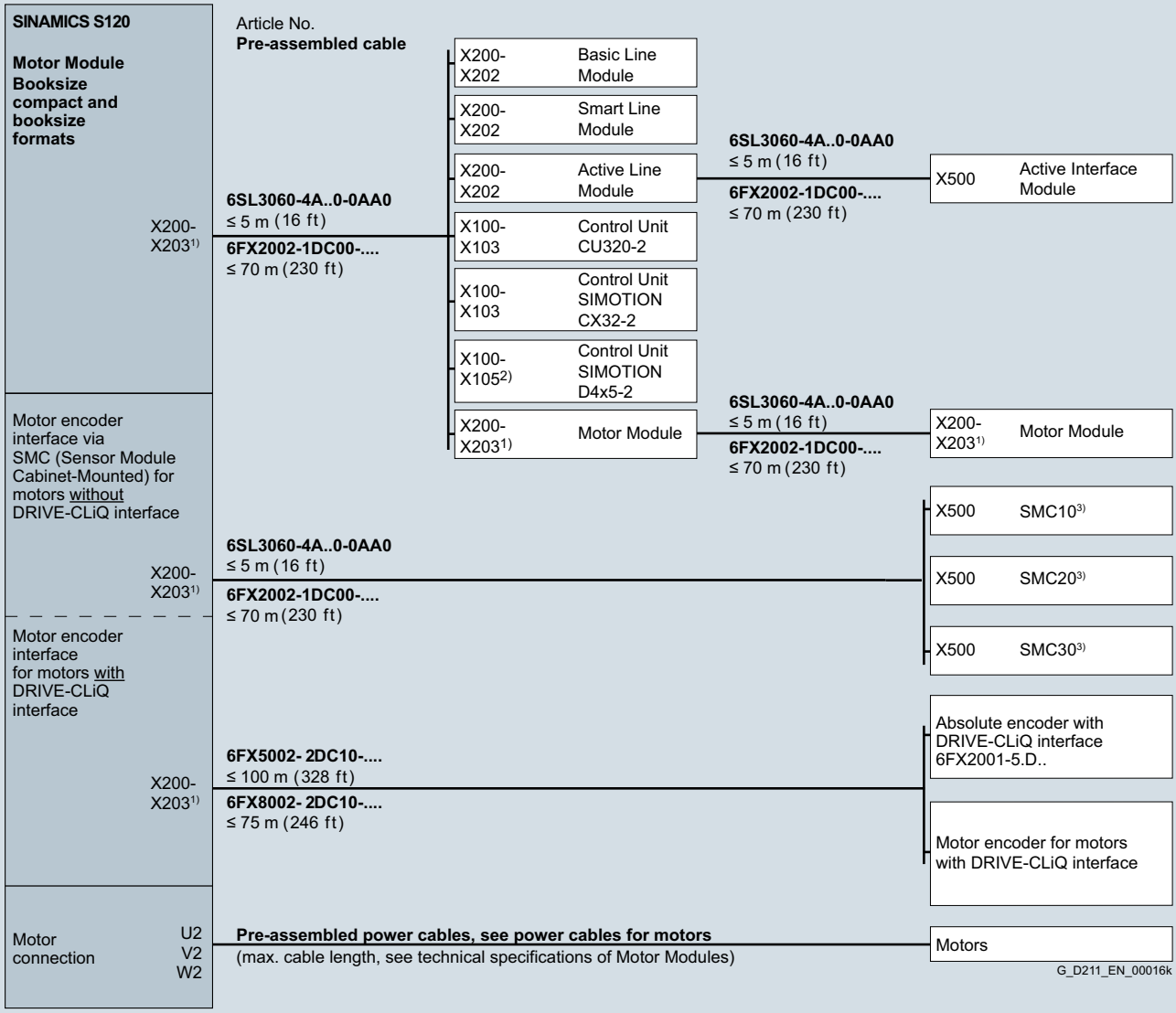

1) For Single Motor Module: X200-X202.
For Double Motor Module: X200-X203.
2) For SIMOTION D425-2: X100-X103.
For SIMOTION D435-2/D445-2/D455-2: X100-X105.
3) See connection overviews of SMC10/SMC20/SMC30.

© Siemens AG 2017

Integration (continued)

Connection overview of SINAMICS S120 Motor Modules in booksize format with SME120/SME125 or TM120 with/without SMC20 and SIMOTICS L-1FN3 linear motors

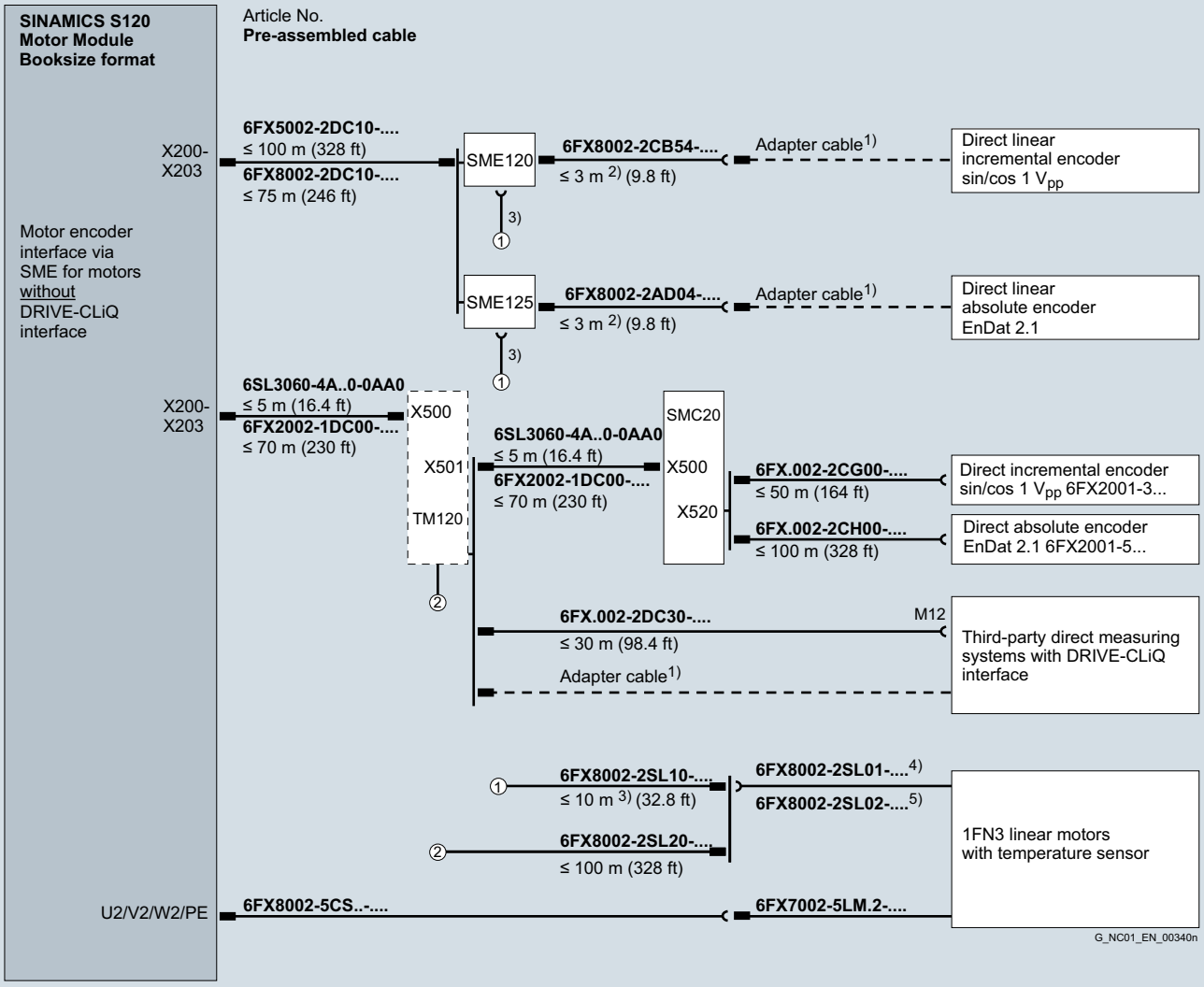

1) Adapter cable available from measuring system manufacturer.
2) Up to 10 m (32.8 ft) possible, depending on encoder current consumption.
3) The total cable length between SME120/SME125 and 1FN3 must not exceed 10 m (32.8 ft).
4) Adapter cable for 1FN3100/1FN3150 motors.
5) Adapter cable for 1FN3300 to 1FN3900 motors.

© Siemens AG 2017

Integration (continued)

Connection overview of SINAMICS S120 Motor Modules in booksize format with SME120/SME125 or TM120 with/without SMC20 and SIMOTICS T-1FW6 torque motors/SIMOTICS M-1FE1/-1FE2 built-in motors

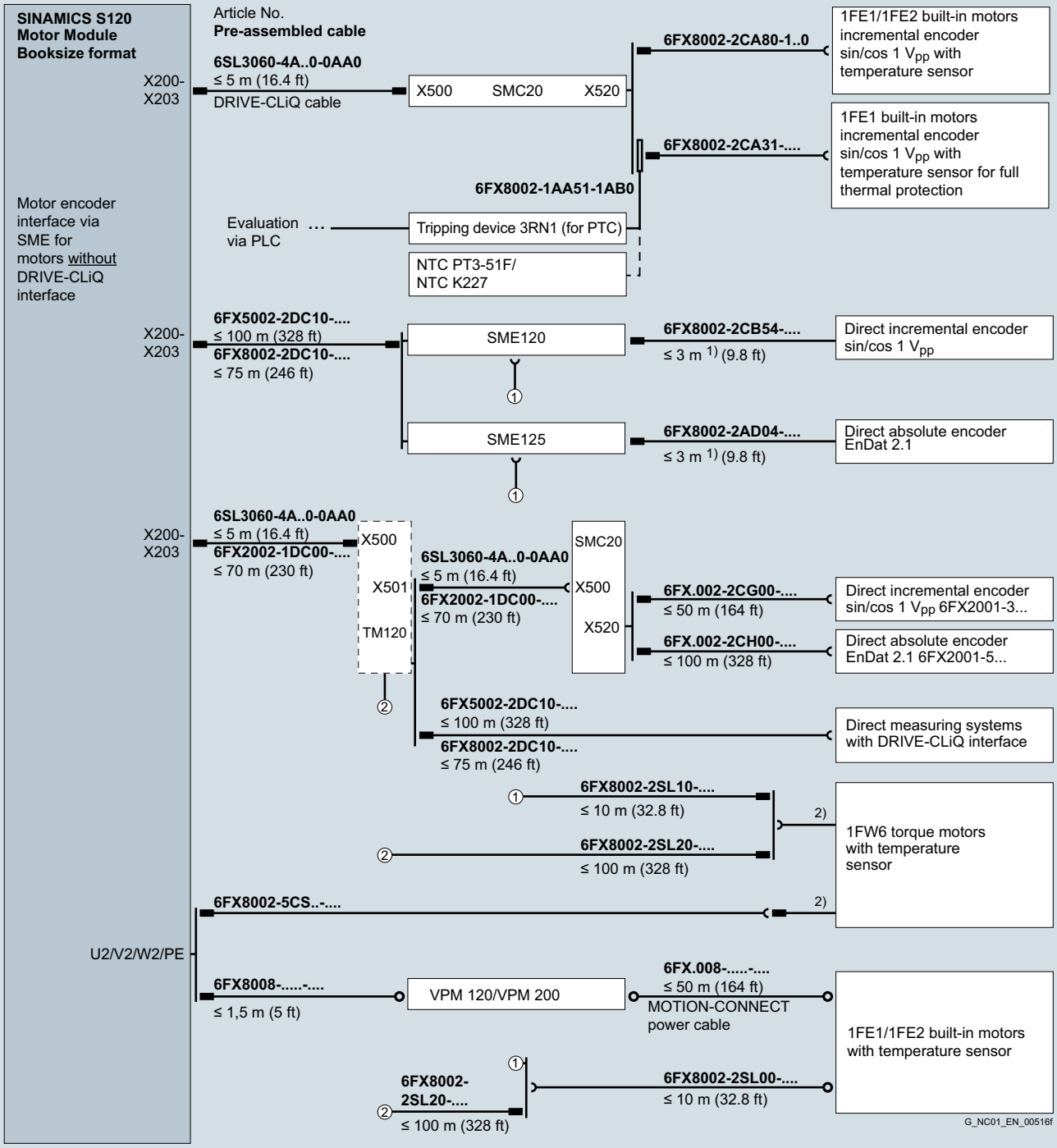

1) Up to 10 m (32.8 ft) possible, depending on encoder current consumption.

2) For type of connection with exposed core ends, power and signal connectors are not included in the scope of supply of the motor, they must be ordered separately (see Accessories for power and signal cables).

© Siemens AG 2017

Integration (continued)

Connection overview of SINAMICS S120 Motor Modules in booksize format and SIMOTICS 2SP1 main spindle motors

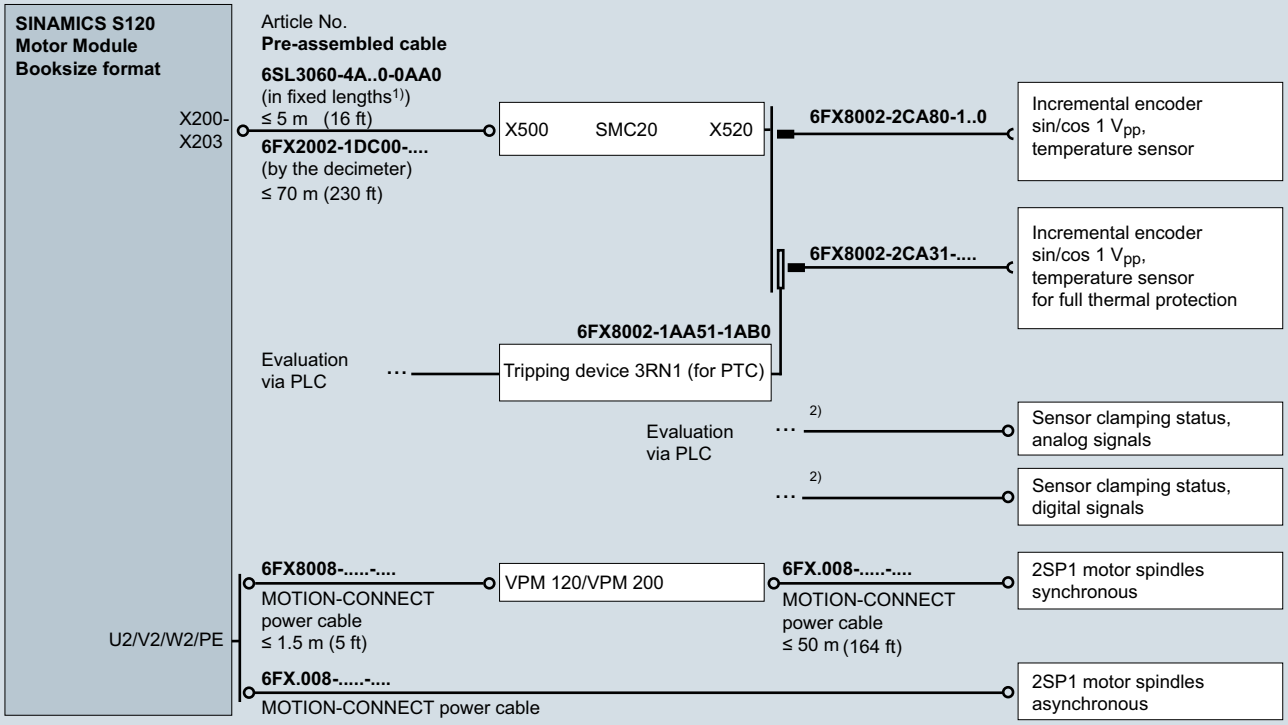

1) For standard configuration with the modules mounted directly adjacent to one another.
2) Adapter cable available from sensor manufacturer.

© Siemens AG 2017

Integration

Connection overview of SINAMICS S120 Motor Modules and Line Modules in chassis format for SIMOTICS motors with/without DRIVE-CLiQ interface

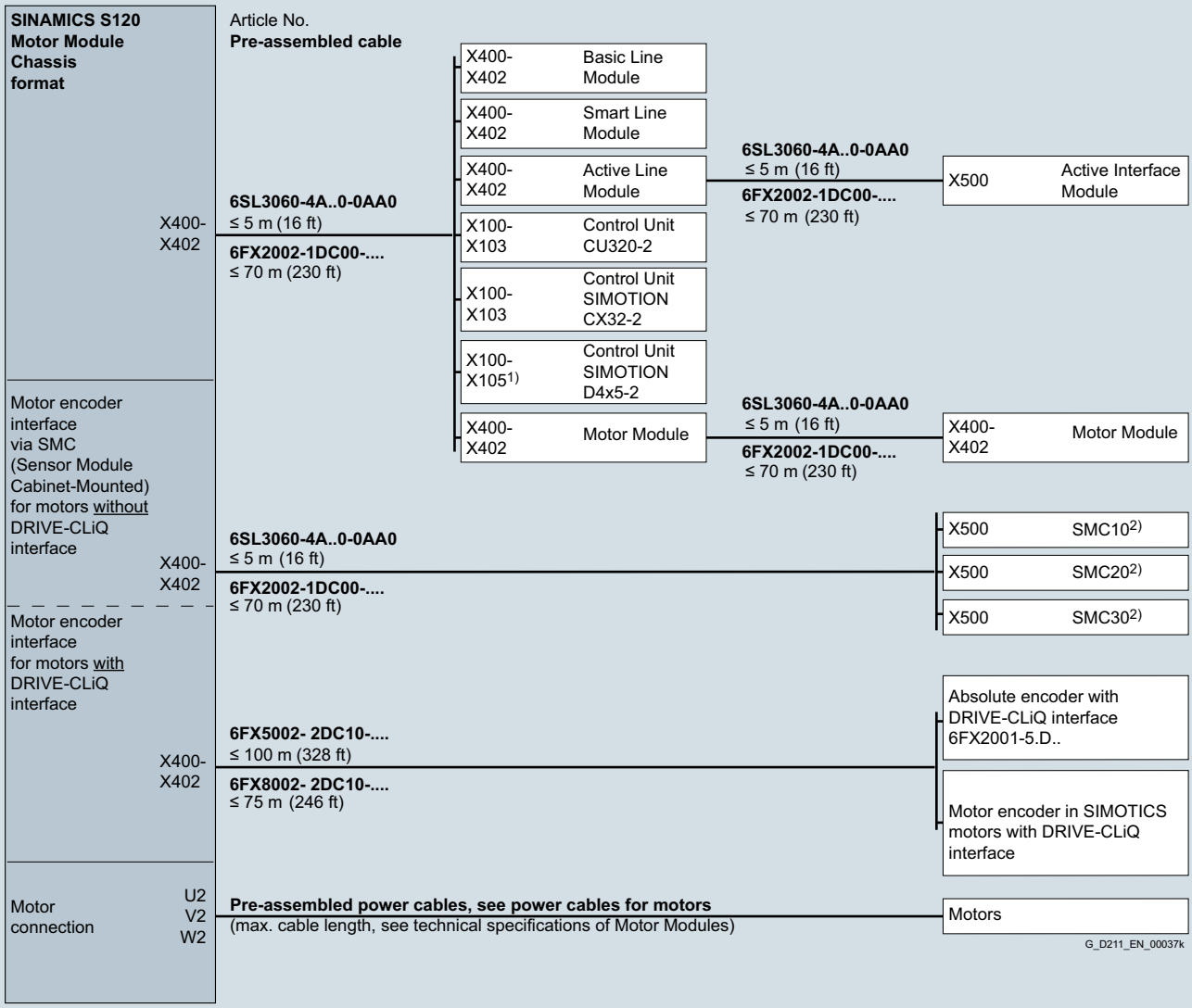

1) For SIMOTION D425-2: X100-X103
For SIMOTION D435-2/D445-2/D455-2: X100-X105
2) See connection overviews SMC10/SMC20/SMC30

© Siemens AG 2017

Integration

Connection overview of SINAMICS S120M distributed servo drive

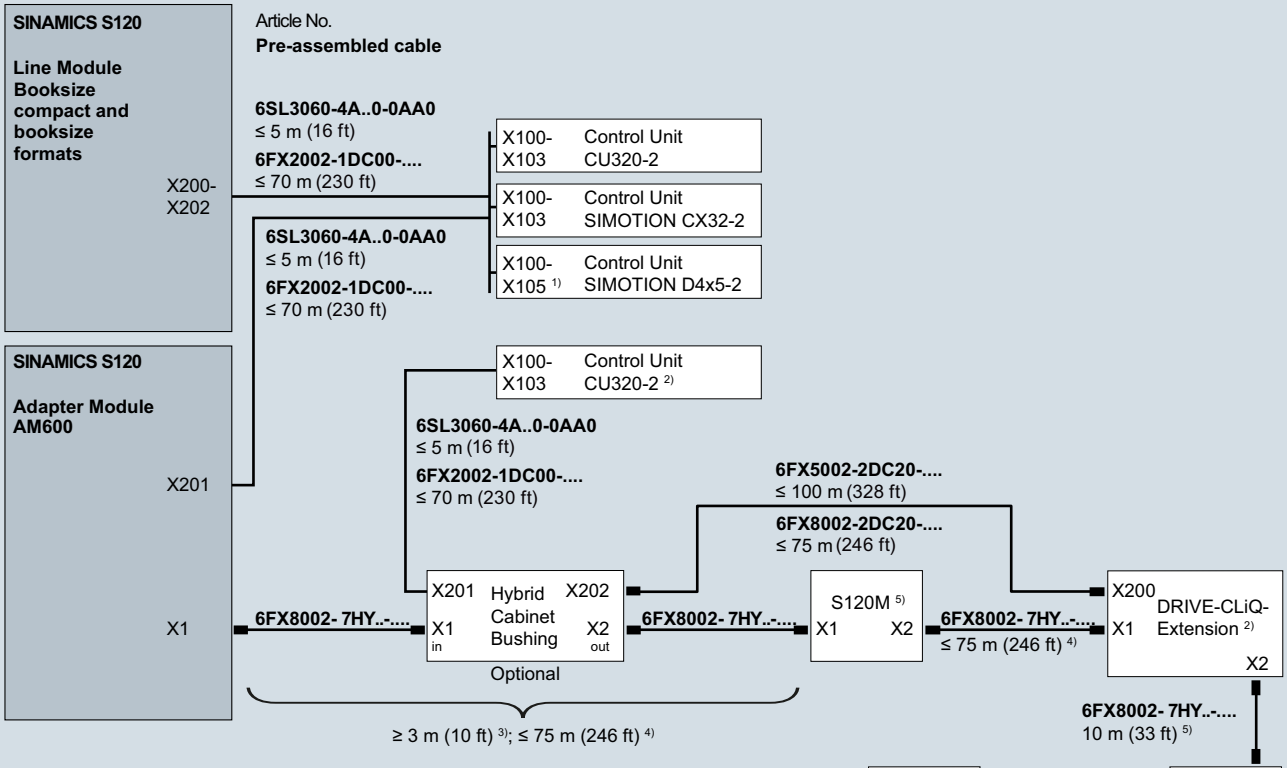

1) For SIMOTION D425-2: X100-X103
For SIMOTION D435-2/D445-2/D455-2: X100-X105
2) Required, if more than 6 SINAMICS S120M distributed servo drives are operated
3) ≥ 3 m (9.84 ft) between AM600 and the first distributed SINAMICS SM120 servo drive
4) The total length of the hybrid line must not exceed 100 m (328 ft) The overall length is reduced by 5 m (16 ft) for each DRIVE-CLiQ extension
5) A maximum of 6 SINAMICS S120M distributed servo drives per Control Unit is permissible
6) The maximum permissible number of SINAMICS S120M servo drives that can be connected to an AM600 Adapter Module depends on the power

© Siemens AG 2017

Integration

Connection overview of SINAMICS S120 Power Modules in blocksize format with CU310-2/SIMOTION D410-2 Control Unit for SIMOTICS motors with/without DRIVE-CLiQ interface

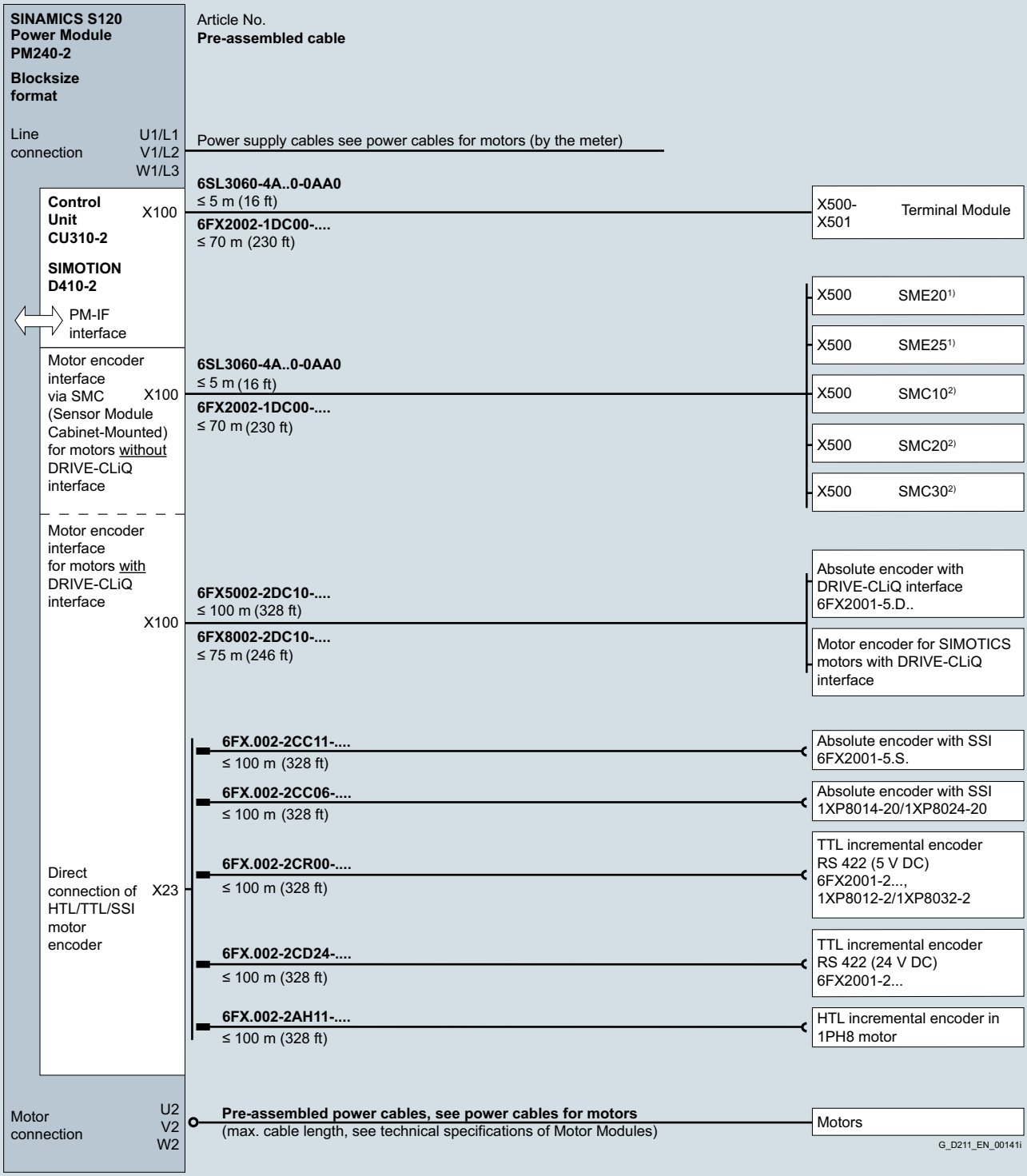

1) See connection overview for connection of a machine encoder.
2) See connection overviews of SMC10/SMC20/SMC30.

© Siemens AG 2017

Integration (continued)

Connection overview of SINAMICS S120 Power Modules in blocksize format with CUA31/CUA32 Control Unit Adapter for SIMOTICS motors with/without DRIVE-CLiQ interface

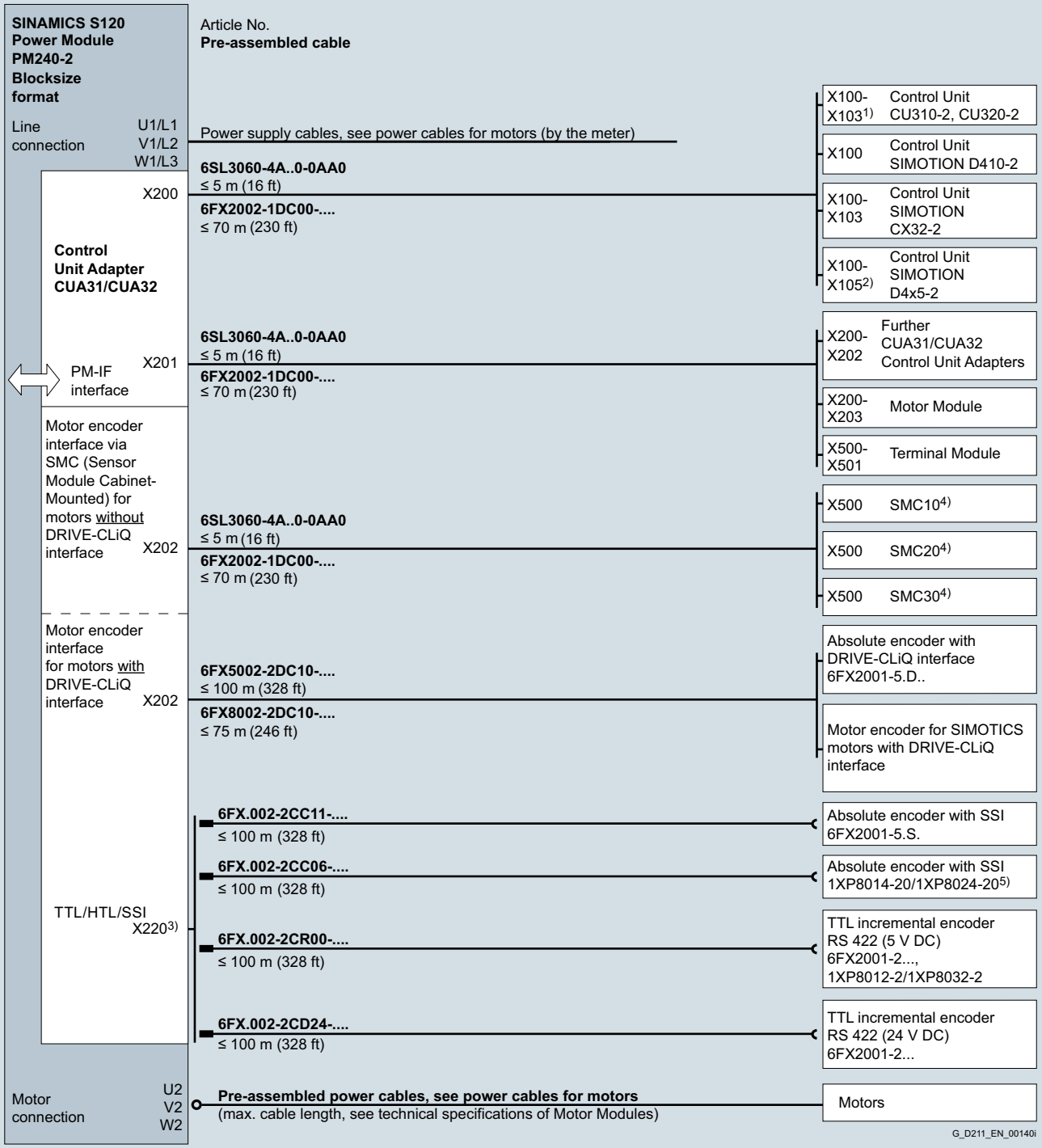

1) For Control Unit CU310-2: X100.
For Control Unit CU320-2: X100-X103.
2) For SIMOTION D425-2: X100-X103.
For SIMOTION D435-2/D445-2/D455-2: X100-X105.
3) Only for CUA32 Control Unit Adapter.
4) See connection overviews of SMC10/SMC20/SMC30.
5) Only for position control

© Siemens AG 2017

Integration

Connection overview of SINAMICS S120 Power Modules in chassis format for SIMOTICS motors with/without DRIVE-CLiQ interface

A DRIVE-CLiQ signal cable of type 6SL3060-4A..0-0AA0 for connection to the chassis-mounted CU310-2 Control Unit/ SIMOTION D410-2 Control Unit is already included in the scope of supply.

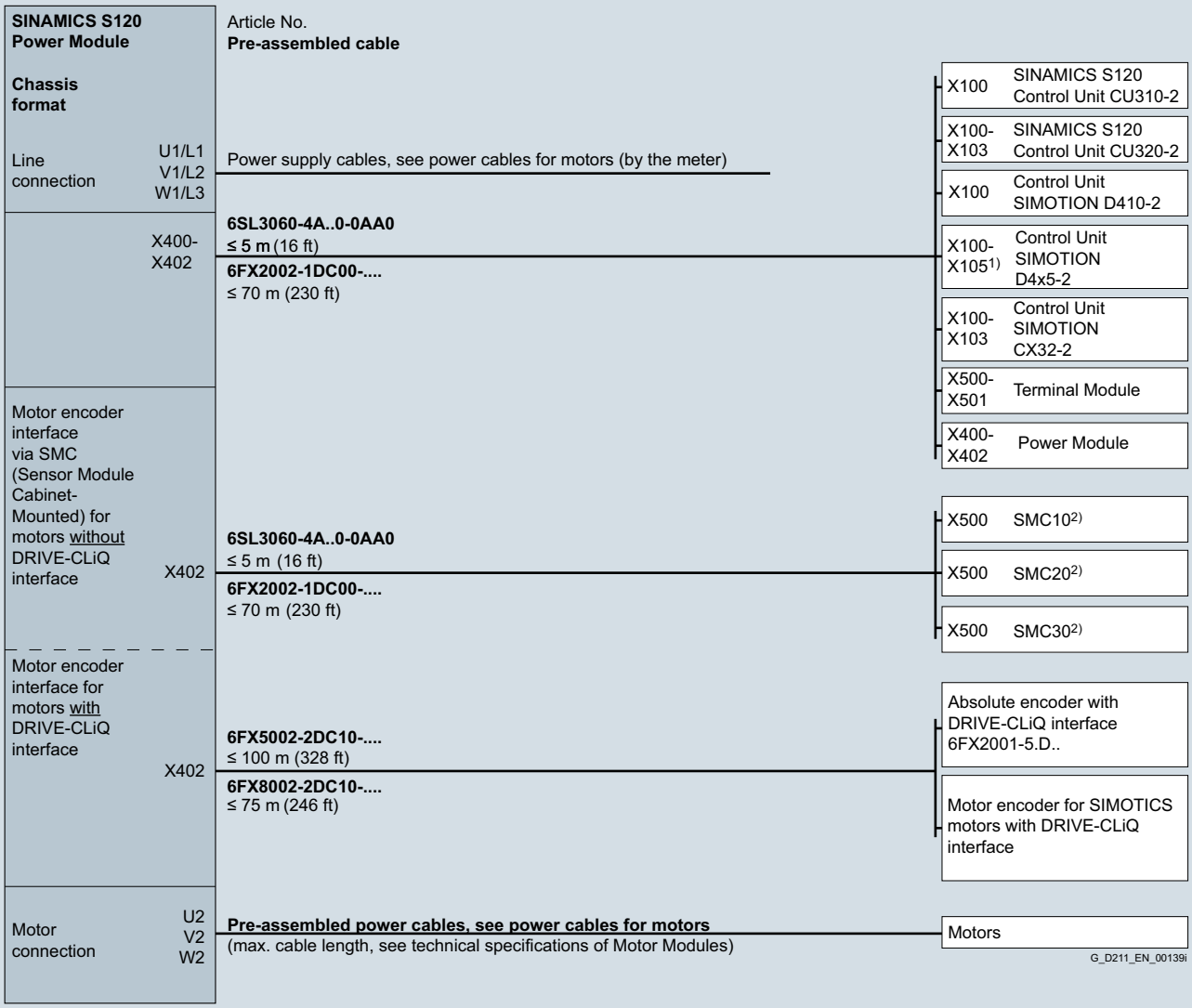

1) For SIMOTION D425-2: X100-X103
For SIMOTION D435-2/D445-2/D455-2: X100-X105
2) See connection overviews SMC10/SMC20/SMC30

© Siemens AG 2017

Integration

Connection overview of SINAMICS S120 Sensor Module Cabinet-Mounted SMC10

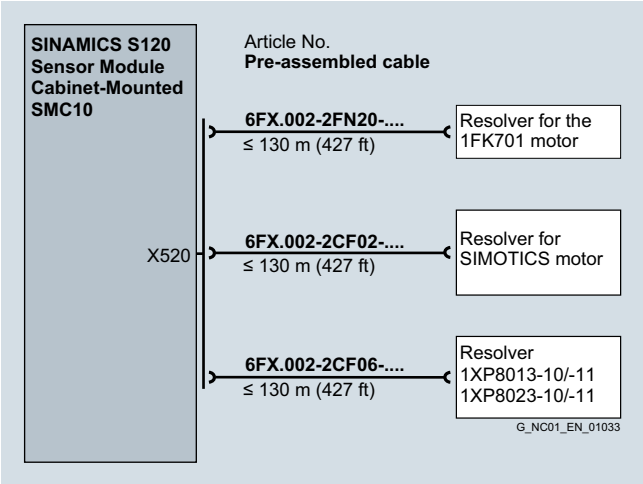

Connection overview of SINAMICS S120 Sensor Module Cabinet-Mounted SMC20

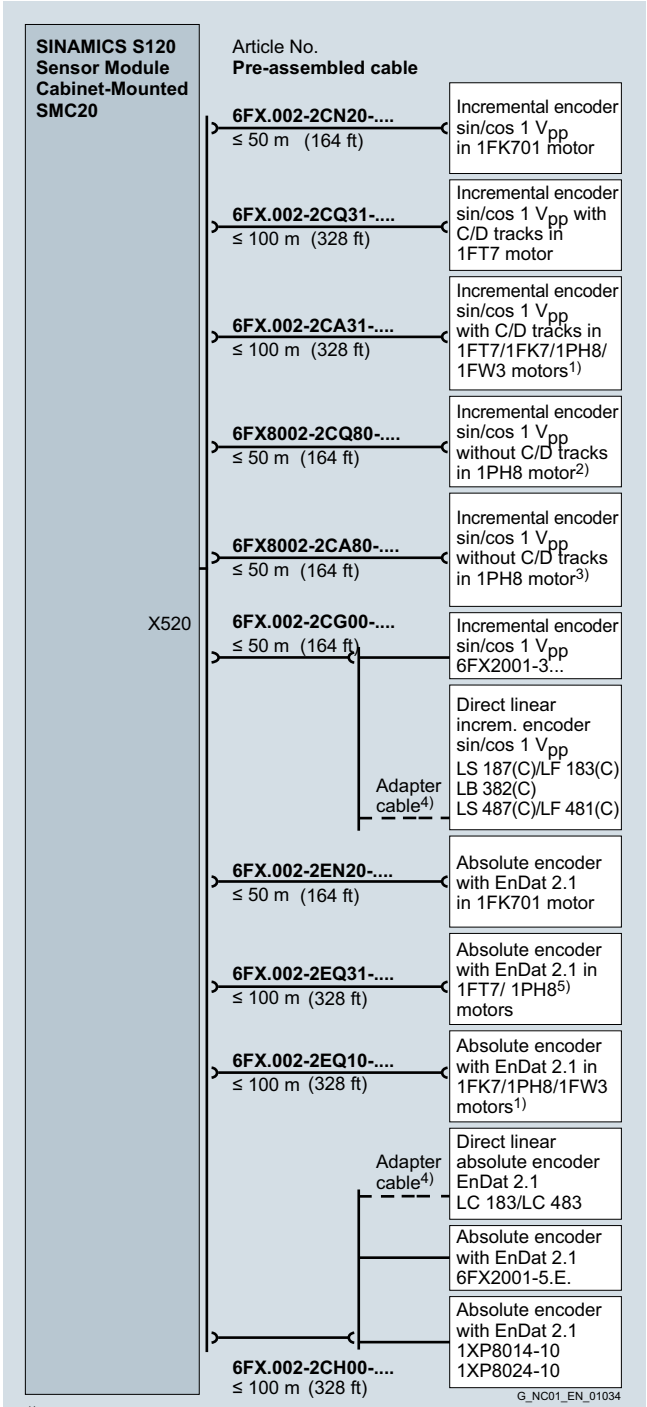

1) 1FW3 motor not suitable for machine tools.
2) Possible for 1PH808/1PH810/1PH813/1PH816 motors for encoders with 512 S/R and 256 S/R.
3) Possible for 1PH8 motors for encoders with 512 S/R and 256 S/R.
4) Adapter cable available from measuring system manufacturer.
5) Possible for 1PH808/1PH810/1PH813/1PH816 motors.

© Siemens AG 2017

Integration (continued)

Connection overview of SINAMICS S120 Sensor Module Cabinet-Mounted SMC30

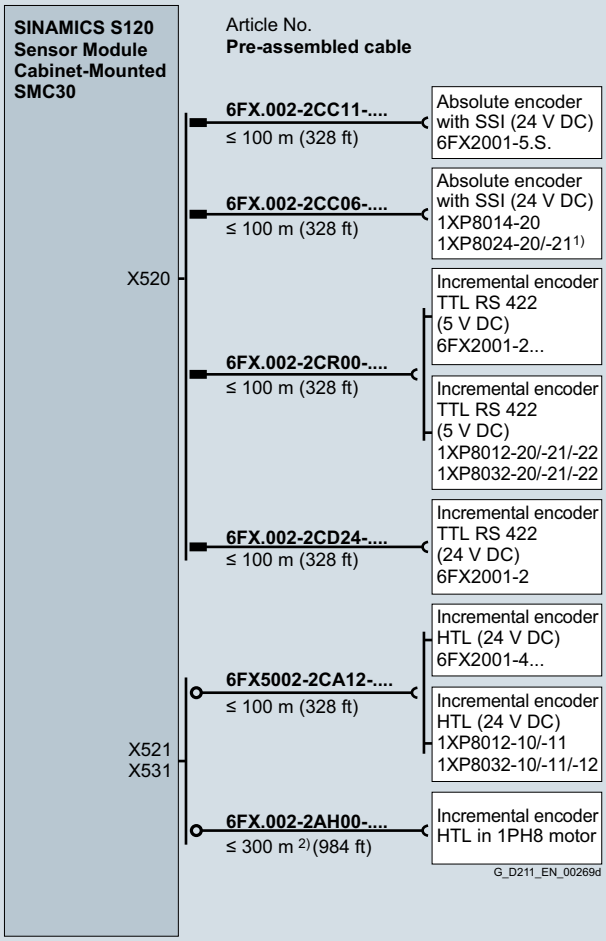

1) For position control only.

2) Applies to HTL encoders with bipolar signal evaluation or for evaluation of difference signals A*, A and B*, B; for HTL encoders with unipolar signal evaluation the permissible cable length is reduced to 100 m (328 ft).

© Siemens AG 2017

Integration

Connection overview of SINAMICS S120 for SIMOTICS S-1FT7/-1FK7 motors with RJ45 connection or option N16

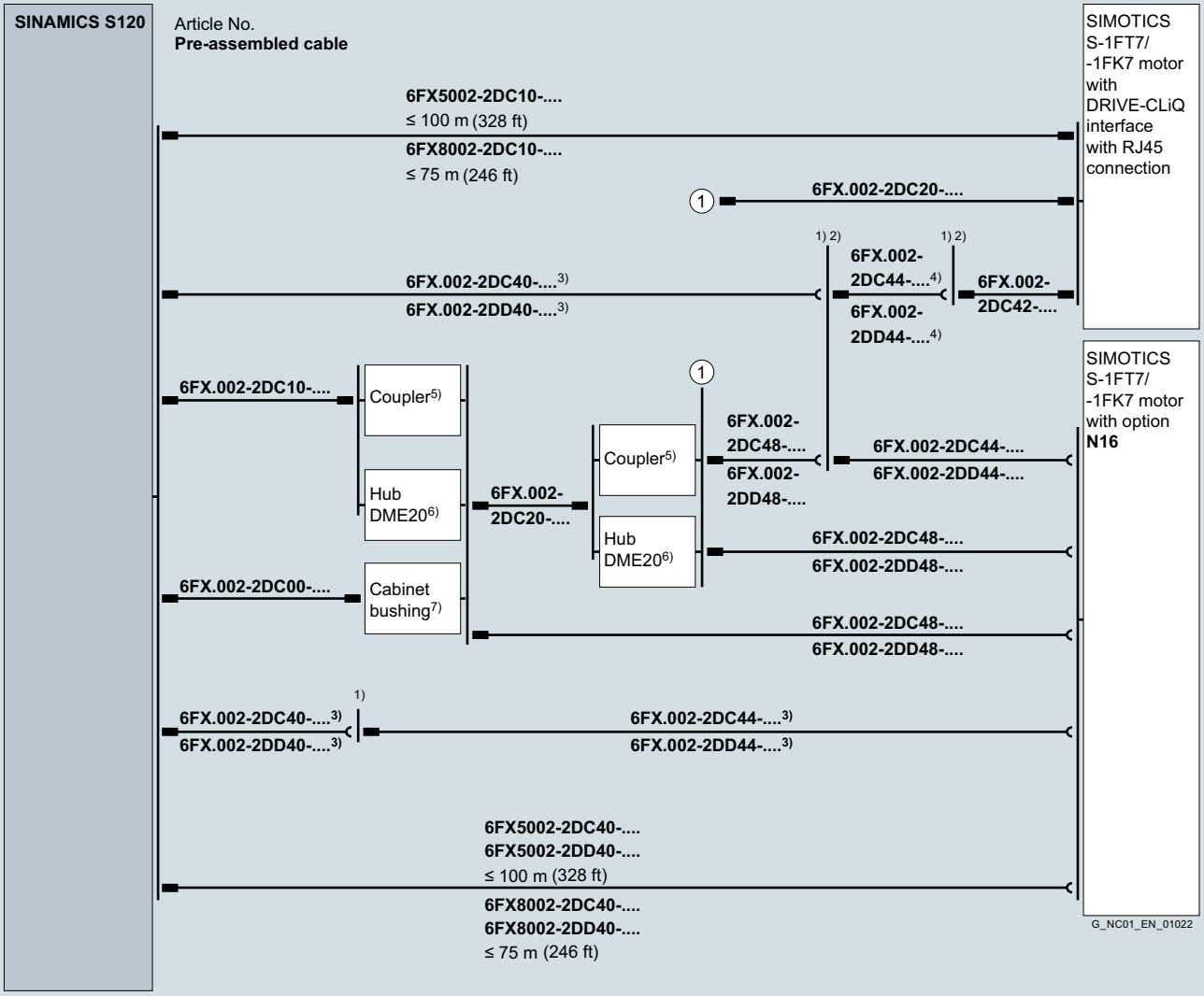

1) Max. 4 M17 disconnection points permissible without derating.
2) Optional mounting flange (6FX2003-7HX00).
3) Total permissible cable length ≤ 100 m (328 ft) (6FX5...) or ≤ 75 m (246 ft) (6FX8...).
4) Optional DRIVE-CLiQ cable 6FX.002-2DC44-.....
5) Optional DRIVE-CLiQ RJ45/IP67 coupler (6SL3066-2DA00-0AB0), max. 3 couplers permissible with derating (total permissible cable length ≤ 100 m (328 ft) (6FX5...) or ≤ 75 m (246 ft) (6FX8...) - 5 m (16.4 ft) per coupler).
6) Optional DME20 DRIVE-CLiQ Hub Module RJ45/IP67 (6SL3055-0AA00-6AB0), max. 2 DME20 Hub Modules possible.
7) Optional DRIVE-CLiQ RJ45/IP67, RJ45/IP20 cabinet bushing (6SL3066-2DA00-0AA0).

© Siemens AG 2017

Integration

Connection overview of SINAMICS S120 for external measuring systems with M12 connection or RJ45 connection

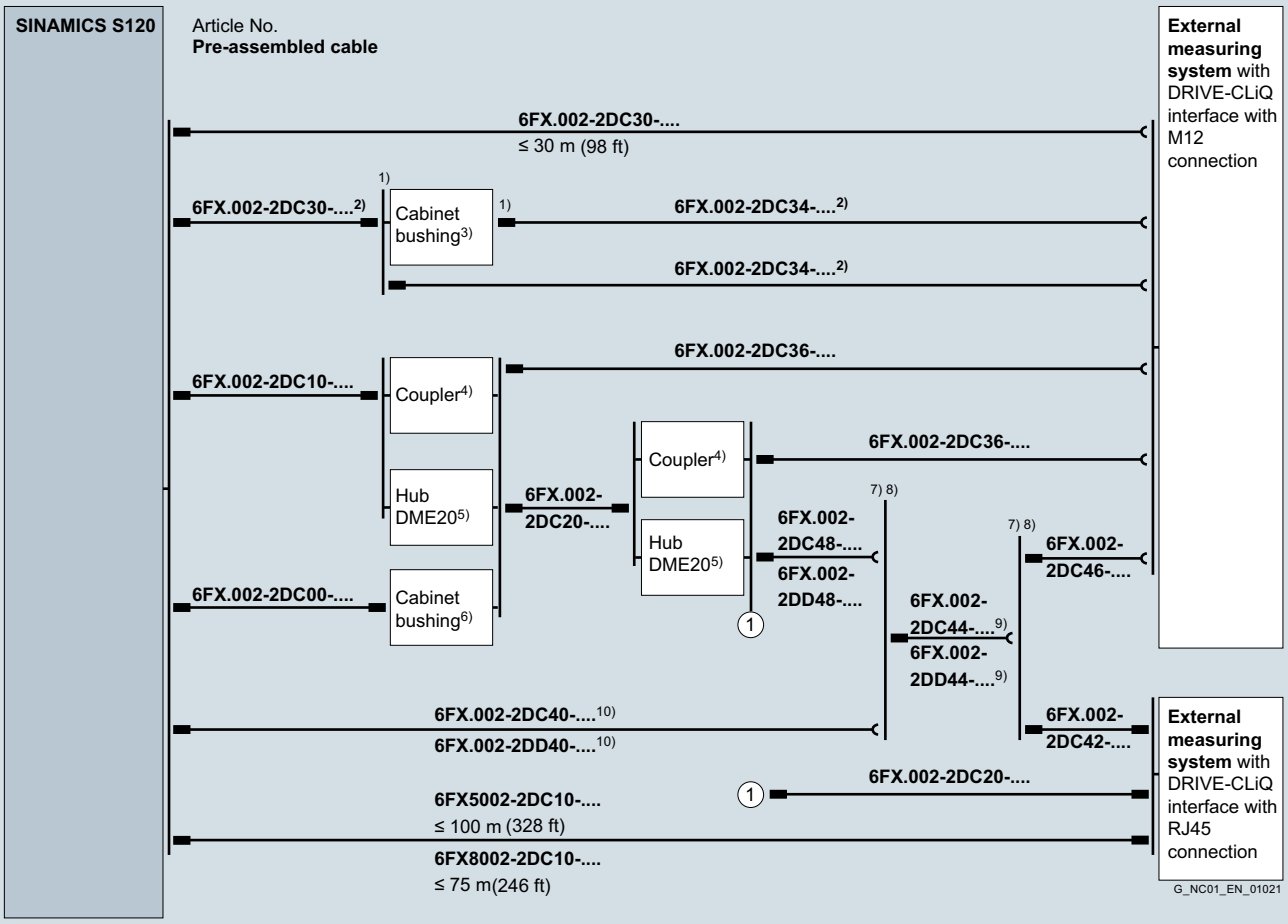

1) Max. 3 M12 disconnection points permissible without derating.
2) The total length of the DRIVE-CLiQ line must not exceed 30 m (98.4 ft).
3) Optional DRIVE-CLiQ M12/IP67 cabinet bushing (6FX2003-0DT67).
4) Optional DRIVE-CLiQ RJ45/IP67 coupler (6SL3066-2DA00-0AB0), max. 3 couplers permissible with derating (total permissible cable length ≤ 100 m (328 ft) (6FX5...) or ≤ 75 m (246 ft) (6FX8...) - 5 m (16.4 ft) per coupler).
5) Optional DME20 DRIVE-CLiQ Hub Module RJ45/IP67 (6SL3055-0AA00-6AB0), max. 2 DME20 Hub Modules possible.
6) Optional DRIVE-CLiQ RJ45/IP67, RJ45/IP20 cabinet bushing (6SL3066-2DA00-0AA0).
7) Max. 4 M17 disconnection points permissible without derating.
8) Optional mounting flange (6FX2003-7HX00).
9) Optional DRIVE-CLiQ cable 6FX.002-2DC44-.....
10) Total permissible cable length ≤ 100 m (328 ft) (6FX5...) or ≤ 75 m (246 ft) (6FX8...).

© Siemens AG 2017

Overview

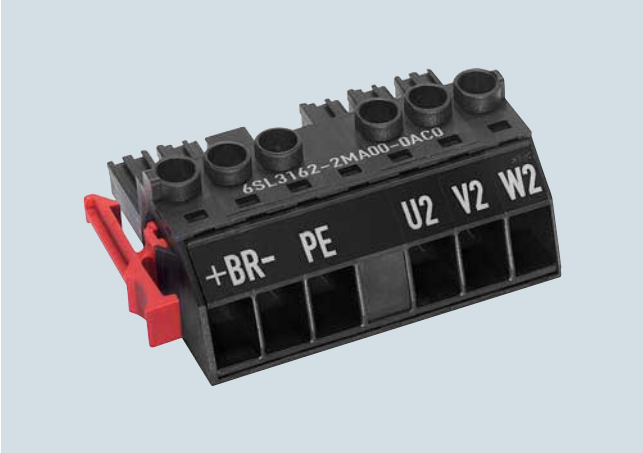

Power connector with screw terminal for Motor Modules, C/D type

Power connector with push-in connection with snap-in actuators for Motor Modules, C/D type

Power connectors can also be ordered separately, e.g. for applications where installation of the motor cable would be difficult if a power connector were attached.

Selection and ordering data

Description	Article No.
Power connector For 3 ... 30 A Motor Modules SINAMICS S120 booksize, C/D type with screw terminal	**6SL3162-2MA00-0AC0**
Power connector For 3 ... 30 A Motor Modules SINAMICS S120 booksize, C/D type Push-in connection with snap-in actuators	**6SL3162-2MB00-0AC0**

Overview

Power and signal connectors for SIMOTICS T-1FW6 built-in torque motors

Power and signal connectors 6FX2003 are designed to ensure optimum connection of SIMOTICS T-1FW6 built-in torque motors to the drive system.

Selection and ordering data

Description	Article No.
Power connector for SIMOTICS T-1FW6 built-in torque motors	
• Size 1 for 4 × 2.5 mm^2 Connector with pins and full external thread	**6FX2003-0LA00**
• Size 1.5 for 4 × 4 mm^2/4 × 6 mm^2/ 4 × 10 mm^2/4 × 16 mm^2 Connector with pins and full external thread	**6FX2003-0LA10**
Signal connector for SIMOTICS T-1FW6 built-in torque motors	
• M17 for 5 × 0.5 mm^2 + 1 × 1.0 mm^2 Connector with sockets and full-thread cap nut	**6FX2003-0SU07**

More information

A special tool is needed to crimp the contacts. For further information, go to:
www.intercontec.biz

© Siemens AG 2017

Mounting flange/HF (high-frequency) clamp

Overview

Mounting flange for power connectors

Mounting flanges are used to route or fix connectors in IP67 degree of protection, for example, in control cabinets. With the exception of angled connectors, a mounting flange can be retrofitted on connectors with a cap nut or with external thread.

Selection and ordering data

Description	Article No.
Mounting flange for	
• Power connector, size 0.5 and signal connector M17	**6FX2003-7HX00**
• Power connector, size 1	**6FX2003-7BX00**
• Power connector, size 1.5	**6FX2003-7CX00**
• Power connector, size 3	**6FX2003-7AX00**
• Signal connector M23	**6FX2003-7DX00**

Dimensional drawings

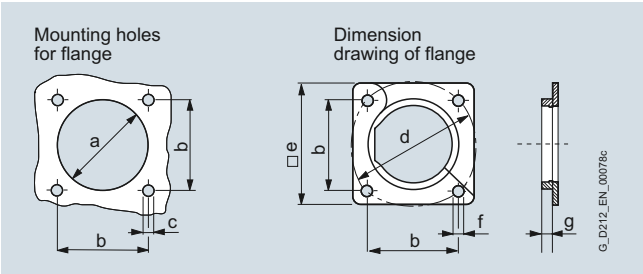

Dimensions	Power connector				Signal connector	
	Connector size 0.5	Connector size 1	Connector size 1.5	Connector size 3	M17	M23
	mm (in)	mm (in)	mm (in)	mm (in)	mm (in)	mm (in)
a	Ø 23 (0.91)	Ø 28.6 (1.13)	Ø 47 (1.85)	Ø 66 (2.6)	Ø 23 (0.91)	Ø 27.6 (1.09)
b	22.6 (0.89)	28.3 (1.11)	42.4 (1.67)	75 (246)	22.6 (0.89)	28.3 (1.11)
c	4 × M2.5	4 × M3	4 × M4	4 × M4	4 × M2.5	4 × M3
d	Ø 32 (1.26)	Ø 40 (1.57)	Ø 60 (2.36)	Ø 63 (2.48)	Ø 32 (1.26)	Ø 40 (1.57)
e	32 (1.26)	35 (1.38)	55 (2.17)	84.9 (3.34)	32 (1.26)	35 (1.38)
f	M3	M4	M5	M6	M3	M4
g	6.5 (0.26)	6.5 (0.26)	7 (0.28)	10 (0.39)	6.5 (0.26)	6.5 (0.26)

Overview

HF (high-frequency) clamp for power connectors

To ensure correct grounding at the cable duct or cabinet wall, a ground clamp is optionally available together with the flanges for large-area discharging of high-frequency interferences. An HF (high-frequency) clamp is not required for size 3 power connectors.

Selection and ordering data

Description	Article No.
HF (high-frequency) clamp for	
• Power connector, size 0.5 and signal connector M17	**6FX2003-7FA00**
• Power connector, size 1 and signal connector M23	**6FX2003-7FX00**
• Power connector, size 1.5	**6FX2003-7GX00**

© Siemens AG 2017

Overview

DRIVE-CLiQ cabinet bushing for signal cables (RJ45)

The DRIVE-CLiQ cabinet bushing (RJ45) provides the high IP67 degree of protection for the appropriate MOTION-CONNECT DRIVE-CLiQ signal cables routed through openings in control cabinets. The DRIVE-CLiQ cabinet bushing offers IP54 degree of protection on the outside and IP20 on the inside of the control cabinet.

Selection and ordering data

Description	Article No.
DRIVE-CLiQ cabinet bushing For DRIVE-CLiQ signal cables MOTION-CONNECT (RJ45)	**6SL3066-2DA00-0AA0**

Dimensional drawings

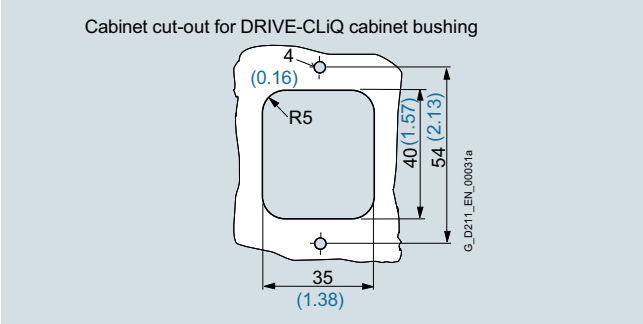

Dimensions in mm (in)

Overview

DRIVE-CLiQ cabinet bushing for signal cables (M12)

The DRIVE-CLiQ cabinet bushing (M12) provides the high IP67 degree of protection for the appropriate MOTION-CONNECT DRIVE-CLiQ signal cables routed through openings in control cabinets. The DRIVE-CLiQ cabinet bushing (M12) has IP67 degree of protection at both ends and is designed as a socket with internal thread on the outside of the cabinet and as pins with an external thread on the inside of the cabinet.

Note:

The IP67 degree of protection is only achieved with the DRIVE-CLiQ signal cables connected.

Selection and ordering data

Description	Article No.
DRIVE-CLiQ cabinet bushing For DRIVE-CLiQ signal cables MOTION-CONNECT (M12)	**6FX2003-0DT67**

Dimensional drawings

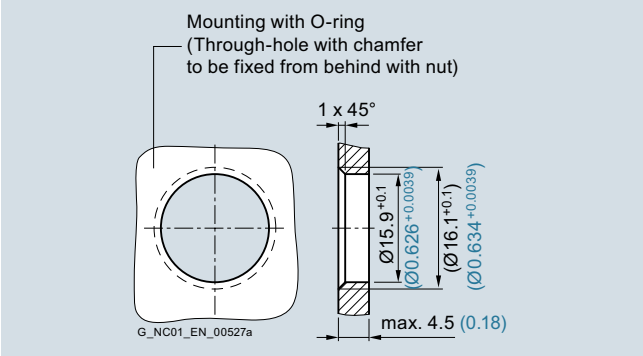

Dimensions in mm (in)

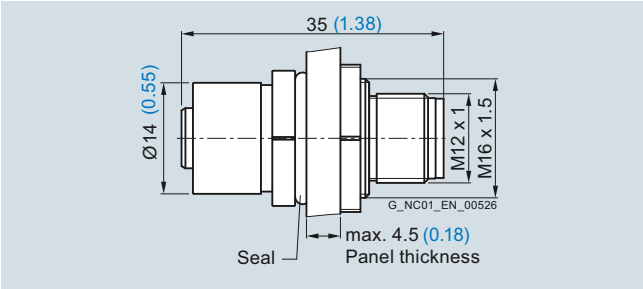

Cutout in cabinet for DRIVE-CLiQ cabinet bushing

© Siemens AG 2017

Overview

DRIVE-CLiQ coupler for signal cables

The DRIVE-CLiQ coupler makes it possible to join two MOTION-CONNECT DRIVE-CLiQ signal cables with IP67 degree of protection.

Selection and ordering data

Description	Article No.
DRIVE-CLiQ coupler For MOTION-CONNECT DRIVE-CLiQ signal cables	**6SL3066-2DA00-0AB0**

© Siemens AG 2017

Security information

Siemens provides products and solutions with industrial security functions that support the secure operation of plants, systems, machines and networks.

In order to protect plants, systems, machines and networks against cyber threats, it is necessary to implement – and continuously maintain – a holistic, state-of-the-art industrial security concept. Siemens' products and solutions only form one element of such a concept.

Customer is responsible to prevent unauthorized access to its plants, systems, machines and networks. Systems, machines and components should only be connected to the enterprise network or the internet if and to the extent necessary and with appropriate security measures (e.g. use of firewalls and network segmentation) in place.

Additionally, Siemens' guidance on appropriate security measures should be taken into account. For more information about industrial security, please visit www.siemens.com/industrialsecurity

Siemens' products and solutions undergo continuous development to make them more secure. Siemens strongly recommends to apply product updates as soon as available and to always use the latest product versions. Use of product versions that are no longer supported, and failure to apply latest updates may increase customer's exposure to cyber threats.

To stay informed about product updates, subscribe to the Siemens Industrial Security RSS Feed under www.siemens.com/industrialsecurity

13/2 Engineering tools
13/2 Drive Technology Configurator
13/3 SIZER for Siemens Drives engineering tool
13/4 CAD CREATOR
13/5 STARTER commissioning tool
13/7 SINAMICS Drive Control Chart (SINAMICS DCC)
13/8 Commissioning SINAMICS S120 in the TIA Portal
13/9 SINAMICS Web server
13/10 Drive ES engineering software

13/12 Configuration notes
13/12 Planning
13/13 EMC notes for the application of the product standard EN 61800-3
13/17 SINAMICS S120 Control Units
13/28 Motors
13/29 Power units
13/38 System components
13/42 Mechanical configuration of the drive system
13/45 Heat dissipation

© Siemens AG 2017

Overview

The Drive Technology Configurator (DT Configurator) helps you to configure the optimum drive technology products for your application – starting with gear units, motors, inverters as well as the associated options and components and ending with controllers, software licenses and connection systems. Whether with little or detailed knowledge of products: You can easily, quickly and efficiently configure your particular drive using product group preselectors, targeted navigation through selection menus or by entering article numbers directly to select the products.

In addition, comprehensive documentation comprising technical data sheets, 2D dimensional drawings/3D CAD models, operating instructions, certificates, etc. can be selected in the DT Configurator. The products that you select can be directly ordered by transferring a parts list to the shopping cart of the Industry Mall.

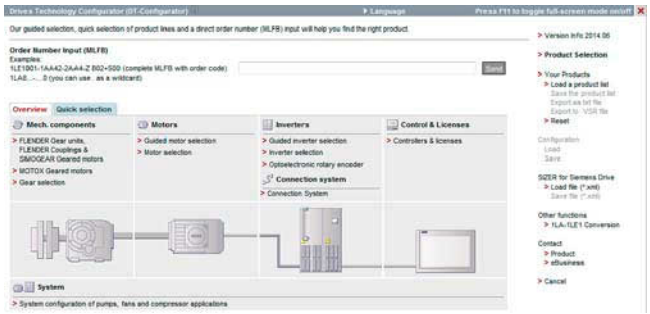

Drive Technology Configurator for efficient drive configuration with the following functions

- Quick, efficient configuration of drive products and associated components – gear units, motors, inverters, controllers, connection systems
- Configuration of drive systems for pumps, fans and compressor applications from 1 kW to 2.6 MW
- Retrievable documentation for configured products and components, such as
  - Data sheets in up to 9 languages in PDF or RTF format
  - 2D dimensional drawings/3D CAD models in various formats
  - Terminal box drawing and terminal connection diagram
  - Operating instructions
  - Certificates
  - Start-up calculation for SIMOTICS motors
  - EPLAN macros
- Support with retrofitting in conjunction with Spares On Web (www.siemens.com/sow)
- Ability to order products directly through the Siemens Industry Mall

Access to the Drive Technology Configurator

The Drive Technology Configurator can be called up without registration and without a login:
www.siemens.com/dt-configurator

Selection and ordering data

Description	Article No.
Interactive Catalog CA 01 on DVD-ROM including Drive Technology Configurator English	**E86060-D4001-A510-D7-7600**

More information

Online access to the Drive Technology Configurator

More information about the Drive Technology Configurator is available on the Internet at
www.siemens.com/dtconfigurator

Offline access to the Drive Technology Configurator in the Interactive Catalog CA 01

In addition, the Drive Technology Configurator is also included in the Interactive Catalog CA 01 on DVD-ROM - the offline version of the Siemens Industry Mall.
The Interactive Catalog CA 01 can be ordered from the relevant Siemens sales office or via the Internet:
www.siemens.com/automation/CA01

© Siemens AG 2017

Overview

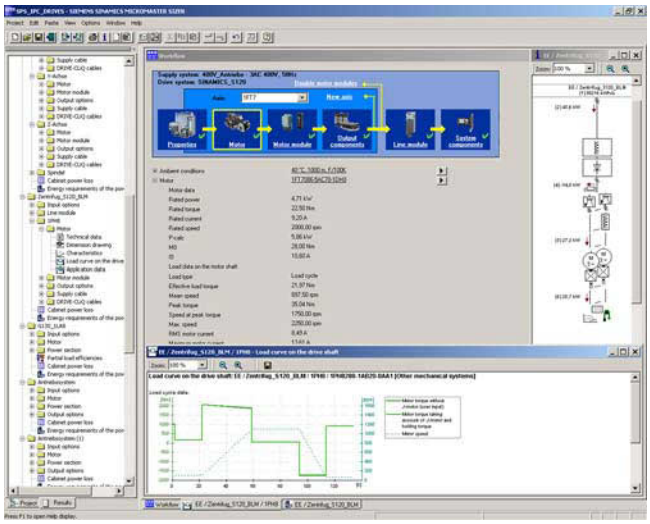

The following drives and controls can be engineered in a user-friendly way using the SIZER for Siemens Drives engineering tool:

- SIMOTICS low-voltage motors, including servo geared motors
- SINAMICS low-voltage drive systems
- Motor starters
- SINUMERIK CNC
- SIMOTION Motion Control controller
- SIMATIC controller

It provides support when selecting the technologies involved in the hardware and firmware components required for a drive task. SIZER for Siemens Drives supports the complete configuration of the drive system, from basic single drives to demanding multi-axis applications.

SIZER for Siemens Drives supports all of the configuring steps in one workflow:

- Configuring the power supply
- Designing the motor and gearbox, including calculation of mechanical transmission elements
- Configuring the drive components
- Compiling the required accessories
- Selecting the line-side and motor-side power options, e.g. cables, filters, and reactors

When SIZER for Siemens Drives was being designed, particular importance was placed on a high degree of usability and a universal, function-based approach to the drive application. The extensive user guidance makes using the tool easy. Status information keeps you continually informed about the progress of the configuration process.

The SIZER for Siemens Drives user interface is available in English, French, German and Italian.

The drive configuration is saved in a project. In the project, the components and functions used are displayed in a hierarchical tree structure.

The project view permits the configuration of drive systems and the copying/inserting/modifying of drives already configured.

The configuration process produces the following results:

- A parts list of the required components (export to Excel, use of the Excel data sheet for import to SAP)
- Technical specifications of the system
- Characteristic curves
- Comments on system reactions
- Mounting arrangement of drive and control components and dimensional drawings of motors
- Energy requirements of the configured application

These results are displayed in a results tree and can be reused for documentation purposes.

Technological online help is available:

- Detailed technical specifications
- Information about the drive systems and their components
- Decision-making criteria for the selection of components
- Online help in English, French, German, Italian, Chinese and Japanese

System requirements

- PG or PC with Pentium III min. 800 MHz (recommended > 1 GHz)
- 512 MB RAM (1 GB RAM recommended)
- At least 4.1 GB of free hard disk space
- An additional 100 MB of free hard disk space on Windows system drive
- Screen resolution 1024 × 768 pixels (1280 × 1024 pixels recommended)
- Operating system:
  - Windows 7 Professional (32/64 bit)
  - Windows 7 Enterprise (32/64 bit)
  - Windows 7 Ultimate (32/64 bit)
  - Windows 7 Home (32/64 bit)
  - Windows 8.1 Professional (32/64 bit)
  - Windows 8.1 Enterprise (32/64 bit)
- Microsoft Internet Explorer V5.5 SP2

Selection and ordering data

Description	Article No.
SIZER for Siemens Drives engineering tool on DVD-ROM English, French, German, Italian	**6SL3070-0AA00-0AG0**

More information

The SIZER for Siemens Drives engineering tool is available free on the Internet at
www.siemens.com/sizer

© Siemens AG 2017

Overview

CAD CREATOR –
Dimensional drawing and 2D/3D CAD generator

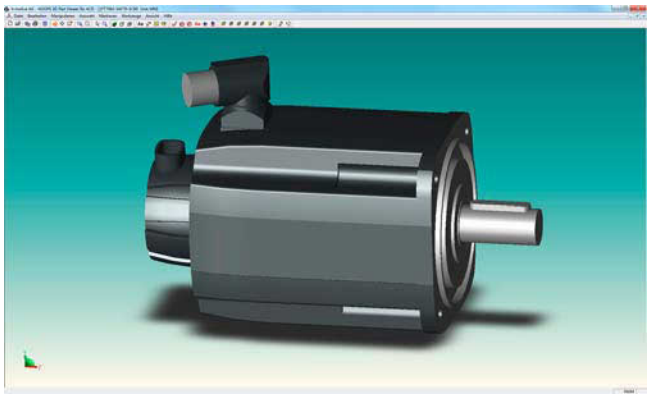

Thanks to the user-friendly operator interface of the CAD CREATOR, it is easy to configure controls, drives and motors. With the support of the CAD CREATOR, product-specific dimensional drawings and 2D/3D CAD models can be created quickly. The CAD CREATOR assists the machine manufacturer's designers, in addition to drafting engineers and project engineers.

Selection and ordering data

Description	Article No.
CAD CREATOR Dimensional drawing and 2D/3D CAD generator on DVD-ROM English, French, German, Italian, Spanish	**6SL3075-0AA00-0AG0**

Benefits

- Provision of dimensional drawings as 2D/3D CAD models in mm and inches
- Display of 2D/3D CAD models and dimensional drawings on integrated viewers
- With the online version, 3D models and dimensional drawings can also be displayed in the form of a downloadable PDF
- Support for all general geometry interfaces STEP, IGES, Parasolid, SAT, VDA, and for special interfaces such as Ideas, NX, Solid Edge, Pro/Engineer, Autocad, Inventor, Mechanical Desktop, Catia and Solidworks
- Multi-language operator interface in English, French, German, Italian and Spanish, and direct Help (English, German)
- Dimensional drawings and 2D/3D CAD models for:
- SIMOTICS motors for Motion Control
  - SIMOTICS S-1FK7, S-1FT7 servomotors
  - SIMOTICS S geared motors
  - SIMOTICS M-1PH8, M-1FE1 main motors
  - SIMOTICS L-1FN3 linear motors
  - SIMOTICS T-1FW3, T-1FW6 torque motors
  - 2SP1 motor spindles
- Components
  - Measuring systems
  - MOTION-CONNECT connection system
- SINAMICS S110, SINAMICS S120
  - Control Units
  - Power Modules (Blocksize/Chassis/Combi)
  - Line Modules (Booksize/Chassis)
  - Line-side components
  - Motor Modules (Booksize/Chassis)
  - DC link components
  - Supplementary system components
  - Load-side power components
  - Encoder system connection
- SINUMERIK
  - CNC controls
  - Operator components for CNC controls
- SIMOTION
  - SIMOTION D
  - SIMOTION C
  - SIMOTION P

The CAD CREATOR offers a variety of options for configuring, but also different methods for searching for a product:

- According to Article No.
- According to technical description

After successful configuration of the product, the dimensional drawings and models are displayed with the integrated viewers and made available for export.

More information

The CAD CREATOR is available on DVD-ROM and as an Internet application.

Additional information is available on the Internet at www.siemens.com/cadcreator

© Siemens AG 2017

Overview

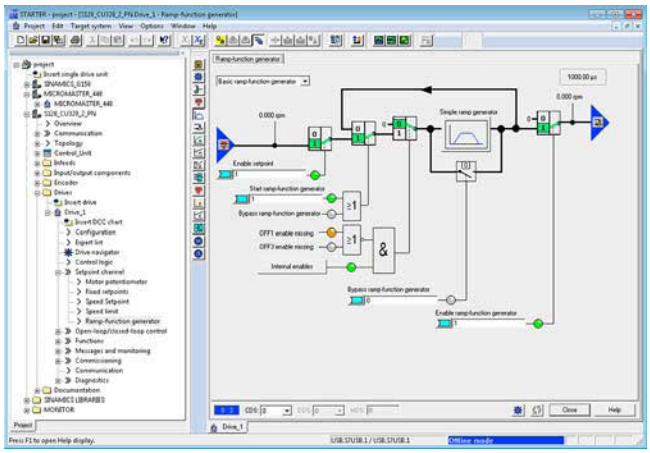

The user-friendly STARTER commissioning tool can be used for:

- Commissioning
- Optimization
- Diagnostics

This software can be operated as a standalone PC application, or integrated as a TIA-compatible program in SIMATIC STEP 7, or highly integrated into the SCOUT Engineering System (for SIMOTION). The basic functions and handling are the same in both cases.

In addition to the SINAMICS drives, STARTER also supports MICROMASTER 4 devices.

The project wizards can be used to create the drives within the structure of the project tree.

Beginners are supported by solution-based dialog guidance, whereby a standard graphics-based display maximizes clarity when setting the drive parameters.

First commissioning is guided by a wizard which makes all the basic settings in the drive. Therefore, getting a motor up and running is merely a question of setting a few of the drive parameters as part of the drive configuration process.

The individual settings required are made using graphics-based parameterization screens, which also precisely visualize the principle of operation of the drive.

Examples of individual settings that can be made include:

- How terminals are used
- Bus interface
- Setpoint channel (e.g., fixed setpoints)
- Closed-loop speed control (e.g., ramp-function generator, limits)
- BICO interconnections
- Diagnostics

For experts, the expert list can be used to specifically and quickly access individual parameters at any time. An individual compilation of frequently used parameters can be saved in dedicated user lists and watch tables.

In addition, the following functions are available for optimization purposes:

- Self-optimization of the controller settings (depending on drive unit)
- Setup and evaluation of trace recordings [1)]
  Tool function for recording 2 × 8 signals with
  - Measuring cursor function
  - Extensive trigger functions
  - Several Y scales
  - Sampling times in the current controller cycle clock

Diagnostics functions provide information about:

- Control/status words
- Parameter status
- Operating conditions
- Communication states

Performance features

- User-friendly: Only a small number of settings need to be made for successful first commissioning: The motor starts to rotate
- Solution-oriented dialog-based user guidance simplifies commissioning
- Self-optimization functions reduce manual effort for optimization.

Minimum system requirements

The following minimum requirements must be complied with:

- Hardware
  - PG or PC with Pentium III min. 1 GHz (recommended >1 GHz)
  - Work memory 2 GB (4 GB recommended)
  - Screen resolution 1024 × 768 pixels, 16-bit color depth
  - Free hard disk memory: min. 5 GB
- Software
  - Microsoft Internet Explorer V6.0 or higher
  - 32-bit operating systems:
    Microsoft Windows 7 Professional incl. SP1
    Microsoft Windows 7 Ultimate incl. SP1
    Microsoft Windows 7 Enterprise incl. SP1 (standard installation)
  - 64-bit operating systems:
    Microsoft Windows 7 Professional SP1
    Microsoft Windows 7 Ultimate SP1
    Microsoft Windows 7 Enterprise SP1 (standard installation)
    Microsoft Windows Server 2008 R2 SP1
    Microsoft Windows 10 Pro
    Microsoft Windows 10 Enterprise

Integration

Data can be exchanged (depending on the version) via PROFIBUS or PROFINET/Ethernet or via a serial interface.

For commissioning and service, a PG/PC can be connected to the CU320-2 Control Unit via PROFIBUS. A PROFIBUS connection must be available with a connecting cable at the PG/PC.

Further, communication between a CU320-2 Control Unit and PG/PC can also be established via Ethernet, either via an (optional) CBE20 Communication Board or the Ethernet interface -X127 on the CU320-2 Control Unit.

Note:

The terminal strip -X127 is suitable as a communication link to the PG/PC only for the purposes of servicing and commissioning.

[1)] Depending on drive unit.
Not supported for MICROMASTER 4, SINAMICS G110, SINAMICS G120 <firmware V4.4, SINAMICS G110D and SINAMICS G120D <firmware V4.5.

© Siemens AG 2017

Selection and ordering data

Description	Article No.
STARTER commissioning tool for SINAMICS and MICROMASTER English, French, German, Italian, Spanish	**6SL3072-0AA00-0AG0**

Note:

In addition to the STARTER commissioning tool, SINAMICS Drive Control Chart (SINAMICS DCC) can be installed. This allows the device functionality in the SINAMICS drive system to be expanded with dedicated technology functions as required.

More information about SINAMICS DCC can be found in section "SINAMICS Drive Control Chart (SINAMICS DCC)".

Accessories

Depending on the version of the Control Unit (CU), the Control Unit of the drive unit can communicate with the programming device (PG) or PC via PROFIBUS or PROFINET/Ethernet or via a serial interface. The following accessories are available for the particular drive system as listed in the following table.

Description		**Recommended accessories** For communication between the drive unit and the programming device or PC Article No.
SINAMICS S120		
• RS232	**SIMATIC S7 connecting cable** Null modem cable, 6 m (19.69 ft)	**6ES7901-1BF00-0XA0**
• PROFIBUS	**CP 5711 communication module** USB adapter for connecting a PG or notebook to PROFIBUS or MPI USB cable (2 m (6.56 ft)) included in scope of supply	**6GK1571-1AA00**
	SIMATIC DP plug-in cable 12 MBaud, for PG connection, pre-assembled with 2 × 9-pin SUB D connector, 3 m (9.84 ft)	**6ES7901-4BD00-0XA0**
• PROFINET/ Ethernet	Standard CAT5 Ethernet cable or PROFINET cable	–

More information

The STARTER commissioning tool is also available on the Internet at
www.siemens.com/starter

© Siemens AG 2017

Overview

SINAMICS Drive Control Chart (SINAMICS DCC) expands the scope of device functions by means of freely available closed-loop control, arithmetic and logic blocks and offers a means by which proprietary technological functions can be graphically configured in the SINAMICS drive system. In addition, local data processing in the drive supports the implementation of modular machine concepts and results in an increase in the overall machine performance. SINAMICS DCC is a part of the Advanced Technology Function, and is installed as an add-on to the STARTER commissioning tool.

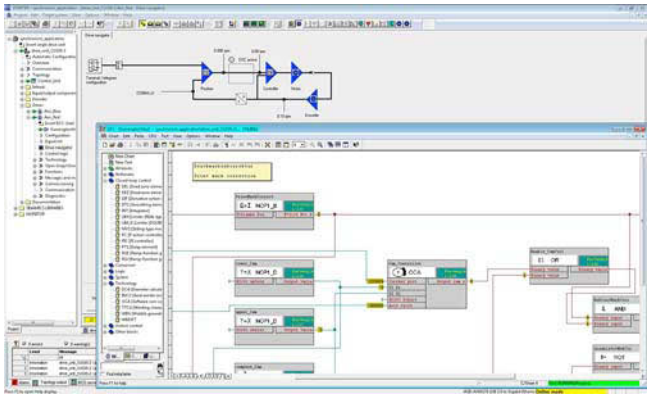

SINAMICS DCC provides users with greater integral scope to adapt systems to the specific functions of their machines. SINAMICS DCC does not limit the number of functions that can be used. The number of functions is limited only by the performance capability of the Control Unit.

SINAMICS DCC is available for the following SINAMICS drive systems:

- SINAMICS G130 and SINAMICS G150
- SINAMICS S120 and SINAMICS S150
- SINAMICS DCM and SINAMICS DCP
- SINAMICS GM150 and SINAMICS SM150
- SINAMICS GL150 and SINAMICS SL150

The user-friendly DCC editor enables easy graphics-based configuration, allows control loop structures to be clearly represented and provides a high degree of reusability of diagrams that have already been created.

The open-loop and closed-loop control functions are defined by using multi-instance-capable blocks (Drive Control Blocks (DCBs)) from a library (DCB library) that are selected and graphically linked with one another by dragging and dropping. Test and diagnostic functions allow the program behavior to be verified and, in the case of a fault, the cause identified.

Two types of DCB library are available, i.e. DCB Standard and DCB Extension. The DCB Standard library supplied with SINAMICS DCC contains a large selection of closed-loop, arithmetic and logic blocks, as well as comprehensive open-loop and closed-loop control functions.

For logically combining, evaluating and acquiring binary signals, all commonly used logic functions are available for selection (AND, XOR, on/off delay, RS flipflop, counter, etc.). A wide range of arithmetic functions, such as absolute value generation, dividers and minimum/maximum evaluation are available to monitor and evaluate numerical quantities.

In addition to the closed-loop drive control, axial winder functions, PI controllers, ramp-function generators or wobble generators are simple to configure.

SINAMICS DCC also offers the DCB Extension library from firmware version V4.6 and higher. This contains an extended range of blocks that is used as an additional, independent library in the DCC Editor. It includes the GMC and Math Extended library.

The GMC contains Motion Control blocks (GEAR, POSMC, CAMD, etc.).

With Math Extended, supplementary mathematical and logical function blocks (ASIN, ACOS, ATAN, LOG, etc.) are made available.

These libraries are ready for downloading along with application examples from the Siemens Application Support website.

Further information can be found in the Drive Applications section.

As well as the option of using the libraries made available by DCB Extension, DCB Extension proprietary libraries can also be created with custom-programmed blocks. These blocks and libraries are programmed with the separate SINAMICS DCB Studio development tool in the C/C++ high-level language and can be used as your own DCB Extension Library in the DCC editor. Use of these blocks as DCB extensions requires a runtime license.

The separate SINAMICS DCB Studio development tool is required for programming the blocks and generating the library as a DCB Extension.

Minimum hardware and software requirements

See STARTER commissioning tool.

Selection and ordering data

SINAMICS DCC comprises the graphical configuring tool (DCC Editor) and the DCB standard library. SINAMICS DCC is installed as an add-on to the STARTER commissioning tool.

The necessary engineering license for each PC (floating) for SINAMICS DCC is acquired at the same time the order is placed. No runtime license is required for the DCB standard library included in the scope of supply.

Existing licenses for SINAMICS DCC V2.1, V2.2 SP1 and V2.3 SPx are also valid for SINAMICS DCC V2.4 SP1.
An upgrade version including an engineering license for applications with STARTER V4.5 SP1 is available for existing SINAMICS DCC V2.0 SPx.

Description	Article No.
SINAMICS DCC V2.4 SP1 for STARTER V4.5 SP1 Graphic configuring with SINAMICS DCC DCC Editor + DCB standard library	
• Single-user engineering license, with data carrier	**6AU1810-1HA24-1XA0**
• Upgrade engineering license, with data carrier	**6AU1810-1HA24-1XE0**
DCB Extension license Runtime license for license upgrading with firmware version V4.6 or later (can also be ordered in conjunction with the CompactFlash card, see CompactFlash card for CU310-2 and CU320-2 Control Units)	**6SL3077-0AA00-0AB0**
SINAMICS DCB Studio V1.2 Development tool for programming blocks and DCB Extension libraries with firmware version V4.6 or later	On request

© Siemens AG 2017

Overview

Hardware configuration from generic station description file (GSD/GSDML)

The following functionalities are available with the GSD/GSDML configuration in the TIA Portal:

- Control
  - SIMATIC technology objects and blocks for controlling the drives are already integrated
  - Synchronization of SIMATIC technology objects and the SINAMICS drives
  - Support of application-specific drive control through user-defined PLC data types (UDTs)
- Safety Control
  - Fail-safe control through an intuitive block
  - Support of customer-specific, fail-safe control through user-defined fail-safe PLC data types (F-UDTs)
- Message classes are available throughout the system without engineering effort (SIMATIC PLC Web server, HMI, S7 controller, TIA Portal)
- Parameters downloaded in above data block (block is generated in STARTER)
- Routing across network boundaries for remote maintenance
- Generating a device-specific GSDML file by means of a STARTER-integrated script

Commissioning tools

STARTER

For further information, refer to section "STARTER commissioning tool"

SINAMICS Startdrive

In future, SINAMICS Startdrive will be a tool integrated into the TIA Portal for configuring, commissioning, and diagnosing the entire SINAMICS drive family. The SINAMICS Startdrive commissioning tool has been optimized for user friendliness and consistent use of the advantages of a common working environment for PLC, HMI and drives provided by the TIA Portal.

For more information, go to
www.siemens.com/startdrive

© Siemens AG 2017

Overview

Integrated Web server for efficient diagnostics and maintenance – available everywhere at all times

The Web server can be integrated into the SINAMICS drive system to provide an efficient diagnostics and maintenance option. The Web server provides access to multi-faceted new options for drive diagnostics and remote maintenance for every network-compatible PC with a Web browser. For example:

- Downloading a configuration
- Updating firmware
- Providing a status overview of the drive
- Evaluating warnings and fault messages
- Monitoring and adapting parameter settings
- Saving machine documentation, including notes
- Setting up of a user administration to provide access protection

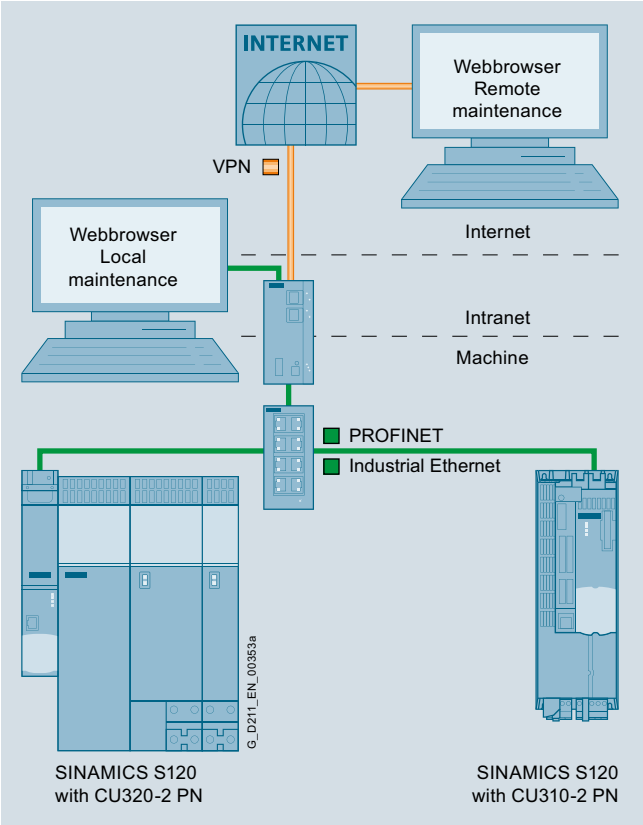

Integration of the SINAMICS Web server as shown by the example of the SINAMICS S120 and PROFINET communication

The SINAMICS Web server is a component of the SINAMICS firmware as from V4.7 on the CompactFlash card for the Control Units

- CU310-2 DP
- CU310-2 PN
- CU320-2 DP
- CU320-2 PN

For further information, refer to "CU310-2 and CU320-2 Control Units".

Benefits

Shorter machine downtimes

- Efficient diagnostics and maintenance

Direct language selection

- English, German, Chinese, Italian, French, Spanish

Accessibility

- Via all LAN or PROFINET interfaces

Two users with different rights can be configured

- e. g. for operators and service personnel

Diagnostic functions

- Quick overview of the current configuration and the state of the drive
- Understandable diagnostic information and messages are displayed in plain text in multiple languages

Freely configurable parameter lists

- Monitoring parameters for diagnostic purposes, for example for operating personnel
- Adapting/optimizing existing projects, for example for service personnel

Updating functions

- The device functionality can be updated from any network-compatible PC (locally or by remote access)
- Series commissioning is possible without the STARTER commissioning tool

Archiving machine documentation

- Appropriate documentation and the state of the service and maintenance work are available on site to the operating and service personnel

Access security

- Protection against unauthorized access to the drive information

Integration of customer-specific websites

- Integrating customer know-how into the websites enables the quick, purposeful diagnostics of the customer application

Application

The integrated web server is ideal for applications not requiring any special software (STARTER) or version dependencies. Easy diagnostics and maintenance are possible both locally and remotely, provided appropriate security measures are applied.

More information

Further information about the SINAMICS Web server is available on the Internet at

www.siemens.com/sinamics-webserver

© Siemens AG 2017

Overview

SIMATIC Programs	Configuration / Commissioning
Drive ES PCS 7	Drive ES Basic

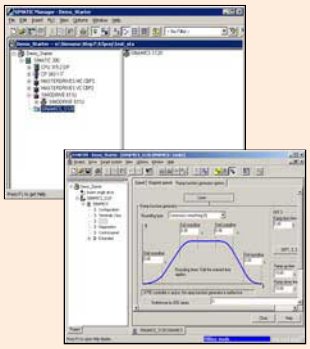

G_D211_EN_00275b

Drive ES is the engineering system used to integrate the communication, configuration and data management functions of Siemens drive technology into the SIMATIC automation world easily, efficiently and cost-effectively.

Various software packages are available for selection:

- Drive ES Basic (phase-out product)
- Drive ES Basic Maintenance (available soon)
- Drive ES PCS 7

Drive ES (**D**rive **E**ngineering **S**oftware) fully integrates drives from Siemens into the world of Totally Integrated Automation.

Design

Various software packages are available for selection:

- **Drive ES Basic** (phase-out product)
- **Drive ES Basic Maintenance** (available soon)
- **Drive ES PCS 7** (APL Style or Classic Style)

Drive ES Basic (phase-out product)

Drive ES Basic is for first-time users of the world of Totally Integrated Automation and the basic software for setting the parameters of all drives online and offline in this environment. Drive ES Basic enables both the automation system and the drives to be handled using the SIMATIC Manager software. Drive ES Basic is the starting point for common data archiving for complete projects and for extending the use of the SIMATIC teleservice to drives. Drive ES Basic provides the configuration tools for the new Motion Control functions – slave-to-slave communication, equidistance and isochronous operation with PROFIBUS DP and ensures that drives with PROFINET IO are simply integrated into the SIMATIC environment.

Note:

For SINAMICS and MICROMASTER 4 drives, this TIA functionality is provided with the STARTER commissioning tool (V4.3.2 and higher).

Drive ES Basic Maintenance (available soon)

This software product will ensure TIA functionality for the previous drive systems not supported by STARTER. Drive ES Basic Maintenance will thus replace the current product Drive ES Basic.

Drive ES PCS 7 (APL Style or Classic Style)

Drive ES PCS 7 links the drives with a PROFIBUS DP interface into the SIMATIC PCS 7 process control system, and it requires that SIMATIC PCS 7, V6.1 and higher has first been installed. Drive ES PCS 7 provides a block library with function blocks for the drives and the corresponding faceplates for the operator station, which enables the drives to be operated from the PCS 7 process control system. From V6.1 and higher, drives will also be able to be represented in the PCS 7 Maintenance Station.

From Drive ES PCS 7 V8.0 and higher, two versions of the library are available: The APL (Advanced Process Library) variant and the previous version in the so-called Classic Style.

Detailed contents of the Drive ES PCS 7 (APL Style or Classic Style)

- **Function block library for SIMATIC PCS 7** Faceplates and control blocks for SIMOVERT MASTERDRIVES VC and MC, as well as MICROMASTER/MIDIMASTER of the third and fourth generation as well as SIMOREG DC-MASTER and SINAMICS
- **STEP 7 slave object manager** for convenient configuration of drives and non-cyclic PROFIBUS DP communication with the drives
- **STEP 7 device object manager** for easy configuration of drives with PROFINET-IO interfaces (V8.0 SP1 and higher)
- **SETUP program** for installing the software in the PCS 7 environment

© Siemens AG 2017

Selection and ordering data

Description	Article No.
Drive ES PCS 7 V8.0 SPx *)	
Function block library for PCS 7 for the integration of drives in Classic Style (as predecessor)	
Requirement: PCS 7 V8.0 and higher	
Type of delivery: CD-ROM Languages: Ger, Eng, Fr, It, Sp with electronic documentation	
• Single-user license incl. 1 runtime license	**6SW1700-8JD00-0AA0**
• Runtime license (without data carrier)	**6SW1700-5JD00-1AC0**
• Update service for single-user license	**6SW1700-0JD00-0AB2**
• Upgrade from V6.x to V8.0 SPx *)	**6SW1700-8JD00-0AA4**
Drive ES PCS 7 APL V8.0 SPx *)	
Function block library for PCS 7 for the integration of drives in APL Style (Advanced Process Library)	
Requirement: PCS 7 V8.0 and higher	
Type of delivery: CD-ROM Languages: Ger, Eng, Fr, It, Sp with electronic documentation	
• Single-user license incl. 1 runtime license	**6SW1700-8JD01-0AA0**
• Runtime license (without data carrier)	**6SW1700-5JD00-1AC0**
• Update service for single-user license	**6SW1700-0JD01-0AB2**
• Upgrade of APL V8.0 to V8.0 SP1 or Drive ES PCS 7 V6.x, V7.x, V8.x classic to Drive ES PCS 7 APL V8.0 SPx *)	**6SW1700-8JD01-0AA4**
Drive ES PCS 7 V8.1 SPx *)	
Function block library for PCS 7 for the integration of drives in Classic Style (as predecessor)	
Requirement: PCS 7 V8.1 and higher	
Type of delivery: CD-ROM Languages: Ger, Eng, Fr, It, Sp with electronic documentation	
• Single-user license incl. 1 runtime license	**6SW1700-8JD00-1AA0**
• Runtime license (without data carrier)	**6SW1700-5JD00-1AC0**
• Update service for single-user license	**6SW1700-0JD00-0AB2**
• Upgrade from V6.x/V7.x/V8.x to V8.1 SPx *)	**6SW1700-8JD00-1AA4**
Drive ES PCS 7 APL V8.1 SPx *)	
Function block library for PCS 7 for the integration of drives in APL Style (Advanced Process Library)	
Requirement: PCS 7 V8.1 and higher	
Type of delivery: CD-ROM Languages: Ger, Eng, Fr, It, Sp with electronic documentation	
• Single-user license incl. 1 runtime license	**6SW1700-8JD01-1AA0**
• Runtime license (without data carrier)	**6SW1700-5JD00-1AC0**
• Update service for single-user license	**6SW1700-0JD01-0AB2**
• Upgrade of APL V8.x to V8.1 SPx *) or Drive ES PCS 7 V6.x, V7.x, V8.x classic to Drive ES PCS 7 APL V8.1 SPx *)	**6SW1700-8JD01-1AA4**

Description	Article No.
Drive ES PCS 7 V8.2 SPx *)	
Function block library for PCS 7 for the integration of drives in Classic Style (as predecessor)	
Requirement: PCS 7 V8.2 and higher	
Type of delivery: CD-ROM Languages: Ger, Eng, Fr, It, Sp with electronic documentation	
• Single-user license incl. 1 runtime license	**6SW1700-8JD00-2AA0**
• Runtime license (without data carrier)	**6SW1700-5JD00-1AC0**
• Update service for single-user license	**6SW1700-0JD00-0AB2**
• Upgrade from V6.x/V7.x/V8.x to V8.2 SPx *)	**6SW1700-8JD00-2AA4**
Drive ES PCS 7 APL V8.2 SPx *)	
Function block library for PCS 7 for the integration of drives in APL Style (Advanced Process Library)	
Requirement: PCS 7 V8.2 and higher	
Type of delivery: CD-ROM Languages: Ger, Eng, Fr, It, Sp with electronic documentation	
• Single-user license incl. 1 runtime license	**6SW1700-8JD01-2AA0**
• Runtime license (without data carrier)	**6SW1700-5JD00-1AC0**
• Update service for single-user license	**6SW1700-0JD01-0AB2**
• Upgrade of APL V8.x to V8.2 SPx*) or Drive ES PCS 7 V6.x, V7.x, V8.x classic to Drive ES PCS 7 APL V8.2 SPx *)	**6SW1700-8JD01-2AA4**

Options

Drive ES software update service

A software update service can also be purchased for the Drive ES software. The user will automatically receive the latest software, service packs and full versions for one year after ordering.

The update service can only be ordered in addition to an existing (i.e. previously ordered) full version.

- Period of update service: 1 year

The update service is automatically extended by 1 further year unless canceled up to 6 weeks prior to expiration.

Description	Article No.
Drive ES PCS 7	
• Update service for single-user license	**6SW1700-0JD00-0AB2**
Drive ES PCS 7 APL	
• Update service for single-user license	**6SW1700-0JD01-0AB2**

More information

Additional information is available on the Internet at www.siemens.com/drive-es

*) Orders are automatically supplied with the latest Service Pack (SP).

© Siemens AG 2017

Overview

General configuration sequence

The function description of the machine provides the basis for the configuration. The definition of the components is based on physical dependencies and is usually carried out as follows:

Step	Description of configuration activity
1	Clarification of type of drive
2	Definition of boundary conditions and integration into automated system
3	Definition of loading case, calculation of max. load torque, definition of motor
4	Definition of the Motor Module
5	Repetition of steps 3 and 4 for additional axes
6	Calculation of the required infeed power and defining the Line Module
7	Specification of the required control performance and selection of the Control Unit, definition of component cabling
8	Specification of the line-side power options (main switch, fuses, line filters, etc.) and cable cross-sections for connecting to the line supply and motor
9	Definition of additional system components
10	Calculation of the current requirement for the 24 V DC supply for the components and specification of power supplies (SITOP devices, Control Supply Modules)
11	Specification of components for connection system
12	Configuration of drive line-up components
13	Thermal design of the control cabinet

Configuration begins with the mechanical interface to the machine. A suitable motor is selected according to the specified torques and speeds. A matching power unit is then also chosen. Depending on the requirements of the machine, the motor is supplied as a single drive via a Power Module or within a multi-motor drive group via a Motor Module. Once the basic components have been defined, the system components for matching to the electrical and mechanical interfaces are selected.

The SIZER for Siemens Drives engineering tool allows the correct components to be selected quickly and easily. Based on the torque and speed characteristics entered, SIZER for Siemens Drives guides the user through the configuring process, identifying suitable motors and matching SINAMICS power units and other system components.

The following sections describe those SINAMICS S120 components which are needed to create a drive system subject to certain boundary conditions. For information about individual components, please also refer to the online help of the SIZER for Siemens Drives engineering tool.

© Siemens AG 2017

Overview

The electromagnetic compatibility describes – according to the definition of the EMC directive – the "capability of a device to work satisfactorily in an electromagnetic environment without itself causing electromagnetic interference which is unacceptable for other devices present in this environment". To guarantee that the appropriate EMC standards are observed, the devices must demonstrate a sufficiently high noise immunity, and also the emitted interference must be limited to acceptable values.

Product standard EN 61800-3 describes the EMC requirements placed on "Variable-speed drive systems".

A variable-speed drive system (or Power Drive System PDS) consists of the Control Unit and Power Module or Control Unit, Line Module and Motor Module plus the relevant electric motors and encoders including connecting cables.

The driven machine is not part of the drive system.

Environments

EN 61800-3 defines different requirements depending on the location where the drive is installed, designated as a first and second environment.
Residential buildings or locations where the drive system is directly connected to a public low-voltage supply without intermediate transformer are defined
as the **first environment**.
All locations outside a residential area are defined as the **second environment**. These are basically industrial areas which are supplied from the medium-voltage network via their own transformers.

Categories

Four different categories are defined in EN 61800-3 depending on the installation site of the drive:

Category C1: Drive systems for rated voltages < 1000 V for unlimited use in the first environment.

Category C2: Stationary drive systems for rated voltages < 1000 V for use in the second environment. Use in the first environment is possible if the drive system is operated and installed by qualified personnel. The warning information and installation instructions supplied by the manufacturer must be observed.

Category C3: Drive systems for rated voltages < 1000 V for exclusive use in the second environment.

Category C4: Drive systems for rated voltages ≥ 1000 V, for rated currents ≥ 400 A or IT supply systems for use in complex systems in the second environment. An EMC plan must be drawn up.

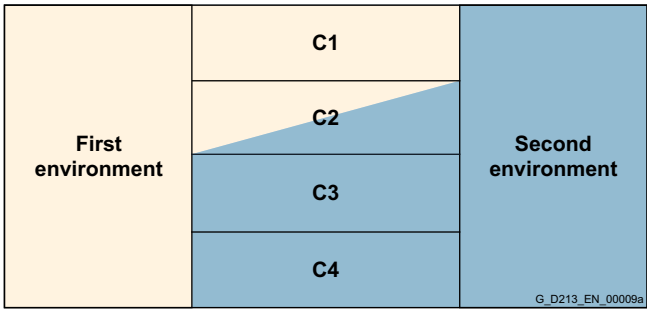

© Siemens AG 2017

EMC notes for the application of the product standard EN 61800-3

Configuration

SINAMICS S120 Power Drive Systems (PDS) can be operated in the first and second environments. The measures necessary for operation in the respective environment are subsequently listed.

Measures for complying with product standard EN 61800-3 second environment

Interference immunity

The SINAMICS S120 drive system is suitable for operation in the second environment.

Regarding interference immunity, SINAMICS S120 can be used in the **first and second environments**.

Interference emission – complying with Category C2 second environment

Regarding interference emission, to comply with the limit values according to EN 61800-3 second environment, Category C2, the following measures must be applied:

- The drive system must be installed in compliance with EMC regulations by appropriately trained professionals.
- The SINAMICS S120 drive system requires a radio interference suppression filter, Category C2 (integrated as line filter, or as optional external line filter with/without line reactor)
- The pulse frequency is less than or equal to the rated pulse frequency
- The maximum motor cable length is complied with (shielded)
- Line supply with grounded neutral point (TN/TT supply system)

Device-specific assignment of the measures to comply with product standard EN 61800-3 second environment, Category C2

SINAMICS S120 drive system			Measures for		
			Radio interference suppression filter, Category C2	Maximum pulse frequency f_p	Maximum motor cable length (shielded)
Device format	Supply voltage	Frame size		kHz	m (ft)
Booksize Line Modules	380 ... 480 V 3 AC	–	External line filter required [1]	4 [2]	350 (1148)
Chassis Active Line Modules Smart Line Modules	380 ... 480 V 3 AC	FX ... JX	External line filter required	4 [2]	300 (984)
	500 ... 690 V 3 AC	FX ... JX	External line filter required	4 [2]	300 (984)
Chassis Basic Line Modules	380 ... 480 V 3 AC	FB ... GD	External line filter plus line reactor required [1]	4 [2]	100 (328)
	500 ... 690 V 3 AC	FB ... GD	External line filter plus line reactor required [1]	4 [2]	100 (328)
Chassis Power Modules	380 ... 480 V 3 AC	FX and GX	External line filter plus line reactor required [1]	2	100 (328)
Blocksize Power Modules with integrated line filter	200 ... 240 V 1/3 AC	FSA ... FSC	No measure required, as a line filter is integrated	4	50 (164)
	380 ... 480 V 3 AC	FSA ... FSC	No measure required, as a line filter is integrated	4	50 (164)
		FSD ... FSE	No measure required, as a line filter is integrated	4	150 (492)
		FSF	No measure required, as a line filter is integrated	2	150 (492)
	500 ... 690 V 3 AC	FSD and FSE	No measure required, as a line filter is integrated	2	100 (328)
		FSF	No measure required as a line filter is integrated (Category C3)	2	150 (492)
Blocksize Power Modules without integrated line filter	200 ... 240 V 3 AC	FSD ... FSF	External line filter required	4	150 (492)
	380 ... 480 V 3 AC	FSA ... FSC	External line filter required [1]	4	50 (164)
		FSD ... FSE	External line filter required [1]	4	150 (492)
		FSF	External line filter required [1]	2	150 (492)
	500 ... 690 V 3 AC	FSD ... FSF	External line filter required [1]	2	100 (328)

Interference emission – complying with Category C3 second environment

All Active Line Modules in booksize format, Basic Line Modules in booksize format 100 kW as well as Line Modules in chassis format in the standard version are compliant.
A line reactor is required for Power Modules in chassis format.

The maximum cable lengths and pulse frequencies (see the previous table) must be taken into account.
For Active Line Modules in booksize format, when using an external line filter, the maximum cable length can be increased to 1000 m (3281 ft).

Interference emission – complying with Category C4 second environment

When connected to IT line supplies, only devices without integrated filter, Basic Line Modules in booksize format up to 40 kW, and all Smart Line Modules in booksize format are permissible. To limit symmetrical interference emission, suitable external filters without capacitors connected to ground must be used.

Further selected accessories are available from "Siemens Product Partner for Drives Options":
www.siemens.com/drives-options-partner

[1] Selection and ordering data for line filters and line reactors see sections Line-side power components.

[2] Refers to the pulse frequency of the Motor Modules.

© Siemens AG 2017

Configuration (continued)

Measures for complying with product standard EN 61800-3 first environment

Only PM240-2 Power Modules in blocksize format can be used in the first environment.

Interference immunity

The SINAMICS S120 drive system is suitable for operation in the second environment.

Regarding interference immunity, SINAMICS S120 can be used in the **first and second environments**.

Interference emission – complying with Category C2 first environment

For use in the first environment, **in addition** to the requirements for use in the second environment, device-specific notes to maintain the **harmonic current** limits must be **taken into consideration**. Here, EMC product standard EN 61800-3 makes reference to the standards pertaining to harmonic currents: EN 61000-3-2 and EN 61000-3-12.

Device-specific notes for complying with harmonic current limit values according to EN 61000-3

- Power Modules with a power $P_N \leq 1$ kW
  Complying with limit values according to EN 61000-3-2 cannot be guaranteed in this case. The installation company or company operating professionally used devices must obtain authorization to connect the device to the low-voltage grid from the responsible power utility company.
- Power Modules with a power $P_N > 1$ kW and a rated input current $I_{rated,\ input} < 16$ A
  These devices are not subject to any limit values regarding the harmonic currents, and can therefore be connected to the public low-voltage grid without prior authorization.
- Power Modules with a rated input current > 75 A
  There are no applicable standards when installing these types of devices. However, it is recommended that the utility company (grid operator) be informed when connecting such a device.

Device-specific measures to comply with harmonic current limit values:

Power Modules in **blocksize** format with a rated input current $I_{rated,\ input} > 16$ A and ≤ 75 A				Measures to comply with harmonic current limits according to EN 61000-3-12	
Rated power	Rated input current $I_{rated,\ input}$	Supply voltage	Frame size	Line reactor $u_k = 4$ %	Minimum short-circuit power S_{SC} at the connection point of the customers plant or system
3 ... 7.5 kW	20.7 ... 37 A	200 ... 240 V 3 AC	FSC	Required [1]	$S_{SC} \geq 120 \times \sqrt{3} \times U_{line} \times I_{rated,\ input}$
5.5 ... 15 kW	17.2 ... 39.9 A	380 ... 480 V 3 AC	FSB and FSC	Required [1]	
11 ... 18.5 kW	40 ... 64 A	200 ... 240 V 3 AC	FSD	Not required	$S_{SC} \geq 120 \times \sqrt{3} \times U_{line} \times I_{rated,\ input}$
18.5 ... 37 kW	36 ... 70 A	380 ... 480 V 3 AC	FSD	Not required	

Example of calculating the minimum short-circuit power required

Determining the minimum short-circuit power S_{SC} for the Power Module in blocksize format FSD: 37 kW with $U_{line} = 400$ V and $I_{rated,\ input} = 70$ A

$S_{SC} \geq 120 \times \sqrt{3} \times U_{line} \times I_{rated,\ input}$

The short-circuit power must be greater than 120 × 1.73 × 400 V × 70 A = 5812 kVA

As guide value, this typically corresponds to a low-voltage transformer with an apparent power of approximately 300 ... 400 kVA.

Note:

The installation company or company operating the device is responsible for ensuring that this device is only connected at a connection point with an appropriate short-circuit power (fault level), if this is necessary after consulting the power utility (grid operator).
The installation company or company operating the device requires authorization from the power utility (grid operator) in the following situations:
- Three-phase connection to a line supply with lower short-circuit power
- Three-phase connection without a line reactor
- Connecting single-phase devices with a rated input current $I_{rated,\ input}$ >16 A

[1] Available from "Siemens Product Partner for Drives Options"
www.siemens.com/drives-options-partner

© Siemens AG 2017

Configuration (continued)

Maximum permissible cable lengths from the motor to the converter when using output reactors or filters depending on the voltage range and the Power Module being used

The following load-side power components in the appropriate frame sizes are optionally available for the Power Modules and result in the following maximum cable lengths:

	Maximum permissible motor cable lengths (shielded/unshielded) in m (ft)					
Frame size	**FSA**	**FSB**	**FSC**	**FSD**	**FSE**	**FSF**
PM240-2 Power Module with integrated braking chopper						
Available frame sizes						
• 200 V versions	✓	✓	✓	✓	✓	✓
• 400 V versions	✓	✓	✓	✓	✓	✓
• 690 V versions	–	–	–	✓	✓	✓
With optional output reactor						
• At 200 ... 240 V 1 AC/3 AC	150/225 (492/738)	150/225 (492/738)	150/225 (492/738)	–	–	–
• At 380 ... 415 V 3 AC	150/225 (492/738)	150/225 (492/738)	150/225 (492/738)	200/300 (656/984) [3]	200/300 (656/984) [3]	300/450 (984/1476) [3]
• At 440 ... 480 V 3 AC	100/150 (328/492)	100/150 (328/492)	100/150 (328/492)	200/300 (656/984) [3]	200/300 (656/984) [3]	300/450 (984/1476) [3]
• At 500 ... 690 V 3 AC	–	–	–	200/300 (656/984) [3]	200/300 (656/984) [3]	300/450 (984/1476) [3]
With integrated line filter class A						
• At 200 ... 240 V 1 AC/3 AC	50/- (164/-)	50/- (164/-)	50/- (164/-)	–	–	–
• At 380 ... 480 V 3 AC	50/- (164/-)	100/- (328/-) [2]	150/- (492/-) [2]	150/- (492/-)	150/- (492/-)	150/- (492/-)
• At 500 ... 690 V 3 AC	–	–	–	100/- (328/-)	100/- (328/-)	150/- (492/-) (category C3)
With optional, external line filter class B according to EN 55011 to comply with cable-conducted radio interference emissions according to EN 61800-3 EMC Category C1 [1], together with unfiltered Power Modules						
• At 380 ... 480 V 3 AC	50/- (164/-)	50/- (164/-)	50/- (164/-)	–	–	–
With optional, external line filter class B according to EN 55011 and output reactor to comply with radio interference emissions according to EN 61800-3 EMC Category C2 [1], together with unfiltered Power Modules						
• At 380 ... 415 V 3 AC	150/- (492/-)	150/- (492/-)	150/- (492/-)	–	–	–
• At 440 ... 480 V 3 AC	100/- (328/-)	100/- (328/-)	100/- (328/-)	–	–	–

More information

Converters are equipment used on a professional basis, deployed in certain areas of business and industry – and are not operated in the general public domain.

For EMC-compliant installation, observe the information in the Configuration Manual EMC installation guideline:
https://support.industry.siemens.com/cs/document/60612658

[1] Further information is available on the Internet at www.siemens.com/sinamics-g120/documentation

[2] The values apply for cables with low capacitance, e.g. MOTION-CONNECT. When using standard CY cables, the maximum motor cable length is 50 m (164 ft) (shielded).

[3] The maximal cable lengths for frame sizes FSD to FSF will not be increased with a motor reactor. The motor reactor reduces the load on the motor windings by reducing the voltage gradients (du/dt).

© Siemens AG 2017

Overview

For the closed-loop control of drives and the implementation of basic technological tasks, for SINAMICS S120 the CU320-2 Control Unit is available for multi-axis applications, and the CU310-2 Control Unit is available for individual drives.

Sophisticated Motion Control tasks are best supported using the powerful SIMOTION D Control Units (D410-2, D425-2, D435-2, D445-2, D455-2) with scaled performance.

Each of these Control Units is based on object-orientated SINAMICS S120 standard firmware, which includes all of the usual V/f control modes, scalable so that even the highest performance requirements can be satisfied.

The following are ready-to-configure drive objects (drive controls):

- The control for a line infeed:
  Infeed Control
- The control for the broad scope of rugged asynchronous (induction) motors and torque motors, including sensorless:
  Vector Control
- The control for permanent-magnet excited synchronous and servo asynchronous motors with demanding dynamic requirements:
  Servo Control

All these control versions are based on the principle of field-oriented, closed-loop vector control, with a special expansion for reluctance motors.

The most commonly used V/f control modes are stored in the "Vector control" drive object and are ideal for implementing even simple applications such as group drives with SIEMOSYN motors.

Configuration

Guide to selecting a closed-loop control variant

SINAMICS S closed-loop control properties

Criteria for assessing control quality	Explanations, definitions
Rise time	The rise time is the period which elapses between an abrupt change in a setpoint and the moment the actual value first reaches the tolerance band (2 %) around the setpoint. The dead time is the period which elapses between the abrupt change in the setpoint and the moment the actual value begins to increase. The dead time is partially determined by the read-in, processing and output cycles of the digital closed-loop control. Where the dead time constitutes a significant proportion of the rise time, it must be separately identified.
Characteristic angular frequency -3 dB	The limit frequency is a measure of the dynamic response of a closed-loop control. A pure sinusoidal setpoint is input to calculate the limit frequency; no part of the control loop must reach the limit. The actual value is measured under steady-state conditions and the ratio between the amplitudes of actual value and setpoint is recorded. -3 dB limit frequency: Frequency at which the absolute value of the actual value drops by 3 dB (to 71 %) for the first time. The closed-loop control can manage frequencies up to this value and remain stable.
Ripple	The ripple is the undesirable characteristic of the actual value which is superimposed on the mean value (useful signal). Oscillating torque is another term used in relation to torque. Typical oscillating torques are caused by certain motor slot arrangements, by limited encoder resolution or by the limited resolution of the voltage control of the IGBT power unit. The torque ripple is also reflected in the speed ripple as being indirectly proportional to the mass inertia of the drive.
Accuracy	The accuracy defines the magnitude of the average, repeatable deviation between the actual value and setpoint under rated operating conditions. Deviations between the actual value and setpoint are caused by internal inaccuracies in the measuring and control systems. External influencing factors, such as temperature or speed, are not included in the accuracy assessment. The closed-loop and open-loop controls should be optimized with respect to the relevant variable.

© Siemens AG 2017

Configuration (continued)

SINAMICS S performance characteristics

Characteristics	**Servo Control**	**Vector Control**	**V/f control**	Notes
Typical application	• Drives with high dynamic motion control • Angular-locked synchronism with isochronous PROFIBUS/ PROFINET in conjunction with SIMOTION • For use in machine tools and clocked production machines	• Variable-speed drives with high speed and torque stability in general machinery construction • Especially suitable for induction motors and reluctance motors (1FP1)	• Drives with low requirements on dynamic response and accuracy • Group drives running with a high degree of precision, e.g. on textile machines with SIEMOSYN motors	Mixed operation of Servo Control and Vector Control is not possible on CU320-2. Mixed operation is possible for V/f control modes.
Dynamic response	Very high	High	Low	Highest dynamic response with 1FK7 High Dynamic synchronous motors and Servo Control.
Control modes with encoder	Position control/ Speed control/ Torque control	Position control/ Speed control/ Torque control	None	SIMOTION D with Servo Control is standard for motion control.
Control modes without encoder	Speed control	Speed control/torque control	All V/f control modes	With Servo for induction motors only. With V/f control, the speed can be kept constant by means of selectable slip compensation.
Asynchronous motor (induction motor)	Yes	Yes	Yes	V/f control (textiles) is recommended for SIEMOSYN motors.
Synchronous motor	Yes	Yes	No	
Reluctance motor (1FP1)	No	Yes	No	
Torque motor	Yes	Yes	No	
Linear motor	Yes	No	No	
Permissible ratio of motor rated current to rated current of Motor Module	1:1 to 1:4	1.3:1 to 1:4	1:1 to 1:12	For Servo Control and Vector Control, maximum control quality up to 1:4. Between 1:4 and 1:8, increasing restrictions regarding torque and rotational accuracy. V/f control is recommended for < 1:8.
Maximum number of parallel-connected motors per Motor Module	4	8	Unlimited in theory	Motors with identical power ratings can only be connected in parallel if they are induction motors. With V/f Control, the motors can have different power ratings.
Setpoint resolution position controller	31 bit + sign	31 bit + sign	–	
Setpoint resolution speed/ frequency	31 bit + sign	31 bit + sign	0.001 Hz	
Setpoint resolution torque	31 bit + sign	31 bit + sign	–	
Maximum output frequency				Values valid for the factory setting High output frequencies can only be achieved when using suitable motors and the appropriate parameterization. For synchronous motors, observe the voltage limit (2 kV) and use a VPM module.
• For current controller clock cycle/pulse frequency	660 Hz [1)] with 125 µs/4 kHz	330 Hz with 250 µs/4 kHz	400 Hz with 250 µs/4 kHz	
• For current controller clock cycle/pulse frequency (chassis frame sizes FX and GX)	330 Hz with 250 µs/2 kHz	160 Hz with 250 µs/2 kHz	200 Hz with 250 µs/2 kHz	
• For current controller clock cycle/pulse frequency (chassis frame sizes HX and JX)	Not permitted	100 Hz with 400 µs/1.25 kHz	100 Hz with 400 µs/1.25 kHz	Only for induction motors: When using edge modulation, 600 Hz is possible at 4 kHz, or 300 Hz at 2 kHz and 200 Hz at 1.25 kHz.
Maximum field weakening				With Servo Control combined with encoder and appropriate special motors, field weakening up to 16 times the field-weakening threshold speed is possible. These values refer to 1FT7/1FK7 synchronous motors. Note voltage limit (k_E factor) for third-party motors.
• For asynchronous (induction) motors	5 times	5 times	4 times	
• For synchronous motors	2 times	2 times	–	
• For reluctance motors (1FP1)	–	2 times	–	

[1)] The high output frequency option is required to enable output frequencies above 550 Hz.

For additional information see section Control Units, and on the Internet at https://support.industry.siemens.com/cs/document/104020669

© Siemens AG 2017

Configuration (continued)

Fundamental closed-loop control characteristics of SINAMICS S

- Booksize format, pulse frequency 4 kHz, closed-loop torque control

	Servo Control		**Vector Control**		Notes
Synchronous motor	**1FK7 with R14DQ [1)]**	**1FT7**	Vector Control is not designed as an operating mode for 1FK7/1FT7 synchronous motors.		
Controller cycle	125 µs	125 µs			
Rise time (without delay)	0.7 ms	0.5 ms			At a speed operating range from 50 rpm for resolver.
Characteristic angular frequency -3 dB	650 Hz	900 Hz			In this case, the dynamic response is determined primarily by the encoder system.
Torque ripple	3 % of M_0	0.6 % of M_0			For a speed operating range of 20 rpm up to rated speed. A ripple of < 1 % is possible with an absolute encoder ≤ 1 rpm. Not possible with resolver.
Torque accuracy	± 1.5 % of M_0	± 1.5 % of M_0			Measured value averaged over 3 s. With motor identification and friction compensation. In the torque operating range up to ± M_0. Speed operating range 1:10 up to rated speed. Attention: External influences such as motor temperature can cause an additional long-time inaccuracy (constancy) of about ±2.5 %. Approx. ±1 % lower accuracy in field-weakening range.
Induction motor	**1PH8 without encoder**	**1PH8 with incremental encoder 1024 S/R**	**1PH8 without encoder**	**1PH8 with incremental encoder 1024 S/R**	
Controller cycle	125 µs	125 µs	250 µs	250 µs	
Total rise time (without delay)	–	0.8 ms	2 ms	1.2 ms	With encoderless operation in speed operating range 1:10, with encoder 50 rpm and above up to rated speed.
Characteristic angular frequency -3 dB	–	600 Hz	250 Hz	400 Hz	With encoderless operation in speed operating range 1:10. The dynamic response is improved when using an encoder (feedback signal).
Torque ripple	–	1.5 % of M_{rated}	2 % of M_{rated}	2 % of M_{rated}	With encoderless operation in speed operating range 1:20, with encoder 20 rpm and above up to rated speed.
Torque accuracy	–	± 3.5 % of M_{rated}	± 2 % of M_{rated}	± 1.5 % of M_{rated}	Measured value averaged over 3 s. With motor identification and friction compensation, temperature effects compensated by KTY84 and mass model. In torque operating range up to ± M_{rated}. Approx. additional inaccuracy of ± 2.5 % in field-weakening range. Servo: Speed operating range 1:10 referred to rated speed. Vector: Speed operating range 1:50 referred to rated speed.

[1)] R14DQ: Resolver 14 bit (resolution 16384, internally 2-pole).

© Siemens AG 2017

Configuration (continued)

Fundamental closed-loop control characteristics of SINAMICS S (continued)

- Booksize format, pulse frequency 4 kHz, closed-loop speed control

	Servo Control		**Vector Control**		Notes
Synchronous motor	**1FK7 with R14DQ [1)]**	**1FT7**	Vector Control is not designed as an operating mode for 1FK7/1FT7 synchronous motors.		
Controller cycle	125 µs	125 µs			
Total rise time (without delay)	3.5 ms	2.3 ms			With encoderless operation in speed operating range 1:10, with encoder 50 rpm and above up to rated speed.
Characteristic angular frequency -3 dB	140 Hz	250 Hz			In this case, the dynamic response is determined primarily by the encoder system.
Speed ripple	See note	See note			Determined primarily by the total mass moment of inertia, the torque ripple and especially the mechanical configuration. It is therefore not possible to specify a generally applicable value.
Speed accuracy	≤ 0.001 % of n_{rated}	≤ 0.001 % of n_{rated}			Determined primarily by the resolution of the control deviation and encoder evaluation in the converter. This is implemented on a 32-bit basis for SINAMICS.
Induction motor	**1PH8 without encoder**	**1PH8 with incremental encoder 1024 S/R**	**1PH8 without encoder**	**1PH8 with incremental encoder 1024 S/R**	
Controller cycle	125 µs	125 µs	250 µs	250 µs	
Total rise time (without delay)	12 ms	5 ms	20 ms	10 ms	With encoderless operation in speed operating range 1:10, with encoder 50 rpm and above up to rated speed.
Characteristic angular frequency -3 dB	40 Hz	120 Hz	50 Hz	80 Hz	With encoderless operation in speed operating range 1:10. The dynamic response is enhanced by an encoder feedback. Servo with encoder is slightly more favorable than Vector with encoder, as the speed controller cycle with Servo is quicker.
Speed ripple	See note	See note	See note	See note	Determined primarily by the total mass moment of inertia, the torque ripple and especially the mechanical configuration. It is therefore not possible to specify a generally applicable value.
Speed accuracy	0.1 × f_{slip}	≤ 0.001 % of n_{rated}	0.05 × f_{slip}	≤ 0.001 % of n_{rated}	Without encoder: Determined primarily by the accuracy of the calculation model for the torque-producing current and rated slip of the induction motor (see table "Typical slip values"). With speed operating range 1:50 (Vector) or 1:10 (Servo) and with activated temperature evaluation.

[1)] R14DQ: Resolver 14 bit (resolution 16384, internally 2-pole).

© Siemens AG 2017

Configuration (continued)

Fundamental closed-loop control characteristics of SINAMICS S (continued)

- Blocksize, booksize compact, booksize and chassis, pulse frequency 4 kHz, position control

	Servo Control		**Vector Control**		Notes
Synchronous motor	**1FT7**	**1FK7**	Vector Control is not designed as an operating mode for 1FT7/1FK7 synchronous motors.		
Position controller cycle	1 ms	1 ms			
Resolution	4.19×10^6 incr./rev.	16384 incr./rev.			Correspondingly better with multi-pole resolver.
Achievable positioning accuracy in relation to the motor shaft	10^5 … 10^6 incr./rev.	4096 incr./rev.			In practice, the resolution must be higher than the required positioning accuracy by a factor of 4 to 10. These values are approximate nominal values only.
• In relation to the motor shaft, approx.	0.00072 °	0.1 °			
Induction motor	**1PH8 with AM22DQ [1)]**	**1PH8 with incremental encoder 1024 S/R**	**1PH8 with AM22DQ [1)]**	**1PH8 with incremental encoder 1024 S/R**	
Position controller cycle	1 ms	1 ms	2 ms	2 ms	
Resolution	4.19×10^6 incr./rev.	4096 incr./rev.	4.19×10^6 incr./rev.	4096 incr./rev.	
Attainable positioning accuracy	10^5 … 10^6 incr./rev.	1024 incr./rev.	10^5 … 10^6 incr./rev.	512 incr./rev.	In practice, the resolution must be higher than the required positioning accuracy by a factor of 4 to 10. These values are approximate nominal values only. Vector is less accurate than servo by a factor of approximately 2.
• In relation to the motor shaft, approx.	0.00072 °	0.35 °	0.00072 °	0.7 °	

[1)] AM22DQ: Absolute encoder 22 bit singleturn (resolution 4194304, encoder-internal 2048 S/R) + 12 bit multiturn (traversing range 4096 revolutions).

© Siemens AG 2017

Configuration (continued)

Fundamental closed-loop control characteristics of SINAMICS S (continued)

- Chassis format, pulse frequency 2 kHz, closed-loop torque control

	Servo Control		**Vector Control**		Notes
Synchronous motor	**1FT7 without encoder**	**1FT7 with AM22DQ [1)]**	Vector Control is not designed as an operating mode for 1FT7 synchronous motors.		
Controller cycle	250 µs	250 µs			
Total rise time (without delay)	–	1.2 ms			
Characteristic angular frequency -3 dB	–	400 Hz			In this case, the dynamic response is determined primarily by the encoder system.
Torque ripple	–	1.3 % of M_0			A ripple of < 1 % is possible with an absolute encoder ≤ 1 rpm. Not possible with resolver.
Torque accuracy	–	± 1.5 % of M_0			Measured value averaged over 3 s. With motor identification and friction compensation. In torque operating range up to ± M_0. Speed operating range 1:10 up to rated speed. Attention: External influences such as motor temperature can cause an additional long-time inaccuracy (constancy) of about ±2.5 %. Approx. ±1 % lower accuracy in field-weakening range.
Induction motor	**1PH8 without encoder**	**1PH8 with incremental encoder 1024 S/R**	**1PH8 without encoder**	**1PH8 with incremental encoder 1024 S/R**	
Controller cycle	250 µs	250 µs	250 µs	250 µs	
Total rise time (without delay)	–	1.6 ms	2.5 ms	1.6 ms	With encoderless operation in speed operating range 1:10, with encoder 50 rpm and above up to rated speed.
Characteristic angular frequency -3 dB	–	350 Hz	200 Hz	300 Hz	With encoderless operation in speed operating range 1:10. The dynamic response is improved when using an encoder (feedback signal).
Torque ripple	–	2 % of M_{rated}	2.5 % of M_{rated}	2 % of M_{rated}	With encoderless operation in speed operating range 1:20, with encoder 20 rpm and above up to rated speed.
Torque accuracy	–	± 3.5 % of M_{rated}	± 2 % of M_{rated}	± 1.5 % of M_{rated}	Measured value averaged over 3 s. With motor identification and friction compensation, temperature effects compensated by KTY84 and mass model. In torque operating range up to ± M_{rated}. Approx. additional inaccuracy of ± 2.5 % in field-weakening range. Servo: Speed operating range 1:10 referred to rated speed. Vector: Speed operating range 1:50 referred to rated speed.

[1)] AM22DQ: Absolute encoder 22 bit singleturn (resolution 4194304, encoder-internal 2048 S/R) + 12 bit multiturn (traversing range 4096 revolutions).

© Siemens AG 2017

Configuration (continued)

Fundamental closed-loop control characteristics of SINAMICS S (continued)

- Chassis format, pulse frequency 2 kHz, closed-loop speed control

	Servo Control		**Vector Control**		Notes
Synchronous motor	**1FT7 without encoder**	**1FT7 with AM22DQ [1)]**	Vector Control is not designed as an operating mode for 1FT7 synchronous motors.		
Controller cycle	250 µs	250 µs			
Total rise time (without delay)	–	5 ms			With encoderless operation in speed operating range 1:10, with encoder 50 rpm and above up to rated speed.
Characteristic angular frequency -3 dB	–	100 Hz			In this case, the dynamic response is determined primarily by the encoder system.
Speed ripple	–	See note			Determined primarily by the total mass moment of inertia, the torque ripple and especially the mechanical configuration. It is therefore not possible to specify a generally applicable value.
Speed accuracy	–	≤ 0.001 % of n_{rated}			Determined primarily by the resolution of the control deviation and encoder evaluation in the converter. This is implemented on a 32-bit basis for SINAMICS.
Induction motor	**1PH8 without encoder**	**1PH8 with incremental encoder 1024 S/R**	**1PH8 without encoder**	**1PH8 with incremental encoder 1024 S/R**	
Controller cycle	250 µs	250 µs	250 µs	250 µs	
Total rise time (without delay)	21 ms	8 ms	20 ms	12 ms	With encoderless operation in speed operating range 1:10, with encoder 50 rpm and above up to rated speed.
Characteristic angular frequency -3 dB	25 Hz	80 Hz	35 Hz	60 Hz	For encoderless operation in speed operating range 1:10. The dynamic response is improved when using an encoder (feedback signal). Servo with encoder is slightly more favorable than Vector with encoder, as the speed controller cycle with Servo is quicker.
Speed ripple	See note	See note	See note	See note	Determined primarily by the total mass moment of inertia, the torque ripple and especially the mechanical configuration. It is therefore not possible to specify a generally applicable value.
Speed accuracy	0.1 × f_{slip}	≤ 0.001 % of n_{rated}	0.05 × f_{slip}	≤ 0.001 % of n_{rated}	Without encoder: Determined primarily by the accuracy of the calculation model for the torque-generating current and rated slip of the induction motor (see table "Typical slip values"). For a speed operating range 1: 50 (Vector) or 1:10 (Servo) and with active temperature evaluation.

[1)] AM22DQ: Absolute encoder 22 bit singleturn (resolution 4194304, encoder-internal 2048 S/R) + 12 bit multiturn (traversing range 4096 revolutions).

© Siemens AG 2017

Configuration (continued)

Typical slip values for standard asynchronous motors (induction motors)

Motor output	Slip values	Notes
< 1 kW	6 % of n_{rated} e.g. motor with 1500 rpm: 90 rpm	The slip values of 1PH asynchronous motors are very similar to those of standard motors
< 10 kW	3 % of n_{rated} e.g. motor with 1500 rpm: 45 rpm	
< 30 kW	2 % of n_{rated} e.g. motor with 1500 rpm: 30 rpm	
< 100 kW	1 % of n_{rated} e.g. motor with 1500 rpm: 15 rpm	
> 500 kW	0.5 % of n_{rated} e.g. motor with 1500 rpm: 7.5 rpm	

CU320-2: Axis licensing according to performance expansion (firmware version 4.3 and higher)

The CU320-2 is licensed purely according to axis number. The expanded performance is essentially required with four or more servo axes, four or more vector axes and seven or more V/f axes, irrespective of computing capacity.

	Dynamic response (current controller clock cycle)	Number of axes without performance expansion	Number of axes with performance expansion	Note
Servo Control	62.5 µs	3	3	3 servo axes are possible with a cycle time of 62.5 µs. The performance expansion is therefore ineffective. From the 4th servo axis, irrespective of the computing capacity, the expanded performance is necessary.
	125 µs	3	6	
	250 µs	3	6	
Vector Control	250 µs	3	3	For 250 µs, 3 vector axes are possible. This means that the performance expansion is not active. From the 4th vector axis, irrespective of the computing capacity, the expanded performance is necessary.
	500 µs	3	6	
V/f control	250 µs	6	6	For 250 µs, 6 V/f axes are possible. This means that the performance expansion is not active. From the 7th V/f axis, irrespective of the computing capacity, the expanded performance is necessary.
	500 µs	6	12	
Mixed operation				
Servo Control plus V/f Control	125 µs/500 µs	3+0; 2+2; 1+4; 0+6	6+0; 5+2; 4+4; 3+6 2+8; 1+10; 0+12	Two V/f axes can be computed instead of a servo or vector axis.
Vector Control plus V/f Control	500 µs/500 µs	3+0; 2+2; 1+4; 0+6	6+0; 5+2; 4+4; 3+6 2+8; 1+10; 0+12	

CU320-2: Possible quantity structures, maximum configurations

In addition to the number of axes, for example, the following functions and hardware components also have an influence on the possible quantity structure (maximum configuration) of the CU320-2:

- Extended Safety
- EPos
- DCC
- CAN bus
- High-speed Terminal Modules (task = 250 µs)

The SIZER for Siemens Drives engineering tool can be used to very quickly perform reliability checks on more complex quantity structures.

© Siemens AG 2017

Configuration (continued)

Influencing variables on minimum required pulse frequency of power unit

Basic requirements such as maximum speed or necessary dynamic response of the control have a direct effect in determining the minimum pulse frequency of the power unit. If the minimum pulse frequency required exceeds the rated pulse frequency, derating must be implemented accordingly (see section SINAMICS S120 drive system).

The following table provides a general overview.

Influencing variables		**Minimum pulse frequency**	Notes
Servo Control, Vector Control (required max. output frequency/speed)	100 Hz correspond to: 3000 rpm for Z_p = 2 1500 rpm for Z_p = 4 428 rpm for Z_p = 14 352 rpm for Z_p = 17	1.25 kHz	Z_p is the number of pole pairs of the motor. This equals 2 on 1PH asynchronous motors (induction motors). 1FT7/1FK7 synchronous motors have between 3 and 5 pairs of poles. For torque motors, the numbers of pole pairs are typically 14 and 17. When edge modulation is used (only possible for asynchronous motors), the output frequency is increased by a factor of 2.
	160 Hz correspond to: 4800 rpm for Z_p = 2 2400 rpm for Z_p = 4 685 rpm for Z_p = 14 565 rpm for Z_p = 17	2 kHz	
	200 Hz correspond to: 6000 rpm for Z_p = 2 3000 rpm for Z_p = 4 856 rpm for Z_p = 14 704 rpm for Z_p = 17	2.5 kHz	
	300 Hz correspond to: 9000 rpm for Z_p = 2 4500 rpm for Z_p = 4 1284 rpm for Z_p = 14 1056 rpm for Z_p = 17	4 kHz	
	400 Hz correspond to: 12000 rpm for Z_p = 2 6000 rpm for Z_p = 4	4 kHz	Notice: For Servo Control with 1FT7/1FK7 motors only. Note field weakening requirements and suitable encoder system for higher speeds.
V/f control (required max. output frequency/speed)	100 Hz correspond to: 6000 rpm for Z_p = 1 3000 rpm for Z_p = 2	1.25 kHz	V/f Control is only intended for induction motors and SIEMOSYN motors. Z_p is the number of pole pairs of the motor. This is mainly between 1 and 4 on 1LA/1LG standard asynchronous motors (induction motors). SIEMOSYN motors have 1 or 2 pole pairs or, with larger shaft heights, 3 pairs.
	160 Hz correspond to: 9600 rpm for Z_p = 1 4800 rpm for Z_p = 2	2 kHz	
	200 Hz correspond to: 12000 rpm for Z_p = 1 6000 rpm for Z_p = 2	2.5 kHz	
	300 Hz correspond to: 18000 rpm for Z_p = 1 9000 rpm for Z_p = 2	4 kHz	
	400 Hz correspond to: 24000 rpm for Z_p = 1 12000 rpm for Z_p = 2	4 kHz	
Dynamic response requirement (current controller clock cycle)	125 µs 250 µs 400 µs 500 µs	4 kHz 2 kHz 2.5 kHz 1 kHz	Servo Control requires a minimum pulse frequency of 2 kHz.
Sine-wave filters	–	4 kHz	Notice: If sine-wave filters are operated at low pulse frequencies, resonance problems can occur and cause the filters to severely overheat.
Output reactor to motor	Max. frequency: 150 Hz correspond to 4500 rpm for Z_p = 2		The output reactor can be operated at minimum 2 kHz only.

© Siemens AG 2017

Configuration (continued)

Core topologies: Component cabling with DRIVE-CLiQ

The components communicate with one another via the standard DRIVE-CLiQ interface.

This couples a Control Unit with the power components, encoders and additional system components, for example Terminal Modules. Setpoints and actual values, control commands, status messages and rating plate data of the components is transferred via DRIVE-CLiQ.

Basic rules for wiring with DRIVE-CLiQ

The following rules apply when wiring components with DRIVE-CLiQ:

- A maximum of 14 nodes can be connected to a DRIVE-CLiQ socket on the CU320-2 Control Unit
- Up to 8 nodes can be connected in a line. A line is always seen from the perspective of the Control Unit
- A maximum of 6 Motor Modules can be operated in a line
- Ring wiring is not permitted
- Components must not be double-wired
- The motor encoder should be connected to the associated Motor Module
- Up to 9 encoders can be operated on one Control Unit
- A maximum of 8 Terminal Modules can be connected
- It is not permissible for the TM54F Terminal Module to be operated on the same DRIVE-CLiQ line as Motor Modules
- The Terminal Modules TM15, TM17 High Feature and TM41 have faster sampling cycles than the TM31 and TM54F. For this reason, the two groups of Terminal Modules must be connected in separate DRIVE-CLiQ lines.
- A DRIVE-CLiQ Hub DMC20/DME20 counts as two nodes

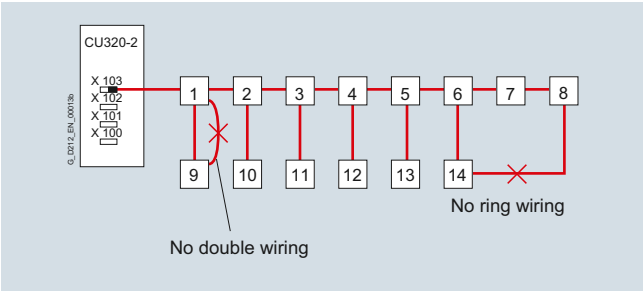

DRIVE-CLiQ configuration examples

There is a basic clock cycle within a DRIVE-CLiQ connection. For this reason, only combinations of modules with the same sampling cycle or integer-divisible sampling times can be operated on a DRIVE-CLiQ connection. To simplify the configuring process, it is advisable to supply the Line Module and Motor Modules via separate DRIVE-CLiQ connections.

The power components are supplied with the required DRIVE-CLiQ connecting cable for connection to the adjacent DRIVE-CLiQ node in the axis grouping (line topology). Prefabricated DRIVE-CLiQ cables in various lengths up to 100 m (328 ft) are available for connecting motor encoders, direct measuring encoders, Terminal Modules, etc.

The DRIVE-CLiQ cable connections inside the control cabinet must not exceed 70 m (230 ft) in length, e.g. connection between the CU320-2 Control Unit and the first Motor Module or between Motor Modules. The maximum permissible length of DRIVE-CLiQ MOTION-CONNECT cables to external components is 100 m (328 ft).

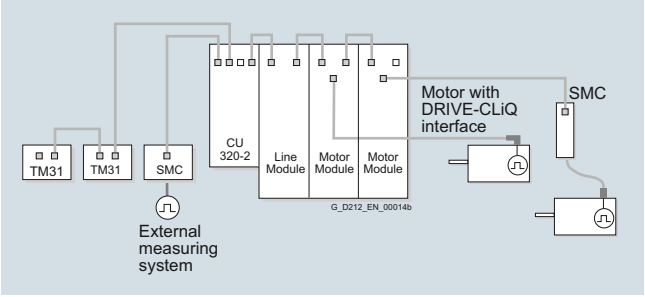

Example of a line topology for standard solutions

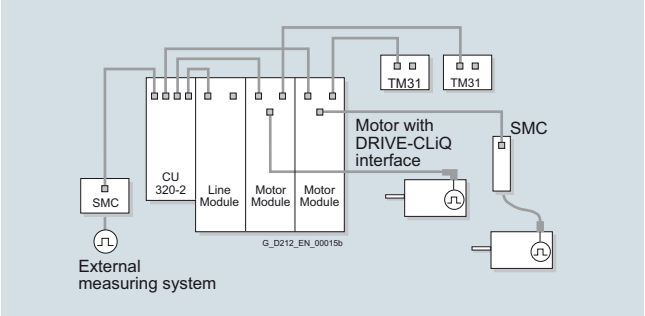

Example of a tree topology for high-performance solutions, e.g. high-speed axes in direct motion control group, selective access to individual axes/axis groupings for maintenance activities, etc.

© Siemens AG 2017

Configuration (continued)

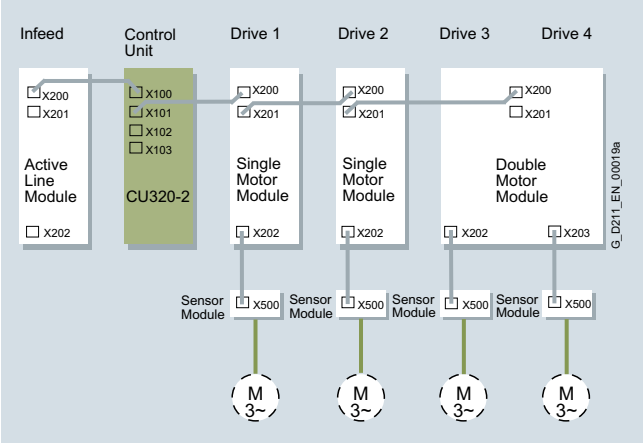

Preferred wiring of DRIVE-CLiQ connections illustrated using booksize format
Active Line Module as example: 250 µs current controller clock cycle
Motor Modules: 4 × vector control = current controller clock cycle 500 µs

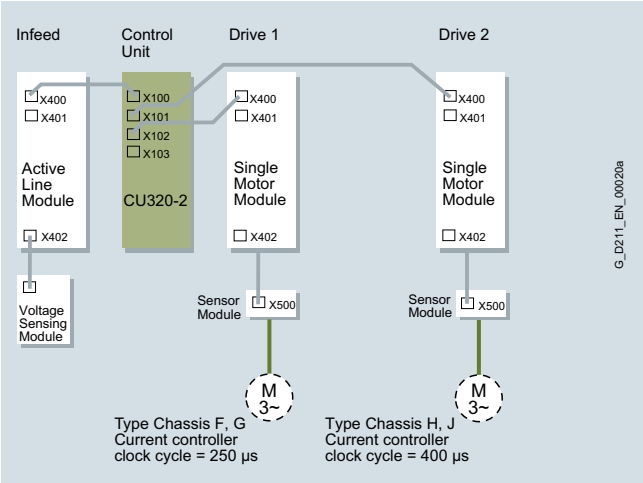

Wiring illustrated by example of chassis format with different current controller clock cycles

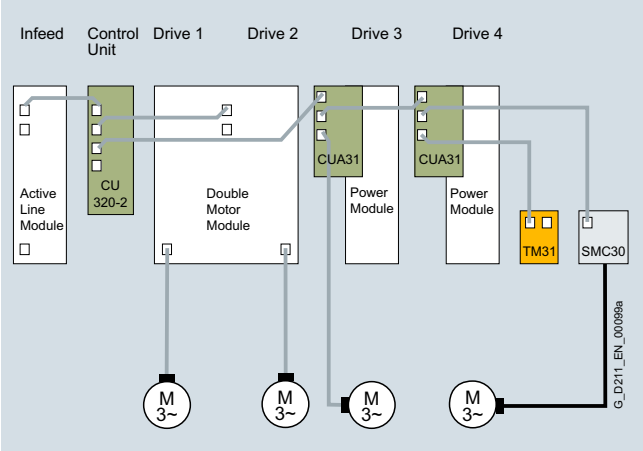

Example of wiring: Power Modules can also be operated on a CU320-2 when connected via a CUA31

© Siemens AG 2017

Configuration

Motor selection

The motor is selected on the basis of the required torque, which is defined by the application, e.g. drives for gantries, hoists, test stands, centrifuges, paper and rolling mill drives, feed drives and main spindle drives. Gear units for movement conversion or for adapting the motor speed and motor torque to the load conditions must also be considered.

As well as the load torque which is determined by the application, the following mechanical data are among those required to calculate the torque to be provided by the motor:

- Masses to be moved
- Diameter of the drive wheel/diameter
- Leadscrew pitch, gear ratios
- Frictional resistance data
- Mechanical efficiency
- Traversing paths
- Maximum velocity
- Maximum acceleration and maximum deceleration
- Cycle time

You must decide whether synchronous, induction or our especially energy-efficient synchronous-reluctance motors are to be used.

Synchronous motors should be selected for compact construction volume, low rotor moment of inertia and therefore maximum dynamic response.

Asynchronous motors (induction motors) can be used to increase maximum speeds in the field-weakening range. Asynchronous motors (induction motors) for higher powers are also available.

The following factors are of prime importance during configuration:

- The line supply configuration when using specific types of motor and/or line filters on IT systems (non-grounded systems)
- The ambient temperatures and the installation altitude of the motors and drive components

The motor-specific limiting characteristics provide the basis for defining the motors.

These define the torque or power characteristic with respect to speed and take into account the motor limits based on the DC link voltage of the Power Module or Motor Module. The DC link voltage in turn is dependent on the line voltage and, with multi-motor drives, on the type of Line Module.

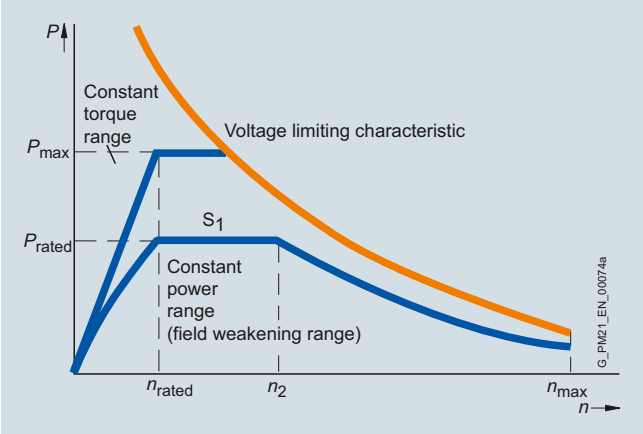

Typical speed/power graph for asynchronous (induction) motors

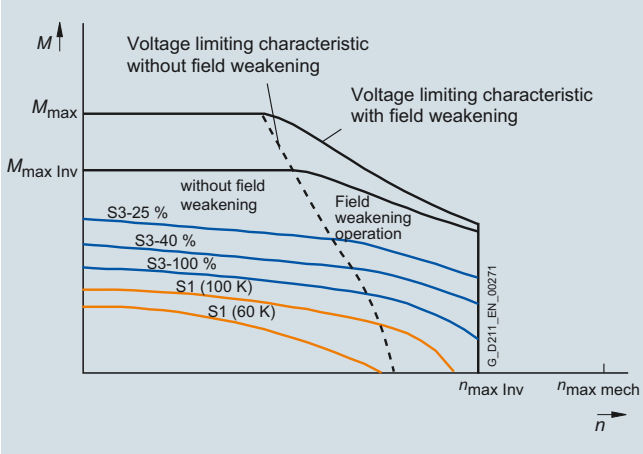

Torque characteristics of synchronous motors

For detail engineering information, please refer to the motor configuration manuals.

An updated overview of configuration manuals is available in a number of languages on the Internet at:
https://support.industry.siemens.com/cs/document/108993276

The SIZER for Siemens Drives engineering tool is available to assist you with configuring.

© Siemens AG 2017

Configuration

Overload capability

The power units of the Line Modules, Motor Modules and Power Modules are designed for brief overloads, i.e. the Modules are capable of supplying more than the rated current I_{rated} for short periods. In this instance, the thermal capacity of the heat sink is utilized, allowing for the relevant thermal time constants. The power semiconductors and actual current sensing circuit are rated for a maximum current I_{max} which must not be exceeded. The overload capability is determined by I_{max}, I_{rated} and the thermal time constants. A number of characteristic duty cycles are defined in the technical specifications for the power units. The SIZER for Siemens Drives engineering tool calculates the load on the basis of a specified duty cycle with optional time characteristic and then identifies the power unit which is required.

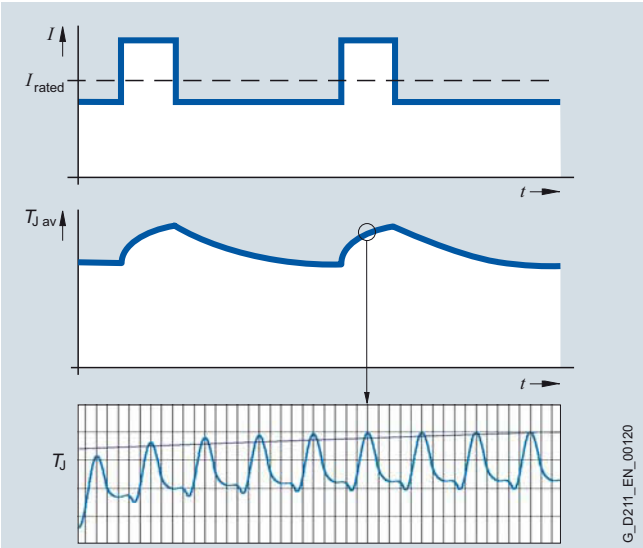

$T_{J\,av}$ average junction temperature of the power semiconductor
T_J junction temperature of the power semiconductor

The thermal time constant of a power semiconductor chip is typically within the range of 100 ms. With frequencies below 10 Hz, the overload capacity is therefore limited. The software takes account of these limitations by means of a thermal model and protects the devices against overload in all operating states. It must be noted, especially at frequencies around 0 Hz, that the specified rated current I_{rated} is the root-mean-square value of a sinusoidal current. If the frequency of the three-phase system is reduced to 0 Hz, a pure direct current flows in all phases at standstill. The root-mean-square value of this direct current can reach the peak value of the sinusoidal current depending on the phase relation.

The output current in this state is greater than the rated current I_{rated} by a factor of $\sqrt{2}$. The individual motor terminals and cables are designed thermically for the rated current in normal operation, so the devices are protected against this overload while taking account of the thermal time constant.

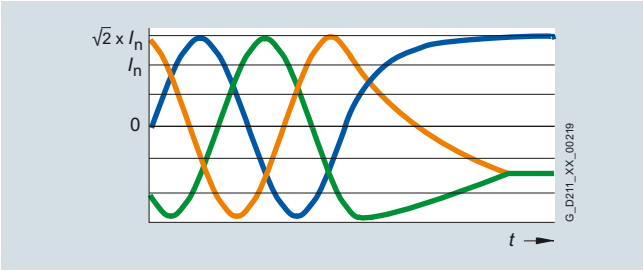

Derating characteristics

The power units can be operated with their rated current or power and the specified pulse frequency up to an ambient temperature of 40 °C (104 °F). The heat sink reaches the maximum permissible temperature at this operating point. If the ambient temperature increases above 40 °C (104 °F), the resulting heat loss must be reduced to prevent the heat sink from overheating.

At a given current, the heat loss increases in proportion to the pulse frequency. The rated output current I_{rated} must be reduced to ensure that the maximum heat loss or heat sink temperature for higher pulse frequencies is not exceeded. When the correction factor k_f for the pulse frequency is applied, the rated output current I_{ratedf} that is valid for the selected pulse frequency is adjusted.

When configuring a drive, please note that power units may not be capable of supplying the full current or power in the temperature range between 40 °C (104 °F) and 55 °C (131 °F). The power units measure the heat sink temperature and protect themselves against thermal overloading at temperatures > 40 °C (104 °F).

The air pressure, and therefore air density, drops at altitudes above sea level. At these altitudes, the same quantity of air does not have the same cooling effect and the air gap between two electrical conductors can only insulate a lower voltage. Typical air pressure values are:

0 m (0 ft) above sea level: 100 kPa

2000 m (6562 ft) above sea level: 80 kPa

3000 m (9843 ft) above sea level: 70 kPa

4000 m (13124 ft) above sea level: 62 kPa

5000 m (16405 ft) above sea level: 54 kPa

At installation altitudes above 2000 m (6562 ft), the line voltage must not exceed certain limits to ensure that surge voltages can be insulated in accordance with EN 60664-1 for surge voltage category III. If the line voltage is higher than this limit at installation altitudes > 2000 m (6562 ft), measures must be taken to reduce transient category III surge voltages to category II values, e.g. equipment must be supplied via an isolating transformer.

In order to calculate the permissible output current or power, the derating factors must be multiplied for the effects described above. The derating factor k_l for current as a function of installation altitude can be offset against the derating factor k_T for ambient temperature. If the result of multiplying derating factor k_T by derating factor k_l is greater than 1, then the calculation must be based on a rated current of I_{rated} or I_{ratedf}. If the result is < 1, then it must be multiplied by the rated current I_{rated} or I_{ratedf} to calculate the maximum permissible continuous current. The derating factor $k = k_f \times k_T \times k_l$ calculated by this method to obtain the total derating value must be applied to all current values in the specified duty cycles (I_{rated}, I_H, I_L).

The derating characteristic curves of Power Modules, Line Modules and Motor Modules can be found in the technical specifications of the relevant modules (see section SINAMICS S120 drive system).

© Siemens AG 2017

Configuration (continued)

Examples of derating characteristic curves and calculation of the permissible output current:

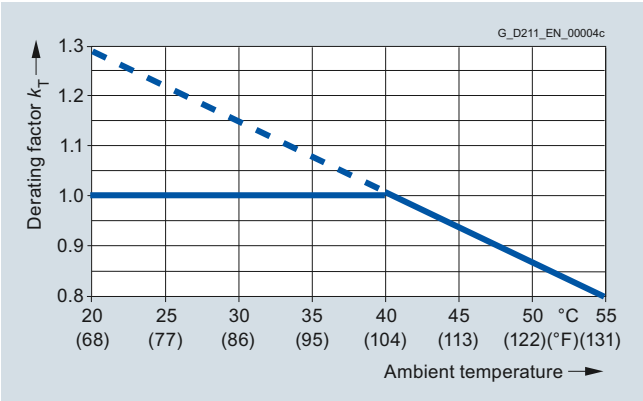

Current derating as a function of the ambient temperature

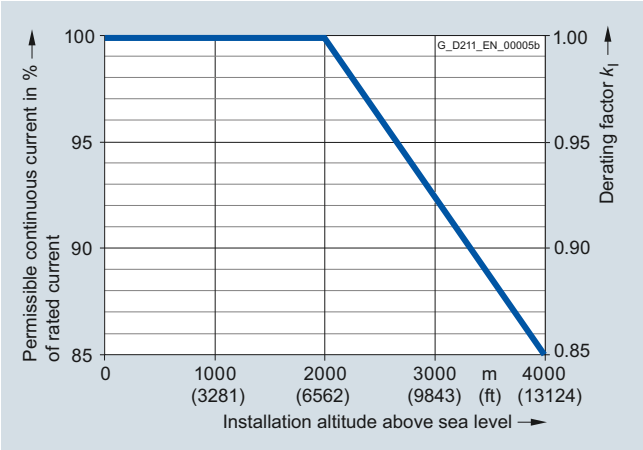

Current derating as a function of the installation altitude

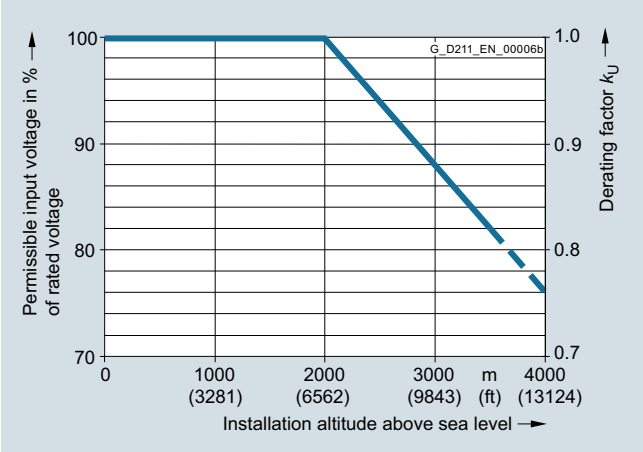

Voltage derating as a function of the installation altitude

Example 1

A drive system is to be operated at an altitude of 2500 m (8203 ft) at a maximum ambient temperature of 30 °C (86 °F) and rated pulse frequency.

Since the ambient temperature is below 40 °C (104 °F), a compensation calculation (installation altitude/ambient temperature) can be applied.

Installation altitude 2500 m (8203 ft): Derating factor $k_I = 0.965$, $k_U = 0.94$

Max. ambient temperature 30 °C (86 °F): Derating factor $k_T = 1.133$

$k_I \times k_T = 0.965 \times 1.133 = 1.093 \Rightarrow 1.0$ due to installation altitude/ambient temperature compensation

$k = k_f \times (k_I \times k_T) = 1.0 \times (1.0) = 1.0$

Result: Current derating is not required.

However, IEC 60664-1 stipulates that voltage derating is required.

The units in voltage range 380 V to 480 V can be operated up to a voltage of 480 V x 0.94 = 451 V, and the units in voltage range 660 V to 690 V up to 690 V × 0.94 = 648 V.

Example 2

When a drive line-up is configured, a Motor Module with Article No. 6SL3320-1TE32-1AA0 is selected (rated output current 210 A, base load current for high overload 178 A). The drive line-up is to be operated at an altitude of 3000 m (9843 ft) where ambient temperatures could reach 35 °C (95 °F) as a result of the installation conditions. The pulse frequency must be set to 4 kHz to provide the required dynamic response.

Installation altitude 3000 m (9843 ft): Derating factor $k_I = 0.925$, $k_U = 0.88$

Max. ambient temperature 35 °C (95 °F): Derating factor $k_T = 1.066$

$k_I \times k_T = 0.925 \times 1.066 = 0.987 \Rightarrow$ not fully compensated by installation altitude/ambient temperature

$k = k_f \times (k_I \times k_T) = 0.82 \times (0.925 \times 1.066) = 0.809$

Result: Current derating is required.

Where these boundary conditions apply,

- the max. permissible continuous current of the Motor Module is: 210 A × 0.809 = 170 A
- the base-load current for high overloading is: 178 A × 0.809 = 144 A

IEC 60664-1 stipulates that voltage derating is required.

The selected unit can be operated up to a voltage of 480 V 3 AC × 0.88 or 720 V DC× 0.88 = 422 V 3 AC or 634 V DC. This means that a 400 V induction motor can be operated without any restrictions. Due to the installation altitude, however, derating might be required for the asynchronous motor (induction motor).

© Siemens AG 2017

Configuration (continued)

Selection of the Power Module or Motor Module

The Motor Module is selected initially on the basis of standstill current $I_{0\ 100\ K}$ (rated current for winding temperature rise 100 K) for synchronous motors and the rated current I_{rated} for asynchronous motors (induction motors), and is specified in the motor description. Dynamic overloads, e.g. during acceleration, must be taken into account by duty cycles and may demand a more powerful Power Module or Motor Module. In this context, it is also important to remember that the output current of the Power Module or Motor Module decreases as a function of installation altitude, ambient temperature and pulse frequency setting (see explanations of derating characteristics).

For an optimum configuration, the rms motor current I_{load} calculated from the duty cycle is replicated on the Power Module or Motor Module. The following must apply:

$I_{rated,\ module} \geq I_{load}$

$I_{rated,\ module}$ = permissible continuous current of Power Module or Motor Module taking derating characteristic curves into account

The Power Modules or Motor Modules can be required to supply a higher output current for specific time periods. The characteristics or overload capability must be noted (see section SINAMICS S120 drive system) when modules are engineered for overload.

The SIZER for Siemens Drives engineering tool is capable of performing precise overload calculations.

Rated current – permissible and non-permissible motor/converter combinations

- Motor rated current higher than rated output current of the Power Module or Motor Module:
  In cases where a motor with a higher rated current than the rated output current of the Power Module or Motor Module is to be connected, the motor will only be able to operate under partial load. The following limit applies:
  The short-time current (= 1.5 × base-load current I_H) should be higher or equal to the rated current of the connected motor. Adhering to this dimensioning rule is important because the low leakage inductance of large motors causes current peaks which may result in drive system shutdown or in continuous output limiting by the internal protective electronic circuitry.
- Motor rated current significantly lower than rated output current of the Power Module or Motor Module:
  With the vector control system used, the rated motor current must equal at least 1/8 of the rated output current of the Power Module or Motor Module. With lower motor currents, the drive can be operated in V/f control mode.

Using pulse width modulation, the Power Modules or Motor Modules generate an AC voltage to feed the connected motor from the DC voltage of the DC link. The magnitude of the DC link voltage is determined by the line voltage and, in the case of a Motor Module, by the Line Module used and thus the maximum possible output voltage (see section SINAMICS S120 drive system). The speed and loading of the connected motor define the required motor voltage. The maximum possible output voltage must be greater than or equal to the required motor voltage; it may be necessary to select a motor with a different winding.

It is not possible to utilize all modes of pulse width modulation when a sine-wave filter is connected. The maximum possible output voltage (see sine-wave filter) is lower as a result.

© Siemens AG 2017

Configuration (continued)

Long motor cables

Using pulse width modulation, the Power Modules or Motor Modules generate an AC voltage to feed the connected motor from the DC voltage of the DC link. Capacitive leakage currents are generated in clocked operation and these limit the permissible length of the motor cable. The maximum permissible motor cable length is specified for each Power Module or Motor Module in the component description.

Motor reactors limit the rate of rise and magnitude of the capacitive leakage currents, thereby allowing longer motor cables to be used. The motor reactor and motor cable capacitance form an oscillating circuit which must not be stimulated by the pulse pattern of the output voltage. The resonant frequency of this oscillating circuit must therefore be significantly higher than the pulse frequency. The longer the motor cable, the higher the cable capacitance and the lower the resonant frequency. To provide a sufficient safety margin between this resonant frequency and the pulse frequency, the maximum possible motor cable length is limited, even when several motor reactors are connected in series. The maximum cable lengths in combination with motor reactors are specified in the technical specifications for the motor reactors.

Where a longer motor cable is required, a higher rating power unit must be selected or the permissible continuous output current $I_{continuous}$ must be reduced in relation to the rated output current I_{rated}.

Rated output current I_{rated}	**Length of the MOTION-CONNECT motor cable (shielded)**			
	> 50 … 100 m (164 … 328 ft)	> 100 … 150 m (328 … 492 ft)	> 150 … 200 m (492 … 656 ft)	> 200 m (656 ft)
Motor Module booksize format				
3 A/5 A	Use Motor Module 9 A	Use Motor Module 9 A	Not permissible	Not permissible
9 A	Use Motor Module 18 A	Use Motor Module 18 A	Not permissible	Not permissible
18 A	Use Motor Module 30 A or $I_{max} \leq 1.5 \times I_{rated}$ $I_{continuous} \leq 0.95 \times I_{rated}$	Use Motor Module 30 A	Not permissible	Not permissible
30 A	Always permissible	$I_{max} \leq 1.35 \times I_{rated}$ $I_{continuous} \leq 0.9 \times I_{rated}$	$I_{max} \leq 1.1 \times I_{rated}$ $I_{continuous} \leq 0.85 \times I_{rated}$	Not permissible
45 A/60 A	Always permissible	$I_{max} \leq 1.75 \times I_{rated}$ $I_{continuous} \leq 0.9 \times I_{rated}$	$I_{max} \leq 1.5 \times I_{rated}$ $I_{continuous} \leq 0.85 \times I_{rated}$	Not permissible
85 A/132 A	Always permissible	$I_{max} \leq 1.35 \times I_{rated}$ $I_{continuous} \leq 0.95 \times I_{rated}$	$I_{max} \leq 1.1 \times I_{rated}$ $I_{continuous} \leq 0.9 \times I_{rated}$	Not permissible
200 A	Always permissible	$I_{max} \leq 1.25 \times I_{rated}$ $I_{continuous} \leq 0.95 \times I_{rated}$	$I_{max} \leq 1.1 \times I_{rated}$ $I_{continuous} \leq 0.9 \times I_{rated}$	Not permissible
PM240-2 Power Module				
1.3 A 1.7 A 2.2 A 3.1 A 4.1 A	Not permissible	Not permissible	Not permissible	Not permissible
5.9 A 7.7 A	$I_{max} \leq 1.1 \times I_{rated}$ $I_{continuous} \leq 0.6 \times I_{rated}$	Not permissible	Not permissible	Not permissible
10.2 A	$I_{max} \leq 1.2 \times I_{rated}$ $I_{continuous} \leq 0.7 \times I_{rated}$	Not permissible	Not permissible	Not permissible
18 A	$I_{max} \leq 1.2 \times I_{rated}$ $I_{continuous} \leq 0.7 \times I_{rated}$	$I_{max} \leq 0.7 \times I_{rated}$ $I_{continuous} \leq 0.45 \times I_{rated}$	Not permissible	Not permissible
25 A 32 A	$I_{max} \leq 1.5 \times I_{rated}$ $I_{continuous} \leq 0.9 \times I_{rated}$	$I_{max} \leq 1.3 \times I_{rated}$ $I_{continuous} \leq 0.8 \times I_{rated}$	Not permissible	Not permissible
38 A 45 A 60 A	Always permissible	Always permissible	Always permissible	Not permissible
75 A 90 A	Always permissible	Always permissible	Always permissible	Not permissible
110 A 145 A 178 A	Always permissible	Always permissible	Always permissible	Not permissible from 145 A: 300 m (984 ft)

The permissible cable length for an unshielded motor cable is 150 % of the length for a shielded motor cable.

Motor reactors can be used for frame sizes FSA to FSC to allow longer motor cables to be used. Sine-wave filters are recommended for frame sizes FSD to FSF.

The maximum cable lengths are shorter in order to comply with EMC compatibility according to EN 61800-3. See section EMC notes.

© Siemens AG 2017

Configuration (continued)

Line Modules

In multi-axis drive applications, a number of Motor Modules are operated on a common DC link, which is supplied with power by a Line Module.

The first task is to decide whether a Basic Line Module, Smart Line Module or an Active Line Module will be used. On one hand, this depends on whether the drive must be capable of regenerative feedback into the line supply and, on the other hand, whether the line infeed is uncontrolled, and therefore dependent on the line supply voltage, or controlled to obtain a constant DC link voltage. For an uncontrolled infeed Basic Line Modules/ Smart Line Modules, line voltage changes can influence the output power of the Line Modules.

The chassis format units are available in the 380 V to 480 V voltage range, but also include units in the 500 V to 690 V range. Basic Line Modules are designed for infeed operation only. Active Line Modules have regulated infeeds which feature a step-up function.

In order to calculate the required DC link power and select the correct Line Module, it is important to analyse the entire operating sequence of the drive line-up connected to the DC link. Factors such as partial load, redundancies, duty cycles, coincidence factors and the operating mode (motor / generator mode) must be taken into account.

The DC link power P_d of a single Motor Module is calculated from the shaft output P_{mech} of the motor and the efficiency of the motor η_m and Motor Module η_{wr}.

The following applies in motor mode: $P_d = P_{mech} / (\eta_m \times \eta_{wr})$

The following applies in generator mode: $P_d = P_{mech} \times \eta_m \times \eta_{wr}$

The motor and generator outputs must be added with the corresponding sign in order to calculate the total DC link power. For the power calculation, the DC link voltage U_d can be assumed to be constant. Therefore, the required DC link current can be calculated as $I_d = P_d/U_d$

Basic Line Modules

The DC link voltage U_d of the Basic Line Modules is load-dependent. Under no-load conditions, the DC link is charged to the line voltage crest value U_L, i.e. $U_d = \sqrt{2} \times U_L$, e.g. U_d = 566 V when a 400 V supply system is connected.

Under load conditions, the DC link voltage reaches the average value of the rectified line voltage applied to the terminals. This mean value results from the line voltage times a factor of 1.35. Under full load, the voltage in the DC link is slightly less than the theoretical value due to the voltage drop across the line reactor and the line feeder cable. In practice, the range of the DC link voltage U_d is as follows:

$1.41 \times U_L > U_d > 1.32 \times U_L$ (no load → rated power)

Smart Line Modules

The DC link voltage U_d of Smart Line Modules is regulated to the average value of the rectified line voltage U_L, i.e. $U_d \approx 1.35 \times U_L$

Due to the voltage drop across the line reactor and in the line feeder cable, the DC link voltage decreases in motor operation and increases in generator operation. The DC link voltage U_d thus varies within the same range as on drives with a Basic Line Module:

$1.41 \times U_L > U_d > 1.32 \times U_L$ (rated power, generating → rated power, motoring)

Active Line Modules

The DC link voltage U_d is regulated to an adjustable value (Active Mode). An Active Line Module can also be switched to Smart Mode and then operates like a Smart Line Module. In Active Mode, the Active Line Module draws a virtually sinusoidal current from the supply system.

The rated infeed power of the Line Module refers to a line voltage of 380 V, 400 V or 690 V (690 V applies only to chassis format Line Modules).

Depending on the ambient conditions (installation altitude, ambient temperature), the rated infeed power of the Line Modules may need to be reduced (see section SINAMICS S120 drive system).

The coincidence factor takes into account the time characteristic of the torque for each individual axis.

On the basis of these principles, the following procedure can be used to dimension the Line Module:

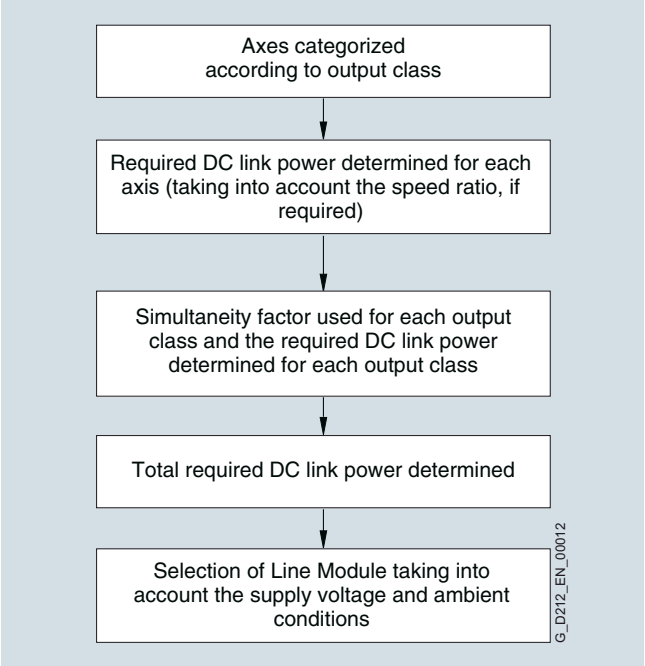

© Siemens AG 2017

Configuration (continued)

The following factors must also be taken into account when dimensioning the DC link:

Braking operation

As device losses are important in motor mode, the dimensioning for motor mode is also applicable to generator mode. With respect to motor braking operation, check that the energy fed back into the DC link does not exceed the permissible peak load capability of the Line Module.

In the case of higher regenerative outputs and to control the "line failure" operating scenario, a Braking Module must be provided, the Smart or Active Line Module must be overdimensioned or the regenerative output reduced by longer braking times.

For the configuration of the "EMERGENCY STOP" operating scenario, the Line Module must either be overdimensioned or an additional Braking Module must be used, so that the DC link energy can be dissipated as quickly as possible.

Checking the DC link capacitance

During power-up, the Line Modules limit the charging current for the DC link capacitors. Due to the limits imposed by the pre-charging circuit, it is essential to observe the maximum permissible DC link capacitance values for the drive line-up specified in the technical specifications.

Frequency with which the DC link is precharged

For chassis format Line Modules, the maximum permissible DC link pre-charging interval is 3 minutes.

Parallel connection of power units

Up to 4 Motor Modules or Line Modules in chassis format can be connected in parallel. Parallel connections can operate only in the Vector Control mode.

Parallel connections may only include Motor Modules or Line Modules of the same type and with the same voltage and output ratings. Mixtures of different modules, e.g. Basic Line Modules and Active Line Modules, cannot be connected in parallel. The CU320-2, SIMOTION D4x5-2 or CX32-2 Control Unit can control only one drive object of type "Parallel connection Line Modules" and one of type "Parallel connection Motor Modules". It is assumed that all Line Modules or Motor Modules linked to the Control Unit are connected in parallel. A Control Unit can control, for example, the following components:

- 1 Line Module + 2 parallel-connected Motor Modules
- 2 parallel-connected Line Modules + 3 parallel-connected Motor Modules

Combinations such as the following are not permissible:
2 Line Modules + 2 parallel-connected Motor Modules + 1 Motor Module

Further information can be found in the following Engineering Manual:
https://support.industry.siemens.com/cs/document/83180185

System disturbances

The voltage drops across the impedance between the supply system and a load as soon as the load draws current. In a symmetrical three-phase supply system, this is the network impedance Z_n which is calculated from the impedance Z_s of the supply system and the line-side impedance Z_e of the load.

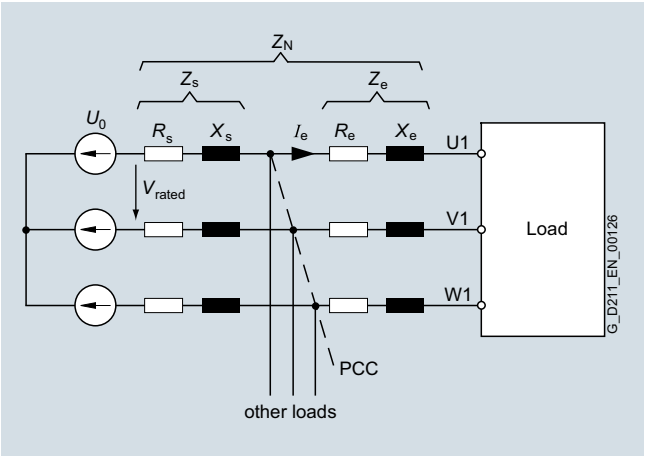

Effective impedances when a load is connected to a three-phase supply system

$Z_n = Z_s + Z_e = R_s + j\,X_s + R_e + j\,X_e = R_n + j\,X_n$

On a variable-speed drive, the line-side impedance Z_e is normally the total impedance provided by the line reactor and the feeder cable up to the PCC (Point of Common Coupling) for further loads. The ohmic component R_n is generally negligible as compared to the inductive component X_n. The inductance of an RI suppression filter is irrelevant for the purpose of this calculation, as this inductance is effective only for asymmetrical interference voltages, but not for a symmetrical line current.

If a load causes voltage drops across the impedance Z_s, this system disturbance has an impact at the PCC and thus also in the supply voltage to all other loads.

The voltage drop is proportional to current I_e and the impedance. To facilitate comparison of voltage drops under different supply and load conditions, the voltage drop is specified – normally at rated current – with reference to the phase voltage U_o. The calculation formula, e.g. for the per unit voltage drop u_k across an impedance Z is as follows:

$u_k = Z \times I_e / U_o$

© Siemens AG 2017

Configuration (continued)

Example 1:

A Power Module with rated line current I_e is directly connected to a low-voltage transformer and the PCC is the transformer connection terminal. The equation for the ratio between rated line current I_e of the Power Module and rated current I_{rated} of the transformer is $I_e = 0.25 \times I_{rated}$. The per unit voltage drop u_k of the 400 V transformer is 4 %. If the transformer is loaded with its rated current I_{rated}, the voltage drop across impedance Z_s is 9.2 V (corresponding to 4 % of the phase voltage U_o = 230 V).

$u_k = (Z_s \times I_{rated}) / 230\ V = 0.04$

The following formula applies to the rated line current I_e of the Power Module: $I_e = k \times I_{rated}$

The per unit voltage drop across the transformer when loaded with I_e is thus: $u_k = Z_s \times I_e / U_o = Z_s \times k \times I_{rated} / U_o$

With the specified ratio between I_e and I_{rated}, the per unit voltage drop is calculated as u_k = 1 % or 2.3 V. In relation to the Power Module, this transformer therefore functions like a line impedance in accordance with u_k = 1 %.

The magnitude of system disturbance in converter systems is assessed on the basis of short-circuit power ratio R_{sc}:

$R_{sc} = S_{cv} / P$

According to this definition in accordance with EN 60146-1, P is the fundamental-wave apparent power drawn by the converter. S_{cv} is the short-circuit power drawn from the mains in the event of a short-circuit on the terminals U1, V1, W1. Since the ohmic components of impedances are negligible in practice, $Z_n \approx j\ X_n$ applies

$S_{cv} \approx 3 \times U_o^2 / X_n$

and thus $R_{sc} \approx 3 \times U_o^2 / (X_n \times P)$

The short-circuit power ratio R_{sc} is therefore dependent on the current output power P of the converter and is determined by network impedance X_n.

If we assume the power to be $P \approx 3 \times U_o \times I_e = \sqrt{3} \times U_{rated} \times I_e$

the short-circuit power ratio R_{sc} is in inverse proportion to the per unit voltage drop u_k across the effective line impedance.

$R_{sc} \approx 3 \times U_o^2 / (X_n \times P) = 3 \times U_o^2 / (X_n \times 3 \times U_o \times I_e) = U_o / (X_n \times I_e) = 1 / u_k$

The short-circuit power ratio for example 1 is $R_{sc} \approx 100$ if no line reactor is installed (Z_e = 0).

Note:

The term "short-circuit power ratio" as used in technical standards is not a harmonized definition. The short-circuit power ratio R_{sce} defined according to IEC 61000-3-12 is calculated from the short-circuit power S_{SC} at the PCC referred to the power $S_{equ} = 3 \times U_o \times I_e$ consumed by the load.

Basic Line Modules and Power Modules are designed with a rectifier bridge on the line side. An inherent feature of the principle of rectification with load-side capacitance for DC link voltage smoothing are harmonics in the line current which result in a non-sinusoidal power input. The diagram shows the basic current waveform of a Power Module or Basic Line Module as a function of short-circuit power ratio R_{sc}.

Active Line Modules generate virtually no current harmonics (Active Mode) at all and are employed when system disturbance needs to be minimized, e.g. stipulation of IEEE 519 that THD (Total Harmonic Distortion) must be < 10 %.

The SIZER for Siemens Drives engineering tool calculates the line harmonic distortion on the basis of the supply data entered and lists them against the limit values of relevant standards.

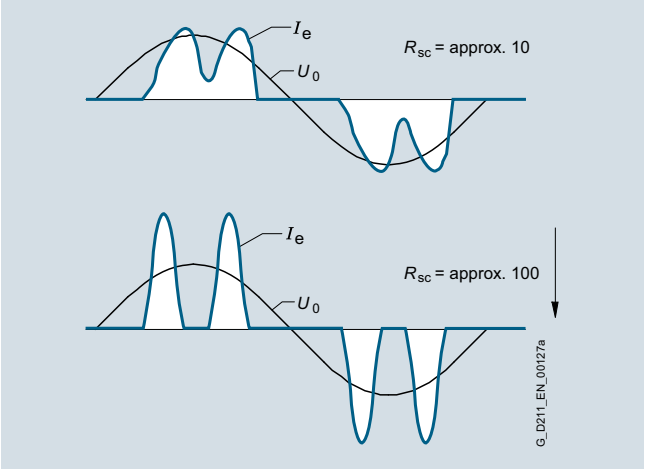

Line current of a Basic Line Module or Power Module as a function of the short-circuit power ratio R_{sc}

The rms of the line current I_e for which the line-side components must be rated comprises fundamental wave I_{e1} and the current harmonics, which increase in relation to the rise in short-circuit power ratio R_{sc}. If the DC link power P_d has been calculated (see Line Modules), the required line-side active power is a known quantity with Line Module efficiency, or the rectifier efficiency in the case of a Power Module. However, this active power is connected only with the current fundamental wave I_{e1}. The rms of the line current I_e is always greater than I_{e1} as a result of the current harmonics. The following applies for a short-circuit power ratio R_{sc} = 100:

$I_e \approx 1.3 \times I_{e1}$

The apparent power of a transformer selected to supply the drive must be greater than the drive power by a factor of about 1.3.

The harmonic currents produce only alternating power, but no active power. The following applies to the apparent power S on the line side:

$S^2 = P^2 + Q_1^2 + D^2$

- with active component
  $P = 3 \times U_o \times I_1 \times \cos \varphi_1$, which is solely produced by the current fundamental
- reactive component
  $Q_1 = 3 \times U_o \times I_1 \times \sin \varphi_1$
- and the distortion component

$$D = 3 \times U_0 \sqrt{\sum_{\nu}^{\infty} I_{\nu}}$$

The ratio between active power and apparent power is referred to as power factor λ or total power factor:

$$\lambda = \frac{P}{S} = \frac{P}{\sqrt{P^2 + Q_1^2 + D^2}}$$

© Siemens AG 2017

Configuration (continued)

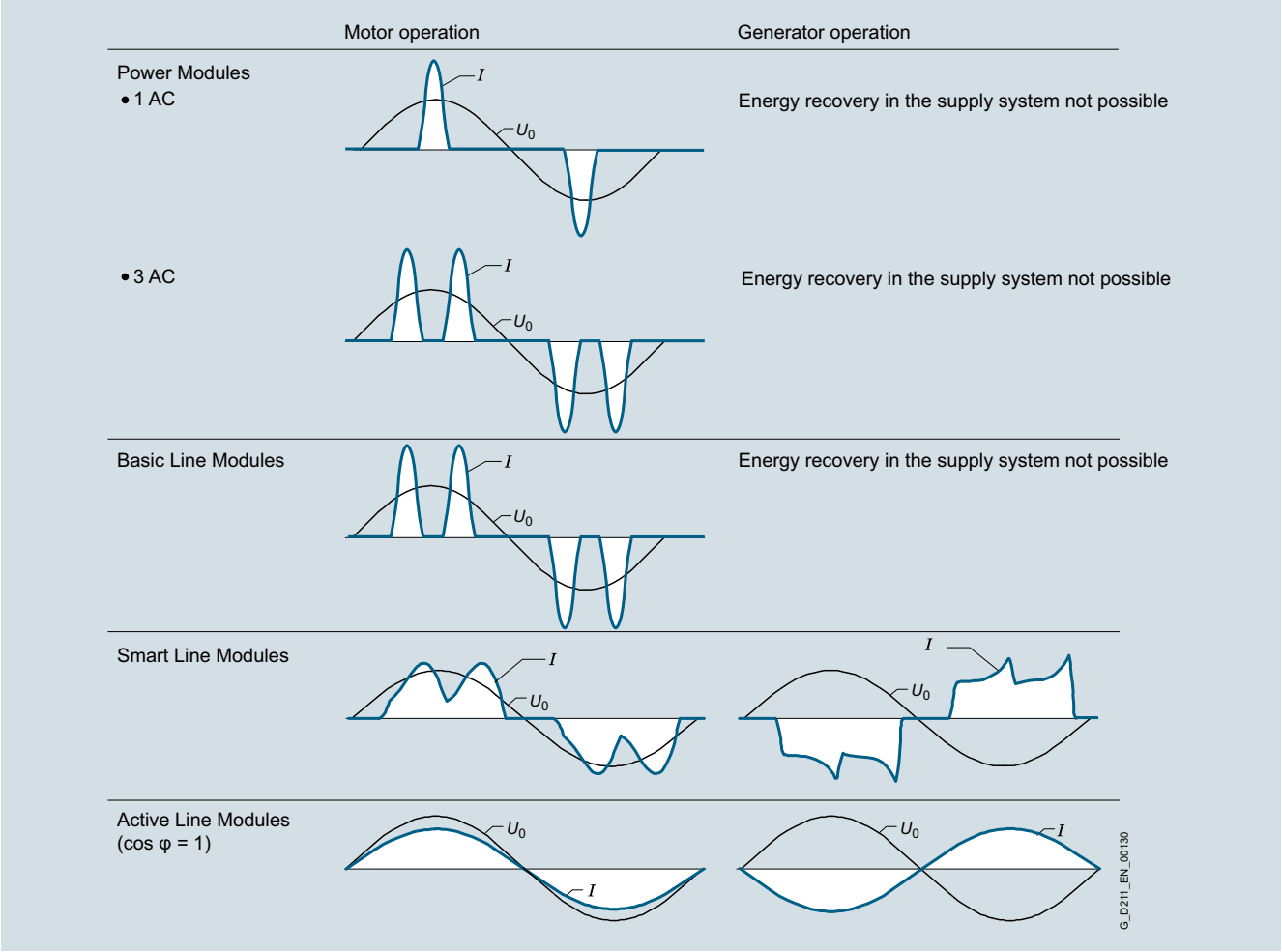

Typical waveform of the line current with Power Modules and Line Modules

© Siemens AG 2017

Configuration (continued)

Line-side power options (main switch, fuses, line filters, etc.)

The following line-side options are recommended for the drive configuration:

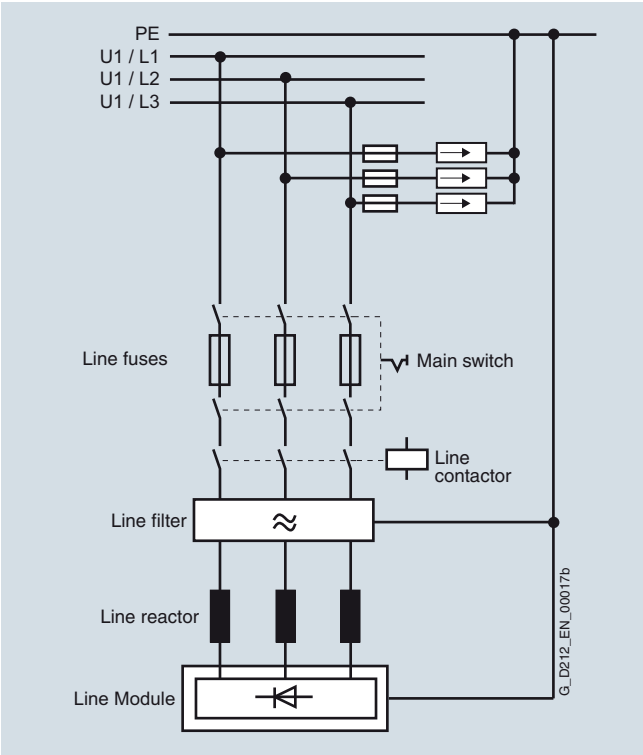

General overview of line infeed

The main switch may take various formats:

- Main and EMERGENCY STOP switch + fuse switch disconnector (with leading signal via auxiliary contact for trip mode)
- Load interruptor with fuses
- Circuit breaker

To protect the units against line-side surge voltages, it is advisable to install overvoltage protection directly at the infeed point (upcircuit of main switch). Surge protection is essential in order to satisfy the requirements of Canadian standard CSA C22.2 No. 14-05. For examples of suitable surge voltage arresters, go to
www.raycap.com or www.dehn-international.com

Depending on the power rating required, a fuse switch disconnector combined with a contactor or a circuit breaker can be used as the main switch.

A line contactor can be used, for example, if the drive has to be disconnected from the line supply in the event of a fault or for remote tripping. Follow the instructions in the SINAMICS S120 Configuration Guides to interlock the line contactor in the context of safety functions.

A line filter should be used on TN (grounded) systems to reduce system disturbance.

© Siemens AG 2017

Configuration

Motor reactors

High-speed switching of the power transistors causes capacitive recharging currents in the motor cable and motor, as well as steep voltage rises and peak voltages in the motor windings. These currents can be reduced by installing a motor reactor.

The voltage drop across the motor reactor is normally negligible at output frequencies of 60 Hz and below. The per unit voltage drop u_k across the reactor is between 1 % and 4 % at rated current and 50 Hz. With a cos φ of 0.86 and an output frequency of 50 Hz, the motor voltage is about 2 % lower (as a result of the motor reactor) than in systems without a motor reactor.

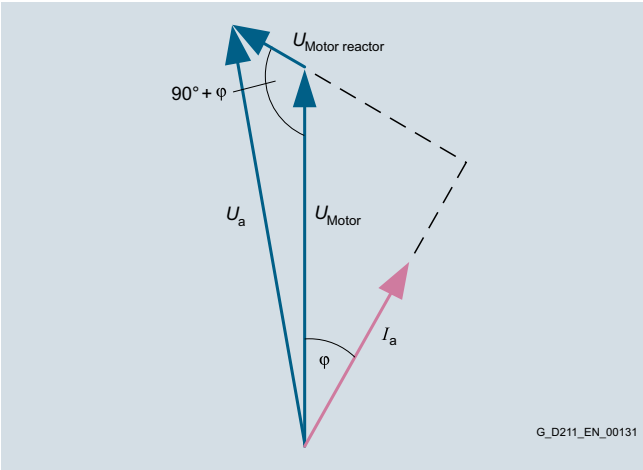

Phasor diagram of motor with motor reactor

Motor reactors are compatible with all modulation types (space vector modulation, edge modulation).

Sine-wave filters

Sine-wave filters are low-pass LC filters which only let through the fundamental component of the square-wave, pulse-width-modulation output voltage of a Power Module or Motor Module. The resonant frequency of the sine-wave filter must be significantly lower than the pulse frequency of the Power Module or Motor Module and be dimensioned with a sufficient margin to the maximum permissible output frequency. Sine-wave filters therefore define the choice of pulse frequency and place a limit on the maximum possible output frequency. This type of filter is compatible only with space vector modulation. The output voltage of a Power Module or Motor Module is thus limited to an output voltage (rms value) of approximately 0.67 x DC link voltage. With the voltage drop across the sine-wave filter, the maximum possible output voltage (rms value) is approximately 0.63 x DC link voltage. Parameters are used to register a sine-wave filter with the Control Unit. This ensures that all those values that are dependent on it, such as permissible modulation modes and maximum output frequency, are correctly preassigned.

Sine-wave filters can be used only in conjunction with Vector Control and V/f Control modes.

dv/dt filter plus VPL and dv/dt filter compact plus VPL

The dv/dt filter plus VPL and dv/dt filter compact plus VPL comprise two components, i.e. a dv/dt reactor and a voltage limiting network (Voltage Peak Limiter). As a consequence, the use of dv/dt filters plus VPL and dv/dt filters compact plus VPL represents a suitable method of reducing the voltage load on the motor winding for line supply voltages of 500 V to 690 V to such an extent that a special motor insulation is not required. The bearing currents are also significantly reduced. Using these filters therefore allows standard motors with standard insulation and without insulated bearings to be operated with SINAMICS converters up to line supply voltages of 690 V. This applies to both Siemens motors and third-party motors.

Sensor Modules

Signal conditioning for various encoders (incremental encoder sin/cos 1 V_{pp}, absolute encoder, resolver) takes place remotely, i.e. in the vicinity of the encoder, with customized Sensor Modules. Depending on the measuring system, SMC10, SMC20 or SMC30 Sensor Modules are used. The Sensor Modules are designed to be mounted on DIN rails. They are also used for the signal conditioning of external (machine) encoders.

Expansion modules

The CU320-2 Control Unit features interfaces and terminals for communication as standard. SINAMICS S120 offers the following expansion modules:

- TB30 Terminal Board (terminal expansion for plugging into the option slot on the CU320-2 Control Unit)
- TM31 Terminal Module (terminal expansion for connection via DRIVE-CLiQ)

The following criteria regarding the use of expansion modules must be taken into account:

- Only one option board can be plugged into the option slot on the CU320-2 Control Unit.
- A maximum of 8 Terminal Modules may be operated in a drive line-up.

Braking Modules and braking resistors

Braking units comprise a Braking Module and a braking resistor, which must be attached externally.

Braking units are used when

- regenerative energy occurs occasionally and briefly, for example when the drive brakes (EMERGENCY STOP) and the drive has no regenerative feedback capability
- the drive features regenerative feedback units but cannot return the energy fast enough to the supply on an "EMERGENCY STOP"
- the drive needs to be shut down after a power failure

The braking units for Power Modules in blocksize format consist of braking resistors only, as they feature a Braking Module as standard.

A number of Braking Modules can be connected in parallel to the DC link in order to increase the braking power. Each Braking Module requires its own braking resistor. It is not permissible to operate a mix of braking units in booksize and chassis format on the same DC link.

The braking power required is calculated from the DC link power P_d of the drive line-up or Power Module in generator operation.

© Siemens AG 2017

Configuration (continued)

Braking Modules and braking resistors for booksize format

To operate booksize format Braking Modules, a minimum capacitance is required in the DC link. This capacitance is determined by the braking resistor used.

Braking resistor 0.3 kW/25 kW → DC link capacitance 220 µF

Braking resistor 1.5 kW/100 kW → DC link capacitance 330 µF

The capacitance of the booksize format Braking Module of 110 µF is included in the total capacitance value. If the DC link capacitance is not sufficient for the use of one or more Braking Modules, a Capacitor Module can be added to increase the effective DC link capacitance of the drive line-up.

When booksize format Braking Modules are connected in parallel, the minimum capacitance specified above must be available for each Braking Module.

Note: Only booksize format modules that are directly connected to each other via the DC link busbar can be included in the total capacitance.

If the DC link capacitance is not sufficient for the operation of a number of Braking Modules, Capacitor Modules can be used to increase the DC link capacitance. The max. permissible DC link capacitance of a drive line-up on a Line Module must be taken into account. The max. DC link capacitances to be taken into account for pre-charging current limiting on the Line Modules are listed in the technical specifications for the Line Modules.

The braking resistor discharges the excess energy from the DC link:

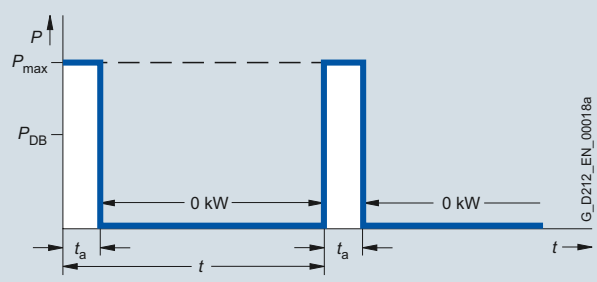

t	Period of braking duty cycle in s
t_a	Load duration in s
P_{DB}	Continuous power of braking resistor in kW
P_{max}	Peak power of braking resistor in kW

Duty cycle for braking resistors

Braking Modules and braking resistors for chassis format

Braking Modules with a braking power of 25 kW (for frame size FX) and 50 kW (for frame sizes GX, HX and JX) are available with matching braking resistors for chassis format units. Braking units can be connected in parallel to obtain higher braking powers. In this case, the units can be installed at the Line Module end or Motor Module end.

When a Braking Module is installed in a Basic Line Module of size GB/GD, the cables supplied for the DC link connection are too short. In this case, the cable harness set 6SL3366-2NG00-0AA0 must be ordered to make the Braking Module connection.

Frame size	**Rated power P_{DB} power**	**Peak power P_{15}**	**Max. possible mounting locations for Braking Module**
FB	25 kW	125 kW	1
GB/GD	50 kW	250 kW	1
FX	25 kW	125 kW	1
GX	50 kW	250 kW	1
HX	50 kW	250 kW	2
JX	50 kW	250 kW	3

The Braking Module features an electronics interface (X21) with monitoring function. The braking resistor housing contains a monitoring thermocontact. Both these monitors can be integrated into the warning or shutdown circuits of the drive system.

Calculation of Braking Module and braking resistor requirements

- For periodic duty cycles with a cycle duration of ≤ 90 s, the average value of the braking power within this duty cycle must be defined. The relevant cycle duration must be applied as the time base.
- For periodic duty cycles with a cycle duration of ≥ 90 s or for sporadic braking operations, a time interval of 90 s in which the highest average value occurs must be selected. The 90 s period must be applied as the time base.

Apart from the average braking power, the required peak braking power must also be taken into account when braking units are selected (Braking Module and braking resistor).

© Siemens AG 2017

Configuration (continued)

Basic data

Supply voltage	Power range Motor Modules	**Braking Module con-tinuous power P_{DB}**	**Braking Module power P_{40}**	**Braking Module power P_{20}**	**Braking Module peak power P_{15}**
380 … 480 V	110 … 132 kW	25 kW	50 kW	100 kW	125 kW
	160 … 800 kW	50 kW	100 kW	200 kW	250 kW
660 … 690 V	75 … 132 kW	25 kW	50 kW	100 kW	125 kW
	160 … 1200 kW	50 kW)	100 kW	200 kW	250 kW

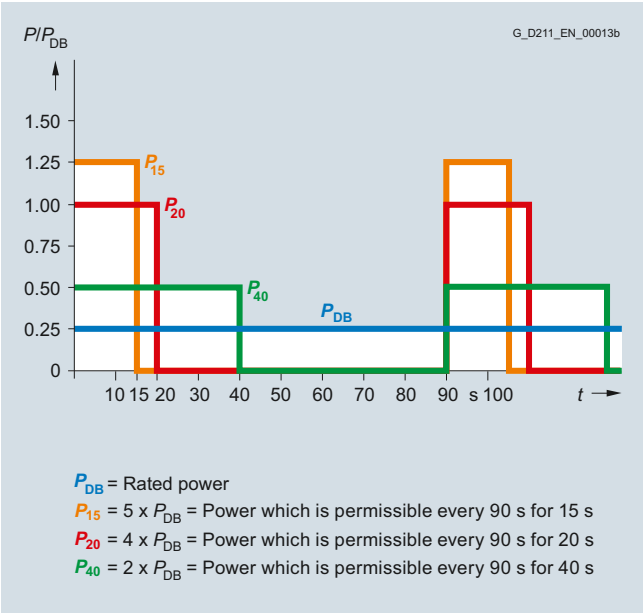

Load diagram

Braking resistors for Power Modules in blocksize format

The braking resistors for frame sizes FSA and FSB must be externally mounted. Braking resistors for frame sizes FSC to FSF should be mounted outside the control cabinet due to their high heat losses.

The Control Unit monitors the pulse/pause ratio (ON time/OFF time) of the braking resistor and shuts it down on faults if it calculates that the resistor could overheat.

Braking resistors feature a temperature switch with NC contacts that open when the permissible temperature is exceeded. The temperature switch must be evaluated to prevent consequential damage if the braking resistor overheats.

The braking power P_{mech} on the motor shaft is higher than the power loss of the braking resistor, as this only needs to convert the DC link energy into heat. The DC link power P_d of the Power Module in generator mode is calculated from the shaft power P_{mech} of the motor and the power loss in the motor $P_{v\ Motor}$ and in the Power Module $P_{v\ Power\ Module}$ as:

$P_d = P_{mech} - P_{v\ Motor} - P_{v\ Power\ Module} = P_{braking\ resistor}$

The power losses can be estimated from the efficiency values of the motor η_m and Power Module η_{wr}:

$P_{braking\ resistor} = P_d = P_{mech} \times \eta_m \times \eta_{wr}$

Booksize format Capacitor Module

The Capacitor Module functions as a short-term energy buffer, e.g. for bridging brief power failures or for storing braking energy. The buffered energy W can be calculated with the following formula:

$W = ½ \times C \times (U_{d1}^2 - U_{d2}^2)$

C = effective capacity of Capacitor Module 4 mF

U_{d1} = DC link voltage when buffering starts

U_{d2} = DC link voltage when buffering ends

Example:

U_{d1} = 600 V; U_{d2} = 430 V

The resultant energy calculation is W = 350 Ws

With this energy, for example, it is possible to buffer a Motor Module with 3 kW load for about 100 ms.

Booksize format Control Supply Module

The Control Supply Module provides a 24 V DC power supply via the line or DC link in order to maintain the electronics power supply for the components in the event of a line failure. This makes it possible, for example, to make emergency retraction movements in the event of the failure of the line supply.

© Siemens AG 2017

Configuration (continued)

External 24 V DC supply of components

Power units (Line Modules and Motor Modules) and other system components must be provided with a 24 V DC voltage via an electronics power supply made available externally.

SITOP devices, which are available as a modular solution, are provided as the external 24 V DC electronic power supply.

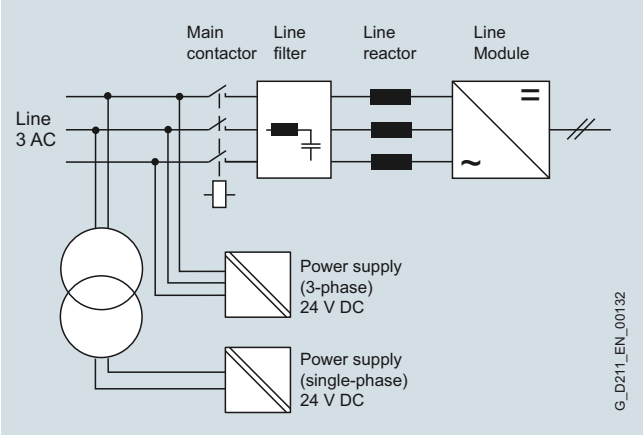

Connecting the external electronics power supply

The current requirement $I_{DC\ ext}$ is calculated using the following formula:

Σ [Control Unit + built-in options (e.g. TB30 + CBC10) + system components + Line Module + Σ (Motor Modules + SMCxx + motor brake control)]

The other system components (e.g. line contactor) must also be taken into account.

The current requirement of individual components can be found in the relevant technical specifications.

Limit values when configuring the system:

- The current-carrying capacity of the integrated 24 V DC busbar (featured only in booksize format) is max. 20 A.
- In the event of higher current requirements, a number of 24 V DC power supplies must be provided in one drive line-up. The other infeeds are implemented by means of 24 V terminal adapters (booksize format only).
- Cable cross sections of up to 2.5 mm² may be connected to the Control Units, Terminal Boards, Terminal Modules and Sensor Modules.
- Cable cross sections of up to 6 mm² may be connected to the 24 V terminal adapters (booksize format only) for the Line Modules and Motor Modules.
- The external 24 V DC power supply should only be used for the SINAMICS components and the direct loads.

Capacitors in the electronics supply of most components must be charged when the 24 V DC supply is first switched on. To charge these capacitors, the power supply must first supply a current peak which can be a multiple of the current requirement $I_{DC\ ext}$ calculated above. Allowance must be made for this current peak when selecting protective elements, e.g. miniature circuit breakers, for incorporation in the 24 V DC supply system (types with let-through I^2t values according to characteristic D). The current peak flows for an interval t_e of less than 100 ms. The crest value is determined by the impedance of the 24 V DC supply and its electronically limited maximum current.

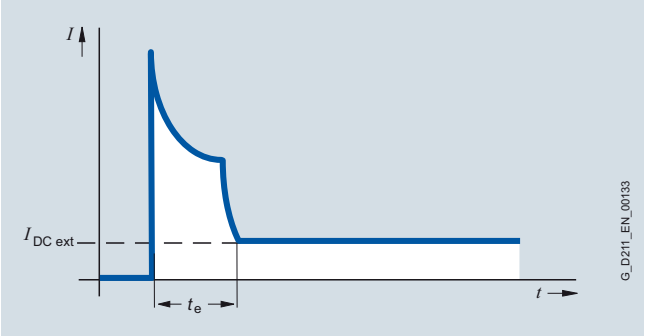

Typical waveform of the switch-on current of the external 24 V DC supply

© Siemens AG 2017

Configuration

Specification of components for connection system

To complete the drive system, components such as motors and encoders must be connected to it via cables.

For motors with DRIVE-CLiQ interface, the DRIVE-CLiQ cables carry the 24 V DC power supply. On all other Sensor Modules, a separate 24 V DC power supply must be provided.

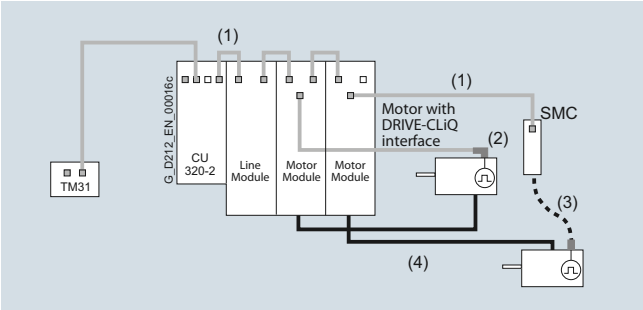

Drive connection system

Legend	Cable	Description
(1)	DRIVE-CLiQ cables	Standard cables for cabinet-internal configuration without 24 V cores
(2)	DRIVE-CLiQ MOTION-CONNECT 500/800 cables	Shielded cables with 24 V cores MOTION-CONNECT 500 for fixed installation (e.g. in a cable channel) and MOTION-CONNECT 800 for flexible installation (e.g. in cable carriers)
(3)	MOTION-CONNECT 500/800 signal cables	Suitable for the relevant measuring system; in versions MOTION-CONNECT 500 for fixed installation (e.g. in a cable channel) and MOTION-CONNECT 800 for flexible installation (e.g. in cable carriers)
(4)	MOTION-CONNECT 500/800 power cables	Shielded motor cables MOTION-CONNECT 500 for fixed installation (e.g. in a cable channel) and MOTION-CONNECT 800 for flexible installation (e.g. in cable carriers)

DRIVE-CLiQ cables are available in different versions and lengths (see section MOTION-CONNECT connection systems).

The required bending radii apply particularly to short cables. In addition to the distance between the two DRIVE-CLiQ sockets that the cable is to connect, a cable length of at least 60 mm (2.36 in) must be added to allow for bending radii. When defining lengths of prefabricated cables, see section MOTION-CONNECT connection systems.

Unused DRIVE-CLiQ sockets can be sealed with a blanking plug to prevent the ingress of contaminants. Suitable blanking plugs are supplied in the accessories pack for the units.

Mechanical configuration of the drive

A SINAMICS S drive line-up comprises a Line Module, Motor Modules, DC link components, a Control Unit, and the optional expansion modules.

Configuration of a drive line-up in booksize format

The following criteria must be taken into account when a drive line-up of booksize format units is configured:

- The Smart Line Modules 5 kW and 10 kW must always be arranged on the left as the first module. All other Line Modules should be arranged on the left as the first module. The CU320-2 Control Unit in this case can be "snapped onto" the left-hand side of the Line Module.
- The DC link busbars can be connected on the right and left with Basic Line Modules, Active Line Modules and Smart Line Modules rated 16 kW and larger. In this case, the modules can be arranged in reverse order (from right to left) or on both sides (see arrangement for units in chassis format).
- Only one Line Module is permitted in each drive line-up.
- A number of drive line-ups must be configured for power supplies which cannot be provided by the highest rating.
- The Motor Modules must be arranged beside the Line Module in descending order of the rated currents, that is, the Motor Module with the highest rated current is to be mounted immediately adjacent to the Line Module, and the Motor Module with the lowest rated current is positioned furthest away from the Line Module.
- DC link busbars are integrated in the Line Modules, Motor Modules, Braking Modules, Capacitor Modules and Control Supply Modules so that the modules can be connected to the drive line-up. The current carrying capacity of the integrated DC link busbars is determined by the module rating and is either 100 A or 200 A (see technical specifications). It must be ensured that the DC link busbars have the required current carrying capacity at every point within the drive line-up. When high-output Motor Modules (DC link busbars 200 A) and low-output Motor Modules (DC link busbars 100 A) are used, for example, the Braking Module (DC link busbars 100 A) must be installed downstream of the high-output Motor Modules.
- DC link adapters can be used to implement multi-tier configurations.
- The drive line-ups should be configured such that the total length of all power cables for the motor cables and the line cable, which should preferably be shielded, in each individual line-up does not exceed the permissible total cable length.

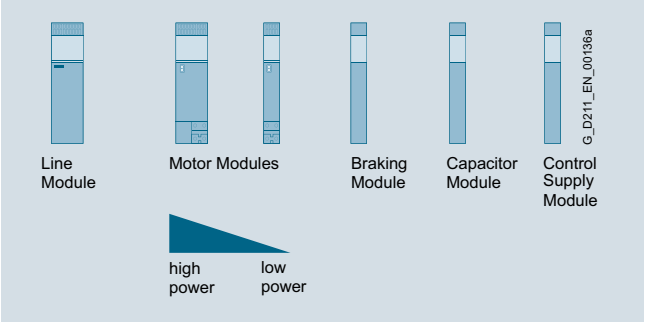

Power-oriented arrangement of booksize format Motor Modules

- The Control Unit configuration is flexible. The following configuration options are possible:
  - "Docking" on the left-hand side of the Line Module
  - Direct mounting next to the drive line-up on a mounting plate
  - Mounting in other cabinet panels taking into account the permissible DRIVE-CLiQ cable lengths

© Siemens AG 2017

Configuration (continued)

Configuration of a drive line-up in chassis format

- The Motor Modules must be positioned to the left or right of the Line Module with decreasing rated currents (i.e. the Motor Module with the highest rated current is positioned next to the Line Module, while the Motor Module with the lowest rated current is at the end on the left or right). You must ensure that the cables/busbars for the DC link meet the current-carrying capacity requirements for all connected Motor Modules.
- The inductance of the DC link busbars must be low, achieved, for example, by arranging the bars as close as possible in parallel, but observing the required creepage distances and air gaps.
- The Control Unit configuration is flexible. The following configuration options are possible:
  - "Docking" on the left-hand side of the Line Module
  - Direct mounting next to the drive line-up on a mounting plate
  - Mounting in other cabinet panels taking into account the permissible DRIVE-CLiQ cable lengths

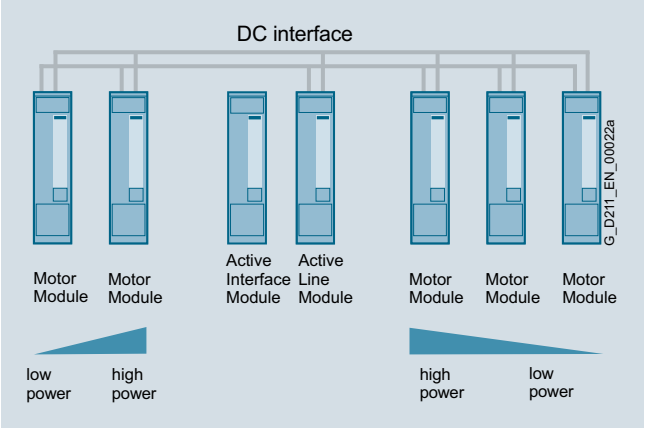

Configuration of a mixed drive line-up in chassis and booksize formats

A mixed drive line-up must be configured according to the rules for chassis format units. The Motor Modules in booksize format can be connected to the higher-level DC link busbars by means of DC link rectifier adapters. There are two possible connection options - A and B. With A, each Motor Module in booksize format is connected using the appropriate DC link rectifier adapter. With B, Motor Modules in booksize format are connected to one another and the internal DC link busbars and a DC link rectifier adapter are used on the last Motor Module to make the connection to the higher-level DC link busbars. In the latter case, the DC link rectifier adapter must be attached to the last Motor Module on the right-hand side of the line. As regards the arrangement of modules with different current ratings, the guidelines specified under "Configuration of a drive line-up in booksize format" also apply to mixed drive line-ups.

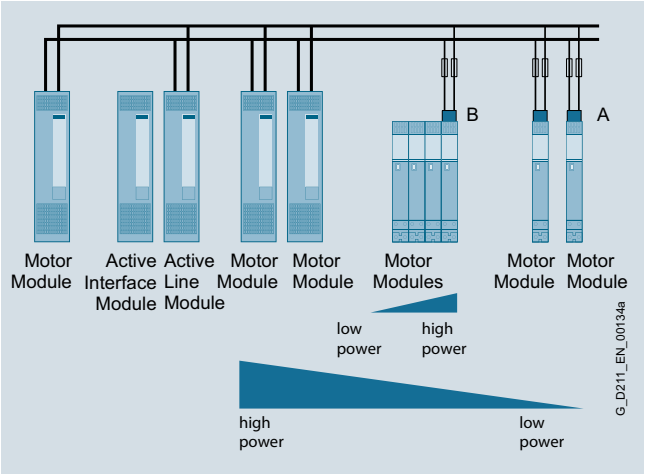

Ideally, the entire length of the higher-level DC link busbars can be dimensioned for the rated DC link current of the Line Module. The busbars are then protected by the line fuses at the infeed end.

If the cross section of the DC link busbars or cabling is reduced, this branch must be designed to be short-circuit-proof. The current limiting mechanism of the Motor Modules connected to the branch with reduced cross section then protects it against overloading. It is not advisable to reduce busbars or cables down to the mandatory minimum cross section. No additional overload protection (fuse) is required on the assumption that overloading cannot occur as a result of cable damage on the cable route to the Motor Module and that the circuit branch is protected against overloading by the Motor Module.

Where the cross section has been significantly reduced, or the circuit design is not inherently short-circuit-proof, a branch fuse must be installed at the beginning of the section with reduced cross section in order to protect the DC link connections involved. In the event of a fault, the fuse must be capable of interrupting DC fault currents; other types of miniature circuit breaker are not suitable.

Allocation of branch fuses for option (A) in a supply system with grounded neutral (TN system). The calculations are based on the assumption that $\tau = L/R < 10$ ms applies to the time constant τ in the DC fault circuit and that the fault current is interrupted by the fuse after maximum 1 s.

© Siemens AG 2017

Configuration (continued)

Motor Module booksize format I_{rated}	Recommended cable cross-section for Cu conductors and PVC insulation with a permissible operating temperature of 70 °C (158°F) on the conductor	**DC link rectifier adapter**	**LV HRC fuse**		
				with knife contacts	with screw contacts
A	mm²	Article No.	A	Article No.	Article No.
3	2.5	**6SL3162-2BD00-0AA0**	16	**3NE8015-1**	**3NE8715-1**
5	2.5		16	**3NE8015-1**	**3NE8715-1**
9	4		35	**3NE8017-1**	**3NE8717-1**
18	10		63	**3NE8018-1**	**3NE8718-1**
30	10		80	**3NE8020-1**	**3NE8720-1**
45	35	**6SL3162-2BM00-0AA0**	125	**3NE8022-1**	**3NE8722-1**
60	70		160	**3NE8024-1**	**3NE8724-1**
85	95		200	**3NE3227**	**3NE8727-1**
132	95		315	**3NE3230-0B**	**3NE8731-1**
200	95		400	**3NE3230-0B**	**3NE8731-1**
2 × 3	2.5	**6SL3162-2BD00-0AA0**	20	**3NE8015-1**	**3NE8715-1**
2 × 5	4		35	**3NE8017-1**	**3NE8717-1**
2 × 9	10		63	**3NE8018-1**	**3NE8718-1**
2 × 18	10		125	**3NE8022-1**	**3NE8722-1**

© Siemens AG 2017

Configuration

Mandatory minimum installation clearances

Ventilation clearances for Sensor Modules and Terminal Modules

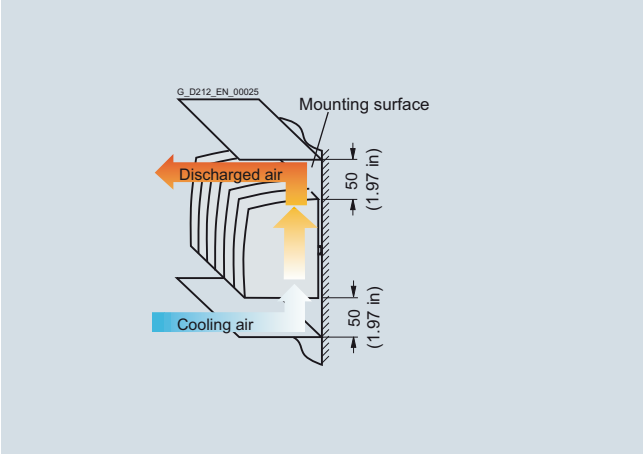

Sensor Modules and Terminal Modules can be mounted directly adjacent to one another.

When mounted on the wall, line reactors and line filters require a ventilation space of 100 mm (3.94 in) above and below respectively.

Ventilation clearances for blocksize format components

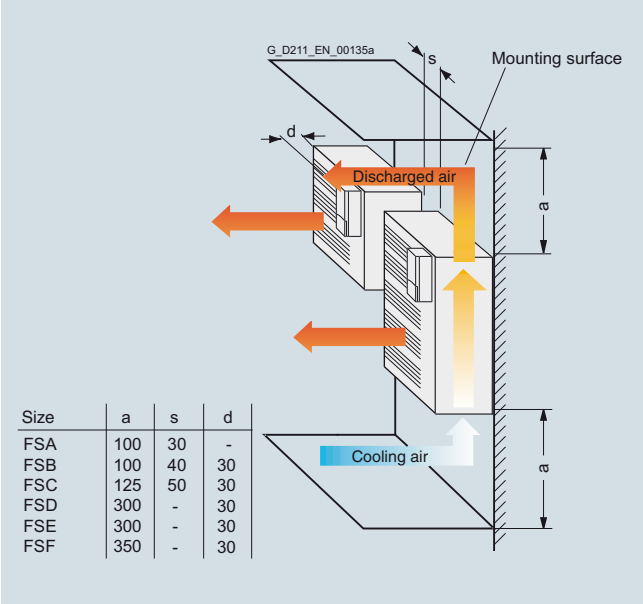

Size	a	s	d
FSA	100	30	-
FSB	100	40	30
FSC	125	50	30
FSD	300	-	30
FSE	300	-	30
FSF	350	-	30

PM240-2 Power Modules can be mounted side by side up to an ambient temperature of 40 °C (55 °F). A clearance of 30 mm (1.18 in) must be provided at the front and to the left of the mounted Control Unit or Control Unit Adapter for frame sizes FSB to FSF.

Ventilation clearances for booksize format components

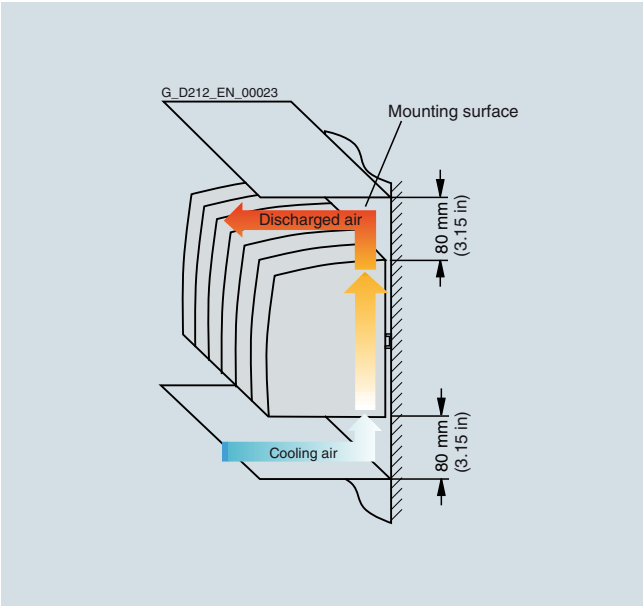

Line Modules 5 kW up to 55 kW
Active Interface Modules
Motor Modules up to 85 A

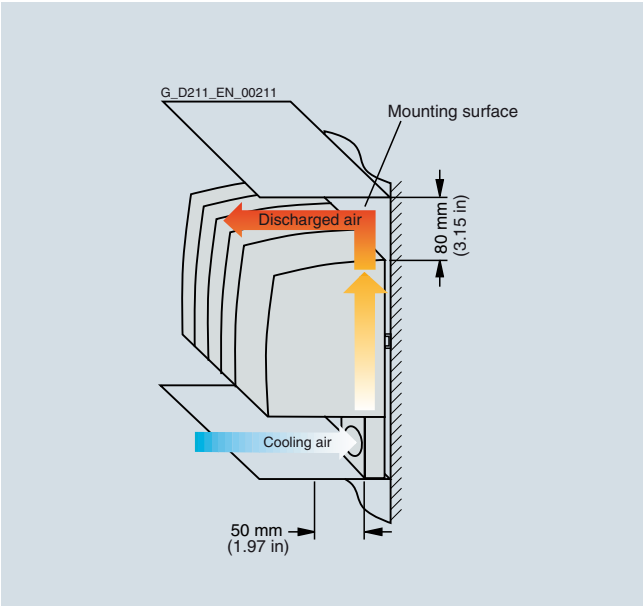

Active Line Modules 80 kW and 120 kW
Motor Modules 132 A and 200 A

© Siemens AG 2017

Configuration (continued)

Ventilation clearances for chassis format components

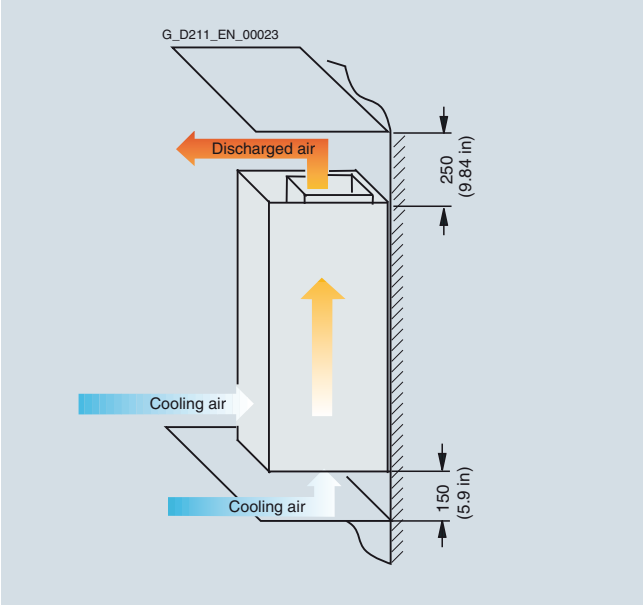

Basic Line Modules

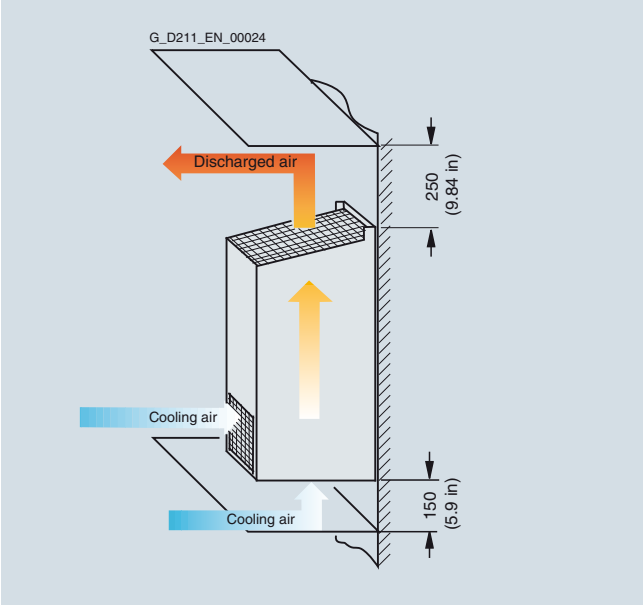

Active Interface Modules in frame sizes FI and GI

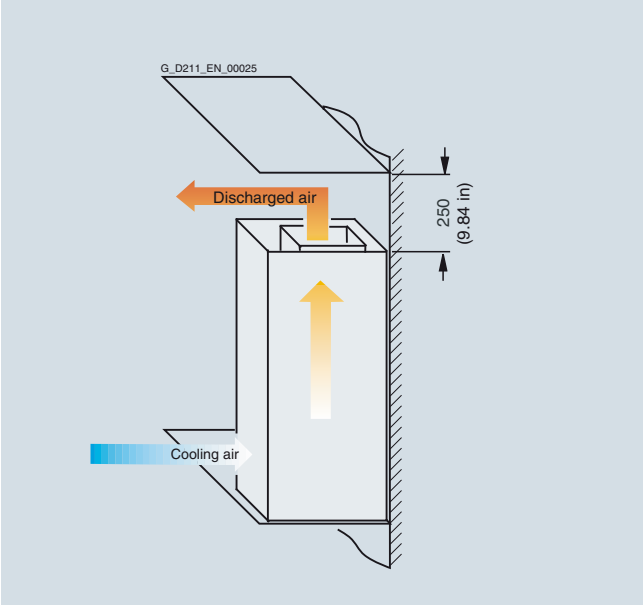

Active Interface Modules in frame sizes HI and JI

© Siemens AG 2017

Configuration (continued)

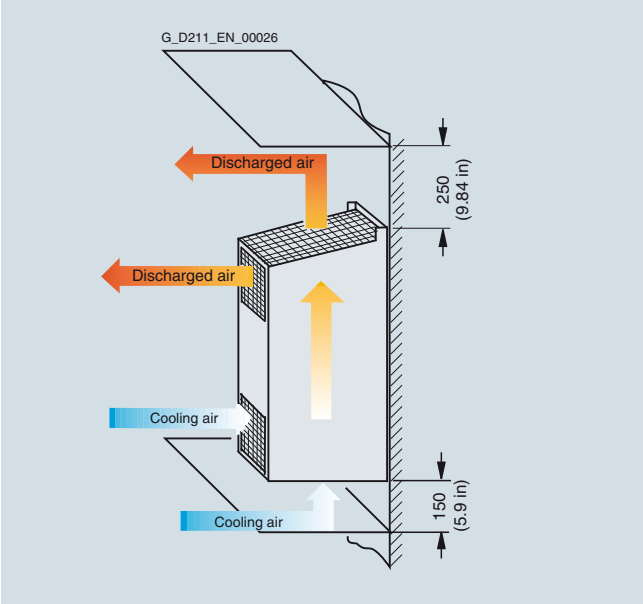

Power Modules, Motor Modules and Active Line Modules in frame sizes FX and GX

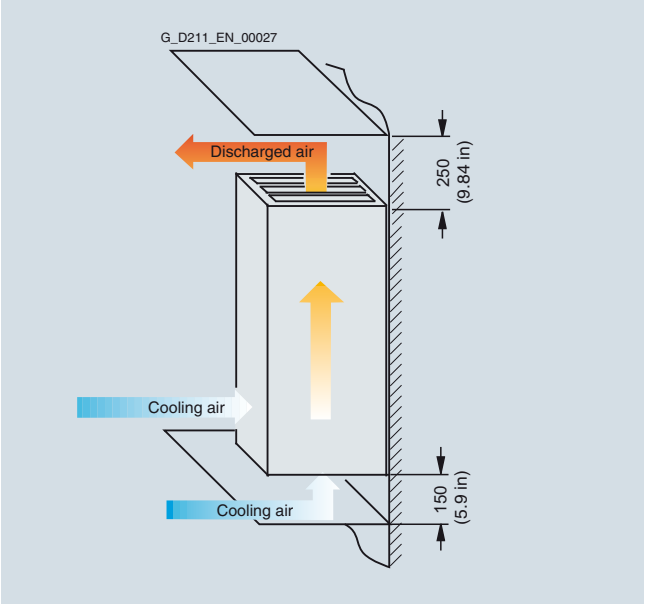

Active Line Modules in frame sizes HX and JX
Motor Modules in frame sizes HX and JX

Calculation of internal control cabinet temperature

Control cabinet with forced ventilation

In a control cabinet with forced ventilation, the heat loss P_V passes to the through-flowing air that then rises in temperature by $\Delta\varphi$. In the time interval Δt, the air absorbs the heat $Q = c \times m \times \Delta\varphi = P_V \times \Delta t$, and at the same time the air volume V flows through the control cabinet (c is the specific heat capacity of the air). Mass m and volume V are linked via density ρ. $m = \rho \times V$ applies. When inserted in the formula above, the following equation is obtained: $P_V = c \times \rho \times (V/\Delta t) \times \Delta\varphi$

The heat loss P_V, that can be dissipated by forced ventilation, is thus proportional to the volume flow $\dot{V} = V/\Delta t$ that the fan delivers through the control cabinet and the permissible degree of heating $\Delta\varphi = T_C - T_a$

The heat capacity and density of the air depend on the humidity level and atmospheric pressure. For this reason, the equation is dependent on other parameters. To estimate the temperature rise in the control cabinet in a typical industrial environment, c = 1 kJ/kg × K and ρ = 1.2 kg/m^3 can be assumed. This results in the following quantity equation:

$$P_V\,[\mathrm{W}] = 1200 \times \dot{V}\,[\mathrm{m^3/s}] \times \Delta\vartheta\,[\mathrm{K}]$$

with $\Delta\varphi = T_C - T_a$

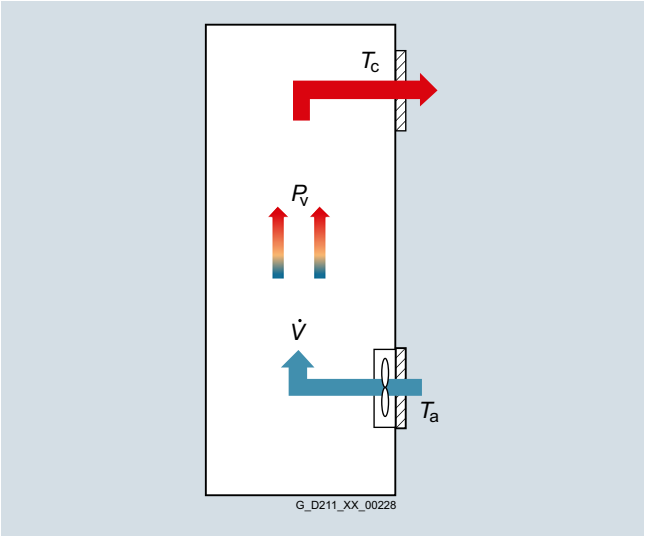

The temperature T_C as the ambient temperature of the components in the interior of the control cabinet can be estimated with the formula given and must be checked by means of measurements for each application because local hot spots can form, e.g. in close proximity to a source of heat or hotspot caused by unfavorable air circulation.

© Siemens AG 2017

Configuration (continued)

Control cabinet without forced ventilation

A control cabinet without forced ventilation conducts the heat loss P_v generated in the interior to the surrounding air (external temperature T_a) through the surface. For the heat flow, $\dot{Q}$ the following applies in the steady state:

$$\dot{Q} = k \times A \times \Delta\vartheta = P_v$$

k is the heat transfer coefficient, A is the effective cooling surface of the control cabinet, and $\Delta\varphi$ is the temperature difference between the internal cabinet temperature and the external temperature $\Delta\varphi = T_c - T_a$

The transfer of heat through the walls of the control cabinet is determined by the heat transfer of the interior air to the cabinet wall, heat conduction within the cabinet wall and heat transfer from the cabinet wall to the external air. The heat transfer is to be calculated by the heat transfer coefficient α, and heat conduction by the heat conductivity λ and the thickness d of the cabinet wall. The resulting equation for the possible heat loss P_v is:
$P_v = [1/(1/\alpha_i + d/\lambda + 1/\alpha_a)] \times A \times \Delta\varphi = k \times A \times \Delta\varphi$

$P_v = k \times A \times \Delta\varphi$

Typical values for the heat transfer coefficient k in the case of control cabinets with walls of painted stainless steel which are up to 2 mm (0.08 in) thick:

	k value
Stationary (non circulating) air in the control cabinet and stationary (non circulating) external air $\alpha_i = \alpha_a = 6$ W/(m^2 × K)	approx. 3 W/(m^2 × K)
Circulating air in the control cabinet and non-circulating external air $\alpha_i = 40$ W/(m^2 × K); $\alpha_a = 6$ W/(m^2 × K)	approx. 5.2 W/(m^2 × K)

The calculating procedures of IEC 60890 (VDE 0660 Part 507) can be used for determining the ambient temperature T_c in the interior of the control cabinet. All heat sources in the control cabinet must be taken into account in the calculation, e.g. Line Modules, Motor Modules, power supplies, filters, reactors. It is important to determine the effective cooling surface dependent on the method of setting up the control cabinet. The standard can also be used for control cabinets with ventilation openings (natural convection).

The estimated temperature T_c and the temperature distribution in the control cabinet should be checked with measurements for every application since local hotspots can form, e.g. in close proximity to a source of heat or a hotspot.

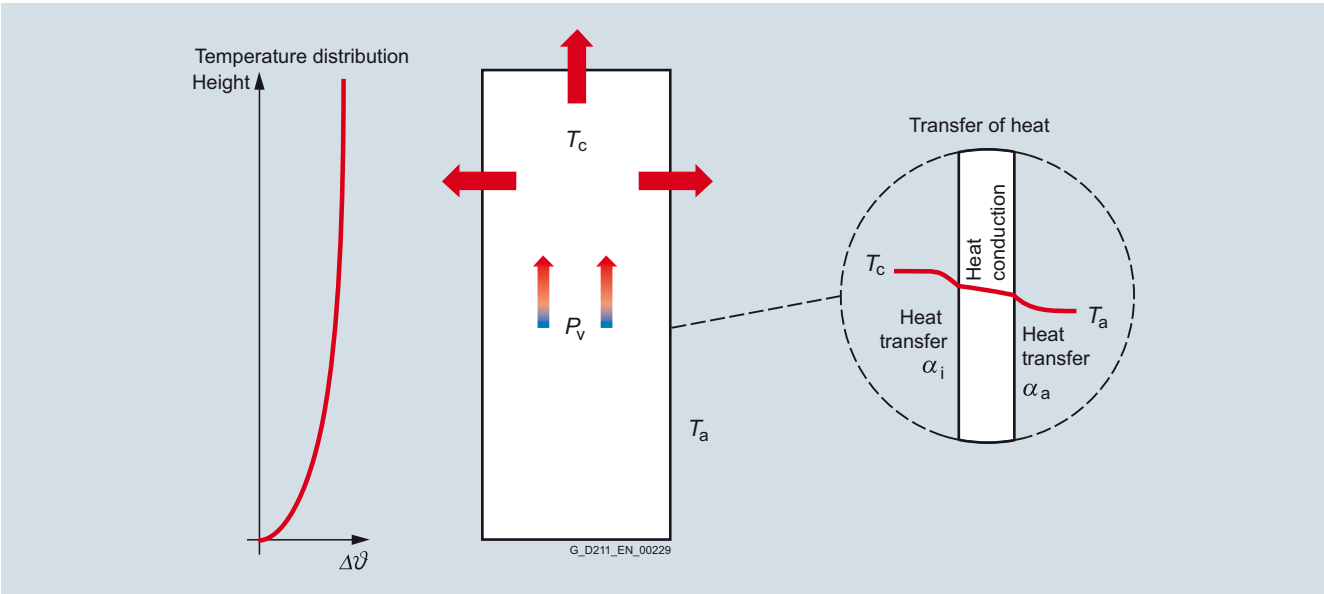

Control cabinet with air conditioner

The control cabinet emits heat via its surface and the air conditioner.

Manufacturers provide information on the design of the air conditioner, e.g. Rittal:

www.rittal.de/produkte/system-klimatisierung/index.asp

© Siemens AG 2017

Drive applications

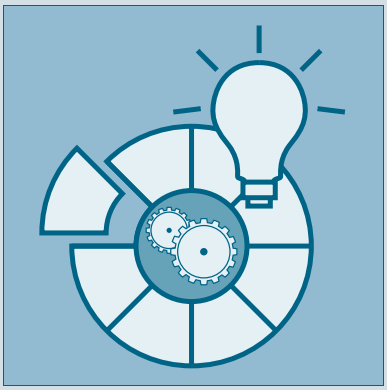

14/2	Introduction
14/5	Test stands
14/6	Servo pumps
14/8	Storage and retrieval machines
14/10	Converting

You can find additional information on the Internet at:
www.siemens.com/sinamics-applications
https://support.industry.siemens.com

© Siemens AG 2017

Introduction

Overview

Standard applications: Understanding and profiting from know-how

The development of standard applications is a major area of activity within the Siemens automation and drive environment. The scope of these standard applications ranges from clearly organized documentation that focuses on one or several technologies (e.g. Safety Integrated) to complete, comprehensive, standardized solutions for complex tasks (e.g. cross cutters).

Standard application requirements

One feature that all application examples have in common is that they are designed to help users help themselves. They have been created by developers with extensive tool, commissioning and application know-how to make them as user-friendly as possible. Standard applications generally provide the user with reusable components.

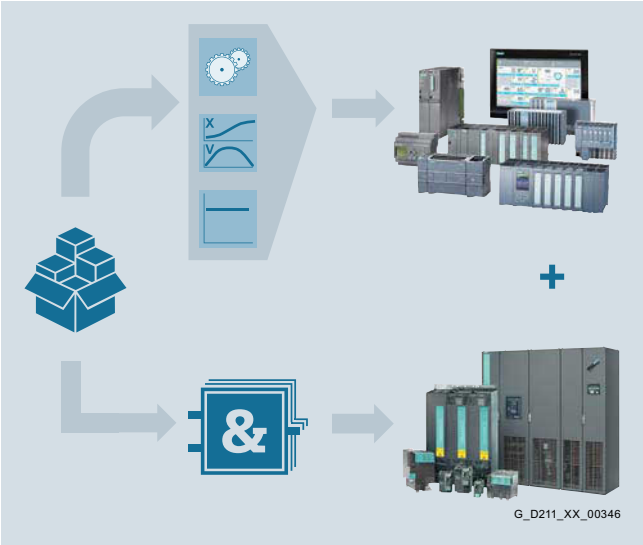

Technology functions in the higher-level control system

- Tested SIMATIC PLC blocks
- Reusable HMIs and faceplates

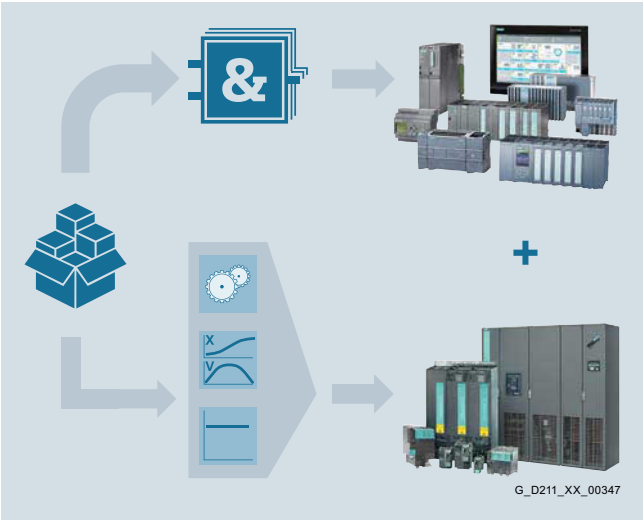

Technology functions in the drive

- Tested SIMATIC PLC blocks
- Application-specific Drive Control Charts (DCC)
- Reusable HMIs and faceplates

Benefits

Freely available application examples offer:

- Explanation of the necessary configuring steps with Siemens engineering tools
- Reusable standardized blocks for SIMATIC PLC
- Functionally coordinated programs and blocks
- Significantly shorter commissioning times

Various application examples also explain how to use free function blocks (FFB), logic processing integrated in the drive with Drive Control Chart (DCC) and Safety Integrated.

Application examples

The following application examples are just a selection of some of the many applications that are available on the Internet at:

- SINAMICS S: Controlling the speed of a SINAMICS S120 with SIMATIC S7-300/400F (STEP 7 V5) via PROFINET/PROFIBUS with Safety Integrated (via PROFIsafe) and HMI
  https://support.industry.siemens.com/cs/document/68624711
- SINAMICS S: SINAMICS S120 web server – user-defined sample pages
  https://support.industry.siemens.com/cs/document/78388880

You can find additional information on the Internet at:

www.siemens.com/sinamics-applications

https://support.industry.siemens.com

More information

Expandable drive technologies

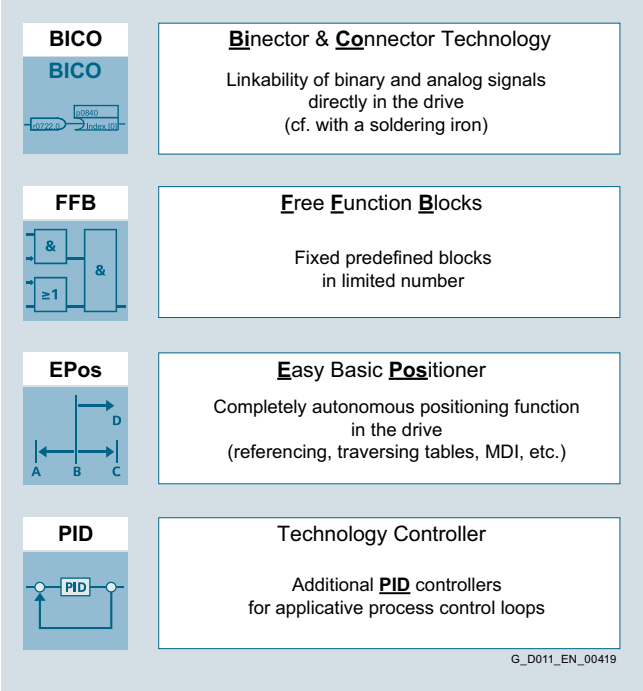

Standard Technology Functions

© Siemens AG 2017

More information (continued)

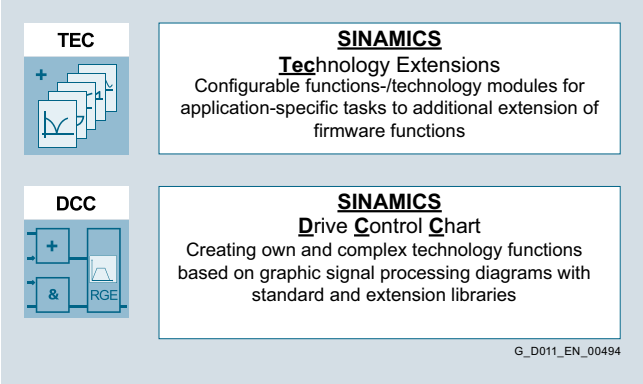

Advanced Technology Functions

The development of standard technological applications is a dedicated area of activity within the Siemens automation and drive environment. Owing to the generally large size of the applications, they are supplied with detailed documentation and example codes.

These applications focus on the use of product features such as SINAMICS Drive Control Chart (DCC) with its Drive Control Block (DCB) libraries of DCB Standard and DCB Extension, SINAMICS Technology Extensions (TEC) or Free Function Blocks (FFB).

This enables detailed, complete and standardized solutions for complex drive tasks.

At the same time these solutions can be flexibly adapted and can be expanded with further elements or special functions by the user.

Technological applications

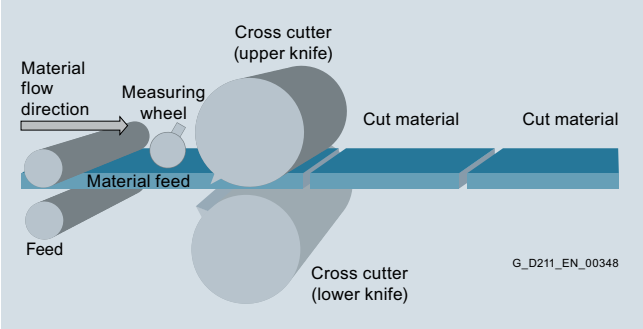

Another focal point are the technologically sophisticated application examples such as:

- Cross cutter
- Flying saw
- Winder
- Angular-locked synchronism in four different variants

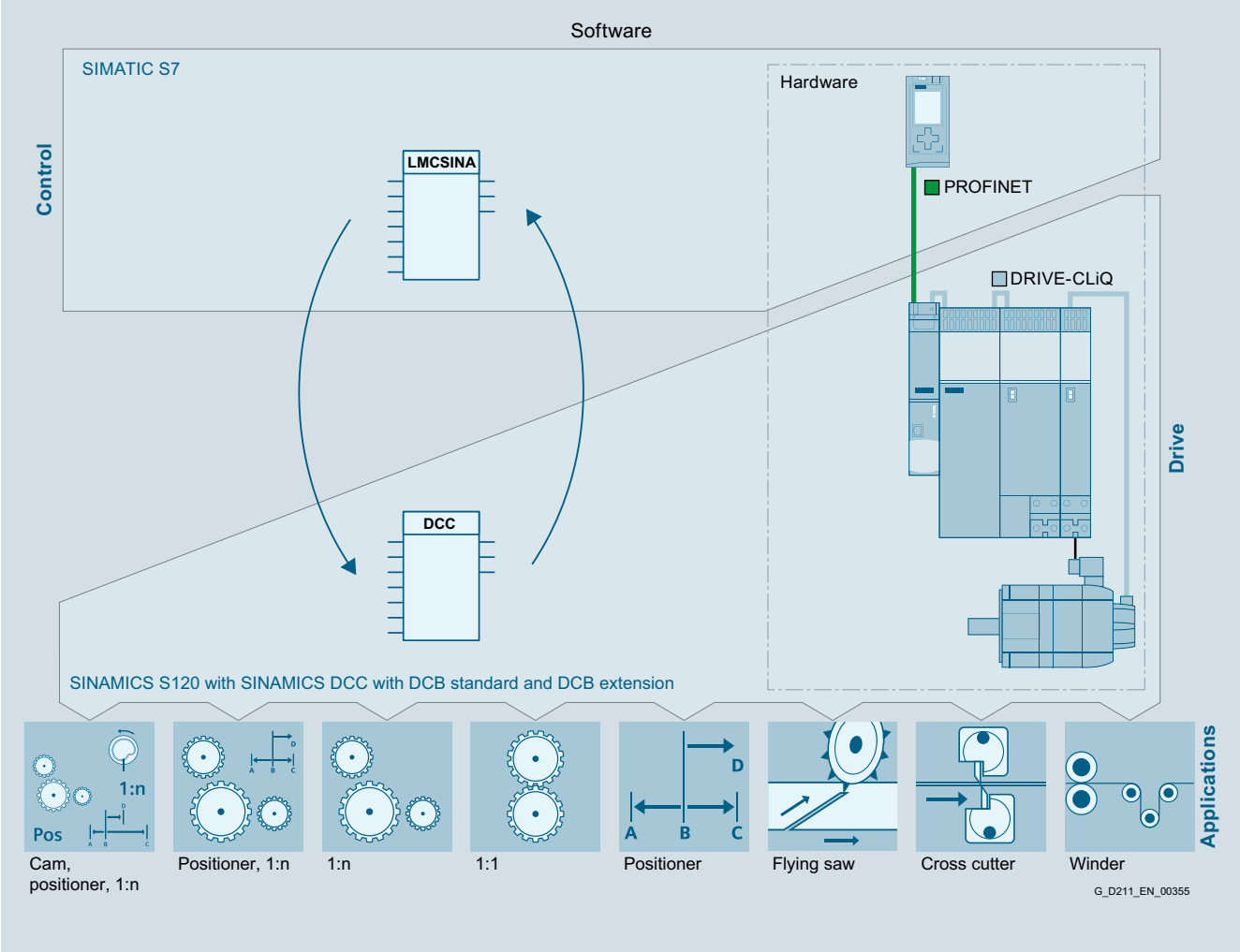

© Siemens AG 2017

More information (continued)

The technological applications make selective use of the relevant engineering concepts in order to facilitate implementation.

Customer benefits:

- Drive-oriented solutions of positioning and synchronous operation applications
- Significant expansion of the DCC scope of functions
- Drive-oriented interpretation of application technology know-how in dedicated solutions
- Drive-oriented complex mechanical calculations

Basis for the technological applications

The technological applications supplied by Siemens are based on the DCB Extension libraries [1] "**GMC**" or "**Math Extended**".

GMC: for Motion Control applications [1]

- For applications with an extensive range of Motion Control functions (positioning, synchronous operation, cam, etc.)
- Individual functions are implemented as elementary function blocks
- Functions that can be combined are linked to form complex elementary function blocks
- These functions can be optionally combined to implement complex tasks

Math Extended: for extended mathematical and logical functions [1]

- Provision of supplementary mathematical functions
- Additional trigonometric functions such as arc sine and arc cosine
- Additional logarithmic functions (common/natural logarithm)
- Additional logic functions (word-serial AND / OR, etc.)

Requirement of the technological applications

Technological applications are generally complex in terms of process engineering, mathematics and concept. They are designed to provide the user with reusable components in the form of a standard application.

Reusable components:

- Tested SIMATIC PLC blocks
- Finished commissioning/configuration scripts
- Application-specific Drive Control Charts (DCC)
- With application-specific DCB Extension libraries
- Reusable HMIs and faceplates

For more information and support, please get in touch with your local Siemens contact person.

www.siemens.com/automation-contact

[1] Use of the internal drive interface to integrate a DCB library requires a license. See SINAMICS Drive Control Chart (SINAMICS DCC).

© Siemens AG 2017

Overview

Machines for performing reproducible characteristic tests

Test stands are available for many areas. Irrespective whether an automotive, roller, gearbox, motor, power or some other component test stand is involved.

In addition to the mechanical design for mounting the test object, the drive and control equipment as well as sensors must be provided to be able to produce the characteristics and record the measured values.

Test stand requirements

Test stands require a variety of different technological functions, for example:

- Consistent speed and torque
- An open and flexible closed-loop control system with BICO engineering to provide outstanding torque quality
- Rotating field frequencies up to 3200 Hz
- Energy recovery for braking without dangerous current harmonics with adjustable power factor
- Resistance to power fluctuations
- Energy exchange in the coupled DC link for multi-axis test stands
- Integration of modern simulation tools, such as Matlab or Labview
- Computer link for long-term data recording and a continuous trace (including ability to export measurements for evaluation by external tools)
- Extremely high dynamic response, e.g. for the simulation of internal combustion engines
- Integrated safety functions, e.g. SLS on entering the test cell
- Battery simulation integrated in test stand
- Setpoint specification in real time by PROFINET IRT or an internal drive function

These functions can be implemented by combining a SINAMICS S120 multi-axis converter with SIMOTICS motors. The SIMOTION control system is a freely programmable platform for control structures that can be configured and connected for optimum isochronous operation with PROFINET.

Benefits

In addition to supplying the appropriate products, Siemens can also support you:

- With the planning of a test stand
- By conducting extensive vibration calculations:
  - Rotor dynamics analyses
  - Multi-body simulations
- With engineering tasks by providing openness for external setpoint sources (e.g. simulation tools)
- By supplying extended drive technologies (e.g. SINAMICS TEC for simulating combustion engines).

Design

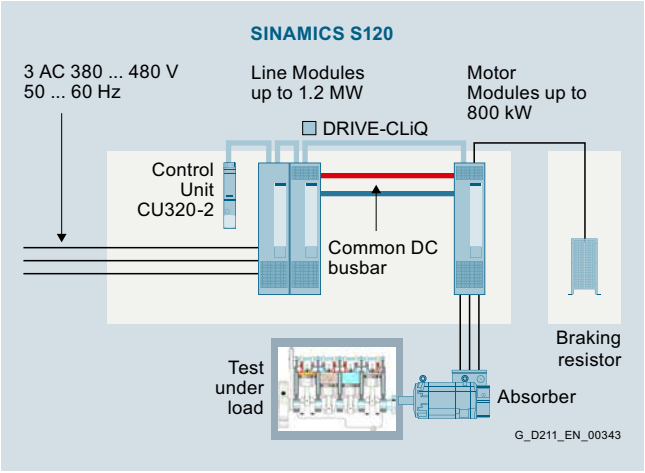

The solution illustrated in the diagram demonstrates how combustion engines in the automotive industry are tested "cold" in the end-of-line area.

Combustion engines are quality-tested directly in the assembly line. In cold testing as opposed to hot testing, the engine is not powered by fuel but electrically, which allows for more eco-friendly testing. On completion of the leak test, the engine is filled with oil and, if required, with fuel. The cold test results will show whether the engine complies with quality requirements.

The challenge in this case is to identify any asymmetry or deviation in relation to a stored reference engine.

More information

You can find additional information on the Internet at:

www.siemens.com/teststands

© Siemens AG 2017

Overview

Servo pump – the energy-saving solution for hydraulic machines

Outstanding efficiency all along the line

Efficiency is becoming an increasingly important factor in the optimization of hydraulic machines and plants. This basically applies to all types of hydraulically driven axis, but particularly to the axes of presses, injection molding machines and blow molding machines, for example. In addition to the trend in favor of hydraulic machines which are partially or fully electrical in design, it is also beneficial to optimize the hydraulic units themselves.

Energy saving made easy

With its new, highly dynamic servo pump, Siemens has the perfect answer. With energy savings of up to 70 %, your investment in the future will pay off within a very short time. Suitable combinations comprising at least one hydraulic pump and a SIMOTICS synchronous motor - a development which is state of the art with respect to energy efficiency - will guarantee that you achieve maximum energy savings.

Benefits

The advantages at a glance

- High energy efficiency: Savings of up to 70 %
- Active control of the servo pump on the basis of Drive Control Chart (DCC)
- Enormous reduction in noise emissions
- High efficiency
- Simple drive system with broad scope of functions
- Reduced complexity
- Easy system integration
- Simple preventive maintenance
- Reduction in quantity of valves
- Optimum adaptation of force and velocity to the pressing process
- Precise reproducibility of velocity, force and cycle rates
- Small oil tank
- Highly developed diagnostics capability
- Modular design

Application

Process-optimized use of energy

Energy-efficient, modernized systems generally consume only as much energy as the hydraulic machines need in the relevant phases. The energy saving effect is greatest during "idle times": The servo-driven pump is then virtually at a standstill and consumes only a minimal amount of energy, by contrast with the pump in conventional solutions which needed to continue running at a reduced output (15 to 20 %).

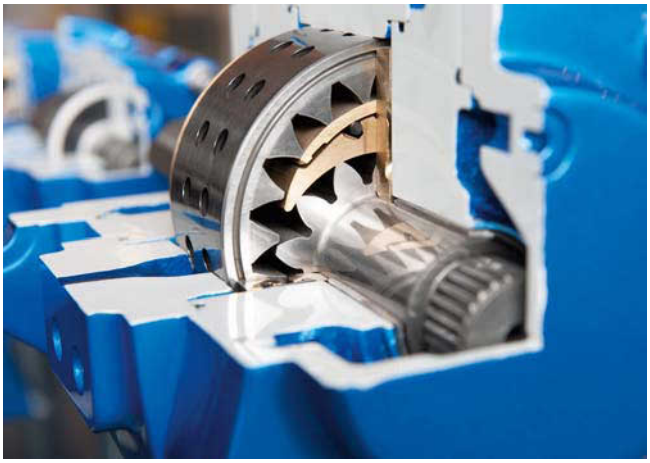

© Siemens AG 2017

Design

Flexibility based on standard components

The servo pump solution comprises the following standard components

- SINAMICS S120
- SIMOTICS servomotors
- SD card with closed-loop control software based on DCC

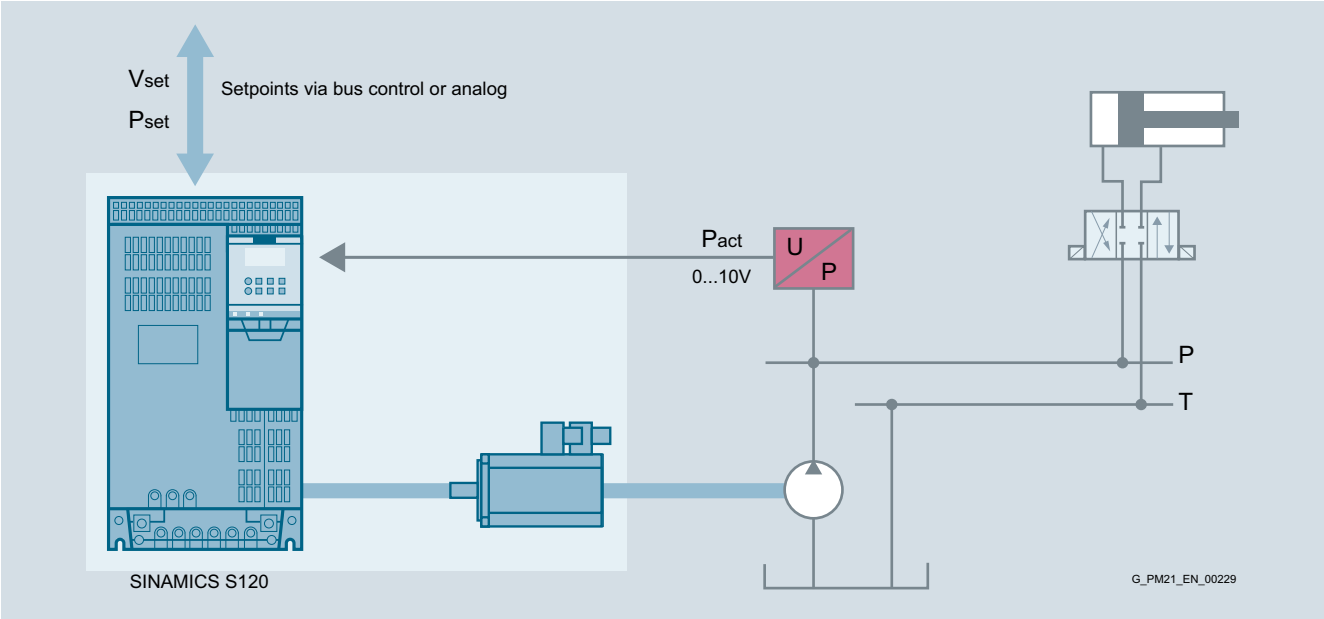

Schematic representation of servo pump

More information

You can find additional information on the Internet at

www.siemens.com/servo-pump

© Siemens AG 2017

Overview

Benefits to the power of three – outstanding productivity, all-encompassing safety technology and optimized energy efficiency

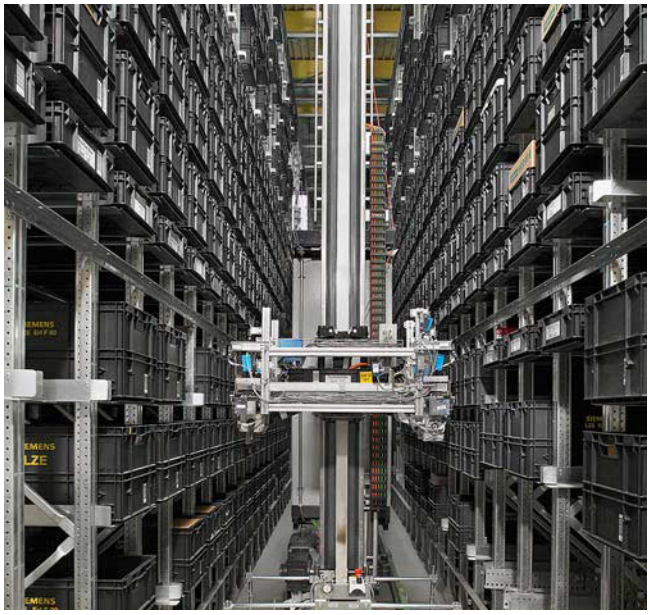

The more flexible, speedy and precise they are, the greater the competitive edge they deliver: Storage and retrieval machines are a core component of conveyor, logistics and stock movement systems. They offer enormous potential for saving time and money. Furthermore, they play a substantial role in reducing energy consumption. Operator protection is another core issue – the relevant requirements for storage and retrieval machines are clearly defined in the C standard EN 528. As a complete provider of components and systems, Siemens can supply the solutions to all these challenges.

Throughput increased by up to 15 %

Siemens has developed the right solutions for raising the performance of storage and retrieval machines. These are designed to maximize acceleration potential while minimizing wear. They also use sway control to reduce mast vibrations, helping to deliver material savings.

Performance boost thanks to intelligent all-wheel drive

With two powered wheels on the chassis, the drive torque can be distributed in such a way as to maximize acceleration and prevent the drive wheels from spinning. Siemens can supply a specially developed application that allows the drive torque to be statically and dynamically distributed between both drive wheels.

Integral sway control in drive increases throughput

Fast acceleration rates inevitably lead to mast vibration. With the assistance of the SINAMICS technology extension VIBX (Vibration Extinction), this vibration can be prevented without restricting the dynamic performance of the machine. With VIBX, the acceleration/deceleration of the travel axes is unable to excite the natural frequency of the storage and retrieval machine. The frequency can be adapted as a function of the cargo load and the position of the load handling device while the machine is in operation. There is no need to install a sensor to detect mast vibration. The sway control function is proven to shorten the time that it takes a mast to reach a sufficiently still position to allow load handling devices to move into a rack, pick up goods and move out again so that the storage and retrieval machine can travel to the handover station. This boosts throughput by up to 10 % and also increases warehouse capacity. Thanks to the reduction in wear and tear on the machine, less expensive materials can be used in the machine construction. Energy consumption can be reduced as a result of the lower masses.

By combining sway control (VIBX) with an intelligent all-wheel drive, it is possible to boost performance by up to 15 %.

100 % compliance with DIN / EN 528 – standards-compliant safety concepts

A comprehensive, but flexible safety concept is needed in order to protect operator and machine and to optimize the entire plant. Using the safety modules supplied free of charge by Siemens, it is possible to implement safety concepts in accordance with the storage and retrieval machine standard DIN EN 528. These modules are certified by TÜV (German Technical Inspectorate) and are therefore a "plug&play" solution. They are based on Integrated Drive Systems. The optimum interaction between the Safety Integrated functions of SIMATIC S7-F controllers and SINAMICS S120 drives allows customers to develop their own safety concepts. Siemens is offering concepts for warehouses with reduced or without buffer area, safety strategies for systems subject to slip and monitoring devices for typical storage and retrieval machine applications (e.g. slack rope or overload detection).

Up to 80 % reduction in grid power input – by use of self-generated energy

Drives often need to brake heavy weights in hoisting applications. Frequency converters with energy recovery capability help significantly reduce energy requirements. By using Line Modules capable of regenerative feedback, energy can be recovered and used to supply other loads. No braking resistors are required which means that a smaller control cabinet and a simpler cooling system can be used. Energy consumption is balanced via the common DC link of the SINAMICS S120, so minimizing the overall losses in the system. Furthermore, Siemens has used ultracapacitors to implement a strategy for storing energy in the DC link. In addition to reducing power input by up to 80 % [1], electrical braking remains possible even during power failures. Wear to brakes and wheels is also minimized and the availability of the storage and retrieval machine is increased.

[1] Applies to electromechanical systems with an overall efficiency of 90 %. With an efficiency of 80 %, the power input is reduced by 64 %.

© Siemens AG 2017

Design

Flexibility based on standard components

Storage and retrieval machine solutions comprise the following standard components:

- SINAMICS S120 converter
- SIMOTICS S-1FG1 servo geared motors
- SINAMICS Drive Control Chart (SINAMICS DCC)
- SINAMICS Technology Extensions VIBX

These components allow users to implement their own individual requirements of storage and retrieval machines down to the very last detail.

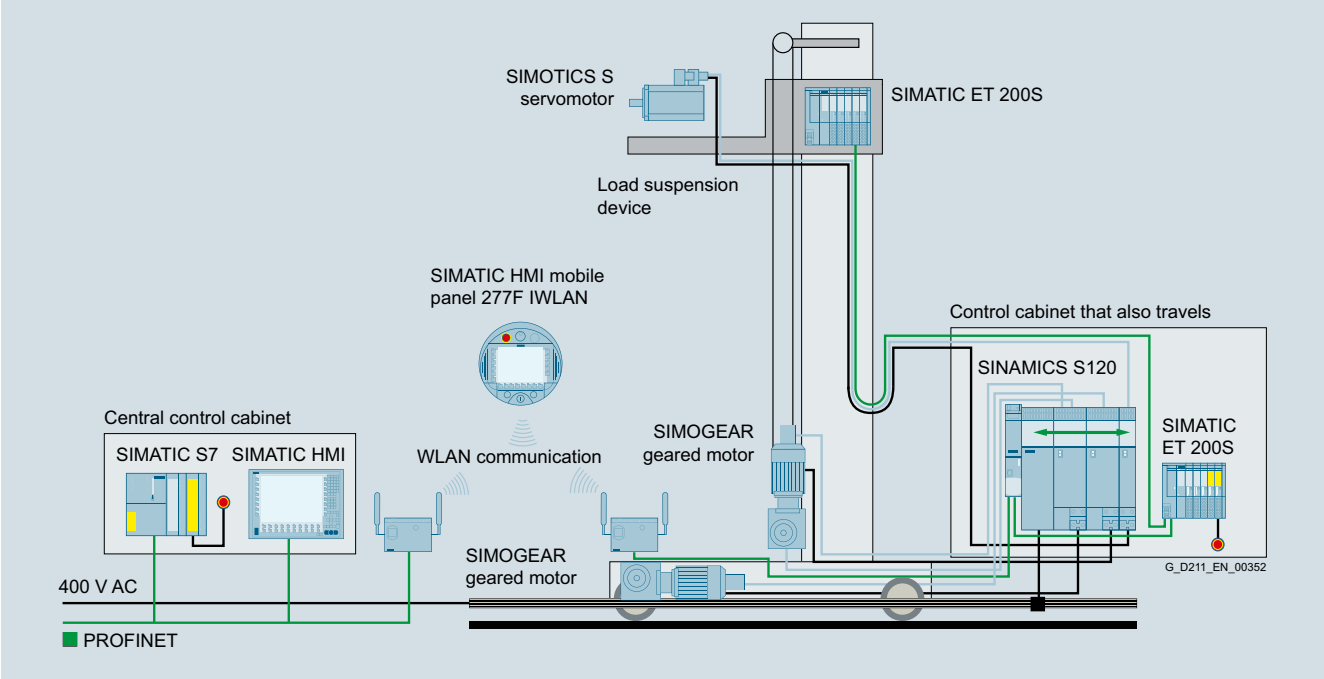

Schematic representation of storage and retrieval machine

More information

You can find additional information on the Internet at:

www.siemens.com/conveyor-technology-asrm

© Siemens AG 2017

Overview

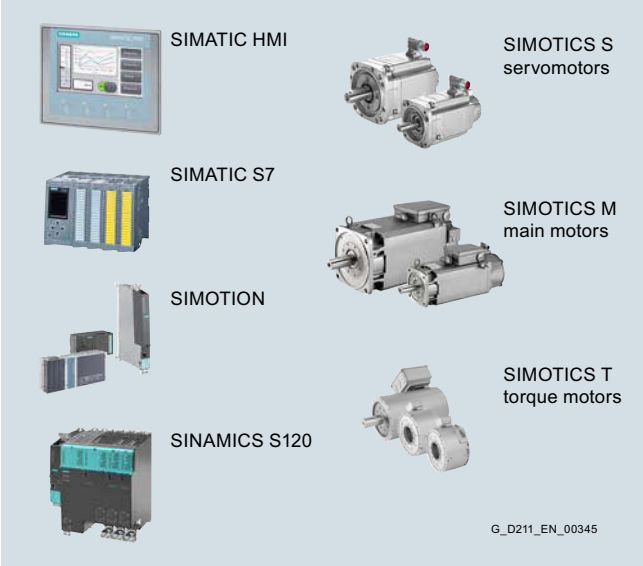

Converting – unwinding, cutting, stamping, sealing, laminating, printing, coating, crosscutting, winding, … – many functions that are used in a broad range of industrial sectors. Sectors such as paper production, the printing industry, the manufacture of cables and wires and the textile and packaging industries, to name but a few.

Siemens is offering complete, standardized drive and automation systems that are capable of performing all of these tasks. These range from an extensive spectrum of motors (asynchronous and synchronous motors, torque and linear motors, reluctance motors) to single-axis and multi-axis drive controllers, from simple vector converters to highly sophisticated multi-axis systems with integral motion controller, SIMOTION Motion Control system, safety controller and bus system up to the market-leading SIMATIC S7 automation controller in variants 300, 400, 1200 and 1500. The portfolio is rounded off by a large selection of operator panels and other system components such as filters and reactors.

But it is precisely those highly technological standards that different sectors demand of converting functions that are fulfilled in many cases by the technology functions included in the Converting Toolbox developed by Siemens.

The fully operational, tested standard functions integrated in the Siemens Converting Toolbox can be used to reduce the amount of time and money that need to be invested in all phases of the machine lifecycle.

The Converting Toolbox

Contains standard functions for converting processes with the following automation platforms:

SIMOTION
For high performance motion control applications with central intelligence

SIMATIC
For applications with a PLC as central control system

SINAMICS, SINAMICS DCC
for drive-based applications where the process control is realized in the drive system
SINAMICS S120 with the use of DCC (Drive Control Chart)

Center winder
Identical closed-loop control concepts on all platforms

Web tension control
Identical closed-loop control concepts on all platforms

Automatic roll change
Basic functionality in a drive-based solution

Material web accumulator

Traversing drive
Basic functionality in a drive-based solution

Cross cutter

Flying saw

Load balancing

G_D211_EN_00344

More information

You can find additional information on the Internet at:

www.siemens.com/converting

© Siemens AG 2017

Services and documentation

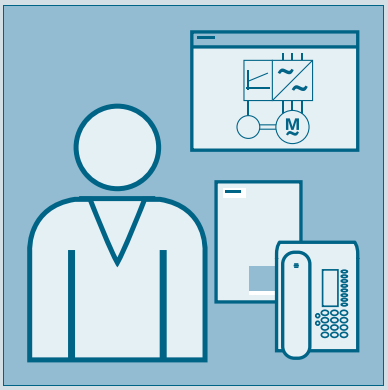

15/2 Partner at Siemens

15/3 Online Services
15/3 Information and Ordering Options on the Internet and DVD
15/4 Information and Download Center
Social Media, Mobile Media

15/5 Industry Services
15/6 Industry Services – Portfolio overview
15/8 Online Support

15/9 Applications

15/10 Training
15/10 SITRAIN – Training for Industry
15/11 SINAMICS S120 training courses
15/12 SINAMICS S120 training case

15/13 Siemens Automation Cooperates with Education
15/13 Simplify your education in automation

15/15 Control cabinets

15/17 Repair service contract RSC
15/19 Types of contract for production machines

15/20 Mechatronic Support

15/21 Spare parts services
15/21 Spare parts services during the lifecycle
15/21 Delivery of spare parts
15/22 Delivery as exchange product
15/22 Repair
15/23 Product upgrade service
15/23 General overhaul
15/24 Function check
15/24 Return of diagnostic parts
15/25 Stock reduction in spare parts store
15/25 Extended spare part availability

15/26 Spares on Web

15/27 mySupport documentation

15/28 Documentation
15/28 General documentation
15/29 SINAMICS S120 documentation
15/30 Motor documentation
15/30 Measuring systems documentation

© Siemens AG 2017

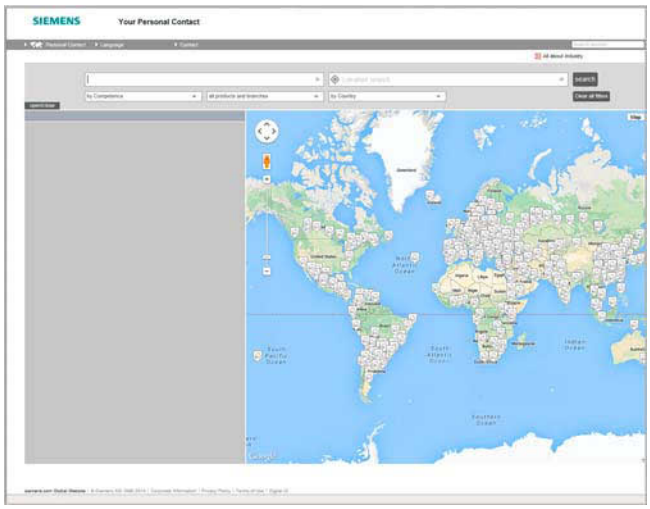

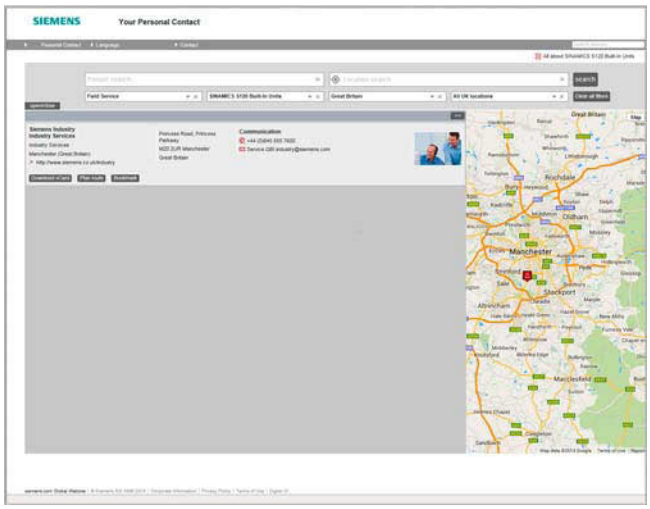

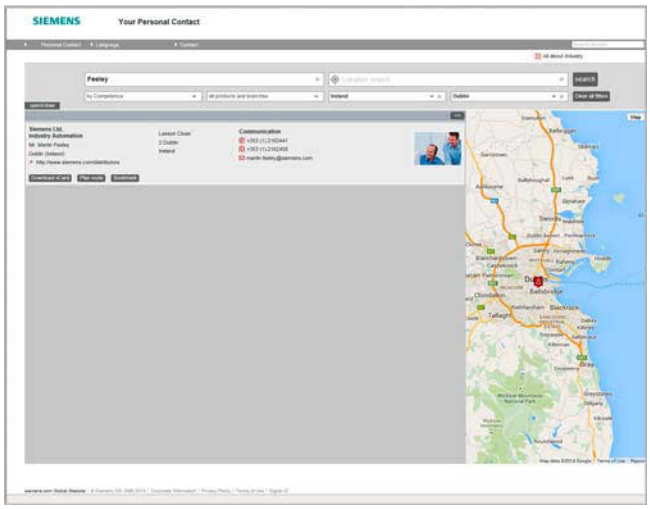

At Siemens we are resolutely pursuing the same goal: long-term improvement of your competitive ability.
We are committed to this goal. Thanks to our commitment, we continue to set new standards in automation and drive technology. In all industries – worldwide.

At your service locally, around the globe for consulting, sales, training, service, support, spare parts ... on the entire Industry Automation and Drive Technologies range.

Your personal contact can be found in our Contacts Database at:
www.siemens.com/automation-contact

You start by selecting

- the required competence,
- products and branches,
- a country,
- a city

or by a

- location search or
- person search.

© Siemens AG 2017

The Future of Manufacturing on the Internet

Detailed knowledge of the range of products and services available is essential when planning and engineering automation systems. It goes without saying that this information must always be as up-to-date as possible.

Industry is on the threshold of the fourth industrial revolution as digitization now follows after the automation of production. The goals are to increase productivity and efficiency, speed, and quality. In this way, companies can remain competitive on the path to the future of industry.

You will find everything you need to know about products, systems and services on the internet at:

www.siemens.com/industry

Product Selection Using the Interactive CA 01 Automation and Drives Catalog

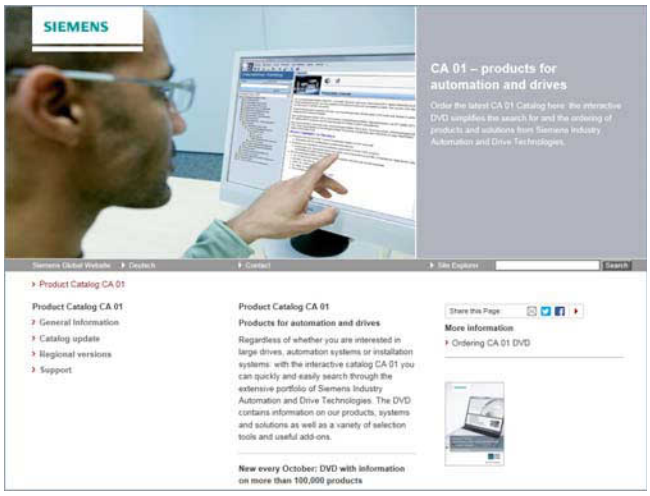

Detailed information together with user-friendly interactive functions:
The CA 01 interactive catalog covers more than 100,000 products, thus providing a comprehensive overview of the product range provided by Siemens.

You will find everything you need here for solving tasks in the fields of automation, switching, installation and drives.
All information is provided over a user interface that is both user-friendly and intuitive.

You can order the CA 01 product catalog from your Siemens sales contact or in the Information and Download Center:

www.siemens.com/industry/infocenter

Information about the CA 01 interactive catalog can be found on the Internet at:

www.siemens.com/automation/ca01

or on DVD.

Easy Shopping with the Industry Mall

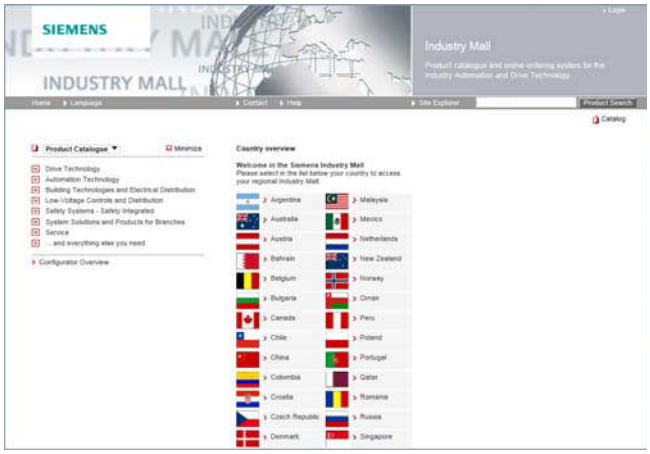

The Industry Mall is the electronic ordering platform of Siemens AG on the Internet. Here you have online access to a huge range of products presented in an informative and attractive way.

Data transfer via EDIFACT allows the whole procedure, from selection through ordering to tracking and tracing, to be carried out online. Availability checks, customer-specific discounts and bid creation are also possible.

Numerous additional functions are provided for your support. For example, powerful search functions make it easy to select the required products. Configurators enable you to configure complex product and system components quickly and easily. CAx data types are also provided here.

You can find the Industry Mall on the Internet at:

www.siemens.com/industrymall

© Siemens AG 2017

Downloading Catalogs

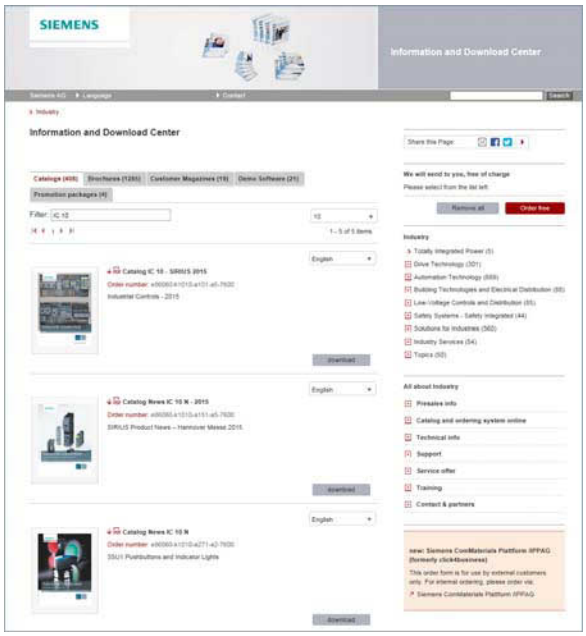

In addition to numerous other useful documents, you can also find the catalogs listed on the back inside cover of this catalog in the Information and Download Center. You can download these catalogs in PDF format without having to register.

The filter dialog above the first catalog displayed makes it possible to carry out targeted searches. If you enter "MD 3" for example, you will find both the MD 30.1 and MD 31.1 catalogs. If you enter "IC 10", both the IC 10 catalog and the associated news or add-ons are displayed.

Visit us at:

www.siemens.com/industry

Social and Mobile Media

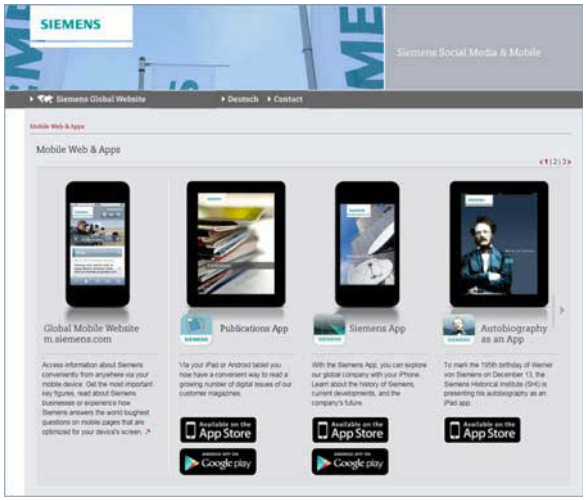

Connect with Siemens through social media: visit our social networking sites for a wealth of useful information, demos on products and services, the opportunity to provide feedback, to exchange information and ideas with customers and other Siemens employees, and much, much more. Stay in the know and follow us on the ever-expanding global network of social media.

To find out more about Siemens' current social media activities, visit us at:

www.siemens.com/socialmedia

Or via our product pages at:

www.siemens.com/automation or www.siemens.com/drives

Connect with Siemens Industry at our central access point to read all the news on the future of manufacturing, watch current videos and inform yourself about all the latest industry developments:

www.siemens.com/future-of-manufacturing/news.html

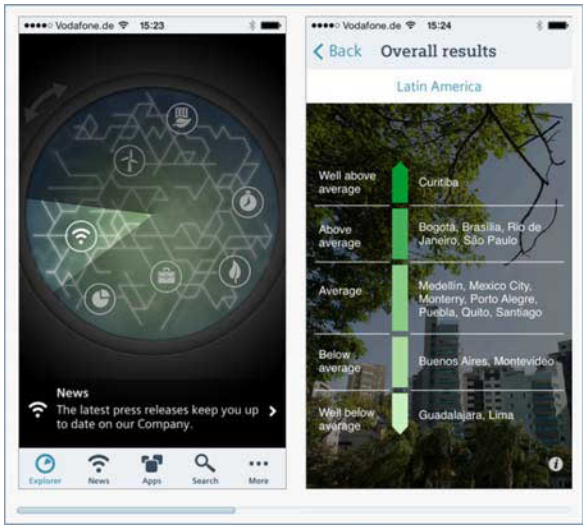

Discover the world of Siemens.

We are also constantly expanding our offering of cross-platform apps for smartphones and tablets. You will find the current Siemens apps at the App Store (iOS) or at Google Play (Android):

https://itunes.apple.com/en/app/siemens/id452698392?mt=8

https://play.google.com/store/search?q=siemens

The Siemens app, for example, tells you all about the history, latest developments and future plans of the company – with informative pictures, fascinating reports and the most recent press releases.

© Siemens AG 2017

Overview

Unleash potential – with services from Siemens

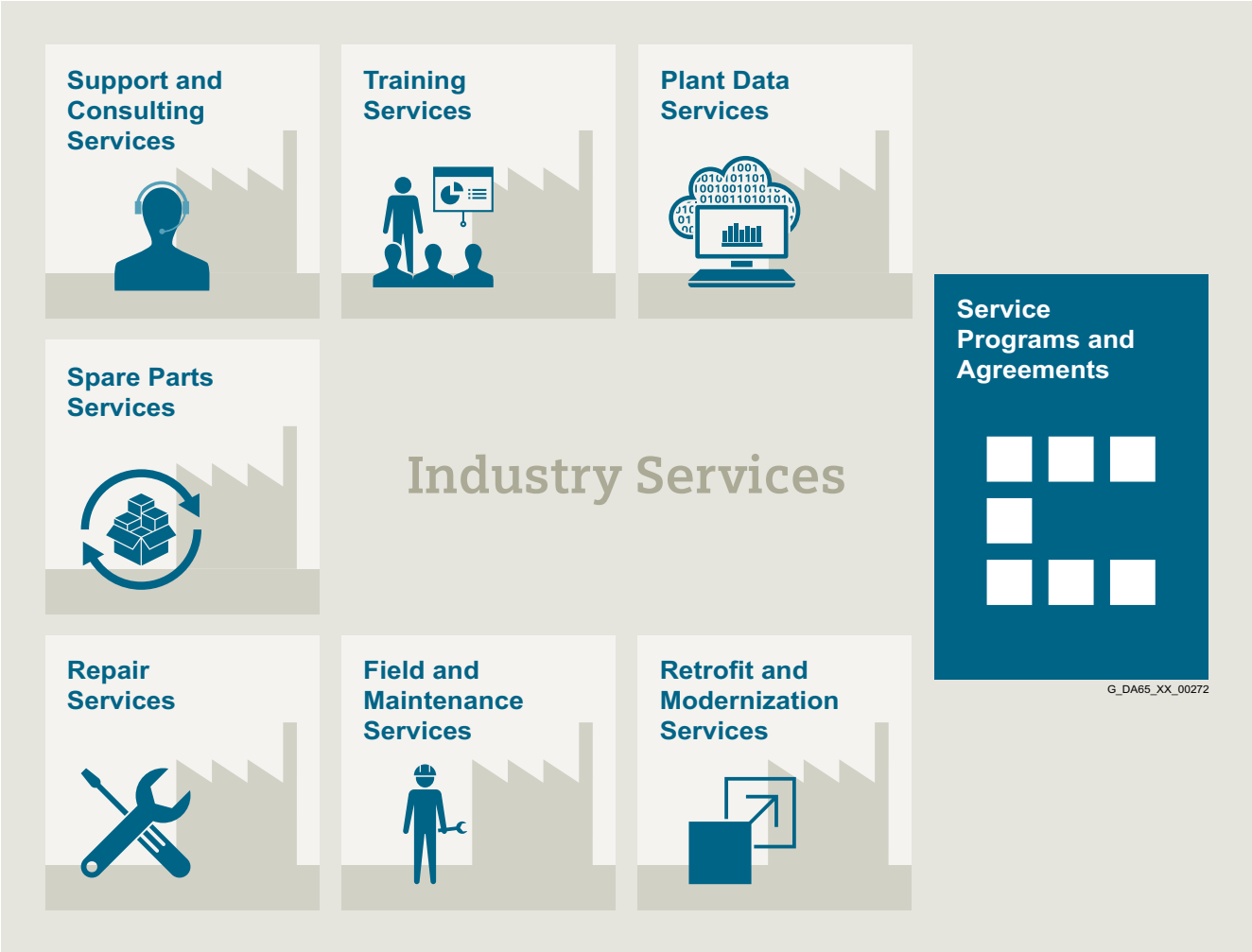

Increase your performance – with Industry Services

Optimizing the productivity of your equipment and operations can be a challenge, especially with constantly changing market conditions. Working with our service experts makes it easier. We understand your industry's unique processes and provide the services needed so that you can better achieve your business goals.

You can count on us to maximize your uptime and minimize your downtime, increasing your operations' productivity and reliability. When your operations have to be changed quickly to meet a new demand or business opportunity, our services give you the flexibility to adapt. Of course, we take care that your production is protected against cyber threats. We assist in keeping your operations as energy and resource efficient as possible and reducing your total cost of ownership. As a trendsetter, we ensure that you can capitalize on the opportunities of digitalization and by applying data analytics to enhance decision making: You can be sure that your plant reaches its full potential and retains this over the longer lifespan.

You can rely on our highly dedicated team of engineers, technicians and specialists to deliver the services you need – safely, professionally and in compliance with all regulations. We are there for you, where you need us, when you need us.

© Siemens AG 2017

Overview

Make your industrial processes transparent to gain improvements in productivity, asset availability, and energy efficiency.

Production data is generated, filtered and translated with intelligent analytics to enhance decision-making.

This is done whilst taking data security into consideration and with continuous protection against cyber attack threats.

www.industry.siemens.com/services/global/en/portfolio/plant-data-services/Pages/index.aspx

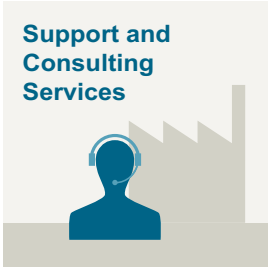

Industry Online Support site for comprehensive information, application examples, FAQs and support requests.

Technical and Engineering Support for advice and answers for all inquiries about functionality, handling, and fault clearance.

Information & Consulting Services, e.g. SIMATIC System Audit; clarity about the state and service capability of your automation system or Lifecycle Information Services; transparency on the lifecycle of the products in your plants.

www.industry.siemens.com/services/global/en/portfolio/support-consulting/Pages/index.aspx

From the basics and advanced to specialist skills, SITRAIN courses provide expertise right from the manufacturer – and encompass the entire spectrum of Siemens products and systems for the industry.

Worldwide, SITRAIN courses are available wherever you need a training course in more than 170 locations in over 60 countries.

www.industry.siemens.com/services/global/en/portfolio/training/Pages/index.aspx

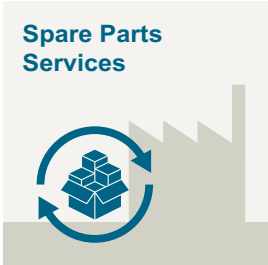

Are available worldwide for smooth and fast supply of spare parts – and thus optimal plant availability. Genuine spare parts are available for up to ten years. Logistic experts take care of procurement, transport, custom clearance, storage and order management. Reliable logistics processes ensure that components reach their destination as needed.

Asset optimization services help you design a strategy for parts supply where your investment and carrying costs are reduced and the risk of obsolescence is avoided.

www.industry.siemens.com/services/global/en/portfolio/spare_parts/Pages/index.aspx

© Siemens AG 2017

Overview (continued)

Are offered on-site and in regional repair centers for fast restoration of faulty devices' functionality.

Also available are extended repair services, which include additional diagnostic and repair measures, as well as emergency services.

www.industry.siemens.com/services/global/en/portfolio/repair_services/Pages/index.aspx

Provide a cost-effective solution for the expansion of entire plants, optimization of systems or upgrading existing products to the latest technology and software, e.g. migration services for automation systems.

Service experts support projects from planning through commissioning and, if desired over the entire extended lifespan, e.g. Retrofit for Integrated Drive Systems for an extended lifetime of your machines and plants

www.industry.siemens.com/services/global/en/portfolio/retrofit-modernization/Pages/index.aspx

Siemens specialists are available globally to provide expert field and maintenance services, including commissioning, functional testing, preventive maintenance and fault clearance.
All services can be included in customized service agreements with defined reaction times or fixed maintenance intervals.

www.industry.siemens.com/services/global/en/portfolio/field_service/Pages/index.aspx

A technical Service Program or Agreement enables you to easily bundle a wide range of services into a single annual or multi-year agreement.

You pick the services you need to match your unique requirements or fill gaps in your organization's maintenance capabilities.
Programs and agreements can be customized as KPI-based and/or performance-based contracts.

www.industry.siemens.com/services/global/en/portfolio/service_programs/Pages/index.aspx

© Siemens AG 2017

Overview

Online Support is a comprehensive information system for all questions relating to products, systems, and solutions that Siemens has developed for industry over time. With more than 300,000 documents, examples and tools, it offers users of automation and drive technology a way to quickly find up-to-date information. The 24-hour service enables direct, central access to detailed product information as well as numerous solution examples for programming, configuration and application.

The content, in six languages, is increasingly multimedia-based – and now also available as a mobile app. Online support's "Technical Forum" offers users the opportunity to share information with each other. The "Support Request" option can be used to contact Siemens' technical support experts.
The latest content, software updates, and news via newsletters and Twitter ensure that industry users are always up to date.

www.siemens.com/industry/onlinesupport

Online Support App

Using the Online Support app, you can access over 300,000 documents covering all Siemens industrial products – anywhere, any time. Regardless of whether you need help implementing your project, fault-finding, expanding your system or are planning a new machine.

You have access to FAQs, manuals, certificates, characteristic curves, application examples, product notices (e.g. announcements of new products) and information on successor products in the event that a product is discontinued.

Just scan the product code printed on the product directly using the camera of your mobile device to immediately see all technical information available on this product at a glance.
The graphical CAx information (3D model, circuit diagrams or EPLAN macros) is also displayed. You can forward this information to your workplace using the e-mail function.

The search function retrieves product information and articles and supports you with a personalized suggestion list. You can find your favorite pages – articles you need frequently – under "mySupport". You also receive selected news on new functions, important articles or events in the News section.

Scan the QR code for information on our Online Support app.

The app is available free of charge from the Apple App Store (iOS) or from Google Play (Android).

https://support.industry.siemens.com/cs/ww/en/sc/2067

© Siemens AG 2017

Overview

Our understanding of an application is the customer-specific solution of an automation task based on standard hardware and software components. In this respect, industry knowledge and technological expertise are just as important as expert knowledge about how our products and systems work. We are setting ourselves this challenge with more than 280 application engineers in 19 countries.

Application centers

We currently have application centers in:

- Germany:
  Head Office in Erlangen and in other German regions, e.g. in Munich, Nuremberg, Stuttgart, Mannheim, Frankfurt, Chemnitz, Cologne, Bielefeld, Bremen, Hanover, Hamburg
- Belgium: Brussels
- Brazil: Sao Paulo
- China: Beijing and 12 regions
- Denmark: Ballerup
- France: Paris
- Great Britain: Manchester
- India: Mumbai
- Italy: Bologna, Milan
- Japan: Tokyo, Osaka
- The Netherlands: The Hague
- Austria: Vienna
- Sweden: Göteborg
- Switzerland: Zurich, Lausanne
- Spain: Madrid
- South Korea: Seoul
- Taiwan: Taipeh
- Turkey: Istanbul
- USA: Atlanta

These application centers specialize in the use of SIMOTION/SIMATIC/SINAMICS. You therefore can rely on automation and drive specialists for implementing successful applications. By involving your personnel at an early stage in the process, we can provide a solid basis for rapid knowledge transfer, maintenance and further development of your automation solution.

Advice on applications and implementation

We offer a variety of consultation services to help you find the optimum solution for the SIMOTION/SIMATIC/SINAMICS application you want to implement:

The quotation phase includes

- clarification of technical questions,
- discussion of machine concepts and customer-specific solutions,
- selection of suitable technology and
- suggestions for implementation.

A technical feasibility study is also performed at the outset. In this way, difficulties during the application can be identified and solved early on. We can also configure and implement your application as a complete solution from a single source.

A large number of proven standard applications are available for use during the implementation phase. This saves engineering costs.

The system can be commissioned by experienced, competent personnel, if required. This saves time and trouble.

If servicing is required, we can support you on site or remotely. For further information about servicing, please see the section "Industry Services".

On-site application training

Training for the implemented applications can also be organized and carried out on site. This training for machine manufacturers and their customers does not deal with individual products, but the entire hardware and software system (for example, automation, drives and visualization).

From an initial concept to successful installation and commissioning: We can provide complete support for SIMOTION/SIMATIC/SINAMICS! Contact your Siemens representative.

You can find further information at
www.siemens.com/global/en/home/markets/machinebuilding.html

© Siemens AG 2017

Overview

Your benefit from practical training directly from the manufacturer

SITRAIN – Training for Industry – provides you with comprehensive support in solving your tasks.

Training directly from the manufacturer enables you to make correct decisions with confidence.

Increased profits and lower costs:

- Shorter times for commissioning, maintenance and servicing
- Optimized production operations
- Reliable configuration and startup
- Shorten commissioning times, reduce downtimes, and faster troubleshooting
- Exclude expensive faulty planning right from the start.
- Flexible plant adaptation to market requirements
- Compliance with quality standards in production
- Increased employee satisfaction and motivation
- Shorter familiarization times following changes in technology and staff

Contact

Visit our site on the Internet at
www.siemens.com/sitrain

or let us advise you personally. You can request our latest training catalog from:

SITRAIN – Training for Industry
SITRAIN Customer Support Germany:

Tel.: +49 (911) 895-7575
Fax: +49 (911) 895-7576

E-Mail: info@sitrain.com

Your benefits with SITRAIN – Training for Industry

Certified top trainers

Our trainers are skilled specialists with practical experience. Course developers have close contact with product development, and pass on their knowledge to the trainers and then to you.

Practical application with practice

Practice, practice, practice! We have designed the trainings with an emphasis on practical exercises. They take up to half of the course time in our trainings. You can therefore implement your new knowledge in practice even faster.

300 courses in more than 60 countries

We offer a total of about 300 classroom-based courses. You can find us at more than 50 locations in Germany, and in 62 countries worldwide. You can find which course is offered at which location at:
www.siemens.com/sitrain

Skills development

Do you want to develop skills and fill in gaps in your knowledge? Our solution: We will provide a program tailored exactly to your personal requirements. After an individual requirements analysis, we will train you in our training centers in your vicinity or directly at your offices. You will practice on the most modern training equipment with special exercise units. The individual training courses are optimally matched to each other and help with the continuous development of knowledge and skills. After finishing a training module, the follow-up measures make success certain, as well as the refreshment and deepening of the knowledge gained.

© Siemens AG 2017

Overview

Training courses for SINAMICS S120 drive system

This provides an overview of the training courses available for the SINAMICS S120 drive system.

The courses are modular in design and are directed at a variety of target groups as well as individual customer requirements.

The system overview will acquaint decision-makers and sales personnel with the system very quickly.

The configuration course provides all the information you need for the drive system dimensioning.

The courses dedicated to diagnostics and servicing, parameterization and commissioning, communication as well as extended functions such as Safety Integrated are sure to provide all the technical knowledge service engineers will need.

All courses contain as many practical exercises as possible in order to enable intensive and direct training on the drive system and with the tools in small groups.

Please also take note of the training options available for SIMOTICS motors. You will find further information about course contents and dates in Catalog ITC and on the Internet.

Title	**Target group**			**Duration**	**Course code**
(all courses are available in English and German)	Planners, decision-makers, sales personnel	Commissioning engineers, configuring engineers	Service personnel, maintenance technicians		
SINAMICS and SIMOTICS - Basics of Drive Technology	✓	✓	✓	5 days	DR-GAT
SINAMICS and SIMOTICS System Overview	✓	–	–	3 days	DR-SYS
SINAMICS S120 – Designing and Engineering	✓	–	–	5 days	DR-S12-PL
SINAMICS S120 – Parameterizing and Commissioning	–	✓	–	5 days	DR-S12-PM
SINAMICS S120 – Parameterizing Advanced	–	✓	–	5 days	DR-S12-PA
SINAMICS S120 – Parameterizing and optimization	–	✓	–	3 days	DR-S12-OPT
SINAMICS S120 – Parameterizing Safety Integrated	–	✓	–	4 days	DR-S12-SAF
SINAMICS S120 – Diagnostics and service	–	–	✓	5 days	DR-S12-DG
SINAMICS S120 – Diagnostics at Chassis and Cabinet Units	–	✓	✓	3 days	DR-S12-CHA
SINAMICS Diagnostics PROFINET and PROFIBUS	–	✓	✓	3 days	DR-S12-NET

© Siemens AG 2017

SINAMICS S120 training case

Overview

SINAMICS S120 training case with CU320-2 Control Unit

The SINAMICS S120 training case is used to teach students to use and understand the SINAMICS S120 drive system. It is suitable for direct customer presentations as well as for tests in technical departments. The SIMOTION D425-2 DP/PN upgrade kit can be used to convert the SINAMICS S120 training case to a SIMOTION D training case.

The case is optimized in terms of weight and volume and is assembled complete with castors and ready for connection. It contains the following components:

- SINAMICS CU320-2 DP or CU320-2 PN Control Unit with TB30 Terminal Board
- SINAMICS Smart Line Module 5 kW
- SINAMICS Double Motor Module 3 A
- SIMOTICS 1FK7022-5AK71-1AG3 synchronous servomotor with incremental encoder sin/cos 1 V_{pp} via SMC20
- SIMOTICS 1FK7022-5AK71-1LG3 synchronous servomotor with absolute encoder IC2048S/R and DRIVE-CLiQ interface
- Reference discs for position monitoring
- Control box for setpoint/actual-value linkage via terminals
- Prefabricated connections for an external motor (e.g., asynchronous motor)

The SINAMICS S120 training case is supplied ready-to-use with a demo project on the CompactFlash card and documentation.

Technical specifications

	SINAMICS S120 training case 6ZB2480-0CM00 6ZB2480-0CN00
Supply voltage	230 V 1 AC 50 Hz
Degree of protection	IP20
Dimensions	
• Width	320 mm (12.60 in)
• Height	650 mm (25.59 in)
• Depth	330 mm (12.99 in)
Weight, approx.	30 kg (66.2 lb)

Selection and ordering data

Description	Article No.
SINAMICS S120 training case	
• PROFIBUS variant with SINAMICS CU320-2 DP Control Unit	**6ZB2480-0CM00**
• PROFINET variant with CU320-2 PN Control Unit	**6ZB2480-0CN00**
Accessories	
SIMOTION D425-2 DP/PN upgrade kit	**6ZB2470-0AM00**
Operator control box	**6AG1064-1AA01-0AA0**

© Siemens AG 2017

Unique support for educators and students in educational institutions

Cooperates with Education

Automation

SIEMENS

Siemens Automation Cooperates with Education (SCE) offers a global system for sustained support of technical skills. SCE supports educational institutions in their teaching assignment in the industrial automation sector and offers added value in the form of partnerships, technical expertise, and know-how. As the technological leader, our comprehensive range of services can support you in the knowledge transfer for Industry 4.0.

Our services at a glance

- Training curriculums for your lessons
- Trainer packages for hands-on learning
- Courses convey up-to-date specialist knowledge
- Support for your projects / textbooks
- Complete didactic solutions from our partners
- Personal contact for individual support

Training curriculums for your lessons

Use our profound industrial know-how for practice oriented and individual design of your course. We offer you more than 100 didactically prepared training curriculums on the topics of automation and drives technology free of charge. These materials are perfectly matched to your curricula and syllabuses, and optimally suited for use with our trainer packages. This takes into account all aspects of a modern industrial solution: installation, configuration, programming, and commissioning. All documents, including projects, can be individually matched to your specific requirements.

Particular highlights:

- The new SIMATIC PCS 7 curriculums and trainer packages. Using plant simulation, you can pass on basic, practice-oriented PCS 7 knowledge at universities within about 60 hours (= 1 semester).
- The new TIA Portal training materials for SIMATIC S7-1500 / S7-1200 / S7-300 are available in English, German, French, Italian, Spanish, Portuguese and Chinese for download.

www.siemens.com/sce/curriculums

Trainer packages for hands-on learning

Our SCE trainer packages offer a specific combination of original industrial components which are perfectly matched to your requirements and can be conveniently used in your course. These price-reduced bundles available exclusively to schools include innovative and flexible hardware and software packages.
SCE currently offers more than 80 SCE trainer packages including related equipment e.g. Micro Memory. These cover both the factory and process automation sectors. You can use them to impart the complete course contents on industrial automation at a very low cost.

Trainer packages are available for:

- Introduction to automation technology with LOGO! logic module
- PLC engineering with SIMATIC S7 hardware and STEP 7 software (S7-1500, S7-1200, S7-300 and TIA Portal)
- Operator control and monitoring with SIMATIC HMI
- Industrial networking over bus systems with SIMATIC NET (PROFINET, PROFIBUS, IO-Link)
- Sensor systems with VISION, RFID and SIWAREX
- Process automation with SIMATIC PCS 7
- Networked drive and motion technologies with SINAMICS/SIMOTION
- Power Monitoring Devices SENTRON PAC 4200
- Motor Management SIMOCODE
- CNC programming with SinuTrain

Important ordering notes:

Only the following institutions are authorized to obtain trainer packages: vocational schools, Colleges and Universities, in-house vocational training departments, non commercial research institutions and non commercial training departments.

To purchase a trainer package, you require a specific end-use certificate, which you can obtain from your regional sales office.

www.siemens.com/sce/tp

© Siemens AG 2017

Unique support for educators and students in educational institutions (continued)

Courses convey up-to-date specialist knowledge

Profit from our excellent know-how as the leader in industrial technologies. We offer you specific courses for automation and drive technology worldwide. These support you in the practice-oriented transferring of product and system know-how, are in conformance with curriculums, and derived from the training fields. Compact technical courses especially for use at universities are also available.

Our range of courses comprises a wide variety of training modules based on the principle of Totally Integrated Automation (TIA). The focus is on the same subject areas as with the SCE trainer packages.

Every PLC and drive course is oriented on state-of-the-art technology. Your graduates can thus be prepared optimally for their future professional life.

In some countries we are offering classes based on our training curriculums. Please inquire with your SCE contact partner.

www.siemens.com/sce/courses

Support for your projects/textbooks

Automation and drive technology is characterized by continuous and rapid developments. Service and Support therefore play an important role.

We can provide you with consulting for selected projects and support from your personal SCE contact as well as our web-based and regional Customer Support.

As a particular service, SCE supports technical authors with our know-how as well as with intensive technical consulting. Siemens library of special textbooks covering the industrial automation sector provides an additional resource for you and your students. These can be found at the SCE web site.

www.siemens.com/sce/contact
www.siemens.com/sce/books

Complete didactic solutions from our partners

Our partners for learning systems offer a wide range of training systems and solutions for use in your courses or laboratory.

These models have been designed based on our trainer packages and thus save you the time and cost of selfconstruction of individual components. The Partner systems provide you with simple and effective help in the fulfillment of your teaching assignment.

www.siemens.com/sce/partner

Contact for individual support

You can find your personal SCE contact on our Internet site. Your local SCE Promoter will answer all your questions concerning the complete SCE offering, and provide you with timely and competent information about innovations. When you encounter challenges, you can profit from our global team of excellence.

If a direct SCE contact is not listed for your country, please contact your local Siemens office.

www.siemens.com/sce/contact

SCE Support Finder for your Internet request

You are an educator and need support on the topic of industry automation? Send us your request:

www.siemens.com/sce/supportfinder

Discover SCE

© Siemens AG 2017

Overview

Complete equipment for machine tools and production systems

Our supplied range of products and services also includes complete equipment for machine tools and production systems with all services in the process chain from consulting through to after-sales service.

We support you in the areas of engineering, production and logistics.

Engineering support

Siemens supports you with advice on design in accordance with standards and concepts for drive systems, control, operation and safety.

Our engineers configure for you in EPLAN P8 and other commonly used CAD systems, execute projects designed to cost and adapt your documents where necessary to UL or new systems.

Our Technical Competence Center Cabinets in Chemnitz supports you with selecting and optimizing the suitable control-cabinet air-conditioning system. Apart from calculation and simulation, we also use instrumentation testing in our heat laboratory with load simulation.

We also offer the following services:

- Vibration measurements and control cabinet certification in the field
- Measurement of conducted interference voltages in our laboratory

Cabinet engineering

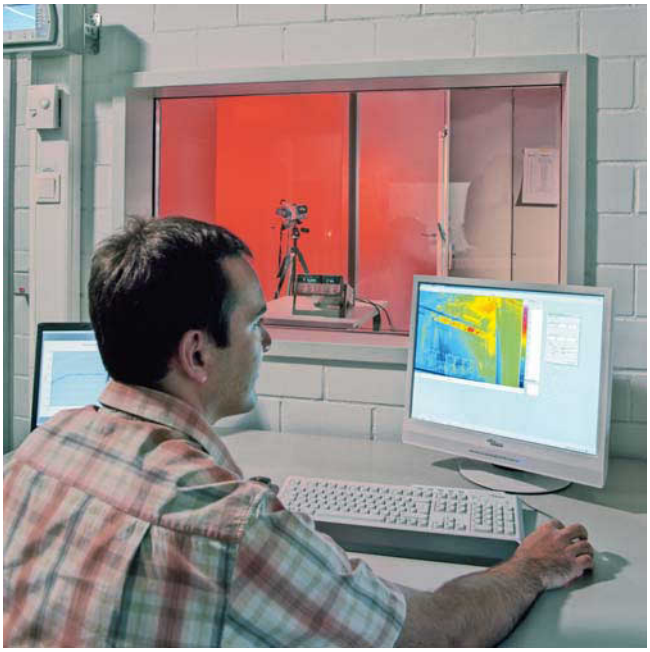

Testing in the heat laboratory

Production at a high level of quality

Complete equipment is manufactured at a high industrial level. This means:

- Examining consistency of the order documentation
- Checking for adherence to current regulations
- Collision check in 3D layout, taking into account the free space required thermally and electrically
- Automatic preparation of enclosures, cables and cable bundles
- Automated inspection and shipment free of faults
- Documentation and traceability
- Declaration of conformity regarding the Low-Voltage Directive and manufacturer's declaration on machinery directive
- UL label on request

Superior logistics

Everything from a single source offers you the following advantages:

- Cost savings for procurement, stockkeeping, financing
- Reduction in throughput times
- Just-in-time delivery

Individual support and maximum flexibility

Our technical consultants for complete equipment support customers and sales departments in the various regions. Our control cabinet customers are supported in the Systems Engineering Plant Chemnitz (WKC) by ordering centers and production teams that are permanently assigned to customers.

Distance does not present a problem; we also use web cams for consulting our customers.

© Siemens AG 2017

Overview (continued)

Worldwide repair service

Customer-specific logistics models, flexible production capacity and production areas as well as change management in all process phases ensure maximum flexibility.

Customized supplementary products

As part of its complete equipment program, Siemens also offers the development and construction of customized supplementary products, e.g. special operator panels and power supply systems.

Liability for defects

Of course we accept the same liability for defects for our complete equipment as for our SINUMERIK and SINAMICS products.

Furthermore, you can use our worldwide repair service anywhere and at any time.

Your benefits

One partner, one quotation, one order, one delivery, one invoice, and one contact partner for liability of defects.

For series production or individual items, Siemens is your competent partner for complete equipment.

Control cabinet with SINAMICS S120 in booksize format

© Siemens AG 2017

Overview

RSC description of performance

Siemens AG provides for the machine manufacturer and dealer (in the following referred to as the "Customer") at the installation site of the machine the services specified below under Scope of services for components from Siemens DF & PD contained in the parts list of the RSC Certificate.

The RSC is ordered by the Customer who states the required article numbers that can be obtained from the Siemens sales partners or found in catalogs and the Industry Mall. The Customer receives from Siemens a certificate of delivery, which thus signifies the conclusion of the RSC.

After the Customer has provided the final destination notification, Siemens sends the Customer an RSC Certificate detailing the place of performance and the service period.

The services to be provided by Siemens are requested via a service order from the Customer. The service order must be submitted within the service period of the RSC.

Place of performance

The specified service is provided at the installation site of the machine (hereinafter referred to as "on-site"). This corresponds to the country of the end customer and the latter's full address, as specified in the final destination notification. Services covered by this RSC shall only be provided in those countries named in the RSC country list.

Scope of services

The following services shall be provided:

- Provision of service personnel
  Siemens provides qualified personnel for the purpose of fault diagnostics and/or fault correction. The services are provided during the normal regional working hours in the country of installation.
- On-site fault diagnostics
  Fault diagnostics applies to components from Siemens DF & PD as stated in the parts list in the RSC Certificate.
- Fault correction on-site
  Fault correction is carried out by repairing and/or replacing defective components from Siemens DF & PD.
- Documentation of the fault correction
  A service report is prepared on-site in the language of the end customer and shall be signed by the end customer. A copy of the report remains with the end customer.

Contract periods / service period

The RSC is offered for the period of liability (warranty period) of the Siemens customers to their end customers. Different RSC periods permit various market requirements to be addressed.

The service period of the RSC begins on the date notified to Siemens in the final destination notification when commissioning has been completed at the end customer's site and ends on expiry of the selected RSC term. The beginning and end of the service period are stated in the RSC Certificate [1].

RSC Certificate

The Customer is provided with an RSC Certificate once the final destination notification has been handed over. This certificate shall contain the contract number and essential contract data such as machine number, machine type, parts list, beginning and end of the service period and the place of performance (address for the provision of services).

Service exclusions

The following is not included in the services:

- Complete motor spindles
- Services cannot be provided for wearing parts after the first 12 months of the service period.
- Machine commissioning or optimization
- Masonry work, metalwork, breaking work and other non-electrical work
- Fault diagnostics and fault correction relating to faults that have occurred as a result of
  - Non-compliance with the Siemens engineering and user guidelines, e.g. incorrect installation or grounding and incorrect operation or other improper treatment
  - Function-critical contamination, e.g. oil, conductive materials, rust
  - Mechanical damage
  - External electrical influences, e.g. effects of overvoltage, non-reactor-protected power factor correction systems and/or line harmonics
  - Wanton destruction
  - Force majeure

[1] For example, in the case of an RSC with 12 months contract period, maximum of 24 months from the transfer of risk (delivery of the components).

© Siemens AG 2017

Overview (continued)

Country list

A repair service is offered for the following countries:

Continent	Country/region
Country group 1	
Americas	Mexico, USA
Asia	China, India, Japan, South Korea, Taiwan, Thailand
Australia	Australia
Europe	Andorra, Austria, Belgium, Czech Republic, Denmark, Finland, France, Germany, Great Britain, Hungary, Italy, Liechtenstein, Luxembourg, Monaco, the Netherlands, Poland, Portugal, Rumania, Slovakia, Spain, Sweden, Switzerland, Turkey
Country group 2	
Africa	South Africa
Americas	Brazil, Canada
Asia	Indonesia, Israel, Malaysia, Singapore
Australia	New Zealand
Europe	Bosnia-Herzegovina, Bulgaria, Croatia, Estonia, Ireland, Latvia, Lithuania, Norway, Slovenia
Country group 3	
Africa	Egypt
Americas	Argentina, Chile, Columbia, Ecuador, Peru, Venezuela
Asia	Bahrain, Hong Kong, Kuwait, Oman, Qatar, Saudi Arabia, United Arab Emirates (Dubai), Vietnam
Europe	Belarus, Greece, Malta, Russia, Serbia and Montenegro, Ukraine

Countries not listed, for customers with framework contracts only.

Response time

The following response times apply in general whenever services are provided under the RSC in the event of a machine standstill:

Country group	
CG 1	Next working day
CG 2	Within two working days
CG 3	Depending on country-specific conditions
Countries not listed	Depending on country-specific conditions, only for customers with framework contracts for the price of the individual contract.

The response time is defined as the time between Siemens receiving the service order, technically clarified in advance by the Customer, and the Siemens service personnel commencing his travel to the place of performance or until troubleshooting commences using teleservice. The response times given apply to technically clarified service orders within the normal working hours of the region (e.g. Monday to Friday 8:00 to 17:00) excluding public holidays.

Spare parts

Spare parts are provided from our central spare parts warehouse or from regional spare parts warehouses using our worldwide spare parts logistics infrastructure. All of the essential spare parts are stocked in our central spare parts stores. Regional spare parts warehouses are adapted to include the components specified in the final destination certificate [1].

The following components are not defined as spare parts:

- Motors: They are repaired at an authorized repair workshop. For selected motors, Siemens in Germany stocks components for express delivery. These motors can be manufactured and delivered within a few working days. You can obtain the current list from your Siemens sales partner.
- Cables: The delivery times known to you usually apply.
- Special or customer-specific modules and components not available from Siemens as spare parts.

The RSC shall only be processed in accordance with the terms and conditions applying to repair service contracts (RSC).

www.siemens.com/automation/rscagb

Benefits

- Protection against unknown costs for a fixed price
- RSC can be synchronized with the machine warranty period
- Planning certainty and calculable costs
- Easier processing of servicing jobs
- High machine availability thanks to a fast response to machine faults (contract priority)
- Reduced downtime thanks to stored product, final destination and contract information
- RSC can be ordered for machine deliveries to numerous countries
- Worldwide service infrastruture with experienced service personnel

[1] Since the export of standard versions (components/system) is subject to a time-consuming official approval procedure, which applies in equal measure to the supply of such components for the purpose of servicing and spare parts supply, we offer **an export version** for individual components. This has usually less options than the standard version of the component and is not subject to an export authorization Please note the **information about export**.

© Siemens AG 2017

Overview

Data handling

To improve the service availability, Siemens Drive Technologies offers users the opportunity to register machines online and to save what is known as an identSNAPSHOT file. In addition to the component list and the software requirements of machines, this also includes information for machine manufacturers/and where relevant, dealers and end customers.

To simplify data handling, information about the final destination certificate can be saved using the XML function of identSNAPSHOT and transferred to Siemens using an online registration. This data can also be kept with the machine as data backup.

www.siemens.com/identsnapshot/register

Selection and ordering data

Description	Article No.
Repair service contract RSC For Siemens DF & PD components on production machines for countries in country groups 1 to 3	
• 12 month contract period [1]	**6FC8507-0RX12-■■■0**
• 24 month contract period [2]	**6FC8507-0RX24-■■■0**
Equipment value in €	↑
0,–	**0**
100000,–	**1**
200000,–	**2**
300000,–	**3**
400000,–	**4**
500000,–	**5**
600000,–	**6**
700000,–	**7**
800000,–	**8**
900000,–	**9**
	↑
0,–	**A**
10000,–	**B**
20000,–	**C**
30000,–	**D**
40000,–	**E**
50000,–	**F**
60000,–	**G**
70000,–	**H**
80000,–	**J**
90000,–	**K**
	↑
0,–	**A**
1000,–	**B**
2000,–	**C**
3000,–	**D**
4000,–	**E**
5000,–	**F**
6000,–	**G**
7000,–	**H**
8000,–	**J**
9000,–	**K**

Ordering example:
Contract period of 12 months and equipment value 96000.– €
6FC8507-0RX12-0KG0

[1] Max. 24 months from the transfer of risk (delivery of components).
[2] Max. 36 months from the transfer of risk (delivery of components).

© Siemens AG 2017

Overview

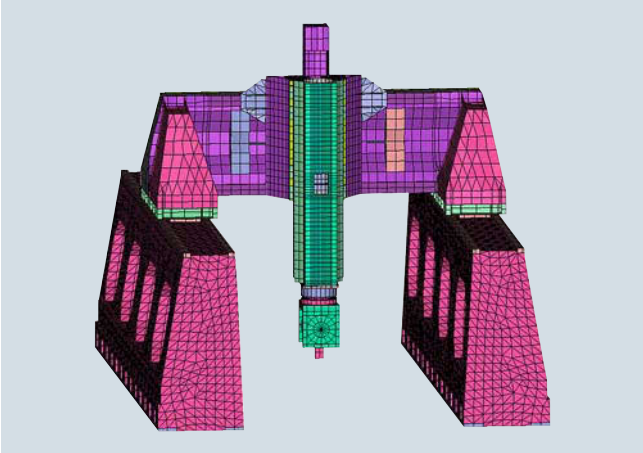

Achieve the optimum machine quicker and more efficiently with Mechatronic Support

The Mechatronic Support service ensures that already at the design stage of new machines, all the systems involved in mechanics, electronics, and IT are tested and optimized in a simulation environment in terms of their functionality and interaction, before they are actually built.

Mechatronic Support is thus the intelligent alternative to "trial and error". Innovative machine concepts are mutually compared, modified and optimized at the outset – a process which of course also takes account of your ideas for new mechatronic components.

Virtual simulation, real construction

With the help of the Mechatronic Support service, machinery ideas and new developments can be mechatronically tested and modified in a short time at low expense. The first real prototype can be built immediately afterwards as a functioning machine.

As the machine manufacturer, you have the benefit of shorter development phases and faster time-to-market; or as the end customer, you benefit from an optimized high-performance machine solution.

Benefits

- Shorter development times – shorter time to market
- Reliable achievement of development objectives
- Risk-free testing of innovative machine concepts
- Higher quality and productivity from the outset
- Get to the finished machine more quickly with specialist support

Selection and ordering data

Description	Type
Consultation Technical consultation with customer	**6FC5088-1....**
Machine analysis and optimization Analysis of the machine and its limits. Recommendations for manufacturer	**6FC5088-3....**
Machine simulation Simulation of individual axes and the dynamic response on the machine	**6FC5088-4....**

More information

Please contact your local Siemens sales office or representative for more information.

Contact information is available on the Internet at:

www.siemens.com/automation-contact

© Siemens AG 2017

Spare parts services during the lifecycle

Overview

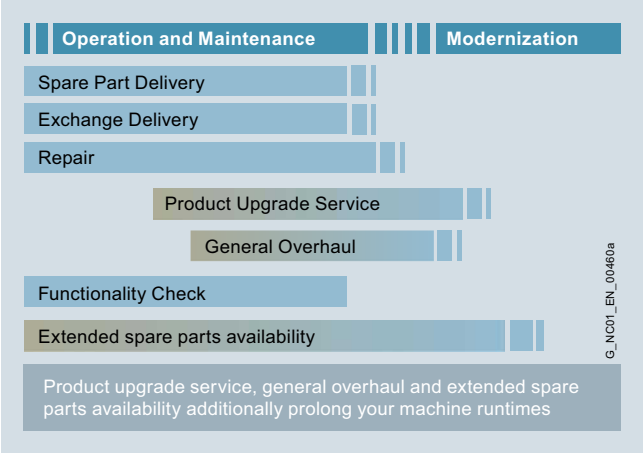

Spare parts services during the lifecycle

Siemens also provides constant support to customers after delivery of the machines or plant. This includes spare parts, repairs, as well as other supplementary services, and has a positive effect on machine operating times, inventories and costs.

When customers purchase a high-quality machine or plant, they intend to use it as intensively as possible, preferably for three shifts a day over many years. Under such circumstances, it is normal for parts to fail eventually. It is essential to replace the part as quickly as possible, because every hour of a plant stoppage costs money. To satisfy the multi-faceted requirements in the different areas, we have created comprehensive spare parts services.

Overview (continued)

You can sign up for the spare parts service that suits your requirements perfectly:

- Delivery of spare parts
- Delivery as exchange product
- Repair
- Product upgrade service
- General overhaul
- Function check
- Return of diagnostic parts
- Stock reduction of your spare parts store
- Extended spare parts availability

Benefits

- Optimum price/performance ratio and top quality
- Lifecycle management over the complete lifecycle
- Outstanding quality and availability of your machines and plant using Siemens original spare parts
- Global network and optimized logistics chains – 24 hours a day, 365 days a year
- Additional services from Siemens

More information

More information is available on the Internet at:

www.siemens.com/motioncontrol/spareparts

For further information, please approach your contact at your local Siemens office.

Contact information is available on the Internet at:

www.siemens.com/automation-contact

Delivery of spare parts

Overview

In every industry worldwide, plants and systems are required to operate with constantly increasing reliability. Lack of a specific spare part can result in considerable costs. We will provide you with the support you need to prevent a standstill from occurring in the first place: with a worldwide network and optimum logistics chains.

Ordering mode	Logistics service	Note
Standard	Cost-optimized: Contracted shipping company	Delivery within the normal national delivery times through the contracted shipping company
Plant stoppage	Time-optimized: Express, courier, collection	You choose the shortest possible delivery time for your own benefit: • Delivery by means of collection or courier service • Delivery by express service
Emergency service	Special logistics: Courier	You can also order the spare parts from us outside normal working hours, as well as on weekends or national holidays round-the-clock. Your delivery will arrive by courier

Benefits

- New liability for defects for the spare part
- Long-term spare parts availability
- Optimum system compatibility

© Siemens AG 2017

Delivery as exchange product

Overview

In addition to the simple delivery of spare parts, with many products, we also offer you the option of an exchange. This has the advantage that you not only receive the spare part quickly, but are able to return the defective device to us for a credit. You therefore receive our spare part at the lower exchange price.

A credit will be awarded on condition that the repair code indicates that repurchasing is admissible, a replacement is obtained from the spare parts store, and that the returned product is repairable.

The ordering mode and logistics service determine the delivery of spare parts:

Ordering mode	Logistics service	Note
Standard	Cost-optimized: Contracted shipping company	Delivery within the normal national delivery times through the contracted shipping company
Plant stoppage	Time-optimized: Express, courier, collection	You choose the shortest possible delivery time for your own benefit: • Delivery by means of collection or courier service • Delivery by express service
Emergency service	Special logistics: Courier	You can also order the spare parts from us outside normal working hours, as well as on weekends or national holidays round-the-clock. Your delivery will arrive by courier

Overview (continued)

Return

For returns, we require the following information:

- Reason for return
- If defective: detailed description of the fault
- Machine number
- Machine/system manufacturer
- End customer

We will then be able to provide you with additional information in the repair report/inspection report regarding the diagnosis/inspection as well as information about the completed repair.

Benefits

- Savings thanks to the option of returning defective parts
- A spare part is available immediately in the event of failure
- New liability for defects for the spare part
- Long-term spare parts availability
- Optimum system compatibility

Repair

Overview

Downtimes cause problems in the plant as well as unnecessary costs. We can help you to reduce both to a minimum – with our worldwide repair facilities. The advantage for you: Defects can be rectified before they cause further harm.

Repair is a favorable option when you have specific reasons for not replacing the defective device or part with a new one (delivery as exchange product).

We maintain a global network of Siemens repair shops and certified partners to ensure that we will always be able to process your repairs quickly.

We can offer you different types of repair depending on your requirements:

Normal repair

Normal repair at standard conditions normally takes 10 working days following receipt of the defective item at our repair shop.

Fast repair

In particularly urgent cases, we offer you the option of a fast repair within 1 or 2 working days for many products at additional cost.

Turnaround repair

With a turnaround repair, we organize on your behalf collection of the device/component to be repaired.

Mobile repair service

We come to you and perform the required repairs on site, for example, when the device/component cannot be removed due to its weight.

Overview (continued)

Function repair

A function repair is the same as a normal repair but excludes the repair of cosmetic defects, e.g. scratches, labels, discoloration. The conditions applicable to function repairs should be observed in this case.

For repairs, we require the following information:

- Reason for return
- If defective: detailed fault report
- Machine number
- Machine/system manufacturer
- End customer

Benefits

- Short downtimes for machines and plants
- Only certified original parts are used
- Additional services from Siemens:
  - Longer availability of your machine/plant through the preventive replacement of wear parts and aging parts
  - Highest standards of quality
  - Use of the comprehensive test concept of series production, including software, firmware, ASICs, complex function blocks, etc.
  - Implementation of all the hardware and software/firmware enhancements known by development, production, service and quality management departments, as well as suppliers
- Information supplied by repair report/inspection report

© Siemens AG 2017

Product upgrade service

Overview

Product upgrade service: From OLD to NEW

A long service life is expected from machines and plants. The service life of the electronic components is, however, limited and normally shorter than the planned machine/plant operating times. To ensure that the required extended availability of the machine/plant is achieved, we offer you the product upgrade service at an attractive price.

In the course of their lifecycle, electronic components are normally redesigned/upgraded several times. With the product upgrade service, you will always receive the latest technology.

Overview (continued)

A planned product upgrade from OLD to NEW helps to prevent unplanned machine stoppages and supports a safer and longer machine/plant availability. The upgrade service is mainly offered for older components that will soon be discontinued.

For information about potential upgrades from the latest upgrade list, please ask your regional Siemens contact.

Benefits

- Price benefit through upgrade service
- New liability for defects for the new component
- Extended availability of your machine/plant
- Prevention of component failures due to wear and aging
- Prevention of machine stoppages due to unavailability of spare parts
- Reduced spare parts inventories
- Latest technology
- Easier servicing due to fewer variants
- Industry Services through Siemens are assured for the future

General overhaul

Overview

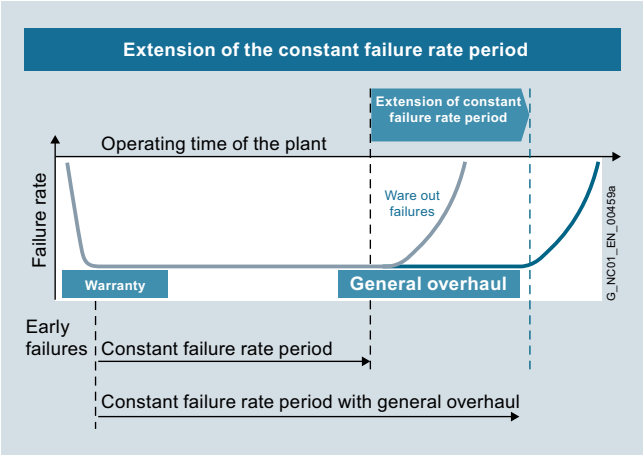

Extension of the period with a constant failure rate

A long service life is expected from machines and plants. The service life of electronic components and mechanical parts is, however, limited and normally shorter than the planned machine/plant operating times. For higher availability of the machines or plants, we offer a general overhaul (preventive maintenance) for electronic components and motors at favorable conditions.

Overview (continued)

During the planned general overhaul, wear parts and aging parts are replaced in accordance with their stated service life so as to reduce unplanned downtimes. In the case of motors, in addition to a general overhaul, replacement of bearings and encoders is also offered.

If a fault is detected during a general overhaul, troubleshooting and repair will be performed at the repair price without requesting confirmation or interrupting the process. In the case of extensive wear or damage, a general overhaul/repair will not be performed. A fixed lump sum for expenses will be charged in this case.

Benefits

- Preventive replacement of wear parts and aging parts in accordance with their stated service life
- Reduction in unplanned plant stoppages
- Enhanced production reliability
- Extended availability of your machine/plant
- New liability for defects for 12 months for the components subjected to a general overhaul
- Low price

© Siemens AG 2017

Function check

Overview

It is checked that the components function reliably.

The first step involves cleaning the component. Then all the hardware and software/firmware enhancements are implemented that are known by development, production, service and quality management departments, as well as suppliers. Using the comprehensive test concept of series production, all the functions of the software, firmware, ASICs, complex and less complex function blocks are checked.

If a fault is detected during the function check, troubleshooting and repair will be performed at the repair price without requesting confirmation or interrupting the process. In the case of extensive wear or damage, no repairs will be performed. A fixed lump sum for expenses will be charged.

Benefits

- The component is checked and can be deployed again
- The component contains all the known improvements
- The customer's own spare parts stock is up-to-date
- Low price

Return of diagnostic parts

Overview

Spare parts used for diagnostic purposes from the spare parts store can be returned within 3 months and a credit note for up to 85 % is issued.

For unused spare parts in their original packaging, you will receive a credit of 100 % in which case you will be charged a fixed price for handling.

Benefits

- Can be used for diagnostics
- Reduced spare parts inventories
- Low costs

© Siemens AG 2017

Stock reduction in spare parts store

Overview

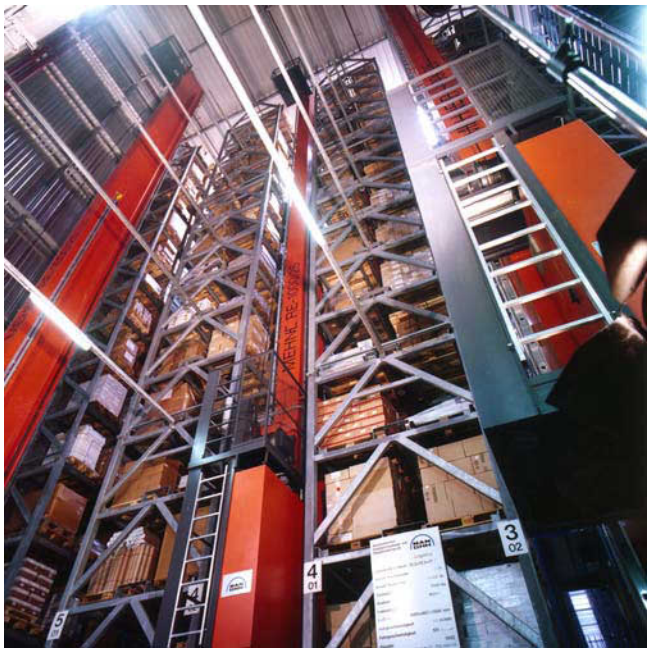

Thanks to fast delivery of spare parts from Siemens, manufacturers and plant operators are able to reduce their spare parts inventories. Siemens offers an analysis for this purpose to indicate exactly which parts must be available in the customer's stores for a specific combination of machines and which should be obtained directly from Siemens.

Benefits

- Reduced costs
- Stock optimization
- Minimization of fault downtimes

Extended spare part availability

Overview

We normally retain spare parts for all products and systems for a period of 10 years after discontinuation of product marketing.

In individual cases, when we do not carry spare parts, we will offer a repair.

For a wide range of products and systems, we extend the availability of spare parts. We can provide you with the current spare parts availability for your machine/plant as a service once you have registered online with identSNAPSHOT.

www.siemens.com/identsnapshot/register

If you require longer availability of spare parts, please contact your regional sales representative.

Benefits

- Higher plant availability
- Investment protection
- Reduction of lifecycle costs

© Siemens AG 2017

Overview

Spares on Web – Identification of spare parts on the Internet

Spares on Web is a web-based tool for identifying spare parts. After you have entered the Article No. and serial number, the spare parts available for the respective unit are displayed.

www.siemens.com/sow

© Siemens AG 2017

Overview

mySupport documentation – Compiling personal documents

mySupport documentation is a web-based system for generating personalized documentation based on standard documents and is part of the Siemens Industry Online Support portal.

In mySupport, a personal document library can be created in the "Documentation" category. This library can be accessed online in mySupport or also be generated in various formats for offline use.

Previously, this functionality was available in the My Documentation Manager for configurable manuals. Due to the integration in mySupport, all entries of the Industry Online Support can now be imported into the personal document library, including FAQs or product notifications.

If you have already worked with the My Documentation Manager, all of the previously created libraries will continue to be available without restrictions in mySupport.

In addition, the personal library in mySupport can be shared with other mySupport users. In this way, a collection of relevant documents can be created very effectively and used together with other mySupport users all over the world.

You must register/log in for configuring and generating/managing.

Benefits

- Display
  View, print or download standard documents or personalized documents
- Configure
  Transfer standard documents or parts of them to personalized documents
- Generate/Manage
  Generate and manage personalized documents in the formats PDF, RTF or XML in all available languages

Function

Opening mySupport documentation in the Industry Online Support portal

- About the product support, entry type "Manual":
  https://support.industry.siemens.com/cs/ww/en/ps/man
  By clicking on the required version of the manual and then "Show and configure", the manual opens in a modular view, where you can navigate from topic to topic. Here the direct link to a topic can be used and made available to other users. The selected document can be added to the personal library via "mySupport Cockpit" > "Add to mySupport documentation".
- Via the direct link
  https://support.industry.siemens.com/my/ww/en/documentation/advanced
  After logon/registration, the online help is displayed as the current document.

More information

You can find additional information on the Internet at

- https://support.industry.siemens.com/my/ww/en/documentation
- https://support.industry.siemens.com/cs/helpcenter/en/index.htm?#persoenliche_bibliothek_aufbauen.htm

© Siemens AG 2017

Overview

A high-quality programmable control or drive system can be used to maximum effect only if the user is aware of the performance of the products used as a result of intensive training and good technical documentation.

This is becoming more important due to the shorter innovation cycles of modern automation products and the convergence of electronics and mechanical engineering.

A comprehensive range of documentation is available which includes a Getting Started guide, operating instructions, installation manuals and a list manual.

The documents are available in hardcopy form or as a PDF file for downloading from the Internet.

Information and documentation relating to SINUMERIK, SINAMICS, SIMOTION and SIMOTICS are available on the Internet at
https://support.industry.siemens.com/cs/document/109476679

In addition to many other useful documents, the Information and Download Center also contains catalogs about the following systems:

- SINUMERIK: NC 62, NC 81.1, NC 82
- SINAMICS: D 11, D 12, D 21.3, D 21.4, D 23.1, D 23.2, D 31, D 35
- SIMOTION: PM 21
- SIMOTICS: D 41, D 81.1, D 81.8, D 83.1

You can download these catalogs in PDF format – you don't need to log in. You can perform a targeted search using the filter box above the first displayed catalog. By entering the search term "NC 8", for example, you can locate Catalog NC 81.1 and Catalog NC 82, and by entering "ST 70" you will find Catalog ST 70 as well as the relevant news and add-ons (if available).
www.siemens.com/industry/infocenter

Application

Explanations of the manuals:

- **Operating Instructions**
  contain all the information needed to install the device and make electrical connections, information about commissioning and a description of the inverter functions.
  Phases of use: Control cabinet construction, commissioning, operation, maintenance and servicing.
- **Hardware Installation Manual**
  contains all relevant information about the intended use of the components of a system (technical specifications, interfaces, dimensional drawings, characteristics, or possible applications), information about installation and electrical connections and information about maintenance and servicing.
  Phases of use: Control cabinet configuration/construction, maintenance and servicing.
- **Operating and Installation Instructions** (for inverter and accessories)
  contain all relevant information about the intended use of the components, such as technical specifications, interfaces, dimensional drawings, characteristics, or possible applications.
  Phases of use: Control cabinet configuration/construction.
- **Manual/Configuration Manual**
  contains all necessary information about the intended use of the components of a system, e.g. technical specifications, interfaces, dimensional drawings, characteristics, or possible applications.
  Phases of use: Cabinet configuration/setup, circuit diagram configuration/drawing.
- **Commissioning Manual**
  contains all information relevant to commissioning after installation and wiring. It also contains all safety and warning notices relevant to commissioning in addition to overview drawings.
  Phases of use: Commissioning of components that have already been connected, configuration of system functions.
- **List Manual**
  contains all parameters, function diagrams, and faults/alarms for the product/system as well as their meanings and setting options. It contains parameter data and fault/alarm descriptions with functional correlations.
  Phases of use: Commissioning of components that have already been connected, configuration of system functions, fault cause/diagnosis.
- **Getting Started**
  provides information about getting started for the first-time user as well as references to additional information. It contains information about the basic steps to be taken during commissioning. The information in the other documentation should be carefully observed for all of the other work required.
  Phases of use: Commissioning of components that have already been connected.
- **Function Manual Drive Functions**
  contains all the relevant information about individual drive functions: Description, commissioning and integration in the drive system.
  Phases of use: Commissioning of components that have already been connected, configuration of system functions.

Information is available in the following formats

- Paper version, printed copy
- PDF file available online

Information and documentation of SINUMERIK, SINAMICS, SIMOTION and SIMOTICS are available online at
www.siemens.com/motioncontrol/docu

Please send any queries or suggestions to
docu.motioncontrol@siemens.com

Selection and ordering data

Description	Article No.
Decentralization with PROFIBUS DP/DPV1	Via bookstore
• German	**ISBN 978-3-89578-189-6**
• English	**ISBN 978-3-89578-218-3**
Automating with PROFINET: Industrial Communication based on Industrial Ethernet	Via bookstore
• German	**ISBN 978-3-89578-293-0**
• English	**ISBN 978-3-89578-294-7**
Configuration Manual EMC Installation Guidelines SIMOCRANE, SIMOTICS, SIMOTION, SINAMICS, SINUMERIK	
• German	**6FC5297-0AD30-0AP3**
• English	**6FC5297-0AD30-0BP3**
• Italian	**6FC5297-0AD30-0CP3**
• French	**6FC5297-0AD30-0DP3**
• Spanish	**6FC5297-0AD30-0EP3**
• Chinese Simplified	**6FC5297-0AD30-0RP3**

© Siemens AG 2017

Overview

Description	Article No.
Manual SINAMICS S120 Control Units and Additional System Components	
• German	**6SL3097-4AH00-0AP6**
• English	**6SL3097-4AH00-0BP6**
• Italian	**6SL3097-4AH00-0CP6**
• French	**6SL3097-4AH00-0DP6**
• Spanish	**6SL3097-4AH00-0EP6**
• Russian	**6SL3097-4AH00-0PP6**
• Chinese Simplified	**6SL3097-4AH00-0RP6**
• Japanese	**6SL3097-4AH00-0TP4**
Manual SINAMICS S120 Booksize Power Units	
• German	**6SL3097-4AC00-0AP8**
• English	**6SL3097-4AC00-0BP8**
• Italian	**6SL3097-4AC00-0CP8**
• French	**6SL3097-4AC00-0DP8**
• Spanish	**6SL3097-4AC00-0EP8**
• Russian	**6SL3097-4AC00-0PP8**
• Chinese Simplified	**6SL3097-4AC00-0RP8**
• Japanese	**6SL3097-4AC00-0TP6**
Manual SINAMICS S120 Booksize Power Units C/D types	
• German	**6SL3097-4AC20-0AP0**
• English	**6SL3097-4AC20-0BP0**
• Italian	**6SL3097-4AC20-0CP0**
• French	**6SL3097-4AC20-0DP0**
• Spanish	**6SL3097-4AC20-0EP0**
• Chinese Simplified	**6SL3097-4AC20-0RP0**
Manual SINAMICS S120 Chassis Power Units	
• German	**6SL3097-4AE00-0AP5**
• English	**6SL3097-4AE00-0BP5**
• Italian	**6SL3097-4AE00-0CP5**
• French	**6SL3097-4AE00-0DP5**
• Spanish	**6SL3097-4AE00-0EP5**
• Russian	**6SL3097-4AE00-0PP5**
• Chinese Simplified	**6SL3097-4AE00-0RP5**
Manual Chassis Power Units Liquid-Cooled	
• German	**6SL3097-4AM00-0AP7**
• English	**6SL3097-4AM00-0BP7**
• Italian	**6SL3097-4AM00-0CP7**
• French	**6SL3097-4AM00-0DP7**
• Spanish	**6SL3097-4AM00-0EP7**
• Russian	**6SL3097-4AM00-0PP7**
• Chinese Simplified	**6SL3097-4AM00-0RP7**
Function Manual SINAMICS S120 Drive Functions	
• German	**6SL3097-4AB00-0AP5**
• English	**6SL3097-4AB00-0BP5**
• Italian	**6SL3097-4AB00-0CP5**
• French	**6SL3097-4AB00-0DP5**
• Spanish	**6SL3097-4AB00-0EP5**
• Portuguese	**6SL3097-4AB00-0KP5**
• Russian	**6SL3097-4AB00-0PP5**
• Chinese Simplified	**6SL3097-4AB00-0RP5**

Description	Article No.
Commissioning Manual with STARTER SINAMICS S120	
• German	**6SL3097-4AF00-0AP5**
• English	**6SL3097-4AF00-0BP5**
• Italian	**6SL3097-4AF00-0CP5**
• French	**6SL3097-4AF00-0DP5**
• Spanish	**6SL3097-4AF00-0EP5**
• Russian	**6SL3097-4AF00-0PP5**
• Chinese Simplified	**6SL3097-4AF00-0RP5**
Function Manual SINAMICS S120 Safety Integrated	
• German	**6SL3097-4AR00-0AP6**
• English	**6SL3097-4AR00-0BP6**
• Italian	**6SL3097-4AR00-0CP6**
• French	**6SL3097-4AR00-0DP6**
• Spanish	**6SL3097-4AR00-0EP6**
• Russian	**6SL3097-4AR00-0PP6**
• Chinese Simplified	**6SL3097-4AR00-0RP6**
Manual SINAMICS S120 AC Drive	
• German	**6SL3097-4AL00-0AP5**
• English	**6SL3097-4AL00-0BP5**
• Italian	**6SL3097-4AL00-0CP5**
• French	**6SL3097-4AL00-0DP5**
• Spanish	**6SL3097-4AL00-0EP5**
• Chinese Simplified	**6SL3097-4AL00-0RP5**
• Japanese	**6SL3097-4AL00-0TP5**
List Manual SINAMICS S120 / SINAMICS S150	
• German	**6SL3097-4AP00-0AP8**
• English	**6SL3097-4AP00-0BP8**
• Italian	**6SL3097-4AP00-0CP8**
• French	**6SL3097-4AP00-0DP8**
• Spanish	**6SL3097-4AP00-0EP8**
• Portuguese	**6SL3097-4AP00-0KP8**
• Russian	**6SL3097-4AP00-0PP8**
• Chinese Simplified	**6SL3097-4AP00-0RP8**
• Japanese	**6SL3097-4AP00-0TP8**
Getting Started with STARTER SINAMICS S120	
• German	**6SL3097-4AG00-0AP4**
• English	**6SL3097-4AG00-0BP4**
• Italian	**6SL3097-4AG00-0CP4**
• French	**6SL3097-4AG00-0DP4**
• Spanish	**6SL3097-4AG00-0EP4**
• Russian	**6SL3097-4AG00-0PP4**
• Chinese Simplified	**6SL3097-4AG00-0RP4**
Manual SINAMICS S120 Distributed Drive Technology	
• German	**6SL3097-4AW00-0AP3**
• English	**6SL3097-4AW00-0BP3**
• Italian	**6SL3097-4AW00-0CP3**
• French	**6SL3097-4AW00-0DP3**
• Spanish	**6SL3097-4AW00-0EP3**
• Chinese Simplified	**6SL3097-4AW00-0RP3**

© Siemens AG 2017

Motor documentation

Overview

Description	Article No.
Configuration Manual 1FT7 Synchronous Motors	
• German	**6SN1197-0AD13-0AP5**
• English	**6SN1197-0AD13-0BP5**
Configuration Manual 1FK7 Synchronous Motors	
• German	**6SN1197-0AD16-0AP4**
• English	**6SN1197-0AD16-0BP4**
• Italian	**6SN1197-0AD16-0CP4**
• French	**6SN1197-0AD16-0DP4**
• Spanish	**6SN1197-0AD16-0EP4**
• Russian	**6SN1197-0AD16-0PP0**
• Chinese Simplified	**6SN1197-0AD16-0RP4**
Configuration Manual SIMOTICS M-1PH8 Main Motors	
• German	**6SN1197-0AD74-0AP2**
• English	**6SN1197-0AD74-0BP1**
• Italian	**6SN1197-0AD74-0CP1**
• French	**6SN1197-0AD74-0DP1**
• Spanish	**6SN1197-0AD74-0EP1**
• Chinese Simplified	**6SN1197-0AD74-0RP1**
Configuration Manual 1FE1 Synchronous Built-In Motors	
• German	**6SN1197-0AC01-0AP0**
• English	**6SN1197-0AC01-0BP0**
Configuration Manual 1FN3 Linear Motors	
• German	**6SN1197-0AB86-0AP1**
• English	**6SN1197-0AB86-0BP1**

Description	Article No.
Configuration Manual 1FN6 Linear Motors	
• German	**6SN1197-0AB78-0AP3**
• English	**6SN1197-0AB78-0BP3**
• Italian	**6SN1197-0AD78-0CP3**
• French	**6SN1197-0AD78-0DP3**
• Chinese Simplified	**6SN1197-0AD78-0RP3**
Configuration Manual 1FW3 Complete Torque Motors	
• German	**6SN1197-0AD70-0AP8**
• English	**6SN1197-0AD70-0BP8**
Configuration Manual 1FW6 Built-in Torque Motors	
• German	**6SN1197-0AE00-0AP7**
• English	**6SN1197-0AE00-0BP7**
Configuration Manual 1FW6 Naturally Cooled Built-in Torque Motors	
• German	**6SN1197-0AE01-0AP2**
• English	**6SN1197-0AE01-0BP2**
• Italian	**6SN1197-0AE01-0CP2**
• French	**6SN1197-0AE01-0DP2**
• Spanish	**6SN1197-0AE01-0EP2**
• Chinese Simplified	**6SN1197-0AE01-0RP2**

Measuring systems documentation

Overview

Description	Article No.
User Manual Absolute Value Encoder with PROFIBUS DP	
• German	**6SN1197-0AB10-0AP5**
• English	**6SN1197-0AB10-0BP5**

© Siemens AG 2017

Appendix

16/2	Certificates of suitability
16/4	Software licenses
16/6	Subject index
16/10	Article number index
16/27	Conversion tables
16/29	Metal surcharges
16/32	Conditions of sale and delivery

The glossary for the SINAMICS S120 drive system can be found in the Internet under: https://mall.industry.siemens.com/mall/en/Catalog/Products/10314535

© Siemens AG 2017

Certificates of suitability (approvals)

Overview

Many of the products in this Catalog fulfill requirements, e.g., for UL, CSA, and FM, and are labeled with the corresponding approval designation.

All certificates of suitability, approvals, certificates, declarations of conformity, test certificates, e.g., CE, UL, Safety Integrated, etc., have been performed with the associated system components as they are described in the Catalogs and Configuration Manuals.

The certificates are only valid if the products are used with the described system components, are installed according to the Installation Guidelines and are used for their intended purpose.

In other cases, the vendor of these products is responsible for arranging for new certificates to be issued.

Test symbol	Tested by	Device series/ Component	Test standard	Product category/ File No.
UL: Underwriters Laboratories ***Independent public testing body in North America***				
	UL according to UL standard	SINUMERIK	Standard: UL 508, CSA C22.2 No. 142	NRAQ/7.E164110 NRAQ/7.E217227
		SIMOTION	Standard: UL 508, CSA C22.2 No. 142	NRAQ/7.E164110
	UL according to CSA standard UL according to UL and CSA standards	SINAMICS	Standard: UL 508, 508C, 61800-5-1 CSA C22.2 No. 142, 274	NRAQ/7.E164110, NMMS/2/7/8.E192450, NMMS/2/7/8.E203250, NMMS/7.E214113, NMMS/7.E253831 NMMS/2/7/8.E121068 NMMS/7.E355661 NMMS/7.E323473
	UL according to UL standard	SIMODRIVE	Standard: UL 508C, CSA C22.2 No. 274	NMMS/2/7/8.E192450 NMMS/7.E214113
	UL according to CSA standard UL according to UL and CSA standards	Motors	Standard: UL 1004-1, 1004-6, 1004-8, CSAC22.2 No.100	PRGY2/8.E227215 PRHZ2/8.E93429 PRHJ2/8.E342747 PRGY2/8.E253922 PRHZ2/8.E342746
		Line/motor reactors	Standard: UL 508, 506, 5085-1, 5085-2, 1561, CSA C22.2 No. 14, 47, 66.1-06, 66.2-06	XQNX2/8.E257859 NMTR2/8.E219022 NMMS2/8.E333628 XPTQ2/8.E257852 XPTQ2/8.E103521 NMMS2/8.E224872 XPTQ2/8.E354316 XPTQ2/8.E198309 XQNX2/8.E475972
		Line filters, dv/dt filters, sine-wave filters	UL 1283, CSA C22.2 No. 8	FOKY2/8.E70122
		Resistors	UL 508, 508C, CSA C22.2 No. 14, 274	NMTR2/8.E224314 NMMS2/8.E192450 NMTR2/8.E221095 NMTR2/8.E226619
TUV: TUV Rheinland of North America Inc. ***Independent public testing body in North America, Nationally Recognized Testing Laboratory (NRTL)*** ***TÜV: TÜV SÜD Product Service*** ***Independent public testing body in Germany, Nationally Recognized Testing Laboratory (NRTL) for North America***				
	TUV according to UL and CSA standards	SINAMICS	NRTL listing according to standard UL 508C	U7V 12 06 20078 013 U7 11 04 20078 009 U7 11 04 20078 010 U7 11 04 20078 011
		SIMOTION	NRTL listing according to standard UL 508	U7V 13 03 20078 01
		SIMODRIVE	NRTL listing according to standard UL 508C, CSA C22.2. No. 14	CU 72090702
		Motion Control Encoder	NRTL listing according to UL 61010-1 CSA C22.2 No. 61010-1	U8V 10 06 20196 024

© Siemens AG 2017

Overview (continued)

Test symbol	Tested by	Device series/ Component	Test standard	Product category/ File No.
CSA: Canadian Standards Association Independent public testing body in Canada				
	CSA according to CSA standard	SINUMERIK	Standard: CSA C22.2 No. 142	2252-01 : LR 102527
FMRC: Factory Mutual Research Corporation Independent public testing body in North America				
	FM according to FM standard	SINUMERIK	Standard: FMRC 3600, FMRC 3611, FMRC 3810, ANSI/ISA S82.02.1	–
EAC: Ivanovo Certificate Independent public testing body in the Russian Federation				
	EAC in accordance with the EAC Directive	SINAMICS SINUMERIK SIMOTION	Standard: IEC 61800-5-1/-2, IEC 61800-3	–
RCM: Australian Communications and Media Authority Independent public testing body in Australia				
	RCM according to EMC standard	SINAMICS SINUMERIK SIMOTION	Standard: IEC AS 61800-3, EN 61800-3	–
KC: National Radio Research Agency Independent public testing body in South Korea				
	KC according to EMC standard	SINAMICS SINUMERIK SIMOTION	Standard: KN 11	–
BIA Federal Institute for Occupational Safety				
–	Functional safety	SINAMICS SINUMERIK SIMOTION	Standard: EN 61800-5-2	–
TÜV SÜD Rail				
–	Functional safety	SINAMICS SINUMERIK SIMOTION	Standard: EN 61800-5-2	–

More information about certificates can be found online at:
https://support.industry.siemens.com/cs/ww/en/ps/cert

© Siemens AG 2017

Software licenses

Overview

Software types

Software requiring a license is categorized into types.
The following software types have been defined:

- Engineering software
- Runtime software

Engineering software

This includes all software products for creating (engineering) user software, e.g. for configuring, programming, parameterizing, testing, commissioning or servicing.

Data generated with engineering software and executable programs can be duplicated for your own use or for use by third-parties free-of-charge.

Runtime software

This includes all software products required for plant/machine operation, e.g. operating system, basic system, system expansions, drivers, etc.

The duplication of the runtime software and executable programs created with the runtime software for your own use or for use by third-parties is subject to a charge.

You can find information about license fees according to use in the ordering data (e.g. in the catalog). Examples of categories of use include per CPU, per installation, per channel, per instance, per axis, per control loop, per variable, etc.

Information about extended rights of use for parameterization/configuration tools supplied as integral components of the scope of delivery can be found in the readme file supplied with the relevant product(s).

License types

Siemens Industry Automation & Drive Technologies offers various types of software license:

- Floating license
- Single license
- Rental license
- Rental floating license
- Trial license
- Demo license
- Demo floating license

Floating license

The software may be installed for internal use on any number of devices by the licensee. Only the concurrent user is licensed. The concurrent user is the person using the program. Use begins when the software is started.
A license is required for each concurrent user.

Single license

Unlike the floating license, a single license permits only one installation of the software per license.

The type of use licensed is specified in the ordering data and in the Certificate of License (CoL). Types of use include for example per instance, per axis, per channel, etc.

One single license is required for each type of use defined.

Rental license

A rental license supports the "sporadic use" of engineering software. Once the license key has been installed, the software can be used for a specific period of time (the operating hours do not have to be consecutive).
One license is required for each installation of the software.

Rental floating license

The rental floating license corresponds to the rental license, except that a license is not required for each installation of the software. Rather, one license is required per object (for example, user or device).

Trial license

A trial license supports "short-term use" of the software in a non-productive context, e.g. for testing and evaluation purposes. It can be transferred to another license.

Demo license

The demo license support the "sporadic use" of engineering software in a non-productive context, for example, use for testing and evaluation purposes. It can be transferred to another license. After the installation of the license key, the software can be operated for a specific period of time, whereby usage can be interrupted as often as required.

One license is required per installation of the software.

Demo floating license

The demo floating license corresponds to the demo license, except that a license is not required for each installation of the software. Rather, one license is required per object (for example, user or device).

Certificate of license (CoL)

The CoL is the licensee's proof that the use of the software has been licensed by Siemens. A CoL is required for every type of use and must be kept in a safe place.

Downgrading

The licensee is permitted to use the software or an earlier version/release of the software, provided that the licensee owns such a version/release and its use is technically feasible.

Delivery versions

Software is constantly being updated.
The following delivery versions

- PowerPack
- Upgrade

can be used to access updates.

Existing bug fixes are supplied with the ServicePack version.

PowerPack

PowerPacks can be used to upgrade to more powerful software. The licensee receives a new license agreement and CoL (Certificate of License) with the PowerPack. This CoL, together with the CoL for the original product, proves that the new software is licensed.
A separate PowerPack must be purchased for each original license of the software to be replaced.

Upgrade

An upgrade permits the use of a new version of the software on the condition that a license for a previous version of the product is already held.
The licensee receives a new license agreement and CoL with the upgrade. This CoL, together with the CoL for the previous product, proves that the new version is licensed.
A separate upgrade must be purchased for each original license of the software to be upgraded.

© Siemens AG 2017

Overview

ServicePack

ServicePacks are used to debug existing products. ServicePacks may be duplicated for use as prescribed according to the number of existing original licenses.

License key

Siemens Industry Automation & Drive Technologies supplies software products with and without license keys.

The license key serves as an electronic license stamp and is also the "switch" for activating the software (floating license, rental license, etc.).

The complete installation of software products requiring license keys includes the program to be licensed (the software) and the license key (which represents the license).

Software Update Service (SUS)

As part of the SUS contract, all software updates for the respective product are made available to you free of charge for a period of one year from the invoice date. The contract will automatically be extended for one year if it is not canceled three months before it expires.

The possession of the current version of the respective software is a basic condition for entering into an SUS contract.

You can download explanations concerning license conditions from www.siemens.com/automation/salesmaterial-as/catalog/en/terms_of_trade_en.pdf

© Siemens AG 2017

Subject index

Page

A

Absolute encoder 8/11, 11/7
Activation of the integrated safety functions....3/9
Active Interface Modules
- Booksize format....7/35
- Chassis format, air-cooled....7/129
- Chassis format, liquid-cooled....7/179

Active Line Modules
- Booksize format....7/30
- Chassis format, air-cooled....7/124
- Chassis format, liquid-cooled....7/175

Advanced Technology Functions 2/5
Air-cooled Power Modules, blocksize format 7/238
Air-cooled units, chassis format....7/115
AM600 Adapter Module....7/108
AM600....7/108
Applications & Branch know-how....2/6
Applications 15/9
Article number codes for power cables 12/33

B

Basic Drive Functions 2/2
Basic Functions and Extended Functions 3/9
Basic Line Filters for Active Line Modules, booksize format 7/39
Basic Line Modules
- Booksize format....7/54
- Chassis format, air-cooled....7/140
- Chassis format, liquid-cooled....7/183

Basic positioner EPos 2/4, 6/2
Blocksize format 7/238
Booksize format 7/28
BOP20 Basic Operator Panel 7/19
BOP20....7/19
Brakes
- for SIMOTICS M....9/86
- for SIMOTICS S 8/52

Braking Modules
- Booksize compact format....7/93
- Booksize format....7/95
- Chassis format....7/212

Braking resistors
- for blocksize format....7/97, 7/267
- for chassis format....7/216

Built-in holding brakes for SIMOTICS S....8/52
Built-in motors for SIMOTICS M 9/87
Built-in torque motors....10/18
Built-on rotary encoders 11/2

Page

C

CA 01....13/2
Cabinet Modules 7/6
CAD CREATOR....13/4
CANopen....5/10
Capacitor Module, booksize format 7/99
CBC10 ....7/25
CBE20 ....7/24
Characteristic curves for MOTION-CONNECT 800PLUS....12/5
Chassis format....7/111
Clamps for built-on rotary encoders....11/13
Clearances 13/45
Commissioning SINAMICS S120 in the TIA Portal 13/8
Common Engineering....2/6
Communication Board
- CBC10....7/25
- CBE20 ....7/24

Communication overview 5/2
CompactFlash card
- for CU320-2 Control Unit....7/16
- for CU310-2 Control Unit....7/12

Complete torque motors....10/36
Connection overviews 12/37
Control cabinets 15/15
Control Supply Module, booksize format 7/100
Control Unit Adapter
- CUA31....7/20
- CUA32....7/22

Control Units 7/8
- CU310-2 for single-axis drives....7/11
- CU320-2....7/15

Conversion tables....16/27
Converting, drive applications 14/10
Cooling methods 7/4
Couplings for built-on rotary encoders....11/13
CU310-2 for single-axis drives 7/11
CU320-2 ....7/15
CUA31 ....7/20
CUA32 ....7/22
Current carrying capacity for power and signal cables....12/6

© Siemens AG 2017

Page

D

DC link adapters for booksize and booksize compact format 7/102
DC link components
- for booksize format 7/93
- for chassis format 7/212

DC link components for chassis format 7/218
DCB Extension license 13/7
DCB Extension license 13/7
DCB Studio V1.2 ....13/7
DCC 13/7
Delivery as exchange product 15/22
Delivery of spare parts 15/21
Derating factors for power and signal cables 12/6
Dimensional drawings
- for SIMOTICS linear and torque motors 10/52
- for SIMOTICS main motors 9/102
- for SIMOTICS servomotors 8/66

DMC20 ....7/279
DME20 ....7/280
Documentation 15/28
- Measuring systems 15/30
- Motors 15/30
- SINAMICS S120 ....15/29

Double Motor Modules
- Booksize compact format 7/80
- Booksize format 7/86

Drive ES engineering software 13/10
Drive ES 13/10
Drive selection 1/7
Drive Technology Configurator 13/2
DRIVE-CliQ
- Cabinet bushing 12/55
- Coupler 12/56
- DMC20 Hub Module 7/279
- DME20 Hub Module 7/280
- Extension 7/108
- Signal cables 12/23

DRIVE-CliQ signal cables 12/23
DT Configurator 13/2
dv/dt filters compact plus VPL for chassis format 7/229
dv/dt filters plus VPL for chassis format 7/224

E

EMC notes for the application of the product standard EN 61800-3 ....13/13
Encoder system connection 7/299
Encoder systems 8/10
Energy-efficient drives 4/3
Energy-saving functions for SINAMICS drives, overview 4/4
Engineering notes 13/12
Engineering Tools 13/2
EPos 2/4, 6/2
EtherNet/IP 5/10
Excellence in Motion Control 1/2
Extended Functions and Basic Functions 3/9
Extended spare part availability 15/25

F

Field and Maintenance Services 15/7
First environment 13/13
Formats 7/5
Function check 15/24
Function module basic positioner EPos 6/2

G

General documentation 15/28
General overhaul 15/23
General technical specifications, booksize format 7/28

H

Hall-effect sensor box 10/16
Heat dissipation 13/45
HF (high-frequency) clamp 12/54
Holding brakes
- for SIMOTICS M 9/86
- for SIMOTICS S 8/52

Hybrid Cabinet Bushing 7/108
Hybrid cables for SINAMICS S120M 7/108, 12/7

I

IDS 4
Incremental encoders 8/12, 11/4
Industrial Ethernet 5/9
Industry Services – Portfolio overview 15/6
Industry Services 15/5
Information and Download Center 15/4
Information and Ordering Options on the Internet and DVD 15/3
Integrated Drive System 4
Integrated Web server 13/9
Interactive Catalog CA 01 ....13/2

L

Length codes 12/36
Line filters
- for Basic Line Modules, booksize format 7/62
- for blocksize format 7/260
- for chassis format 7/198
- for Smart Line Modules, booksize format 7/52

Line reactors
- for Basic Line Modules, booksize format 7/61
- for blocksize format 7/262
- for chassis format 7/202
- for Smart Line Modules, booksize format 7/51

Line-side power components for chassis format 7/197
Linear measuring systems 10/17
Liquid cooling for SIMOTICS M-1PH8/M-1FE 9/101
Liquid-cooled units, chassis format 7/163
Long motor cables 13/32

© Siemens AG 2017

Subject index

Page

M

Mechanical configuration of the drive system 13/42
Mechatronic Support 15/20
Minimum clearances 13/45
Mobile Media 15/4
Modbus TCP 5/10
MOTION-CONNECT 500 ..... 12/4
MOTION-CONNECT 800PLUS 12/4
MOTION-CONNECT connection system 1/16
MOTION-CONNECT connection system 1/6
Motor Modules
- Booksize and booksize compact format 7/64
- Chassis format, air-cooled 7/145
- Chassis format, liquid-cooled 7/187

Motor reactors
- for booksize format 7/103
- for chassis format 7/220

Motor selection 13/28
Motor-side power components
- for booksize format 7/103
- for chassis format 7/220

Mounted holding brakes for SIMOTICS M 9/86
Mounting device 7/162
Mounting flange 12/54
mySupport-Documentation 15/27

O

OALINK 6/4
Online Services 15/3
Online Support App 15/8
Online Support 15/8
Optoelectronic rotary encoders 11/2
Output reactors for blocksize format 7/273
Overview of energy-saving functions for SINAMICS drives 4/4

P

Parallel connection of power units 13/34
Partner at Siemens 15/2
Planetary gearbox 8/53
Planning 13/12
Plant Data Services 15/6
Point-to-point connection between two CUs with SINAMICS Technology Extension OALINK 6/4
POLYGON 6/4
Power cables 12/7
Power connectors 12/53
Power Modules
- Blocksize format 7/238
- Chassis format, air-cooled 7/120
- Chassis format, liquid-cooled 7/171

Power units 13/29
Product upgrade service 15/23
PROFIBUS 5/8
PROFIdrive 5/7
PROFINET 5/3
PROFIsafe 3/9
Push-through mounting frame for blocksize format 7/277

Page

R

Recommended line-side components
- for Active Line Modules, booksize format 7/40
- for Basic Line Modules, booksize format 7/63
- for blocksize format 7/265
- for chassis format 7/206
- for Smart Line Modules, booksize format 7/53

Repair service contract RSC 15/17
Repair Services 15/7
Repair 15/22
Resolver 8/13
Retrofit and Modernization Services 15/7
Return of diagnostic parts 15/24
RSC 15/17

S

Safe Brake Adapter SBA for chassis format 7/236
Safe Brake Control (SBC) 3/6
Safe Brake Relay for blocksize format 7/278
Safe Brake Test (SBT) 3/6
Safe Direction (SDI) 3/8
Safe Operating Stop (SOS) 3/5
Safe Position (SP) 3/9
Safe Speed Monitor (SSM) 3/7
Safe speed/position sensing 3/10
Safe Stop 1 (SS1) 3/4
Safe Stop 2 (SS2) 3/5
Safe Torque Off (STO) 3/4
Safely-Limited Position (SLP) 3/8
Safely-Limited Speed (SLS) 3/7
Safety functions integral to the SINAMICS drives 3/3
Safety Integrated for SINAMICS S120 built-in units 3/12
Second environment 13/13
Sensor Module Cabinet-Mounted
- SMC10 ..... 7/300
- SMC20 ..... 7/301
- SMC30 ..... 7/302

Sensor Module External
- SME120/SME125 ..... 7/305
- SME20/SME25 ..... 7/303

Service Programs and Agreements 15/7
Servo pumps, drive applications 14/6
Siemens Automation Cooperates with Education 15/13
Signal cables, article number code 12/35
Signal connectors 12/53
Signal generator for test bays with SINAMICS Technology Extension POLYGON 6/4
SIMOTICS L linear motors 10/4
SIMOTICS L 10/4
SIMOTICS M asynchronous and synchronous motors 9/4
SIMOTICS M main motors 9/4
SIMOTICS M synchronous built-in motors 9/87
SIMOTICS M 9/4
SIMOTICS motors for motion control applications 1/14
SIMOTICS motors for motion control applications 1/14
SIMOTICS motors 1/13
SIMOTICS motors 1/13
SIMOTICS S geared motors for SINAMICS S120 ..... 8/53
SIMOTICS S 8/14
SIMOTICS T torque motors 10/18
SIMOTICS T 10/18
Simplify your education in automation 15/13

© Siemens AG 2017

Page

S (continued)

SINAMICS DCB Studio V1.2 ..... 13/7
SINAMICS DCC 13/7
SINAMICS Drive Control Chart (SINAMICS DCC) 13/7
SINAMICS S120 Control Units 13/7
SINAMICS S120 drive system 1/8
SINAMICS S120 drive system 1/8
SINAMICS S120 training case 15/12
SINAMICS S120 training courses 15/11
SINAMICS S120 training courses 15/11
SINAMICS S120 training courses 15/11
SINAMICS S120M distributed servo drive 7/105
SINAMICS S120M 7/105
SINAMICS Startdrive 13/8
SINAMICS TEC 6/4
SINAMICS Technology Extensions 6/4
- OALINK 6/4
- POLYGON 6/4
- VIBX 6/4

SINAMICS Web server 13/9
Sine-wave filters for chassis format 7/234
Single Motor Modules
- Booksize compact format 7/64
- Booksize format 7/70

SITRAIN – Training for Industry 15/10
SIZER for Siemens Drives engineering tool 13/3
SIZER for Siemens Drives 13/3
Smart Line Module
- Booksize compact format 7/41
- Booksize format 7/45
- Chassis format, air-cooled 7/135

SMC10 ..... 7/300
SMC20 ..... 7/301
SMC30 ..... 7/302
SME120/SME125 ..... 7/305
SME20/SME25 ..... 7/303
Social Media, Mobile Media 15/4
Spare parts services during the lifecycle 15/21
Spare Parts Services 15/6
Spares on Web 15/26
SPEED-CONNECT 12/4
Standard Technology Functions 2/4
Startdrive 13/8
STARTER commissioning tool 13/5
STARTER 13/5
Stock reduction in spare parts store 15/25
Storage and retrieval machines, drive applications 14/8
Supplementary system components 7/279
Support and Consulting Services 15/6
Synchronous Motors
- SIMOTICS M 9/4, 9/87
- SIMOTICS S 8/14

System components 13/38
System data, SINAMICS S120 drive system 7/7
System disturbances 13/34
System overview, SINAMICS S120 drive system 7/2

Page

T

TB30 Terminal Board 7/26
TB30 ..... 7/26
TEC 6/4
Technical definitions for AC motors 8/4
Technology Extension
- OALINK 6/4
- POLYGON 6/4
- VIBX 6/4

Terminal Module
- TM15 ..... 7/282
- TM120 ..... 7/293
- TM150 ..... 7/295
- TM31 ..... 7/284
- TM41 ..... 7/287
- TM54F 7/290

Test stands, drive applications 14/5
The operating principle of Safety Integrated 3/10
The operating principle of Safety Integrated 3/10
The SINAMICS drive family 1/3
The SINAMICS drive family 1/3
The SINAMICS drive family 1/3
Training Services 15/6
Training 15/10
Types of contract for production machines 15/19

U

USS 5/10

V

Vibration extinction for storage and retrieval machines with SINAMICS Technology Extension VIBX 6/4
VIBX 6/4
VPM Voltage Protection Module 9/100
VSM10 Voltage Sensing Module 7/297

W

Web server 13/9

© Siemens AG 2017

Article number index

Page

1FE

1FE1041-6WM.0-6BA. 9/90
1FE1041-6WU..-6BA. 9/90
1FE1042-6WN.0-6BA. 9/90
1FE1042-6WR..-6BA. 9/90
1FE1042-6WT..-6BA. 9/90
1FE1051-4HC.0-6BA. 9/94
1FE1051-4HF.1-6BA. 9/94
1FE1051-4WN.1-6BA. 9/94
1FE1051-6WK.0-6B.. ..... 9/90
1FE1051-6WN..-6B.. ..... 9/90
1FE1052-4HD.0-6BA. 9/94
1FE1052-4HG.1-6BA. 9/94
1FE1052-4WK.1-6BA. 9/94
1FE1052-4WN.1-6BA. 9/94
1FE1052-6WK.0-6B.. ..... 9/90
1FE1052-6WN..-6B.. ..... 9/90
1FE1052-6WY..-6B.. ..... 9/90
1FE1053-4HH.1-6BA. 9/94
1FE1053-4WJ.1-6BA. 9/94
1FE1053-4WN.1-6BA. 9/94
1FE1054-6WN.0-6BA. 9/90
1FE1054-6WR..-6BA. 9/90
1FE1061-6WH.0-6B.. ..... 9/90
1FE1061-6WV..-6B.. ..... 9/90
1FE1061-6WY..-6B.. ..... 9/90
1FE1062-6WQ.1-6BA. 9/90
1FE1064-6WN.1-6BA. 9/90
1FE1064-6WQ.1-6BA. 9/90
1FE1072-4WH.1-6BA. 9/94
1FE1072-4WL.1-6BA. 9/94
1FE1072-4WN.1-6BA. 9/94
1FE1072-4WV.1-6BA. 9/94
1FE1073-4WL.1-6BA. 9/94
1FE1073-4WN.1-6BA. 9/94
1FE1073-4WT.1-6BA. 9/94
1FE1074-4WM.1-6BA. 9/94
1FE1074-4WN.1-6BA. 9/94
1FE1074-4WR.1-6BA. 9/94
1FE1074-4WT.1-6BA. 9/94
1FE1074-4WV.1-6BA. 9/94
1FE1075-4WQ.1-6BA. 9/94
1FE1082-4WF.1-6BA. 9/94
1FE1082-4WK.1-6BA. 9/94
1FE1082-4WN.1-6BA. 9/94
1FE1082-4WP.1-6BA. 9/94
1FE1082-4WR.1-6BA. 9/94
1FE1082-6WE.1-6B.. ..... 9/90
1FE1082-6WP..-6B.. ..... 9/90
1FE1082-6WQ.1-6B.. ..... 9/90
1FE1082-6WS..-6B.. ..... 9/90
1FE1082-6WW.1-6B.. ..... 9/90
1FE1083-4WN.1-6BA. 9/94
1FE1083-6WP..-6B.. ..... 9/90
1FE1084-4WN.1-6BA. 9/94
1FE1084-4WP.1-6BA. 9/94
1FE1084-4WQ.1-6BA. 9/94
1FE1084-4WT.1-6BA. 9/94
1FE1084-4WV.1-6BA. 9/94
1FE1084-6WR.1-6B.. ..... 9/90
1FE1084-6WU.1-6B.. ..... 9/90
1FE1084-6WX.1-6B.. ..... 9/90

Page

1FE *(continued)*

1FE1085-4WN.1-6BA. 9/94
1FE1085-4WQ.1-6BA. 9/94
1FE1085-4WT.1-6BA. 9/94
1FE1091-6WN.0-6B.. ..... 9/90
1FE1091-6WS..-6B.. ..... 9/90
1FE1092-4WP.1-6BR. 9/96
1FE1092-4WV.1-6BR. 9/96
1FE1092-6WN.0-6B.. ..... 9/90
1FE1092-6WR.1-6B.. ..... 9/90
1FE1093-4WH.1-6B.. ..... 9/96
1FE1093-4WM.1-6B.. ..... 9/96
1FE1093-4WN.1-6B.. ..... 9/96
1FE1093-6WN.0-6B.. ..... 9/90
1FE1093-6WS..-6B.. ..... 9/90
1FE1093-6WV.1-6B.. ..... 9/90
1FE1093-6WX.1-6B.. ..... 9/90
1FE1094-4WK.1-6B.. ..... 9/96
1FE1094-4WL.1-6B.. ..... 9/96
1FE1094-4WS.1-6B.. ..... 9/96
1FE1094-4WU.1-6B.. ..... 9/96
1FE1095-4WN.1-6B.. ..... 9/96
1FE1096-4WN.1-6B.. ..... 9/96
1FE1103-4WN.1-6BA. 9/96
1FE1103-4WQ.1-6BA. 9/96
1FE1103-4WT.1-6BA. 9/96
1FE1104-4WL.1-6BA. 9/96
1FE1104-4WN.1-6BA. 9/96
1FE1105-4WN.1-6BA. 9/96
1FE1105-4WQ.1-6BA. 9/96
1FE1105-4WS.1-6BA. 9/96
1FE1106-4WN.1-6BA. 9/96
1FE1106-4WR.1-6BA. 9/96
1FE1106-4WS.1-6BA. 9/96
1FE1106-4WY.1-6BA. 9/96
1FE1113-6WU.1-6B.. ..... 9/92
1FE1113-6WX.1-6B.. ..... 9/92
1FE1114-6WR.1-6B.. ..... 9/92
1FE1114-6WT.1-6B.. ..... 9/92
1FE1114-6WW.1-6B.. ..... 9/92
1FE1115-6WT.1-6B.. ..... 9/92
1FE1115-6WW.1-6B.. ..... 9/92
1FE1116-6WR.1-6B.. ..... 9/92
1FE1116-6WT.1-6B.. ..... 9/92
1FE1116-6WW.1-6B.. ..... 9/92
1FE1116-6WY.1-6B.. ..... 9/92
1FE1124-4WN.1-6BA. 9/96
1FE1124-4WQ.1-6BA. 9/96
1FE1125-4WN.1-6BA. 9/96
1FE1125-4WP.1-6BA. 9/96
1FE1125-4WQ.1-6BA. 9/96
1FE1126-4WN.1-6BA. 9/96
1FE1126-4WP.1-6BA. 9/96
1FE1126-4WQ.1-6BA. 9/96
1FE1143-8WM.1-6BA. 9/92
1FE1143-8WQ.1-6BA. 9/92
1FE1144-8WL.1-6B.. ..... 9/92
1FE1144-8WQ.1-6B.. ..... 9/92
1FE1144-8WT.1-6B.. ..... 9/92
1FE1144-8WV.1-6B.. ..... 9/92
1FE1145-8WE.1-6B.. ..... 9/92
1FE1145-8WN.1-6B.. ..... 9/92
1FE1145-8WQ.1-6B.. ..... 9/92
1FE1145-8WS.1-6B.. ..... 9/92

Page

1FE *(continued)*

1FE1147-8WN.1-6B.. ..... 9/92
1FE1147-8WQ.1-6B.. ..... 9/92
1FE1147-8WS.1-6B.. ..... 9/92
1FE2182-8LH..-..C1 ..... 9/98
1FE2182-8LN..-..C1 ..... 9/98
1FE2183-8LH..-..C1 ..... 9/98
1FE2183-8LN..-..C1 ..... 9/98
1FE2184-8LH..-..C1 ..... 9/98
1FE2184-8LK..-..C1 ..... 9/98
1FE2184-8LN..-..C1 ..... 9/98
1FE2185-8LH..-..C1 ..... 9/98
1FE2185-8LL..-..C1 ..... 9/98
1FE2185-8LN..-..C1 ..... 9/98
1FE2186-8LH..-..C1 ..... 9/98
1FE2186-8LM..-..C1 ..... 9/98
1FE2186-8LN..-..C1 ..... 9/98
1FE2187-8LH..-..C1 ..... 9/98
1FE2187-8LN..-..C1 ..... 9/98

© Siemens AG 2017

Page

1FK

1FK7011-5AK2.-1... 8/48
1FK7011-5AK7.-1... 8/40
1FK7015-5AK2.-1... 8/48
1FK7015-5AK7.-1... 8/40
1FK7022-5AK2.-1... 8/48
1FK7022-5AK7.-1... 8/40
1FK7032-2AF2.-1... 8/46
1FK7032-2AK7.-1... 8/38
1FK7033-4CF2.-1... 8/50
1FK7033-4CK7.-1... 8/42
1FK7034-2AF2.-1... 8/46
1FK7034-2AK7.-1... 8/38
1FK7040-2AK7.-1... 8/38
1FK7042-2AC7.-1... 8/36
1FK7042-2AF2.-1... 8/46
1FK7042-2AF7.-1... 8/36
1FK7042-2AK7.-1... 8/38
1FK7042-3BK7.-1... 8/44
1FK7043-4CF2.-1... 8/50
1FK7043-4CH7.-1... 8/42
1FK7043-4CK7.-1... 8/42
1FK7044-4CF7.-1... 8/42
1FK7044-4CH7.-1... 8/42
1FK7060-2AC7.-1... 8/36
1FK7060-2AF7.-1... 8/36
1FK7060-2AH7.-1... 8/38
1FK7060-3BF7.-1... 8/44
1FK7061-4CF7.-1... 8/42
1FK7061-4CH7.-1... 8/42
1FK7062-2AC7.-1... 8/36
1FK7062-2AF7.-1... 8/36
1FK7062-2AH7.-1... 8/38
1FK7062-3BF7.-1... 8/44
1FK7063-2AC7.-1... 8/36
1FK7063-2AF7.-1... 8/36
1FK7063-2AH7.-1... 8/38
1FK7064-4CC7.-1... 8/42
1FK7064-4CF7.-1... 8/42
1FK7064-4CH7.-1... 8/42
1FK7080-2AF7.-1... 8/36
1FK7080-2AH7.-1... 8/38
1FK7081-2AC7.-1... 8/36
1FK7081-2AF7.-1... 8/36
1FK7081-2AH7.-1... 8/38
1FK7081-3BF7.-1... 8/44
1FK7083-2AC7.-1... 8/36
1FK7083-2AF7.-1... 8/36
1FK7083-2AH7.-1... 8/38

Page

1FK *(continued)*

1FK7084-2AC7.-1... 8/36
1FK7084-2AF7.-1... 8/36
1FK7084-3BC7.-1... 8/44
1FK7084-3BF7.-1... 8/44
1FK7085-4CC7.-1... 8/42
1FK7085-4CF7.-1... 8/42
1FK7086-4CC7.-1... 8/42
1FK7086-4CF7.-1... 8/42
1FK7100-2AC7.-1... 8/36
1FK7100-2AF7.-1... 8/36
1FK7100-3BC7.-1... 8/44
1FK7101-2AC7.-1... 8/36
1FK7101-2AF7.-1... 8/36
1FK7101-3BC7.-1... 8/44
1FK7101-3BF7.-1... 8/44
1FK7103-2AC7.-1... 8/36
1FK7103-2AF7.-1... 8/36
1FK7103-3BC7.-1... 8/44
1FK7103-3BF7.-1... 8/44
1FK7105-2AC7.-1... 8/36
1FK7105-2AF7.-1... 8/36
1FK7105-3BC7.-1... 8/44

© Siemens AG 2017

Article number index

Page

1FN

1FN3002-0PH00-0AA0 ..... 10/16
1FN3002-0PH01-0AA0 ..... 10/16
1FN3002-0TK0.-1..0 ..... 10/15
1FN3003-0PH00-0AA0 ..... 10/16
1FN3003-0PH01-0AA0 ..... 10/16
1FN3003-0TK0.-1..0 ..... 10/15
1FN3004-0TK0.-1..0 ..... 10/15
1FN3005-0PH00-0AA0 ..... 10/16
1FN3005-0PH01-0AA0 ..... 10/16
1FN3005-0TK0.-1..0 ..... 10/15
1FN3006-0PH00-0AA0 ..... 10/16
1FN3006-0PH01-0AA0 ..... 10/16
1FN3050-0TB00-1..0 ..... 10/14
1FN3050-0TC00-0AA0 ..... 10/14
1FN3050-0TF01-0AA0 ..... 10/15
1FN3050-0TG01-0AA0 ..... 10/15
1FN3050-0TJ01-0AA0 ..... 10/15
1FN3050-1ND00-0EA3 ..... 10/10
1FN3050-1ND00-0FA3 ..... 10/10
1FN3050-1PK10-0AA0 ..... 10/14
1FN3050-2NB80-0EA3 ..... 10/10
1FN3050-2NB80-0FA3 ..... 10/10
1FN3050-2PK00-0AA0 ..... 10/14
1FN3050-2PK10-0AA0 ..... 10/14
1FN3050-2WC00-0EA3 ..... 10/6
1FN3050-2WC00-0FA3 ..... 10/6
1FN3050-4SA00-0AA0 ..... 10/6, 10/10
1FN3050-4TP00-1A.. ..... 10/14
1FN3100-0TB00-1..0 ..... 10/14
1FN3100-0TC00-0AA0 ..... 10/14
1FN3100-0TF01-0AA0 ..... 10/15
1FN3100-0TG01-0AA0 ..... 10/15
1FN3100-0TJ01-0AA0 ..... 10/15
1FN3100-1NC00-0BA3 ..... 10/10
1FN3100-1PK10-0AA0 ..... 10/14
1FN3100-1WC00-0.A3 ..... 10/6
1FN3100-2NC80-0BA3 ..... 10/10
1FN3100-2PK00-0AA0 ..... 10/14
1FN3100-2PK10-0AA0 ..... 10/14
1FN3100-2WC00-0.A3 ..... 10/6
1FN3100-2WE00-0.A3 ..... 10/6
1FN3100-3NC00-0BA3 ..... 10/10
1FN3100-3PK00-0AA0 ..... 10/14
1FN3100-3PK10-0AA0 ..... 10/14
1FN3100-3WC00-0.A3 ..... 10/6
1FN3100-3WE00-0.A3 ..... 10/6
1FN3100-4NC80-0BA3 ..... 10/10
1FN3100-4PK00-0AA0 ..... 10/14
1FN3100-4PK10-0AA0 ..... 10/14
1FN3100-4SA00-0AA0 ..... 10/6, 10/10
1FN3100-4TP00-1A.. ..... 10/14
1FN3100-4WC00-0.A3 ..... 10/6
1FN3100-4WE00-0.A3 ..... 10/6
1FN3100-5PK00-0AA0 ..... 10/14
1FN3100-5WC00-0.A3 ..... 10/6

Page

1FN *(continued)*

1FN3150-0TB00-1..0 ..... 10/14
1FN3150-0TC00-0AA0 ..... 10/14
1FN3150-0TF01-0AA0 ..... 10/15
1FN3150-0TG01-0AA0 ..... 10/15
1FN3150-0TJ01-0AA0 ..... 10/15
1FN3150-1NC20-0BA3 ..... 10/10
1FN3150-1PK10-0AA0 ..... 10/14
1FN3150-1WC00-0.A3 ..... 10/6
1FN3150-1WE00-0AA1 ..... 10/6
1FN3150-2NB80-0BA3 ..... 10/10
1FN3150-2PK00-0AA0 ..... 10/14
1FN3150-2PK10-0AA0 ..... 10/14
1FN3150-2WC00-0.A3 ..... 10/6
1FN3150-3NB80-0BA3 ..... 10/10
1FN3150-3NC70-0BA3 ..... 10/10
1FN3150-3PK00-0AA0 ..... 10/14
1FN3150-3PK10-0AA0 ..... 10/14
1FN3150-3WC00-0.A3 ..... 10/6
1FN3150-4NB80-0BA3 ..... 10/10
1FN3150-4PK00-0AA0 ..... 10/14
1FN3150-4PK10-0AA0 ..... 10/14
1FN3150-4SA00-0AA0 ..... 10/6, 10/10
1FN3150-4TP00-1A.. ..... 10/14
1FN3150-4WC00-0.A3 ..... 10/6
1FN3150-5PK00-0AA0 ..... 10/14
1FN3150-5WC00-0.A3 ..... 10/6
1FN3300-0TB00-1..0 ..... 10/14
1FN3300-0TC00-0AA0 ..... 10/14
1FN3300-0TF01-0AA0 ..... 10/15
1FN3300-0TG01-0AA0 ..... 10/15
1FN3300-0TJ01-0AA0 ..... 10/15
1FN3300-1NC10-0BA3 ..... 10/12
1FN3300-1PK10-0AA0 ..... 10/14
1FN3300-1WC00-0.A3 ..... 10/6
1FN3300-2NC10-0BA3 ..... 10/12
1FN3300-2PK00-0AA0 ..... 10/14
1FN3300-2PK10-0AA0 ..... 10/14
1FN3300-2WB00-0.A3 ..... 10/6
1FN3300-2WC00-0.A3 ..... 10/6
1FN3300-2WG00-0.A3 ..... 10/6
1FN3300-3NB50-0BA3 ..... 10/12
1FN3300-3NC40-0BA3 ..... 10/12
1FN3300-3PK00-0AA0 ..... 10/14
1FN3300-3PK10-0AA0 ..... 10/14
1FN3300-3WC00-0.A3 ..... 10/6
1FN3300-3WG00-0.A3 ..... 10/6
1FN3300-4NB80-0BA3 ..... 10/12
1FN3300-4PK00-0AA0 ..... 10/14
1FN3300-4PK10-0AA0 ..... 10/14
1FN3300-4SA00-0AA0 ..... 10/6, 10/12
1FN3300-4TP00-1A.. ..... 10/14
1FN3300-4WB00-0.A3 ..... 10/6
1FN3300-4WC00-0.A3 ..... 10/6
1FN3450-0TB00-1..0 ..... 10/14
1FN3450-0TC00-0AA0 ..... 10/14
1FN3450-0TF01-0AA0 ..... 10/15
1FN3450-0TG01-0AA0 ..... 10/15
1FN3450-0TJ01-0AA0 ..... 10/15
1FN3450-2NB40-0BA3 ..... 10/12
1FN3450-2NB80-0BA3 ..... 10/12
1FN3450-2NC50-0BA3 ..... 10/12
1FN3450-2PK00-0AA0 ..... 10/14
1FN3450-2PK10-0AA0 ..... 10/14
1FN3450-2WA50-0.A3 ..... 10/8
1FN3450-2WB70-0.A3 ..... 10/8

Page

1FN *(continued)*

1FN3450-2WC00-0.A3 ..... 10/8
1FN3450-2WD00-0AA3 ..... 10/8
1FN3450-2WE00-0.A3 ..... 10/8
1FN3450-3NB50-0BA3 ..... 10/12
1FN3450-3NC50-0BA3 ..... 10/12
1FN3450-3PK00-0AA0 ..... 10/14
1FN3450-3PK10-0AA0 ..... 10/14
1FN3450-3WA50-0.A3 ..... 10/8
1FN3450-3WB00-0.A3 ..... 10/8
1FN3450-3WB50-0.A3 ..... 10/8
1FN3450-3WC00-0.A3 ..... 10/8
1FN3450-3WE00-0.A3 ..... 10/8
1FN3450-4NB80-0BA3 ..... 10/12
1FN3450-4PK00-0AA0 ..... 10/14
1FN3450-4PK10-0AA0 ..... 10/14
1FN3450-4SA00-0AA0 ..... 10/8, 10/12
1FN3450-4TP00-1A.. ..... 10/14
1FN3450-4WB00-0.A3 ..... 10/8
1FN3450-4WB50-0.A3 ..... 10/8
1FN3450-4WC00-0.A3 ..... 10/8
1FN3450-4WE00-0.A3 ..... 10/8
1FN3600-0TB00-1..0 ..... 10/14
1FN3600-0TJ01-0AA0 ..... 10/15
1FN3600-2NB80-0BA3 ..... 10/12
1FN3600-2PK00-0AA0 ..... 10/14
1FN3600-2PK10-0AA0 ..... 10/14
1FN3600-2WA50-0.A3 ..... 10/8
1FN3600-2WB00-0AA3 ..... 10/8
1FN3600-3NB80-0BA3 ..... 10/12
1FN3600-3PK00-0AA0 ..... 10/14
1FN3600-3PK10-0AA0 ..... 10/14
1FN3600-3WB00-0.A3 ..... 10/8
1FN3600-3WC00-0.A3 ..... 10/8
1FN3600-4NA70-0BA3 ..... 10/12
1FN3600-4NB80-0BA3 ..... 10/12
1FN3600-4PK00-0AA0 ..... 10/14
1FN3600-4PK10-0AA0 ..... 10/14
1FN3600-4SA00-0AA0 ..... 10/8, 10/12
1FN3600-4TP00-1A.. ..... 10/14
1FN3600-4WA30-0.A3 ..... 10/8
1FN3600-4WB00-0.A3 ..... 10/8
1FN3600-4WB50-0.A3 ..... 10/8
1FN3600-4WC00-0.A3 ..... 10/8
1FN3900-0TB00-1..0 ..... 10/14
1FN3900-0TJ01-0AA0 ..... 10/15
1FN3900-2NB20-0BA3 ..... 10/12
1FN3900-2PK00-0AA0 ..... 10/14
1FN3900-2PK10-0AA0 ..... 10/14
1FN3900-2WB00-0.A3 ..... 10/8
1FN3900-2WC00-0.A3 ..... 10/8
1FN3900-3NB20-0BA3 ..... 10/12
1FN3900-3PK00-0AA0 ..... 10/14
1FN3900-3PK10-0AA0 ..... 10/14
1FN3900-3WB00-0.A3 ..... 10/8
1FN3900-4NA50-0BA3 ..... 10/12
1FN3900-4NB20-0BA3 ..... 10/12
1FN3900-4PK00-0AA0 ..... 10/14
1FN3900-4PK10-0AA0 ..... 10/14
1FN3900-4SA00-0AA0 ..... 10/8, 10/12
1FN3900-4TP00-1A.. ..... 10/14
1FN3900-4WB00-0.A3 ..... 10/8
1FN3900-4WB50-0.A3 ..... 10/8
1FN3900-4WC00-0.A3 ..... 10/8

© Siemens AG 2017

Page

1FT

1FT7034-1AK7.-1..1 ..... 8/16
1FT7034-5AK7.-1... ..... 8/22
1FT7036-5AK7.-1... ..... 8/22
1FT7042-5AF7.-1... ..... 8/20
1FT7042-5AK7.-1... ..... 8/22
1FT7044-1AF7.-1..1 ..... 8/16
1FT7044-5AF7.-1... ..... 8/20
1FT7044-5AK7.-1... ..... 8/22
1FT7046-5AF7.-1... ..... 8/20
1FT7046-5AH7.-1... ..... 8/22
1FT7062-1AF7.-1..1 ..... 8/16
1FT7062-1AK7.-1..1 ..... 8/16
1FT7062-5AF7.-1... ..... 8/20
1FT7062-5AK7.-1... ..... 8/22
1FT7062-5WF7.-1... ..... 8/28
1FT7062-5WK7.-1... ..... 8/28
1FT7064-1AF7.-1..1 ..... 8/16
1FT7064-1AK7.-1..1 ..... 8/16
1FT7064-5AF7.-1... ..... 8/20
1FT7064-5AK7.-1... ..... 8/22
1FT7064-5WF7.-1... ..... 8/28
1FT7064-5WK7.-1... ..... 8/28
1FT7065-7SF7.-1... ..... 8/30
1FT7065-7SH7.-1... ..... 8/30
1FT7065-7WF7.-1... ..... 8/30
1FT7065-7WH7.-1... ..... 8/30
1FT7066-5AF7.-1... ..... 8/20
1FT7066-5AH7.-1... ..... 8/22
1FT7066-5WF7.-1... ..... 8/28
1FT7066-5WH7.-1... ..... 8/28
1FT7067-7SF7.-1... ..... 8/30
1FT7067-7SH7.-1... ..... 8/30
1FT7067-7WF7.-1... ..... 8/30
1FT7067-7WH7.-1... ..... 8/30
1FT7068-5AF7.-1... ..... 8/20
1FT7068-5WF7.-1... ..... 8/28
1FT7082-1AF7.-1..1 ..... 8/16
1FT7082-5AC7.-1... ..... 8/18
1FT7082-5AF7.-1... ..... 8/20
1FT7082-5AH7.-1... ..... 8/22
1FT7082-5WC7.-1... ..... 8/26
1FT7082-5WF7.-1... ..... 8/28
1FT7082-5WH7.-1... ..... 8/28
1FT7084-1AF7.-1..1 ..... 8/16
1FT7084-1AH7.-1..1 ..... 8/16
1FT7084-5AC7.-1... ..... 8/18
1FT7084-5AF7.-1... ..... 8/20
1FT7084-5AH7.-1... ..... 8/22
1FT7084-5SC7.-1... ..... 8/24
1FT7084-5SF7.-1... ..... 8/24
1FT7084-5SH7.-1... ..... 8/24
1FT7084-5WC7.-1... ..... 8/26
1FT7084-5WF7.-1... ..... 8/28
1FT7084-5WH7.-1... ..... 8/28

Page

1FT *(continued)*

1FT7085-7SF7.-1... ..... 8/30
1FT7085-7SH7.-1... ..... 8/30
1FT7085-7WF7.-1... ..... 8/30
1FT7085-7WH7.-.... ..... 8/30
1FT7086-1AF7.-1..1 ..... 8/16
1FT7086-1AH7.-1..1 ..... 8/16
1FT7086-5AC7.-1... ..... 8/18
1FT7086-5AF7.-1... ..... 8/20
1FT7086-5AH7.-1... ..... 8/22
1FT7086-5SC7.-1... ..... 8/24
1FT7086-5SF7.-1... ..... 8/24
1FT7086-5SH7.-1... ..... 8/24
1FT7086-5WC7.-1... ..... 8/26
1FT7086-5WF7.-1... ..... 8/28
1FT7086-5WH7.-1... ..... 8/28
1FT7087-7SF7.-1... ..... 8/30
1FT7087-7SH7.-.... ..... 8/30
1FT7087-7WF7.-.... ..... 8/30
1FT7087-7WH7.-.... ..... 8/30
1FT7102-1AC7.-1..1 ..... 8/16
1FT7102-5AB7.-1... ..... 8/18
1FT7102-5AC7.-1... ..... 8/18
1FT7102-5AF7.-1... ..... 8/20
1FT7102-5WB7.-1... ..... 8/26
1FT7102-5WC7.-1... ..... 8/26
1FT7102-5WF7.-1... ..... 8/28
1FT7105-1AC7.-1..1 ..... 8/16
1FT7105-5AB7.-1... ..... 8/18
1FT7105-5AC7.-1... ..... 8/18
1FT7105-5AF7.-1... ..... 8/20
1FT7105-5SC7.-1... ..... 8/24
1FT7105-5SF7.-.... ..... 8/24
1FT7105-5WB7.-1... ..... 8/26
1FT7105-5WC7.-1... ..... 8/26
1FT7105-5WF7.-.... ..... 8/28
1FT7108-5AB7.-1... ..... 8/18
1FT7108-5AC7.-1... ..... 8/18
1FT7108-5AF7.-1... ..... 8/20
1FT7108-5SC7.-1... ..... 8/24
1FT7108-5SF7.-.... ..... 8/24
1FT7108-5WB7.-1... ..... 8/26
1FT7108-5WC7.-.... ..... 8/26
1FT7108-5WF7.-.... ..... 8/28
1FT7132-5AB71-1... ..... 8/18
1FT7132-5AC71-1... ..... 8/18
1FT7132-5AF71-.... ..... 8/20
1FT7134-5AB71-1... ..... 8/18
1FT7134-5AC71-1... ..... 8/18
1FT7136-5AB71-1... ..... 8/18
1FT7136-5AC71-.... ..... 8/18
1FT7138-5AB71-.... ..... 8/18

© Siemens AG 2017

Article number index

Page

1FW

1FW3150-1.H.2-.D.0 ..... 10/40
1FW3150-1.L.2-.D.0 ..... 10/42
1FW3150-1.P.2-.D.0 ..... 10/44
1FW3152-1.H.2-.D.0 ..... 10/40
1FW3152-1.L.2-.D.0 ..... 10/42
1FW3152-1.P.2-.D.0 ..... 10/44
1FW3154-1.H.2-.D.0 ..... 10/40
1FW3154-1.L.2-.D.0 ..... 10/42
1FW3154-1.P.2-.D.0 ..... 10/44
1FW3155-1.H.2-.D.0 ..... 10/40
1FW3155-1.L.2-.D.0 ..... 10/42
1FW3155-1.P.2-.D.0 ..... 10/44
1FW3156-1.H.2-.D.0 ..... 10/40
1FW3156-1.L.2-.D.0 ..... 10/42
1FW3156-1.P.2-.D.0 ..... 10/44
1FW3201-1.E.2-.D.0 ..... 10/38
1FW3201-1.H.2-.D.0 ..... 10/40
1FW3201-1.L.2-.D.0 ..... 10/42
1FW3201-3.P.3-.D.0 ..... 10/46
1FW3201-3.S.3-.D.0 ..... 10/46
1FW3202-1.E.2-.D.0 ..... 10/38
1FW3202-1.H.2-.D.0 ..... 10/40
1FW3202-1.L.2-.D.0 ..... 10/42
1FW3202-3.P.3-.D.0 ..... 10/46
1FW3202-3.S.3-.D.0 ..... 10/46
1FW3203-1.E.2-.D.0 ..... 10/38
1FW3203-1.H.2-.D.0 ..... 10/40
1FW3203-1.L.2-.D.0 ..... 10/42
1FW3203-3.P.3-.D.0 ..... 10/46
1FW3203-3.S.3-.D.0 ..... 10/46
1FW3204-1.E.2-.D.0 ..... 10/38
1FW3204-1.H.2-.D.0 ..... 10/40
1FW3204-1.L.2-.D.0 ..... 10/42
1FW3204-3.P.3-.D.0 ..... 10/46
1FW3204-3.S.3-.D.0 ..... 10/46
1FW3206-1.E.2-.D.0 ..... 10/38
1FW3206-1.H.2-.D.0 ..... 10/40
1FW3206-1.L.2-.D.0 ..... 10/42
1FW3206-3.P.3-.D.0 ..... 10/46
1FW3206-3.S.3-.D.0 ..... 10/46
1FW3208-1.E.2-.D.0 ..... 10/38
1FW3208-1.H.2-.D.0 ..... 10/40
1FW3208-1.L.2-.D.0 ..... 10/42
1FW3208-3.P.3-.D.0 ..... 10/46
1FW3208-3.S.3-.D.0 ..... 10/46
1FW3281-2.E.3-.D.0 ..... 10/38
1FW3281-2.G.3-.D.0 ..... 10/38
1FW3281-3.J.3-.D.0 ..... 10/40
1FW3281-3.M.3-.D.0 ..... 10/42
1FW3283-2.E.3-.D.0 ..... 10/38
1FW3283-2.G.3-.D.0 ..... 10/38
1FW3283-3.J.3-.D.0 ..... 10/40
1FW3283-3.M.3-.D.0 ..... 10/42
1FW3285-2.E.3-.D.0 ..... 10/38
1FW3285-2.G.3-.D.0 ..... 10/38
1FW3285-3.J.3-.D.0 ..... 10/40
1FW3285-3.M.3-.D.0 ..... 10/42
1FW3287-2.E.3-.D.0 ..... 10/38
1FW3287-2.G.3-.D.0 ..... 10/38
1FW3287-3.J.3-.D.0 ..... 10/40
1FW3287-3.M.3-.D.0 ..... 10/42

Page

1FW *(continued)*

1FW6050-0.B03-0F.1 ..... 10/24
1FW6050-0.B05-0F.1 ..... 10/24
1FW6050-0.B07-0F.1 ..... 10/24
1FW6050-0.B07-0K.1 ..... 10/24
1FW6050-0.B10-0K.1 ..... 10/24
1FW6050-0.B15-0K.1 ..... 10/24
1FW6050-0.B15-1J.1 ..... 10/24
1FW6053-0.B03-0F.1 ..... 10/22
1FW6053-0.B05-0F.1 ..... 10/22
1FW6053-0.B07-0K.1 ..... 10/22
1FW6053-0.B10-0K.1 ..... 10/22
1FW6053-0.B15-1J.1 ..... 10/22
1FW6060-0.B03-0F.1 ..... 10/24
1FW6060-0.B05-0F.1 ..... 10/24
1FW6060-0.B05-0K.1 ..... 10/24
1FW6060-0.B07-0F.1 ..... 10/24
1FW6060-0.B07-0K.1 ..... 10/24
1FW6060-0.B10-0K.1 ..... 10/24
1FW6060-0.B10-1J.1 ..... 10/24
1FW6060-0.B15-0K.1 ..... 10/24
1FW6060-0.B15-1J.1 ..... 10/24
1FW6063-0.B03-0F.1 ..... 10/22
1FW6063-0.B05-0K.1 ..... 10/22
1FW6063-0.B07-0K.1 ..... 10/22
1FW6063-0.B10-1J.1 ..... 10/22
1FW6063-0.B15-1J.1 ..... 10/22
1FW6090-0.B05-0F.2 ..... 10/26
1FW6090-0.B05-0K.2 ..... 10/26
1FW6090-0.B07-0K.2 ..... 10/26
1FW6090-0.B07-1J.2 ..... 10/26
1FW6090-0.B10-0K.2 ..... 10/26
1FW6090-0.B10-1J.2 ..... 10/26
1FW6090-0.B15-1J.2 ..... 10/26
1FW6090-0.B15-2J.2 ..... 10/26
1FW6130-0.B05-0K.2 ..... 10/26
1FW6130-0.B05-1J.2 ..... 10/26
1FW6130-0.B07-0K.2 ..... 10/26
1FW6130-0.B07-1J.2 ..... 10/26
1FW6130-0.B10-1J.2 ..... 10/26
1FW6130-0.B10-2J.2 ..... 10/26
1FW6130-0.B15-1J.2 ..... 10/26
1FW6130-0.B15-2J.2 ..... 10/26
1FW6150-0.B05-1J.2 ..... 10/26
1FW6150-0.B05-4F.2 ..... 10/26
1FW6150-0.B07-2J.2 ..... 10/26
1FW6150-0.B07-4F.2 ..... 10/26
1FW6150-0.B10-2J.2 ..... 10/26
1FW6150-0.B10-4F.2 ..... 10/26
1FW6150-0.B15-2J.2 ..... 10/26
1FW6150-0.B15-4F.2 ..... 10/26
1FW6160-0.B05-1J.2 ..... 10/28
1FW6160-0.B05-2J.2 ..... 10/28
1FW6160-0.B05-5G.2 ..... 10/28
1FW6160-0.B07-1J.2 ..... 10/28
1FW6160-0.B07-2J.2 ..... 10/28
1FW6160-0.B07-5G.2 ..... 10/28
1FW6160-0.B07-8FB2 ..... 10/28
1FW6160-0.B10-1J.2 ..... 10/28
1FW6160-0.B10-2J.2 ..... 10/28
1FW6160-0.B10-2PB2 ..... 10/28
1FW6160-0.B10-5G.2 ..... 10/28
1FW6160-0.B10-8FB2 ..... 10/28

Page

1FW *(continued)*

1FW6160-0.B15-0WB2 ..... 10/28
1FW6160-0.B15-2J.2 ..... 10/28
1FW6160-0.B15-2PB2 ..... 10/28
1FW6160-0.B15-5G.2 ..... 10/28
1FW6160-0.B15-8FB2 ..... 10/28
1FW6160-0.B20-0WB2 ..... 10/28
1FW6160-0.B20-2PB2 ..... 10/28
1FW6160-0.B20-5G.2 ..... 10/28
1FW6160-0.B20-8FB2 ..... 10/28
1FW6160-1BA00-0AA0 ..... 10/35
1FW6190-0.B05-1J.2 ..... 10/30
1FW6190-0.B05-2J.2 ..... 10/30
1FW6190-0.B05-5G.2 ..... 10/30
1FW6190-0.B07-1J.2 ..... 10/30
1FW6190-0.B07-2J.2 ..... 10/30
1FW6190-0.B07-5G.2 ..... 10/30
1FW6190-0.B07-8FB2 ..... 10/30
1FW6190-0.B10-1J.2 ..... 10/30
1FW6190-0.B10-2J.2 ..... 10/30
1FW6190-0.B10-2PB2 ..... 10/30
1FW6190-0.B10-5G.2 ..... 10/30
1FW6190-0.B10-8FB2 ..... 10/30
1FW6190-0.B15-0WB2 ..... 10/30
1FW6190-0.B15-2J.2 ..... 10/30
1FW6190-0.B15-2PB2 ..... 10/30
1FW6190-0.B15-5G.2 ..... 10/30
1FW6190-0.B15-8FB2 ..... 10/30
1FW6190-0.B20-0WB2 ..... 10/30
1FW6190-0.B20-2PB2 ..... 10/30
1FW6190-0.B20-5G.2 ..... 10/30
1FW6190-0.B20-8FB2 ..... 10/30
1FW6230-0.B05-1J.2 ..... 10/32
1FW6230-0.B05-2J.2 ..... 10/32
1FW6230-0.B05-5G.2 ..... 10/32
1FW6230-0.B07-1J.2 ..... 10/32
1FW6230-0.B07-2J.2 ..... 10/32
1FW6230-0.B07-5G.2 ..... 10/32
1FW6230-0.B07-8FB2 ..... 10/32
1FW6230-0.B10-2J.2 ..... 10/32
1FW6230-0.B10-2PB2 ..... 10/32
1FW6230-0.B10-5G.2 ..... 10/32
1FW6230-0.B10-8FB2 ..... 10/32
1FW6230-0.B15-0WB2 ..... 10/32
1FW6230-0.B15-2PB2 ..... 10/32
1FW6230-0.B15-4C.2 ..... 10/32
1FW6230-0.B15-5G.2 ..... 10/32
1FW6230-0.B15-8FB2 ..... 10/32
1FW6230-0.B20-0WB2 ..... 10/32
1FW6230-0.B20-2PB2 ..... 10/32
1FW6230-0.B20-5G.2 ..... 10/32
1FW6230-0.B20-8FB2 ..... 10/32
1FW6290-0.B07-0LB2 ..... 10/34
1FW6290-0.B07-2PB2 ..... 10/34
1FW6290-0.B07-5G.2 ..... 10/34
1FW6290-0.B11-0LB2 ..... 10/34
1FW6290-0.B11-2PB2 ..... 10/34
1FW6290-0.B11-7A.2 ..... 10/34
1FW6290-0.B15-0LB2 ..... 10/34
1FW6290-0.B15-2PB2 ..... 10/34
1FW6290-0.B15-7A.2 ..... 10/34
1FW6290-0.B20-0LB2 ..... 10/34
1FW6290-0.B20-2PB2 ..... 10/34
1FW6290-1BA00-0AA0 ..... 10/35

© Siemens AG 2017

Page

1PH

1PH8083-..F..-.... 9/10, 9/14, 9/18, 9/22
1PH8083-..F2.-.... 9/36, 9/38, 9/40, 9/42
1PH8083-..G..-.... 9/10, 9/14, 9/18, 9/22
1PH8083-..G2.-.... 9/36, 9/38, 9/40, 9/42
1PH8083-..M..-.... 9/10, 9/14, 9/18, 9/22
1PH8087-..F..-.... 9/10, 9/14, 9/18, 9/22
1PH8087-..F2.-.... 9/36, 9/38, 9/40, 9/42
1PH8087-..G..-.... 9/10, 9/14, 9/18, 9/22
1PH8087-..G2.-.... 9/36, 9/38, 9/40, 9/42
1PH8087-..M..-.... 9/10, 9/14, 9/18, 9/22
1PH8101-..F..-.... 9/10, 9/14, 9/18, 9/22
1PH8101-..F2.-.... 9/36, 9/38, 9/40, 9/42
1PH8101-..G2.-.... 9/36, 9/38, 9/40, 9/42
1PH8103-..D..-.... 9/8, 9/12, 9/16, 9/20,
1PH8103-..F..-.... 9/10, 9/14, 9/18, 9/22
1PH8103-..F2.-.... 9/36, 9/38, 9/40, 9/42
1PH8103-..G..-.... 9/10, 9/14, 9/18, 9/22
1PH8103-..G2.-.... 9/36, 9/38, 9/40, 9/42
1PH8103-..M..-.... 9/10, 9/14, 9/18, 9/22
1PH8103-..M2.-.... 9/36, 9/38, 9/40, 9/42
1PH8105-..F..-.... 9/10, 9/14, 9/18, 9/22
1PH8105-..F2.-.... 9/36, 9/38, 9/40, 9/42
1PH8105-..G2.-.... 9/36, 9/38, 9/40, 9/42
1PH8105-..M2.-.... 9/36, 9/38, 9/40, 9/42
1PH8107-..B..-.... 9/8, 9/12, 9/16, 9/20
1PH8107-..D..-.... 9/8, 9/12, 9/16, 9/20
1PH8107-..F..-.... 9/10, 9/14, 9/18, 9/22
1PH8107-..F2.-.... 9/36, 9/38, 9/40, 9/42
1PH8107-..G..-.... 9/10, 9/14, 9/18, 9/22
1PH8107-..M..-.... 9/10, 9/14, 9/18, 9/22
1PH8107-..M2.-.... 9/36, 9/38, 9/40, 9/42
1PH8131-..B..-.... 9/8, 9/12, 9/16, 9/20
1PH8131-..D..-.... 9/8, 9/12, 9/16, 9/20
1PH8131-..F..-.... 9/10, 9/14, 9/18, 9/22, 9/52, 9/54, 9/56
1PH8131-..F2.-.... 9/36, 9/38, 9/40, 9/42, 9/58, 9/60
1PH8131-..G2.-.... 9/36, 9/38, 9/40, 9/42
1PH8131-..L..-.... 9/52, 9/54, 9/56
1PH8131-..L2.-.... 9/58, 9/60
1PH8133-..B..-.... 9/8, 9/12, 9/16, 9/20
1PH8133-..D..-.... 9/8, 9/12, 9/16, 9/20
1PH8133-..F..-.... 9/10, 9/14, 9/18, 9/22, 9/52, 9/54, 9/56
1PH8133-..F2.-.... 9/36, 9/38, 9/40, 9/42, 9/58, 9/60
1PH8133-..G..-.... 9/10, 9/14, 9/18, 9/22
1PH8133-..G2.-.... 9/36, 9/38, 9/40, 9/42, 9/58, 9/60
1PH8133-..L..-.... 9/52, 9/54, 9/56
1PH8135-..B..-.... 9/8, 9/12, 9/16, 9/20
1PH8135-..F..-.... 9/10, 9/14, 9/18, 9/22, 9/52, 9/54, 9/56
1PH8135-..F2.-.... 9/36, 9/38, 9/40, 9/42, 9/58, 9/60
1PH8135-..G..-.... 9/10, 9/14, 9/18, 9/22, 9/52, 9/54, 9/56
1PH8135-..G2.-.... 9/36, 9/38, 9/40, 9/42, 9/58, 9/60

Page

1PH *(continued)*

1PH8137-..B..-.... 9/8, 9/12, 9/16, 9/20
1PH8137-..D..-.... 9/8, 9/12, 9/16, 9/20
1PH8137-..F..-.... 9/10, 9/14, 9/18, 9/22, 9/52, 9/54, 9/56
1PH8137-..F2.-.... 9/36, 9/38, 9/40, 9/42, 9/58, 9/60
1PH8137-..G..-.... 9/10, 9/14, 9/18, 9/22
1PH8137-..G2.-.... 9/58, 9/60
1PH8137-..L..-.... 9/52, 9/54, 9/56
1PH8137-..M..-.... 9/52, 9/54, 9/56
1PH8138-..F2.-.... 9/36, 9/38, 9/40, 9/42, 9/58, 9/60
1PH8138-..G2.-.... 9/58, 9/60
1PH8163-..B..-.... 9/8, 9/12, 9/16, 9/20
1PH8163-..D..-.... 9/8, 9/12, 9/16, 9/20
1PH8163-..F..-.... 9/10, 9/14, 9/18, 9/22
1PH8163-..F2.-.... 9/36, 9/38, 9/40, 9/42
1PH8163-..G..-.... 9/10, 9/14, 9/18, 9/22
1PH8163-..G2.-.... 9/36, 9/38, 9/40, 9/42
1PH8164-..F2.-.... 9/58, 9/60
1PH8164-..L2.-.... 9/58, 9/60
1PH8165-..B..-.... 9/8, 9/12, 9/16, 9/20
1PH8165-..D..-.... 9/8, 9/12, 9/16, 9/20
1PH8165-..F..-.... 9/10, 9/14, 9/18, 9/22, 9/52, 9/54, 9/56
1PH8165-..F2.-.... 9/36, 9/38, 9/40, 9/42
1PH8165-..G..-.... 9/10, 9/14, 9/18, 9/22
1PH8165-..G2.-.... 9/36, 9/38, 9/40, 9/42
1PH8165-..L..-.... 9/52, 9/54, 9/56
1PH8166-..F2.-.... 9/36, 9/38, 9/40, 9/42, 9/58, 9/60
1PH8166-..G2.-.... 9/36, 9/38, 9/40, 9/42
1PH8166-..L2.-.... 9/58, 9/60
1PH8167-..F..-.... 9/52, 9/54, 9/56
1PH8167-..L..-.... 9/52, 9/54, 9/56
1PH8168-..F2.-.... 9/58, 9/60
1PH8168-..L2.-.... 9/58, 9/60
1PH8184-..B..-.... 9/8, 9/12, 9/16, 9/20, 9/26, 9/28, 9/30, 9/32
1PH8184-..B2.-.... 9/44, 9/46, 9/48
1PH8184-..C..-.... 9/8, 9/12, 9/16, 9/20, 9/26, 9/28, 9/30, 9/32, 9/52, 9/54, 9/56
1PH8184-..C2.-.... 9/44, 9/46, 9/48, 9/62, 9/64
1PH8184-..D..-.... 9/8, 9/12, 9/16, 9/20, 9/26, 9/28, 9/30, 9/32, 9/52, 9/54, 9/56
1PH8184-..D2.-.... 9/44, 9/46, 9/48, 9/62, 9/64
1PH8184-..F..-.... 9/10, 9/14, 9/18, 9/22, 9/26, 9/28, 9/30, 9/32, 9/52, 9/54, 9/56
1PH8184-..F2.-.... 9/44, 9/46, 9/48, 9/62, 9/64
1PH8184-..L..-.... 9/10, 9/14, 9/18, 9/26, 9/28, 9/30
1PH8184-..L2.-.... 9/44, 9/46, 9/48, 9/62, 9/64
1PH8186-..B..-.... 9/8, 9/12, 9/16, 9/20, 9/26, 9/28, 9/30, 9/32
1PH8186-..B2.-.... 9/44, 9/46, 9/48
1PH8186-..C..-.... 9/8, 9/12, 9/16, 9/20, 9/28, 9/30, 9/32, 9/52, 9/54, 9/56
1PH8186-..C2.-.... 9/44, 9/46, 9/48, 9/62, 9/64
1PH8186-..D..-.... 9/8, 9/12, 9/16, 9/20, 9/26, 9/28, 9/30, 9/32, 9/52, 9/54, 9/56
1PH8186-..D2.-.... 9/44, 9/46, 9/48, 9/62, 9/64
1PH8186-..F..-.... 9/10, 9/14, 9/18, 9/22, 9/26, 9/28, 9/30, 9/32, 9/52, 9/54, 9/56
1PH8186-..F2.-.... 9/44, 9/46, 9/48, 9/62, 9/64
1PH8186-..L..-.... 9/10, 9/14, 9/18, 9/26, 9/28, 9/30
1PH8186-..L2.-.... 9/44, 9/46, 9/48, 9/62, 9/64
1PH8186-.C..-.... 9/26

Page

1PH *(continued)*

1PH8224-..B..-.... 9/8, 9/12, 9/16, 9/20, 9/26, 9/28, 9/30, 9/32
1PH8224-..B2.-.... 9/44, 9/46, 9/48
1PH8224-..C..-.... 9/8, 9/12, 9/16, 9/20, 9/28, 9/30, 9/32, 9/52, 9/54, 9/56
1PH8224-..C2.-.... 9/44, 9/46, 9/48, 9/62, 9/64
1PH8224-..D..-.... 9/8, 9/12, 9/16, 9/20, 9/26, 9/28, 9/30, 9/32, 9/52, 9/54, 9/56
1PH8224-..D2.-.... 9/44, 9/46, 9/48, 9/62, 9/64
1PH8224-..F..-.... 9/10, 9/14, 9/18, 9/22, 9/26, 9/28, 9/30, 9/32, 9/52, 9/54, 9/56
1PH8224-..F2.-.... 9/44, 9/46, 9/48, 9/62, 9/64
1PH8224-..L..-.... 9/10, 9/14, 9/18, 9/26, 9/28, 9/30
1PH8224-..L2.-.... 9/44, 9/46, 9/48, 9/62, 9/64
1PH8224-.C..-.... 9/26
1PH8226-..B..-.... 9/8, 9/12, 9/16, 9/20, 9/26, 9/28, 9/30, 9/32
1PH8226-..B2.-.... 9/44, 9/46, 9/48
1PH8226-..C..-.... 9/8, 9/12, 9/16, 9/20, 9/28, 9/30, 9/32, 9/52, 9/54, 9/56
1PH8226-..C2.-.... 9/44, 9/46, 9/48, 9/62, 9/64
1PH8226-..D..-.... 9/8, 9/12, 9/16, 9/20, 9/26, 9/28, 9/30, 9/32, 9/52, 9/54, 9/56
1PH8226-..D2.-.... 9/44, 9/46, 9/48, 9/62, 9/64
1PH8226-..F..-.... 9/10, 9/14, 9/18, 9/22, 9/26, 9/28, 9/30, 9/32, 9/52, 9/54, 9/56
1PH8226-..F2.-.... 9/44, 9/46, 9/48, 9/62, 9/64
1PH8226-..L..-.... 9/10, 9/14, 9/18, 9/26, 9/28, 9/30
1PH8226-..L2.-.... 9/44, 9/46, 9/48, 9/62, 9/64
1PH8226-.C..-.... 9/26
1PH8228-..B..-.... 9/8, 9/12, 9/16, 9/20, 9/26, 9/28, 9/30, 9/32
1PH8228-..B2.-.... 9/44, 9/46, 9/48
1PH8228-..C..-.... 9/8, 9/12, 9/16, 9/20, 9/28, 9/30, 9/32, 9/52, 9/54, 9/56
1PH8228-..C2.-.... 9/44, 9/46, 9/48, 9/62, 9/64
1PH8228-..D..-.... 9/8, 9/12, 9/16, 9/20, 9/26, 9/28, 9/30, 9/32, 9/52, 9/54, 9/56
1PH8228-..D2.-.... 9/44, 9/46, 9/48, 9/62, 9/64
1PH8228-..F..-.... 9/10, 9/14, 9/18, 9/22, 9/26, 9/28, 9/30, 9/32, 9/52, 9/54, 9/56
1PH8228-..F2.-.... 9/44, 9/46, 9/48, 9/62, 9/64
1PH8228-..L..-.... 9/10, 9/14, 9/18, 9/26, 9/28, 9/30
1PH8228-..L2.-.... 9/44, 9/46, 9/48, 9/62, 9/64
1PH8228-.C..-.... 9/26
1PH8284-1.B1.-.... 9/8, 9/12, 9/16, 9/20
1PH8284-1.B2.-.... 9/44, 9/46, 9/48
1PH8284-1.C1.-.... 9/8, 9/12, 9/16, 9/20
1PH8284-1.C2.-.... 9/44, 9/46, 9/48
1PH8284-1.C4.-.... 9/26, 9/28, 9/30, 9/32
1PH8284-1.D1.-.... 9/8, 9/12, 9/16, 9/20
1PH8284-1.D2.-.... 9/44, 9/46, 9/48
1PH8284-1.D4.-.... 9/26, 9/28, 9/30, 9/32
1PH8284-1.F1.-... 9/10, 9/14, 9/18, 9/22
1PH8284-1.F2.-.... 9/44, 9/46, 9/48
1PH8284-1.F4.-.... 9/26, 9/28, 9/30, 9/32
1PH8284-1.H1.-.... 9/24
1PH8284-1.H2.-.... 9/50
1PH8284-1.K1.-.... 9/24
1PH8284-1.K2.-.... 9/50
1PH8284-1.K4.-.... 9/34
1PH8284-1.U1.-.... 9/24
1PH8284-1.U2.-.... 9/50
1PH8284-1.U4.-.... 9/34
1PH82841.W1.-.... 9/24
1PH8284-1.W2.-.... 9/50
1PH8284-1.W4.-.... 9/34

© Siemens AG 2017

Article number index

Page

1PH *(continued)*

1PH8286-1.B1.-.... 9/8, 9/12, 9/16, 9/20
1PH8286-1.B2.-.... 9/44, 9/46, 9/48
1PH8286-1.C1.-.... 9/8, 9/12, 9/16, 9/20
1PH8286-1.C2.-.... 9/44, 9/46, 9/48
1PH8286-1.C4.-.... 9/26, 9/28, 9/30, 9/32
1PH8286-1.D1.-.... 9/8, 9/12, 9/16, 9/20
1PH8286-1.D2.-.... 9/44, 9/46, 9/48
1PH8286-1.D4.-.... 9/26, 9/28, 9/30, 9/32
1PH8286-1.F1.-... 9/10, 9/14, 9/18, 9/22
1PH8286-1.F2.-.... 9/44, 9/46, 9/48
1PH8286-1.F4.-.... 9/26, 9/28, 9/30, 9/32
1PH8286-1.H1.-.... 9/24
1PH8286-1.H2.-.... 9/50
1PH8286-1.K1.-.... 9/24
1PH8286-1.K2.-.... 9/50
1PH8286-1.K4.-.... 9/34
1PH8286-1.U1.-.... 9/24
1PH8286-1.U2.-.... 9/50
1PH8286-1.U4.-.... 9/34
1PH82861.W1.-.... 9/24
1PH8286-1.W2.-.... 9/50
1PH8286-1.W4.-.... 9/34
1PH8288-1.B1.-.... 9/8, 9/12, 9/16, 9/20
1PH8288-1.B2.-.... 9/44, 9/46, 9/48
1PH8288-1.C1.-.... 9/8, 9/12, 9/16, 9/20
1PH8288-1.C2.-.... 9/44, 9/46, 9/48
1PH8288-1.C4.-.... 9/26, 9/28, 9/30, 9/32
1PH8288-1.D1.-.... 9/8, 9/12, 9/16, 9/20
1PH8288-1.D2.-.... 9/44, 9/46, 9/48
1PH8288-1.D4.-.... 9/26, 9/28, 9/30, 9/32
1PH8288-1.F1.-... 9/10, 9/14, 9/18, 9/22
1PH8288-1.F2.-.... 9/44, 9/46, 9/48
1PH8288-1.F4.-.... 9/26, 9/28, 9/30, 9/32
1PH8288-1.H1.-.... 9/24
1PH8288-1.H2.-.... 9/50
1PH8288-1.K1.-.... 9/24
1PH8288-1.K2.-.... 9/50
1PH8288-1.K4.-.... 9/34
1PH8288-1.U1.-.... 9/24
1PH8288-1.U2.-.... 9/50
1PH8288-1.U4.-.... 9/34
1PH82881.W1.-.... 9/24
1PH8288-1.W2.-.... 9/50
1PH8288-1.W4.-.... 9/34

Page

3KA

3KA5330-1GE01 ... 7/40, 7/53
3KA5530-1GE01 ... 7/63
3KA5730-1GE01 ... 7/40

3KL

3KL5030-1GB01 ... 7/53
3KL5230-1GB01 ... 7/40, 7/53, 7/63
3KL5530-1AB01 ... 7/206, 7/211
3KL5530-1GB01 ... 7/40, 7/53, 7/206, 7/211
3KL5730-1AB01 ... 7/206, 7/207, 7/211
3KL5730-1GB01 ... 7/40, 7/53, 7/206, 7/207, 7/211
3KL6130-1AB02 ... 7/206, 7/207, 7/209, 7/211
3KL6130-1GB02 ... 7/206, 7/207, 7/209, 7/211
3KL6230-1AB02 ... 7/207, 7/209, 7/211
3KL6230-1GB02 ... 7/207, 7/209, 7/211

3KX

3KX3552-3EA01 ... 7/40

3LD

3LD2003-0TK51 ... 7/53
3LD2504-0TK51 ... 7/40, 7/53, 7/63
3LD2704-0TK51 ... 7/40, 7/53, 7/63
3LD9200-5B ... 7/40

3NA

3NA3132 ... 7/40, 7/53
3NA3136 ... 7/40
3NA3144 ... 7/40, 7/63, 7/206
3NA3250 ... 7/206
3NA3250-6 ... 7/208
3NA3252 ... 7/211
3NA3252-6 ... 7/208
3NA3254 ... 7/206, 7/211
3NA3260 ... 7/206
3NA3352 ... 7/208
3NA3352-6 ... 7/211
3NA3354-6 ... 7/208, 7/209, 7/211
3NA3360-6 ... 7/208, 7/209, 7/211
3NA3362 ... 7/211
3NA3365 ... 7/208, 7/209, 7/211
3NA3365-6 ... 7/208, 7/209, 7/211
3NA3372 ... 7/206, 7/208, 7/209, 7/211
3NA3475 ... 7/208, 7/209, 7/211
3NA3480 ... 7/209
3NA3482 ... 7/208, 7/209
3NA3805 ... 7/53, 7/265, 7/266
3NA3812 ... 7/265, 7/266
3NA3814 ... 7/40, 7/53
3NA3820 ... 7/265, 7/266
3NA3822 ... 7/63
3NA3824 ... 7/40, 7/53
3NA3830 ... 7/63

Page

3NB

3NB1126-4KK11 ... 7/219
3NB1128-4KK11 ... 7/219
3NB1231-4KK11 ... 7/218, 7/219
3NB1234-4KK11 ... 7/218
3NB1337-4KK11 ... 7/218, 7/219
3NB1345-4KK11 ... 7/218, 7/219
3NB2345-4KK16 ... 7/218, 7/219
3NB2350-4KK16 ... 7/218, 7/219
3NB2355-4KK16 ... 7/218
3NB2357-4KK16 ... 7/219
3NB2364-4KK17 ... 7/218, 7/219
3NB2366-4KK17 ... 7/219

3NE

3NE1021-0 ... 7/208, 7/265, 7/266
3NE1022-0 ... 7/266
3NE1224-0 ... 7/265, 7/266
3NE1225-0 ... 7/265, 7/266
3NE1227-0 ... 7/265, 7/266
3NE1230-0 ... 7/266
3NE1230-2 ... 7/206, 7/208, 7/211
3NE1331-0 ... 7/266
3NE1331-2 ... 7/206, 7/208, 7/211
3NE1333-2 ... 7/206, 7/208
3NE1334-2 ... 7/208, 7/209, 7/211
3NE1435-2 ... 7/208, 7/209, 7/211
3NE1436-2 ... 7/206, 7/208, 7/209, 7/211
3NE1437-2 ... 7/208, 7/209
3NE1438-2 ... 7/208, 7/211
3NE1447-2 ... 7/208, 7/211
3NE1448-2 ... 7/209, 7/211
3NE1803-0 ... 7/266
3NE1815-0 ... 7/266
3NE1817-0 ... 7/208, 7/266
3NE1818-0 ... 7/265, 7/266
3NE1820-0 ... 7/265, 7/266
3NE3224 ... 7/219
3NE3225 ... 7/219
3NE3227 ... 13/44
3NE3230-0B ... 7/218, 7/219, 13/44
3NE3232-0B ... 7/218, 7/219
3NE3233 ... 7/218, 7/219
3NE3236 ... 7/218
3NE3334-0B ... 7/218
3NE3335 ... 7/218, 7/219
3NE3336 ... 7/218, 7/219
3NE3337-8 ... 7/219
3NE3338-8 ... 7/218
3NE3340-8 ... 7/218, 7/219
3NE8015-1 ... 13/44
3NE8017-1 ... 13/44
3NE8018-1 ... 13/44
3NE8020-1 ... 13/44
3NE8022-1 ... 13/44
3NE8024-1 ... 13/44
3NE8715-1 ... 13/44
3NE8717-1 ... 13/44
3NE8718-1 ... 13/44
3NE8720-1 ... 13/44
3NE8722-1 ... 13/44
3NE8724-1 ... 13/44
3NE8727-1 ... 13/44
3NE8731-1 ... 13/44

© Siemens AG 2017

Page

3NP

3NP1123-1CA20 ..... 7/40, 7/53, 7/63
3NP1143-1DA20 ..... 7/40, 7/53, 7/63
3NP1153-1DA20 ..... 7/40

3RT

3RT1023 ..... 7/53
3RT1026 ..... 7/53
3RT1034-… 7/208
3RT1035 ..... 7/40, 7/53, 7/63
3RT1044-… 7/208
3RT1045 ..... 7/40, 7/53, 7/63
3RT1054 ..... 7/40, 7/53
3RT1056 ..... 7/40, 7/63
3RT1064-6AP36 ..... 7/206
3RT1065 ..... 7/40
3RT1065-6AP36 ..... 7/206
3RT1066-... ..... 7/207
3RT1066-6AP36 ..... 7/206
3RT1075-... ..... 7/207
3RT1075-6AP36 ..... 7/206
3RT1076-... ..... 7/207
3RT1076-6AP36 ..... 7/206
3RT1466-6AP36 ..... 7/209
3RT1476-6AP36 ..... 7/209, 7/210

3RV

3RV1031-4FA10 ..... 7/40, 7/53
3RV1031-4HA10 ..... 7/265, 7/266
3RV1041-4JA10 ..... 7/63, 7/265
3RV1041-4KA10 ..... 7/265, 7/266
3RV1041-4LA10 ..... 7/40, 7/53, 7/265, 7/266
3RV1041-4MA10 ..... 7/266
3RV1042-4BA10 ..... 7/266
3RV1042-4EA10 ..... 7/266
3RV2011-4AA10 ..... 7/265, 7/266
3RV2021-4BA10 ..... 7/53
3RV2021-4EA10 ..... 7/265, 7/266

3TX

3TX7004-1LB00 ..... 7/40, 7/63

Page

3VL

3VL1102-2KM30-.... ..... 7/53
3VL1135-2KM30-.... ..... 7/40, 7/53
3VL1704-2DD33-.... ..... 7/266
3VL1705-2DD33-.... ..... 7/266
3VL1706-2DD33-.... ..... 7/266
3VL1708-2DD33-.... ..... 7/266
3VL1710-2DD33-.... ..... 7/266
3VL1712-2DD33-.... ..... 7/265, 7/266
3VL1716-2DD33-.... ..... 7/265, 7/266
3VL2506-2KN30-.... ..... 7/63
3VL2508-2KN30-.... ..... 7/40, 7/53
3VL2510-2KN30-.... ..... 7/63
3VL2512-2KN30-.... ..... 7/40, 7/53
3VL2710-1DC33-.... ..... 7/63
3VL2712-1DC33-.... ..... 7/40, 7/53
3VL3117-2KN30-.... ..... 7/40
3VL3125-2KN30-.... ..... 7/40, 7/63
3VL3720-1DC33-.... ..... 7/40
3VL3720-3DC33-.... ..... 7/265, 7/266
3VL3725-1DC36-.... ..... 7/40, 7/63
3VL3725-3DC33-.... ..... 7/265
3VL4731-3DC36-.... ..... 7/266
3VL4740-3DC36-.... ..... 7/266

3WL

3WL1110-2BB34-4AN2-Z C22 ..... 7/210
3WL1112-2BB34-4AN2-Z C22 ..... 7/207, 7/210
3WL1116-2BB34-4AN2-Z C22 ..... 7/207, 7/210
3WL1210-4BB34-4AN2-Z C22 ..... 7/207
3WL1210-4CB34-4AN2-Z C22 ..... 7/209
3WL1212-4BB34-4AN2-Z C22 ..... 7/207
3WL1212-4CB34-4AN2-Z C22 ..... 7/209
3WL1216-4BB34-4AN2-Z C22 ..... 7/207
3WL1216-4CB34-4AN2-Z C22 ..... 7/209
3WL1220-2BB34-4AN2-Z C22 ..... 7/207
3WL1220-4BB34-4AN2-Z C22 ..... 7/207

Page

5SB

5SB411 ..... 7/40

5SC

5SC211 ..... 7/40

5SE

5SE2335 ..... 7/40

6AG

6AG1064-1AA01-0AA0 ..... 15/12

6AU

6AU1810-1HA24-1XA0 ..... 13/7
6AU1810-1HA24-1XE0 ..... 13/7

6ES

6ES7901-1BF00-0XA0 ..... 13/6
6ES7901-4BD00-0XA0 ..... 13/6

6FC

6FC5297-0AD30-0AP3 ..... 15/28
6FC5297-0AD30-0BP3 ..... 15/28
6FC5297-0AD30-0CP3 ..... 15/28
6FC5297-0AD30-0DP3 ..... 15/28
6FC5297-0AD30-0EP3 ..... 15/28
6FC5297-0AD30-0RP3 ..... 15/28
6FC8507-0RX12-...0 ..... 15/19
6FC8507-0RX24-...0 ..... 15/19

© Siemens AG 2017

Article number index

Page

6FX

6FX.002-2DC3.-1..0 ..... 11/14
6FX2001-2C 11/6
6FX2001-2D 11/6
6FX2001-2E 11/6
6FX2001-2F 11/6
6FX2001-2G 11/6
6FX2001-2H 11/6
6FX2001-2M 11/6
6FX2001-2N 11/6
6FX2001-2P 11/6
6FX2001-2Q 11/6
6FX2001-2R 11/6
6FX2001-2S 11/6
6FX2001-3C 11/6
6FX2001-3E 11/6
6FX2001-3G 11/6
6FX2001-4D 11/6
6FX2001-4F 11/6
6FX2001-4H 11/6
6FX2001-4N 11/6
6FX2001-4Q 11/6
6FX2001-4S 11/6
6FX2001-5FD 11/12
6FX2001-5FE 11/12
6FX2001-5FN 11/12
6FX2001-5FP 11/12
6FX2001-5FS 11/12
6FX2001-5HE 11/12
6FX2001-5HS 11/12
6FX2001-5QD 11/12
6FX2001-5QE 11/12
6FX2001-5QN 11/12
6FX2001-5QP 11/12
6FX2001-5QS 11/12
6FX2001-5SE 11/12
6FX2001-5SS 11/12
6FX2001-5VD 11/12
6FX2001-5WD 11/12
6FX2001-5WN 11/12
6FX2001-5WP 11/12
6FX2001-7KF06 ..... 11/14
6FX2001-7KF10 ..... 11/14
6FX2001-7KP01 ..... 11/14
6FX2001-7KS06 ..... 11/14
6FX2001-7KS10 ..... 11/14
6FX2002-1DC00-.... ..... 12/26
6FX2002-1DC20-.... ..... 12/26
6FX2003-0DT67 ..... 12/54
6FX2003-0LA00 ..... 10/35, 12/53
6FX2003-0LA10 ..... 10/35, 12/53
6FX2003-0SA12 ..... 7/305, 11/14
6FX2003-0SA17 ..... 7/305
6FX2003-0SU01 ..... 7/305
6FX2003-0SU07 ..... 7/305, 10/35, 12/53
6FX2003-0SU12 ..... 11/14
6FX2003-0SU17 ..... 11/14
6FX2003-7AX00 ..... 12/54
6FX2003-7BX00 ..... 12/54
6FX2003-7CX00 ..... 12/54
6FX2003-7DX00 ..... 12/54
6FX2003-7FA00 ..... 12/54
6FX2003-7FX00 ..... 12/54
6FX2003-7GX00 ..... 12/54
6FX2003-7HX00 ..... 12/54

Page

6FX *(continued)*

6FX50.2-2AD04-.... ..... 12/31
6FX50.2-2AH11-.... ..... 12/31
6FX50.2-2CA31-.... ..... 12/31
6FX50.2-2CB54-.... ..... 12/31
6FX50.2-2CC06-.... ..... 12/31
6FX50.2-2CD24-.... ..... 12/31
6FX50.2-2CF02-.... ..... 12/31
6FX50.2-2CF06-.... ..... 12/31
6FX50.2-2CG00-.... ..... 12/31
6FX50.2-2CH00-.... ..... 12/31
6FX50.2-2CN20-.... ..... 12/30
6FX50.2-2CQ31-.... ..... 12/30
6FX50.2-2CR00-.... ..... 12/31
6FX50.2-2CR00-.... ..... 12/31
6FX50.2-2EN20-.... ..... 12/30
6FX50.2-2EQ10-.... ..... 12/31
6FX50.2-2EQ31-.... ..... 12/30
6FX50.2-2FN20-.... ..... 12/30
6FX50.2-5CG01-.... ..... 12/14
6FX50.2-5CG10-.... ..... 12/11
6FX50.2-5CG11-.... ..... 12/14
6FX50.2-5CG12-.... ..... 12/11
6FX50.2-5CG13-.... ..... 12/14
6FX50.2-5CG21-.... ..... 12/14
6FX50.2-5CG22-.... ..... 12/11
6FX50.2-5CG23-.... ..... 12/14
6FX50.2-5CG31-.... ..... 12/14
6FX50.2-5CG32-.... ..... 12/11
6FX50.2-5CG41-.... ..... 12/14
6FX50.2-5CG42-.... ..... 12/11
6FX50.2-5CG51-.... ..... 12/14
6FX50.2-5CG52-.... ..... 12/11
6FX50.2-5CG61-.... ..... 12/14
6FX50.2-5CG62-.... ..... 12/11
6FX50.2-5CN06-.... ..... 12/9
6FX50.2-5CN16-.... ..... 12/9
6FX50.2-5CN26-.... ..... 12/9
6FX50.2-5CN27-.... ..... 12/9
6FX50.2-5CN36-.... ..... 12/9
6FX50.2-5CN46-.... ..... 12/9
6FX50.2-5CN56-.... ..... 12/9
6FX50.2-5CN66-.... ..... 12/9
6FX50.2-5CS06-.... ..... 12/12
6FX50.2-5CS16-.... ..... 12/12
6FX50.2-5CS17-.... ..... 12/12
6FX50.2-5CS26-.... ..... 12/12
6FX50.2-5CS36-.... ..... 12/12
6FX50.2-5CS46-.... ..... 12/12
6FX50.2-5CS56-.... ..... 12/12
6FX50.2-5CS66-.... ..... 12/12
6FX50.2-5DA30-.... ..... 12/14
6FX50.2-5DG01-.... ..... 12/14
6FX50.2-5DG10-.... ..... 12/11
6FX50.2-5DG11-.... ..... 12/14
6FX50.2-5DG12-.... ..... 12/11
6FX50.2-5DG13-.... ..... 12/14
6FX50.2-5DG21-.... ..... 12/14
6FX50.2-5DG22-.... ..... 12/11
6FX50.2-5DG23-.... ..... 12/14
6FX50.2-5DG31-.... ..... 12/14
6FX50.2-5DG32-.... ..... 12/11
6FX50.2-5DG33-.... ..... 12/14
6FX50.2-5DG41-.... ..... 12/14
6FX50.2-5DG42-.... ..... 12/11

Page

6FX *(continued)*

6FX50.2-5DG43-.... ..... 12/14
6FX50.2-5DG51-.... ..... 12/14
6FX50.2-5DG52-.... ..... 12/11
6FX50.2-5DG53-.... ..... 12/14
6FX50.2-5DG61-.... ..... 12/14
6FX50.2-5DG62-.... ..... 12/11
6FX50.2-5DN06-.... ..... 12/10
6FX50.2-5DN16-.... ..... 12/10
6FX50.2-5DN26-.... ..... 12/10
6FX50.2-5DN27-.... ..... 12/10
6FX50.2-5DN30-.... ..... 12/11
6FX50.2-5DN36-.... ..... 12/10
6FX50.2-5DN46-.... ..... 12/10
6FX50.2-5DN56-.... ..... 12/10
6FX50.2-5DN66-.... ..... 12/10
6FX50.2-5DS06-.... ..... 12/13
6FX50.2-5DS16-.... ..... 12/13
6FX50.2-5DS17-.... ..... 12/13
6FX50.2-5DS26-.... ..... 12/13
6FX50.2-5DS27-.... ..... 12/13
6FX50.2-5DS36-.... ..... 12/13
6FX50.2-5DS46-.... ..... 12/13
6FX50.2-5DS56-.... ..... 12/13
6FX50.2-5DS66-.... ..... 12/13
6FX5002-2AD04-.... ..... 12/31
6FX5002-2AH00-.... ..... 12/31
6FX5002-2AH04-.... ..... 12/31
6FX5002-2CA12-.... ..... 12/31
6FX5002-2CA34-.... ..... 12/31
6FX5002-2CB54-.... ..... 12/31
6FX5002-2CC11-.... ..... 12/31
6FX5002-2CF04-.... ..... 12/31
6FX5002-2CQ34-.... ..... 12/30
6FX5002-2CQ34-.... ..... 12/30
6FX5002-2D.40-.... ..... 12/29
6FX5002-2D.44-.... ..... 12/29
6FX5002-2D.48-.... ..... 12/29
6FX5002-2DC00-.... ..... 12/27
6FX5002-2DC10-.... ..... 12/27
6FX5002-2DC20-.... ..... 12/27
6FX5002-2DC3.-1AB0 ..... 12/28
6FX5002-2DC3.-1AC0 ..... 12/28
6FX5002-2DC3.-1AD0 ..... 12/28
6FX5002-2DC3.-1AE0 ..... 12/28
6FX5002-2DC3.-1AF0 ..... 12/28
6FX5002-2DC3.-1AG0 ..... 12/28
6FX5002-2DC3.-1AH0 ..... 12/28
6FX5002-2DC3.-1AJ0 ..... 12/28
6FX5002-2DC3.-1AK0 ..... 12/28
6FX5002-2DC3.-1BA0 ..... 12/28
6FX5002-2DC3.-1BB0 ..... 12/28
6FX5002-2DC3.-1BC0 ..... 12/28
6FX5002-2DC3.-1BD0 ..... 12/28
6FX5002-2DC3.-1BE0 ..... 12/28
6FX5002-2DC3.-1BF0 ..... 12/28
6FX5002-2DC3.-1BG0 ..... 12/28
6FX5002-2DC3.-1BH0 ..... 12/28
6FX5002-2DC3.-1BJ0 ..... 12/28
6FX5002-2DC3.-1BK0 ..... 12/28
6FX5002-2DC3.-1CA0 ..... 12/28
6FX5002-2DC3.-1CF0 ..... 12/28
6FX5002-2DC3.-1DA0 ..... 12/28
6FX5002-2DC34-1AD0 ..... 12/28
6FX5002-2DC34-1AG0 ..... 12/28

© Siemens AG 2017

Page

6FX (continued)

6FX5002-2DC42-.... 12/29
6FX5002-2DC44-.... 12/29
6FX5002-2DC46-.... 12/29
6FX5002-2EQ14-.... 12/31
6FX5002-2EQ34-.... 12/30
6FX5002-5.A05-.... 12/15
6FX5002-5.A15-.... 12/15
6FX5002-5.A28-.... 12/15
6FX5002-5.A38-.... 12/15
6FX5002-5.A48-.... 12/15
6FX5002-5.A58-.... 12/15
6FX5002-5.A68-.... 12/15
6FX5002-5.N05-.... 12/15
6FX5002-5.Q15-.... 12/15
6FX5002-5.Q28-.... 12/15
6FX5002-5.Q38-.... 12/15
6FX5002-5.Q48-.... 12/15
6FX5002-5.Q58-.... 12/15
6FX5002-5.Q68-.... 12/15
6FX5002-5.X18-.... 12/15
6FX5002-5.X28-.... 12/15
6FX5002-5CN54-.... 12/9
6FX5002-5CN64-.... 12/9
6FX5002-5CR72-.... 12/17
6FX5002-5CR73-.... 12/16, 12/17
6FX5002-5CR83-.... 12/16, 12/17
6FX5002-5CS14-.... 12/12
6FX5002-5CS23-.... 12/12
6FX5002-5CS54-.... 12/12
6FX5002-5CS64-.... 12/12
6FX5002-5CW02-.... 12/12
6FX5002-5CW12-.... 12/12
6FX5002-5CW42-.... 12/12
6FX5002-5CW52-.... 12/12
6FX5002-5CW62-.... 12/12
6FX5002-5DG23-.... 12/13
6FX5002-5DG33-.... 12/13
6FX5002-5DG43-.... 12/13
6FX5002-5DG53-.... 12/13
6FX5002-5DN54-.... 12/10
6FX5002-5DN64-.... 12/10
6FX5002-5DS14-.... 12/13
6FX5002-5DS23-.... 12/13
6FX5002-5DS54-.... 12/13
6FX5002-5DS64-.... 12/13
6FX5002-5DX38-.... 12/15
6FX5002-5DX48-.... 12/15
6FX5002-5DX58-.... 12/15
6FX5002-5ME05-.... 12/15
6FX5002-5MN05-.... 12/15
6FX5008-1BA11-.... 12/10, 12/11, 12/13, 12/14
6FX5008-1BA21-.... 12/10, 12/11, 12/13, 12/14
6FX5008-1BA25-.... 12/13, 12/14
6FX5008-1BA31-.... 12/10, 12/11, 12/13, 12/14
6FX5008-1BA35-.... 12/13, 12/14
6FX5008-1BA41-.... 12/10, 12/11, 12/13, 12/14
6FX5008-1BA50-.... 12/13, 12/14
6FX5008-1BA51-.... 12/10, 12/11, 12/13, 12/14
6FX5008-1BA61-.... 12/13, 12/14
6FX5008-1BB05-.... 12/18, 12/20
6FX5008-1BB11-.... 12/9, 12/11, 12/12, 12/14, 12/20
6FX5008-1BB12-.... 12/18, 12/20

Page

6FX (continued)

6FX5008-1BB21-.... 12/9, 12/11, 12/12, 12/14, 12/17, 12/20
6FX5008-1BB25-.... 12/16, 12/17, 12/20
6FX5008-1BB31-.... 12/9, 12/11, 12/12, 12/14, 12/17, 12/20
6FX5008-1BB35-.... 12/16, 12/17, 12/20
6FX5008-1BB41-.... 12/9, 12/11, 12/12, 12/14, 12/20
6FX5008-1BB50-.... 12/16, 12/17, 12/20
6FX5008-1BB51-.... 12/9, 12/11, 12/12, 12/14, 12/17, 12/20
6FX5008-1BB61-.... 12/12, 12/14, 12/16, 12/17, 12/20
6FX5008-1BB70-.... 12/16, 12/17, 12/20
6FX5012-5CW02-.... 12/12
6FX5012-5CW12-.... 12/12
6FX5012-5CW42-.... 12/12
6FX5012-5CW52-.... 12/12
6FX5012-5CW62-.... 12/12
6FX5022-5CW02-.... 12/12
6FX5022-5CW12-.... 12/12
6FX5022-5CW42-.... 12/12
6FX5022-5CW52-.... 12/12
6FX5022-5CW62-.... 12/12
6FX5042-2AH00-.... 12/31
6FX5042-2CA12-.... 12/31
6FX5042-5CN54-.... 12/9
6FX5042-5CN64-.... 12/9
6FX5042-5CS14-.... 12/12
6FX5042-5CS23-.... 12/12
6FX5042-5CS54-.... 12/12
6FX5042-5CS64-.... 12/12
6FX5042-5DG23-.... 12/13
6FX5042-5DG33-.... 12/13
6FX5042-5DG43-.... 12/13
6FX5042-5DG53-.... 12/13
6FX5042-5DN54-.... 12/10
6FX5042-5DN64-.... 12/10
6FX5042-5DS14-.... 12/13
6FX5042-5DS23-.... 12/13
6FX5042-5DS54-.... 12/13
6FX5042-5DS64-.... 12/13
6FX7002-5LM02-.... 12/19
6FX7002-5LM32-.... 12/19
6FX7002-5LM42-.... 12/19
6FX7002-5LM62-.... 12/19
6FX7002-5LM72-.... 12/19
6FX7002-5LM82-.... 12/19
6FX80.2-2AD04-.... 12/31
6FX80.2-2AH11-.... 12/31
6FX80.2-2CA31-.... 12/31
6FX80.2-2CA80-.... 12/31
6FX80.2-2CB54-.... 12/31
6FX80.2-2CC06-.... 12/31
6FX80.2-2CD24-.... 12/31
6FX80.2-2CF02-.... 12/31
6FX80.2-2CF06-.... 12/31
6FX80.2-2CG00-.... 12/31
6FX80.2-2CH00-.... 12/31
6FX80.2-2CN20-.... 12/30
6FX80.2-2CQ31-.... 12/30
6FX80.2-2CQ80-.... 12/30
6FX80.2-2CR00-.... 12/31
6FX80.2-2CR00-.... 12/31

Page

6FX (continued)

6FX80.2-2EN20-.... 12/30
6FX80.2-2EQ10-.... 12/31
6FX80.2-2EQ31-.... 12/30
6FX80.2-2FN20-.... 12/30
6FX80.2-5CG01-.... 12/14
6FX80.2-5CG10-.... 12/11
6FX80.2-5CG11-.... 12/14
6FX80.2-5CG12-.... 12/11
6FX80.2-5CG13-.... 12/14
6FX80.2-5CG21-.... 12/14
6FX80.2-5CG22-.... 12/11
6FX80.2-5CG23-.... 12/14
6FX80.2-5CG31-.... 12/14
6FX80.2-5CG32-.... 12/11
6FX80.2-5CG41-.... 12/14
6FX80.2-5CG42-.... 12/11
6FX80.2-5CG51-.... 12/14
6FX80.2-5CG52-.... 12/11
6FX80.2-5CG61-.... 12/14
6FX80.2-5CG62-.... 12/11
6FX80.2-5CN06-.... 12/9
6FX80.2-5CN16-.... 12/9
6FX80.2-5CN26-.... 12/9
6FX80.2-5CN27-.... 12/9
6FX80.2-5CN36-.... 12/9
6FX80.2-5CN46-.... 12/9
6FX80.2-5CN56-.... 12/9
6FX80.2-5CN66-.... 12/9
6FX80.2-5CS06-.... 12/12
6FX80.2-5CS16-.... 12/12, 12/19, 12/21
6FX80.2-5CS17-.... 12/12
6FX80.2-5CS26-.... 12/12
6FX80.2-5CS36-.... 12/12
6FX80.2-5CS46-.... 12/12, 12/19, 12/21
6FX80.2-5CS56-.... 12/12
6FX80.2-5CS66-.... 12/12
6FX80.2-5DG01-.... 12/14
6FX80.2-5DG10-.... 12/11
6FX80.2-5DG11-.... 12/14
6FX80.2-5DG12-.... 12/11
6FX80.2-5DG13-.... 12/14
6FX80.2-5DG21-.... 12/14
6FX80.2-5DG22-.... 12/11
6FX80.2-5DG23-.... 12/14
6FX80.2-5DG31-.... 12/14
6FX80.2-5DG32-.... 12/11
6FX80.2-5DG33-.... 12/14
6FX80.2-5DG41-.... 12/14
6FX80.2-5DG42-.... 12/11
6FX80.2-5DG43-.... 12/14
6FX80.2-5DG51-.... 12/14
6FX80.2-5DG52-.... 12/11
6FX80.2-5DG53-.... 12/14
6FX80.2-5DG61-.... 12/14
6FX80.2-5DG62-.... 12/11
6FX80.2-5DN06-.... 12/10
6FX80.2-5DN16-.... 12/10
6FX80.2-5DN26-.... 12/10
6FX80.2-5DN27-.... 12/10

© Siemens AG 2017

Article number index

Page

6FX (continued)

6FX80.2-5DN30-.... 12/11
6FX80.2-5DN36-.... 12/10
6FX80.2-5DN46-.... 12/10
6FX80.2-5DN56-.... 12/10
6FX80.2-5DN66-.... 12/10
6FX80.2-5DS06-.... 12/13
6FX80.2-5DS16-.... 12/13
6FX80.2-5DS17-.... 12/13
6FX80.2-5DS26-.... 12/13
6FX80.2-5DS27-.... 12/13
6FX80.2-5DS36-.... 12/13
6FX80.2-5DS46-.... 12/13
6FX80.2-5DS56-.... 12/13
6FX80.2-5DS66-.... 12/13
6FX8002-2AD04-.... 12/31
6FX8002-2AH00-.... 12/31
6FX8002-2AH04-.... 12/31
6FX8002-2CA34-.... 12/31
6FX8002-2CA88-.... 7/303
6FX8002-2CB54-.... 12/31
6FX8002-2CC11-.... 12/31
6FX8002-2CF04-.... 12/31
6FX8002-2CN24-.... 12/30
6FX8002-2CQ34-.... 12/30
6FX8002-2D.40-.... 12/29
6FX8002-2D.44-.... 12/29
6FX8002-2D.48-.... 12/29
6FX8002-2DC00-.... 12/27
6FX8002-2DC10-.... 12/27
6FX8002-2DC20-.... 12/27
6FX8002-2DC3.-1AB0 12/28
6FX8002-2DC3.-1AC0 12/28
6FX8002-2DC3.-1AD0 12/28
6FX8002-2DC3.-1AE0 12/28
6FX8002-2DC3.-1AF0 12/28
6FX8002-2DC3.-1AG0 12/28
6FX8002-2DC3.-1AH0 12/28
6FX8002-2DC3.-1AJ0 12/28
6FX8002-2DC3.-1AK0 12/28
6FX8002-2DC3.-1BA0 12/28
6FX8002-2DC3.-1BB0 12/28
6FX8002-2DC3.-1BC0 12/28
6FX8002-2DC3.-1BD0 12/28
6FX8002-2DC3.-1BE0 12/28
6FX8002-2DC3.-1BF0 12/28
6FX8002-2DC3.-1BG0 12/28
6FX8002-2DC3.-1BH0 12/28
6FX8002-2DC3.-1BJ0 12/28
6FX8002-2DC3.-1BK0 12/28
6FX8002-2DC3.-1CA0 12/28
6FX8002-2DC3.-1CF0 12/28
6FX8002-2DC3.-1DA0 12/28
6FX8002-2DC34-1AD0 12/28
6FX8002-2DC34-1AG0 12/28
6FX8002-2DC42-.... 12/29
6FX8002-2DC44-.... 12/29
6FX8002-2DC46-.... 12/29
6FX8002-2EN24-.... 12/30
6FX8002-2EQ14-.... 12/31
6FX8002-2EQ34-.... 12/30
6FX8002-2FN24-.... 12/30

Page

6FX (continued)

6FX8002-2SL01-.... 10/6, 10/8, 10/10, 10/12, 12/32
6FX8002-2SL02-.... 10/6, 10/8, 10/10, 10/12, 12/32
6FX8002-2SL10-.... 10/35, 12/32
6FX8002-2SL20-.... 12/32
6FX8002-5.A05-.... 12/15
6FX8002-5.A15-.... 12/15
6FX8002-5.A28-.... 12/15
6FX8002-5.A38-.... 12/15
6FX8002-5.A48-.... 12/15
6FX8002-5.A58-.... 12/15
6FX8002-5.A68-.... 12/15
6FX8002-5.N05-.... 12/15
6FX8002-5.Q15-.... 12/15
6FX8002-5.Q28-.... 12/15
6FX8002-5.Q38-.... 12/15
6FX8002-5.Q48-.... 12/15
6FX8002-5.Q58-.... 12/15
6FX8002-5.Q68-.... 12/15
6FX8002-5.X18-.... 12/15
6FX8002-5.X28-.... 12/15
6FX8002-5CA15-.... 12/19, 12/21
6FX8002-5CA48-.... 12/19, 12/21
6FX8002-5CA58-.... 12/19, 12/21
6FX8002-5CA68-.... 12/19, 12/21
6FX8002-5CN54-.... 12/9
6FX8002-5CN64-.... 12/9
6FX8002-5CR10-.... 12/17, 12/18
6FX8002-5CR11-.... 12/17, 12/18
6FX8002-5CR20-.... 12/17
6FX8002-5CR21-.... 12/17
6FX8002-5CR41-.... 12/16, 12/17
6FX8002-5CR42-.... 12/16, 12/17
6FX8002-5CR43-.... 12/16, 12/17
6FX8002-5CR52-.... 12/16, 12/17
6FX8002-5CR53-.... 12/16, 12/17
6FX8002-5CS14-.... 12/12
6FX8002-5CS23-.... 12/12
6FX8002-5CS24-.... 12/12, 12/19, 12/21
6FX8002-5CS54-.... 12/12, 12/19, 12/21
6FX8002-5CS64-.... 12/12, 12/19, 12/21
6FX8002-5DG23-.... 12/13
6FX8002-5DG33-.... 12/13
6FX8002-5DG43-.... 12/13
6FX8002-5DG53-.... 12/13
6FX8002-5DN54-.... 12/10
6FX8002-5DN64-.... 12/10
6FX8002-5DS14-.... 12/13
6FX8002-5DS23-.... 12/13
6FX8002-5DS54-.... 12/13
6FX8002-5DS64-.... 12/13
6FX8002-5DX38-.... 12/15
6FX8002-5DX48-.... 12/15
6FX8002-5DX58-.... 12/15
6FX8002-5ME05-.... 12/15
6FX8002-5MN05-.... 12/15
6FX8002-5YW12-.... 12/19, 12/21
6FX8002-7HY 7/108
6FX8002-7HY00-.... 12/22
6FX8002-7HY11-.... 12/22
6FX8002-7HY22-.... 12/22

Page

6FX (continued)

6FX8008-1BA11-.... 12/10, 12/11, 12/13, 12/14
6FX8008-1BA21-.... 12/10, 12/11, 12/13, 12/14
6FX8008-1BA25-.... 12/13, 12/14, 12/16, 12/17
6FX8008-1BA31-.... 12/10, 12/11, 12/13, 12/14
6FX8008-1BA35-.... 12/13, 12/14, 12/16, 12/17
6FX8008-1BA41-.... 12/10, 12/11, 12/13, 12/14
6FX8008-1BA50-.... 12/13, 12/14, 12/16, 12/17
6FX8008-1BA51-.... 12/10, 12/11, 12/13, 12/14
6FX8008-1BA61-.... 12/13, 12/14
6FX8008-1BB11-.... 12/9, 12/11, 12/12, 12/14, 12/20
6FX8008-1BB21-.... 12/9, 12/11, 12/12, 12/14, 12/16, 12/17, 12/18, 12/19, 12/20, 12/21
6FX8008-1BB31-.... 12/9, 12/11, 12/12, 12/14, 12/16, 12/17, 12/19, 12/20, 12/21
6FX8008-1BB41-.... 12/9, 12/11, 12/12, 12/14, 12/19, 12/20, 12/21
6FX8008-1BB51-.... 12/9, 12/11, 12/12, 12/14, 12/16, 12/17, 12/19, 12/20, 12/21
6FX8008-1BB61-.... 12/12, 12/14, 12/16, 12/17, 12/19, 12/20, 12/21
6FX8042-2AH00-.... 12/31
6FX8042-5CN54-.... 12/9
6FX8042-5CN64-.... 12/9
6FX8042-5CS14-.... 12/12
6FX8042-5CS23-.... 12/12
6FX8042-5CS24-.... 12/12, 12/21
6FX8042-5CS54-.... 12/12, 12/21
6FX8042-5CS64-.... 12/12, 12/21
6FX8042-5DG23-.... 12/13
6FX8042-5DG33-.... 12/13
6FX8042-5DG43-.... 12/13
6FX8042-5DG53-.... 12/13
6FX8042-5DN54-.... 12/10
6FX8042-5DN64-.... 12/10
6FX8042-5DS14-.... 12/13
6FX8042-5DS23-.... 12/13
6FX8042-5DS54-.... 12/13
6FX8042-5DS64-.... 12/13
6FX8052-5CP16-.... 12/16
6FX8052-5CP17-.... 12/16
6FX8052-5CP26-.... 12/16
6FX8052-5CP27-.... 12/16
6FX8052-5CP45-.... 12/16
6FX8052-5CP46-.... 12/16
6FX8052-5CP47-.... 12/16
6FX8082-5CP16-.... 12/16
6FX8082-5CP17-.... 12/16
6FX8082-5CP26-.... 12/16
6FX8082-5CP27-.... 12/16
6FX8082-5CP45-.... 12/16
6FX8082-5CP46-.... 12/16
6FX8082-5CP47-.... 12/16

© Siemens AG 2017

Page

6GK

6GK1571-1AA00 ..... 13/6
6GK1901-0DB20-6AA0 ..... 11/14
6GK1901-1BB10-2AA0 ..... 7/24
6GK1901-1BB10-2AB0 ..... 7/24
6GK1901-1BB30-0AA0 ..... 11/14
6GK1901-1GA00 ..... 7/24
6GK1907-0DC10-6AA3 ..... 11/14

6SE

6SE6400-3TC03-8DD0 ..... 7/274
6SE6400-3TC07-5ED0 ..... 7/274
6SE6400-3TC14-5FD0 ..... 7/274
6SE7021-0ES87-1FE0 ..... 7/103
6SE7022-6ES87-1FE0 ..... 7/103
6SE7023-2ES87-2DC0 ..... 7/97
6SE7024-7ES87-1FE0 ..... 7/103
6SE7027-2ES87-1FE0 ..... 7/103
6SE7028-0ES87-2DC0 ..... 7/97
6SE7031-5ES87-1FE0 ..... 7/103
6SE7032-6ES87-1FE0 ..... 7/103

Page

6SL

6SL3000-0BE21-6DA0 ..... 7/39, 7/52, 7/62
6SL3000-0BE23-6DA1 ..... 7/39, 7/52, 7/62
6SL3000-0BE25-5DA0 ..... 7/39, 7/52
6SL3000-0BE28-0DA0 ..... 7/39
6SL3000-0BE31-2DA0 ..... 7/39, 7/62
6SL3000-0BE32-5AA0 ..... 7/198
6SL3000-0BE33-1AA0 ..... 7/199
6SL3000-0BE34-4AA0 ..... 7/198
6SL3000-0BE35-0AA0 ..... 7/199
6SL3000-0BE36-0AA0 ..... 7/198
6SL3000-0BE41-2AA0 ..... 7/198
6SL3000-0BE41-6AA0 ..... 7/198
6SL3000-0BG34-4AA0 ..... 7/198
6SL3000-0BG36-0AA0 ..... 7/198
6SL3000-0BG41-2AA0 ..... 7/198
6SL3000-0BG41-6AA0 ..... 7/198
6SL3000-0CE15-0AA0 ..... 7/51
6SL3000-0CE21-0AA0 ..... 7/51
6SL3000-0CE21-6AA0 ..... 7/51
6SL3000-0CE22-0AA0 ..... 7/61
6SL3000-0CE23-6AA0 ..... 7/51
6SL3000-0CE24-0AA0 ..... 7/61
6SL3000-0CE25-5AA0 ..... 7/51
6SL3000-0CE31-0AA0 ..... 7/61
6SL3000-0CE32-3AA0 ..... 7/202
6SL3000-0CE32-8AA0 ..... 7/202
6SL3000-0CE33-3AA0 ..... 7/202
6SL3000-0CE35-1AA0 ..... 7/202
6SL3000-0CE36-3AA0 ..... 7/202
6SL3000-0CE37-7AA0 ..... 7/202
6SL3000-0CE41-0AA0 ..... 7/202
6SL3000-0CE41-5AA0 ..... 7/202
6SL3000-0CE41-6AA0 ..... 7/202
6SL3000-0CH32-7AA0 ..... 7/202
6SL3000-0CH33-4AA0 ..... 7/202
6SL3000-0CH34-8AA0 ..... 7/202
6SL3000-0CH36-0AA0 ..... 7/202
6SL3000-0CH41-2AA0 ..... 7/202
6SL3000-0CH41-6AA0 ..... 7/202
6SL3000-0EE36-2AA0 ..... 7/203
6SL3000-0EE38-8AA0 ..... 7/203
6SL3000-0EE41-4AA0 ..... 7/203
6SL3000-0EH34-7AA0 ..... 7/203
6SL3000-0EH37-6AA0 ..... 7/203
6SL3000-0EH41-4AA0 ..... 7/203
6SL3000-0HE15-0AA0 ..... 7/52
6SL3000-0HE21-0AA0 ..... 7/52
6SL3000-0KE12-2AA0 ..... 7/208
6SL3000-0KH14-0AA0 ..... 7/208
6SL3000-1BE31-3AA0 ..... 7/216
6SL3000-1BE32-5AA0 ..... 7/216
6SL3000-1BF31-3AA0 ..... 7/216
6SL3000-1BF32-5AA0 ..... 7/216
6SL3000-1BH31-3AA0 ..... 7/216
6SL3000-1BH32-5AA0 ..... 7/216

Page

6SL *(continued)*

6SL3000-2AE36-1AA0 ..... 7/220
6SL3000-2AE38-4AA0 ..... 7/220
6SL3000-2AE41-0AA0 ..... 7/220
6SL3000-2AE41-4AA0 ..... 7/220
6SL3000-2AH31-0AA0 ..... 7/220, 7/274
6SL3000-2AH31-5AA0 ..... 7/220, 7/274
6SL3000-2AH31-8AA0 ..... 7/220
6SL3000-2AH32-4AA0 ..... 7/220
6SL3000-2AH32-6AA0 ..... 7/220
6SL3000-2AH33-6AA0 ..... 7/220
6SL3000-2AH34-5AA0 ..... 7/220
6SL3000-2AH34-7AA0 ..... 7/220
6SL3000-2AH35-8AA0 ..... 7/220
6SL3000-2AH38-1AA0 ..... 7/220
6SL3000-2AH41-0AA0 ..... 7/220
6SL3000-2AH41-1AA0 ..... 7/220
6SL3000-2AH41-3AA0 ..... 7/220
6SL3000-2BE21-0AA0 ..... 7/103
6SL3000-2BE26-0AA0 ..... 7/103
6SL3000-2BE32-1AA0 ..... 7/220, 7/274
6SL3000-2BE32-6AA0 ..... 7/220, 7/274
6SL3000-2BE33-2AA0 ..... 7/220
6SL3000-2BE33-8AA0 ..... 7/220
6SL3000-2BE35-0AA0 ..... 7/220
6SL3000-2CE32-3AA0 ..... 7/234
6SL3000-2CE32-8AA0 ..... 7/234
6SL3000-2CE33-3AA0 ..... 7/234
6SL3000-2CE34-1AA0 ..... 7/234
6SL3000-2DE32-6AA0 ..... 7/225
6SL3000-2DE32-6EA0 ..... 7/230
6SL3000-2DE35-0AA0 ..... 7/225
6SL3000-2DE35-0EA0 ..... 7/230
6SL3000-2DE38-4AA0 ..... 7/225
6SL3000-2DE38-4EA0 ..... 7/230
6SL3000-2DE41-4AA0 ..... 7/225
6SL3000-2DE41-4EA0 ..... 7/230
6SL3000-2DG31-0EA0 ..... 7/230
6SL3000-2DG31-5EA0 ..... 7/230
6SL3000-2DG32-2EA0 ..... 7/230
6SL3000-2DG33-3EA0 ..... 7/230
6SL3000-2DG34-1EA0 ..... 7/230
6SL3000-2DG35-8EA0 ..... 7/230
6SL3000-2DG38-1EA0 ..... 7/230
6SL3000-2DG41-3EA0 ..... 7/230
6SL3000-2DH31-0AA0 ..... 7/225
6SL3000-2DH31-5AA0 ..... 7/225
6SL3000-2DH32-2AA0 ..... 7/225
6SL3000-2DH33-3AA0 ..... 7/225
6SL3000-2DH34-1AA0 ..... 7/225
6SL3000-2DH35-8AA0 ..... 7/225
6SL3000-2DH38-1AA0 ..... 7/225
6SL3000-2DH41-3AA0 ..... 7/225
6SL3040-0PA00-0AA1 ..... 7/20
6SL3040-0PA01-0AA0 ..... 7/22
6SL3040-1LA00-0AA0 ..... 7/12
6SL3040-1LA01-0AA0 ..... 7/12
6SL3040-1MA00-0AA0 ..... 7/16
6SL3040-1MA01-0AA0 ..... 7/16

© Siemens AG 2017

Article number index

Page

6SL (continued)

6SL3053-0AA00-3AA1 ..... 7/297
6SL3054-0EH00-1BA0 ..... 7/12, 7/16
6SL3054-0EH01-1BA0 ..... 7/16
6SL3054-0EJ00-1BA0 ..... 7/12, 7/16
6SL3054-0EJ01-1BA0 ..... 7/16
6SL3055-0AA00-2CA0 ..... 7/25
6SL3055-0AA00-2EB0 ..... 7/24
6SL3055-0AA00-2TA0 ..... 7/26
6SL3055-0AA00-3AA1 ..... 7/284
6SL3055-0AA00-3BA0 ..... 7/290
6SL3055-0AA00-3FA0 ..... 7/282
6SL3055-0AA00-3KA0 ..... 7/293
6SL3055-0AA00-3LA0 ..... 7/295
6SL3055-0AA00-3PA1 ..... 7/287
6SL3055-0AA00-4BA0 ..... 7/12
6SL3055-0AA00-4BA0 ..... 7/16, 7/19
6SL3055-0AA00-5AA3 ..... 7/300
6SL3055-0AA00-5BA3 ..... 7/301
6SL3055-0AA00-5CA2 ..... 7/302
6SL3055-0AA00-5EA3 ..... 7/303
6SL3055-0AA00-5HA3 ..... 7/303
6SL3055-0AA00-5JA3 ..... 7/305
6SL3055-0AA00-5KA3 ..... 7/305
6SL3055-0AA00-6AA1 ..... 7/279
6SL3055-0AA00-6AB0 ..... 7/280
6SL3060-4AA10-0AA0 ..... 7/35, 12/26
6SL3060-4AA50-0AA0 ..... 12/26
6SL3060-4AB00-0AA0 ..... 12/26
6SL3060-4AB20-0AA0 ..... 12/26
6SL3060-4AD00-0AA0 ..... 12/26
6SL3060-4AF00-0AA0 ..... 12/26
6SL3060-4AF10-0AA0 ..... 12/26
6SL3060-4AH00-0AA0 ..... 12/26
6SL3060-4AJ20-0AA0 ..... 12/26
6SL3060-4AK00-0AA0 ..... 7/35, 12/26
6SL3060-4AM00-0AA0 ..... 12/26
6SL3060-4AP00-0AA0 ..... 7/35, 12/26
6SL3060-4AU00-0AA0 ..... 7/35, 12/26
6SL3060-4AW00-0AA0 ..... 12/26
6SL3060-4DX04-0AA0 ..... 7/236
6SL3064-1BB00-0AA0 ..... 7/16
6SL3066-2DA00-0AA0 ..... 12/55
6SL3066-2DA00-0AB0 ..... 12/56
6SL3066-4CA00-0AA0 ..... 7/12, 7/16, 7/20, 7/22, 7/32, 7/41, 7/48, 7/57, 7/66, 7/72, 7/82, 7/88, 7/120, 7/124, 7/135, 7/140, 7/145, 7/171, 7/175, 7/183, 7/187, 7/279, 7/282, 7/284, 7/287, 7/290, 7/293, 7/295, 7/297, 7/300, 7/301, 7/302
6SL3066-4CA01-0AA0 ..... 7/280
6SL3070-0AA00-0AG0 ..... 7/12, 7/16, 13/3, 13/6
6SL3074-0AA01-0AA0 ..... 7/16
6SL3074-0AA02-0AA0 ..... 7/12, 7/16
6SL3074-0AA05-0AA0 ..... 7/12, 7/16
6SL3074-0AA10-0AA0 ..... 7/12, 7/16
6SL3074-0AA15-0AA0 ..... 7/12, 7/16

Page

6SL (continued)

6SL3075-0AA00-0AG0 ..... 13/4
6SL3077-0AA00-0AB0 ..... 13/7
6SL3097-4AB00-0AP5 ..... 15/29
6SL3097-4AB00-0BP5 ..... 15/29
6SL3097-4AB00-0CP5 ..... 15/29
6SL3097-4AB00-0DP5 ..... 15/29
6SL3097-4AB00-0EP5 ..... 15/29
6SL3097-4AB00-0KP5 ..... 15/29
6SL3097-4AB00-0PP5 ..... 15/29
6SL3097-4AB00-0RP5 ..... 15/29
6SL3097-4AC00-0AP8 ..... 15/29
6SL3097-4AC00-0BP8 ..... 15/29
6SL3097-4AC00-0CP8 ..... 15/29
6SL3097-4AC00-0DP8 ..... 15/29
6SL3097-4AC00-0EP8 ..... 15/29
6SL3097-4AC00-0PP8 ..... 15/29
6SL3097-4AC00-0RP8 ..... 15/29
6SL3097-4AC00-0TP6 ..... 15/29
6SL3097-4AC20-0AP0 ..... 15/29
6SL3097-4AC20-0BP0 ..... 15/29
6SL3097-4AC20-0CP0 ..... 15/29
6SL3097-4AC20-0DP0 ..... 15/29
6SL3097-4AC20-0EP0 ..... 15/29
6SL3097-4AC20-0RP0 ..... 15/29
6SL3097-4AE00-0AP5 ..... 15/29
6SL3097-4AE00-0BP5 ..... 15/29
6SL3097-4AE00-0CP5 ..... 15/29
6SL3097-4AE00-0DP5 ..... 15/29
6SL3097-4AE00-0EP5 ..... 15/29
6SL3097-4AE00-0PP5 ..... 15/29
6SL3097-4AE00-0RP5 ..... 15/29
6SL3097-4AF00-0AP5 ..... 15/29
6SL3097-4AF00-0BP5 ..... 15/29
6SL3097-4AF00-0CP5 ..... 15/29
6SL3097-4AF00-0DP5 ..... 15/29
6SL3097-4AF00-0EP5 ..... 15/29
6SL3097-4AF00-0PP5 ..... 15/29
6SL3097-4AF00-0RP5 ..... 15/29
6SL3097-4AG00-0AP4 ..... 15/29
6SL3097-4AG00-0BP4 ..... 15/29
6SL3097-4AG00-0CP4 ..... 15/29
6SL3097-4AG00-0DP4 ..... 15/29
6SL3097-4AG00-0EP4 ..... 15/29
6SL3097-4AG00-0PP4 ..... 15/29
6SL3097-4AG00-0RP4 ..... 15/29
6SL3097-4AH00-0AP6 ..... 15/29
6SL3097-4AH00-0BP6 ..... 15/29
6SL3097-4AH00-0CP6 ..... 15/29
6SL3097-4AH00-0DP6 ..... 15/29
6SL3097-4AH00-0EP6 ..... 15/29
6SL3097-4AH00-0PP6 ..... 15/29
6SL3097-4AH00-0RP6 ..... 15/29
6SL3097-4AH00-0TP4 ..... 15/29

Page

6SL (continued)

6SL3097-4AL00-0AP5 ..... 15/29
6SL3097-4AL00-0BP5 ..... 15/29
6SL3097-4AL00-0CP5 ..... 15/29
6SL3097-4AL00-0DP5 ..... 15/29
6SL3097-4AL00-0EP5 ..... 15/29
6SL3097-4AL00-0RP5 ..... 15/29
6SL3097-4AL00-0TP5 ..... 15/29
6SL3097-4AM00-0AP7 ..... 15/29
6SL3097-4AM00-0BP7 ..... 15/29
6SL3097-4AM00-0CP7 ..... 15/29
6SL3097-4AM00-0DP7 ..... 15/29
6SL3097-4AM00-0EP7 ..... 15/29
6SL3097-4AM00-0PP7 ..... 15/29
6SL3097-4AM00-0RP7 ..... 15/29
6SL3097-4AP00-0AP8 ..... 15/29
6SL3097-4AP00-0BP8 ..... 15/29
6SL3097-4AP00-0CP8 ..... 15/29
6SL3097-4AP00-0DP8 ..... 15/29
6SL3097-4AP00-0EP8 ..... 15/29
6SL3097-4AP00-0KP8 ..... 15/29
6SL3097-4AP00-0PP8 ..... 15/29
6SL3097-4AP00-0RP8 ..... 15/29
6SL3097-4AP00-0TP8 ..... 15/29
6SL3097-4AR00-0AP6 ..... 15/29
6SL3097-4AR00-0BP6 ..... 15/29
6SL3097-4AR00-0CP6 ..... 15/29
6SL3097-4AR00-0DP6 ..... 15/29
6SL3097-4AR00-0EP6 ..... 15/29
6SL3097-4AR00-0PP6 ..... 15/29
6SL3097-4AR00-0RP6 ..... 15/29
6SL3097-4AW00-0AP3 ..... 15/29
6SL3097-4AW00-0BP3 ..... 15/29
6SL3097-4AW00-0CP3 ..... 15/29
6SL3097-4AW00-0DP3 ..... 15/29
6SL3097-4AW00-0EP3 ..... 15/29
6SL3097-4AW00-0RP3 ..... 15/29
6SL3100-0BE21-6AB0 ..... 7/35
6SL3100-0BE23-6AB0 ..... 7/35
6SL3100-0BE25-5AB0 ..... 7/35
6SL3100-0BE28-0AB0 ..... 7/35
6SL3100-0BE31-2AB0 ..... 7/35
6SL3100-1AE31-0AB1 ..... 7/95
6SL3100-1BE31-0AA0 ..... 7/97
6SL3100-1CE14-0AA0 ..... 7/99
6SL3100-1DE22-0AA1 ..... 7/100

© Siemens AG 2017

Page

6SL *(continued)*

6SL3120-1TE13-0AD0 ..... 7/71
6SL3120-1TE15-0AD0 ..... 7/71
6SL3120-1TE21-0AD0 ..... 7/71
6SL3120-1TE21-8AC0 ..... 7/71
6SL3120-1TE21-8AD0 ..... 7/71
6SL3120-1TE23-0AC0 ..... 7/71
6SL3120-1TE23-0AD0 ..... 7/71
6SL3120-1TE24-5AA3 ..... 7/71
6SL3120-1TE26-0AA3 ..... 7/71
6SL3120-1TE28-5AA3 ..... 7/71
6SL3120-1TE31-3AA3 ..... 7/71
6SL3120-1TE32-0AA4 ..... 7/71
6SL3120-2TE13-0AD0 ..... 7/88
6SL3120-2TE15-0AD0 ..... 7/88
6SL3120-2TE21-0AD0 ..... 7/88
6SL3120-2TE21-8AC0 ..... 7/88
6SL3120-2TE21-8AD0 ..... 7/88
6SL3130-1TE22-0AA0 ..... 7/57
6SL3130-1TE24-0AA0 ..... 7/57
6SL3130-1TE31-0AA0 ..... 7/57
6SL3130-6AE15-0AB1 ..... 7/48
6SL3130-6AE21-0AB1 ..... 7/48
6SL3130-6TE21-6AA4 ..... 7/48
6SL3130-6TE23-6AA3 ..... 7/48
6SL3130-6TE25-5AA3 ..... 7/48
6SL3130-7TE21-6AA4 ..... 7/32
6SL3130-7TE23-6AA3 ..... 7/32
6SL3130-7TE25-5AA3 ..... 7/32
6SL3130-7TE28-0AA3 ..... 7/32
6SL3130-7TE31-2AA3 ..... 7/32
6SL3160-8CD10-0AA0 ..... 7/35
6SL3160-8DF10-0AA0 ..... 7/35
6SL3160-8EH10-0AA0 ..... 7/35
6SL3160-8FM10-0AA0 ..... 7/35
6SL3162-0AN00-0AA0 ..... 7/72, 7/88
6SL3162-0AP00-0AA0 ..... 7/72, 7/88
6SL3162-1AF00-0AA1 ..... 7/32, 7/48, 7/57, 7/72
6SL3162-1AH00-0AA0 ..... 7/32, 7/72
6SL3162-1AH01-0AA0 ..... 7/32, 7/48, 7/57, 7/72
6SL3162-2AA00-0AA0 ..... 7/32, 7/41, 7/48, 7/57, 7/66, 7/72, 7/82, 7/88
6SL3162-2AA01-0AA0 ..... 7/32, 7/41, 7/48, 7/57, 7/66, 7/72, 7/82, 7/88
6SL3162-2BD00-0AA0 ..... 7/32, 7/41, 7/48, 7/57, 7/66, 7/72, 7/82, 7/88, 7/102, 13/44
6SL3162-2BM00-0AA0 ..... 7/32, 7/48, 7/57, 7/72, 7/102, 13/44
6SL3162-2BM01-0AA0 ..... 7/32, 7/41, 7/48, 7/57, 7/66, 7/72, 7/82, 7/88, 7/102
6SL3162-2BM10-0AA0 ..... 7/102
6SL3162-2DB00-0AA0 ..... 7/72, 7/88
6SL3162-2DD00-0AA0 ..... 7/72, 7/88
6SL3162-2MA00-0AC0 ..... 7/72, 7/88, 12/53
6SL3162-2MB00-0AC0 ..... 7/72, 7/88, 12/53

Page

6SL *(continued)*

6SL3162-8AC00-0AA0 ..... 7/72
6SL3162-8AD00-0AA0 ..... 7/88
6SL3162-8BE00-0AA0 ..... 7/72
6SL3162-8BF00-0AA0 ..... 7/88
6SL3162-8CF00-0AA0 ..... 7/72
6SL3162-8DH00-0AA0 ..... 7/72
6SL3162-8EM00-0AA0 ..... 7/72
6SL3163-1AF00-0AA0 ..... 7/35
6SL3163-1AH00-0AA0 ..... 7/35
6SL3163-1AM00-0AA0 ..... 7/35
6SL3163-8FD00-0AA0 ..... 7/32, 7/48
6SL3163-8GF00-0AA0 ..... 7/32, 7/48
6SL3163-8GF00-0AA0 ..... 7/57
6SL3163-8HH00-0AA0 ..... 7/32, 7/48, 7/57
6SL3163-8JM00-0AA0 ..... 7/32
6SL3163-8KB00-0AA1 ..... 7/48
6SL3163-8LD00-0AA0 ..... 7/57
6SL3166-3AB00-0AA0 ..... 7/32, 7/35, 7/41, 7/48, 7/57, 7/66, 7/72, 7/82, 7/88, 7/93, 7/95, 7/99, 7/100
6SL3201-0BE14-3AA0 ..... 7/268
6SL3201-0BE21-0AA0 ..... 7/268, 7/269
6SL3201-0BE21-8AA0 ..... 7/268, 7/269
6SL3201-0BE23-8AA0 ..... 7/268, 7/269
6SL3202-0AE16-1CA0 ..... 7/274
6SL3202-0AE18-8CA0 ..... 7/274
6SL3202-0AE21-8CA0 ..... 7/274
6SL3202-0AE23-8CA0 ..... 7/274
6SL3203-0BE17-7BA0 ..... 7/260, 7/261
6SL3203-0BE21-8BA0 ..... 7/260, 7/261
6SL3203-0BE23-8BA0 ..... 7/260, 7/261
6SL3203-0CE13-2AA0 ..... 7/263
6SL3203-0CE21-0AA0 ..... 7/263
6SL3203-0CE23-8AA0 ..... 7/263
6SL3210-1PB13-0AL0 ..... 7/240
6SL3210-1PB13-0UL0 ..... 7/240
6SL3210-1PB13-8AL0 ..... 7/240
6SL3210-1PB13-8UL0 ..... 7/240
6SL3210-1PB15-5AL0 ..... 7/240
6SL3210-1PB15-5UL0 ..... 7/240
6SL3210-1PB17-4AL0 ..... 7/240
6SL3210-1PB17-4UL0 ..... 7/240
6SL3210-1PB21-0AL0 ..... 7/240
6SL3210-1PB21-0UL0 ..... 7/240
6SL3210-1PB21-4AL0 ..... 7/240
6SL3210-1PB21-4UL0 ..... 7/240
6SL3210-1PB21-8AL0 ..... 7/240
6SL3210-1PB21-8UL0 ..... 7/240
6SL3210-1PC22-2AL0 ..... 7/240
6SL3210-1PC22-2UL0 ..... 7/240
6SL3210-1PC22-8AL0 ..... 7/240
6SL3210-1PC22-8UL0 ..... 7/240
6SL3210-1PC24-2UL0 ..... 7/240
6SL3210-1PC25-4UL0 ..... 7/240
6SL3210-1PC26-8UL0 ..... 7/240
6SL3210-1PC28-0UL0 ..... 7/240
6SL3210-1PC31-1UL0 ..... 7/240
6SL3210-1PC31-3UL0 ..... 7/240
6SL3210-1PC31-6UL0 ..... 7/240
6SL3210-1PC31-8UL0 ..... 7/240

Page

6SL *(continued)*

6SL3210-1PE11-8AL1 ..... 7/240
6SL3210-1PE11-8UL1 ..... 7/240
6SL3210-1PE12-3AL1 ..... 7/240
6SL3210-1PE12-3UL1 ..... 7/240
6SL3210-1PE13-2AL1 ..... 7/240
6SL3210-1PE13-2UL1 ..... 7/240
6SL3210-1PE14-3AL1 ..... 7/240
6SL3210-1PE14-3UL1 ..... 7/240
6SL3210-1PE16-1AL1 ..... 7/240
6SL3210-1PE16-1UL1 ..... 7/240
6SL3210-1PE18-0AL1 ..... 7/240
6SL3210-1PE18-0UL1 ..... 7/240
6SL3210-1PE21-1AL0 ..... 7/240
6SL3210-1PE21-1UL0 ..... 7/240
6SL3210-1PE21-4AL0 ..... 7/240
6SL3210-1PE21-4UL0 ..... 7/240
6SL3210-1PE21-8AL0 ..... 7/240
6SL3210-1PE21-8UL0 ..... 7/240
6SL3210-1PE22-7AL0 ..... 7/240
6SL3210-1PE22-7UL0 ..... 7/240
6SL3210-1PE23-3AL0 ..... 7/240
6SL3210-1PE23-3UL0 ..... 7/240
6SL3210-1PE23-8AL0 ..... 7/240
6SL3210-1PE23-8UL0 ..... 7/240
6SL3210-1PE24-5AL0 ..... 7/240
6SL3210-1PE24-5UL0 ..... 7/240
6SL3210-1PE26-0AL0 ..... 7/240
6SL3210-1PE26-0UL0 ..... 7/240
6SL3210-1PE27-5AL0 ..... 7/240
6SL3210-1PE27-5UL0 ..... 7/240
6SL3210-1PE28-8AL0 ..... 7/240
6SL3210-1PE28-8UL0 ..... 7/240
6SL3210-1PE31-1AL0 ..... 7/240
6SL3210-1PE31-1UL0 ..... 7/240
6SL3210-1PE31-5AL0 ..... 7/240
6SL3210-1PE31-5UL0 ..... 7/240
6SL3210-1PE31-8AL0 ..... 7/240
6SL3210-1PE31-8UL0 ..... 7/240
6SL3210-1PE32-1AL0 ..... 7/241
6SL3210-1PE32-1UL0 ..... 7/241
6SL3210-1PE32-5AL0 ..... 7/241
6SL3210-1PE32-5UL0 ..... 7/241
6SL3210-1PH21-4AL0 ..... 7/241
6SL3210-1PH21-4UL0 ..... 7/241
6SL3210-1PH22-0AL0 ..... 7/241
6SL3210-1PH22-0UL0 ..... 7/241
6SL3210-1PH22-3AL0 ..... 7/241
6SL3210-1PH22-3UL0 ..... 7/241
6SL3210-1PH22-7AL0 ..... 7/241
6SL3210-1PH22-7UL0 ..... 7/241
6SL3210-1PH23-5AL0 ..... 7/241
6SL3210-1PH23-5UL0 ..... 7/241
6SL3210-1PH24-2AL0 ..... 7/241
6SL3210-1PH24-2UL0 ..... 7/241
6SL3210-1PH25-2AL0 ..... 7/241
6SL3210-1PH25-2UL0 ..... 7/241
6SL3210-1PH26-2AL0 ..... 7/241
6SL3210-1PH26-2UL0 ..... 7/241
6SL3210-1PH28-0AL0 ..... 7/241
6SL3210-1PH28-0UL0 ..... 7/241
6SL3210-1PH31-0AL0 ..... 7/241
6SL3210-1PH31-0UL0 ..... 7/241

© Siemens AG 2017

Article number index

Page

6SL (continued)

6SL3210-1PH31-2AL0 ..... 7/241
6SL3210-1PH31-2UL0 ..... 7/241
6SL3210-1PH31-4AL0 ..... 7/241
6SL3210-1PH31-4UL0 ..... 7/241
6SL3211-1PB13-8AL0 ..... 7/241
6SL3211-1PB13-8UL0 ..... 7/241
6SL3211-1PB21-0AL0 ..... 7/241
6SL3211-1PB21-0UL0 ..... 7/241
6SL3211-1PB21-8AL0 ..... 7/241
6SL3211-1PB21-8UL0 ..... 7/241
6SL3211-1PE18-0AL1 ..... 7/241
6SL3211-1PE18-0UL1 ..... 7/241
6SL3211-1PE21-8AL0 ..... 7/241
6SL3211-1PE21-8UL0 ..... 7/241
6SL3211-1PE23-3AL0 ..... 7/241
6SL3211-1PE23-3UL0 ..... 7/241
6SL3252-0BB01-0AA0 ..... 7/278
6SL3260-6AA00-0DA0 ..... 7/277
6SL3260-6AB00-0DA0 ..... 7/277
6SL3260-6AC00-0DA0 ..... 7/277
6SL3300-1AE31-3AA0 ..... 7/212
6SL3300-1AE32-5AA0 ..... 7/212
6SL3300-1AE32-5BA0 ..... 7/212
6SL3300-1AF31-3AA0 ..... 7/212
6SL3300-1AF32-5AA0 ..... 7/212
6SL3300-1AF32-5BA0 ..... 7/212
6SL3300-1AH31-3AA0 ..... 7/212
6SL3300-1AH32-5AA0 ..... 7/212
6SL3300-1AH32-5BA0 ..... 7/212
6SL3300-7TE32-6AA0 ..... 7/129
6SL3300-7TE33-8AA0 ..... 7/129
6SL3300-7TE35-0AA0 ..... 7/129
6SL3300-7TE38-4AA0 ..... 7/129
6SL3300-7TE41-4AA0 ..... 7/129
6SL3300-7TG35-8AA0 ..... 7/129
6SL3300-7TG37-4AA0 ..... 7/129
6SL3300-7TG41-3AA0 ..... 7/129
6SL3305-7TE41-4AA3 ..... 7/179
6SL3305-7TG37-4AA3 ..... 7/179
6SL3305-7TG41-0AA3 ..... 7/179
6SL3305-7TG41-3AA3 ..... 7/179
6SL3305-7TG41-6AA3 ..... 7/179
6SL3310-1TE32-1AA3 ..... 7/120
6SL3310-1TE32-6AA3 ..... 7/120
6SL3310-1TE33-1AA3 ..... 7/120
6SL3310-1TE33-8AA3 ..... 7/120
6SL3310-1TE35-0AA3 ..... 7/120
6SL3315-1TE32-1AA3 ..... 7/171
6SL3315-1TE32-6AA3 ..... 7/171
6SL3315-1TE33-1AA3 ..... 7/171
6SL3315-1TE35-0AA3 ..... 7/171
6SL3320-1TE32-1AA3 ..... 7/145
6SL3320-1TE32-6AA3 ..... 7/145
6SL3320-1TE33-1AA3 ..... 7/145
6SL3320-1TE33-8AA3 ..... 7/145
6SL3320-1TE35-0AA3 ..... 7/145
6SL3320-1TE36-1AA3 ..... 7/145
6SL3320-1TE37-5AA3 ..... 7/145
6SL3320-1TE38-4AA3 ..... 7/145
6SL3320-1TE41-0AA3 ..... 7/145
6SL3320-1TE41-2AA3 ..... 7/145
6SL3320-1TE41-4AA3 ..... 7/145

Page

6SL (continued)

6SL3320-1TG28-5AA3 ..... 7/145
6SL3320-1TG31-0AA3 ..... 7/145
6SL3320-1TG31-2AA3 ..... 7/145
6SL3320-1TG31-5AA3 ..... 7/145
6SL3320-1TG31-8AA3 ..... 7/145
6SL3320-1TG32-2AA3 ..... 7/145
6SL3320-1TG32-6AA3 ..... 7/145
6SL3320-1TG33-3AA3 ..... 7/145
6SL3320-1TG34-1AA3 ..... 7/145
6SL3320-1TG34-7AA3 ..... 7/145
6SL3320-1TG35-8AA3 ..... 7/145
6SL3320-1TG37-4AA3 ..... 7/145
6SL3320-1TG38-1AA3 ..... 7/145
6SL3320-1TG38-8AA3 ..... 7/145
6SL3320-1TG41-0AA3 ..... 7/145
6SL3320-1TG41-3AA3 ..... 7/145
6SL3325-1TE32-1AA3 ..... 7/187
6SL3325-1TE32-6AA3 ..... 7/187
6SL3325-1TE33-1AA3 ..... 7/187
6SL3325-1TE35-0AA3 ..... 7/187
6SL3325-1TE36-1AA3 ..... 7/187
6SL3325-1TE37-5AA3 ..... 7/187
6SL3325-1TE38-4AA3 ..... 7/187
6SL3325-1TE41-0AA3 ..... 7/187
6SL3325-1TE41-2AA3 ..... 7/187
6SL3325-1TE41-4AA3 ..... 7/187
6SL3325-1TE41-4AS3 ..... 7/187
6SL3325-1TG31-0AA3 ..... 7/187
6SL3325-1TG31-5AA3 ..... 7/187
6SL3325-1TG32-2AA3 ..... 7/187
6SL3325-1TG33-3AA3 ..... 7/187
6SL3325-1TG34-7AA3 ..... 7/187
6SL3325-1TG35-8AA3 ..... 7/187
6SL3325-1TG37-4AA3 ..... 7/187
6SL3325-1TG38-0AA3 ..... 7/187
6SL3325-1TG38-1AA3 ..... 7/187
6SL3325-1TG41-0AA3 ..... 7/187
6SL3325-1TG41-3AA3 ..... 7/187
6SL3325-1TG41-6AA3 ..... 7/187
6SL3330-1TE34-2AA3 ..... 7/140
6SL3330-1TE35-3AA3 ..... 7/140
6SL3330-1TE38-2AA3 ..... 7/140
6SL3330-1TE41-2AA3 ..... 7/140
6SL3330-1TE41-5AA3 ..... 7/140
6SL3330-1TE41-8AA3 ..... 7/140
6SL3330-1TG33-0AA3 ..... 7/140
6SL3330-1TG34-3AA3 ..... 7/140
6SL3330-1TG36-8AA3 ..... 7/140
6SL3330-1TG41-1AA3 ..... 7/140
6SL3330-1TG41-4AA3 ..... 7/140
6SL3330-1TG41-8AA3 ..... 7/140
6SL3330-6TE35-5AA3 ..... 7/135
6SL3330-6TE37-3AA3 ..... 7/135
6SL3330-6TE41-1AA3 ..... 7/135
6SL3330-6TE41-3AA3 ..... 7/135
6SL3330-6TE41-7AA3 ..... 7/135
6SL3330-6TG35-5AA3 ..... 7/135
6SL3330-6TG38-8AA3 ..... 7/135
6SL3330-6TG41-2AA3 ..... 7/135
6SL3330-6TG41-7AA3 ..... 7/135

Page

6SL (continued)

6SL3330-7TE32-1AA3 ..... 7/124
6SL3330-7TE32-6AA3 ..... 7/124
6SL3330-7TE33-8AA3 ..... 7/124
6SL3330-7TE35-0AA3 ..... 7/124
6SL3330-7TE36-1AA3 ..... 7/124
6SL3330-7TE37-5AA3 ..... 7/124
6SL3330-7TE38-4AA3 ..... 7/124
6SL3330-7TE41-0AA3 ..... 7/124
6SL3330-7TE41-2AA3 ..... 7/124
6SL3330-7TE41-4AA3 ..... 7/124
6SL3330-7TG35-8AA3 ..... 7/124
6SL3330-7TG37-4AA3 ..... 7/124
6SL3330-7TG41-0AA3 ..... 7/124
6SL3330-7TG41-3AA3 ..... 7/124
6SL3335-1TE37-4AA3 ..... 7/183
6SL3335-1TE41-2AA3 ..... 7/183
6SL3335-1TE41-7AA3 ..... 7/183
6SL3335-1TG34-2AA3 ..... 7/183
6SL3335-1TG37-3AA3 ..... 7/183
6SL3335-1TG41-3AA3 ..... 7/183
6SL3335-1TG41-7AA3 ..... 7/183
6SL3335-7TE35-0AA3 ..... 7/175
6SL3335-7TE36-1AA3 ..... 7/175
6SL3335-7TE38-4AA3 ..... 7/175
6SL3335-7TE41-0AA3 ..... 7/175
6SL3335-7TE41-4AA3 ..... 7/175
6SL3335-7TG35-8AA3 ..... 7/175
6SL3335-7TG37-4AA3 ..... 7/175
6SL3335-7TG38-1AA3 ..... 7/175
6SL3335-7TG41-0AA3 ..... 7/175
6SL3335-7TG41-3AA3 ..... 7/175
6SL3335-7TG41-6AA3 ..... 7/175
6SL3355-2DX00-1AA0 ..... 7/236
6SL3366-2NG00-0AA0 ..... 7/212
6SL3400-1AE31-0AA1 ..... 7/93
6SL3420-1TE13-0AA1 ..... 7/66
6SL3420-1TE15-0AA1 ..... 7/66
6SL3420-1TE21-0AA1 ..... 7/66
6SL3420-1TE21-8AA1 ..... 7/66
6SL3420-2TE11-7AA1 ..... 7/82
6SL3420-2TE13-0AA1 ..... 7/82
6SL3420-2TE15-0AA1 ..... 7/82
6SL3430-6TE21-6AA1 ..... 7/41
6SL3462-1CC00-0AA0 ..... 7/66, 7/82, 7/93, 7/108
6SL3532-6DF71-0R 7/108
6SL3540-6DF71-0R 7/108
6SL3542-6DF71-0R 7/108
6SL3555-0AA00-6AB0 ..... 7/108
6SL3555-2DA00-0AA0 ..... 7/108
6SL3562-6DF71-0R 7/108
6SL3563-6DF71-0R 7/108
6SL3760-0MB00-0AA0 ..... 7/199
6SL3760-0MC00-0AA0 ..... 7/199
6SL3760-0ME00-0AA0 ..... 7/199
6SL3760-0MG00-0AA0 ..... 7/199
6SL3760-0MN00-0AA0 ..... 7/199
6SL3766-1FA00-0AA0 ..... 7/162

© Siemens AG 2017

Page

6SN

6SN1113-1AA00-0DA0 ..... 7/97
6SN1113-1AA00-1JA1 ..... 9/100
6SN1113-1AA00-1KA1 ..... 9/100
6SN1113-1AA00-1KC1 ..... 9/100
6SN1197-0AB10-0AP5 ..... 15/30
6SN1197-0AB10-0BP5 ..... 15/30
6SN1197-0AB78-0AP3 ..... 15/30
6SN1197-0AB78-0BP3 ..... 15/30
6SN1197-0AB86-0AP1 ..... 15/30
6SN1197-0AB86-0BP1 ..... 15/30
6SN1197-0AC01-0AP0 ..... 15/30
6SN1197-0AC01-0BP0 ..... 15/30
6SN1197-0AD13-0AP5 ..... 15/30
6SN1197-0AD13-0BP5 ..... 15/30
6SN1197-0AD16-0AP4 ..... 15/30
6SN1197-0AD16-0BP4 ..... 15/30
6SN1197-0AD16-0CP4 ..... 15/30
6SN1197-0AD16-0DP4 ..... 15/30
6SN1197-0AD16-0EP4 ..... 15/30
6SN1197-0AD16-0PP0 ..... 15/30
6SN1197-0AD16-0RP4 ..... 15/30
6SN1197-0AD70-0AP8 ..... 15/30
6SN1197-0AD70-0BP8 ..... 15/30
6SN1197-0AD74-0AP2 ..... 15/30
6SN1197-0AD74-0BP1 ..... 15/30
6SN1197-0AD74-0CP1 ..... 15/30
6SN1197-0AD74-0DP1 ..... 15/30
6SN1197-0AD74-0EP1 ..... 15/30
6SN1197-0AD74-0RP1 ..... 15/30
6SN1197-0AD78-0CP3 ..... 15/30
6SN1197-0AD78-0DP3 ..... 15/30
6SN1197-0AD78-0RP3 ..... 15/30
6SN1197-0AE00-0AP7 ..... 15/30
6SN1197-0AE00-0BP7 ..... 15/30
6SN1197-0AE01-0AP2 ..... 15/30
6SN1197-0AE01-0BP2 ..... 15/30
6SN1197-0AE01-0CP2 ..... 15/30
6SN1197-0AE01-0DP2 ..... 15/30
6SN1197-0AE01-0EP2 ..... 15/30
6SN1197-0AE01-0RP2 ..... 15/30

Page

6SW

6SW1700-0JD00-0AB2 ..... 13/11
6SW1700-5JD00-1AC0 ..... 13/11
6SW1700-8JD00-0AA0 ..... 13/11
6SW1700-8JD00-0AA4 ..... 13/11
6SW1700-8JD00-1AA0 ..... 13/11
6SW1700-8JD00-1AA4 ..... 13/11
6SW1700-8JD00-2AA0 ..... 13/11
6SW1700-8JD00-2AA4 ..... 13/11
6SW1700-8JD01-0AA0 ..... 13/11
6SW1700-8JD01-0AA4 ..... 13/11
6SW1700-8JD01-1AA0 ..... 13/11
6SW1700-8JD01-1AA4 ..... 13/11
6SW1700-8JD01-2AA0 ..... 13/11
6SW1700-8JD01-2AA4 ..... 13/11

Page

6XV

6XV1801-5DH20 ..... 11/14
6XV1801-5DH30 ..... 11/14
6XV1801-5DH50 ..... 11/14
6XV1801-5DN10 ..... 11/14
6XV1801-5DN15 ..... 11/14
6XV1840-2AH10 ..... 7/24
6XV1840-3AH10 ..... 7/24, 11/14
6XV1840-4AH10 ..... 7/24
6XV1870-2B 7/24
6XV1870-2D 7/24
6XV1871-5TH20 ..... 11/14
6XV1871-5TH30 ..... 11/14
6XV1871-5TH50 ..... 11/14
6XV1871-5TN10 ..... 11/14
6XV1871-5TN15 ..... 11/14

6ZB

6ZB2470-0AM00 ..... 15/12
6ZB2480-0CM00 ..... 15/12
6ZB2480-0CN00 ..... 15/12

© Siemens AG 2017

Article number index

Page

E86060

E86060-D4001-A500-D6 ..... 13/2
E86060-D4001-B510-A1 ..... 13/2

ISBN

ISBN 978-3-89578-189-6 ..... 15/28
ISBN 978-3-89578-293-0 ..... 15/28

JJY

JJY:023146720008 ..... 7/268, 7/269
JJY:023151720007 ..... 7/268, 7/269
JJY:023163720018 ..... 7/268, 7/269
JJY:023422620001 ..... 7/268
JJY:023422620002 ..... 7/268
JJY:023423320001 ..... 7/268
JJY:023424020001 ..... 7/268
JJY:023424020002 ..... 7/269
JJY:023433720001 ..... 7/268
JJY:023434020001 ..... 7/268
JJY:023434020002 ..... 7/269
JJY:023434020003 ..... 7/268
JJY:023454020001 ..... 7/268
JJY:023464020001 ..... 7/268
JJY:023464020002 ..... 7/269

SAX

SAX31... ..... 7/171, 7/175, 7/183, 7/187
SAX61... ..... 7/171, 7/175, 7/183, 7/187
SAX81... ..... 7/171, 7/175, 7/183, 7/187

VXF

VXF41... ..... 7/171, 7/175, 7/183, 7/187

VXG

VXG41... ..... 7/171, 7/175, 7/183, 7/187

© Siemens AG 2017

Rotary inertia (to convert from A to B, multiply by entry in table)

A \ B	lb-in^2	lb-ft^2	lb-in-s^2	lb-ft-s^2 slug-ft^2	kg-cm^2	kg-cm-s^2	gm-cm^2	gm-cm-s^2	oz-in^2	oz-in-s^2
lb-in^2	1	6.94×10^{-3}	2.59×10^{-3}	2.15×10^{-4}	2.926	2.98×10^{-3}	2.92×10^{3}	2.984	16	4.14×10^{-2}
lb-ft^2	144	1	0.3729	3.10×10^{-2}	421.40	0.4297	4.21×10^{5}	429.71	2304	5.967
lb-in-s^2	386.08	2.681	1	8.33×10^{-2}	1.129×10^{3}	1.152	1.129×10^{6}	1.152×10^{3}	6.177×10^{3}	16
lb-ft-s^2 slug-ft^2	4.63×10^{3}	32.17	12	1	1.35×10^{4}	13.825	1.355×10^{7}	1.38×10^{4}	7.41×10^{4}	192
kg-cm^2	0.3417	2.37×10^{-3}	8.85×10^{-4}	7.37×10^{-5}	1	1.019×10^{-3}	1000	1.019	5.46	1.41×10^{-2}
kg-cm-s^2	335.1	2.327	0.8679	7.23×10^{-2}	980.66	1	9.8×10^{5}	1000	5.36×10^{3}	13.887
gm-cm^2	3.417×10^{-4}	2.37×10^{-6}	8.85×10^{-7}	7.37×10^{-8}	1×10^{-3}	1.01×10^{-6}	1	1.01×10^{-3}	5.46×10^{-3}	1.41×10^{-5}
gm-cm-s^2	0.335	2.32×10^{-3}	8.67×10^{-4}	7.23×10^{-5}	0.9806	1×10^{-3}	980.6	1	5.36	1.38×10^{-2}
oz-in^2	0.0625	4.34×10^{-4}	1.61×10^{-4}	1.34×10^{-5}	0.182	1.86×10^{-4}	182.9	0.186	1	2.59×10^{-3}
oz-in-s^2	24.13	0.1675	6.25×10^{-2}	5.20×10^{-3}	70.615	7.20×10^{-2}	7.09×10^{4}	72.0	386.08	1

Torque (to convert from A to B, multiply by entry in table)

A \ B	lb-in	lb-ft	oz-in	N-m	kg-cm	kg-m	gm-cm	dyne-cm
lb-in	1	8.333×10^{-2}	16	0.113	1.152	1.152×10^{-2}	1.152×10^{3}	1.129×10^{6}
lb-ft	12	1	192	1.355	13.825	0.138	1.382×10^{4}	1.355×10^{7}
oz-in	6.25×10^{-2}	5.208×10^{-3}	1	7.061×10^{-3}	7.200×10^{-2}	7.200×10^{-4}	72.007	7.061×10^{4}
N-m	8.850	0.737	141.612	1	10.197	0.102	1.019×10^{4}	1×10^{7}
kg-cm	0.8679	7.233×10^{-2}	13.877	9.806×10^{-2}	1	10^{-2}	1000	9.806×10^{5}
kg-m	86.796	7.233	1.388×10^{3}	9.806	100	1	1×10^{5}	9.806×10^{7}
gm-cm	8.679×10^{-4}	7.233×10^{-5}	1.388×10^{-2}	9.806×10^{-5}	1×10^{-3}	1×10^{-5}	1	980.665
dyne-cm	8.850×10^{-7}	7.375×10^{-8}	1.416×10^{-5}	10^{-7}	1.0197×10^{-6}	1.019×10^{-8}	1.019×10^{-3}	1

Length (to convert from A to B, multiply by entry in table)

A \ B	inches	feet	cm	yd	mm	m
inches	1	0.0833	2.54	0.028	25.4	0.0254
feet	12	1	30.48	0.333	304.8	0.3048
cm	0.3937	0.03281	1	1.09×10^{-2}	10	0.01
yd	36	3	91.44	1	914.4	0.914
mm	0.03937	0.00328	0.1	1.09×10^{-3}	1	0.001
m	39.37	3.281	100	1.09	1000	1

Power (to convert from A to B, multiply by entry in table)

A \ B	hp	Watts
hp (English)	1	745.7
(lb-in) (deg./s)	2.645×10^{-6}	1.972×10^{-3}
(lb-in) (rpm)	1.587×10^{-5}	1.183×10^{-2}
(lb-ft) (deg./s)	3.173×10^{-5}	2.366×10^{-2}
(lb-ft) (rpm)	1.904×10^{-4}	0.1420
Watts	1.341×10^{-3}	1

Force (to convert from A to B, multiply by entry in table)

A \ B	lb	oz	gm	dyne	N
lb	1	16	453.6	4.448×10^{5}	4.4482
oz	0.0625	1	28.35	2.780×10^{4}	0.27801
gm	2.205×10^{-3}	0.03527	1	1.02×10^{-3}	N.A.
dyne	2.248×10^{-6}	3.59×10^{-5}	980.7	1	0.00001
N	0.22481	3.5967	N.A.	100000	1

Mass (to convert from A to B, multiply by entry in table)

A \ B	lb	oz	gm	kg	slug
lb	1	16	453.6	0.4536	0.0311
oz	6.25×10^{-2}	1	28.35	0.02835	1.93×10^{-3}
gm	2.205×10^{-3}	3.527×10^{-2}	1	10^{-3}	6.852×10^{-5}
kg	2.205	35.27	10^{3}	1	6.852×10^{-2}
slug	32.17	514.8	1.459×10^{4}	14.59	1

Rotation (to convert from A to B, multiply by entry in table)

A \ B	rpm	rad/s	degrees/s
rpm	1	0.105	6.0
rad/s	9.55	1	57.30
degrees/s	0.167	1.745×10^{-2}	1

© Siemens AG 2017

Conversion tables

Temperature Conversion

°F	°C	°C	°F
0	–17.8	–10	14
32	0	0	32
50	10	10	50
70	21.1	20	68
90	32.2	30	86
98.4	37	37	98.4
212	100	100	212
subtract 32 and multiply by $^5/_9$		multiply by $^9/_5$ and add 32	

Mechanism Efficiencies

Acme-screw with brass nut	~0.35–0.65
Acme-screw with plastic nut	~0.50–0.85
Ball-screw	~0.85–0.95
Chain and sprocket	~0.95–0.98
Preloaded ball-screw	~0.75–0.85
Spur or bevel-gears	~0.90
Timing belts	~0.96–0.98
Worm gears	~0.45–0.85
Helical gear (1 reduction)	~0.92

Friction Coefficients

Materials	μ
Steel on steel (greased)	~0.15
Plastic on steel	~0.15–0.25
Copper on steel	~0.30
Brass on steel	~0.35
Aluminum on steel	~0.45
Steel on steel	~0.58

Mechanism	μ
Ball bushings	<0.001
Linear bearings	<0.001
Dove-tail slides	~0.2++
Gibb ways	~0.5++

Material Densities

Material	lb-in^3	gm-cm^3
Aluminum	0.096	2.66
Brass	0.299	8.30
Bronze	0.295	8.17
Copper	0.322	8.91
Hard wood	0.029	0.80
Soft wood	0.018	0.48
Plastic	0.040	1.11
Glass	0.079–0.090	2.2–2.5
Titanium	0.163	4.51
Paper	0.025–0.043	0.7–1.2
Polyvinyl chloride	0.047–0.050	1.3–1.4
Rubber	0.033–0.036	0.92–0.99
Silicone rubber, without filler	0.043	1.2
Cast iron, gray	0.274	7.6
Steel	0.280	7.75

Wire Gauges[1)]

Cross-section mm^2	Standard Wire Gauge (SWG)	American Wire Gauge (AWG)
0.2	25	24
0.3	23	22
0.5	21	20
0.75	20	19
1.0	19	18
1.5	17	16
2.5	15	13
4	13	11
6	12	9
10	9	7
16	7	6
25	5	3
35	3	2
50	0	1/0
70	000	2/0
95	00000	3/0
120	0000000	4/0
150	–	6/0
185	–	7/0

[1)] The table shows approximate SWG/AWG sizes nearest to standard metric sizes; the cross-sections do not match exactly.

© Siemens AG 2017

Explanation of the raw material/metal surcharges [1]

Surcharge calculation

To compensate for variations in the price of the raw materials silver, copper, aluminum, lead, gold, dysprosium [2] and/or neodym [2], surcharges are calculated on a daily basis using the so-called metal factor for products containing these raw materials. A surcharge for the respective raw material is calculated as a supplement to the price of a product if the basic official price of the raw material in question is exceeded.

The surcharges are calculated in accordance with the following criteria:

- Basic official price of the raw material
  Basic official price from the day prior to receipt of the order or prior to release order (daily price) for [3]
  - Silver (sales price, processed)
  - Gold (sales price, processed)

  and for [4]
  - Copper (lower DEL notation + 1 %)
  - Aluminum (aluminum in cables)
  - Lead (lead in cables)
- Metal factor of the products
  Certain products are displayed with a metal factor. The metal factor determines the official price (for those raw materials concerned) as of which the metal surcharges are applied and the calculation method used (weight or percentage method). An exact explanation is given below.

Structure of the metal factor

The metal factor consists of several digits; the first digit indicates whether the percentage method of calculation refers to the list price or a possible discounted price (customer net price) (L = list price / N = customer net price).

The remaining digits indicate the method of calculation used for the respective raw material. If no surcharge is added for a raw material, a "-" is used.

1st digit	List or customer net price using the percentage method
2nd digit	for silver (AG)
3rd digit	for copper (CU)
4th digit	for aluminum (AL)
5th digit	for lead (PB)
6th digit	for gold (AU)
7th digit	for dysprosium (Dy) [2]
8th digit	for neodym (Nd) [2]

Weight method

The weight method uses the basic official price, the daily price and the raw material weight. In order to calculate the surcharge, the basic official price must be subtracted from the daily price. The difference is then multiplied by the raw material weight.

The basic official price can be found in the table below using the number (1 to 9) of the respective digit of the metal factor. The raw material weight can be found in the respective product descriptions.

Percentage method

Use of the percentage method is indicated by the letters A-Z at the respective digit of the metal factor.

The surcharge is increased - dependent on the deviation of the daily price compared with the basic official price - using the percentage method in "steps" and consequently offers surcharges that remain constant within the framework of this "step range". A higher percentage rate is charged for each new step. The respective percentage level can be found in the table below.

Metal factor examples

L E A – – – – –

- Basis for % surcharge: List price
- Silver Basis 150 €, Step 50 €, 0.5 %
- Copper Basis 150 €, Step 50 €, 0.1 %
- No surcharge for aluminum
- No surcharge for lead
- No surcharge for gold
- No surcharge for dysprosium
- No surcharge for neodym

N – A 6 – – – –

- Basis for % surcharge: Customer net price
- No surcharge for silver
- Copper Basis 150 €, Step 50 €, 0.1 %
- Aluminum acc. to weight, basic offic. price 225 €
- No surcharge for lead
- No surcharge for gold
- No surcharge for dysprosium
- No surcharge for neodym

– – 3 – – – – –

- No basis necessary
- No surcharge for silver
- Copper acc. to weight, basic official price 150 €
- No surcharge for aluminum
- No surcharge for lead
- No surcharge for gold
- No surcharge for dysprosium
- No surcharge for neodym

[1] Refer to the separate explanation on the next page regarding the raw materials dysprosium and neodym (= rare earths).
[2] For a different method of calculation, refer to the separate explanation for these raw materials on the next page.
[3] Source: Umicore, Hanau (www.metalsmanagement.umicore.com).
[4] Source: Schutzvereinigung DEL-Notiz e.V. (www.del-notiz.org).

© Siemens AG 2017

Explanation of the raw material/metal surcharges for dysprosium and neodym (rare earths)

Surcharge calculation

To compensate for variations in the price of the raw materials silver [1], copper [1], aluminum [1], lead [1], gold [1], dysprosium and/or neodym, surcharges are calculated on a daily basis using the so-called metal factor for products containing these raw materials. The surcharge for dysprosium and neodym is calculated as a supplement to the price of a product if the basic official price of the raw material in question is exceeded.

The surcharge is calculated in accordance with the following criteria:

- Basic official price of the raw material [2]
  Three-month basic average price (see below) in the period before the quarter in which the order was received or the release order took place (= average official price) for
  - dysprosium (Dy metal, 99 % min. FOB China; USD/kg)
  - neodym (Nd metal, 99 % min. FOB China; USD/kg)
- Metal factor of the products
  Certain products are displayed with a metal factor. The metal factor indicates (for those raw materials concerned) the basic official price as of which the surcharges for dysprosium and neodym are calculated using the weight method. An exact explanation of the metal factor is given below.

Three-month average price

The prices of rare earths vary according to the foreign currency, and there is no freely accessible stock exchange listing. This makes it more difficult for all parties involved to monitor changes in price. In order to avoid continuous adjustment of the surcharges, but to still ensure fair, transparent pricing, an average price is calculated over a three-month period using the average monthly foreign exchange rate from USD to EUR (source: European Central Bank). Since not all facts are immediately available at the start of each month, a one-month buffer is allowed before the new average price applies.

Examples of calculation of the average official price:

Period for calculation of the average price:	Period during which the order/release order is effected and the average price applies:
Sep 2012 - Nov 2012	Q1 in 2013 (Jan - Mar)
Dec 2012 - Feb 2013	Q2 in 2013 (Apr - Jun)
Mar 2013 - May 2013	Q3 in 2013 (Jul - Sep)
Jun 2013 - Aug 2013	Q4 in 2013 (Oct - Dec)

Structure of the metal factor

The metal factor consists of several digits; the first digit is not relevant to the calculation of dysprosium and neodym.

The remaining digits indicate the method of calculation used for the respective raw material. If no surcharge is added for a raw material, a "-" is used.

1st digit	List or customer net price using the percentage method
2nd digit	for silver (AG) [1]
3rd digit	for copper (CU) [1]
4th digit	for aluminum (AL) [1]
5th digit	for lead (PB) [1]
6th digit	for gold (AU) [1]
7th digit	for dysprosium (Dy)
8th digit	for neodym (Nd)

Weight method

The weight method uses the basic official price, the average price and the raw material weight. In order to calculate the surcharge, the basic official price must be subtracted from the average price. The difference is then multiplied by the raw material weight.

The basic official price can be found in the table below using the number (1 to 9) of the respective digit of the metal factor. Your Sales contact can inform you of the raw material weight.

Metal factor examples

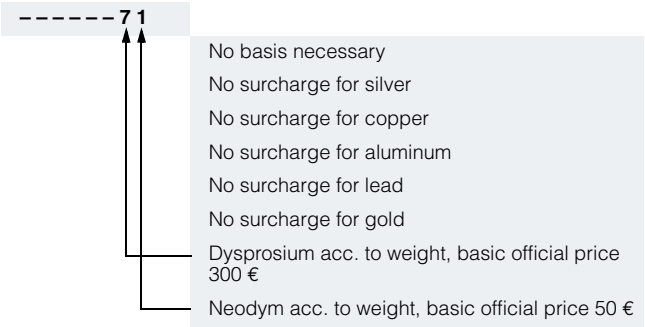

[1] For a different method of calculation, refer to the separate explanation for these raw materials on the previous page.
[2] Source: Asian Metal Ltd (www.asianmetal.com)

© Siemens AG 2017

Values of the metal factor

Percentage method	Basic official price in €	Step range in €	% surcharge 1st step Price in €	% surcharge 2nd step Price in €	% surcharge 3rd step Price in €	% surcharge 4th step Price in €	% surcharge per additional step
			150.01 - 200.00	200.01 - 250.00	250.01 - 300.00	300.01 - 350.00	
A	150	50	0.1	0.2	0.3	0.4	0.1
B	150	50	0.2	0.4	0.6	0.8	0.2
C	150	50	0.3	0.6	0.9	1.2	0.3
D	150	50	0.4	0.8	1.2	1.6	0.4
E	150	50	0.5	1.0	1.5	2.0	0.5
F	150	50	0.6	1.2	1.8	2.4	0.6
G	150	50	1.0	2.0	3.0	4.0	1.0
H	150	50	1.2	2.4	3.6	4.8	1.2
I	150	50	1.6	3.2	4.8	6.4	1.6
J	150	50	1.8	3.6	5.4	7.2	1.8
			175.01 - 225.00	225.01 - 275.00	275.01 - 325.00	325.01 - 375.00	
O	175	50	0.1	0.2	0.3	0.4	0.1
P	175	50	0.2	0.4	0.6	0.8	0.2
R	175	50	0.5	1.0	1.5	2.0	0.5
			225.01 - 275.00	275.01 - 325.00	325.01 - 375.00	375.01 - 425.00	
S	225	50	0.2	0.4	0.6	0.8	0.2
U	225	50	1.0	2.0	3.0	4.0	1.0
V	225	50	1.0	1.5	2.0	3.0	1.0
W	225	50	1.2	2.5	3.5	4.5	1.0
			150.01 - 175.00	175.01 - 200.00	200.01 - 225.00	225.01 - 250.00	
Y	150	25	0.3	0.6	0.9	1.2	0.3
			400.01 - 425.00	425.01 - 450.00	450.01 - 475.00	475.01 - 500.00	
Z	400	25	0.1	0.2	0.3	0.4	0.1
	Price basis (1st digit)						
L	Calculation based on the list price						
N	Calculation based on the customer net price (discounted list price)						
Weight method	**Basic official price in €**						
1	50	Calculation based on raw material weight					
2	100						
3	150						
4	175						
5	200						
6	225						
7	300						
8	400						
9	555						
Miscellaneous							
-	No metal surcharge						

© Siemens AG 2017

Conditions of sale and delivery

1. General Provisions

By using this catalog you can acquire hardware and software products described therein from Siemens AG subject to the following Terms and Conditions of Sale and Delivery (hereinafter referred to as "T&C"). Please note that the scope, the quality and the conditions for supplies and services, including software products, by any Siemens entity having a registered office outside Germany, shall be subject exclusively to the General Terms and Conditions of the respective Siemens entity. The following T&C apply exclusively for orders placed with Siemens Aktiengesellschaft, Germany.

1.1 For customers with a seat or registered office in Germany

For customers with a seat or registered office in Germany, the following applies subordinate to the T&C:

- the "General Terms of Payment" [1] and,
- for software products, the "General License Conditions for Software Products for Automation and Drives for Customers with a Seat or Registered Office in Germany" [1] and,
- for other supplies and services, the "General Conditions for the Supply of Products and Services of the Electrical and Electronics Industry" [1].

1.2 For customers with a seat or registered office outside Germany

For customers with a seat or registered office outside Germany, the following applies subordinate to the T&C:

- the "General Terms of Payment" [1] and,
- for software products, the "General License Conditions for Software Products for Automation and Drives for Customers with a Seat or Registered Office outside of Germany" [1] and
- for other supplies and/or services, the "General Conditions for Supplies of Siemens Industry for Customers with a Seat or Registered Office outside of Germany" [1].

2. Prices

The prices are in € (Euro) ex point of delivery, exclusive of packaging.

The sales tax (value added tax) is not included in the prices. It shall be charged separately at the respective rate according to the applicable statutory legal regulations.

Prices are subject to change without prior notice. We will charge the prices valid at the time of delivery.

To compensate for variations in the price of raw materials (e.g. silver, copper, aluminum, lead, gold, dysprosium and neodym), surcharges are calculated on a daily basis using the so-called metal factor for products containing these raw materials. A surcharge for the respective raw material is calculated as a supplement to the price of a product if the basic official price of the raw material in question is exceeded.

The metal factor of a product indicates the basic official price (for those raw materials concerned) as of which the surcharges on the price of the product are applied, and with what method of calculation.

You will find a detailed explanation of the metal factor on the page headed "Metal surcharges".

To calculate the surcharge (except in the cases of dysprosium and neodym), the official price from the day prior to that on which the order was received or the release order was effected is used.

To calculate the surcharge applicable to dysprosium and neodym ("rare earths"), the corresponding three-month basic average price in the quarter prior to that in which the order was received or the release order was effected is used with a one-month buffer (details on the calculation can be found in the explanation of the metal factor).

3. Additional Terms and Conditions

The dimensions are in mm. In Germany, according to the German law on units in measuring technology, data in inches apply only to devices for export.

Illustrations are not binding.

Insofar as there are no remarks on the individual pages of this catalog - especially with regard to data, dimensions and weights given - these are subject to change without prior notice.

4. Export regulations

We shall not be obligated to fulfill any agreement if such fulfillment is prevented by any impediments arising out of national or international foreign trade or customs requirements or any embargoes and/or other sanctions.

Export of goods listed in this catalog may be subject to licensing requirements. We will indicate in the delivery details whether licenses are required under German, European and US export lists. Goods labeled with "AL" not equal to "N" are subject to European or German export authorization when being exported out of the EU. Goods labeled with "ECCN" not equal to "N" are subject to US re-export authorization.

The export indications can be viewed in advance in the description of the respective goods on the Industry Mall, our online catalog system. Only the export labels "AL" and "ECCN" indicated on order confirmations, delivery notes and invoices are authoritative.

Even without a label, or with label "AL:N" or "ECCN:N", authorization may be required i.a. due to the final disposition and intended use of goods.

If you transfer goods (hardware and/or software and/or technology as well as corresponding documentation, regardless of the mode of provision) delivered by us or works and services (including all kinds of technical support) performed by us to a third party worldwide, you must comply with all applicable national and international (re-)export control regulations.

If required for the purpose of conducting export control checks, you (upon request by us) shall promptly provide us with all information pertaining to the particular end customer, final disposition and intended use of goods delivered by us respectively works and services provided by us, as well as to any export control restrictions existing in this relation.

The products listed in this catalog may be subject to European/German and/or US export regulations. Any export requiring approval is therefore subject to authorization by the relevant authorities.

Errors excepted and subject to change without prior notice.

[1] The text of the Terms and Conditions of Siemens AG can be downloaded at www.siemens.com/automation/salesmaterial-as/catalog/en/terms_of_trade_en.pdf

© Siemens AG 2017

Catalogs

Digital Factory, Process Industries and Drives and Energy Management

Further information can be obtained from our branch offices listed at www.siemens.com/automation-contact

Interactive Catalog on DVD	*Catalog*
Products for Automation and Drives	**CA 01**

Building Control	
GAMMA Building Control	ET G1

Drive Systems	
SINAMICS G130 Drive Converter Chassis Units SINAMICS G150 Drive Converter Cabinet Units	D 11
SINAMICS GM150, SINAMICS SM150 Medium-Voltage Converters	D 12
SINAMICS PERFECT HARMONY GH180 Medium-Voltage Air-Cooled Drives (Germany Edition)	D 15.1
SINAMICS G180 Converters – Compact Units, Cabinet Systems, Cabinet Units Air-Cooled and Liquid-Cooled	D 18.1
SINAMICS S120 Chassis Format Units and Cabinet Modules SINAMICS S150 Converter Cabinet Units	D 21.3
SINAMICS S120 and SIMOTICS	D 21.4
SINAMICS DCM DC Converter, Control Module	D 23.1
SINAMICS DCM Cabinet	D 23.2
SINAMICS Inverters for Single-Axis Drives and SIMOTICS Motors	D 31
Digital: SINAMICS G120P and SINAMICS G120P Cabinet pump, fan, compressor converters	*D 35*
LOHER VARIO High Voltage Motors Flameproof, Type Series 1PS4, 1PS5, 1MV4 and 1MV5 Frame Size 355 to 1000, Power Range 80 to 7100 kW	D 83.2
Three-Phase Induction Motors SIMOTICS HV, SIMOTICS TN • Series H-compact • Series H-compact PLUS	D 84.1
High Voltage Three-phase Induction Motors SIMOTICS HV Series A-compact PLUS	D 84.9
Three-Phase Induction Motors SIMOTICS HV, Series H-compact	D 86.1
Synchronous Motors with Permanent-Magnet Technology, HT-direct	D 86.2
DC Motors	DA 12
SIMOREG DC MASTER 6RA70 Digital Chassis Converters	DA 21.1
SIMOREG K 6RA22 Analog Chassis Converters	DA 21.2
Digital: SIMOREG DC MASTER 6RM70 Digital Converter Cabinet Units	*DA 22*
SIMOVERT PM Modular Converter Systems	DA 45
SIEMOSYN Motors	DA 48
MICROMASTER 420/430/440 Inverters	DA 51.2
MICROMASTER 411/COMBIMASTER 411	DA 51.3
Low-Voltage Three-Phase-Motors	
SIMOTOCS S-1FG1 Servo geared motors	D 41
SIMOTICS Low-Voltage Motors	D 81.1
SIMOTICS FD Low-Voltage Motors	D 81.8
LOHER Low-Voltage Motors	D 83.1
MOTOX Geared Motors	D 87.1
SIMOGEAR Geared Motors	MD 50.1
SIMOGEAR Gearboxes with adapter	MD 50.11
Mechanical Driving Machines	
FLENDER Standard Couplings	MD 10.1
FLENDER High Performance Couplings	MD 10.2
FLENDER Backlash-free Couplings	MD 10.3
FLENDER SIP Standard industrial planetary gear units	MD 31.1

Process Instrumentation and Analytics	
Digital: Field Instruments for Process Automation	*FI 01*
Digital: Display Recorders SIREC D	*MP 20*
Digital: SIPART Controllers and Software	*MP 31*
Products for Weighing Technology	WT 10
Process Analytical Instruments	AP 01
Digital: Process Analytics, Components for Continuous Emission Monitoring	*AP 11*

Low-Voltage Power Distribution and Electrical Installation Technology	*Catalog*
SENTRON · SIVACON · ALPHA Protection, Switching, Measuring and Monitoring Devices, Switchboards and Distribution Systems	LV 10
Standards-Compliant Components for Photovoltaic Plants	LV 11
Electrical Components for the Railway Industry	LV 12
TÜV-certified Power Monitoring System	LV 14
Components for Industrial Control Panels according to UL Standards	LV 16
3WT Air Circuit Breakers up to 4000 A	LV 35
3VT Molded Case Circuit Breakers up to 1600 A	LV 36
Digital: SIVACON System Cubicles, System Lighting and System Air-Conditioning	*LV 50*
Digital: ALPHA Distribution Systems	*LV 51*
ALPHA FIX Terminal Blocks	LV 52
SIVACON S4 Power Distribution Boards	LV 56
SIVACON 8PS Busbar Trunking Systems	LV 70
Digital: DELTA Switches and Socket Outlets	*ET D1*

Motion Control	
SINUMERIK 840 Equipment for Machine Tools	NC 62
SINUMERIK 808 Equipment for Machine Tools	NC 81.1
SINUMERIK 828 Equipment for Machine Tools	NC 82
SIMOTION Equipment for Production Machines	PM 21
Digital: Drive and Control Components for Cranes	*CR 1*

Power Supply	
SITOP Power supply	KT 10.1

Safety Integrated	
Safety Technology for Factory Automation	SI 10

SIMATIC HMI / PC-based Automation	
Human Machine Interface Systems/ PC-based Automation	ST 80/ ST PC

SIMATIC Ident	
Industrial Identification Systems	ID 10

SIMATIC Industrial Automation Systems	
Products for Totally Integrated Automation	ST 70
SIMATIC PCS 7 Process Control System System components	ST PCS 7
SIMATIC PCS 7 Process Control System Technology components	ST PCS 7 T
Add-ons for the SIMATIC PCS 7 Process Control System	ST PCS 7 AO

SIMATIC NET	
Industrial Communication	IK PI

SIRIUS Industrial Controls	
Digital: SIRIUS Industrial Controls	*IC 10*

Digital: These catalogs are only available as a PDF.

Information and Download Center

Digital versions of the catalogs are available on the Internet at:
www.siemens.com/industry/infocenter
There you'll find additional catalogs in other languages.

Please note the section "Downloading catalogs" on page "Online services" in the appendix of this catalog.

© Siemens AG 2017

Get more information

The drives family SINAMICS:
www.siemens.com/sinamics

Integrated Drive Systems:
www.siemens.com/ids

Motion Control Systems and Motion Control Solutions for production machine and machine tool equipment:
www.siemens.com/motioncontrol

Local partners worldwide:
www.siemens.com/automation-contact

Siemens AG
Digital Factory Division
Motion Control
Postfach 31 80
91050 ERLANGEN
GERMANY

© Siemens AG 2017
Subject to change without prior notice
Article No. E86060-K5521-A141-A1-7600
V6.MKKATA.GMC.131 / Dispo 18404
KG 0217 7. HOF/KÖR 848 En
Printed in Germany

The information provided in this catalog contains merely general descriptions or characteristics of performance which in case of actual use do not always apply as described or which may change as a result of further development of the products. An obligation to provide the respective characteristics shall only exist if expressly agreed in the terms of contract. Availability and technical specifications are subject to change without notice.

All product designations may be trademarks or product names of Siemens AG or supplier companies whose use by third parties for their own purposes could violate the rights of the owners.

Token fee: 10.00 €

Security information

Siemens provides products and solutions with industrial security functions that support the secure operation of plants, systems, machines and networks.

In order to protect plants, systems, machines and networks against cyber threats, it is necessary to implement – and continuously maintain – a holistic, state-of-the-art industrial security concept. Siemens' products and solutions only form one element of such a concept.

Customer is responsible to prevent unauthorized access to its plants, systems, machines and networks. Systems, machines and components should only be connected to the enterprise network or the internet if and to the extent necessary and with appropriate security measures (e.g. use of firewalls and network segmentation) in place.

Additionally, Siemens' guidance on appropriate security measures should be taken into account. For more information about industrial security, please visit
www.siemens.com/industrialsecurity

Siemens' products and solutions undergo continuous development to make them more secure. Siemens strongly recommends to apply product updates as soon as available and to always use the latest product versions. Use of product versions that are no longer supported, and failure to apply latest updates may increase customer's exposure to cyber threats.

To stay informed about product updates, subscribe to the Siemens Industrial Security RSS Feed under
www.siemens.com/industrialsecurity

Discover the advantages of Integrated Drive Systems at a glance