SIEMENS

Edition 06/2023

SYSTEM MANUAL

Industrial Controls

SIRIUS Classic

siemens.com

Промэлектроника, sales@prom-elec.com

Safety guidelines

This manual contains notices which you should observe to ensure your own personal safety, as well as to protect the product and connected equipment. These notices are highlighted in the manual by a warning triangle and are marked as follows according to the level of danger:

Safety note

Contains important information for the acceptance test and the safety-related use of the product.

Danger

Indicates that death, severe personal injury or substantial property damage **will** result if proper precautions are not taken.

Warning

Indicates that death, severe personal injury or substantial property damage **can** result if proper precautions are not taken.

Warning

Indicates that minor personal injury or property damage can result if proper precautions are not taken.

Caution

indicates that property damage can result if proper precautions are not taken.

Important

Draws your attention to particularly important information on the product, handling the product, or to a particular part of the documentation.

Qualified personnel

Only **qualified personnel** should be allowed to install and work on this equipment. Qualified persons are defined as persons who are authorized to commission, to ground, and to tag circuits, equipment, and systems in accordance with established safety practices and standards.

Correct usage

Note the following:

Warning

This device and its components may only be used for the applications described in the catalogue or the technical descriptions, and only in connection with devices or components from other manufacturers which have been approved or recommended by SIEMENS.

This product can only function correctly and safely if it is transported, stored, set up, and installed correctly, and operated and maintained as recommended.

Brands

SIMATIC®, SIMATIC HMI® and SIMATIC NET® are brands of SIEMENS AG.
Some other designations used in these documents are also brands; the owner's rights may be violated if they are used by third parties for their own purposes.

Copyright SIEMENS AG 2001 All rights reserved

The reproduction, transmission or use of this document or its contents is not permitted without express written authority. Offenders will be liable for damages. All rights, including rights created by patent grant or registration of a utility model or design, are reserved.

Disclaimer of liability

We have checked this manual to ensure that its contents are correct and applicable in relation to the hardware and software it describes. Despite all our endeavors, however, discrepancies cannot be wholly excluded and so we cannot guarantee complete correctness and applicability. However, the data in this manual are reviewed regularly and any necessary corrections included in subsequent editions. Suggestions for improvement are welcomed.

SIEMENS AG

Online Support siemens.com/online-support

Support Request siemens.com/support-request

www.siemens.com/sirius/support

Siemens AG
Smart Infrastructure
Electrical Products
Postfach 10 09 53
93009 Regensburg
GERMANY

A5E40534713002A/RS-AB/002
Ⓟ 06/2023 Subject to changes

Copyright © Siemens AG 2001
All rights reserved

Contents

1 System overview . . . 1-1

1.1 Specifications/regulations/approvals . . . 1-3
1.2 Product range . . . 1-5
1.3 System features . . . 1-10
1.3.1 Environmental requirements . . . 1-11
1.3.2 Environmental protection . . . 1-11
1.4 Components and combinations . . . 1-12
1.5 Mounting methods and terminal systems . . . 1-16
1.5.1 Mounting the equipment . . . 1-16
1.5.2 Screw-type terminals . . . 1-18
1.5.3 Cage Clamp terminals . . . 1-19
1.5.4 Connection cross-sections . . . 1-21
1.6 Communication . . . 1-22
1.6.1 Communication-capable low-voltage switching technology . . . 1-22
1.6.2 Parameterization of PROFIBUS-DP and bus-capable low-voltage switching devices . . . 1-23
1.6.3 Actuator-sensor interface (AS-Interface) . . . 1-24
1.6.4 SIRIUS NET Communication-capable motor starter . . . 1-29

2 3RV1 Circuit breaker/MSP 1) . . . 2-1

2.1 Specifications/regulations/approvals . . . 2-3
2.2 Device description . . . 2-5
2.2.1 General description . . . 2-6
2.2.2 Operation . . . 2-7
2.2.3 Information on configuration . . . 2-10
2.3 Application and areas of use . . . 2-13
2.3.1 Motor protection . . . 2-13
2.3.2 Transformer protection . . . 2-13
2.3.3 Starter protection . . . 2-13
2.3.4 Motor protection with overload relay function . . . 2-14
2.3.5 Switching direct current . . . 2-15
2.3.6 Main and emergency stop switches . . . 2-15
2.4 Accessories . . . 2-16
2.4.1 Attachable accessories: Overview . . . 2-16
2.4.2 Auxiliary contacts 3RV19 01-.., alarm switch 3RV19 21-111 and auxiliary release 3RV19 .2-.... . . . 2-17
2.4.3 Motorized remote-control mechanism 3RV19 .6-.... . . . 2-24
2.4.4 Disconnecting/isolator module 3RV19 .8-1A . . . 2-27
2.4.5 Thru-the door rotary operators 3RV19 .6-.. . . . 2-29
2.4.6 Terminals for "Combination Motor Controller Type E" in acc. with UL 508 . . . 2-35
2.4.7 Enclosures and mounting accessories . . . 2-36
2.4.8 Busbar adapter 8US1 (Fastbus system) . . . 2-41
2.4.9 Isolated 3-phase busbar system . . . 2-45
2.4.10 Link module for connection to a contactor . . . 2-48
2.5 Mounting and connection . . . 2-49
2.5.1 Installation . . . 2-49
2.5.2 Connection . . . 2-48
2.5.3 Device circuit diagrams . . . 2-50
2.6 Dimensional drawings (dimensions in mm) . . . 2-52
2.7 Technical specifications . . . 2-63
2.7.1 General specifications . . . 2-63

2.7.2 Permissible rating of approved devices for North America, u s . . . 2-66
2.7.3 Short-circuit breaking capacity Icn in acc. with IEC 60 947-2 . . . 2-68
2.7.4 Limiter function with standard devices for 500 V AC and 690 V AC in acc. with IEC 60 947-2 . . . 2-70
2.7.5 Characteristics . . . 2-70
2.7.6 Installation guidelines . . . 2-71
2.8 Application notes for the use of 3RV1 downstream from frequency converters/inverter with pulsing voltage . . . 2-72
2.8.1 Influences of high frequency currents upon the thermal overload release . . . 2-72
2.8.2 Other possible influences . . . 2-73

3 3RT1 Contactors/ 3RH1 Control relays . . . 3-1

3.1 Specifications/regulations/approvals . . . 3-3
3.1.1 Utilization categories . . . 3-3
3.1.2 Positively driven operation . . . 3-7
3.1.3 Safe isolation . . . 3-7
3.1.4 Explanation of terms . . . 3-9
3.2 Device description . . . 3-10
3.2.1 Coil systems S00 to S3 . . . 3-12
3.2.2 Short-circuit protection for SIRIUS contactors . . . 3-13
3.2.3 Operation . . . 3-14
3.2.3.1 General information . . . 3-14
3.2.3.2 Contact reliability . . . 3-15
3.2.3.3 Electrical service life . . . 3-16
3.2.3.4 Ambient temperature . . . 3-20
3.3 Application and areas of use . . . 3-23
3.3.1 3RT10 contactors with 3 main contacts for switching motors . . . 3-23
3.3.2 3RT14 contactors with 3 main contacts for switching resistive loads (AC-1) . . . 3-24
3.3.3 3RT13 and 3RT15 contactors with 4 main contacts . . . 3-25
3.3.4 3RT16 capacitor contactors . . . 3-26
3.3.5 Contactors with an extended operating range . . . 3-28
3.3.5.1 Contactors with series resister (3RH11...-0LA0/3RT10...-0LA0) . . . 3-28
3.3.5.2 Contactors with electronic control module frame sizes S0 to S3 (3RT10..-.X40-0LA2) . . . 3-30
3.3.5.3 Contactors with an extended operating range (3RH1122-2K.40, 3RT1017-2K.4., 3RT102.-3K.40) . . . 3-31
3.3.6 3RH1 control relays . . . 3-32
3.3.7 3RT10 contactor relays for switching motors (interface) and 3RH11 control relays for switching auxiliary circuits . . . 3-33
3.3.8 3RA13 Contactor combinations for reversing . . . 3-35
3.3.9 3RA14 Wye-delta combinations . . . 3-46
3.4 Accessories . . . 3-54
3.4.1 Attachable auxiliary switches for extending the auxiliary contacts . . . 3-57
3.4.1.1 Terminal markings of the contactors frame sizes S00 to S3 . . . 3-62
3.4.1.2 Terminal markings of the contactors and control relays combined with auxiliary switch blocks 3-64
3.4.1.3 Auxiliary switches that can be attached to 3RH1 control relays . . . 3-66
3.4.2 Time-delay auxiliary switches . . . 3-69
3.4.2.1 Frame size S00 (3RT1916-2E, -2F, -2G) . . . 3-69
3.4.2.2 Frame sizes S0 to S3 (3RT1926-2E, -2F, -2G) . . . 3-71
3.4.3 Solid-state time relay blocks with semiconductor output . . . 3-72
3.4.3.1 Frame size S00 (3RT1916-2C, -2D) . . . 3-73
3.4.3.2 Frame sizes S0 to S3 (3RT19 26-2C, -2D) . . . 3-74
3.4.4 Additional load module (3RT1916-1GA00) . . . 3-75
3.4.5 Coupling element for frame sizes S0 to S3 (3RH1924-1GP11) . . . 3-76

3.4.6 Surge suppression . . . 3-78
3.4.7 Other accessories . . . 3-83
3.4.7.1 LED module for indicating contactor control (3RT19 26-1QT00) . . . 3-83
3.4.7.2 Auxiliary connecting lead terminal, 3-pole for frame size S3 (3RT19 46-4F) . . . 3-83
3.4.7.3 EMC interference suppression module (3RT19 16-1P..) . . . 3-84
3.4.7.4 Soldering pin adapter for frame size S00 (3RT19 16-4KA.) . . . 3-85
3.4.7.5 Paralleling links (3RT19 .6-4B.31) . . . 3-87
3.4.7.6 Sealing cover (3RT19 .6-4MA10) . . . 3-88
3.4.7.7 Terminal covers for frame sizes S2 to S3 . . . 3-89
3.5 Mounting and connection . . . 3-91
3.5.1 Mounting . . . 3-91
3.5.2 Connection . . . 3-94
3.5.3 Changing the magnetic coils . . . 3-98
3.5.4 Changing the contact pieces . . . 3-103
3.6 Dimensional drawings (dimensions in mm) . . . 3-106
3.7 Technical data . . . 3-122

4 3RU11, 3RB10, 3RB12 Overload relays . . . 4-1

4.1 Specifications/regulations/approvals . . . 4-2
4.2 Device description . . . 4-4
4.2.1 Overview . . . 4-4
4.2.2 Detailed device description . . . 4-5
4.3 Application and use . . . 4-10
4.3.1 Overload relay in the motor circuit . . . 4-10
4.3.2 3RU11 thermal overload relays and 3RB10 electronic overload relays . . . 4-15
4.3.3 3RB12 electronic overload relays . . . 4-22
4.4 Accessories . . . 4-30
4.4.1 Electrical remote RESET . . . 4-30
4.4.2 Mechanical thru-the-door reset . . . 4-31
4.4.3 Other accessories . . . 4-33
4.5 Mounting and connection . . . 4-34
4.5.1 Mounting . . . 4-34
4.5.1.1 3RU11 thermal overload relays and 3RB10 electronic overload relays . . . 4-34
4.5.1.2 3RB12 electronic overload relays . . . 4-40
4.5.2 Connection . . . 4-41
4.5.3 Circuit diagrams . . . 4-43
4.6 Dimensional drawings (dimensions in mm) . . . 4-46
4.7 Technical Data . . . 4-49
4.7.1 3RU11 thermal overload relays . . . 4-49
4.7.2 3RB10 electronic overload relays . . . 4-54
4.7.3 3RB12 electronic overload relays . . . 4-61
4.7.4 Terminal bracket for stand-alone installation . . . 4-66

5 3RA1 Fuseless load feeders/Combination starters . . . 5-1

5.1 Specifications/regulations/approvals . . . 5-2
5.2 Device descriptions . . . 5-3
5.2.1 Mounting systems . . . 5-4
5.2.2 Mounting kits for self-assembly . . . 5-5
5.2.3 Complete devices . . . 5-5
5.3 Application and areas of use . . . 5-7
5.4 Accessories . . . 5-8
5.4.1 Accessories for the individual devices . . . 5-8

5.4.2 Accessories specifically for the SIRIUS 3RA fuseless load feeder . . . 5-8
5.4.3 Instructions for self-assembly . . . 5-9
5.5 Mounting and connection . . . 5-18
5.5.1 Mounting . . . 5-18
5.5.2 Connection . . . 5-21
5.5.3 Circuit diagrams . . . 5-23
5.6 Dimensional drawings (dimensions in mm) . . . 5-24
5.7 Technical specifications . . . 5-28

6 3RH, 3TX, LZX Coupling links . . . 6-1

6.1 Specifications/regulations . . . 6-2
6.2 Device description . . . 6-3
6.2.1 Relay coupling modules versus semiconductor coupling modules . . . 6-4
6.2.2 Coupling links in two-tier and box terminal format . . . 6-5
6.2.3 Plug-in relay coupling links . . . 6-6
6.2.4 Coupling links for direct attachment . . . 6-7
6.2.5 SIRIUS contactor relays . . . 6-7
6.2.6 Installation . . . 6-7
6.2.7 Notes on configuration . . . 6-8
6.2.8 Explanation of terms . . . 6-9
6.3 Application and areas of use . . . 6-10
6.3.1 General information . . . 6-10
6.3.2 Criteria for selection . . . 6-11
6.4 Accessories . . . 6-12
6.4.1 Accessories for two-tier coupling links . . . 6-12
6.4.2 Accessories for LZX plug-in relay coupling links . . . 6-13
6.5 Mounting and connection . . . 6-14
6.5.1 Mounting . . . 6-14
6.5.2 Connection . . . 6-14
6.5.3 Device circuit diagrams . . . 6-16
6.6 Dimensional drawings (dimensions in mm) . . . 6-20
6.7 Technical specifications . . . 6-22

7 3RP20, 3RP15 Solid-state time relays . . . 7-1

7.1 Specifications/regulations/approvals . . . 7-2
7.2 Device description . . . 7-3
7.2.1 Device types . . . 7-3
7.2.2 Installation . . . 7-5
7.2.3 Special features . . . 7-5
7.2.4 Notes on configuration . . . 7-6
7.2.5 Explanation of terms . . . 7-7
7.3 Application and areas of use . . . 7-8
7.3.1 Multifunction (3RP20 05 solid-state time relay) . . . 7-8
7.3.2 Multifunctional (3RP15 05 solid-state time relay) . . . 7-12
7.3.3 On-delay . . . 7-18
7.3.4 Off-delay . . . 7-19
7.3.5 Clock pulse generator (3RP15 55 solid-state time relay) . . . 7-20
7.3.6 Wye-delta function (3RP15 74/76 solid-state time relay) . . . 7-21
7.3.7 Wye-delta function with overtravel (3RP15 60 solid-state time relay) . . . 7-21
7.4 Accessories . . . 7-22
7.4.1 Accessories for 3RP15 05, 3RP20 05 . . . 7-22
7.5 Mounting and connection . . . 7-24

7.5.1 Mounting . . . 7-24
7.5.2 Connection . . . 7-25
7.5.3 Circuit diagrams . . . 7-26
7.6 Dimensional drawings (dimensions in mm) . . . 7-27
7.7 Technical Data . . . 7-28

8 3RW3 Semiconductor motor control unit . . . 8-1

8.1 Specifications/regulations/approvals . . . 8-3
8.2 Device description . . . 8-5
8.2.1 Physical principles . . . 8-6
8.2.2 General device description . . . 8-10
8.2.3 Comparison of the 3RW3 semiconductor motor control unit (soft starter) with the SIKOSTART 3RW22 and SIKOSTART 3RW34 motor control units . . . 8-14
8.2.4 Comparison of the 3RW3 semiconductor motor control unit (soft starter) with the 3RA star-delta combination . . . 8-16
8.2.5 Notes on configuration . . . 8-16
8.3 Application and use . . . 8-18
8.3.1 Areas of application and criteria for selection . . . 8-18
8.3.2 Installation guidelines . . . 8-18
8.3.3 Overview tables: correction factors . . . 8-21
8.3.3.1 3RW30/31 soft starters in a stand-alone installation . . . 8-21
8.3.3.2 3RW30/31 soft starters in combination with the 3RV1 circuit breaker . . . 8-22
8.3.3.3 Combining the 3RT contactor with the 3RU1 thermal overload relay and 3RW3 soft starter 8-24
8.3.3.4 Combining the 3RT contactor with the 3RB10 electronic overload relay and 3RW3 soft starter 8-26
8.3.4 Circuit example . . . 8-29
8.3.5 Commissioning . . . 8-30
8.3.6 Event messages and diagnostics . . . 8-32
8.3.7 Timing diagram . . . 8-33
8.4 Accessories . . . 8-35
8.5 Mounting and connection . . . 8-37
8.5.1 Mounting . . . 8-37
8.5.2 Connection . . . 8-37
8.5.3 Circuit diagrams . . . 8-38
8.6 Dimensional drawings (dimensions in mm) . . . 8-41
8.7 Technical specifications . . . 8-42
8.7.1 Control electronics/power electronics . . . 8-42
8.7.2 Short-circuit protection and fuse coordination . . . 8-45
8.7.3 Site altitude . . . 8-50
8.7.4 Specifications in acc. with IEC . . . 8-51
8.7.5 Specifications in acc. with NEMA . . . 8-52

9 3RE Enclosed starter 9-1

9.1 Specifications/regulations/approvals 9-2
9.2 Device description 9-3
9.3 Application and areas of use 9-5
9.3.1 The enclosed starter in motor branches 9-5
9.3.2 Planning and operation 9-5
9.4 Accessories 9-6
9.5 Mounting and connection 9-7
9.5.1 Mounting 9-7
9.5.2 Connection 9-7
9.5.3 Circuit diagrams 9-8
9.6 Dimensional drawings 9-9
9.7 Technical Data 9-10

Index Index-1

1

System overview

Section	Subject	Page
1.1	**Specifications/regulations/approvals**	**1-3**
1.2	**Product range**	**1-5**
1.3	System features	**1-10**
1.3.1	Environmental requirements	1-11
1.3.2	Environmental protection	1-11
1.4	**Components and combinations**	**1-12**
1.5	**Mounting methods and terminal systems**	**1-16**
1.5.1	Mounting the equipment	1-16
1.5.2	Screw-type terminals	1-18
1.5.3	Cage Clamp terminals	1-19
1.5.4	Connection cross-sections	1-21
1.6	**Communication**	**1-22**
1.6.1	Communication-capable low-voltage switching technology	1-22
1.6.2	Parameterization of PROFIBUS-DP and bus-capable low-voltage switching devices	1-23
1.6.3	Actuator-sensor interface (AS-Interface)	1-24
1.6.4	SIRIUS NET Communication-capable motor starter	1-29

Introduction

SIEMENS is one of the leading manufacturers of control products. The product range extends from devices that switch a few mA to circuit breakers used in power distribution.

Throughout the continuing development of these products we have always striven to ensure that requirements in terms of fundamental performance features, electrical and mechanical service life, dimensions, and ease of installation and maintenance are met or exceeded.

We have been able to meet the demands resulting from increased environmental awareness, particularly in the last ten years or so, by developing and using environment-friendly and recyclable materials. As a result, we have developed modern industrial switching devices, particularly in the field of low-voltage switchgear, that meet all the relevant demands in terms of environment-friendliness.

Building on decades of experience, we have created a completely new generation of circuit breakers, contactors, auxiliary contactors, overload relays, contactor relays, time relays, and 3RW3 semiconductor motor control devices (referred to below as soft starters) under the name SIRIUS for the large and continuously growing number of motor drives in the range up to 250 kW (400 HP).

These new SIRIUS devices fulfill all the demands placed on them in practice and can be used as stand-alone devices or modular components of complete load feeders, or integrated in low-voltage distribution cabinets or low-voltage switching stations.

1.1 Specifications/regulations/approvals

ALPHA/LOVAG

The Low Voltage Controls and Distribution Division of Siemens AG is a member of "Gesellschaft zur Prüfung und Zertifizierung von Niederspannungsgeräten e.V. ALPHA" (Society for Testing and Certification of Low-Voltage Equipment), Frankfurt am Main.

The responsibility of manufacturers and the high quality of products are promoted by ALPHA by means of supportive procedural guidelines for testing equipment in accordance with the currently valid standards. Providing specific conditions are fulfilled, ALPHA can also issue officially recognized product certificates if required. As a member of LOVAG, ALPHA is also working towards obtaining international recognition for declarations of conformity and certificates.

In LOVAG (Low Voltage Agreement Group), international specialists from certification bodies and industry are working together to create a standardized European certificate.

List of LOVAG members

ALPHA	Germany
ASEFA	France
ACAE	Italy
CEBEC	Belgium
CESI	Italy
KEMA	Netherlands
SEMKO	Sweden

Explosion protection

Motor protection devices that protect a motor installed in a potentially explosive atmosphere against overloading must comply with certain special requirements. These requirements are laid down in the following standards:

- EN 60947-1
- EN 60079-14
- EN 60947-4-1
- EN 50014
- EN 50019.

Certification

On July 1, 2003 a new era began in the area of explosion protection. Since this date, within the European Union, only those devices and protection systems that have been certified for use in potentially explosive atmospheres in accordance with directive 94/9/EU can be brought into circulation.

Only those motor protection devices that have been constructed in accordance with the above-mentioned standards and which have a conformity declaration from the manufacturer based on a prototype test certificate are permitted to be brought into circulation within the member states of the EU.

The quality management system of the manufacturer is also subjected to certain requirements and a "QM certificate" must be obtained for the manufacturer from a recognized authority.

Certification of the QM system

A certificate of approval for quality assurance production has been issued by DMT [1]) with the DMT [1]) number 02 ATEX ZQS/EM, in accordance with directive 94/9/EU.

This certificate is valid for equipment groups I and II and categories M2 and 2: Safety and control devices for electrical equipment.

Certificates

For the 3RV, 3RU, 3RB, 3UF5 and 3RN motor protection devices, the corresponding conformity declarations and prototype test certificates for Category 2G and partly 2D are available and can be supplied on request.

Identifying markings

All equipment must be marked in accordance with the ATEX guideline. The ATEX identification code contains the equipment group, the approved environment, the number of the certification authority and other technical data that was determined from the type test.

UL/CSA

Underwriter's Laboratories (UL) and the Canadian Standards Association (CSA) are authorized to grant approvals acording to US or Canadian regulations and standards. These standards typically apply to the control product as a componient and not the installation or the use of the product. It is the responsibility of the end user of the control product to make sure each installation complies with all of the applicable safety requirements, laws, regulations, codes and standards (examples: N.E.C., the C.E.C. and OSHA regulations.

[1]) DMT
The certification authority of the Deutschen Montan Technologie GmbH, numbered as authority number 0158 in accordance with Article 9 of Directive 94/9/EU of the European Parliament dated March 23, 1994, certifies that Siemens Amberg and Cham maintains a quality system for production that satisfies Appendix IV of this directive.

1.2 Product range

SIRIUS system

The SIRIUS product range consists of 3RV circuit breakers/Motor Starter Protectors, 3RT contactors, 3RH/3RT control relays and auxiliary contacts, 3RU thermal overload relays, 3RB10/3RB12 electronic overload relays, 3RP time relays, 3RW3 semiconductor motor control devices (referred to below as soft starters), and combinations of these devices, which form the 3RA load feeders (combination starters).

The individual devices are developed and built in such a way that it is very easy to put them together to make load feeders. This is possible because the devices are all built to work together on both an electrical and a mechanical level.

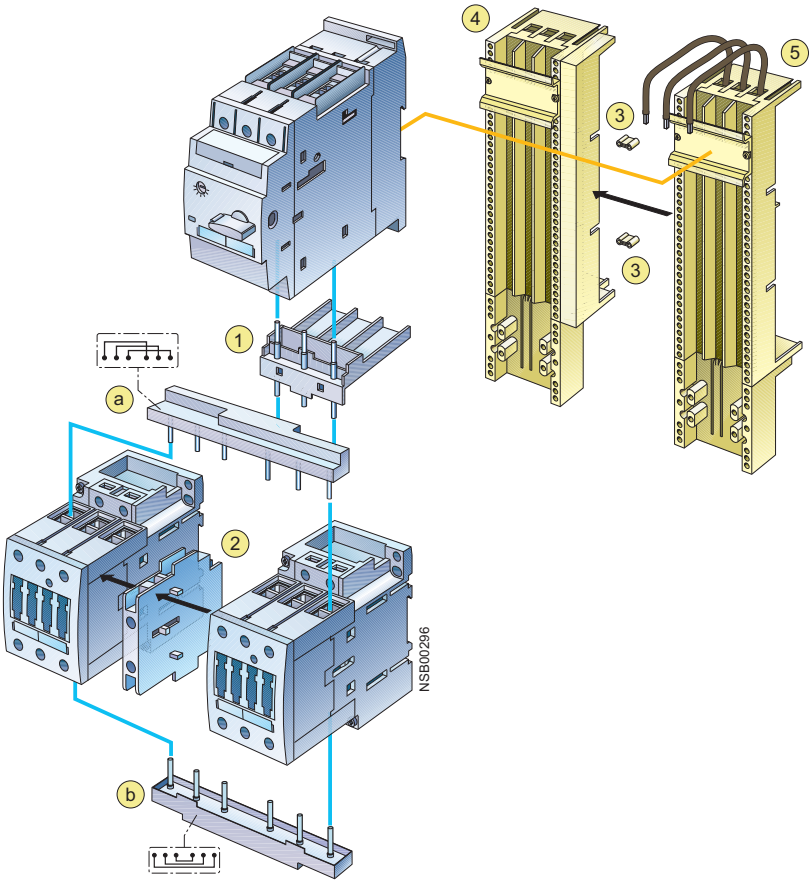

Fig. 1-1: SIRIUS System

Circuit breaker (MSP) with a frame size of S00 and attachable accessories:

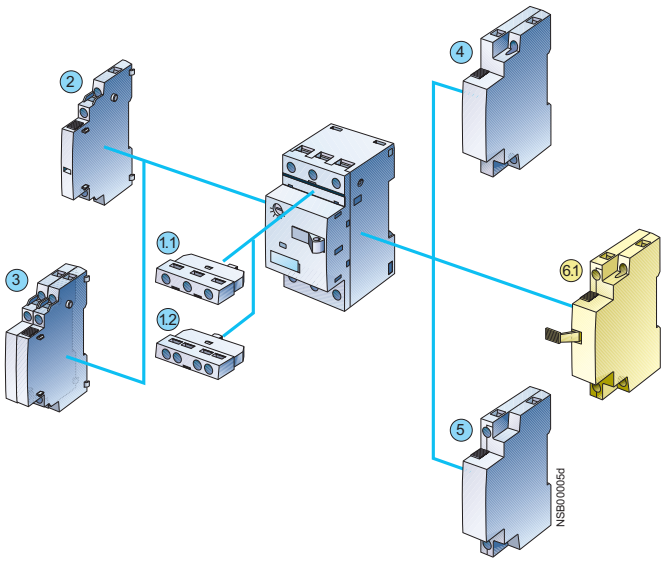

Fig. 1-2: Circuit breaker (MSP), accessories (frame size S00)

Circuit breakers (MSPs) with frame sizes of S0, S2, and S3 and attachable accessories:

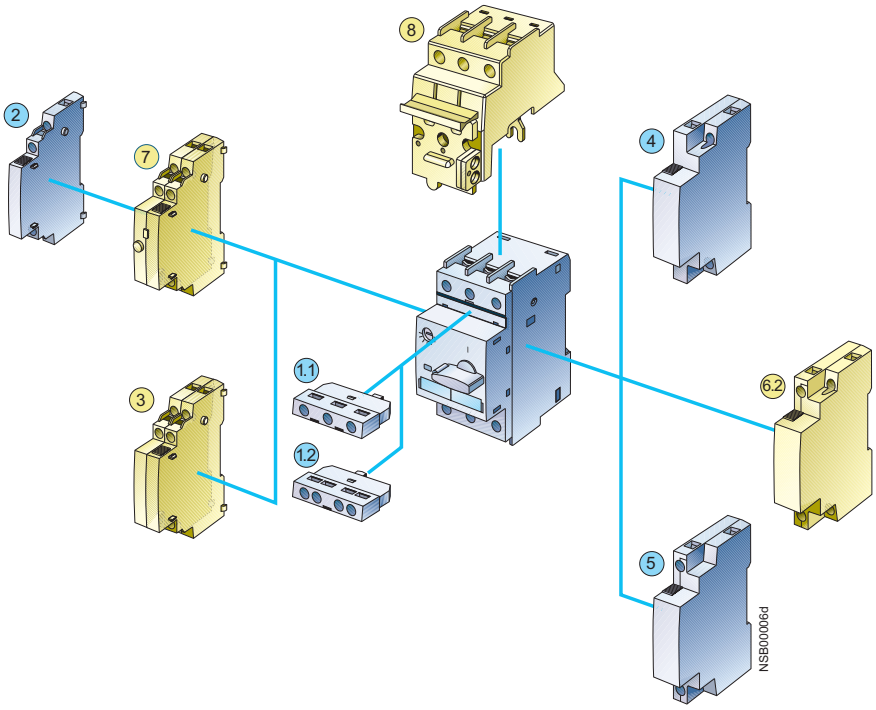

Fig. 1-3: Circuit breakers (MSPs), accessories (frame sizes S0, S2, and S3)

Attachable accessories for frame sizes S00, S0, S2, and S3:

1.1) Transverse auxiliary switch with 1 changeover contact
1.2) Transverse auxiliary switch with 1 NO + 1 NC or 2 NO contacts
2) Lateral auxiliary switch with 2 contacts
3) Lateral auxiliary switch with 4 contacts
4) Shunt release
5) Undervoltage release
6.1) Undervoltage release with leading auxiliary contacts (S00)
6.2) Undervoltage release with leading auxiliary contacts (S0 to S3)
7) Alarm switch (S0 to S3)
8) Disconnecting module (S0 and S2)

Contactors with a frame size of S00 and accessories:

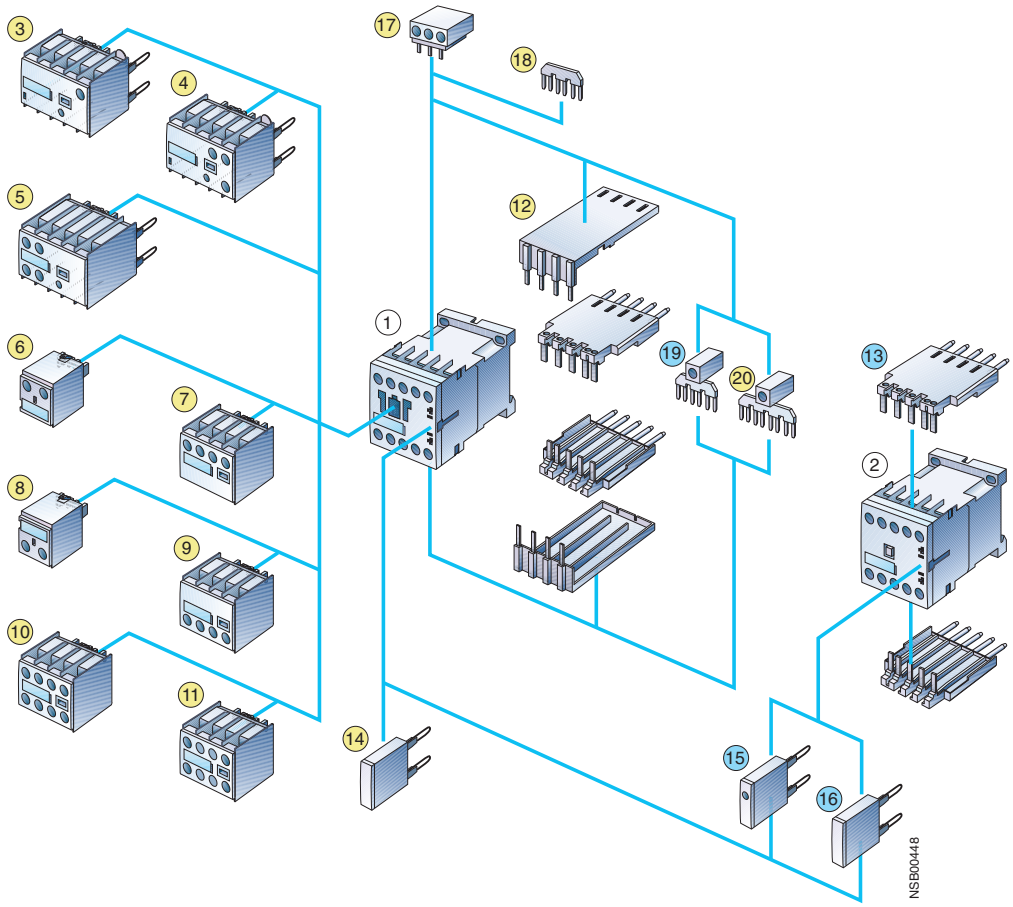

Fig. 1-4: Contactors, accessories (frame size S00)

1) Contactor
2) Control relay
3) Solid-state time relay block, on-delay
4) Solid-state time relay block, off-delay
5) Auxiliary switch block, time-delay
   (on-delay or off-delay or wye-delta function)
6) 1-pole auxiliary switch block, infeed from above
7) 2-pole auxiliary switch block, infeed from above
8) 1-pole auxiliary switch block, infeed from below
9) 2-pole auxiliary switch block, infeed from below
10) 4-pole auxiliary switch block
    (terminal markings in acc. with DIN EN 50 012 or DIN EN 50 005)
11) 2-pole auxiliary switch block, standard or electronic
    type (terminal markings in acc. with DIN EN 50 005)
12) Soldering pin adapter for contactors with 4-pole auxiliary switch block
13) Soldering pin adapter for contactors and contactor relays
14) Additional load module to increase the permissible residual current
15) Surge suppressor with LED
16) Surge suppressor without LED
17) 3-phase feed-in terminal
18) Parallel link (neutral bridge), 3-pole, without terminal
19) Parallel link, 3-pole, with terminal
20) Parallel link, 4-pole, with terminal

Contactors with frame sizes of S0 to S3 with accessories:

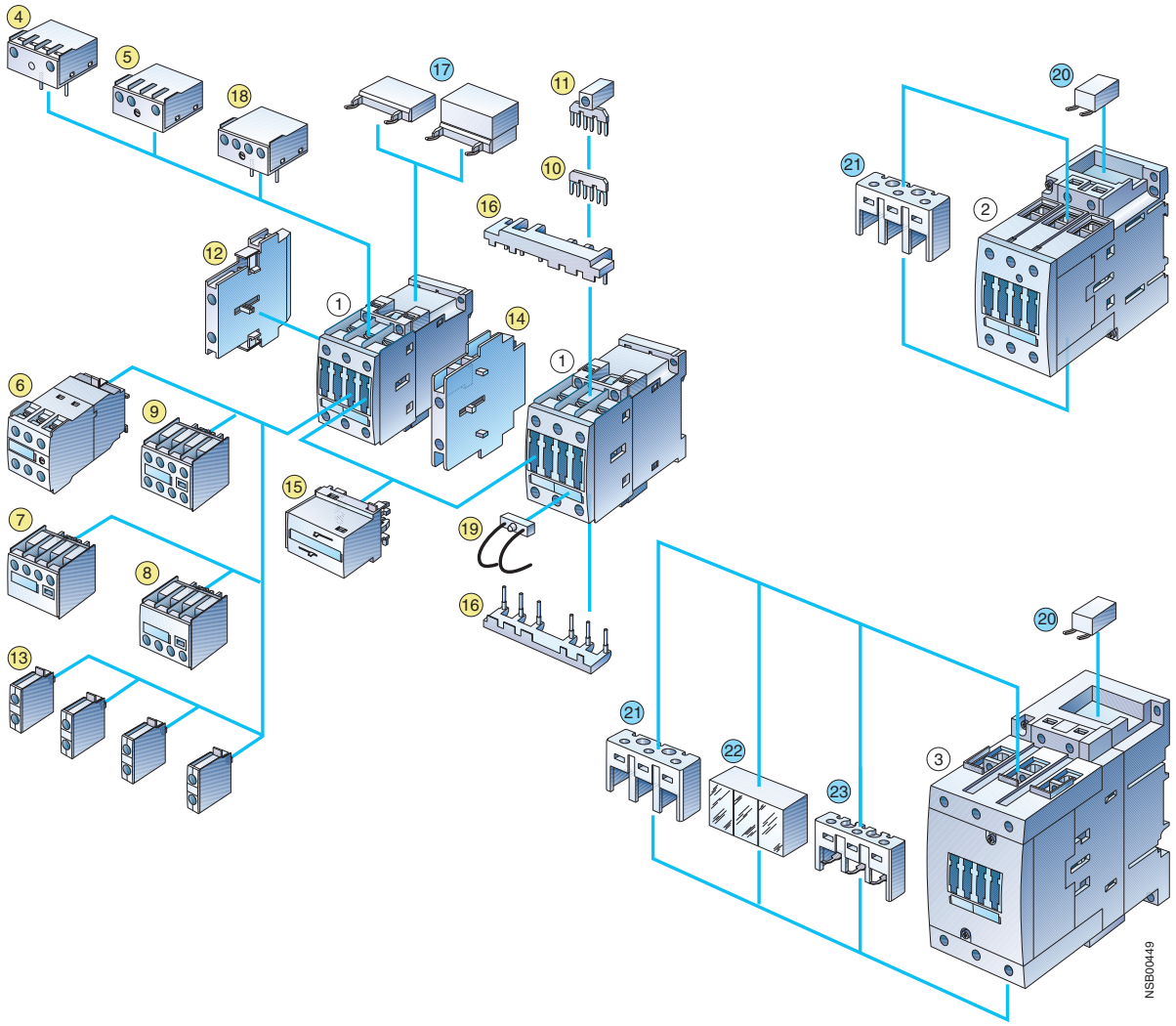

Fig. 1-5: Contactors, accessories (frame sizes S0 toS3)

1) Contactor, frame size S0
2) Contactor, frame size S2
3) Contactor, frame size S3

For frame sizes S0 to S3:

4) Solid-state time relay block, on-delay
5) Solid-state time relay block, off-delay
6) Auxiliary switch block, time-delay (on- or off-delay or wye-delta function)
7) 2-pole auxiliary switch block, infeed from above
8) 2-pole auxiliary switch block, infeed from below
9) 4-pole auxiliary switch block
   (terminal markings in acc. with DIN EN 50 012 or DIN EN 50 005)
10) Parallel link (neutral bridge), 3-pole, without terminal
11) Parallel link, 3-pole, with terminal
12) 2-pole auxiliary switch block, attachable on the right or left side
    (terminal markings in acc. with DIN EN 50 012 or DIN EN 50 005)
13) 1-pole auxiliary switch block (a maximum of 4 can be snapped on)
14) Mechanical interlock, attachable at the side

15) Mechanical interlock, attachable at the front
16) Wiring blocks above and below (reversing mode)
17) Surge suppressor (varistor, RC element, diode combination), attachable above or below (varies for S0 and S2/S3)
18) Coupling link for direct connection to the contactor coil
19) LED block to display contactor function

For frame sizes S2 and S3 only:

20) Terminal for contactor coil for setting up contactor combinations
21) Terminal cover for box terminals

For frame size S3 only:

22) Terminal cover for terminal end and bar connection
23) Auxiliary connecting lead terminal, 3-pole

1.3 System features

The entire SIRIUS range of devices is divided up into only four frame sizes (S00 to 5.5 kW (7.5 HP), S0 to 11 kW (15 HP), S2 to 22 kW (40 HP), S3 to 45 kW (75 HP) at 400 V) with three different frame widths (45 mm for S00 and S0, 55 mm for S2 and 70 mm for S3) and has a uniform range of accessories for all frame sizes.

Modular system

The individual components of the SIRIUS range are building blocks in a modular system that are harmonized in terms of both their frame size and their technical specifications. This ensures that individual requirements can be met quickly and cost-effectively.

Uniformity

The devices are harmonized with regard to their ratings and their technical specifications:

- The same width ensures rapid installation.
- The terminal systems are standardized, and devices with the same rated current have the same terminals.

Performance capability

All SIRIUS devices can be mounted side by side without derating in an ambient air temperature of up to 60 °C.

Accessories

All accessories, such as the auxiliary switches and surge suppressors, can be mounted and removed without tools.
You can use link modules that connect devices both mechanically and electrically to put together combinations of devices and build fuseless load feeders.

Communication

The interface of SIRIUS-control components with a high level control system is in addition to the conventional wiring is possible over networking systems:

- AS-Interface
- PROFIBUS-DP

Using these networking systems SIRIUS-control components are incorporated in the SIEMENS automation concept Totally Integrated Automation. Totally Integrated Automation offers the user threeway continuity in planing/programing, data management and communication.

Safety technology

SIRIUS-control components are often used in safety related installations. With the Safety Integrated-concept, solutions ranging from safety relays up to fail safe communication over AS-Interface or PROFIBUS-DP can be achieved.

1.3.1 Environmental requirements

SIRIUS-control components are made for any climate and are suitable and tested for global usage.
The related environmental requirements are described in DIN EN 60721-3-3
Important environmental requirements:
Ambient temperature: -25 to +60 °C
Relative humidity: 10 to 100 % (occasional condensation)
Additional information to the subject environmental requirements can be found in the handbook "Switching, Protection, and Distribution in Low-Voltage Networks" (1994), P. 65.

1.3.2 Environmental protection

SIRIUS-control components do not contain Halogen, Asbestos, or Cadmium.
The manufacturing of SIRIUS devices complies with, as one of the very few manufacturing locations, the stringent requirements of the EU-Öko-Audit-Directive.
All SIRIUS devices work energy efficient and are close to being completely recyclable.

1.4 Components and combinations

This section describes the components of the SIRIUS system and the device combinations that are possible with these components.

Components of the SIRIUS system

The following table contains a list of the components of the SIRIUS system together with the most important accessories:

Components	Brief description/features	Accessories
3RV1 circuit breakers (in USA/Canada: Motor Starter Protector)	- Switch and protect motors up to 100 A	- Auxiliary switches (transverse, lateral) - Undervoltage releases - Shunt releases - Alarm switches - Housing - 3-phase busbar system
3RT10 motor contactors	- Switch motors up to 45 kW (75 HP) and currents up to 95 A - Types: 3-pole for switching - 4-pole, with 4 NO or 2 NO + 2 NC contacts - Soldering pin adapter - Capacitor switching contactor - -Reversing and wye-delta combinations	- Auxiliary switch blocks - Surge suppressors - Parallel links - Time relay blocks - Link modules - Wiring blocks
3RH11 control relays	- Same type of construction as the 3RT - Basic version: 4-pole, expandable to 8 pins by means of auxiliary switch blocks - High contact stability (1 mA; 17 V)	
3RT10/3RH11 contactor relays	- Switch motors and auxiliary contactors with an extended operating range (17 V to 30 V)	
3RU11 overload relays	- CLASS 10 - Phase loss sensitivity - Series auxiliary contacts 1 NO + 1 NC contact - Frame size S00: repetition terminal for the auxiliary contact and coil connection for attachment to contactors - Integrated, transparent and sealable cover for the adjusting knob and test function	- Remote RESET, electrical - Mechanical RESET - Terminal bracket for stand-alone installation
3RB10 overload relays	- CLASS 10 and CLASS 20 - Rapid tripping operation in the event of phase loss (< 3 s) - Series auxiliary contacts 1 NO + 1 NC - Low power loss, energy-saving - Wide adjustment ranges for simple configuration, selection, and less storage - Extremely low energy requirements, approx. 50 mW	- Remote RESET, electrical - Mechanical RESET - Terminal bracket for stand-alone installation

Table 1-1: Components and combinations with accessories

Components	Brief description/features	Accessories
3RB12 overload relays	- CLASS 5 to CLASS 30 can be set - Phase loss sensitivity - 2 outputs per 1 NO + 1 NC contact - Integrated current transformers in all sizes - Motor protection due to the connection of a thermistor sensor circuit - Internal ground fault monitoring - Overload warning - Remote and automatic reset possible - High tripping accuracy - Wide adjustment ranges - Self-monitoring	- Summation current transformer for external ground fault monitoring - DC adapter - Terminal cover
3RA1 load feeders (combination starters)	- Load feeder (combination starter) consisting of a circuit breaker (MSP) and contactor - Simple assembly with link modules and wiring blocks - Reversing combination (link modules) - Wye-delta combination	- Accessories for the basic devices (contactors and circuit breakers) - Special accessories: Auxiliary switches connectable from above or below
3RP20/15 solid-state time relays	- 8 adjustable time ranges from 0.05 seconds to 10 hours - Constantly high repeatability - Type with combination voltage (24 V DC and 110 to 240 V AC) - 2 device types: on-delay and multifunctional (7 functions) - Long mechanical and electrical service life	- Coding plug sets - Locking device
3RW30/31 soft starters	- Reduction of the starting current for a smooth start - Soft coasting down function - Only 3 motor supply leads are required - System adaptation using setting options: starting time, starting voltage, coasting down time	- Fans
Load feeders (combination starters) with communication capability	Complete pre-wired Load feeders (combination starters)/Motor starters - for AS-Interface in degree of protection IP20: AS-Interface Load feeders (combination starters) 3RA5 - for AS-Interface in degree of protection IP65: AS-Interface compact starter - for PROFIBUS-DP in degree of protection IP20: distributed I/O ET 200S - for PROFIBUS-DP in degree of protection IP65: discredited I/O ET 200X - for AS-Interface and PROFIBUS-DP in degree of protection IP65: ECOFAST motor starter	- AS-Interface system accessories - Supply modules/-wiring / AS-Interface system accessories - System accessories ET 200S - Supply modules/-wiring / system accessories ET 200X - Supply modules/-wiring / system accessories ECOFAST

Table 1-1: (cont.) Components and combinations with accessories

Device combinations

The following diagrams show you the possible device combinations, using the S00 frame size as an example

Fuseless
load feeder (combination starter)

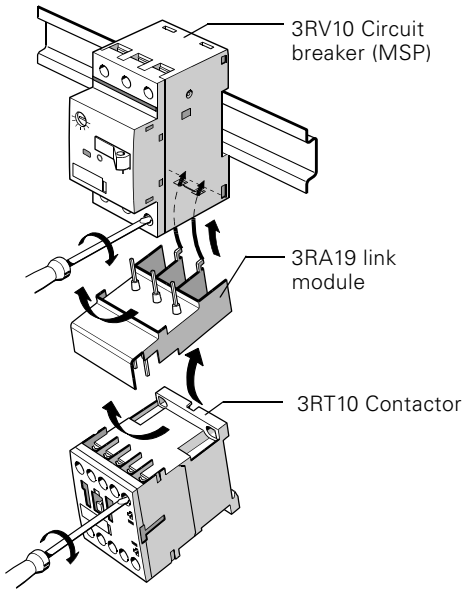

Fused
load feeder

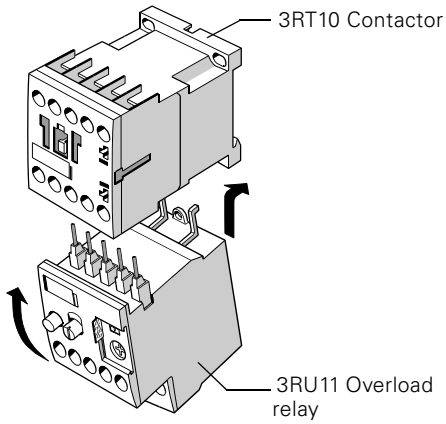

3RA13 reversing combination

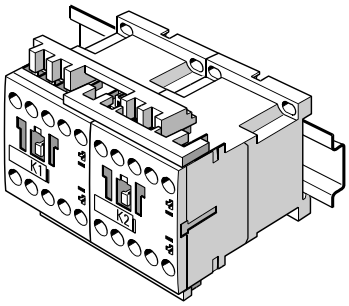

3RA14 Wye-delta combination

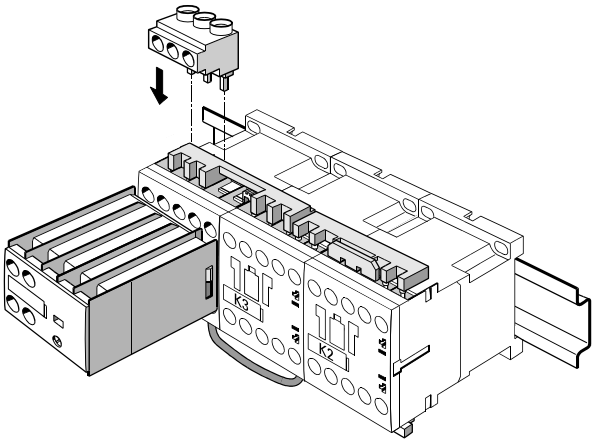

Fig. 1-6: Device combinations

Contactor combination for reversing the S00 frame size (with accessories)

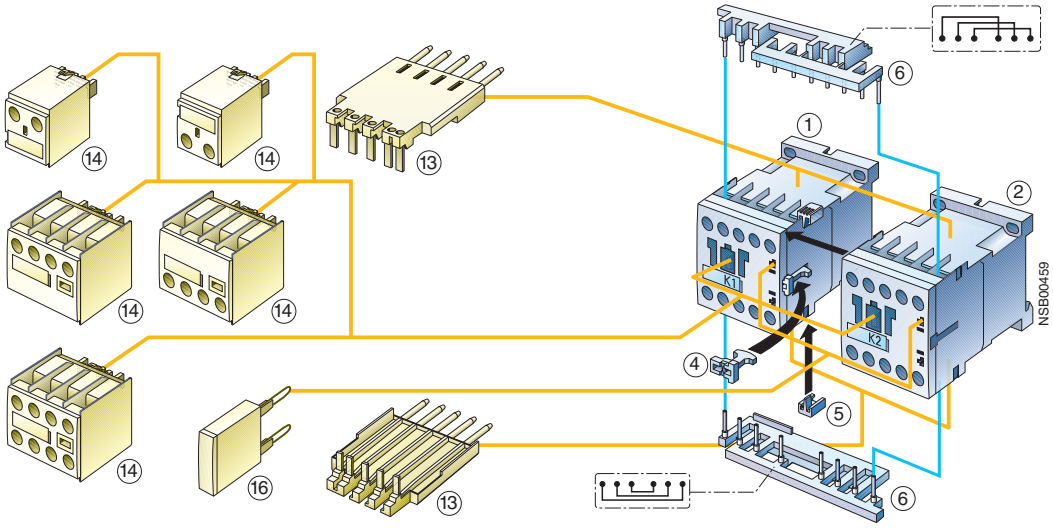

Fig. 1-7: Contactor combination for reversing

Individual parts:
1/2) Contactors
4/5/6) Kit

The kit includes:
4) Mechanical interlock
5) 2 connection clips for 2 contactors
6) Wiring blocks above and below to connect the main conducting paths with electrical interlock (NC contact interlock - can be removed if required)

Attachable accessories:
13) Soldering pin adapter
14) Auxiliary switch block, on the front (only an auxiliary switch block that complies with DIN EN 50 005 can be used)
16) Surge suppressor

1.5 Mounting methods and terminal systems

1.5.1 Mounting the equipment

The method of mounting the equipment is uniform within each frame size.

Frame size	Mounting	Removal
S00 to S3	Panel Mount	Removed with a screwdriver
S00, S0	Snapped onto a 35 mm rail (in acc. with DIN EN 50 022)	Removed without a tool
S2	Snapped onto a 35 mm rail (in acc. with DIN EN 50 022)	The snap-on spring can be opened with a screwdriver
S3	Snapped onto a 35 mm rail (in acc. with DIN EN 50 022) Snapped onto a 75 mm rail	The snap-on spring can be opened with a screwdriver

Table 1-2: Mounting methods

Panel mounting

The SIRIUS switching devices can be screwed on to a flat surface.
Please note the following points with some of the devices:

- 3RV1 circuit breaker (MSP), frame sizes S00/S0: Push-in lugs are required for screw-type panel mounting
- 3RP15 time relay: Push-in lugs are required for screw-type panel mounting
- Coupling links: No screw-type panel mounting
- Soft starters: No screw-type panel mounting

Snap-on mounting (DIN rail mounting)

The SIRIUS switching devices are snapped onto 35 mm DIN rails in acc. with DIN EN 50 022 without a tool.
The devices with a frame size of S3 require a rail with an installation height of 15 mm. Alternatively, they can also be snapped onto 75 mm rails.

The following table shows you how to mount the device onto the DIN rail:

Frame size	Procedure	Illustration
S00/S0	Place the device on the upper edge of the rail, and press it downwards until it snaps onto the lower edge of the rail.	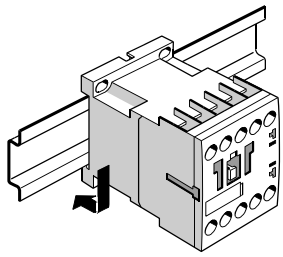
S2/S3	Place the device on the upper edge of the rail, and tilt it towards the rail until it snaps onto the lower edge of the rail.	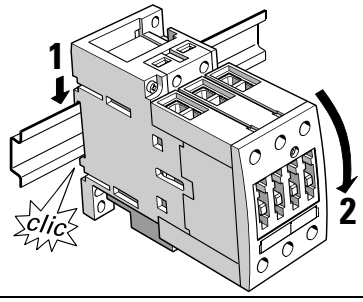

Table 1-3: Mounting the device on the DIN rail

The following table shows you how to remove the device from the DIN rail:

Frame size	Procedure	Illustration
S00/S0	Push the device downwards to release the tension of the mounting spring, and remove the device by tilting it.	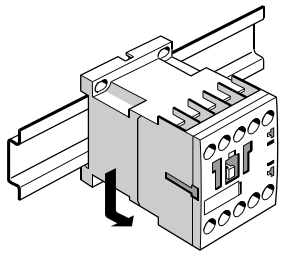
S2/S3	Using a screwdriver, push the clip on the lower rear side of the device downwards to release the tension of the mounting spring **(1)**, and remove the device by tilting it **(2)**.	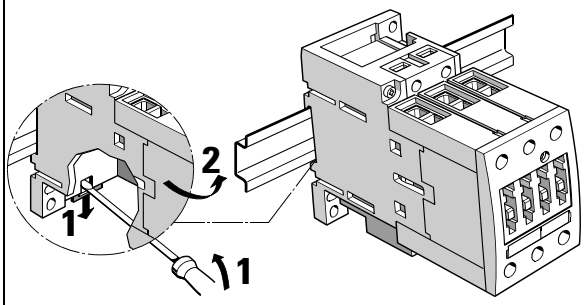

Table 1-4: Removing the device from the rail

You will find notes on mounting the different devices onto DIN rail in the relevant parts of the fifth section of any chapter entitled "Mounting and connection".

1.5.2 Screw-type terminals

The terminals used do not vary within a frame size. The current switched by the different devices of a single frame size does not vary either. This means you can use the same tool, torque, and conductor cross-section for the circuit breakers, contactors, and overload relays of a single frame size. The stripping lengths of the conductors are also the same. This is important in the case of prefabricated wiring.

Screw-type terminals

All the devices have screw-type terminals, either a terminal with a top washer or a box terminal, depending on the frame size.
Devices with frame sizes S00 and S0 have terminals with captive screws and terminal washers that enable you to connect 2 conductors, even if they have different cross-sections.
The box terminals of frame sizes S2 to S3 can also take 2 conductors with different cross-sections.

Connection tools

Use the following tools to make the connection:

- Frame sizes S00 to S2: Screws are available for rated currents of up to 50 A for Pozidriv2 screwdrivers.
- Frame size S3: To obtain the required torques for the frame size for up to 95 A, Allen screws are used.
  - Frame size S3: Allen screw SW4

The screwdriver guides around the terminal allow screw driving machines to be used.

Lugs and connecting bars

You can remove the box terminals from the devices with a frame size of S3 to connect conductors with lugs or connecting bars. A terminal cover is available as shock protection and to ensure that you comply with the required creepage and clearance distances when the box terminals are removed. You can find a detailed description in the forth section of an individual chapter entitled "Accessories".

1.5.3 Cage Clamp[1] terminals

The Cage Clamp® terminal system is now available for circuit breakers (MSPs), contactors, overload relays, and time relays.
Cage-type clamping units, known as Cage Clamp terminals in the case of SIRIUS products, facilitate quick and maintenance-free wiring.

Design

The Cage Clamp terminal consists of two parts:
- A power rail for conducting current
- A spring cage-type clamp for clamping strength

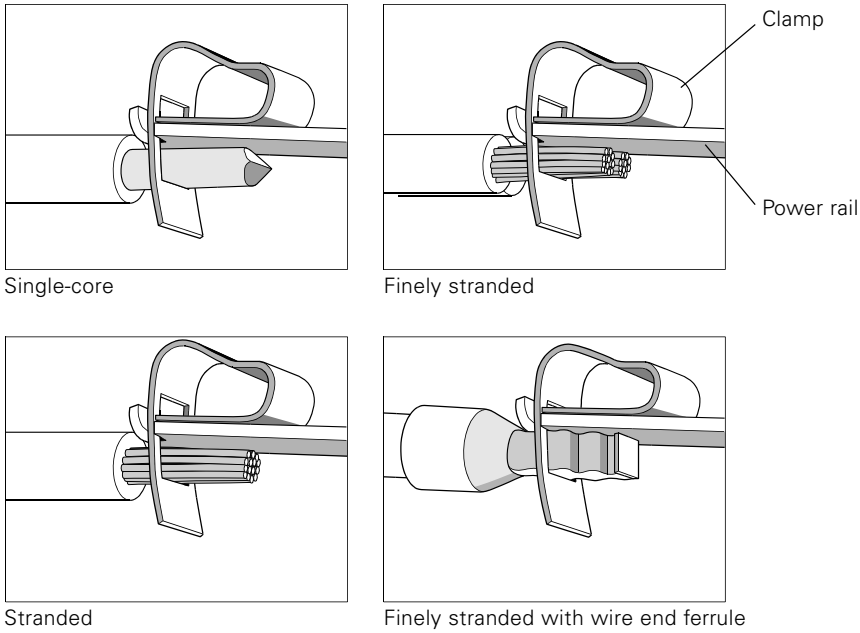

Fig. 1-8: Cage Clamp terminal

Conductors

The Cage Clamp terminal on the switching devices clamps all copper wires (single-core, stranded and finely stranded) from 0.25 mm^2 to 2.5 mm^2. The conductors can be clamped directly or with some protection for splicing. To this end, wire end ferrules or pin-end connectors can be placed on the conductor ends. The best solution is an ultrasonically condensed conductor.

1. Cage Clamp® is a registered trademark of the Wago Corporation

Safety

The devices are equipped with a two-wire connection. In other words, there are two independent connections for each conducting path.
Only one conductor is connected to each clamping unit.
The clamp presses the conductor against the power rail, which is curved at this point. A highly specific compressive load per area is achieved making it gas tight.
The clamp presses its flat surface against the conductor, thus avoiding damage to it. The spring force of the clamp is designed so that it automatically adjusts to the radius of the conductor. This allows any deformation of the conductor to be dealt with. It is not possible for the clamping unit to loosen by itself.
This connection is vibration- and shock-proof. These types of stress do not damage the conductor or cause any loss in contact.
Machines and systems in which this type of stress occurs, such as vibrators, rail vehicles and elevators, are particularly suitable applications for this connection.

Transfer accuracy

The contact pressure between the conductor and power rail is optimal, making this clamp terminal suitable for high-voltage installations and also for the transfer of voltages and currents in the mV and mA ranges in measuring technology and electronics.

Tool

Screwdrivers for opening the Cage Clamp terminals can be obtained from the SIEMENS low voltage controls catalog.

Procedure

The following table shows you how to use the Cage Clamp

Step	Procedure	
1	Insert the screwdriver into the rectangular opening until it stops. The screwdriver head automatically keeps the clamp open.	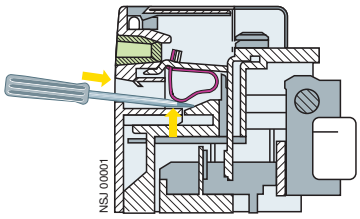
2	Insert the conductor into the oval terminal opening.	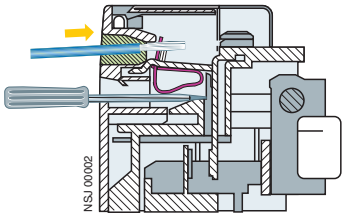
3	Remove the screwdriver. The terminal closes, and the conductor is thus securely clamped.	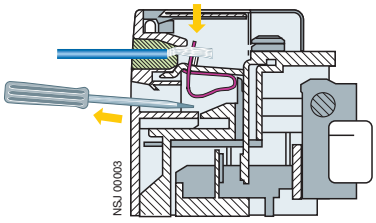

Table 1-5: How to use a Cage Clamp terminal

Small conductor cross-section

With conductor cross-sections that are ≤ 1 mm^2, you should use an insulating stop to avoid contact between a terminal and the conductor insulation. The illustration below shows the procedure:

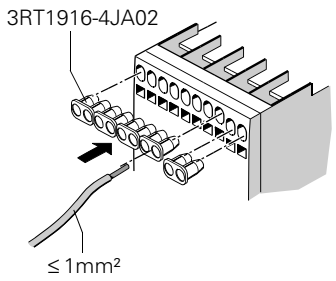

Fig. 1-9: Conductor cross-sections ≤ 1 mm²

1.5.4 Connection cross-sections

Because SIRIUS is a modular system, the connection cross-sections are the same for all devices of a single frame size.
The following tables specify the permissible conductor cross-sections for main and auxiliary conductor connections. The example shown is frame size S0:

Frame size S0

	Coil terminals: A1/A2 Auxiliary conductor: NO/NC		**Main conductor**
	Screw-type terminals	**Cage Clamp terminals**	**L1 L2 L3 T1 T2 T3**
∅ 5 ... 6 mm / PZ2	0.8 to 1.2 Nm 7 to 10.3 lb·in	—	2 to 2.5 Nm 18 to 22 lb·in
10	2 x (0.5 to 1.5 mm²) 2 x (0.75 to 2.5 mm²)	2 x (0.25 to 2.5 mm²)	2 x (1 to 2.5 mm²) 2 x (2.5 to 6 mm²)
10	2 x (0.5 to 1.5 mm²) 2 x (0.75 to 2.5 mm²)	2 x (0.25 to 1.5 mm²)	2 x (1 to 2.5 mm²) 2 x (2.5 to 6 mm²)
10	—	2 x (0.25 to 2.5 mm²)	—
AWG	2 x (18 to 14)	2 x (24 to 14)	2 x (14 to 10)

Table 1-6: Connection cross-section for frame size S0

1.6 Communication

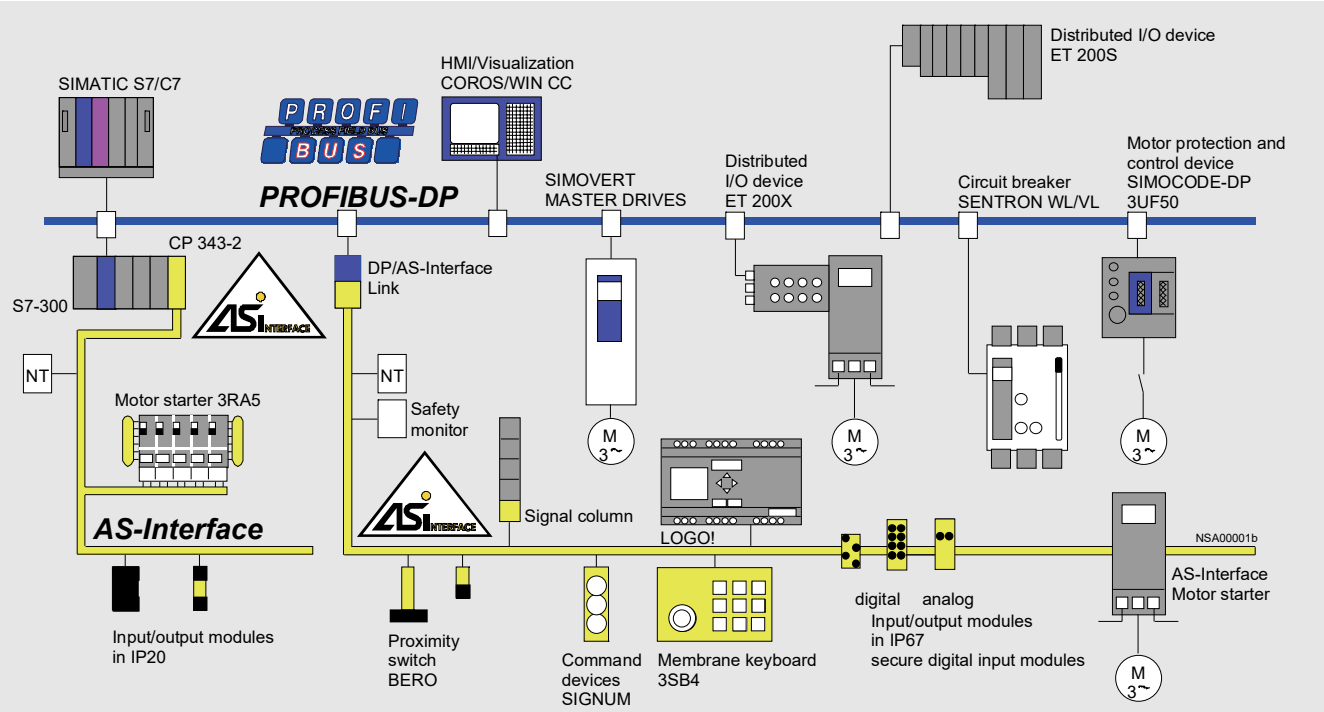

Fig. 1-10: Communication

1.6.1 Communication-capable low-voltage switching technology

The communication-capable control components from SIEMENS ensures the user a continuous Automation solution from network up to the control panel. The concept is based on using AS-Interface and PROFIBUS-DP, the two standardized and open networking systems, which can be connected to by virtually all of the known control system manufacturers.

Actuator-sensor interface (AS-Interface)

AS-Interface is a standardized, non-proprietary networking system (IEC 62026-2) for simple and usually binary actuators and sensors. It is possible to connect it to SIMATIC programmable logic controllers via different master modules. A DP/AS-Interface link also ensures direct integration in a PROFIBUS-DP system or connection to other field buses via couplers. Up to 248 sensors and 186 actuators can be connected to an AS-Interface network over a maximum of 300 m. Safety-related signals can now also be networked with AS-Interface, thus dispensing with the wiring of emergency stop signals that were previously needed.

PROFIBUS

PROFIBUS is a standardized, non-proprietary networking system (IEC 61158) to which most PLCs of leading manufacturers can be connected. Up to 125 nodes can be incorporated in one bus segment. Distances of up to 9.6 km can be bridged with copper conductors and up to 100 km with fiber-optic conductors.

PROFIBUS-DP

PROFIBUS-DP (DP being a German abbreviation for distributed I/O) is used for switching devices with higher communication requirements (e.g. the transmission of a large volume of data with extremely fast response times). It is also used to link individual AS-Interface segments.

PROFIsafe

PROFIBUS-DP can also transfer safe signals. The PROFIsafe-Protocol can be used to communicate safe inputs and outputs with a fail safe controller.

1.6.2 Parameterization of PROFIBUS-DP and bus-capable low-voltage switching devices

Before commissioning, PROFIBUS-DP must be configured, and the individual bus nodes must be parameterized. There are user-friendly tools available to the user for configuration and parameter assignments.

Parameter assignment tools

- For SIMATIC S7 masters, all the functions are integrated in the STEP 7 programming language.
- For SIMATIC S5 masters and various non-SIEMENS masters, the COM PROFIBUS parameter assignment software is required.
- Manufacturers of non-SIEMENS masters offer other configuration and parameter assignment programs.

There are various product specific software packages available that allow you to easily parameterize and diagnose your low voltage control devices with a variety of functions.
COM SIMOCODE for the motor protection- and control device SIMOCODE-DP.
SWITCH ES motor starter for ECOFAST Motor starter and ET 200S High Feature motor starter.
These Software packages are either completely incorporated in STEP 7, communicated via PROFIBUS-DP or directly via a serial interface with the respective field device

Applications

The above program packages make it easy to carry out the following for PROFIBUS-DP and its nodes:
- Configuration
- Parameter assignment
- Documentation
- Commissioning
- Testing
- Diagnostics

For additional information on communication-capable low-voltage switching devices, as well as system components and accessories, see the following catalogs:
- Industrial Controls Catalog (PC 6000)
- IK PI "Industrial Communication and Field Devices"
- CA01 "Automation- and Drives technology" (CD-ROM)

1.6.3 Actuator-sensor interface (AS-Interface)

Actuator-sensor interface (AS-Interface) is a modular networking system for sensors and actuators in the lowest field range.
It makes no difference to the program in the programmable controller whether parallel wiring with input/output modules or AS-Interface is used. It is therefore possible for existing systems to change to AS-Interface because you can continue to use the same programs. The entire system can be operated without additional software. It is not necessary to be familiar with the internal workings of AS-Interface.

Replacement for the cable harness

Process signals that occur locally are normally transferred to the open loop control using extensive parallel wiring and input/output modules. This means that each sensor or actuator in the field is connected to the input/output modules with its own cable. AS-Interface makes it possible to replace this cable harness with a simple two-wire cable for all sensors and/or actuators.

Data and power on a two-wire cable

The master communicates with the nodes via the AS-Interface cable. As well as data, this cable also transfers the supply voltage for node operation and node inputs, i.e. sensors. The voltage is supplied to the AS-Interface cable from a special AS-Interface power supply unit with a data link.

Setting up different structures

The AS-Interface cable is installed in the same way as for an electrical installation. A new node can be inserted at any point. This makes it possible to set up network structures (e.g. tree, star or line structures). No shielding or terminating resistors are required. The wiring can be adapted individually to the system or machine.

Maximum System configuration

Detailed configuration and installation guidelines can be found in the installation guideline "Installation of the AS-Interface networking system" (on mounting the AS-Interface networking system).
Up to 62 nodes can be connected to the AS-Interface cable. A node is, for example, an AS-Interface module (digital or analog) or a BERO (proximity switch) with an integrated AS-Interface chip. A maximum of 4 binary sensors and/or 4 actuators can be connected to an AS-Interface module.
This produces a maximum configuration of 248 inputs and 186 outputs (62 nodes x 4 inputs and 3 outputs).

Degree of protection

AS-Interface is a networking system for direct use on the machine. The AS-Interface compact module has an IP67 degree of protection. They can be used without an enclosure.
There are also AS-Interface modules with IP20 protection for use in enclosures or distribution panels.

Installation system

All compact modules are placed on a mounting plate. The mounting plate takes the AS-Interface cable and keeps it in place. Polarity reversal is virtually impossible due to the profile of the cable. The compact modules are simply hooked on at the top of the mounting plate and secured with just one screw. When you secure the modules, contact is made with the AS-Interface cable. You do not have to strip or screw on the cable.

Coding prevents errors

All the modules are mechanically and electrically coded.
The coding system prevents errors occurring in the event of replacement. At replacement, only one module of the same type can ever be mounted. This stops digital or analog modules (or even inputs or outputs) getting mixed up.

Addressing

To participate in data transfer with the master, each node must be assigned an address before commissioning of the AS-Interface network. Addressing devices are available for this.

Addressing an installed module

There is an additional feature which makes new SIEMENS modules even more user-friendly: the addressing socket.

Using this socket you can address a module after it has been installed. It is not necessary to unscrew the module. Installation can be carried out in the system by personnel who are not familiar with the AS-Interface. The commissioning engineer can address the modules easily when they are already installed. For the first time, this type of addressing is also possible with IP67 protection.

Diagnostics at a glance

The new generation of AS-Interface modules (compact modules, analog modules, and SlimLine modules) has the new display system developed by SIEMENS.

The status of a module is displayed by two LEDs lighting up continuously or flashing.
This simple diagnostic feature directly on the module makes it possible for the user to find the error quickly and efficiently. This in turn reduces downtimes.

Certificates of the AS-Interface association

All SIEMENS AS-Interface products are tested in accordance with the relevant testing regulations in an accredited test laboratory and certified by the AS-Interface association.

Digital compact modules with IP67 protection

AS-Interface modules in the compact range are characterized by optimized operating features and improved user-friendliness.
This can reduce mounting and commissioning times for AS-Interface by up to 40 %. Additional LEDs provide information on the most important operating modes of the module, resulting in a considerable increase in system availability.
The modules of the compact range consist of two components:
Mounting plate and compact module
The mounting plate mechanically fixes the AS-Interface profile cables, takes the compact module, and serves as a template with drill holes.
The compact module contains the electronic components for communication and the M12 standard connections for inputs/outputs. Up to four sensors and four actuators can be easily and reliably connected to the compact module using the M12 standard connection.
The mounting plate and compact module are connected to each other by means of a single screw. Contact is established with the AS-Interface cable by means of the proven insulation displacement method.
AS-Interface modules in the compact range with an M12 connection can have a protective conductor (PE) connected to them.
Using an addressing socket integrated in the compact module, you can also allocate addresses when the module is in place.

Analog compact modules with IP67 protection

The design of the analog modules has been adapted for the compact modules. The analog input and output modules each have two channels. You can connect measuring sensors and analog actuators using standard M12 connectors. The following groups of analog modules exist:

- Input module for two current sensors
- Input module for two voltage sensors
- Input module for two thermal resistors
- Output module for two current actuators
- Output module for two voltage actuators

All the measured values – except for the thermal resistance value of Pt 100 (not linear) – are available in linear form. In other words, the non-linear transmission curve of the thermal resistor sensor is automatically linearized in the analog module, and measured values can be processed directly in the programmable controller.
The input and output channels are isolated. Two-wire and four-wire sensors can be connected. Differential inputs produce considerable suppression of common-mode interference. The integrating sigma-delta converter ensures high measurement accuracy.

Safety first – emergency-Stop via AS-Interface

AS-Interface is a system that can transmit both standard signals and safety-related input signals (e.g. Emergency stop) via the same cable.
Only an additional safety monitor and safe modules are required to use AS-Interface as a safety bus. This enables category 4 in acc. with EN 954-1 to be achieved. A failsafe programmable controller or special master is not necessary.
The concept and implementation of AS-Interface Safety at Work (AS-Interface SaW) have been tested and certified by TÜV (technical testing association).
This means that the system can be converted to the considerably more flexible AS-Interface network, which is already available, thus eliminating the need for the complex, separately implemented emergency stop wiring that has been necessary up to now.
The following components for direct connection to AS-Interface are available:

- Safety monitors
- Safety modules
- Emergency-Stop devices
- Light curtains
- Laser scanners

A/B-Technique

The new AS-Interface-specification allows the doubling of the number of nodes on the network from 31 to 62. The 31 addresses that are possible in an AS-Interface network can be subdivided into two separately independent subaddresses e.g. in 1A and 1B .
If one uses this feature for all 31 slaves, then it is possible to have a maximum of 62 nodes on one AS-Interface network. The so-called A/B-Slaves can have a maximum of four inputs and three outputs.
Another function of the new AS-Interface specification V2.1 is the integrated analog value transfer. Integrated means that a special function block is not required in order to be able to access the analog values. Accessing data of analog values is therefore just as easy as with digital values. The use of integrated analog value transfer is possible with analog nodes, that support Profiles 7.3 and 7.4.

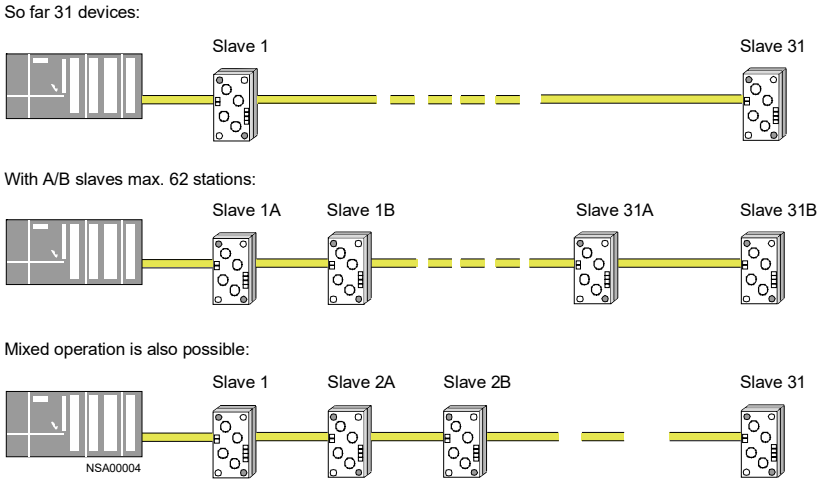

Fig. 1-11: A/B-Technique

1.6.4 SIRIUS NET Communication-capable motor starter

SIRIUS NET is the name of the family of communication-capable motor starters from SIEMENS. SIRIUS NET motor starters are available with AS-Interface and PROFIBUS-interface, in IP20 degree of protection for use inside the control panel or distribution panel, and in IP65 degree of protection for use outside the panel and mounted directly on the machine.
SIRIUS NET motor starters consist of completely pre-wired SIRIUS load feeders/combination starters. This reduces the installation time and wiring time to a minimum. All of the necessary inputs and outputs are already on board. Depending on the design there are many Diagnostic functions that support the user and owner. This reduces downtime and improves efficiency.

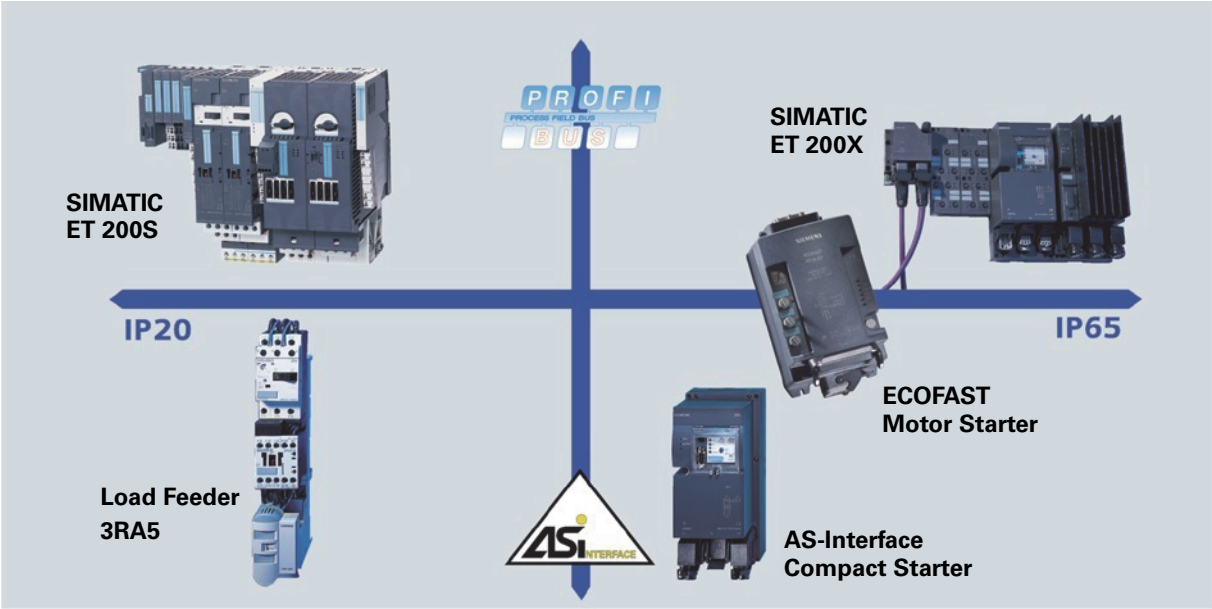

3RA5 AS-Interface load feeder/combination starter

The preferred use of AS-Interface 3RA5 load feeder/combination starter is in central control panels (IP65 degree of protection). It's busbar (Fastbus) adapter for 40 mm and 60 mm systems allows for quick installation. With the connection via busbars, a whole range of 3RA5 load feeders/combination starters can be supplied with power. AS-Interface and auxiliary power are simply connected by using a plug with insulation piercing connection technology. The conductor to the motor can be attached without a terminal strip by using a 5-pole power connector that attaches directly to the starter. Due to its consistent plug-in technology a 3RA5 load feeder/combination starter can quickly be changed out. The 3RA5 load feeder/combination starters are available as direct or reversing starters up to 7.5 kW. For larger loads, devices can be easily assembled by the customer by using standard SIRIUS and AS-Interface components.

AS-Interface compact starter

The AS-Interface compact starter is a starter designed to mount directly on the machine (IP65 degree of protection). The durable plastic housing also makes it suitable for use in the roughest industrial environment. With only two screws it can be mounted on to a mounting plate with very little effort and at the same time it makes contact with the AS-Interface- and auxiliary power flat cable through the proven AS-Interface penetration technique. The main power circuit side is quickly connected to the power bus cable and the motor circuit. Assemblies with a contactor and circuit breaker (MSP) are available up to 5.5 kW and with electronic contact element and electronic overload relay are available up to 2.2 kW either as a direct and as reversing starter. Two inputs on the starter can accept process signals via M12-socket and route them to the PLC. Starters with brake contacts for an electrically operated motor brakes are also optional.

ET 200X

The ET 200X distributed I/O system with the wide variety of expansion modules offers the possibility to provide all of the machines functions directly on the machine - in IP65/IP67 degree of protection. Whether motor starter, frequency converter, pneumatic or input/output module, whether in harsh environments, in extreme time critical applications or a large number of sensors and loads in one place - the modular SIMATIC ET 200X distributed I/O system offers the corresponding decentralized solution for every application in the field. ET 200X consistently provides optimal communication with the high level system via PROFIBUS-DP. A single basic module allows the addition of up to 6/7 expansion modules. With the AS-Interface-Master module in the ET 200X, a mixture of networks can be very easily attained at a reasonable price. The distributed signals in the installation can also be optimally incorporated with very little set-up effort. With the intelligent basic module for data preprocessing and control, distribution of self-supporting and time-critical functions can be realized independent from the higher level PLC. Only the most important control signals and diagnosis data is then sent over PROFIBUS. This relieves the network as well as the high level control. The programing and planning of these types of stations is done with SIMATIC standard tool STEP7.

ET 200X motor starter

The ET 200X motor starter is available in the same designs as the AS-Interface compact starter. That means, as an electro-mechanical starter up to 5.5 kW, electronic starter to 2.2 kW. For further details see above. There is a hand-held controller available that can also be used with both motor starter families for activation at prestart-up and for service use.

ET 200S

The ET 200S distributed I/O system, using PROFIBUS-DP, offers a plurality of 2- and 4-channel input/output modules, Technology modules, such as Standard motor starter, High Feature motor starter and safety technology that can be configured almost any way you want in a fine modular form. The modules with IP20 degree of protection are used in central control panels as well as decentralized panels. All of the voltage potential only needs to be supplied once. Through simple side-by-side mounting of the terminal modules the auxiliary power as well as the main power voltage are automatically transferred. The purely passive terminal modules are the basis for the electronic modules that mount on them. These electronic modules can also be removed or added while in the system is running. This safeguards the accessibility of the machines and installation.

ET 200S motor starter

The ET 200S motor starters are completely pre-wired SIRIUS load feeders/ combination starters with short-circuit protection and overload protection. The required inputs and outputs for control and monitoring are already integrated in the motor starter. The correct function of the motor starter is monitored without any additional programming and will initiate a clear error signal via PROFIBUS-DP if needed.

ET 200S SIGUARD

The motor starters can be expanded for technical safety applications (EN 954-1) with the SIGUARD power modules. Emergency-stop buttons, safety limit switches or other floating contacts from safety devices use a two channel connection. The functions on the sensor side are in accordance with the standard and are monitored for, among other things, cross-circuit or short-circuit. The integrated safety relays also check the proper switching of the motor starters listed below. Additionally ET 200S Standard motor starter requires a so-called F-Kit - a front mounted auxiliary contact- (return circuit). The High Feature motor starter comes with these contacts already factory installed. A special Connection module needs to be installed at the end of a safety segment with one or more motor starters. For applications that require category 3 or 4 (EN 954-1) a redundant infeed contactor needs to be connected to the connection module (control and monitoring). For applications that require category 2 the return circuit needs to be closed on the Connection module by using a jumper.

ET 200S Standard motor starter

ET 200S Standard motor starter consists of a circuit breaker (MSP) and contactor combination from the SIRIUS S00-Frame size. At a maximum rating of 5.5 kW, the motor starter gets power from the terminal module on the self-establishing power bus (40 A). All that remains per motor starter is simply adding the three conductors of the motor load and optional neutral/ground connection. Distribution wiring on pre-stored terminal blocks is no longer necessary, since the terminal modules already provide this function.

ET 200S High Feature motor starter

The ET 200S High Feature motor starter is a new class of load feeder/combination starter up to 7.5 kW. Motor circuit breaker (MSP) for short-circuit protection, electronic overload relay for the overload protection, and contactor or soft start for switching the circuit offer a range of new features:

- The devices in frame size S0 have achieved Type 2 coordination for the current ratings up to 16 Amps (7.5 kW). That means, that even after a short circuit in the range of 50 kA the motor starter will not be destroyed and can still be used. Only light welding of the contacts, without any deformity worth mentioning and which can be separated by the user, is permitted.
- The current monitoring in all three phases serves as both the overload evaluation and as the processing in the high level control. As an alternative to cyclic current value transmission it is also possible to set of an upper and a lower limit value for each. These can be used, for example, for the load dependent, autonomous shutting off of the starter.
- All of the settings, as well as the rated motor current are automatically transferred to the new starter by the high level controller in the event a starter needs to be exchanged.

- In the case of an exchange you only need to choose between two starter types. The electronic overload relay offers an extraordinary adjustment range (0.3 to 3.0 A and 2.4 to 16 A).
- In some critical applications the process can be more important than the protection of the motor. That is why under the estimation and supervision of the user there is the possibility with the High Feature motor starter to suppress the overload tripping function and continue operation of the motor starter with the emergency start function.

The quickest assembly through completely pre-wired and simple plug-in technology were added so that a range of functions could lead to increased system availability. This makes the starter especially suitable for applications that contain both time-critical and valuable processes.

ET 200S Failsafe motor starter

The ET 200S Failsafe motor starter takes the advantages of the High Feature motor starter and supplements them with the requirements from the Safety technology. An integrated monitoring function checks whether or not the contactor opens properly when the motor starter is turned off. For example, should the contactor be welded and therefore can't open, the circuit will be automatically opened by the motor circuit breaker (MSP). It therefore meets the required redundancy of EN 954-1 for category 4 without any additional mounting or wiring time. You can assign up to 6 separate safety circuits of different motor starters inside of a single station to each upstream power module. The control takes place either over a Safety related control system, for example SIMATIC S7-300F and PROFIBUS-DP (PROFIsafe) or over a separate safety switching device, for example the safety monitor from AS-Interface Safety at Work.

The advantage in using the Failsafe motor starter solution lies in the flexible order of various safety circuits and the integrated switching redundancy in every starter. The cost to achieve this type of installation with conventional technology would be much higher. However, if a larger group of motor starters in one safety segment is needed, then a solution with ET 200S SIGUARD could be the more favorable one.

For its safety function, the Failsafe motor starter requires that the contactor contacts are electrically isolated from each other. Therefore, a design with a softstarter function is not available.

Switch ES motor starter

The Switch ES motor starter, the easy to use configuration and diagnoses tool, not only lets you comfortably configure and diagnose the High Feature motor starter while in operation with an on the spot point-to-point connection, but also supplies a range of additional information, such as statistics data. That way the operating hours or the motor current during the last overload trip can be called up. Important information on the condition of the installation can then be derived. The control function also comfortably lets you test the motor starter without high level control, such as at prestart-up.

2

3RV1 Circuit breaker/MSP [1)]

Section	Subject	Page
2.1	**Specifications/regulations/approvals**	**2-3**
2.2	**Device description**	**2-5**
2.2.1	General description	2-6
2.2.2	Operation	2-7
2.2.3	Information on configuration	2-10
2.3	**Application and areas of use**	**2-13**
2.3.1	Motor protection	2-13
2.3.2	Transformer protection	2-13
2.3.3	Starter protection	2-13
2.3.4	Motor protection with overload relay function	2-14
2.3.5	Switching direct current	2-15
2.3.6	Main and emergency stop switches	2-15
2.4	**Accessories**	**2-16**
2.4.1	Attachable accessories: Overview	2-16
2.4.2	Auxiliary contacts 3RV19 01-.., alarm switch 3RV19 21-111 and auxiliary release 3RV19 .2-....	2-17
2.4.3	Motorized remote-control mechanism 3RV19 .6-....	2-22
2.4.4	Disconnecting/isolator module 3RV19 .8-1A	2-25
2.4.5	Thru-the door rotary operators 3RV19 .6-..	2-27
2.4.6	Terminals for "Combination Motor Controller Type E" in acc. with UL 508	2-33
2.4.7	Enclosures and mounting accessories	2-34
2.4.8	Busbar adapter 8US1 (Fastbus system)	2-39
2.4.9	Isolated 3-phase busbar system	2-43
2.4.10	Link module for connection to a contactor	2-46

[1)] 3RV1 is known in the North America as a Motor Starter Protector (MSP) and is not UL Listed as a circuit breaker

Section	Subject	Page
2.5	**Mounting and connection**	**2-47**
2.5.1	Installation	2-47
2.5.2	Connection	2-48
2.5.3	Device circuit diagrams	2-50
2.6	**Dimensional drawings (dimensions in mm)**	**2-52**
2.7	**Technical specifications**	**2-63**
2.7.1	General specifications	2-63
2.7.2	Permissible rating of approved devices for North America, UL CSA	2-66
2.7.3	Short-circuit breaking capacity Icn in acc. with IEC 60 947-2	2-68
2.7.4	Limiter function with standard devices for 500 V AC and 690 V AC in acc. with IEC 60 947-2	2-70
2.7.5	Characteristics	2-70
2.7.6	Installation guidelines	2-71
2.8	**Application notes for the use of 3RV1 downstream from frequency converters/inverter with pulsing voltage**	**2-72**
2.8.1	Influences of high frequency currents upon the thermal overload release	2-72
2.8.2	Other possible influences	2-73

2.1 Specifications/regulations/approvals

Standards

- The 3RV1 circuit breaker/MSPs comply with the specifications for circuit breaker/MSPs in acc. with IEC 60947-2/DIN VDE 0660, Part 101.
- The circuit breaker/MSPs for motor protection comply with the specifications in acc. with IEC 60947-4-1/DIN VDE 0660, Part 102.
- The auxiliary switches comply with IEC 60947-5-1/DIN VDE 0660 Part 200.

Approvals/ test reports

Confirmation of approvals, test certificates, and characteristics can be obtained under
https://support.industry.siemens.com/cs/ww/en/ps/16027

Terminal markings

The terminal markings comply with DIN EN 50 011.

Utilization categories

Circuit breaker in acc. with IEC 60947-2: A
Motor starter in acc. with IEC 60947-4-1: AC-3 (main conducting paths)
DC - 11 / AC - 15 (control and auxiliary conducting paths)

Main and emergency stop switches

The specifications for the main and emergency switches comply with IEC 60204/DIN VDE 0113 Part 1.

Disconnector specifications

Disconnector specifications comply with IEC 60947-3.

Shock protection

3RV1 circuit breaker/MSPs are shockproof in acc. with DIN VDE 0106 Part 100, even without accessories. You can find additional information on the subject of shock protection in the "Switching, Protection and Distribution in Low-Voltage Networks" manual, p. 37 ff.

Degree of protection

The degree of protection of the 3RV1 circuit breaker/MSP is IP20.
In the terminal area of frame sizes S2 and S3, the degree of protection is IP00, when the lug kits are removed.

Characteristics

The time-current characteristics, the current limitation characteristics and the I^2t characteristics have been determined in acc. with IEC 60947 and DIN VDE 0660.

Conditions of application

Explosion-proof motors
For motor protection circuit breaker/MSP 3RV10, CLASS 10 and for motor protection circuit breaker/MSP with overload function 3RV11, CLASS 10: DIN VDE 0165 and EN 50 019, DMT-Certificate according to directive 94/9 EG (ATEX-Approval).

Nuclear power plants
KTA certificate

Railway vehicles
DIN EN 50 155

Ships and docks
Shipbuilding certificates of classes GL, LRS or DNV.

Requirements for switching high-efficiency motors

The increased requirements for protection devices and switchgear when switching high-efficiency motors are covered by the new utilization category AC-3 introduced in the IEC 60947-4-1 product standard.
The utilization category AC-3 takes into account the higher switch-on characteristic of efficiency-enhanced motors. This is reflected, for example, in a higher starting current when starting squirrel-cage motors.
All SIRIUS protection devices and switchgear that are subject to the IEC 60947-4-1 product standard meet the increased requirements in accordance with utilization category AC-3 and are suitable for use with high-efficiency motors.
The specifications for 3-phase line supply according to IEC 60947-4-1 are valid for the following line system configurations:

Ue voltage specification in the Equipment Manual	**Line system configurations**	
	Three-phase four-wire systems	**Three-phase three-wire systems**
	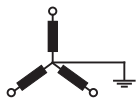	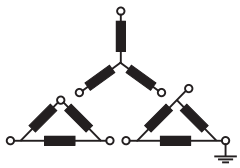
[V]	[V]	[V]
230	--	230
400	230 / 400	400
440	260 / 440	440
500	--	500
690	400 / 690	690
1000	--	1000

-- not specified

Notes on the protection of device connections

The specifications for short-circuit protection (fuses, circuit breakers or miniature circuit breakers) are available for the device connections of the main circuit and of the auxiliary circuit.
In order to enable a holistic assessment of the protection of device connections, the manufacturer is obliged to provide all relevant information on short-circuit and overcurrent protection.
For example, if device connections for control supply voltage, supply voltage or digital inputs and digital outputs are not connected to self-limiting current or energy sources, you will find the relevant information in the Equipment Manual or Technical Data Sheet.

2.2 Device description

3RV1 circuit breaker/MSPs are used to switch and protect three-phase induction motors of up to 45 kW at 400 V AC (100 HP at 600 V AC) and for loads with rated currents of up to 100 A.

The 3RV1 circuit breaker/MSPs have 3 poles. To achieve the highest degree of flexibility, auxiliary switches, alarm switches, auxiliary releases, and other accessories can be easily attached to the circuit breaker/MSPs without tools.

3RV1 circuit breaker/MSPs and 3RT1 contactors work together both electrically and mechanically. This enables them to be easily and quickly put together to make load feeders.

Frame sizes

3RV1 circuit breaker/MSPs are available in 4 frame sizes (S00 to S3).

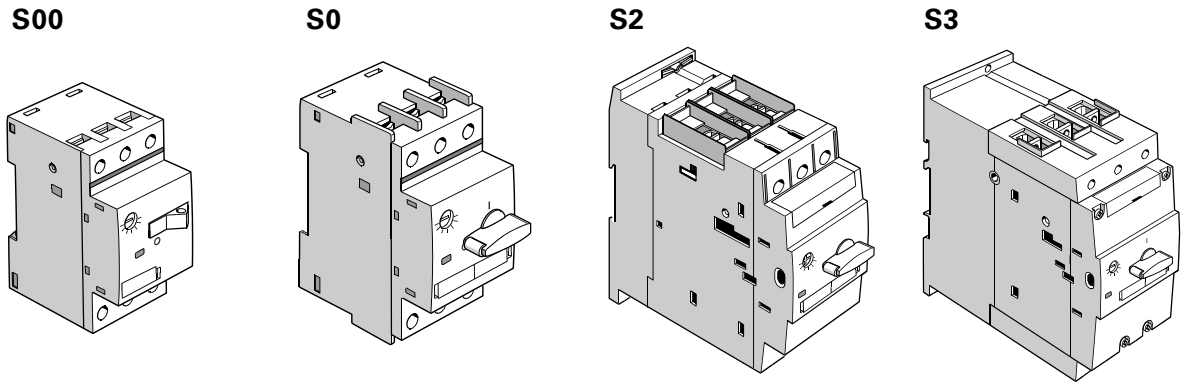

Fig. 2-1: 3RV1 circuit breaker/MSPs (frame sizes S00 to S3)

Terminal labels and notes on the protection of device connections

1/L1	Main circuit terminals	The specifications for short-circuit protection (fuses or miniature circuit breakers) are available for the device connections of the main circuit and the auxiliary circuit. You can find technical specifications of the product in the Siemens Industry Online Support (https://support.industry.siemens.com/cs/ww/en/ps/16244/td). The line protection of the main circuit on the load side is implemented by the circuit breaker without an additional protective device. In the main circuit on the line side and in auxiliary circuits and control circuits, line protection must be considered in line with the configuration standards.
3/L2		
5/L3		
2/T1		
4/T2		
6/T3		
95	Relay function NC contact (NC 95-96)	
96		
97	Relay function NO contact (NO 97-98)	
98		

The following table shows you the frame sizes and the corresponding maximum rated operational current at a voltage of 400 V AC. The last column in the table tells you which three-phase induction motor is suitable for which particular size.

Frame size	Width	Max. rated operational current	Output power of the three-phase induction motor
S00	45 mm	12 A	5.5 kW
S0	45 mm	25 A	11 kW
S2	55 mm	50 A	22 kW
S3	70 mm	100 A	45 kW

Table 2-1: Circuit breaker/MSPs, frame sizes S00 to S3

2.2.1 General description

Fields of application

The 3RV1 circuit breaker/MSPs are suitable for:
- Motor and plant protection
- Starter protection (short-circuit protection)
- Transformer protection

The 3RV16 11-0BD10 circuit breaker/MSP, frame size S00, is used for fuse monitoring.

Releases

3RV1 circuit breaker/MSPs have:
- Inverse-time delay, thermal overload releases
- Instantaneous short-circuit releases

The overload releases can be set to the load current.
The short-circuit releases are set permanently to 13 times the rated current, which allows motors to start up without problems. Circuit breaker/MSPs used for transformer protection are set to 19 times the rated current to avoid being tripped by the high inrush current.
When the circuit breaker/MSPs are tripped, in the case of frame size S00 the toggle switch goes into the tripped position, and in the case of frame sizes S0 to S3 the rotary switch switches to the tripped position. Before it is switched on again, the rotary switch must be put in the 0 position manually (reset) to avoid switching to the fault inadvertently.

In the case of circuit breaker/MSPs with a rotary switch, the tripping operation can also be reported electrically by means of an alarm switch.

Tripping classes

In acc. with IEC 947-4-1:
- Frame sizes S00 to S3: class 10
- Frame sizes S2/S3: class 20

Auxiliary release

The circuit breaker/MSPs can also be equipped with one of the following auxiliary releases:
- Shunt release
- Undervoltage release
- Undervoltage release with leading auxiliary contacts

Auxiliary contacts

The 3RV1 can use a transverse auxiliary contacts and/or a side mounted auxiliary contacts (Section 2.4 Accessories).

Shock protection

All frame sizes S00 to S3 are touch safe according to DIN VDE 0106 part 100. Additional protection covers are offered for frame sizes S2 and S3.
- Frame size S2, S3: terminal covers for box terminals
- Frame size S3: terminal covers for lug and bar connection

Other accessories

Other accessories for circuit breaker/MSPs:
- Alarm switch
- Disconnecting module
- Isolated 3-phase busbar system
- Busbar adapter
- Rotary switches
- Terminals for "Combination Motor Controller Type E" in acc. with UL 508
- Housing and front plates

2.2.2 Operation

Current setting

Using a screwdriver, set the load rated current (current setting) I_e on the scale of the 3RV1.
The proper dial setting will depend how the 3RV1 will be installed. There are two determining factors:
1. Stand-alone installation: without a directly mounted contactor and clearance left and right of a minimum 10 mm.
2. Side-by-side installation: with a directly mounted contactor and clearance left and right of less than 10 mm. This is the typical installation method.

Note the two possible dial markings on the dial:
- Dash mark: Is the dial marking used when the 3RV1 is being applied in stand-alone installation
- Triangle mark: Is the dial marking used when the 3RV1 is being applied in side-by-side installation

In both cases the ambient temperature may be +60 °C and the complete current range can be used up to the highest setting. The relevant dial marking (Dash or Triangle) should be set according to the required current setting. At temperatures over +60 °C current derating is necessary. The maximum allowable current setting for an ambient temperature of +70 °C can be determined by a slightly longer setting line on the current scale.

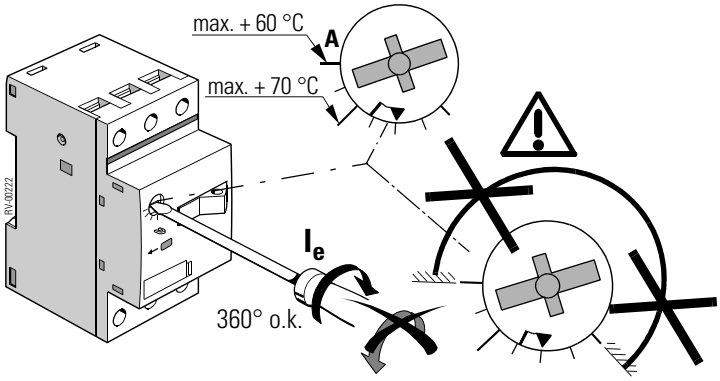

Fig. 2-2: Current adjustment I_e adjustment (example: frame size S00)

Warning
The adjusting knob can be turned 360° clockwise. You can only turn it counterclockwise within the adjustment range.
A setting over the marked current scale is not permitted

Sealing the adjustment scale

You can prevent unauthorized adjustment of the current setting by placing a transparent cover over it and sealing it.

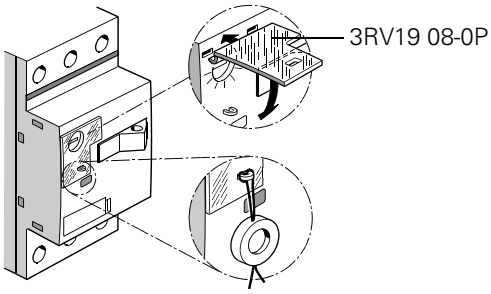

Fig. 2-3: Sealing the adjustment scale (example: frame size S00)

Switches

The state of the circuit breaker/MSP can be determined by the position of the switch:

Frame size	Switch	STOP	ON	Tripped
S00	Toggle switch	OFF	ON	OFF
S0, S2, S3	Rotary switch	OFF	ON	TRIPPED

Table 2-2: Contact position indicators of the circuit breaker/MSPs

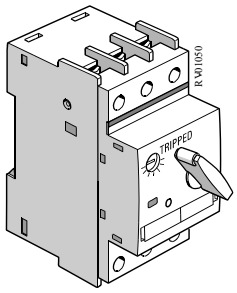

Fig. 2-4: Tripped position, 3RV (example: frame size S0)

Locking the circuit breaker/MSPs

You can prevent the circuit breaker/MSP from being switched on by unauthorized persons by securing the switching mechanism (toggle switch or rotary switch) with a padlock (shackle diameter 3.5 to 4.5 mm)
The device can only be locked in the Off position.

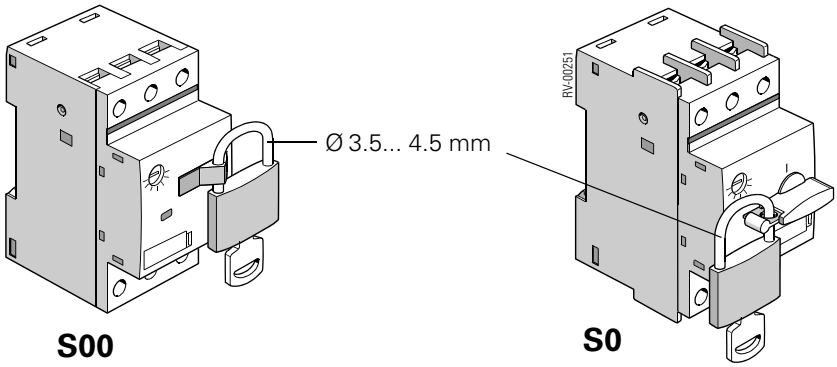

Fig. 2-5: Locking the toggle and rotary switch (example: frame size S00 and S0)

Resetting after a tripping operation

When the circuit breaker/MSP trips, the switch goes into the tripped position. You use the switch to close the circuit again.
In the case of frame sizes S0 to S3, the rotary switch must be manually turned to the OFF position after the device trips. Then the circuit breaker/MSP can be turned on again.
In the case of frame sizes S2 and S3, it is possible to switch on and off using a motorized remote-control mechanism (see Section 2.4, Accessories).

Testing overload tripping

The following table shows you how overload tripping of the circuit breaker/ MSP can be tested:

Drawing	Step	Procedure
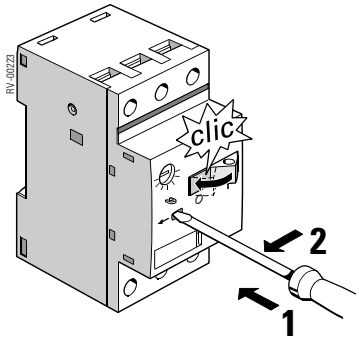	**1**	Switch the toggle switch/rotary switch from 0 to 1.
	2/3	Put a screwdriver in the test opening and push it to the left. Overload tripping is in working order when the toggle switch switches from 1 to 0 (frame size S00) or goes into the tripped position (frame sizes S0 to S3).

Table 2-3: Testing overload tripping (example: frame size S00)

2.2.3 Information on configuration

Short-circuit protection

The short-circuit releases of the 3RV1 circuit breaker/MSPs execute a three-phase isolation of the faulty branch circuit from the network and prevent any further damage.
With a short-circuit breaking capacity of 50 kA or 100 kA a voltage of 400 V AC, the switches are considered to be short circuit-proof, since higher short-circuit currents are not to be expected where the switches are installed.
Backup fuses are only required if the short-circuit current at the point of installation exceeds the rated short-circuit breaking capacity of the circuit breaker/MSPs.
You will find the short-circuit breaking capacity for other voltages and the sizing of any required fuse listed in Section 2.7, Technical specifications.

Conditions of application

3RV1 circuit breaker/MSPs are climate-proof. They are intended for use in closed areas where there are no hazardous operating conditions such as dust, corrosive fumes or destructive gases.
Appropriate housings are available as an accessory for use in dusty and damp areas (see Section 2.4).

Selection

Operational currents and starting currents can vary even in motors of the same power. The motor powers listed in the tables are to serve only as guide values. Most important when selecting the correct circuit breaker/ MSPs are the specific starting data and rating of the motor to be protected. This also applies to circuit breaker/MSPs used for transformer protection.

Phase loss sensitivity

The phase loss sensitivity of the circuit breaker/MSP ensures that it trips in the event of the loss of a phase and the resulting overcurrents in the other phases.
During normal operation, the device should have a three-pole load. To protect single-phase loads or direct current loads, all 3 main conducting paths should be switched in series

Explosion protection

Note
In the case of a three-pole load, at 3 to 8 times the set current, the release time deviates by a maximum of ± 20 % and therefore complies with the requirement of DIN VDE 0165 and EN 50019.
The 3RV10 circuit breakers (MSP) for motor protection, CLASS 10, and the 3RV11 circuit breakers for motor protection with overload relay function, CLASS 10, have ATEX-Approval according to EU-requirement 94/9/EG (DMT-Certificate).

Characteristics

The tripping characteristic of the inverse-time delayed overload release (thermal overload release, a-release) is valid for direct current and alternating current with frequencies of 0 to 400 Hz.

The characteristics are valid for tripping operations from a cold state. From a warm state, the release times can be reduced up to 75 % depending on the motor current and the ambient temperature.

The tripping characteristics of the instantaneous electromagnetic overcurrent releases (short-circuit release, n-release) is based on the rated current I_n, which in the circuit breaker/MSPs with adjustable overload releases is also the upper value of the adjustment range.
The following is a chart of the time-current characteristic:

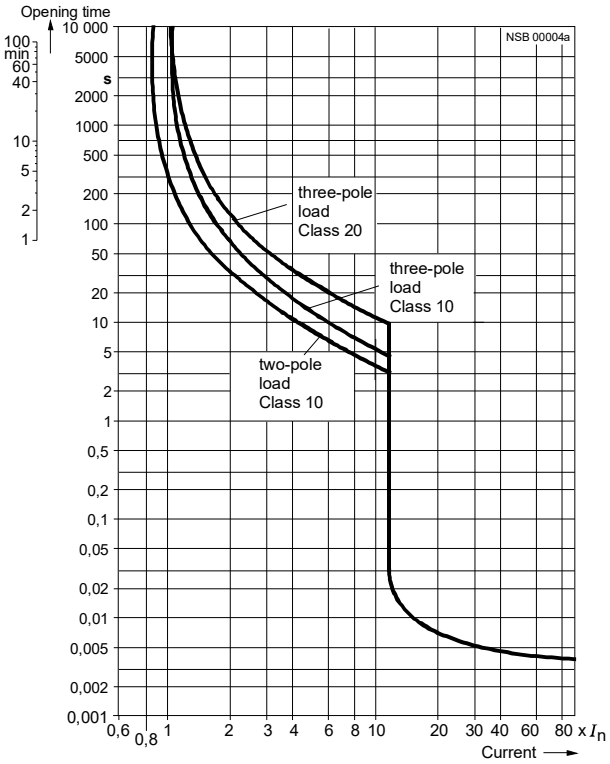

Fig. 2-6: Time-current characteristic, chart

Time-current characteristics, current-limiting characteristics and I^2t characteristics can be requested directly from your sales representative, if necessary.

Frequency sensitivity of the short-circuit releases

The characteristics of the short-circuit releases apply to frequencies of 50/60 Hz. For lower frequencies, such as 16 $^{2}/_{3}$ Hz, for higher frequencies up to 400 Hz, and for direct current, appropriate correction factors have to be taken into account.
The following characteristic curve illustrates the frequency sensitivity of the short-circuit releases:

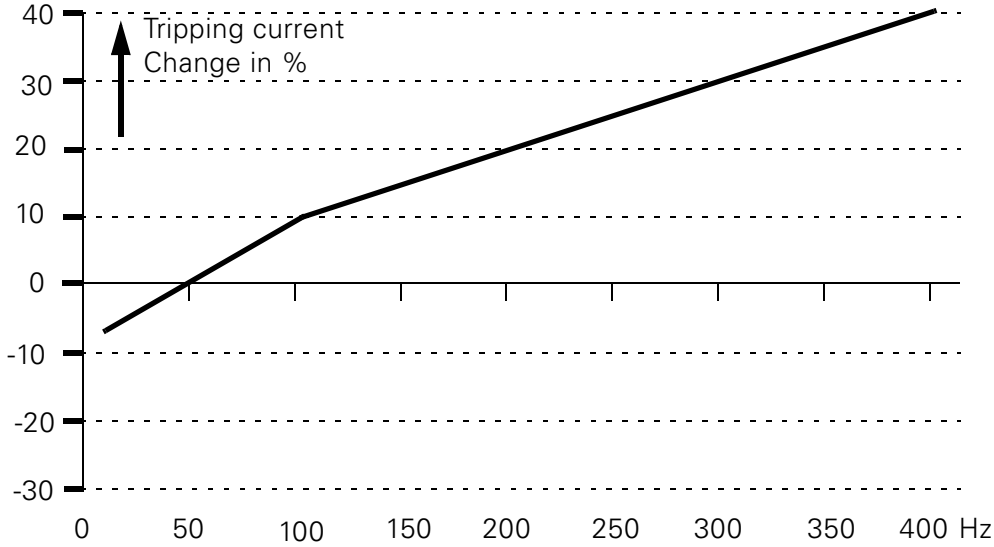

Fig. 2-7: Frequency sensitivity of the short-circuit releases

The increase in tripping current is approximately 40 % for DC voltage.

2.3 Application and areas of use

The tripping characteristics of the 3RV1 circuit breaker/MSPs are designed primarily to protect three-phase induction motors. The circuit breaker/MSPs are therefore also referred to as motor protecting switches. In Europe, the 3RV10 circuit breaker/MSPs for motor protection can also be used in the protection of systems.

2.3.1 Motor protection

Current setting

The current of the motor that is to be protected is set on the adjustment scale. This sets the integrated overload protection of the motor current. The short-circuit release is set at the factory to 13 times the value of the rated current (the highest value on the current scale) of the circuit breaker/MSP. This ensures problem-free startup and reliable protection of the motor.

Phase loss sensitivity

The phase loss sensitivity of the circuit breaker/MSP ensures that it trips in the event of the loss of a phase and the resulting overcurrents in the other phases.

CLASS10/CLASS20

Circuit breaker/MSPs of frame sizes S00 to S3 (0-100 A) with thermal overload releases comply with tripping class 10 (CLASS 10). Circuit breaker/MSPs with the CLASS 20 tripping characteristic are also available for frame sizes S2 and S3 (11-100 A) for longer startup conditions.

2.3.2 Transformer protection

Inrush current

In the case of primary protection of control transformers, the high inrush currents that occur when the transformers are switched on often result in the unwanted tripping of the protective devices.
Therefore, the 3RV14 circuit breaker/MSPs have overcurrent releases for the protection of transformers that are set at the factory to approximately 19 times the rated current. This makes it possible to protect transformers in which the inrush currents reach peak values of up to 30 times the rated current with circuit breaker/MSPs in the primary circuit. The 3RV14 for transformer protection come in frame sizes S0 and S2 (0 to 40 A).

In the case of control transformers with low inrush current (SIEMENS 4AM control transformers, for example), this is not required. 3RV10 circuit breaker/MSPs can be used. In these lower inrush applications the 3RV14 devices are not UL listed for the protection of transformers.

2.3.3 Starter protection

The 3RV13 starter protection switches are circuit breakers without overload releases. They are used together with a contactor and overload relay if the circuit breaker/MSP is not to be triggered in the case of overload tripping. Like the 3RV10 the short-circuit release is set at 13 times the rated current. The 3RV13 are available in frame sizes S0 to S3 (0 to 100 A).

2.3.4 Motor protection with overload relay function

3RV11 circuit breakers/MSPs with the overload relay function are available for frame sizes S0, S2, and S3.

Description

The 3RV11 devices have the same overload and short-circuit trip characteristics as the 3RV10. However the overload release doesn't effect the switching mechanism of the circuit breaker/MSP. In the event of an overload, the circuit breaker/MSP remains switched on.
The overload release uses two side mounted auxiliary contacts (1NO + 1NC), that switch in the event of an overload. The auxiliary contacts can be used for signalling or can be used to disconnect a downstream contactor. After the circuit breaker/MSP has cooled down, the auxiliary contacts are reset automatically.

Caution
In the overload range, the circuit breaker/MSP does not protect itself with the overload relay function. You must therefore ensure that the power is safely disconnected by means of a downstream switching device (e.g. a contactor).

Fixed link: auxiliary contacts with circuit breaker/MSP

Note
The auxiliary contacts are factory mounted to the 3RV11 circuit breaker/MSP on the right side and cannot be removed.

Diagrams

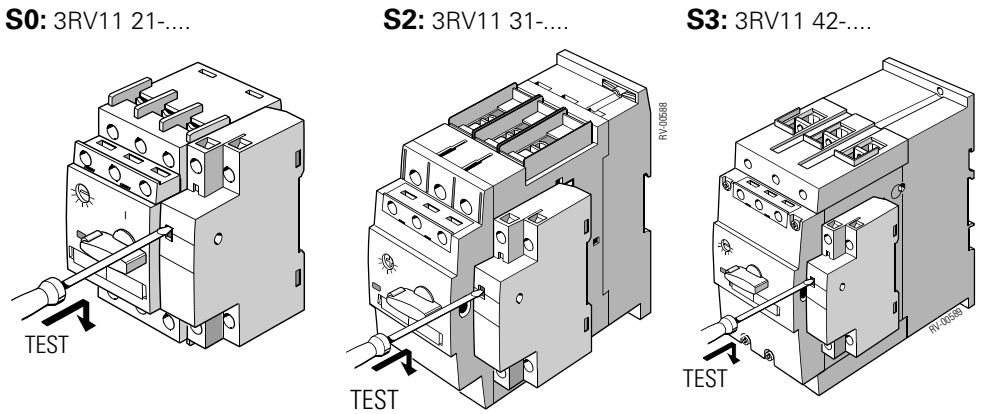

Fig. 2-8: Circuit breaker/MSP with overload relay function (frame sizes S0 to S3)

2.3.5 Switching direct current

The 3RV1 circuit breaker/MSPs for alternating current are suitable for switching direct current. However, you must note the maximum permissible DC voltage per conducting path. In the case of higher voltages, series connection of 2 or 3 conducting paths is required.

Response thresholds

The response thresholds of the overload releases remain unchanged. The response thresholds of the short-circuit releases are increased with direct current by approximately 40 %.
The following table lists suggestions for switching direct current:

Suggestion	Circuit breaker/ MSP	Frame size	Max. permissible direct voltage E_I	Meaning
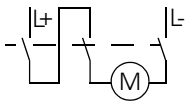	3RV1.	S00 to S3	150 V DC	2-pole switching Ungrounded system If a ground fault can be excluded, or if every ground fault is immediately corrected (ground-fault monitoring), the maximum permissible DC voltage can be tripled.
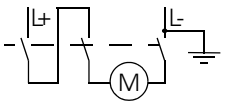	3RV1.	S00 to S3	300 V DC	2-pole switching Grounded system The grounded pole must always be assigned to the individual conducting path so that in the event of a ground fault there are always 2 conducting paths in series.
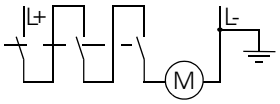	3RV1.	S00 to S3	450 V DC	1-pole switching Grounded system 3 conducting paths in series. The grounded pole should be assigned to the non switched conducting path.

Table 2-4: Suggestions for switching direct current

Double ground fault

Note
In the case of the circuit with 2-pole switching and an ungrounded system, it is assumed that even in the event of a double ground fault that bridges two contacts, safe disconnection still occurs.

2.3.6 Main and emergency stop switches

Since the circuit breaker/MSPs meet the requirements for disconnectors in acc. with IEC 60947-3 and the additional test requirements for circuit breaker/MSPs with disconnector features in acc. with IEC 60947-2, they can be used with the appropriate accessories as main and emergency stop switches. They must also comply with DIN VDE 0113.

2.4 Accessories

2.4.1 Attachable accessories: Overview

Auxiliary switches, alarm switches, auxiliary releases and other accessories can be easily attached to the circuit breaker/MSPs without tools, as required.

Accessories	Function/use	Width	Attach to
Transverse auxiliary switch	The contacts of the auxiliary switches close and open together with the main contacts of the circuit breaker/MSP. Variants: • 1 changeover contact • 1 NO + 1 NC contact • 2 NO contacts	Width of the circuit breaker/ MSP remains the same	Front
Electronically optimized transverse auxiliary switch	One transverse auxiliary switch can be attached for each circuit breaker/MSP: Variants: • 1 changeover contact		
Lateral auxiliary switch	One lateral auxiliary switch can be attached for each circuit breaker/MSP: • 1 NO + 1 NC contact • 2 NO contacts • 2 NC contacts • 2 NO + 2 NC contacts	9 mm 9 mm 9 mm 18 mm	Left side
Alarm switch for frame sizes S0, S2 and S3	One alarm switch can be attached at the side of the circuit breaker/MSPs with rotary switches. The alarm switch has two contact systems: • One contact system (1 NO + 1 NC) reports a general **tripping operation**, irrespective of whether it was caused by a short circuit, overload or auxiliary release. • The other contact system (1 NO + 1 NC) only switches in the event of a **short circuit** tripping operation. To reset the circuit breaker/MSP after a short circuit, the alarm switch must be reset manually after the cause of the error has been eliminated.	18 mm	
Shunt release	Remote release of the circuit breaker/MSP: • Via PLC: The coil of the release should be connected to the voltage only briefly. • Especially suitable for emergency stop disconnection by means of appropriate emergency stop switches in acc. with DIN VDE 0113.	18 mm	Right side Accessories cannot be attached on the right of a circuit breaker/ MSP with a relay function (3RV11).
Undervoltage release	Trips the circuit breaker/MSP in the event of a voltage interruption (e.g. when the power plug is removed) and prevents the motor starting up inadvertently when the voltage returns.		
Undervoltage release with leading auxiliary contacts 2 NO	Function and use, see undervoltage release. Additional function: The auxiliary contacts isolate the undervoltage release from the power system on both sides in the event of breaking or a tripping operation and thus prevent voltage distortion to the control circuit when the switch is in the off position. It is possible to reset the circuit breaker/MSP because the contacts reset.		

Table 2-5: Attachable accessories

Accesso-ries	Function/use	Width	Attach to
Disconnect-ing module for frame sizes S0 and S2	The supply is fed to the circuit breaker/MSP via the disconnecting module. A connector which can only be removed when the circuit breaker/MSP is switched off isolates the circuit breaker/MSP from the power system on 3 poles. The shock-protected isolation position is easily visible and is secured by a pad-lock to ensure that the connector cannot be used during maintenance work, for example.	Width of the circuit breaker/ MSP remains the same	Upper side/ line side
Motorized remote-con-trol mecha-nism for frame sizes S2 and S3	The circuit breaker/MSPs can be opened and closed via the remote-controlled mechanism by means of electrical commands. This enables a load or system to be disconnected from and then reconnected to the power system from an operator control panel. The circuit breaker/MSP can be locally disconnected from and reconnected to the remote-control mechanism.	148 mm	—
Rotary switch extension for the door	The rotary switch extension for the door consists of a knob, a drive coupling and an extension shaft. They comply with IP65. The door interlock prevents the enclosure door being opened inadvertently when the switch is in the on position. The off position can be secured with a maximum of 3 padlocks.	Depends on the application	Front mount

Table 2-5: (cont.) Attachable accessories

2.4.2 Auxiliary contacts 3RV19 01-.., alarm switch 3RV19 21-111 and auxiliary release 3RV19 .2-....

The maximum configuration for each 3RV1 circuit breaker/MSP is one transverse auxiliary contact, one side mounted auxiliary contact with 2 contacts, one alarm switch, and one auxiliary release. An alternative to the transverse auxiliary contacts and one side mounted auxiliary contact with 2 contacts would be to use a side mounted auxiliary contact with 2 NO + 2 NC. So with any one circuit breaker/MSP a maximum of 4 auxiliary contacts with auxiliary release can be used.

Possible combinations

The following combinations of auxiliary switches and alarm switches or of auxiliary switches are possible:

- Auxiliary contacts with 2 contacts and alarm switches can be installed individually or together. The side-mounted auxiliary contact is installed on the left of the alarm switch.
- Transverse and lateral auxiliary switches can be combined. Maximum of 4 auxiliary contacts is possible.
- One auxiliary release can be attached on the right for each circuit breaker/ MSP

Mounting the auxiliary contacts

The auxiliary switches, alarm switches, and auxiliary releases are mounted in the same way for all frame sizes:

Transverse auxiliary contacts (3RV19 01-1D, -1E, -1F, -1G, -2E)

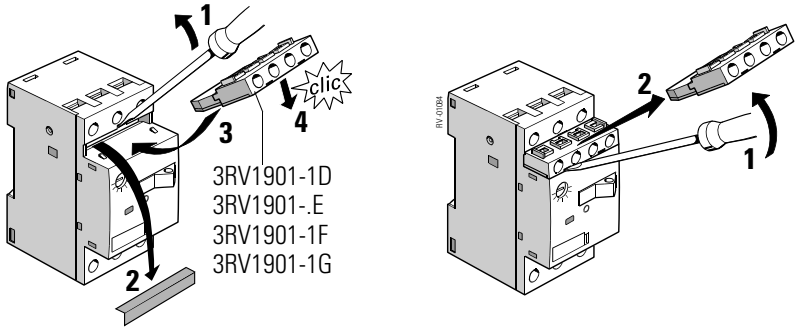

Fig. 2-9: Mounting the transverse auxiliary switch (frame size S00)

Side-mounted auxiliary contacts (3RV19 01-..)
Undervoltage release (3RV19 .2-....)

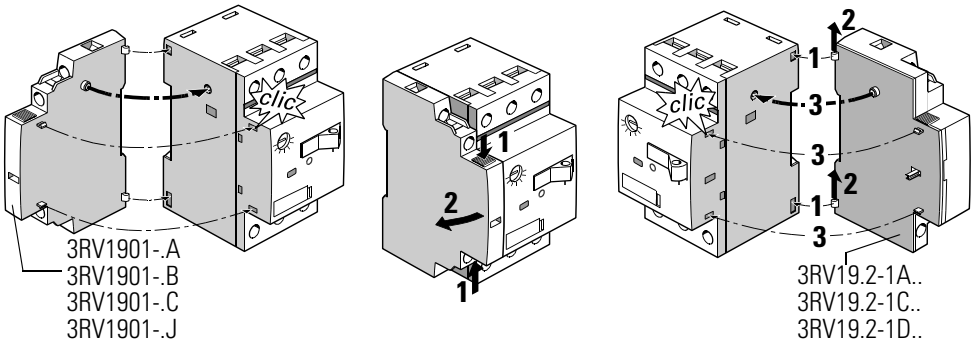

Fig. 2-10: Mounting/removing the side mount auxiliary contacts/undervoltage release (example: frame size S00)

Voltage ranges of the auxiliary releases

One undervoltage release or shunt release can be installed for each circuit breaker/MSP. The following voltage ranges are possible:

Auxiliary release	**Frequency**	
Undervoltage release	**DC**	
	24 V	
	AC 50 Hz	**AC 60 Hz**
	24 V	—
	110 V	120 V
	—	208 V
	230 V	240 V
	400 V	—
	415 V	480 V
	500 V	—
Undervoltage release with leading auxiliary contacts 2NO	230 V	240 V
	400 V	—
	415 V	480 V
Shunt release	**AC 50/60 Hz 100 % ED 1)**	**AC 50/60 Hz; DC 5 sec.. ED 2)**
	20 – 24 V	20 – 70 V
	90 – 110 V	70 – 190 V
	200 – 240 V	190 – 330 V
	350 – 415 V	330 – 500 V
	500 V	500 V

Table 2-6: Voltage ranges of the auxiliary releases

1) Transformer operational voltage of the lower mark of the voltage range at 0.85 (Tu = 60 °C) is valid for 100 % (continuous) duty cycle only at AC 50/60 Hz

2) Transformer operational voltage of the lower mark of the voltage range at 0.9 (Tu = 60 °C) is valid for 5 seconds duty cycle at AC 50/60 Hz and DC

Mounting the alarm switch

The following table explains how the 3RV19 21-1M alarm switch is mounted onto the circuit breaker/MSP (frame sizes S0, S2 and S3):

Drawing	Step	Procedure
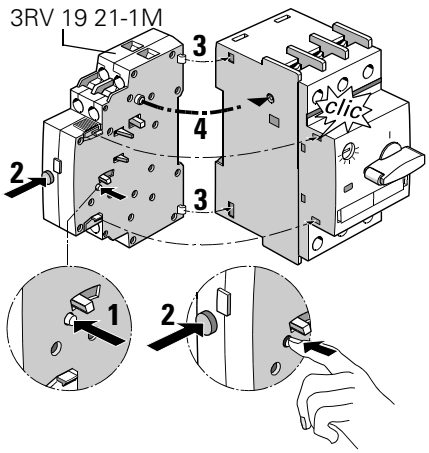	1	Press and hold down the transport safety button on the inside of the alarm switch.
	2	Then press the blue RESET button on the front of the alarm switch.
	3	Hook the alarm switch onto the circuit breaker/MSP.
	4	Move the alarm switch towards the circuit breaker/MSP until you hear it click into place.

Table 2-7: Testing overload tripping (example: frame size S0)

Alarm switch (signalling switch) signals

The alarm switch has two signals:

- Tripped (short-circuit, overload or tripping through a shunt trip)
- Short circuit signal (short circuit only)

The following table lists the signals, the status of the alarm switch, and the procedure required:

Drawing	Status	Procedure
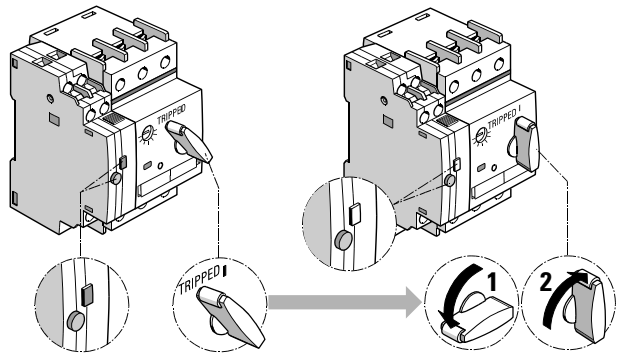	**Tripped signal** Circuit breaker/MSP is in the tripped position Alarm switch: LED is Red RESET button (blue): remains depressed	Switch off (Off position) and then switch on again (On position of the circuit breaker/ MSP)
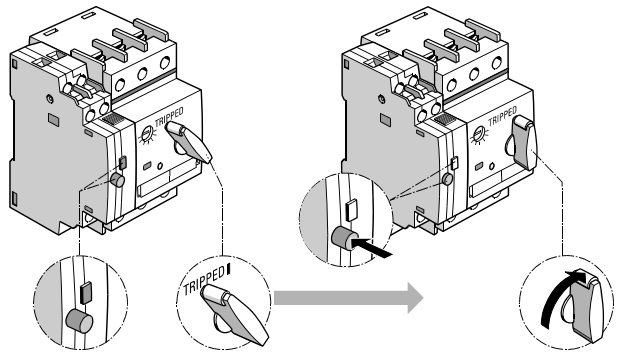	**Short circuit** Circuit breaker/MSP is in the tripped position Alarm switch: LED is Red RESET button (blue): pushed out	Push in the RESET-button (blue) on the Alarm switch then switch the circuit breaker/MSP off (Off position) and then switch it back on again (On position of the circuit breaker/MSP)

Table 2-8: Alarm switch with tripped signal and short circuit signal

2.4.3 Motorized remote-control mechanism 3RV19 .6-....

The motorized remote-control mechanism is available for 230 V AC, 50/60 Hz and 24 V DC

- Frame size S2: I_{nmax} = 50 A
- Frame size S3: I_{nmax} = 100 A

Mounting and connection

The following table shows you how to mount and connect the motorized remote-control mechanism:

Drawing	Step	Procedure
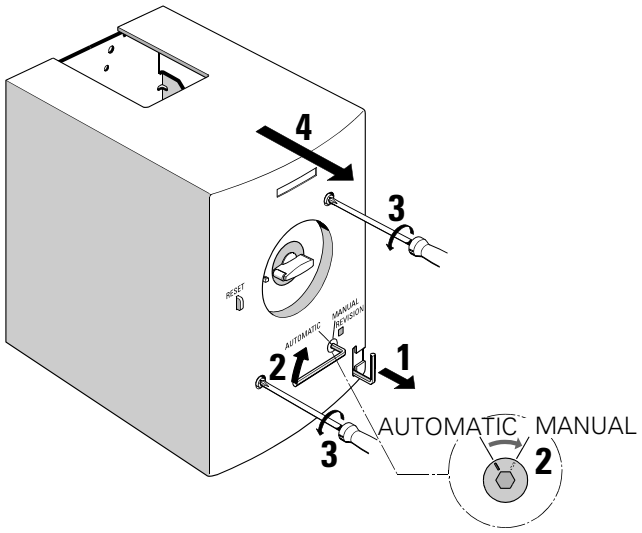	**1**	Remove the Allen key from the cover of the motorized remote-control mechanism.
	2	Use the Allen key to change the selector switch to "Manual".
	3/4	Undo the 2 screws and remove the cover.
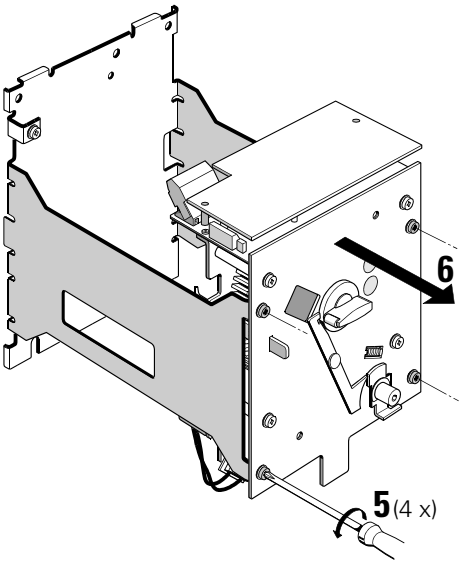	**5/6**	Undo the 4 screws on the remote-controlled mechanism, and remove it. (Pozidriv 2).

Table 2-9: Mounting the remote-control mechanism (example: frame size S2)

Drawing	Step	Procedure
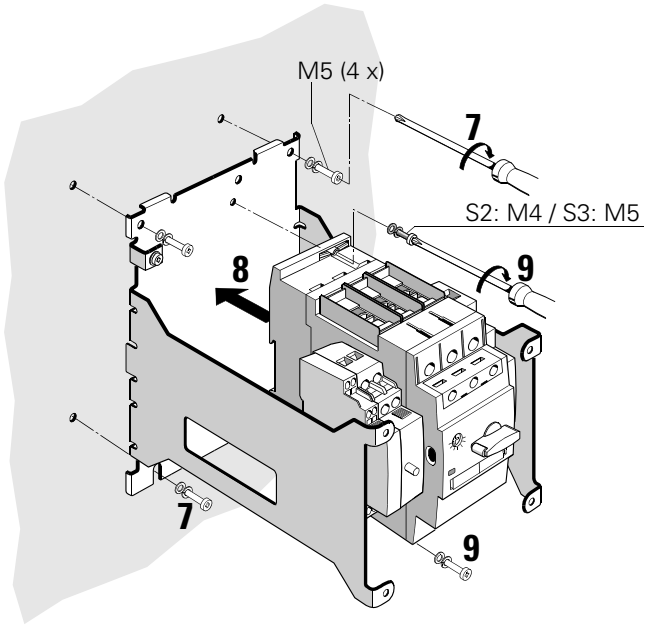	**7**	Screw the frame onto the mounting surface using 4 screws M4 (Frame size S2), M5 (Frame size S3)
	8/9	Attach the circuit breaker/MSP using 2 screws. **Attention:** Use screws 14 mm in length.
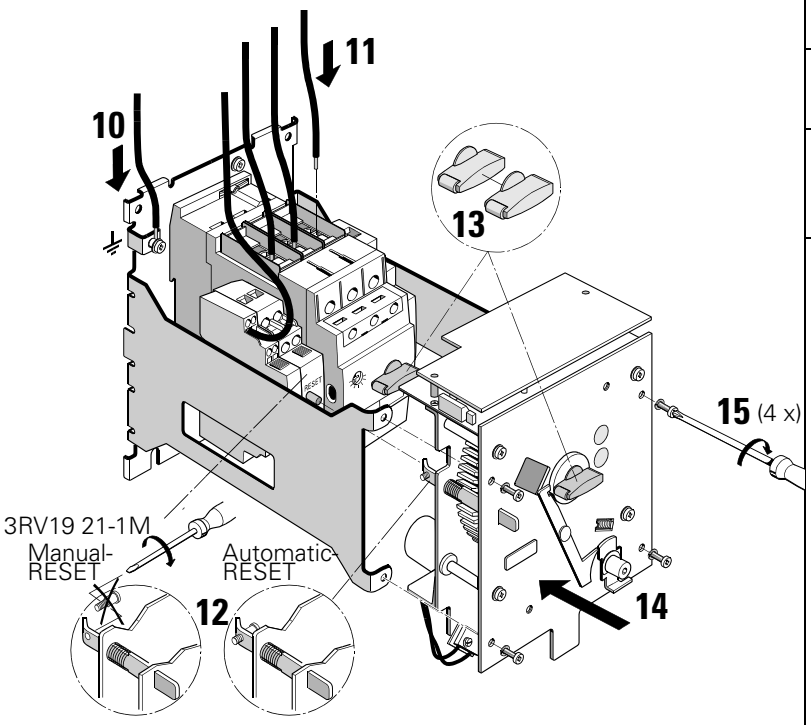	**10**	Attach the ground wire.
	11	Connect the main and control wires to the circuit breaker/MSP.
	12	If desired, set MANUAL RESET: Remove the screw from the RESET lever.
	13-15	Put the remote-control mechanism module into place, making sure that the driver covers the knob on the circuit breaker/MSP, and screw it on.

Table 2-9: (cont.) Mounting the remote-control mechanism (example: frame size S2)

Drawing	Step	Procedure
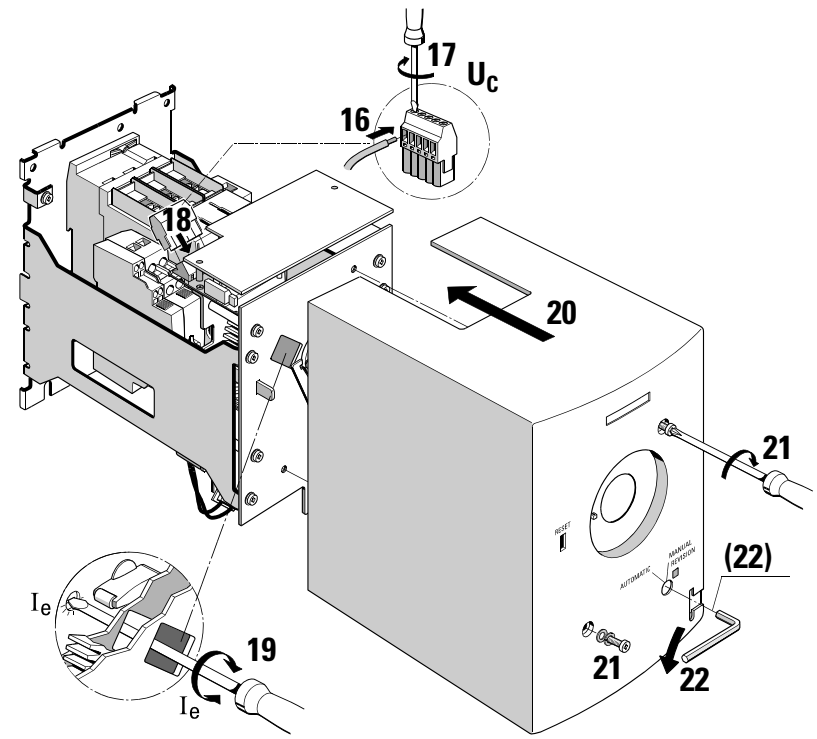	**16-18**	Screw the control wires for the remote-control mechanism onto the connector, and insert it.
	19	Set the current.
	20/21	Put the cover on, and screw it tightly.
	22	Use the Allen key to switch to AUTOMATIC and replace the Allen key in the cover.

Table 2-9: (cont.) Mounting the remote-control mechanism (example: frame size S2)

Warning
Do **not** set the "Automatic" position or operate the remote-control mechanism when open! There is a risk of injury!

Manual RESET

Remove the screw from the RESET lever (step **12**)

2.4.4 Disconnecting/isolator module 3RV19 .8-1A

The disconnecting/isolator module is suitable for creating a visible isolating distance. The isolating connector can only be removed in a deenergized state. The isolating distance can be secured with padlocks when open. Disconnecting modules are available for the circuit breakers/MSPs of frame sizes S0 and S2.

Mounting sequence for the disconnecting/ isolator module and Transverse auxiliary contacts

Attention
The disconnecting/isolator module covers the terminal screws of the transverse auxiliary switch. We therefore recommend that you use the lateral auxiliary switches or that you only install the disconnecting module once the transverse auxiliary switch has been wired.

Mounting

The modules are mounted in the same way for frame sizes S0 and S2.
The following diagrams show you how to mount the disconnecting module.
Example shown for frame size S0 (3RV1928-1A):

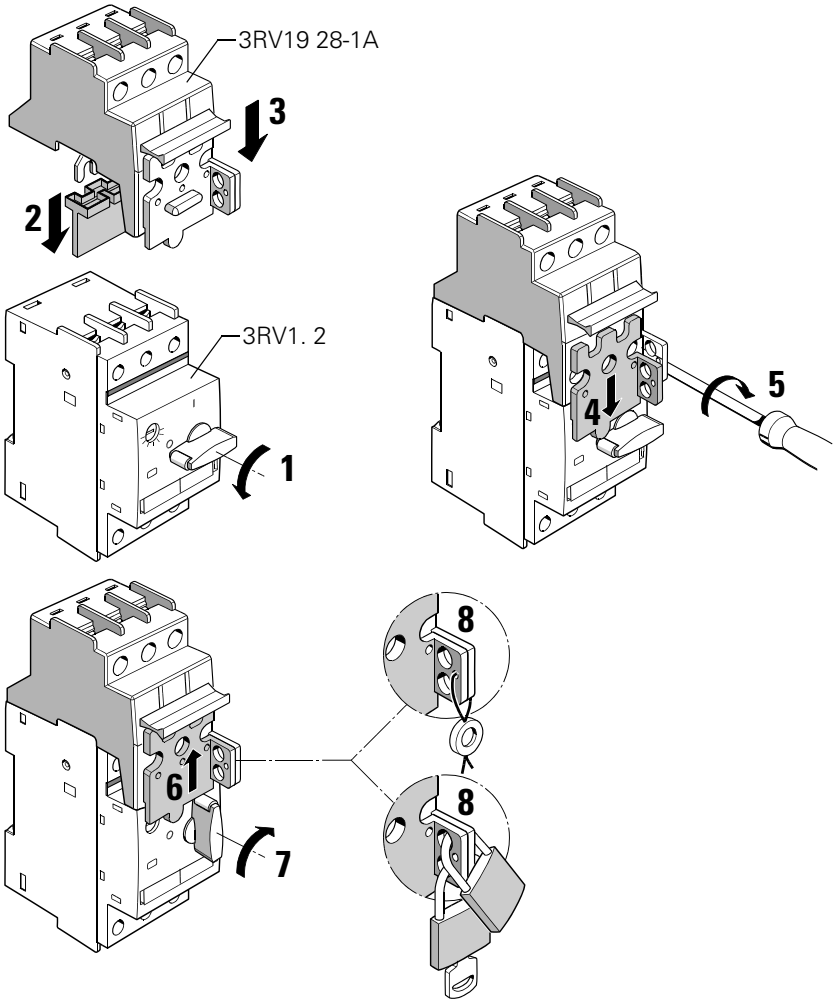

Fig. 2-11: Mounting the disconnecting module (example: frame size S0)

Disconnecting and locking

The disconnecting/isolator module can be locked and sealed or secured with two padlocks if the connector is removed during maintenance work, for example. The disconnecting/isolator module for frame size S0 (3RV19 28-1A) can use a padlock with a max. locking arm diameter of 6 mm, for frame size S2 (3RV19 38-1A) a padlock with a max. locking arm diameter of 9 mm can be used. The circuit breaker/MSP itself can also be secured with a third padlock.

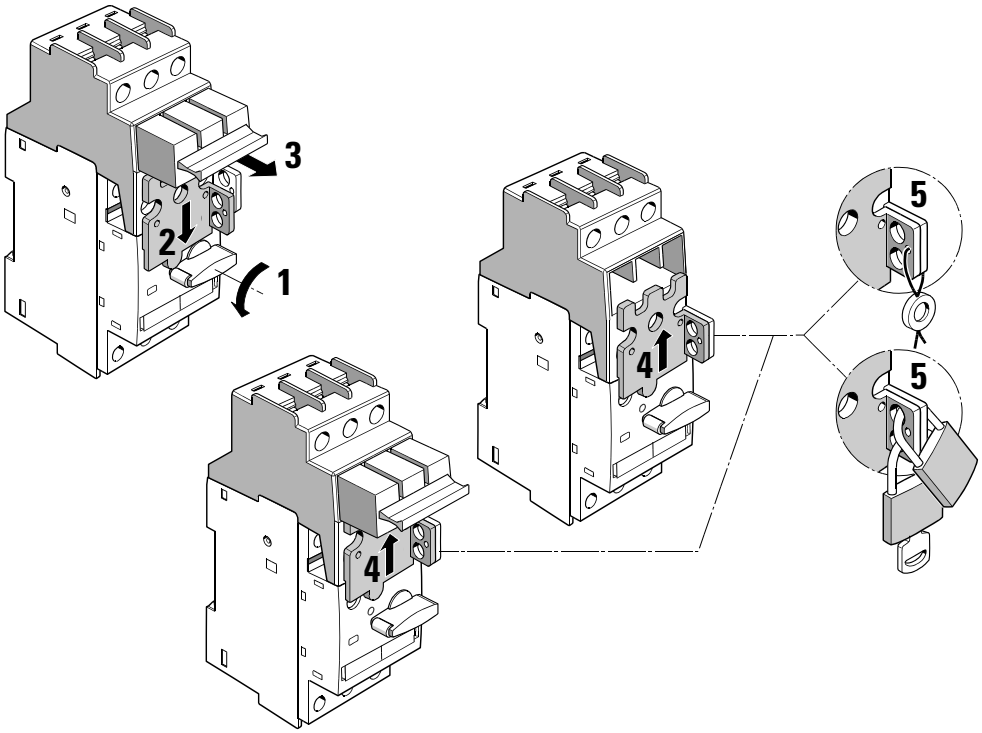

Fig. 2-12: Locking the disconnecting module (example: frame size S0)

Terminal cover (frame size S2)

A terminal cover (3RT1936-4EA2) is available for the disconnecting module in frame size S2 (3RV1938-1A) that protects the contacts from dirt and provides additional shock protection.

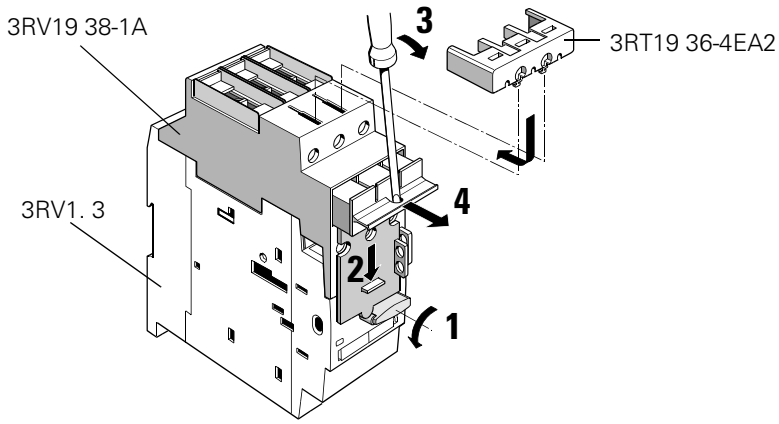

Fig. 2-13: Locking the disconnecting module and mounting the cover (frame size S2)

2.4.5 Thru-the door rotary operators 3RV19 .6-..

Thru-the-door rotary operators are available for frame sizes S0, S2, and S3. They consist of a lockable rotary handle with a detachable door coupling, an extension shaft, and a connector for the switch drive.
There are two basic designs available. The thru-the-door rotary operator 3RV19 26-0. for standard applications and the thru-the-door rotary operator 3RV19 .6-2. for harsh conditions. Both designs have an IP65 rating and can be locked in the OFF-position with up to three padlocks.
Both operators are available with either black/grey and/or red/yellow for emergency-stop handle styles.
The thru-the-door rotary operator for harsh conditions also meet the disconnection requirements according to IEC 60 947-2.

Thru-the door rotary operator 3RV19 26-0.

Mounting

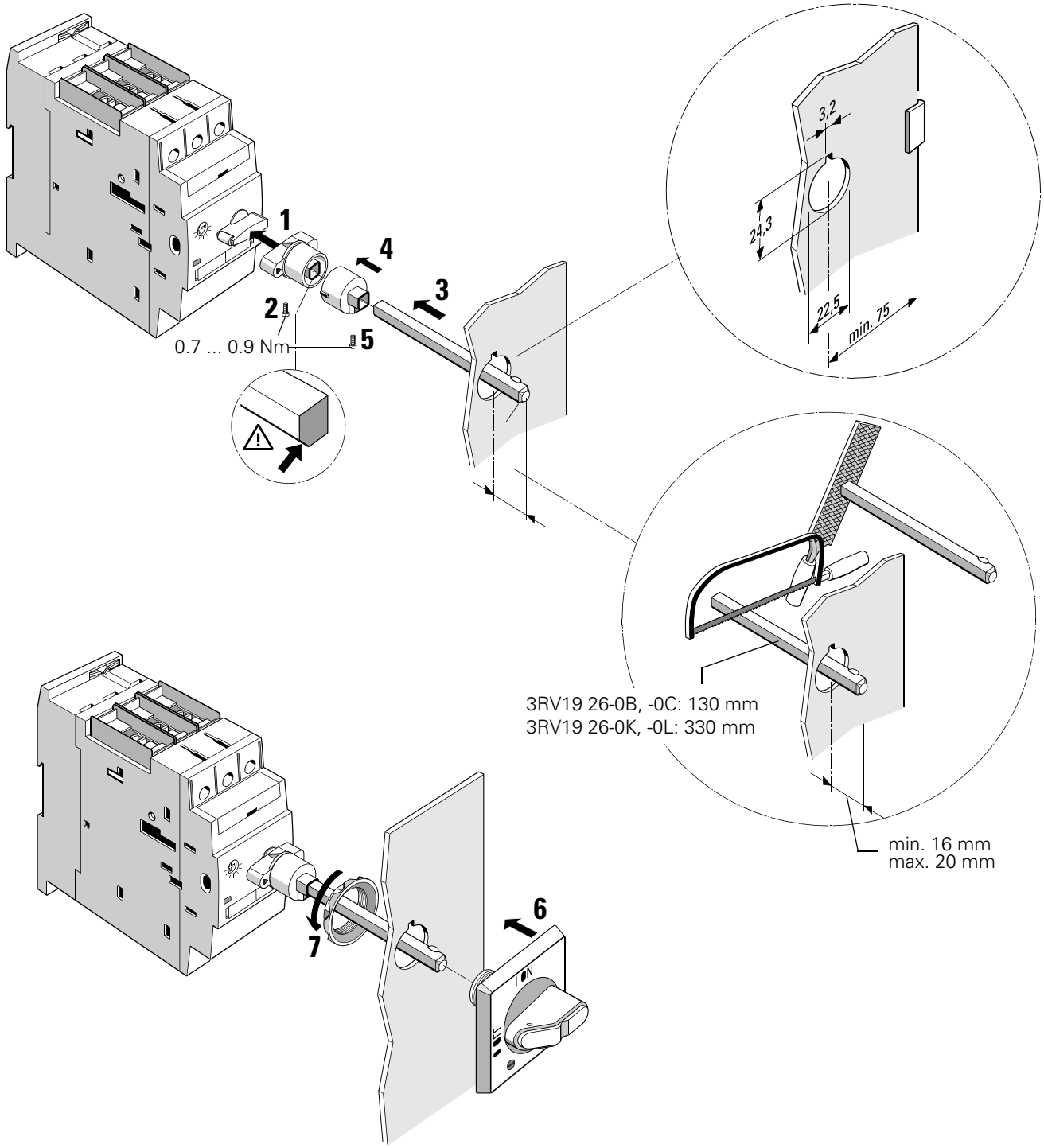

Fig. 2-14: Mounting the thru-the-door rotary operator 3RV19 26-0. (example: frame size S2)

Opening the door

The following table shows you how the cubicle door can be opened using the thru-the-door rotary operator:

Drawing	Procedure
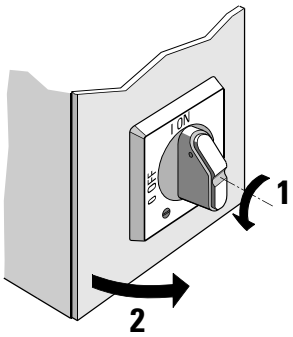	To open the cubicle door, set the circuit breaker/MSP to O (OFF). This releases the extension shaft from the rotary switch and allows the door to be opened.
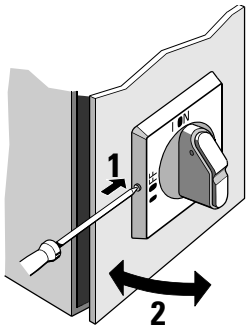	If you want to open the enclosure door during operation, you can override the procedure by pressing the button at the side of the rotary knob (step **1**). To close it during operation, press the button again so that the extension shaft snaps into place again.

Table 2-10: Opening a enclosure door using the thru-the-door rotary operator

Opening the door with great force

Note
If the circuit breaker/MSP is in the ON position and the door is opened with a force >150 N to 200 N, the cap of the extension shaft is separated from the rotary switch of the circuit breaker/MSP to prevent the circuit breaker/MSP being destroyed.
The circuit breaker/MSP remains in the ON position.

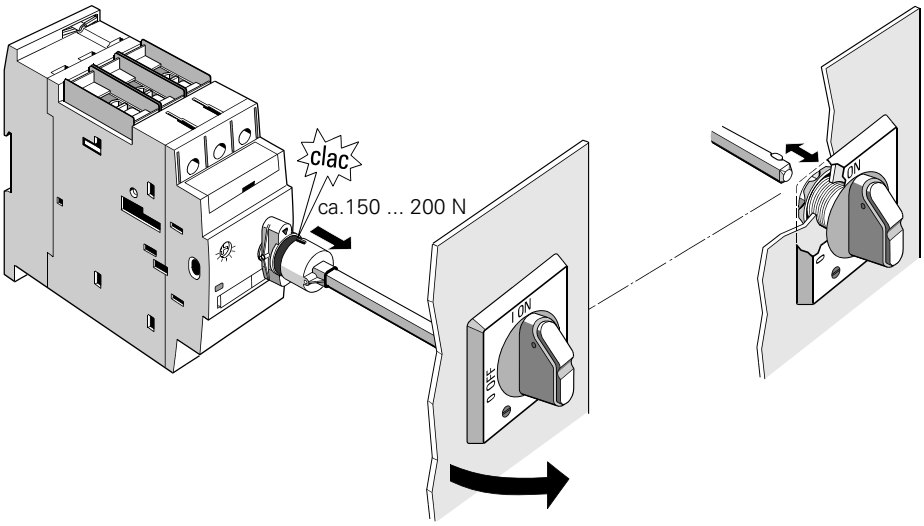

Fig. 2-15: Operation note: Thru-the-door rotary operator 3RV19 26-0.

The extension shaft must then be remounted on the circuit breaker/MSP and the rotary switch extension for the door as follows:

Drawing	Step	Procedure
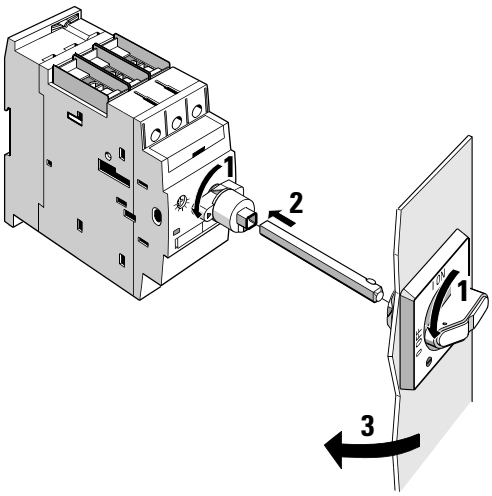	1	Switch the circuit breaker off, and turn the rotary switch on the door to OFF.
	2	Put the cap of the extension shaft on the rotary switch of the circuit breaker/MSP, and put the extension shaft in the cap.
	3	Close the enclosure door.

Table 2-11: Mounting the extension shaft

Locking

When the rotary switch is in the OFF position, it can be secured with up to 3 padlocks (e.g. during maintenance work on the system).

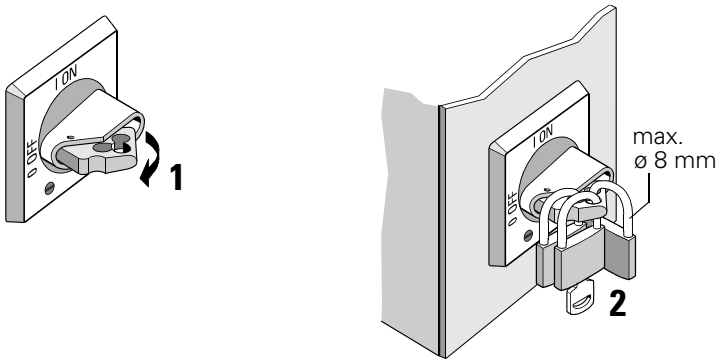

Fig. 2-16: Locking the thru-the-door rotary operator

Thru-the door rotary operator for harsh conditions 3RV19 .6-2. Mounting

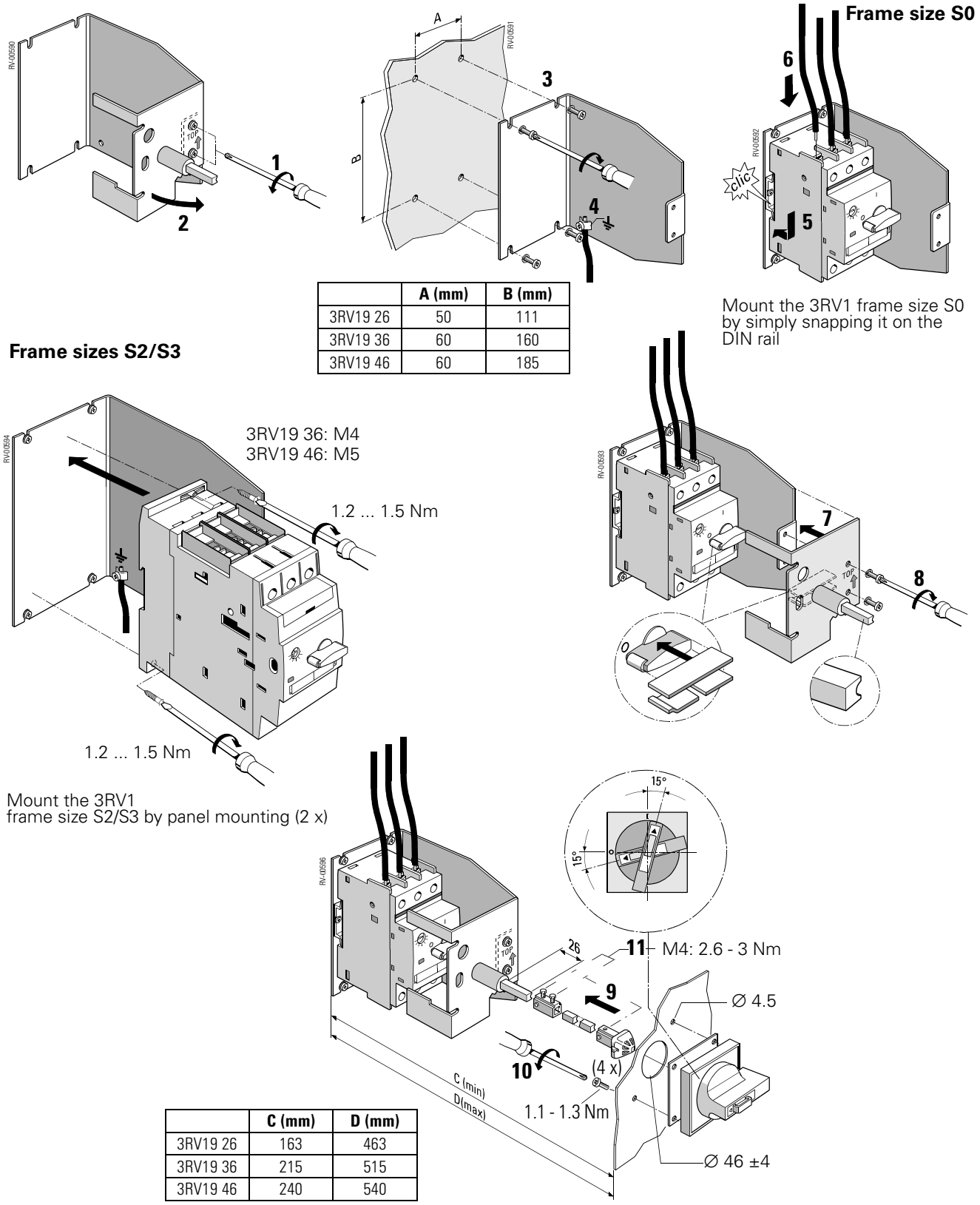

	A (mm)	B (mm)
3RV19 26	50	111
3RV19 36	60	160
3RV19 46	60	185

	C (mm)	D (mm)
3RV19 26	163	463
3RV19 36	215	515
3RV19 46	240	540

Fig. 2-17: Mounting the thru-the-door rotary operator 3RV19 .6-2. (example: frame sizes S0 and S2)

Opening the door

In order to open the enclosure door, turn the handle in the Off position. The extension shaft disengages from the handle in this position and the door can be opened.

Opening the door with great force

Note
When the circuit breaker/MSP is in the On position ("I"-position) and the door is opened with a force of ≥ 800 Nm, the operator can be destroyed. In this case the circuit breaker/MSP remains turned on. Anything under a force of 800 Nm, the operator will remain locked to the door.

Locking

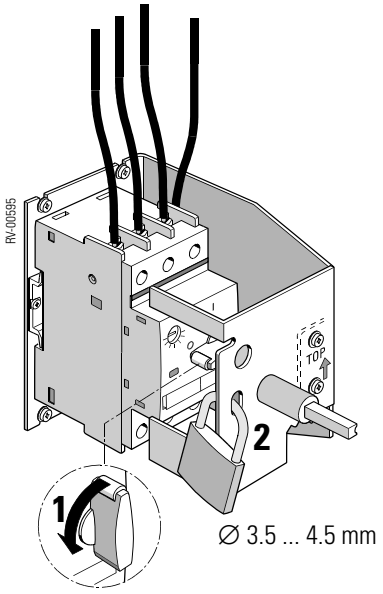

Fig. 2-18: Locking the thru-the-door rotary operator (example: frame size S0)

The operator handle can be padlocked inside the enclosure. To do this the circuit breaker/MSP must be in the Off position.

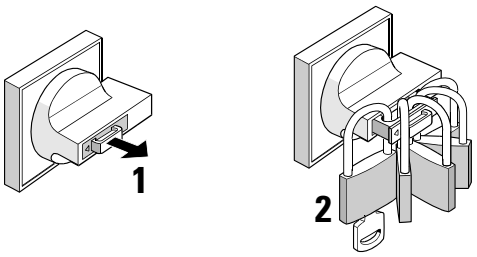

Fig. 2-19: Locking the thru-the-door rotary operator outside the enclosure

The operator can also be locked from outside the enclosure on the rotary handle.
To do this the circuit breaker/MSP must first be in the Off position. Then pull out the retractable locking device that is built in the handle. This locking device can hold up to five padlocks with a maximum locking arm diameter of 6 mm or three padlocks with a maximum locking arm diameter of 8.5 mm.

2.4.6 Terminals for "Combination Motor Controller Type E" in acc. with UL 508

Since July 16, 2001, 1 inch air clearance and 2 inch creepage distance is required for "Combination Motor Controller Type E" on the input side in acc. with UL 508. For the 3RV10 circuit breakers/MSPs frame size S0 use terminal block 3RV1928-1H and for frame sizes S3 use terminal block 3RT1946-4GA07. The 3RV10 in frame size S2 complies with the required air clearance and creepage distance without a terminal block.
These terminal blocks cannot be used in the S0 frame size at the same time as the 3RV19.5 3-phase busbars or in the S3 frame size at the same time as a transverse auxiliary switch.

Attention
Terminal blocks are not required for use in acc. with CSA.

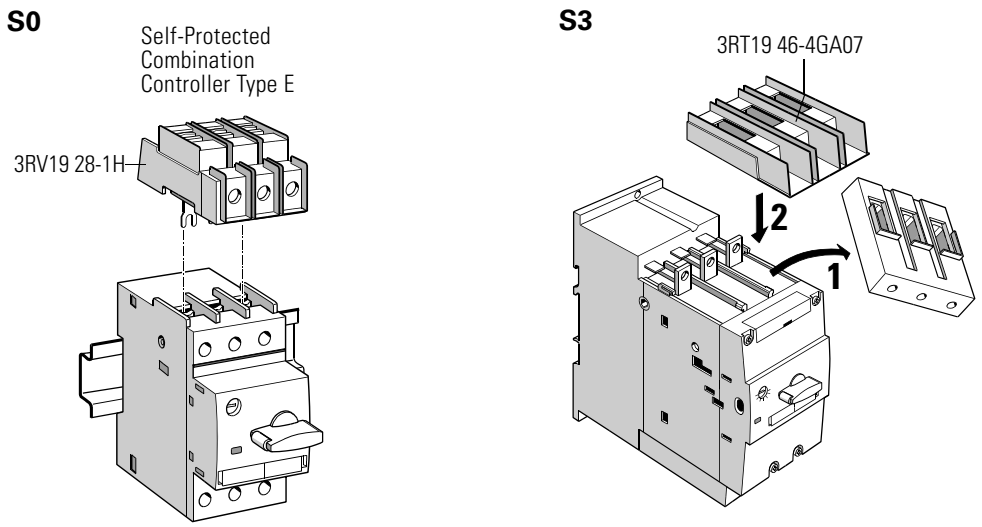

Fig. 2-20: Terminals for "Combination Motor Controller Type E"

2.4.7 Enclosures and mounting accessories

Molded-plastic enclosures (IP55) are available if you want to install circuit breakers/MSPs as single units. All the enclosures are equipped with neutral and ground terminals. Above and below are two openings that can be knocked out for cable glands. On the back of the enclosure there are 2 precut openings. All the cable bushings have metric dimensions. The surface casings can be sealed. There is space in the enclosure on the rail for additional modular terminal blocks.

Model	Molded-plastic...	Width	Frame size
Enclosure with actuator membrane for toggle switch	Surface mount	54 mm, 72 mm	S00
	Flush mount	72 mm	S00
Lockable enclosure with rotary switch	Surface mount	54 mm, 72 mm 82 mm	S0 S2
	Flush mount	72 mm	S0
Lockable enclosure with emergency stop rotary switch (red/yellow)	Surface mount	54 mm, 72 mm 82 mm	S0 S2
	Flush mount	72 mm	S0

Table 2-12: Enclosures for 3RV1 circuit breakers/MSPs

Widths

The widths of the enclosures depend on whether auxiliary releases are used:
- 54 mm: circuit breaker/MSP + side-mount auxiliary contact
- 72 mm/82 mm: circuit breaker/MSP + side-mount auxiliary contact+ auxiliary release

Mounting the surface mount enclosure

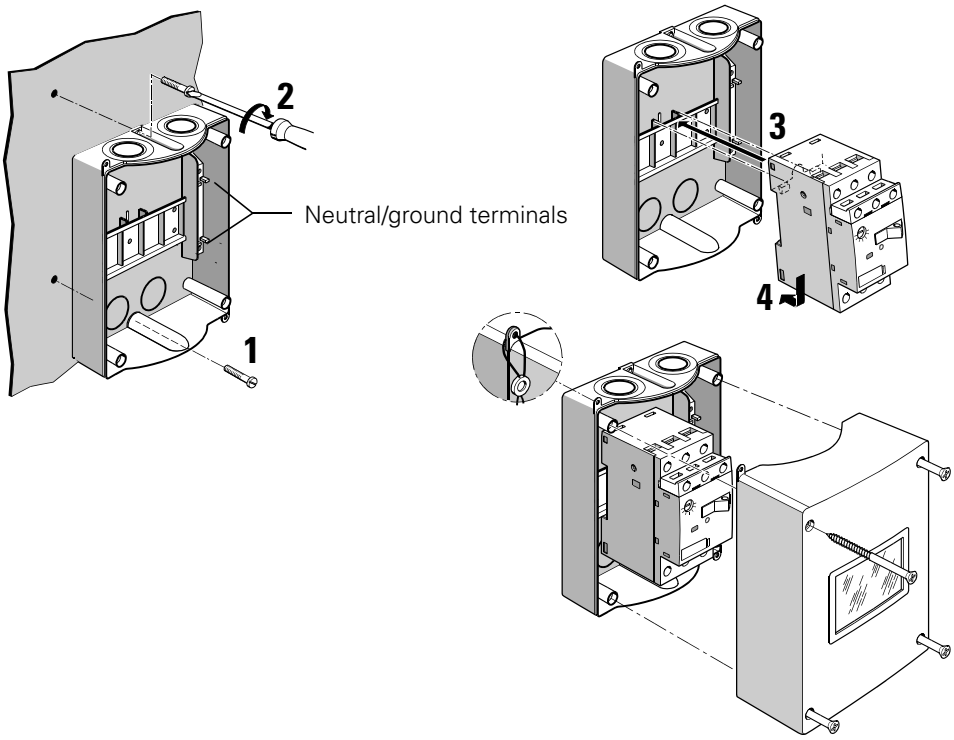

Fig. 2-21: Molded-plastic surface mount enclosure (example: frame size S00)

Mounting the flush mount enclosure

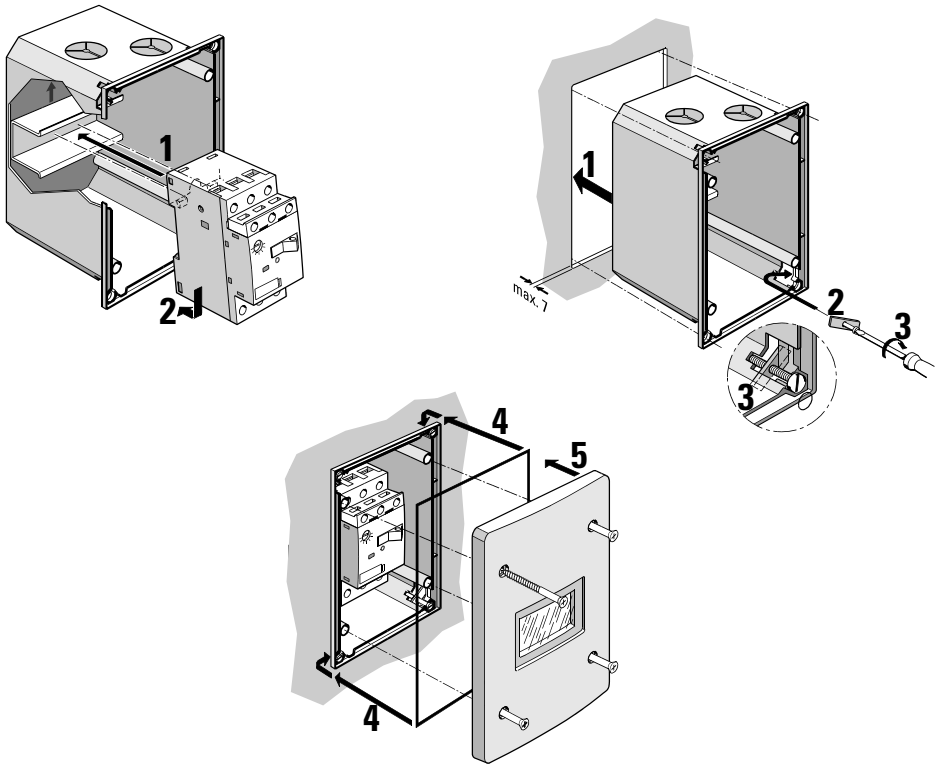

Fig. 2-22: Molded plastic flush mount enclosure (example: frame size S00)

Front plates

Molded-plastic-front plates with IP55 degree of protection are suitable for any housing:

Front plates and accessories	Model	Frame size
Front plates	With actuator membrane and support for switch	S00
	With lockable rotary switch	S0, S2, S3
	With lockable emergency-stop rotary switch (red/yellow)	S0, S2, S3
Accessories	Support for front plate	S0

Table 2-13: Front plates for any housings

Mounting the front plates

Frame size S00

3RV19 13-4C

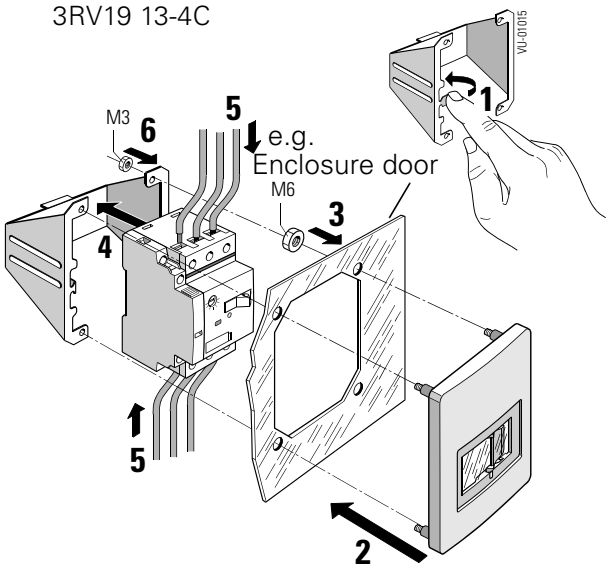

3RV19 13-4B

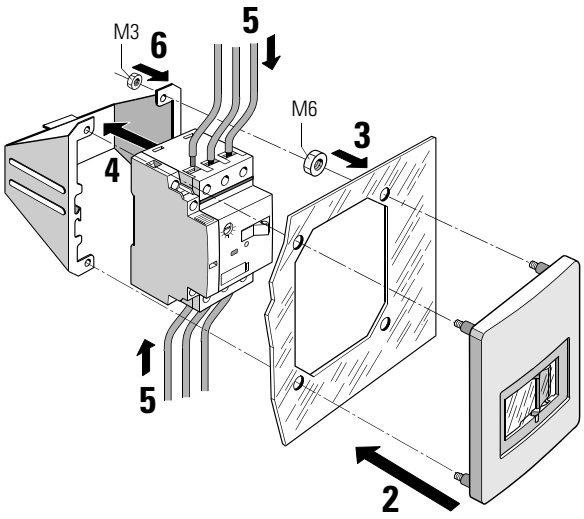

Fig. 2-23: Mounting the front plate (example: frame size S00)

Frame sizes S0, S2, S3

3RV19 23-4. + 3RV19 23-4G (only for frame size S0)

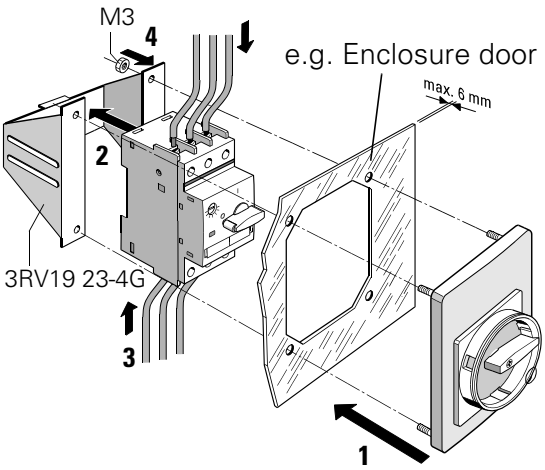

3RV19 23-4.

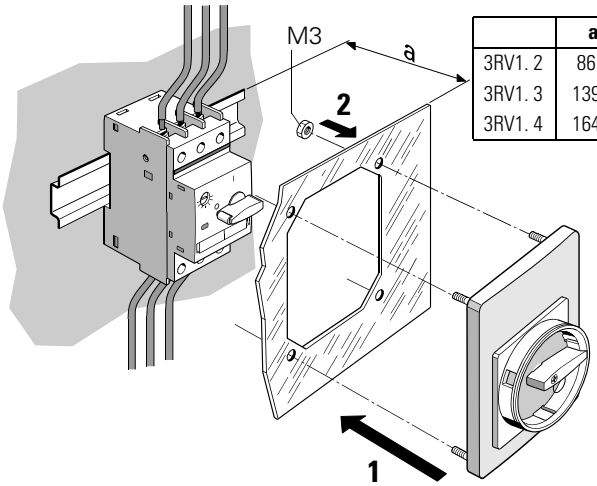

	a
3RV1. 2	86.5
3RV1. 3	139.0
3RV1. 4	164.5

Fig. 2-24: Mounting the front plate (example: frame size S0)

Accessories for the housings and front plates

The following accessories are available for the housings and front plates of the circuit breakers/MSPs:

- Replacement actuator membrane 3RV19 13-7F (for frame size S00)
- Locking device for 3 padlocks 3RV19 13-6B (for frame size S00)
- Emergency-stop button (red/yellow) 3RV19 13-7D (for frame size S00)
- Emergency-stop button (red/yellow) with safety lock 3RV19 13-7E (for frame size S00)
- Indicator lights 3RV19 03-5. (for frame sizes S00, S0, S2)

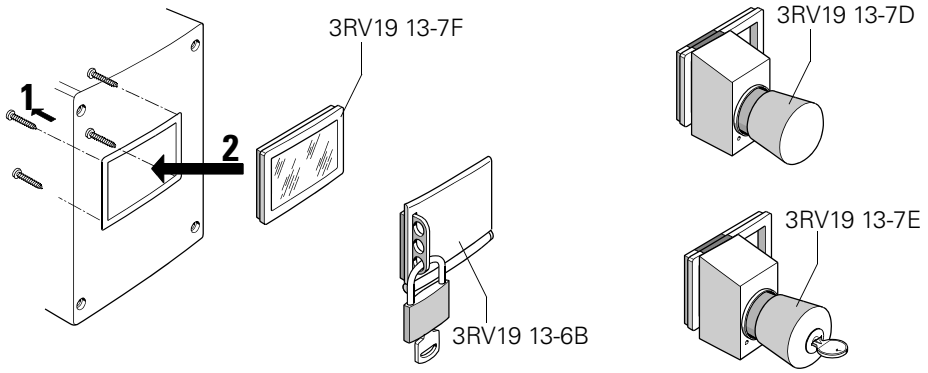

Fig. 2-25: Accessories for the enclosures and front plates (frame size S00)

Locking device 3RV19 13-6B (for frame size S00)

The locking device can be used on the inside of the housings or front plates. To do this, remove the frame of the actuator membrane. The locking device can be secured with up to 3 padlocks that can prevent the circuit breaker/ MSP from being switched on during maintenance work, for example.

Emergency-stop button 3RV19 13-7. (for frame size S00)

The emergency-stop button is attached to the actuator membrane. When hit, the circuit breaker/MSP is switched off and the button locks into position. You can release the button by turning it or using a key. The circuit breaker/ MSP can then be switched on again.

Indicator lights 3RV19 03-5B (for frame sizes S00, S0, S2)

Indicator lights are available for the housings and front plates of circuit breakers/MSPs in frame sizes S00, S0, and S2. They contain a glow lamp and red, green, yellow, orange, and transparent lenses. Indicator lights are available for the following voltage ranges: 110-120 V, 220-240 V, 380-415 V and 480-500 V.

Installation of the indicator lights

There is a precut opening on the front of the housing that can be knocked out to install an indicator light

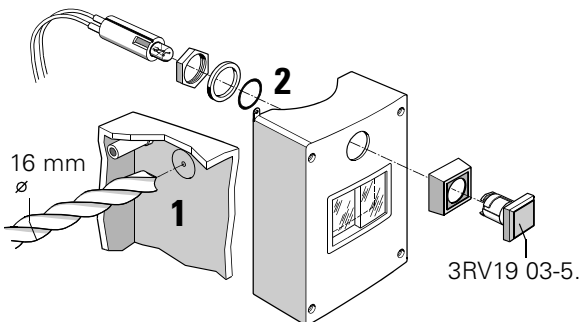

Fig. 2-26: Indicator light installation in a molded-plastic housing (example: frame size S00)

2.4.8 Busbar adapter 8US1 (Fastbus system)

To enable the circuit breakers/MSPs to be mounted without using up too much space, and to ensure that the infeed is economical in terms of both time and money, the switches can be mounted directly onto busbar systems using busbar adapters.

The circuit breakers/MSPs are snapped onto the adapter and connected at the input side. This prepared unit is mounted directly onto the busbar systems, thus both attaching it mechanically and establishing electrical contact.

Busbar systems

The adapters are suitable for the following systems:

Busbar systems with center-to-center spacing	For copper busbars in acc. with DIN 46 433	
	Width	**Depth**
40 mm systems	12 mm and 15 mm	5 mm and 10 mm
60 mm systems	12 mm to 30 mm	5 mm and 10 mm

Table 2-14: Busbar systems

Accessories

The following accessories are available for busbar adapters:

- Modules that can be mounted on either side to widen the adapters
- Busbar holder for 3 rails
- Molded-plastic covers for 3 terminals (40 mm system)
- Molded-plastic cover profiles for shock protection

Measurements

The following table lists the dimensions of the busbar adapters and accessories.

System	Busbar adapter and accessories	Length	Width	For circuit breakers/MSPs in frame size
40 mm	Circuit breaker/MSP + lateral auxiliary switch	121 mm 121 mm	45 mm 55 mm	S00, S0 S00, S0
	Circuit breaker/MSP	139 mm	55 mm	S2
	Circuit breaker/MSP	182 mm 182 mm	70 mm 72 mm	S3 (to 400 V)[1)] S3 (480 to 690 V)[2)]
	Side module	139 mm 182 mm	13.5 mm 13.5 mm	S2 S3
60 mm	Circuit breaker/MSP	182 mm	45 mm	S00, S0
		182 mm	55 mm	S2
		182 mm 182 mm	70 mm 72 mm	S3 (to 400 V)[1)] S3 (480 to 690 V)[2)]
	Side module	182 mm	13.5 mm	S00 to S3

Table 2-15: Dimensions of the busbar adapters and accessories

1) Up to 460 V AC with max. short-circuit breaking capacity of 25 kA
2) Not to be used for voltages < 480 V
short-circuit breaking capacity 480/500/525 V AC
- Up to In=25 A: max. 30 kA
- Up to In=90 A: max. 16 kA
short-circuit breaking capacity 690 V AC: max. 12 kA

You can find additional information about load feeders on busbar systems in Chapter 5.

Mounting circuit breakers/MSPs on a busbar system Frame sizes S00/S0

The following illustrations show you how to mount circuit breakers/MSPs in frame sizes S00 and S0 onto busbar adapters (8US1) and how to remove them again, using frame size S00 as an example:

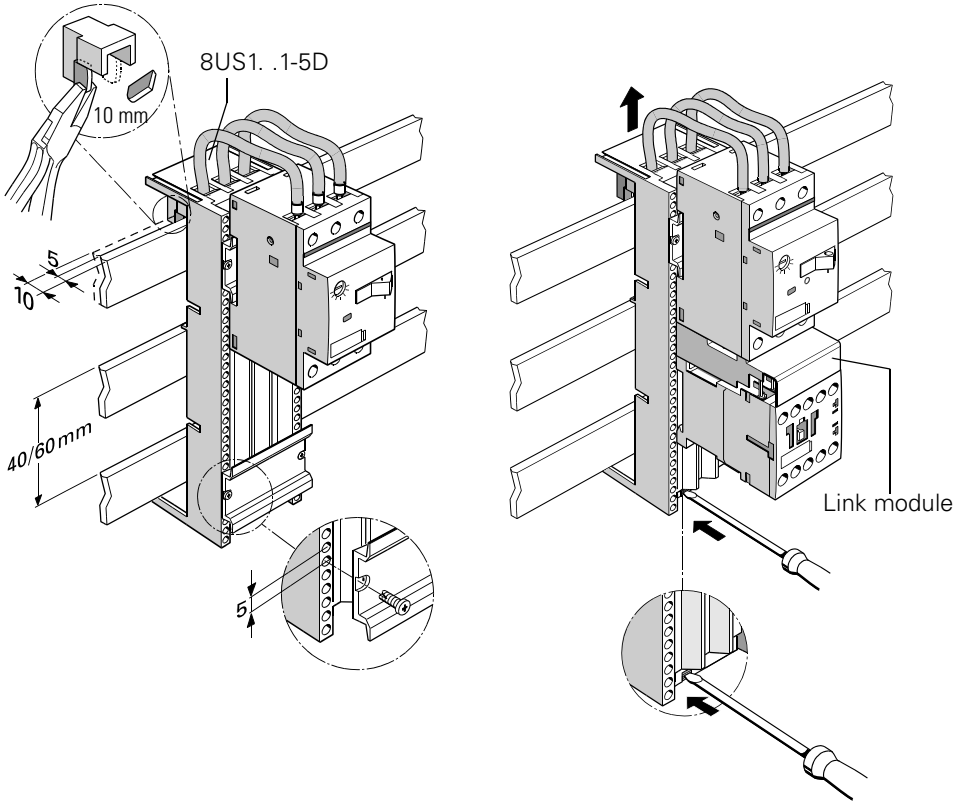

Fig. 2-27: Mounting circuit breakers/MSPs on busbar adapters (frame sizes S00 and S0)

Mounting circuit breakers/MSPs on a busbar system Frame sizes S2/S3

The following illustrations show you how to mount circuit breakers/MSPs in frame sizes S2 and S3 onto a busbar adapter:

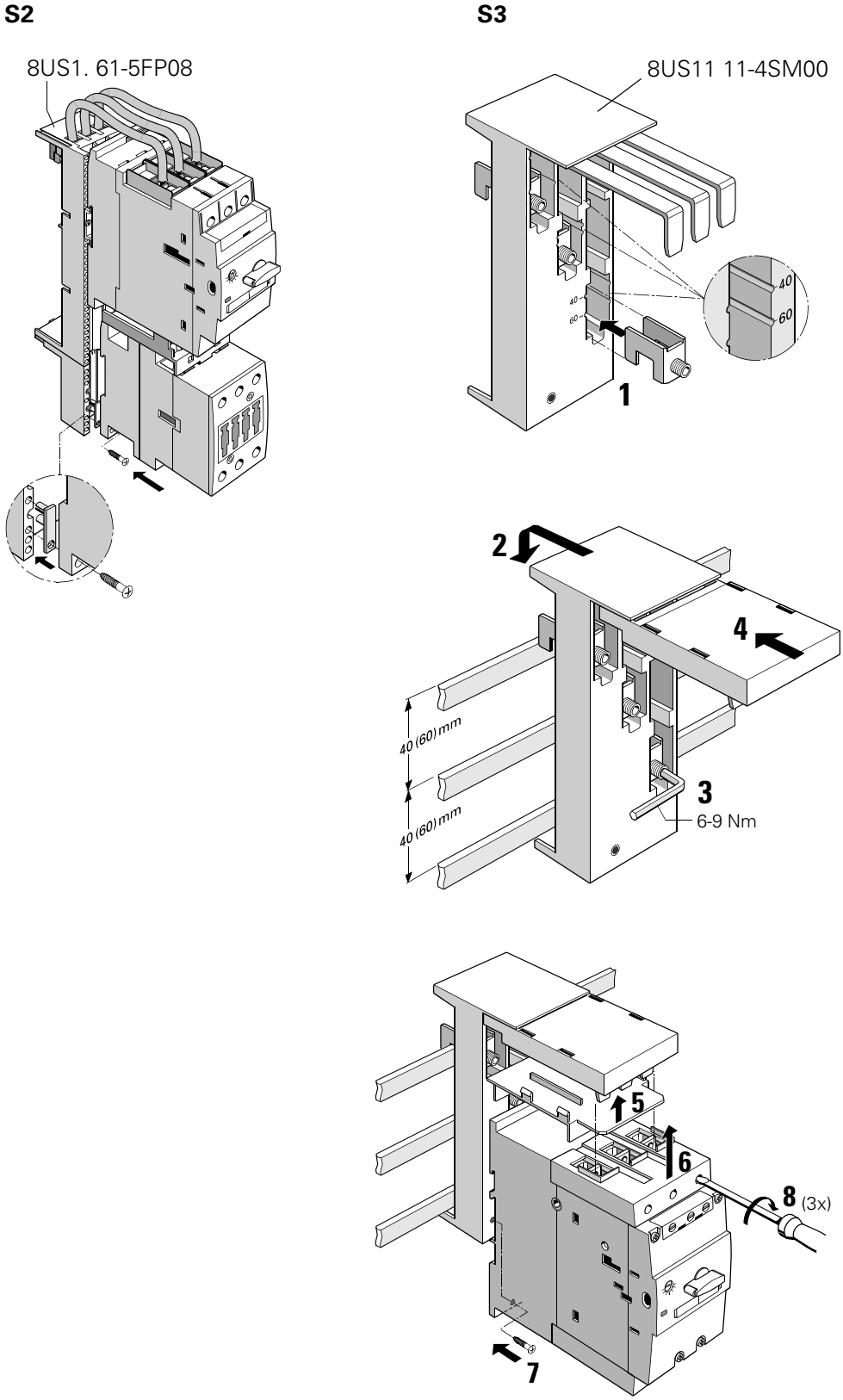

Fig. 2-28: Mounting circuit breakers/MSPs on busbar adapters (frame sizes S2 and S3)

Mounting accessories

The following illustration shows you how to mount accessories for busbar adapters for frame sizes S00 to S2:

- Side module
- Device holder
- Extension piece
- Outgoing terminal rail (for frame sizes S00 and S0 only)

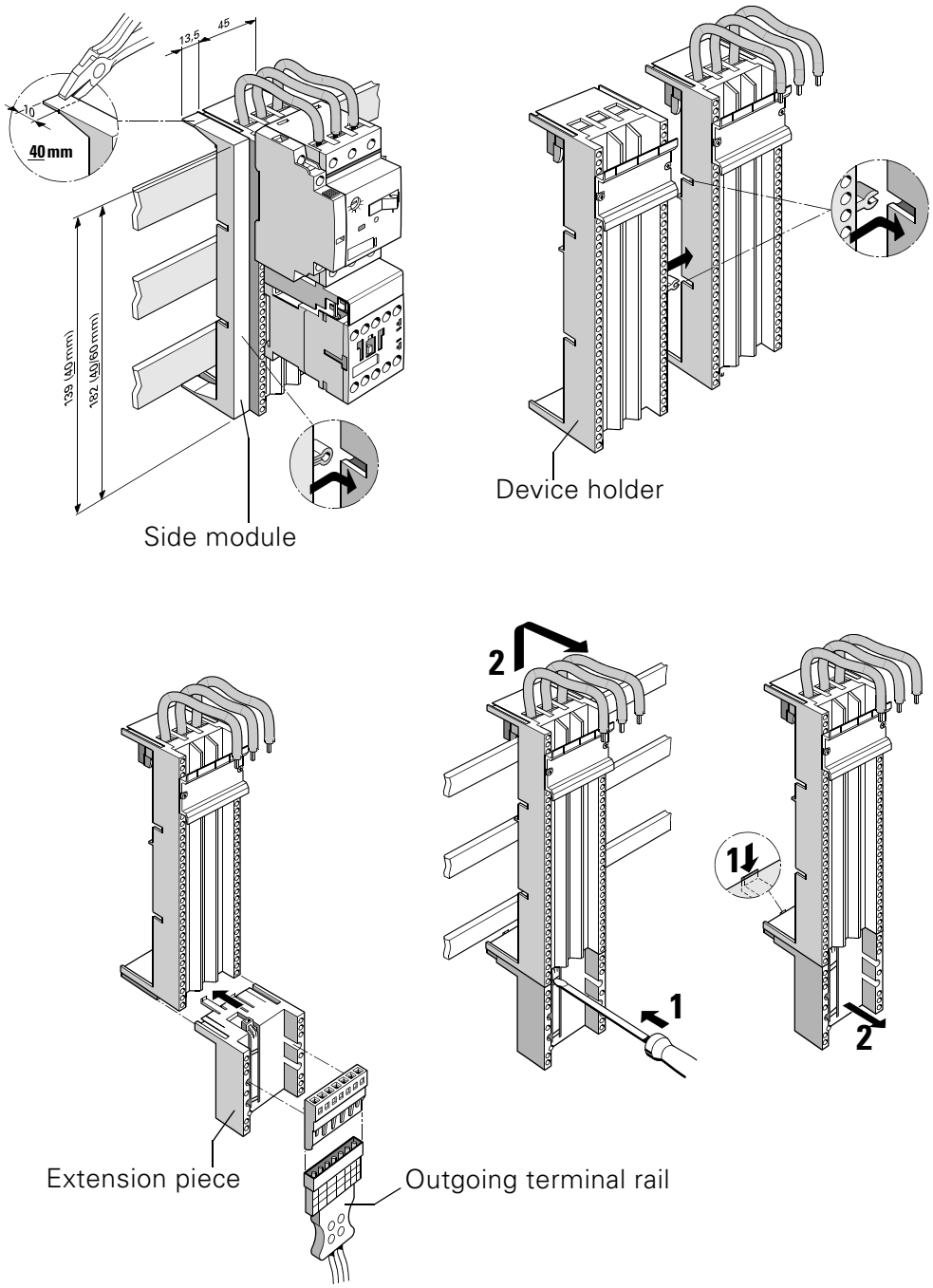

Fig. 2-29: Accessories for busbar adapters (frame sizes S00 to S2)

2.4.9 Isolated 3-phase busbar system

For 3RV1 frame sizes S00, S0, and S2, 3-phase busbars can be used to quickly and easily provide line side feeding when mounting circuit breakers/ MSPs on to DIN rail. There is only one power supply, via a feed-in terminal.

The 3-phase busbar systems are safe from fingers and are shock protected DIN VDE 0106 Part 100. They are rated for the short-circuit stress that can occur on the output side of the connected circuit breakers/MSPs.

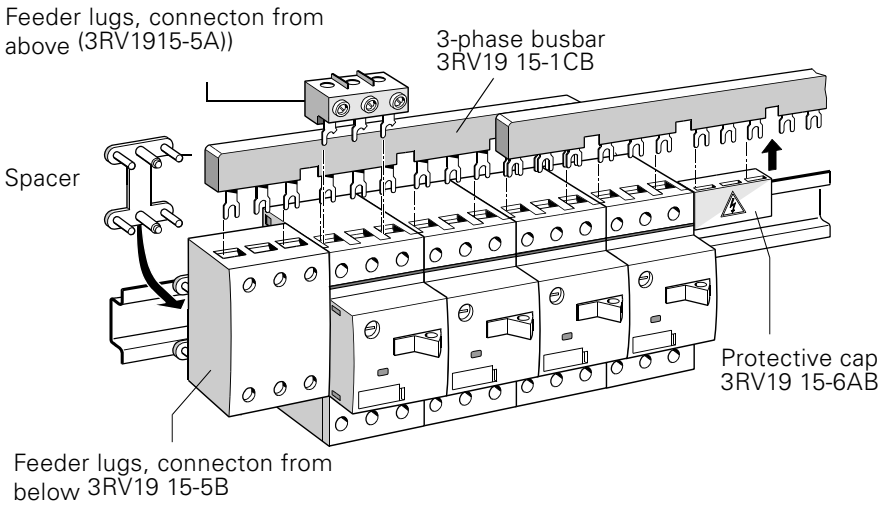

Fig. 2-30: 3-phase busbar system (example: frame size S00)

Rated operational voltage/current

Rated operational voltage	690 V
Rated current	Frame sizes S00, S0: 63 A
	Frame size S2: 108 A

Table 2-16: Rated operational voltage/current

Versions

The 3-phase busbars take 2 to 5 circuit breakers/MSPs, depending on the model. There are busbars with more generous spacing for circuit breakers/ MSPs with accessories attached on the side

Frame size of the circuit breaker/MSP	Spacing	Models
S00, S0	45 mm	For 2, 3, 4, or 5 circuit breakers/MSPs
	55 mm	For 2, 3, 4, or 5 circuit breakers/MSP + acc.
	63 mm	For 2 or 4 circuit breakers/MSPs + accessories
S2	55 mm	For 2, 3, or 4 circuit breakers/MSPs
	75 mm	For 2, 3, or 4 circuit breakers/MSPs + accessories

Table 2-17: Types of 3-phase busbars

Combination of frame sizes S00 and S0

Circuit breakers/MSPs in frame sizes S00 and S0 vary in height and depth. They therefore **cannot** be combined on one busbar. You can combine two busbars for circuit breakers/MSPs in frame sizes S0 and S00 using an extension piece.

Extending the bus

It is possible to extend the busbars by clamping the connecting lugs of a another bus (turned 180°) under the terminals of the last circuit breaker/MSP (see the section on mounting).

Attention
Note the current-carrying capacity of the busbars when you extend them.

Accessories

The following accessories are available for the isolated 3-phase busbar system:

- Feeder lugs from above (3RV1915-5A for S00, 3RV1925-5AB for S0, 3RV1935-5A for S2)
- Feeder lugs from below (3RV1915-5B for S00, S0)
- Connector
  A connector links two 3-phase busbars over a space of 45 mm for circuit breakers/MSPs in frame size S0 (left) and frame size S00 (right).
- Protective cap for connecting lugs (3RV19 15-6AB)
  Protective caps provide shock protection for spare slots. To extend the bus, remove the protective caps.

Feeder lugs

3-phase feeder lugs make it possible to have greater conductor cross-sections than on the circuit breaker/MSP itself.
Tightening torque: 2 to 4 Nm (17.6 to 35.2 lb·in).

Frame size of the circuit breaker/MSP	Connection	Conductors	Conductor cross-section
S00, S0	From above	Single- or multi-core Finely stranded with wire end ferrule AWG	2.5 to 25 mm^2 4 to 16 mm^2 12 to 4
S00, S0	From below	Single- or multi-core Finely stranded with wire end ferrule AWG	6 to 25 mm^2 4 to 16 mm^2 10 to 4
S2	From above	Single- or multi-core Finely stranded with wire end ferrule AWG	2.5 to 50 mm^2 1.5 to 35 mm^2 14 to 0

Table 2-18: Conductor cross sections of the 3 phase feeder lugs

Feeder lugs – connection from below

Attention
The feeder lugs with connection from below is clamped on **instead** of a circuit breaker/MSP. Make sure you check how much space you require when planning the 3-phase busbars.

Mounting the 3-phase busbars

Frame size S00
Screw connection

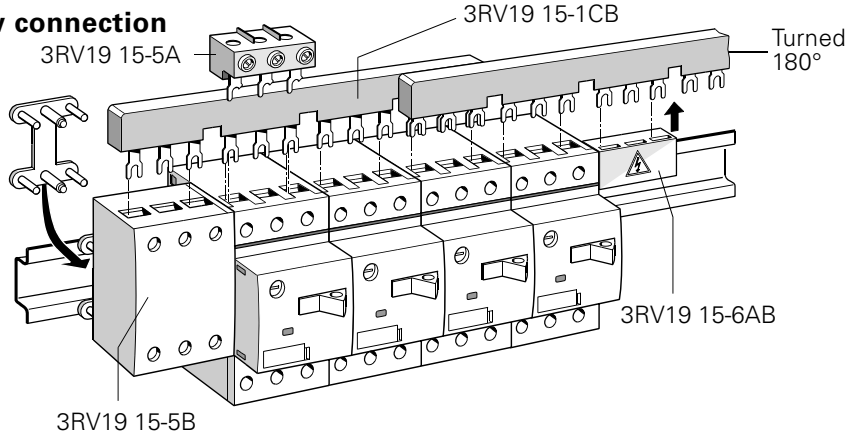

Frame size S00
Cage-clamp

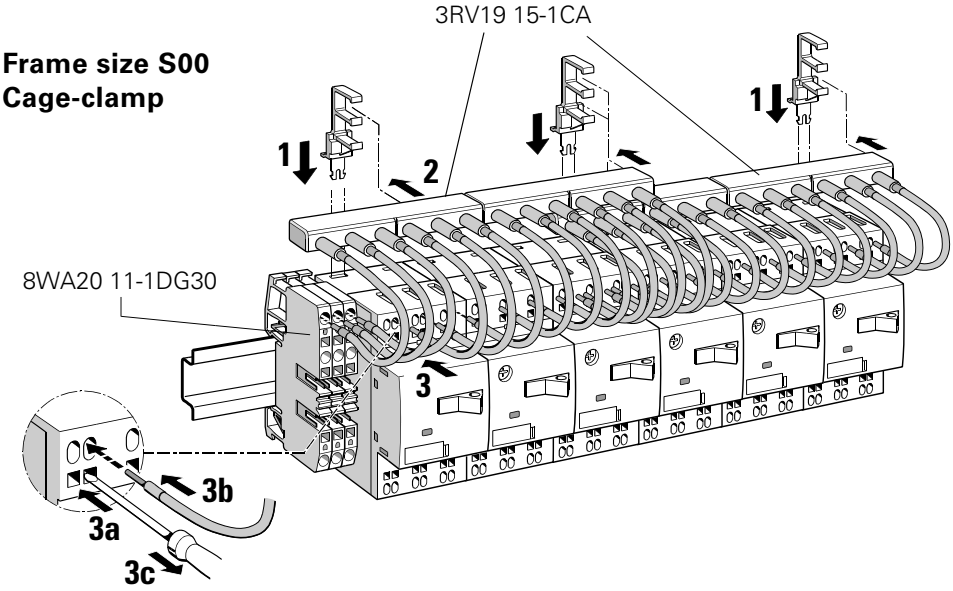

Frame size S0
Screw connection

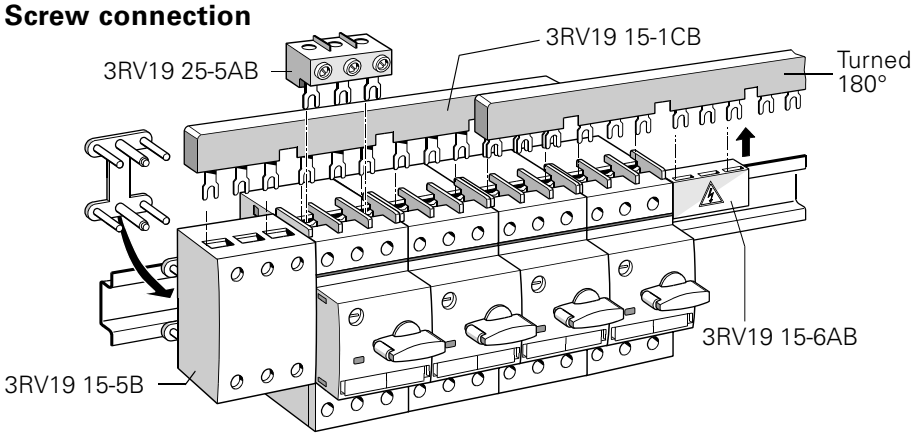

Fig. 2-31: Mounting the isolated 3-phase busbar system (frame sizes S00 to S0)

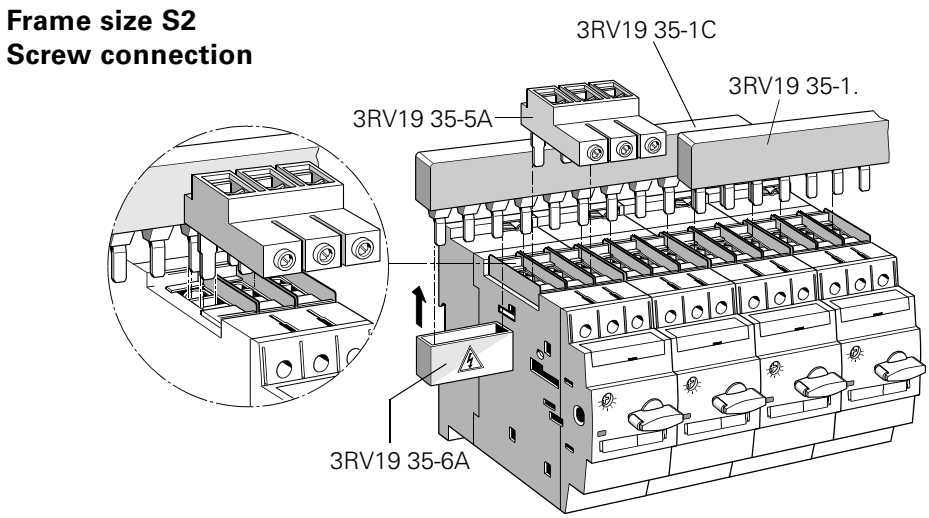

Fig. 2-32: Mounting the isolated 3-phase busbar system (frame size S2)

2.4.10 Link module for connection to a contactor

Link Module Circuit breaker/ MSP-Contactor

When assembling a combination starter (load feeder) a link module between the circuit breaker/MSP and the contactor is needed to provide both an electrical and mechanical connection. The following types of link modules are available:

Operating voltage Contactor	Frame size Contactor	Frame size Circuit breaker/MSP
AC and DC	S00	S00
	S00	S0
	S0	S0
	S2	S2
	S3	S3

Table 2-19: Link module circuit breaker/MSP - contactor

2.5 Mounting and connection

2.5.1 Installation

Mounting position

You can install the 3RV1 circuit breakers/MSPs in almost any position.

Snap-on mounting

The circuit breakers/MSPs are mounted by snapping them onto 35 mm rails that comply with DIN EN 50 022. The circuit breakers/MSPs with a frame size of S3 require a rail with an installation height of 15 mm. Alternatively, they can also be snapped onto 75 mm rails.

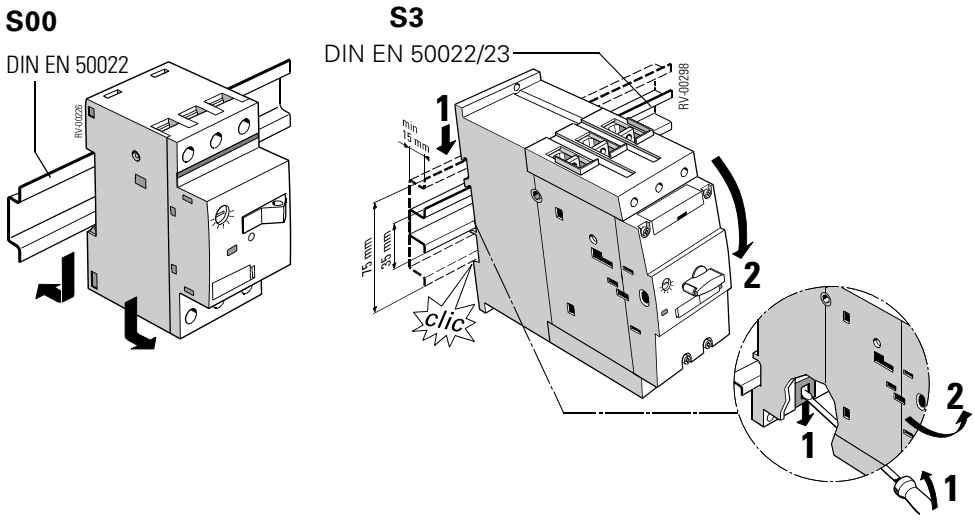

Fig. 2-33: Mounting the circuit breakers/MSPs onto the rail

Panel mounting

The circuit breakers/MSPs can be attached to a flat surface with 2 screws. For circuit breakers/MSPs in frame sizes S00 and S0, two push-in lugs (3RB1900-0B) (pack of 10) are also required.
Circuit breakers/MSPs in frame sizes S2 and S3 can be screwed directly onto a base plate.

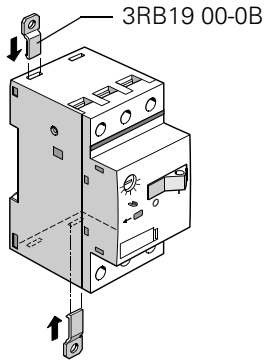

Fig. 2-34: Screw-on mounting of the 3RV1 (example: frame size S00)

2.5.2 Connection

Tools

The following items are required to connect the circuit breakers/MSPs:
- Frame sizes S00 to S2: Pozidriv 2 screwdriver
- Frame size S3: Allen key (4 mm)

Conductor cross-sections

The typical SIRIUS conductor cross-sections apply (see Section 1.5.4 "Conductor cross-sections").

Screw-type terminals

3RV1 circuit breakers/MSPs with frame sizes S00 and S0 have terminals with captive screws and terminal washers that enable you to connect 2 conductors, even if they have different cross-sections.

The box terminals of the circuit breakers/MSPs of frame sizes S2 and S3 can also take 2 conductors with different cross-sections. With the exception of circuit breakers/MSPs of frame size S3, which have terminal screws with a 4 mm Allen screw, all the terminal screws can be tightened using a standard screwdriver or a Pozidriv screwdriver (size 2).

You can remove the box terminals from circuit breakers/MSPs with a frame size of S3 to connect conductors with ring-tongue or connecting bars.
A terminal cover 3RT19 46-4EA1 is available as shock protection and to ensure that you comply with the required creepages and clearances when the box terminals are removed.

Soldering pin connector

Circuit breakers/MSPs in frame size S00 can be soldered onto printed circuit boards by means of a soldering pin connector. A soldering pin connector is available for the main contacts only (3RV19 18-5A) or for the main contacts and the transverse auxiliary contacts 1 NO +1 NC (3RV19 18-5B).

Mounting the soldering pin adapters

The soldering pin adapters are clamped above and below in the screw-type terminals of the circuit breakers/MSPs. The power supply can also be taken to the printed circuit boards via cables.

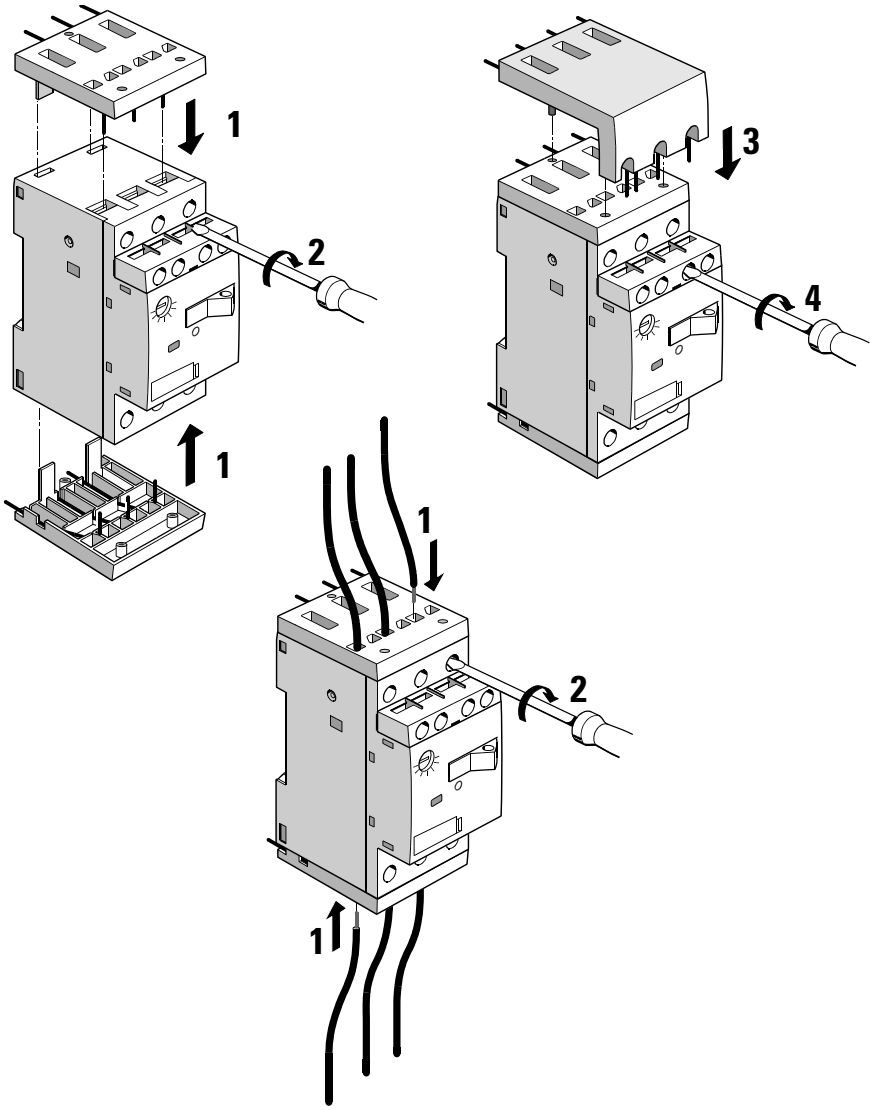

Fig. 2-35: Circuit breaker/MSP, soldering pin connector (frame size S00)

2.5.3 Device circuit diagrams

Frame size S00

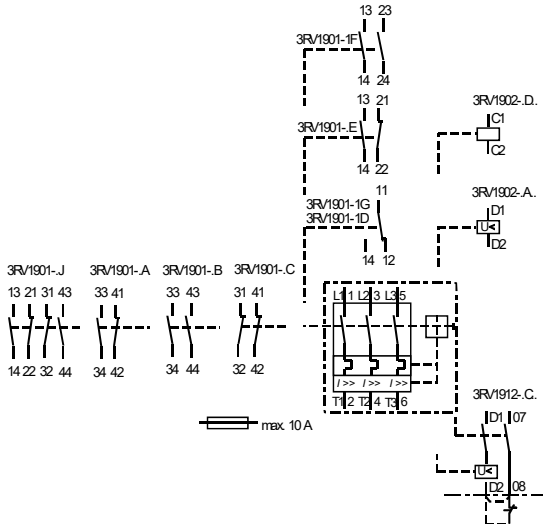

Fig. 2-36: Device circuit diagram (frame size S00, example: circuit breaker (MSP) for motor protection 3RV10)

Frame sizes S0 to S3

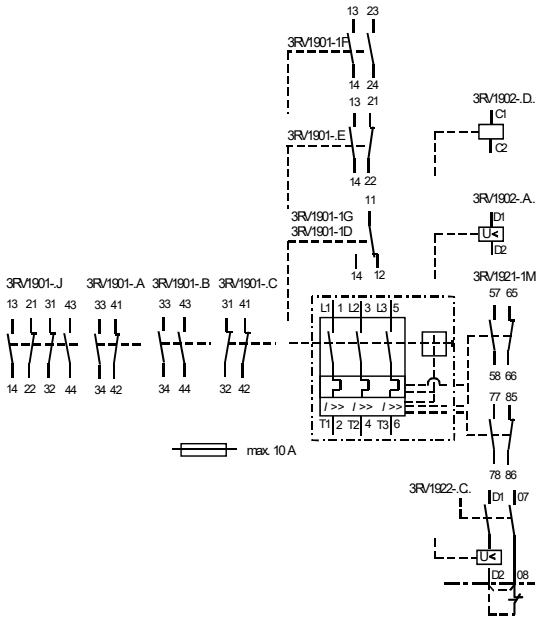

Fig. 2-37: Device circuit diagram (frame sizes S0 to S3, example: circuit breaker (MSP) for motor protection 3RV10)

Circuit breaker/MSP with overload relay function Frame sizes S0 to S3

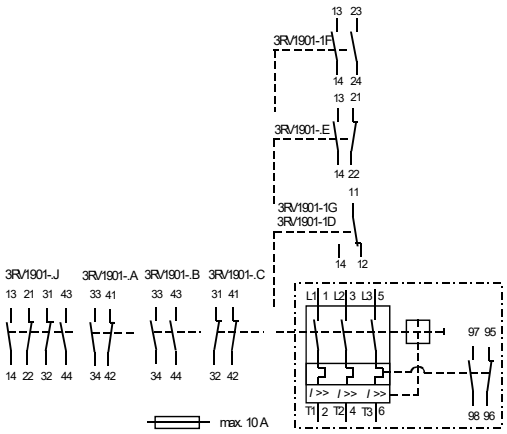

Fig. 2-38: Circuit breaker/MSP with overload relay function, device circuit diagrams (frame sizes S0 to S3)

2.6 Dimensional drawings (dimensions in mm)

Circuit breaker/MSP 3RV1

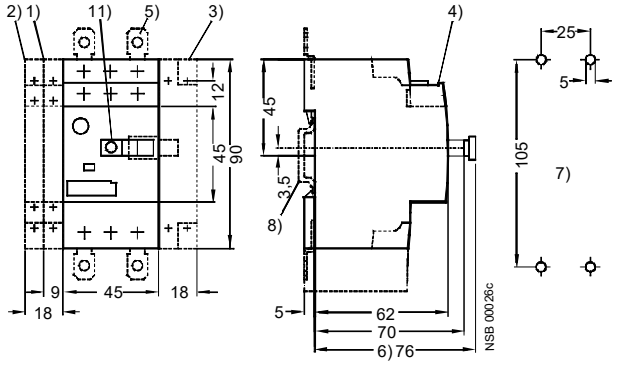

Fig. 2-39: 3RV10 11, 3RV16 (frame size S00)

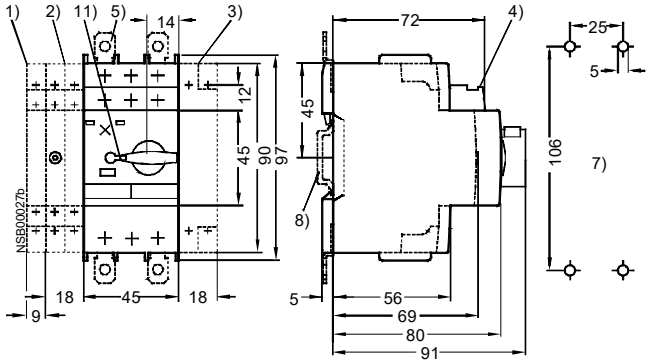

Fig. 2-40: 3RV10 21, 3RV13 21, 3RV14 21 (frame size S0)

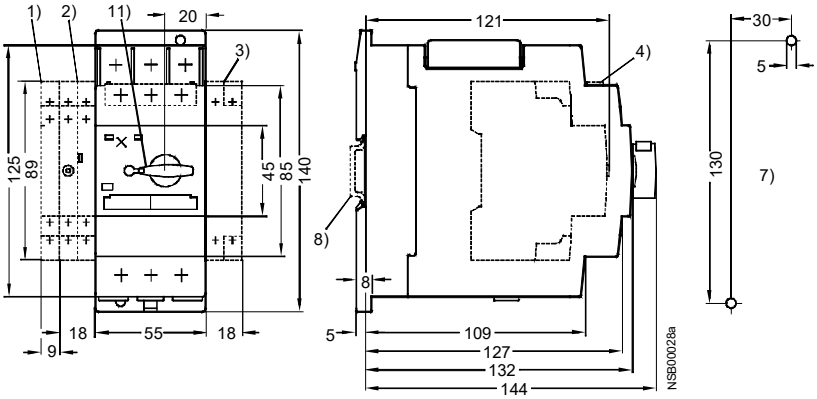

Fig. 2-41: 3RV10 31, 3RV13 31, 3RV14 31 (frame size S2)

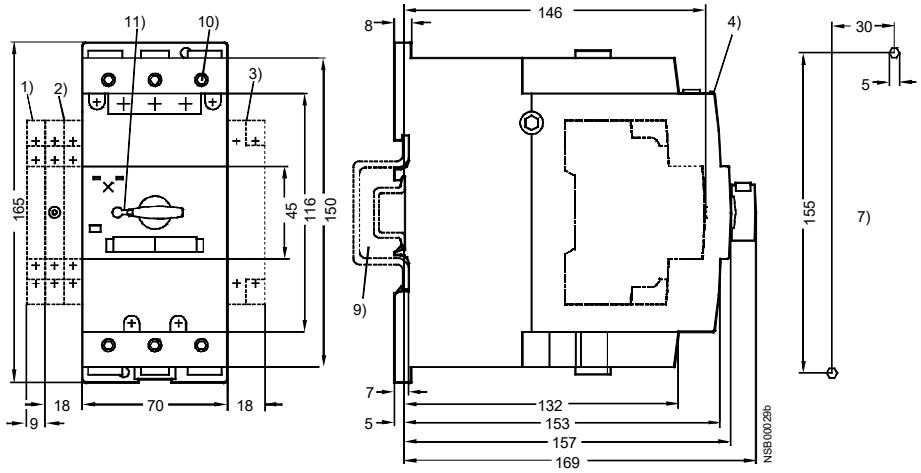

Fig. 2-42: 3RV10 4, 3RV13 4 (frame size S3)

1) Side-mount auxiliary contacts, 2-pole
2) Alarm switch (S0 to S3) or side-mount auxiliary contacts, 4-pole (S00 to S3)
3) Auxiliary release
4) Transverse auxiliary switch
5) Push-in lugs for screw mounting
6) Only with undervoltage release with leading auxiliary switch
7) Drilling pattern
8) 35 mm rail in acc. with EN 50022
9) Mounting onto 35 mm rail, 15 mm high, in acc. EN 50 022 or with EN 50 022 or 75 mm rail in acc. with EN 50023
10) 4 mm Allen screw
11) Lockable in 0 position with shackle (3.5 to 4.5 mm in diameter

3RV11 circuit breaker/MSP with overload relay function

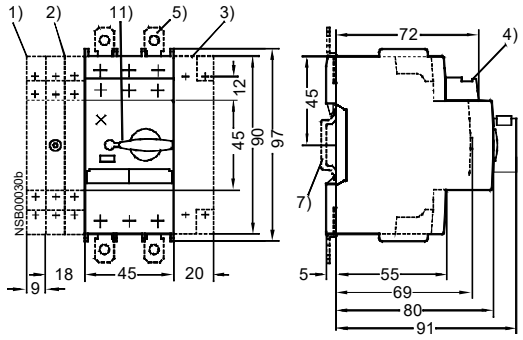

Fig. 2-43: 3RV11 21, 3RV16 (frame size S0)

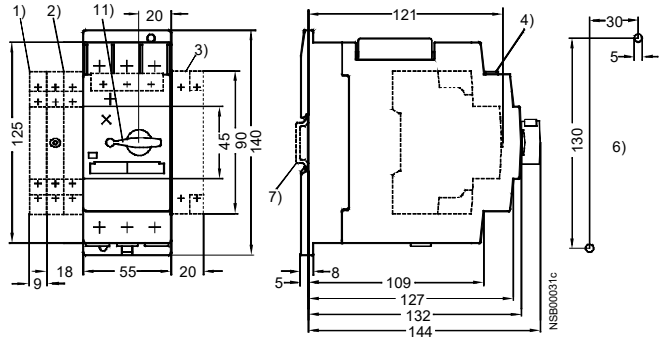

Fig. 2-44: 3RV11 (frame size S2)

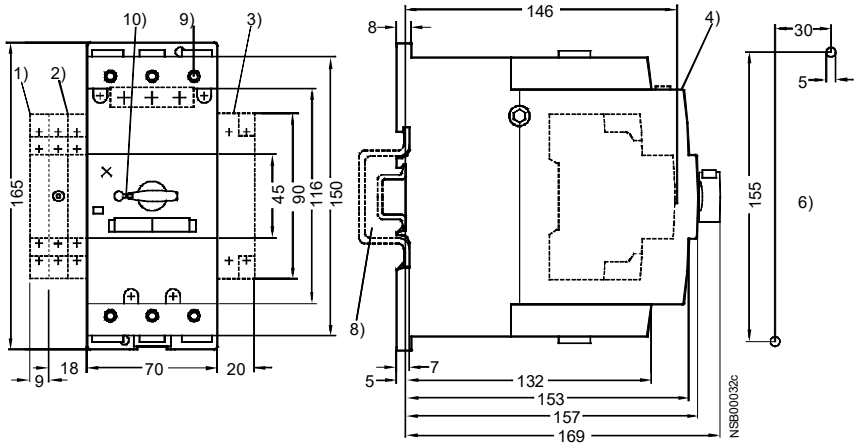

Fig. 2-45: 3RV11 42 (frame size S3)

1) Side-mount auxiliary contacts, 2-pole
2) Alarm switch or side-mount auxiliary contacts, 4-pole
3) Block for overload relay function
4) Transverse auxiliary switch
5) Push-in lugs for screw-type mounting
6) Drilling pattern
7) 35 mm rail in acc. with EN 50 022
8) Mounting onto 35 mm rails, 15 mm high, in acc. with EN 50 022 or 75 mm rails in acc. with EN 50 023
9) 4 mm Allen screw
10) Lockable in 0 position with shackle (3.5 to 4.5 mm in diameter)

Disconnecting/isolator module

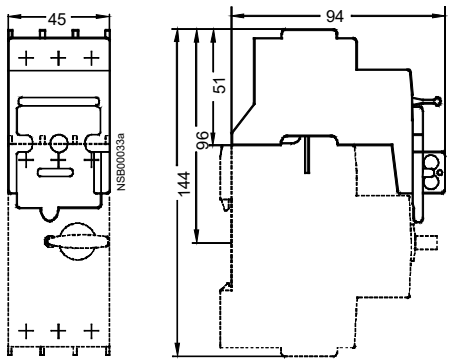

Fig. 2-46: 3RV19 28-1A (for frame size S0)

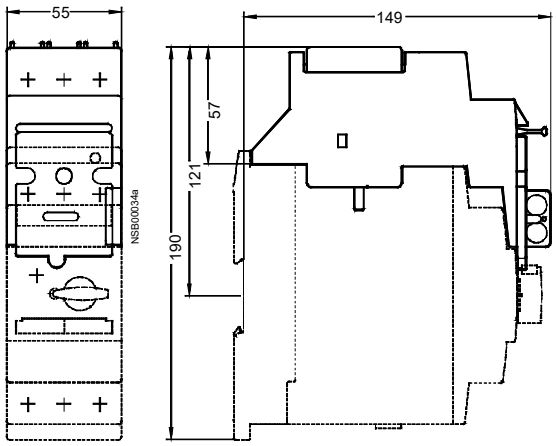

Fig. 2-47: 3RV19 38-1A (for frame size S2)

Molded-plastic panel/surface mount enclosure

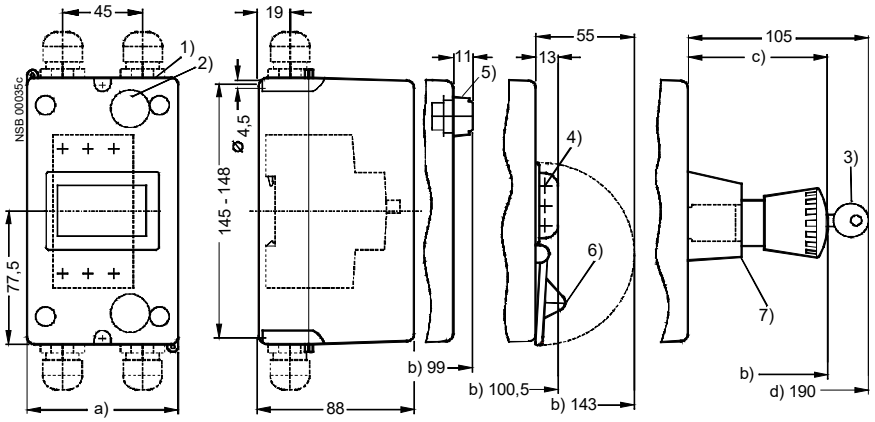

Fig. 2-48: 3RV19 13-1.... (for frame size S00)

a) 3RV19 13-1CA00: 85 mm
   3RV19 13-1DA00: 105 mm
b) with 3RV19 13-7D: 146.5 mm
   with 3RV19 13-7E: 166.5 mm
   The dimensions relate to the mounting surface
c) with 3RV19 13-7D: 64 mm
   with 3RV19 13-7E: 84 mm
d) The dimensions relate to the mounting surface

1) Knockout opening for M25
2) Knockout opening for rear M20 cable routing
3) With safety lock
4) Max. shackle diameter for padlock is 8 mm
5) Indicator light 3RV19 03-5.
6) Locking device 3RV19 13-6B
7) Emergency-stop button 3RV19 13-7

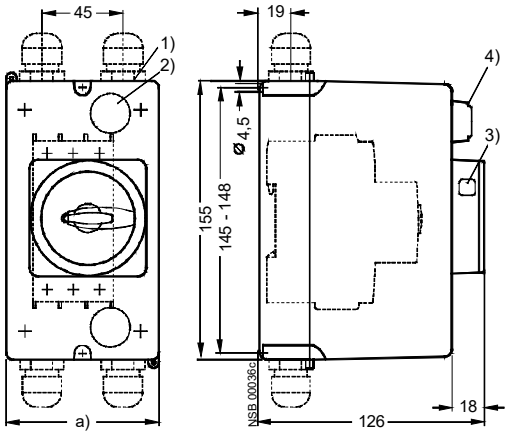

Fig. 2-49: 3RV19 23-1.... (for frame size S0)

a) 3RV19 23-1CA00: 85 mm
   3RV19 23-1DA00: 105 mm
1) Knockout opening for M25
2) Knockout opening for rear M20 cable entry
3) Opening for padlock with a max. shackle diameter of 8 mm
4) Indicator light 3RV19 03-5.

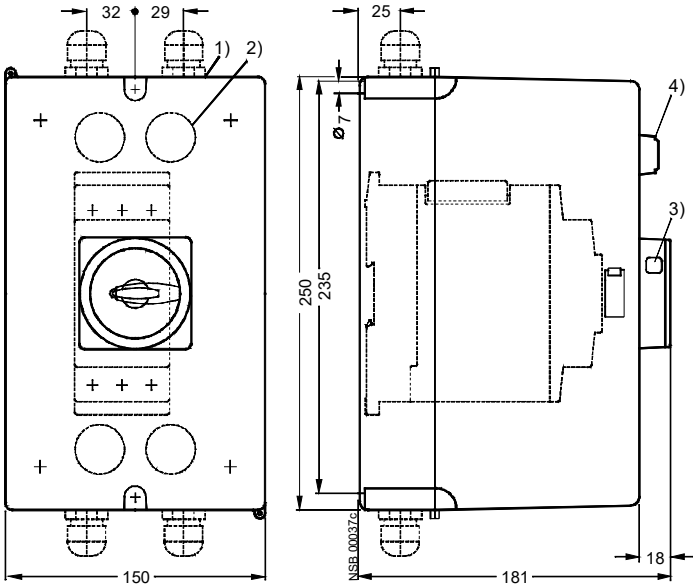

Fig. 2-50: 3RV19 33-1.... (for frame size S2)

1) Knockout opening for M32 (left) and M40 (right)
2) Knockout opening for rear M32 cable entry
3) Opening for padlock with a max. shackle diameter of 8 mm
4) Indicator light 3RV19 03-5.

Cast-Aluminum panel/surface mount enclosure

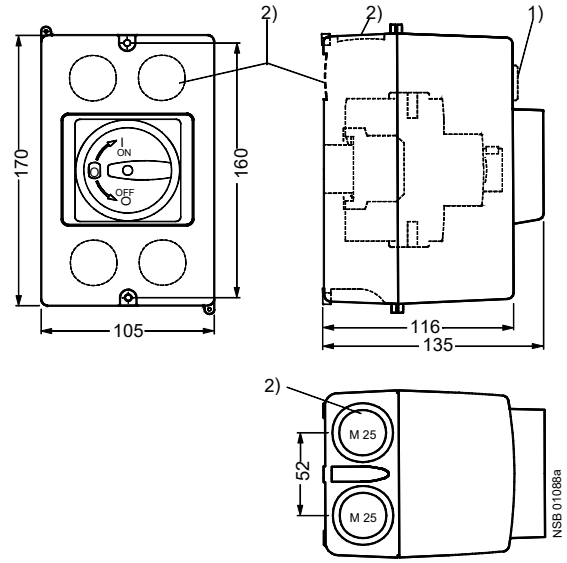

1) Indicator light 3RV19 03-5.
2) Knockout opening for M25

Fig. 2-51: 3RV19 23-1.A01 for circuit breaker/MSP, frame size S0

Molded-plastic flush mount enclosure

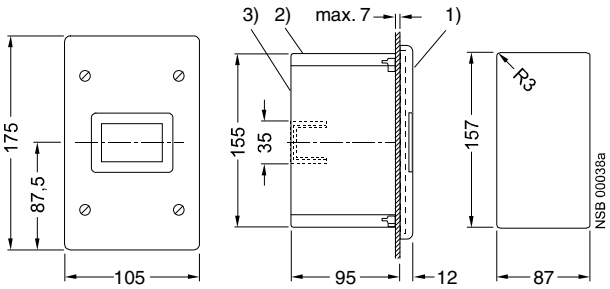

1) Leuchtmelder 3RV19 03-5.
2) Ausbrechöffnungen für M25
3) Ausbrechöffnungen für M20

1) Indicator light 3RV1903-5
2) Knockout opening for M25
3) Knockout opening for M20

Fig. 2-52: 3RV19 13-2DA00 (frame size S00)

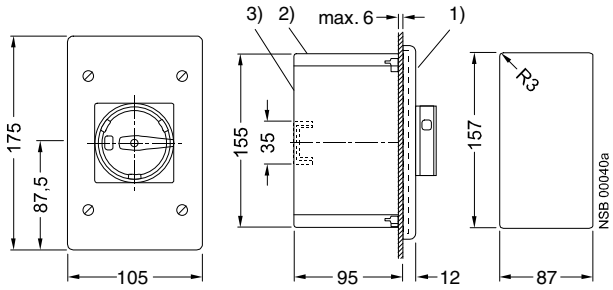

1) Leuchtmelder 3RV19 03-5.
2) Ausbrechöffnungen für M25
3) Ausbrechöffnungen für M20

1) Indicator light 3RV1903-5
2) Knockout opening for M25
3) Knockout opening for M20

Fig. 2-53: 3RV19 23-2DA00/-2GA00 (frame size S0)

Molded-plastic front plate

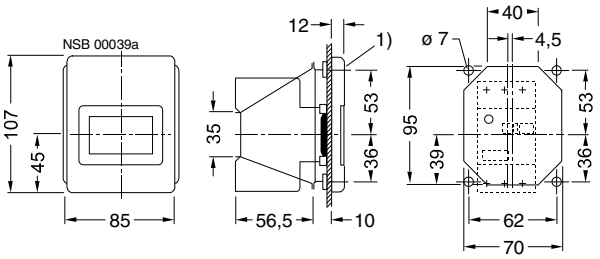

1) Indicator light 3RV1903-5.

Fig. 2-54: 3RV19 13-4C (frame size S00)

Molded-plastic Front plate and Support

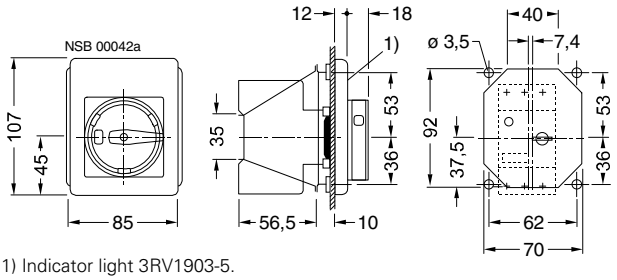

1) Indicator light 3RV1903-5.

Fig. 2-55: 3RV19 23-4B, 3RV19 23-4E (frame sizes S0, S2, S3); 3RV19 23-4G (only for frame size S0)

Soldering pin adapters for main and auxiliary contacts

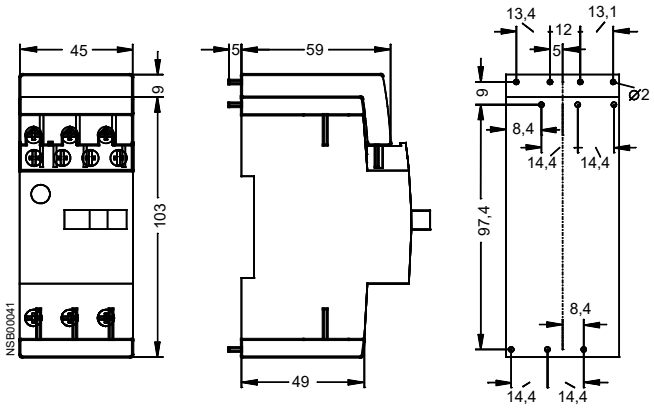

Fig. 2-56: 3RV19 18-5A/-5B (frame size S00)

Thru-the-door rotary operators

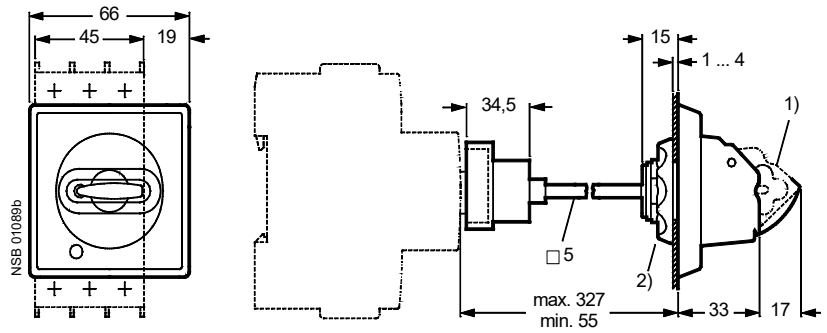

1) Lockable in 0 position with shackle (max. 8 mm in diameter)
2) Affixed with screw caps

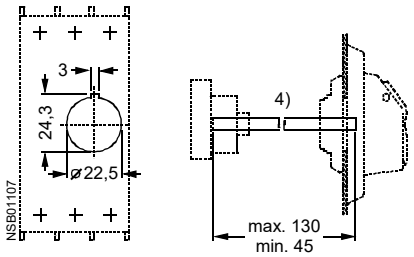

4) Supplied with a shaft length of 130 mm: adaptable by shortening of the shaft

Fig. 2-57: 3RV19 26-0. (short shaft for circuit breaker/MSP, frame sizes S0, S2, S3)

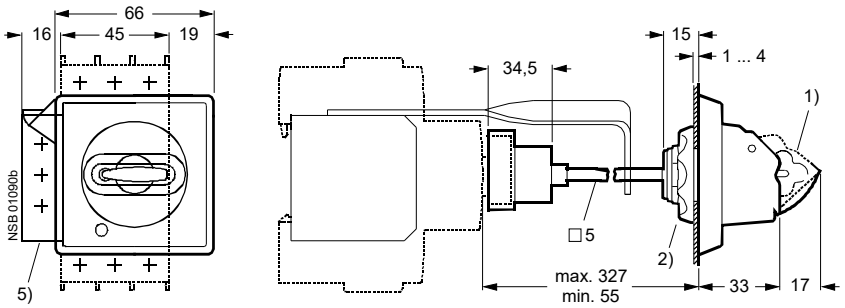

1) Lockable in 0 position with shackle (max. 8 mm in diameter)
2) Affixed with screw caps
5) Ground terminal 35 mm^2 and support bracket for 330 mm shaft

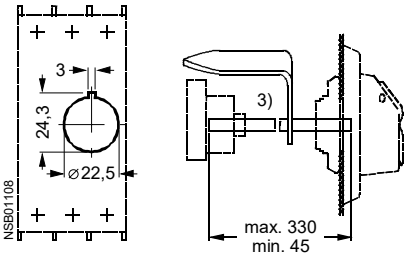

3) Supplied with a shaft length of 330 mm: adaptable by shortening of the shaft

Fig. 2-58: 3RV19 26-0. (long shaft (with support) for circuit breaker/MSP, frame sizes S0, S2, S3)

Thru-the-door rotary operators for harsh conditions

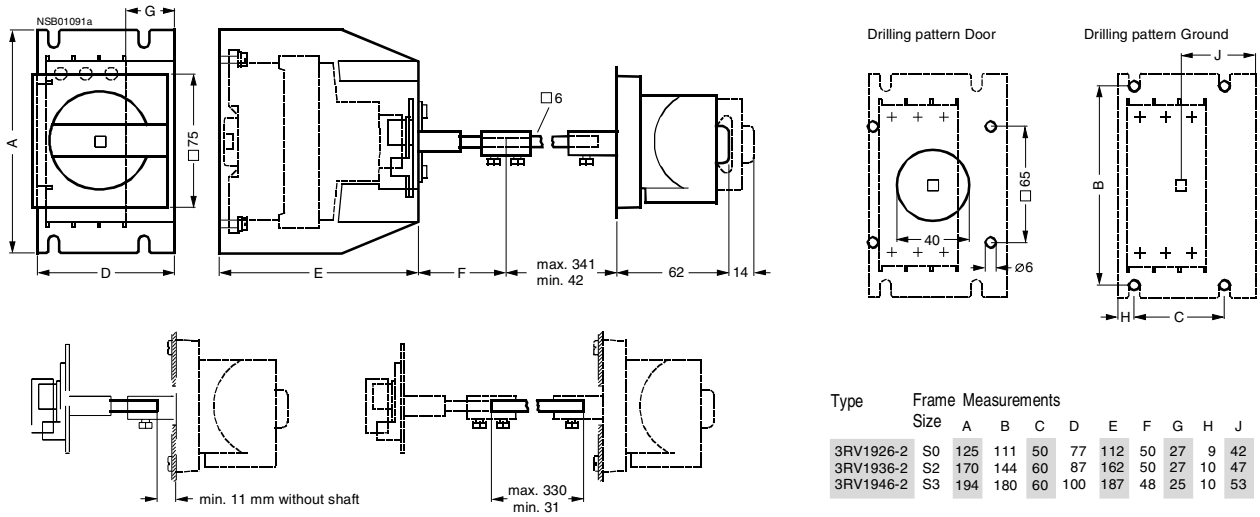

Type	Frame Size	Measurements A	B	C	D	E	F	G	H	J
3RV1926-2	S0	125	111	50	77	112	50	27	9	42
3RV1936-2	S2	170	144	60	87	162	50	27	10	47
3RV1946-2	S3	194	180	60	100	187	48	25	10	53

Fig. 2-59: 3RV19 .6-2. (frame sizes S0, S2, S3)

Terminals for "Combination Motor Controller Type E" in acc. with UL 508

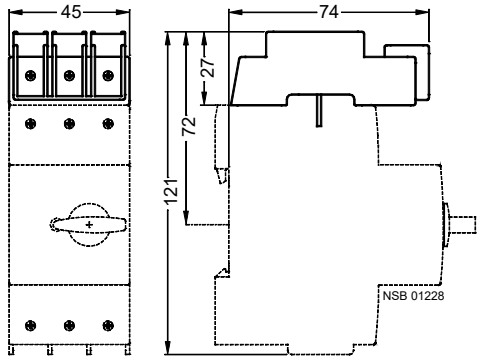

Fig. 2-60: 3RV19 28-1H (frame size S0)

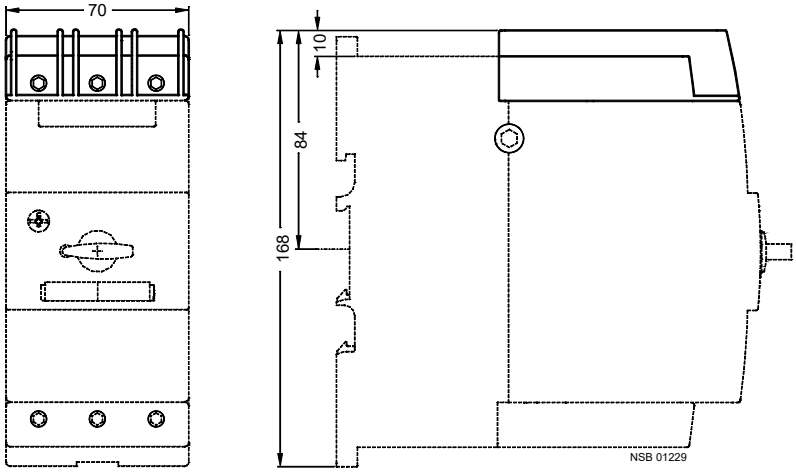

Fig. 2-61: 3RT19 46-4GA07 (frame size S3)

Motorized remote-control mechanism

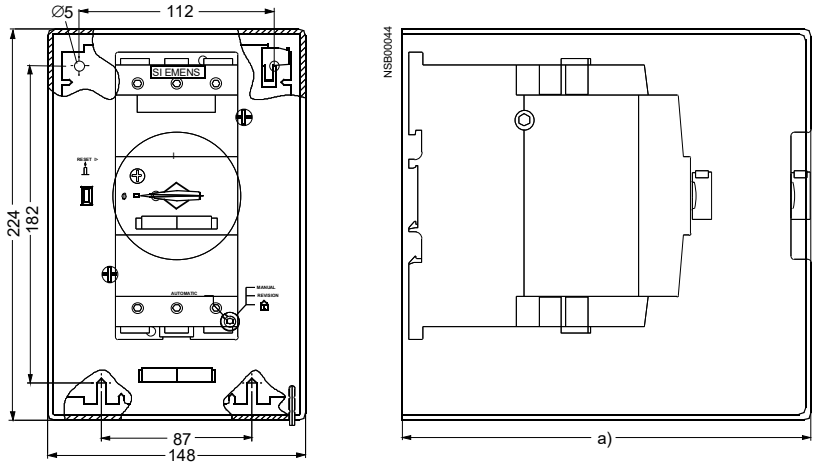

Fig. 2-62: 3RV19 .6-3AP0 for circuit breaker/MSP
a) 3RV19 36-3AP0, frame size S2, 211 mm
b) 3RV19 46-3AP0, frame size S3, 236 mm

Busbar adapter shoes

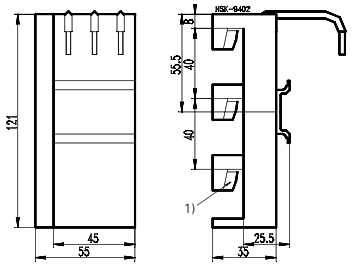

Fig. 2-63: 8US10 .1-5DJ07 (for circuit breaker/MSP, frame sizes S00/S0)

Adapter width:
8US10 51-5DJ07: 45 mm
8US10 61-5DJ07: 55 mm

1) for 40-mm-busbar system:
   width: 12 to 15 mm
   thickness: 5 and 10 mm

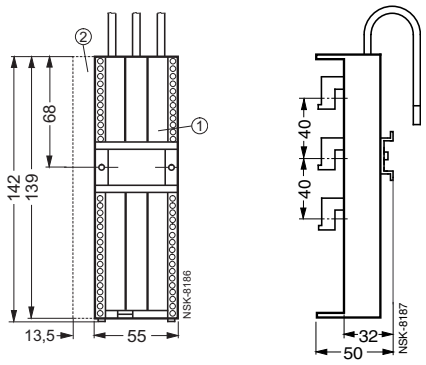

Fig. 2-64: 8US10 61-5FK08 (for circuit breaker/MSP, frame size S2)

1) for 40-mm-busbar system
2) Side module 8US19 98-2KB00

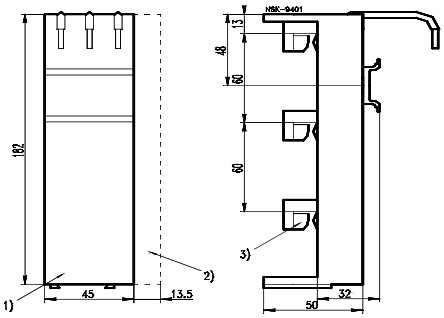

Fig. 2-65: 8US12 51-5DM07 (for circuit breaker/MSP, frame sizes S00/S0)

1) for 60-mm-busbar system
2) Side module 8US19 98-2BM00

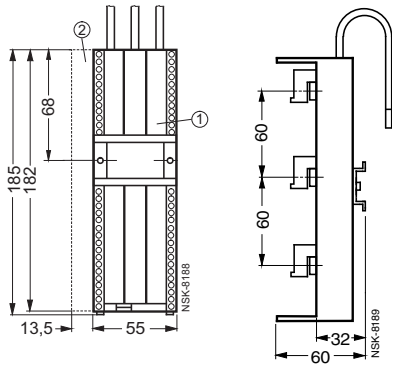

Fig. 2-66: 8US12 61-5FM08 (for circuit breaker/MSP, frame size S2)

1) for 60-mm-busbar system
2) Side module 8US19 98-2BM00

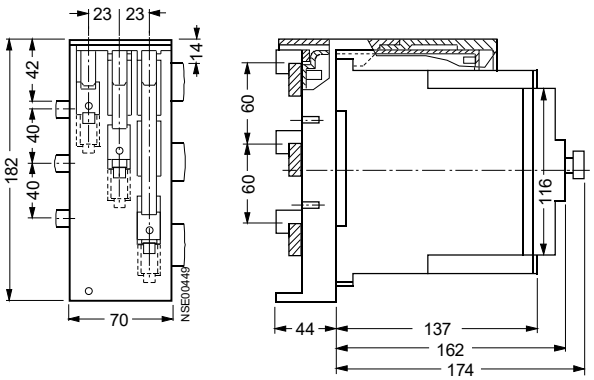

Fig. 2-67: 8US11 11-4SM00 (for circuit breaker/MSP, frame size S3) for 40- and 60-mm-systems

3-phase busbar systems

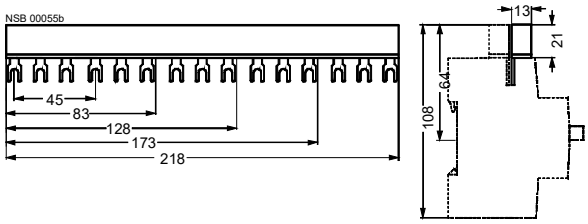

Fig. 2-68: 3RV19 15-1... (frame size S00)
Separation distance 45 mm:
3RV19 15-1AB for 2 circuit breakers/MSPs (length 83 mm)
3RV19 15-1BB for 3 circuit breakers/MSPs (length 128 mm)
3RV19 15-1CB for 4 circuit breakers/MSPs (length 173 mm)
3RV19 15-1DB for 5 circuit breakers/MSPs (length 218 mm)

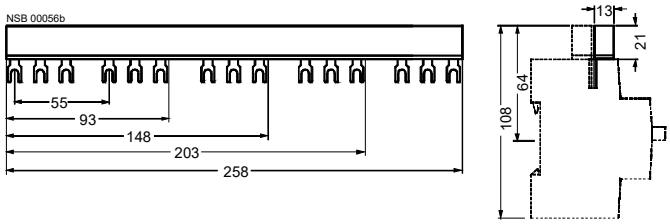

Fig. 2-69: 3RV19 15-1... (frame size S0)
Separation distance 55 mm:
3RV19 15-2AB for 2 circuit breakers/MSPs with accessories (length 93 mm)
3RV19 15-2BB for 3 circuit breakers/MSPs with accessories (length 148 mm)
3RV19 15-2CB for 4 circuit breakers/MSPs with accessories (length 203 mm)
3RV19 15-2DB for 5 circuit breakers/MSPs with accessories (length 258 mm)

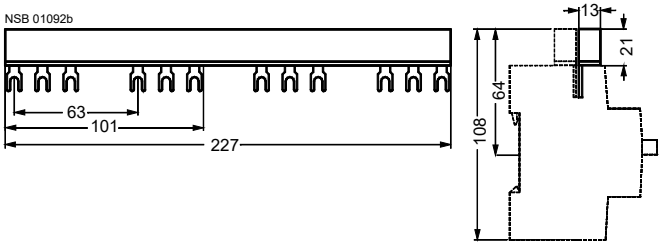

Fig. 2-70: 3RV19 15-3..

Separation distance 63 mm:
3RV19 15-3AB for 2 circuit breakers/MSPs (length 101 mm)
3RV19 15-3CB for 4 circuit breakers/MSPs (length 227 mm)

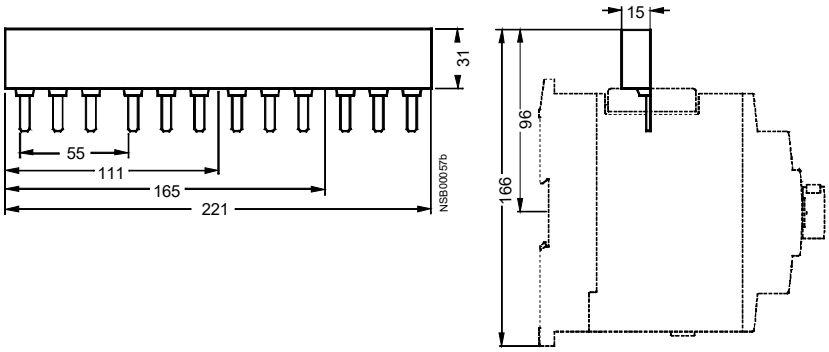

Fig. 2-71: 3RV19 35-1. (for circuit breaker/MSP, frame size S2)

Separation distance 55 mm:
3RV19 35-1A for 2 circuit breakers/MSPs (length 111 mm)
3RV19 35-1B for 3 circuit breakers/MSPs (length 166 mm)
3RV19 35-1C for 4 circuit breakers/MSPs (length 221 mm)

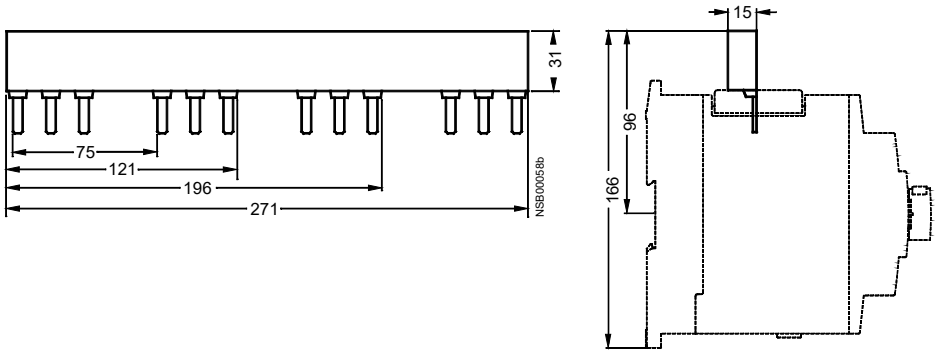

Fig. 2-72: 3RV19 35-3. (for circuit breaker/MSP, frame size S2)

Separation distance 75 mm:
3RV19 35-3A for 2 circuit breakers/MSPs with accessories (length 121 mm)
3RV19 35-3B for 3 circuit breakers/MSPs with accessories (length 196 mm)
3RV19 35-3C for 4 circuit breakers/MSPs with accessories (length 271 mm)

3-phase feeder lugs

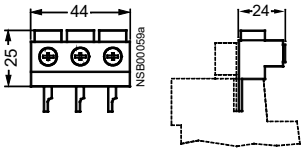

Fig. 2-73: 3RV19 15-5A
Connection from above
(for frame size S00)

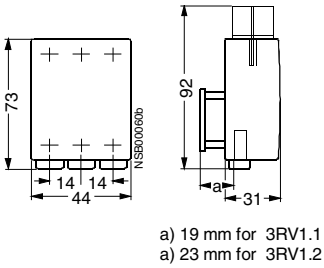

Fig. 2-74: 3RV19 15-5B
Connection from below
(frame sizes S00/S0)

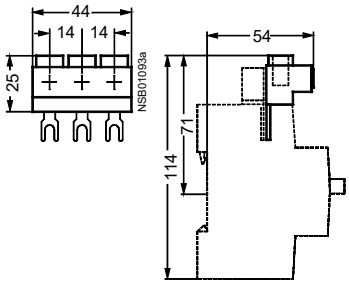

Fig. 2-75: 3RV19 25-5AB
Connection from above
(frame size S0)

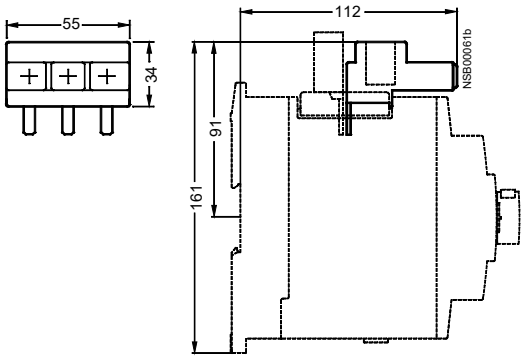

Fig. 2-76: 3RV19 35-5A
Connection from above (for frame size S2)

Connector

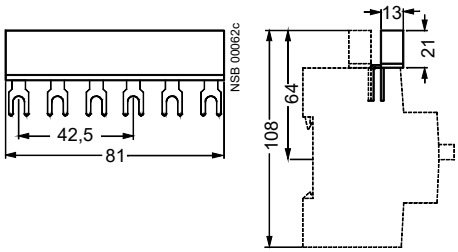

Fig. 2-77: 3RV19 15-5DB
Frame size S0 (left) and frame size S00 (right)

2.7 Technical specifications

2.7.1 General specifications

Type			3RV1. 1	3RV1. 2	3RV1. 3	3RV1. 4
Specifications						
• IEC 60 947-1, EN 60 947-1 (VDE 0660 Part 100)			Yes			
• IEC 60 947-2, EN 60 947-2 (VDE 0660 Part 101)			Yes			
• IEC 60 947-4-1, EN 60 947-4-1 (VDE 0660 Part 102)			Yes			
Frame size			S00	S0	S2	S3
Pole number			3			
Max. rated current I_{nmax} (= max. rated operational current I_e)		A	12	25	50	100
Permissible ambient temperature						
Storage/transportation		°C	-50 to +80			
Operation		°C	-20 to +70 [1])			
Permissible rated current with the following internal cubicle temperature:						
• +60 °C		%	100			
• +70 °C		%	87			
Circuit breaker in housing						
Permissible rated current with the following ambient housing temperature:						
• +35 °C		%	100			
• +60 °C		%	87			
Rated operational voltage U_e		V	690 [2])			
Rated frequency		Hz	50/60			
Rated insulation voltage U_i		V	690			
Rated impulse strength U_{imp}		kV	6			
Utilization category						
• IEC 60 947-2 (circuit breaker)			A			
• IEC 60 947-4-1 (motor starter)			AC-3			
CLASS	In acc. with IEC 60 947-4-1		10	10	10/20	10/20
Direct current short-circuit breaking capacity (time constant τ = 5 ms) (time constant t = 5 ms)						
• 1 conducting path 150 V DC		kA	10			
• 2 conducting paths in series 300 V DC		kA	10			
• 3 conducting paths in series 450 V DC		kA	10			
Power loss (Pv) per circuit breaker	I_n -> to 1.25 A	W	5	—	—	—
Depends on rated current I_n	I_n -> 1.6 A to 6.3 A	W	6	—	—	—
(Upper setting range)	I_n -> 8 A to 12 A	W	7	—	—	—
	I_n -> to 0.63 A	W	—	5	—	—
$R_{per\ conducting\ path} = P/I^2 \times 3$	I_n -> 0.8 A to 6.3 A	W	—	6	—	—
	I_n -> 8 A to 16 A	W	—	7	—	—
	I_n -> 20 A to 25 A	W	—	8	—	—
	I_n -> to 25 A	W	—	—	12	—
	I_n -> 32 A	W	—	—	15	—
	I_n -> 40 A to 50 A	W	—	—	20	—
	I_n -> to 63 A	W	—	—	—	20
	I_n -> 75 A and 90 A	W	—	—	—	30
	I_n -> to 100 A	W	—	—	—	38

Type			3RV1. 1	3RV1. 2	3RV1. 3	3RV1. 4
Shock resistance	In acc. with IEC 68 Part 2-27	g/ms	25/11 (rectangular and sine pulse)			
Degree of protection	In acc. with IEC 60 529		IP20		IP20 [3])	
Shock protection	In acc. with DIN VDE 0106 Part 100		protected against touching by fingers			
Temperature compensation	In acc. with IEC 60 947-4-1	°C	-20 to +60			
Phase loss sensitivity	In acc. with IEC 60 947-4-1		Yes			
Explosion protection	In acc. with DIN VDE 0165 and EN 50 019 (ATEX-Approval according to EU-requirement 94/9/EG)		Yes for 3RV10 (Class 10), 3RV11(Class 10)			
Isolating function	In acc. with IEC 60 947-2		Yes			
Main and emergency-stop switch features[4])	In acc. with IEC 60 204-1 (VDE 0113)		Yes			
Safe isolation between the main circuit and the auxiliary circuit required for PELV applications	In acc. with DIN VDE 0106 Part 101					
• to 400 V + 10 %			Yes			
• to 415 V+ 5 % (higher voltage on request)			Yes			
Mechanical life		Operating cycles	100,000		50,000	
Electrical life			100,000		25,000	
Max. switching frequency per hour (motor start-ups)		1/h	15			

1) Reduction in current above +60 °C
2) With molded-plastic housing 500 V
3) Connection room IP00
4) With corresponding accessories

Conductor cross-sections - main circuit

Type			3RV1.	3RV1. 2	3RV1. 3	3RV1. 4
Connection type			Screw-type terminal		Screw-type terminal with box terminal	
Terminal screw			Pozidriv size 2		Pozidriv size 2	Allen screw 4 mm
Specified tightening torque		Nm	0.8 to 1.2 Nm	2 to 2.5	3 to 4.5	4 to 6
Conductor cross-sections, 1 or 2 conductors						
Single-core		mm²	2 x (0.5 to 1.5)	2 x (1 to 2.5)	2 x (0.75 to 16)	2 x (2.5 to 16)
		mm²	2 x (0.75 to 2.5) (max. 4)	2 x (2.5 to 6)	-	-
Finely stranded with wire end ferrule:		mm²	2 x (0.5 to 1.5)	2 x (1 to 2.5)	2 x (0.75 to 16)	2 x (2.5 to 35)
		mm²	2 x (0.75 to 2.5)	2 x (2.5 to 6) (max. 10)	1 x (0.75 to 25)	1 x (2.5 to 50)
Stranded		mm²	2 x (0.5 to 1.5)	2 x (1 to 2.5)	2 x (0.75 to 25)	2 x (10 to 50)
		mm²	2 x (0.75 to 2.5) (max. 4)	2 x (2.5 to 6) (max. 10)	1 x (0.75 to 35)	1 x (10 to 70)
AWG cables, single- or multi-core		AWG	2 x (18 to 14)	2 x (14 to 10)	2 x (18 to 3)	2 x (10 to 1/0)
		AWG	-	-	1 x (18 to 2)	1 x (10 to 2/0)
Ribbon cables (number x width x depth)		mm	-	-	2 x (6 x 9 x 0.8)	2 x (6 x 9 x 0.8)
Removable box terminal [1])						
With copper busbars		mm	-	-	-	18 x 10
With lug		mm²	-	-	-	to 2 x 70
Cage Clamp connections[2])[3])[4]) (1 or 2 conn. can be connected)	Single-coil	mm²	2 x (0.25 to 2.5)	-		
	Finely stranded with wire end ferrule	mm²	2 x (0.25 to 1.5)	-		
	Finely stranded without wire end ferrule	mm²	2 x (0.25 to 2.5)	-		
	AWG cables, single-core or stranded	AWG	2 x (24 to 14)	-		
Max. outer diameter of the conductor insulation: 3.6 mm						
Permissible service position			Any In acc. with IEC 60 447 start command "I" right or above			

Auxiliary contacts

Front transverse auxiliary contacts with 1 changeover contact		**Switching capacity with different voltages**				
Rated operational voltage U_e	AC voltage	V AC	24	230	400	690
Rated operational current I_e/AC-15		A	4	3	1.5	0.5
Rated operational current I_e/AC-12 ≙ I_{th}		A	10	10	10	10
Rated operational voltage U_e	DC voltage *L/R* 200 ms	V DC	24	110	220	
Rated operational current I_e/DC-13		A	1	0.22	0.1	
Front transverse electronically optimized auxiliary contacts with 1 changeover contact						
Rated operational voltage U_e	AC voltage	V AC	3 to 60			
Rated operational current I_e/AC-14		mA	1 to 300			
Rated operational voltage U_e	DC voltage *L/R* 200 ms	V DC	3 to 60			
Rated operational current I_e/DC-13		mA	1 to 300			
Front transverse auxiliary contacts with 1 NO + 1 NC, 2 NO contacts						
Rated operational voltage U_e	AC voltage	V AC	24	230		
Rated operational current I_e/AC-15		A	2	0.5		
Rated operational current I_e/AC-12 ≙ I_{th}		A	2.5	2.5		
Rated operational voltage U_e	DC voltage *L/R* 200 ms	V DC	24	48	60	
Rated operational current I_e/DC-13		A	1	0.3	0.15	
Side-mount auxiliary contacts with 1 NO + 1 NC, 2 NO, 2 NC, 2 NO + 2 NC and alarm switch						
Rated operational voltage U_e	AC voltage	V AC	24	230	400	690
Rated operational current I_e/AC-15		A	6	4	3	1
Rated operational current I_e/AC-12 ≙ I_{th}		A	10	10	10	10
Rated operational voltage U_e	DC voltage *L/R* 200 ms	V DC	24	110	220	440
Rated operational current I_e		A	2	0.5	0.25	0.1

1) After the box terminals have been removed, lug or busbar connections are also possible.
2) For notes on the Cage Clamp system, see page 1-19.
3) Use an insulation stop for a conductor cross-section ≤ 1 mm².
4) Associated opening tool 8WA28 03/8WA28 04

2.7.2 Permissible rating of approved devices for North America, Ⓤ Ⓒ

In North America the 3RV1 is not approved as a “circuit breaker” and is commonly known as a Motor Starter Protector (MSP). The SIRIUS 3RV1 series are approved for Ⓤ/Ⓒ and can also be used in acc. with UL 508 and C22.2 No.14 with a contactor as a Type F combination starter. You can use these MSPs as a "Manual Motor Starter" for "Group Fusing" or for "Group Installation" or as a "Combination Motor Controller **Type E**".

3RV1 as a "Manual Motor Starter"
When the 3RV1 is used as a "Manual Motor Starter", it is always with a device for short-circuit protection (upstream short-circuit protection device). Any fusible link (“group fusing”) or UL 489 listed circuit breaker (“group installation”) can be used as a device for short-circuit protection. The type and size are selected in acc. with the American NFPA 70 standard, Article 430-53 (c) for adequate protection of supply wiring.
Accreditation was issued under the following file numbers with the listed data:
Ⓤ File No. E47705, Product Class NLRV
Ⓒ Master Contract 165071, Product Class 3211 05

Motor Starter Protector		Hp rating		Rated current	**To 240 V AC**	**To AC 480 Y/277 V**	**To AC 600 Y/347 V**
		For FLA max.		I_n	I_{cu} [1]	I_{cu} [1]	I_{cu} [1]
Type	V	1-phase	3-phase	A	kA	kA	kA
				0.11 to 2	65	65	10
3RV10 11				2.5	65	65	10
3RV16 11-0BD10	115	½	-	3.2	65	65	10
	200	1½	3	4	65	65	10
Frame size S00	230	2	3	5	65	65	10
	460	-	7½	6.3	65	65	10
FLA max. 12 A, 600 V	575/600	-	10	8	65	65	10
				10	65	65	10
				12	65	65	10
				0.11 to 3.2	65	65	30
3RV10 21/3RV11 21				4	65	65	30
3RV13 21				5	65	65	30
	115	2	-	6.3	65	65	30
Frame size S0	200	3	7½	8	65	65	30
	230	5	7½	10	65	65	30
FLA max. 25 A, 600 V	460	-	15	12.5	65	65	30
	575/600	-	20	16	65	65	30
				20	65	65	30
				22	65	65	30
				25	65	65	30
3RV10 31/3RV11 31				11 to 16	65	50	25
3RV13 31				20	65	65	25
	115	3	-	25	65	65	25
Frame size S2	200	7½	15	32	65	65	25
	230	10	20	40	65	65	25
FLA max. 50 A, 600 V	460	-	40	45	65	65	25
	575/600	-	50	50	65	50	25
				11 to 16	65	65	30
3RV10 41/3RV10 42				20	65	65	30
3RV11 42	115	10	-	25	65	65	30
3RV13 41/3RV13 42	200	20	30	32	65	65	30
	230	20	40	40	65	65	30
Frame size S3	460	-	75	50	65	65	30
	575/600	-	100	63	65	65	30
FLA max. 99 A, 600 V				75	65	65	30
				90	65	65	30
				100 (99)	65	65	30

Hp rating = output power in horse power (maximum motor power)
FLA = full load amps

1) Corresponds to "short circuit breaking capacity" in acc. with UL

3RV10.A as "Combination Motor Controller Type E"

Since July 16th 2001, 1 inch air clearance and 2 inch creepage distance is required for a "Combination Motor Controller Type E" on the input side with UL 508 The 3RV10 in frame sizes S0 and S3 are therefore approved with the terminal blocks listed below in acc. with UL 508.

The 3RV10 in frame size S2 already complies with the required air clearance and creepage distance as a basic unit. These extended air clearances and creepage distances are not required for CSA. The terminal blocks are therefore not required for use as a "Combination Motor Controller Type E" in acc. with CSA. 3RV10's are certified as "Combination Motor Controller **Type E**" under the following file numbers with the listed data:

Ⓤ File No. E156943, Product Class NKJH

Ⓒ Master Contract 165071, Product Class 3211 08

Motor Starter Protector		Hp rating		Rated current	**To 240 V AC**	**To AC 480 Y/277 V**	**To AC 600 Y/347 V**
		For FLA max.		I_n	I_{cu} 1)	I_{cu} 1)	I_{cu} 1)
Type	V	1-phase	3-phase	A	kA	kA	kA
				0.11 to 1.6	50	50	30
3RV10 21				2	50	50	30
+ 3RV19 28-1H[2]	115	2	—	2.5	50	50	30
	200	3	7½	3.2	50	50	30
Frame size S0	230	3	7½	4	50	50	30
	460	—	15	5	50	50	30
FLA max. 22 A, 480 V	575/600	—	10	6.3	50	50	30
12.5 A, 600 V				8	50	50	30
				10	50	50	30
				12.5	50	50	30
				16	50	50	—
				20	50	50	—
				22	50	50	—
				11 to 16	50	50	25
3RV10 31				20	50	50	25
	115	3	—	25	50	50	25
Frame size S2	200	7½	15	32	50	50	25
	230	10	20	40	50	50	25
FLA max. 50 A, 600 V	460	—	40	45	50	50	25
	575/600	—	50	50	50	50	25
3RV10 41				11 to 16	50	50	30
+ 3RV1946-4GA07 [2]				20	50	50	30
	115	10	—	25	50	50	30
Frame size S3	200	20	30	32	50	50	30
	230	20	40	40	50	50	30
FLA max. 100 A, 480V	460	—	75	50	50	50	30
75 A, 600 V	575/600	—	75	63	50	50	30
				75	50	50	30
				90	50	50	—
				100	50	50	—

Hp rating = output power in horse power (maximum motor power)

FLA = full load amps

1) Corresponds to "short circuit breaking capacity" in acc. with UL

2) Not required by CSA

Rating of the control switches and alarm switches

		Side-mount auxiliary contact with 1 NO + 1 NC, 2 NO, 2 NC, 2 NO + 2 NC and alarm switch	**Transverse auxiliary contact with 1 changeover contact**	**Transverse auxiliary contact with 1 NO + 1 NC, 2 NO**
Max. rated voltage				
• In acc. with NEMA Ⓤ	V AC	600	600	240
• In acc. with NEMA Ⓒ	V AC	600	600	240
Continuous current	A	10	5	2.5
Switching capacity		A600	B600	C300
		Q300	R300	R300

2.7.3 Short-circuit breaking capacity I_{cn} in acc. with IEC 60 947-2

The table lists the rated limit short-circuit breaking capacity I_{cu} and the rated service short-circuit breaking capacity I_{cs} of 3RV1 circuit breakers with different inception voltages and related to the rated current I_n of the circuit breakers.
The incoming supply of the circuit breakers is permissible at the upper or lower terminals irrespective of the rating.
If the short-circuit current at the installation location exceeds the rated short-circuit breaking capacity of the circuit breaker specified in the table, a backup fuse is required. You can also use an upstream circuit breaker with a limiter function.
The maximum rated current of this backup fuse is specified in the tables. The rated short-circuit breaking capacity specified for the fuse then applies.
Circuit breaker/contactor combinations for short-circuit currents of up to 50 kA can be used as fuseless load feeders in acc. with Part 5.

Circuit breaker	Rated current I_n	**To 240 V AC [2]**			**To 400 V AC [2]/415 V [3]**			**To 440 V AC [2]/460 V [3]**			**To 500 V AC [2]/525 V [3]**			**To 690 V AC [2]**		
		I_{cu}	I_{cs}	Max. Fuse (gL/gG)	I_{cu}	I_{cs}	Max. Fuse (gL/gG)	I_{cu}	I_{cs}	Max. Fuse (gL/gG)	I_{cu}	I_{cs}	Max. Fuse (gL/gG)	I_{cu}	I_{cs}	Max. Fuse (gL/gG)
Type	A	kA	kA	A	kA	kA	A	kA	kA	A	kA	kA	A	kA	kA	A
3RV10, 3RV16 11-0BD10 frame size S00	0.16 to 0.8	100	100	•	100	100	•	100	100	•	100	100	•	100	100	•
	1	100	100	•	100	100	•	100	100	•	100	100	•	100	100	•
	1.25	100	100	•	100	100	•	100	100	•	100	100	•	2	2	20
	1.6	100	100	•	100	100	•	100	100	•	100	100	•	2	2	20
	2	100	100	•	100	100	•	100	100	•	10	10	35	2	2	35
	2.5	100	100	•	100	100	•	100	100	•	10	10	35	2	2	35
	3.2	100	100	•	100	100	•	50	10	40 [1]	3	3	40	2	2	40
	4	100	100	•	100	100	•	50	10	40 [1]	3	3	40	2	2	40
	5	100	100	•	100	100	•	50	10	50 [1]	3	3	50	2	2	50
	6.3	100	100	•	100	100	•	50	10	50 [1]	3	3	50	2	2	50
	8	100	100	•	50	12.5	80 [1]	50	10	63 [1]	3	3	63	2	2	63
	10	100	100	•	50	12.5	80 [1]	10	10	63	3	3	63	2	2	63
	12	100	100	•	50	12.5	80 [1]	10	10	80	3	3	80	2	2	80
3RV1. 2 Frame size S0	0.16 to 1.25	100	100	•	100	100	•	100	100	•	100	100	•	100	100	•
	1.6	100	100	•	100	100	•	100	100	•	100	100	•	100	100	•
	2	100	100	•	100	100	•	100	100	•	100	100	•	8	8	25
	2.5	100	100	•	100	100	•	100	100	•	100	100	•	8	8	25
	3.2	100	100	•	100	100	•	100	100	•	100	100	•	8	8	32
	4	100	100	•	100	100	•	100	100	•	100	100	•	6	3	32
	5	100	100	•	100	100	•	100	100	•	100	100	•	6	3	32
	6.3	100	100	•	100	100	•	100	100	•	100	100	•	6	3	50
	8	100	100	•	100	100	•	50	25	63 [1]	42	21	63	6	3	50
	10	100	100	•	100	100	•	50	25	80 [1]	42	21	63	6	3	50
	12.5	100	100	•	100	100	•	50	25	80 [1]	42	21	80	6	3	63
	16	100	100	•	50	25	100 [1]	50	10	80 [1]	10	5	80	4	2	63
	20	100	100	•	50	25	125 [1]	50	10	80 [1]	10	5	80	4	2	63
	22	100	100	•	50	25	125 [1]	50	10	100 [1]	10	5	80	4	2	63
	25	100	100	•	50	25	125 [1]	50	10	100 [1]	10	5	80	4	2	63
3RV1. 3 Frame size S2	16	100	100	•	50	25	100 [1]	50	25	100 [1]	12	6	63	5	3	63
	20	100	100	•	50	25	125 [1]	50	25	100 [1]	12	6	80	5	3	63
	25	100	100	•	50	25	125 [1]	50	15	100 [1]	12	6	80	5	3	63
	32	100	100	•	50	25	125 [1]	50	15	125 [1]	10	5	100	4	2	63
	40	100	100	•	50	25	160 [1]	50	15	125 [1]	10	5	100	4	2	63
	45	100	100	•	50	25	160 [1]	50	15	125 [1]	10	5	100	4	2	63
	50	100	100	•	50	25	160 [1]	50	15	125 [1]	10	5	100	4	2	80

Circuit breaker	Rated current I_n	To 240 V AC [2])			To 400 V AC [2])/415 V [3])			To 440 V AC [2])/460 V [3])			To 500 V AC [2])/525 V [3])			To 690 V AC [2])		
		I_{cu}	I_{cs}	Max. Fuse (gL/gG)	I_{cu}	I_{cs}	Max. Fuse (gL/gG)	I_{cu}	I_{cs}	Max. Fuse (gL/gG)	I_{cu}	I_{cs}	Max. Fuse (gL/gG)	I_{cu}	I_{cs}	Max. Fuse (gL/gG)
Type	A	kA	kA	A	kA	kA	A	kA	kA	A	kA	kA	A	kA	kA	A
3RV1. 41	40	100	100	•	50	25	125 [1])	50	20	125 [1])	12	6	100	6	3	63
Frame size S3	50	100	100	•	50	25	125 [1])	50	20	125 [1])	12	6	100	6	3	80
	63	100	100	•	50	25	160 [1])	50	20	160 [1])	12	6	100	6	3	80
	75	100	100	•	50	25	160 [1])	50	20	160 [1])	8	4	125	5	3	100
	90	100	100	•	50	25	160 [1])	50	20	160 [1])	8	4	125	5	3	125
	100	100	100	•	50	25	160 [1])	50	20	160 [1])	8	4	125	5	3	125
3RV1.42	16	100	100	•	100	50	•	100	50	•	30	15	80	12	7	63
Frame size S3 With increased switching capacity	20	100	100	•	100	50	•	100	50	•	30	15	80	12	7	63
	25	100	100	•	100	50	•	100	50	•	30	15	80	12	7	63
	32	100	100	•	100	50	•	100	50	•	22	11	100	12	7	63
	40	100	100	•	100	50	•	100	50	•	18	9	160	12	6	80
	50	100	100	•	100	50	•	100	50	•	15	7.5	160	10	5	100
	63	100	100	•	100	50	•	70	50	200 [1])	15	7.5	160	7.5	4	100
	75	100	100	•	100	50	•	70	50	200 [1])	10	5	160	6	3	125
	90	100	100	•	100	50	•	70	50	200 [1])	10	5	160	6	3	160
	100	100	100	•	100	50	•	70	50	200 [1])	10	5	160	6	3	160

• No backup fuse required because it is short circuit-proof up to 100 kA.

Short circuit-proof up to min. 50 kA.

1 A backup fuse is only required if the short-circuit current at the installation location is > I_{cu}.

2 10 % overvoltage

3 5 % overvoltage

2.7.4 Limiter function with standard devices for 500 V AC and 690 V AC in acc. with IEC 60 947-2

The table lists the rated limit short-circuit breaking capacity I_{cu} and the rated service short-circuit breaking capacity I_{cs} with an upstream standard circuit breaker that fulfills the limiter function at 500 V AC and 690 V AC.
The short-circuit breaking capacity can be significantly increased using the upstream standard circuit breaker with a limiter function.
The circuit-breaker connected downstream, should be set to the rated current of the load. Be sure when you set up circuit breaker combinations to note to the distances between the grounded parts and the distances between the circuit breakers.
Make sure that the cabling between the circuit breakers is short circuit-proof. You can mount the circuit breakers side by side.

Standard circuit breaker with limiter function	Standard circuit breaker		**To 500 V AC** [1]/ **525 V** [2]		**To 690 V AC** [1]	
Type		Rated current I_n	I_{cu}	I_{cs}	I_{cu}	I_{cs}
Rated current I_n	Type	A	kA	kA	kA	kA
3RV13 21-4DC10	3RV10 2	to 1	•	•	•	•
Frame size S0	Frame size S0	1.25	•	•	•	•
I_n = 25 A		1.6	•	•	•	•
		2	•	•	50	25
		2.5	•	•	50	25
		3.2	•	•	50	25
		4	•	•	50	25
		5	•	•	50	25
		6.3	•	•	50	25
		8	100	50	20	10
		10	100	50	20	10
		12.5	100	50	20	10
		16	100	50	20	10
		20	100	50	20	10
		22	100	50	20	10
		25	100	50	20	10
3RV13 31-4HC10	3RV10 3	16	100	50	50	25
Frame size S2	Frame size S2	20	100	50	50	25
I_n = 50 A		25	100	50	50	25
		32	100	50	50	25
		40	100	50	50	25
		50	100	50	50	25
3RV13 41-4HC10	3RV10 4	32	100	50	50	25
Frame size S3	Frame size S3	40	100	50	50	25
I_n = 50 A		50	100	50	50	25
3RV13 41-4MC10	3RV10 4	50	100	50	50	25
Frame size S3	Frame size S3	63	100	50	50	25
I_n = 100 A		75	100	50	50	25
		90	100	50	50	25
		100	100	50	50	25

- No backup fuse required because it is short circuit-proof up to 100 kA.
  Short circuit proof up to 100 kA.

1) 10 % overvoltage
2) 5 % overvoltage

2.7.5 Characteristics

You can obtain the characteristics for all the setting under
https://support.industry.siemens.com/cs/ww/en/ps/16027/char

2.7.6 Installation guidelines

Rules for installing circuit breakers/MSPs

When mounting circuit breakers/MSPs, the following clearance must be maintained to grounded or live parts.

Circuit breaker/MSP			Clearance to grounded or live parts		
			Y	X	side Z
Type	Frame size		mm	mm	mm
3RV1. 1	S00	to 690 V	20	70	9
3RV1. 2	S0	to 500 V	30	90	9
		to 690 V	50	90	30
3RV1. 3	S2	to 690 V	50	140	10
3RV1. 4	S3	to 240 V	50	167	10
		to 440 V	70	167	10
		to 500 V	110	167	10
		to 690 V	150	167	30

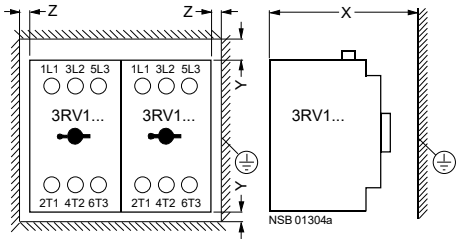

Rules for installing circuit breakers/MSPs with limiter function

Standard installation for frame sizes S0, S2 and S3

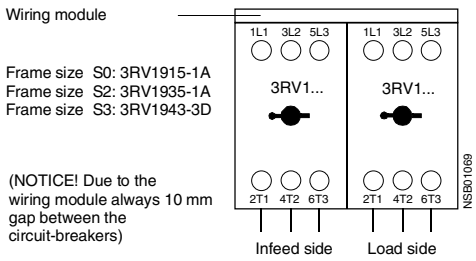

Installation of frame size S0 for the setting ranges 5.5 - 8 to 20 - 25 A at 690 V

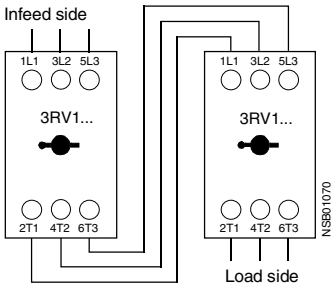

Clearance to grounded or live parts for limiter function in mm

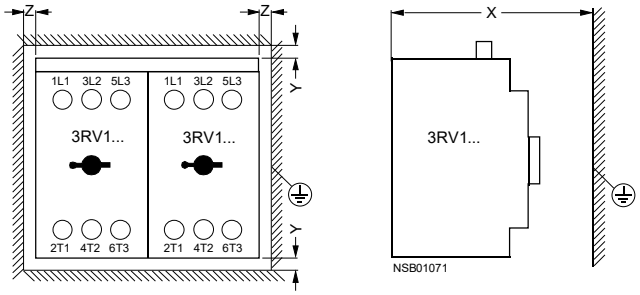

U_e [V]		S0	S2	S3
500	Z (side)	10	10	10
	Y	40	50	110
	X	90	140	167
690	Z (side)	30	10	30
	Y	50	50	150
	X	90	140	167

2.8 Application notes for the use of 3RV1 downstream from frequency converters/inverter with pulsing voltage

The use of thermal motor protection devices downstream from frequency converters/inverters with pulsing voltage results in influences on the switching devices that could lead to the nuisance tripping of those devices. In the following examples, practical guidelines are provided for such applications.

2.8.1 Influences of high frequency currents upon the thermal overload release

The thermal overload release on the circuit breakers/MSPs and overload relays generally consists of a bimetal strip and a heating winding, that heat up when motor current runs through them. The excessive bending of the bimetal strip (such as with high motor current) results in the breaking of the motor circuit.
This style of thermal overload release is set for 50 Hz AC current. So that the trip point is also only for currents which have the same thermal effect (r.m.s. value) or are similar to the set current in the required range of the standard. This would be the case for AC current from 0 to 400 Hz and for DC current.

With high frequency currents, as occurs downstream of converters, the bimetal strip becomes increasingly hot. This can be attributed to eddy current loses induced by harmonics and to the Skin effect in the heater windings. Both lead to the tripping of the overload release even with lower currents (nuisance tripping!).

The influences are dependent on the frequency of the current. The higher the frequency of the converter and the lower the adjustable range/rated current, the higher the reduction of the trip current.

In order for the trip limits to once again fall into the standard range, the overload release setting needs to be corrected. The following table shows the correction factors for the various setting ranges depending on the pulse frequency of the converters.

Setting range / Rated current	Pulse frequency [kHz]								
	0	2	4	6	8	10	12	14	16
3.2 - 50 A	1.00	1.07	1.12	1.16	1.18	1.19	1.21	1.22	1.23
0.5 - 2.5 A	1.00	1.08	1.13	1.17	1.21	1.24	1.26	1.28	1.29
0.32 - 0.4 A	1.00	1.09	1.15	1.21	1.25	1.29	1.33	1.35	1.37
0.16 - 0.25 A	1.00	1.10	1.17	1.24	1.28	1.33	1.38	1.42	1.46

Table 2-20: Correction factors for the various setting ranges

Example

Circuit breaker/MSP with the setting range of 1.1 - 1.6 A behind a frequency converter with a pulse frequency of 8 kHz and a r.m.s. value of the motor current at rated load: 1.2 A.

Set to: 1.2 A x 1.21 = **1.45 A**

This compensates for the influences of the high frequency current. The trip current lays within the standard range.

Attention
Harmonics can cause the r.m.s. value of the motor current to be higher than the rated motor current. In this case nuisance tripping can still occur despite the use of the correction factors.

In order to remedy this, the r.m.s. value of the motor current at rated load needs to be ascertained and used as the basis current for the above described correction procedure. Only measuring instruments suitable to ascertain the values are those that can measure the true r.m.s. value up to the frequencies that appear and can also reproduce them. Devices well suitable for this would be hot-wire instruments for example. Moving-iron measuring elements are in fact r.m.s. measuring instruments, but can only be used for frequencies up to 1 kHz and therefore can't be used in most of the above described cases. Common instruments such as a multimeter or a clip-on ammeter are not suitable for measuring in the above described cases.

2.8.2 Other possible influences

a) Capacitive leakage currents
Despite adjusting the setting, nuisance tripping can still occur in individual installations. Extensive investigations have shown that installations with pulsing voltage can also lead to other effects that lower the trip current of the overload release, such as an increase of current flowing through the trip element.

A practical example:
Consider an installation that is fed from an inverter with 3 kHz pulse frequency and has motors connected with a 80 m long cable. An analysis of the actual flowing current shows a ripple amplitude of the motor current with very high frequency currents (up to 150 kHz) and a peak value of 1.5 A. The influence on the thermal overload release is still significantly higher than described in example 1 at these frequencies. Moreover, capacitive leakage currents appear in this installation due to the length of the cable and the high frequency. These increase the current that flows through the trip element and can lead to nuisance tripping.

In cases where high frequency currents of well over 16 kHz appear and the procedure described in example 1 no longer leads to success, then you can proceed as follows. In an overload free operation of the motor the overload release needs to be set so high that the unit will not trip. After that the motor needs to run for about 1.5 h at full load. Then the overload release needs to be reduced to the trip limit and then set about 10 % higher than

the trip limit. That will compensate for the influences of the installation. You can then can use the achieved value as a correction factor for similar installations.

b) Rotational speed control of motors with a response characteristic controlled Frequency converter

With the adjustment of the linear voltage-frequency-characteristic and a continual increase in current (see for example operating instructions Micromaster parameter P077 and P078), decreased rotational speed (< 50 Hz) and constant load torque can lead to the increase of the motor current. With this adjustment the frequency converters output voltage is not reduced to the same scale as the output frequency. If this results in nuisance tripping and can't be compensated for by a higher setting of the trip release (watch for motor overload), then minimizing of the current increase or a readjustment to a quadratic voltage-frequency-characteristic could provide a remedy.

3

3RT1 Contactors/ 3RH1 Control relays

Section	Subject	Page
3.1	**Specifications/regulations/approvals**	**3-3**
3.1.1	Utilization categories	3-3
3.1.2	Positively driven operation	3-7
3.1.3	Safe isolation	3-7
3.1.4	Explanation of terms	3-9
3.2	**Device description**	**3-10**
3.2.1	Coil systems S00 to S3	3-12
3.2.2	Short-circuit protection for SIRIUS contactors	3-13
3.2.3	Operation	3-14
3.2.3.1	General information	3-14
3.2.3.2	Contact reliability	3-15
3.2.3.3	Electrical service life	3-16
3.2.3.4	Ambient temperature	3-20
3.3	**Application and areas of use**	**3-23**
3.3.1	3RT10 contactors with 3 main contacts for switching motors	3-23
3.3.2	3RT14 contactors with 3 main contacts for switching resistive loads (AC-1)	3-24
3.3.3	3RT13 and 3RT15 contactors with 4 main contacts	3-25
3.3.4	3RT16 capacitor contactors	3-26
3.3.5	Contactors with an extended operating range	3-28
3.3.5.1	Contactors with series resister (3RH11...-0LA0/3RT10...-0LA0)	3-28
3.3.5.2	Contactors with electronic control module frame sizes S0 to S3 (3RT10..-.X40-0LA2)	3-30
3.3.5.3	Contactors with an extended operating range (3RH1122-2K.40, 3RT1017-2K.4., 3RT102.-3K.40)	3-31
3.3.6	3RH1 control relays	3-32
3.3.7	3RT10 contactor relays for switching motors (interface) and 3RH11 control relays for switching auxiliary circuits	3-33

Section	Subject	Page
3.3.8	3RA13 Contactor combinations for reversing	3-35
3.3.9	3RA14 Wye-delta combinations	3-46
3.4	**Accessories**	**3-54**
3.4.1	Attachable auxiliary switches for extending the auxiliary contacts	3-57
3.4.1.1	Terminal markings of the contactors frame sizes S00 to S3	3-62
3.4.1.2	Terminal markings of the contactors and control relays combined with auxiliary switch blocks	3-64
3.4.1.3	Auxiliary switches that can be attached to 3RH1 control relays	3-66
3.4.2	Time-delay auxiliary switches	3-69
3.4.2.1	Frame size S00 (3RT1916-2E, -2F, -2G)	3-69
3.4.2.2	Frame sizes S0 to S3 (3RT1926-2E, -2F, -2G)	3-71
3.4.3	Solid-state time relay blocks with semiconductor output	3-72
3.4.3.1	Frame size S00 (3RT1916-2C, -2D)	3-73
3.4.3.2	Frame sizes S0 to S3 (3RT19 26-2C, -2D)	3-74
3.4.4	Additional load module (3RT1916-1GA00)	3-75
3.4.5	Coupling element for frame sizes S0 to S3 (3RH1924-1GP11)	3-76
3.4.6	Surge suppression	3-78
3.4.7	Other accessories	3-83
3.4.7.1	LED module for indicating contactor control (3RT1926-1QT00)	3-83
3.4.7.2	Auxiliary connecting lead terminal, 3-pole for frame size S3 (3RT19 46-4F)	3-83
3.4.7.3	EMC interference suppression module (3RT19 16-1P..)	3-84
3.4.7.4	Soldering pin adapter for frame size S00 (3RT19 16-4KA.)	3-85
3.4.7.5	Paralleling links (3RT19 .6-4B.31)	3-87
3.4.7.6	Sealing cover (3RT19 .6-4MA10)	3-88
3.4.7.7	Terminal covers for frame sizes S2 to S3	3-89
3.5	**Mounting and connection**	**3-91**
3.5.1	Mounting	3-91
3.5.2	Connection	3-94
3.5.3	Changing the magnetic coils	3-98
3.5.4	Changing the contact pieces	3-103
3.6	**Dimensional drawings (dimensions in mm)**	**3-106**
3.7	**Technical data**	**3-122**

3.1 Specifications/regulations/approvals

Regulations

The following regulations apply to 3RT **contactors**:
- IEC 60 947-1, EN 60 947-1 (VDE 0660 Part 100), which includes the general specifications for low-voltage switching devices.
- IEC 60 947-4-1, EN 60 947-4-1 (VDE 0660 Part 102), which contains, in particular, the requirements for contactors and motor starters.

The following regulations apply to 3RH **contactor relays**:
- IEC 60 947-1, EN 60 947-1 (VDE 0660 Part 100), which includes the general specifications for low-voltage switching devices.
- IEC 60 947-5-1, EN 60 947-5-1 (VDE 0660 Part 200) which includes, in particular, the requirements for control equipment and switching elements for the control, signaling, locking, etc. of switchgear and controlgear.

Standards

The following standards apply to the terminal markings of the contactors:
- EN 50 012: terminal markings and identification numbers for auxiliary contact elements of particular contactors (also applies to contactors with a built-in auxiliary switch block)
- EN 50 011: terminal markings, identification numbers, and identification letters for particular auxiliary contactors (also applies to auxiliary contactors with a built-in auxiliary switch block)
- EN 50 005: terminal markings and identification numbers, general rules

Approvals/ test reports

Confirmation of approvals and test certificates and characteristics can be obtained on the Internet/intranet:
https://support.industry.siemens.com/cs/ww/en/ps/16027/cert

Shock protection

The shock protection provided is in acc. with DIN VDE 0106, Part 100.

3.1.1 Utilization categories

In acc. with EN 60 947-4-1, the purpose of the contactors and the stress placed on them is indicated by the utilization category together with details of the rated operational current or motor output and the rated voltage.

The following tables list the definitions of the utilization categories for low-voltage switching devices and contactors from IEC 60 947 (VDE 0660).
The rated operational voltages for the various utilization categories are listed in the low-voltage switching devices catalog.

Utilization category for AC voltages

AC	Utilization category for AC voltages	Switching capacity I/I_e		Electrical service life I/I_e	
		On	Off	On	Off
AC-1	Non-inductive load or a slightly inductive load	1.5	1.5	1	1
AC-2	Slip ring motors: switch on, switch off	4	4	2.5	2.5
AC-3	Squirrel-cage motors: switch on, switch off during the run	10	8	6	1
AC-4	Squirrel-cage motors: switch on, plugging or reversing, inching	12	10	6	6
AC-6b	Switching of capacitor banks	—		—	

Table 3-1: Utilization categories, test conditions for AC voltage

Definition of AC-1 to AC-6b

The definitions of the utilization categories AC-1 to AC-6b for main circuits can be found in the relevant regulations.
The main areas of application for contactors are:

- AC-3 operation: switching of squirrel-cage motors
- AC-1 operation: switching of resistive loads
- AC-4 operation: plugging, reversing, inching
- AC-6b operation: switching of capacitor banks

Test conditions

Test conditions for the various utilization categories:

- In AC-1 operation, the contactor must be able to switch 1.5 times the rated operational current on and off.
- In AC-3 operation, the starting currents of the motors must be controlled. In other words, the contactor must be able to switch on 10 times the rated operational current (I_e), and switch off 8 times the I_e.
- In AC-4 operation, the contactor must be able to switch off or on 12 times the rated operational current (I_e) and 10 times the I_e. This represents extremely high stress for contactors because the high starting currents of the motors have to be switched off.
- In AC-6b operation, the rated values of capacitor loads may be derived from capacitor switching tests or on the basis of existing experience and research.

The breaking current is decisive in calculating the electrical service life:

- In AC-1 and AC-3 operation, 1 x I_e must be assumed.
- In AC-4 operation, 6 x I_e must be assumed because the contactor also has to switch off the motor during startup.

Utilization category for DC voltages

DC	Utilization category for DC voltages	Switching capacity I/I_e Make/break	Time constant L/R (ms)
DC-1	Non-inductive load or a slightly inductive load, resistance furnaces	1.5	1
DC-3	Shunt motors: switching on, plugging, reversing, inching	4	2.5
DC-5	Series motors: switching on, plugging, reversing, inching	4	15

Table 3-2: Utilization categories, test conditions for DC voltages

Definition of DC-1 to DC-5

The definitions of the utilization categories DC-1 to DC-6 apply to main circuits for switching DC voltage.
The main areas of application for contactors are:
- DC-3/DC-5 operation: switching of shunt or series motors
- DC-1 operation: switching of resistive loads, resistance furnaces

Note
In the information on DC switching capacity in previous documents, the utilization categories DC-2 and DC-4 correspond to the current utilization categories DC-3 and DC-5.

Utilization category for AC voltage (auxiliary contact elements)

		Switching capacity		
AC	Utilization category for AC voltage (auxiliary contact elements)	Make	Break	
		I/I_e	I/I_e	$\cos\varphi$
AC-12	Control of resistive load and semi-conductor load in the input circuits of optocouplers	1	1	0.9
AC-14	Control of a small electromagnetic load (max. 72 VA)	6	1	0.3
AC-15	Control of an electromagnetic load (greater than 72 VA)	10	1	0.3

Table 3-3: Utilization categories, test conditions for AC voltage (auxiliary contact elements)

Definition of AC-12 to AC-15

IEC 60 947-5-1/EN 60 947-5-1 (VDE 0660 Part 200) contains the definitions of the utilization categories AC-12 to AC-15 for switching elements for the control, signaling, locking, etc. of switchgear and controlgear.
The main areas of application for auxiliary contactors are:
- AC-14/AC-15 operation: switching of contactor coils, solenoid valves, for example.
- AC-14/AC-12 operation: switching of resistive loads, for example.

Rated operational currents

The rated operational currents for the various utilization categories are listed in the low-voltage switching devices catalog. The test specifications given in the table for each utilization category represent the scale for the making and breaking capacity of the auxiliary contacts.

Example

3RT1016 contactor:
I_e/AC-15 of the auxiliary contact: 6 A/230 V
Making capacity: 10 x I_e/AC-15 = 60 A

- This enables the contactor coil with the current consumption of 60 A to be switched on.
- Only the holding current is decisive for switching off the contactor coil.

According to regulations, the auxiliary contact must normally be able to switch off the rated operational current.

Utilization category for DC voltage (auxiliary contact elements)

		Switching capacity		
DC	Utilization category for DC voltage (auxiliary contact elements)	Make	Break	
		I/I_e	I/I_e	L/R (ms)
DC-12	Control of resistive load and semiconductor load in the input circuits of optocouplers	1	1	1
DC-13	Control of solenoids	1	1	300

Table 3-4: Utilization categories, test conditions for DC voltage (auxiliary contact elements)

Definition of DC-12 and DC-13

The DC voltage switching capacity of auxiliary contacts is defined in utilization categories DC-12 and DC-13.
The main areas of application for contactors are:

- DC-12: switching of resistive loads (typical application)
- DC-13: switching of inductive loads, such as contactor coils and solenoid valves

In DC operation, the difference in stress is also determined by the L/R time constant. This must be specified by the user.

3.1.2 Positively driven operation

Regulations

The regulations for positively driven operation are:

- For contactors — IEC 60 947-4-1, Appendix H (draft 17B/996/DC)
- For control relays — IEC 60 947-5-1, Amendment 2, Annex L, edition 10.1999
- ZH 1/457 — Safety rules for controllers on power-operated presses
- SUVA — Accident prevention guidelines of the Schweizer Unfallversicherungsanstalt (Swiss institute for accident insurance)

SIRIUS contactors comply with these regulations.

Definition: positively driven contacts

Positively driven contacts are contacts that are mechanically connected with one another in such a way that the NC contacts and NO contacts can never be closed at the same time. This means ensuring that there is a distance between the contacts of at least 0.5 mm throughout the entire service life of the contactor, even when there is a defect, such as when the contact has been wrongly welded (ZH 1/457).

Positively driven operation in the case of 3RT1/3RH11

Positively driven operation occurs in:
- 3RT101. contactors and 3 RH11 auxiliary contactors in frame size S00 in both the basic unit and in the auxiliary switch block and also between the basic unit and the built-on auxiliary switch block
- 3RT1 contactors in frame sizes S0 to S3 between the main contacts and the normally closed auxiliary contacts. In other words, if the main contact is welded, the normally closed auxiliary contact will not close.

Positively driven operation does not occur in the case of:
- Electronically optimized auxiliary switch blocks in frame size S00

Positively driven operation is not compulsory for normal controllers. It is, however, imperative for protective circuits.

3.1.3 Safe isolation

The term "safe isolation" occurs in connection with safety/protective extra-low voltage (SELV/PELV) and functional extra-low voltage (FELV). Safe isolation reliably prevents voltage that is capable of causing electric shock from transferring to the safely isolated voltage (e.g. to safety extra-low voltage that is applied to or switched to the same device).
Safe isolation is also becoming increasingly important due to the more widespread use of electronic systems in high-voltage installations.

Definition

Circuits are safely isolated when a single fault does not result in a transfer of voltage from one circuit to another. Faults to be taken into account are, for example, a bent or loose conductive part, a bent soldering pin, broken winding wire, a screw that has fallen out, or a broken partition wall in a device.

Regulations

IEC 61 140 (replacing VDE 0106 Part 101/IEC 536) lists basic requirements that can be met using safe isolation between circuits in electrical equipment.
Basic requirements are, for example:
- Double or reinforced insulation
- Protective screening
- Combination of double or reinforced insulation and protective screening

The insulation must be resistant to aging throughout the expected service life.

Circuits without protective extra-low voltage or functional extra-low voltage do not require safe isolation.

Safe isolation in the case of 3RT1 and 3RH1 contactors

If the conducting paths of a contactor are operated with different voltages, the requirements for safe isolation must be met.
In the case of the 3RT1 and 3RH1 contactors, safe isolation is ensured up to the following voltage:
- The values for the safe isolation between the main power circuit and the auxiliary circuit/coil connection are found in the following tables:

I Main power circuit - Control circuit

	S00 Contactor/ Control relay	S0	S2	S3
3-pole devices	690 V*	400 V	400 V	690 V
4-pole devices	400 V	400 V	400 V	690 V
	*with unused auxiliary circuit		—	—

II Main power circuit - Auxiliary circuit

	S00	S0	S2	S3
Integ. auxiliary circuit	400 V	—	—	—
Front mount auxiliary circuit	690 V*	500 V	500 V	500 V
Side mount auxiliary circuit	No	690 V	500 V	690 V
	*4-pole auxiliary contact block			

III Control circuit - Auxiliary circuit

	S00	S0	S2	S3
Integ. auxiliary circuit	400 V	—	—	—
Front mount auxiliary circuit	690 V*	690 V	690 V	690 V
Side mount auxiliary circuit	No	500 V	690 V	690 V
	*4-pole auxiliary contact block			

IV Auxiliary circuit - Auxiliary circuit (contactor relay)

	S00	
Basic unit - contact block	690 V*	*4-auxiliary contact block
Basic unit	400 V	
Contact block	400 V	

V Main power circuit - Main power circuit

S00	S0	S2	S3
400 V	400 V	400 V	400 V

All the data are power system specifications with 10 % overvoltage in volts [V]. 400 V + 10 % corresponds to 415 V + 5 % and 500 V + 10 % corresponds to 525 V + 5 %.

Attention
In the table, the voltage that can cause electric shock and that must be safely isolated is critical. If the voltages 400 V and 24 V are to be safely isolated from one another, contactors with safe isolation up to 400 V must be used between the two points of connection used.

3.1.4 Explanation of terms

Safety extra-low voltage

Safety extra-low voltage (SELV) allows circuits with a rated voltage of up to 50 V AC or 120 V DC to be operated ungrounded. The higher voltage is safely isolated from the SELV circuits.
Safety extra-low voltage helps protect people.

Functional extra-low voltage

Functional extra-low voltage (FELV) allows circuits with a rated voltage of up to 50 V AC or 120 V DC to be operated. It does not, however, meet the requirements of safety extra-low voltage and is therefore subject to additional conditions. FELV is implemented using a ground terminal.
Functional extra-low voltage helps protect devices (e.g. programmable controllers).

PELV

PELV (protective extra-low voltage) has the same requirements as safety extra-low voltage, except for the fact that the circuit and/or exposed conductive part is/are grounded (so it is basically grounded SELV).

3.2 Device description

The SIRIUS contactors are components of the SIRIUS modular system and can therefore offer the typical benefits of SIRIUS when it comes to the selection of components and the assembly and operation of controllers and load feeders.

The SIRIUS range of contactors encompasses the following:
- Contactors for switching motors of up to 45 kW/400 V (75 HP/460 V)
- Auxiliary contactors with the contact variants 4 NO, 3 NO +1 NC, and 2 NO + 2 NC
- Contactor relays for system-specific cooperation with electronic controllers
- Contactors for particular applications:
  - Contactors with 4 main contacts
  - Capacitor switching contactors
  - Contactors for switching resistive loads up to 140 A
  - Contactors with an extended operating range
  - Contactor combinations

Frame sizes

The SIRIUS range of contactors covers everything up to 45 kW (75 HP) in 4 sizes. Each frame size covers multiple standard motor ratings:

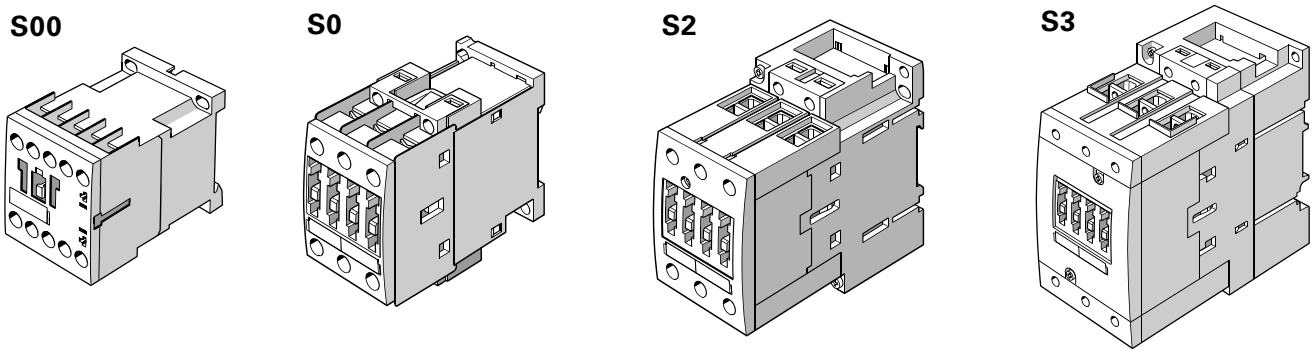

Fig. 3-1: Frame sizes of the 3RT10 contactors

Performance ranges

The following table specifies the performance ranges for the frame sizes of the 3RT10 and 3RT12 contactors:

Frame size		S00			S0				S2			S3		
Order-Number		3RT10..			3RT10..				3RT10..			3RT10..		
		15	16	17	23	24	25	26	34	35	36	44	45	46
P/AC-3/400	kW	3	4	5,5	4	5,5	7,5	11	15	18,5	22	30	37	45
up to 400 V:									up to 500 V:					
I_e/AC-3	A	7	9	12	9	12	17	25	32	40	50	65	80	95
Width	mm	45			45				55			70		

Table 3-5: Performance ranges of the 3RT10/3RT12 contactors

The following table provides an overview of the existing variants of the 3RT contactors and 3RH control relays:

Design		Frame size
3RT10 contactors	AC/DC operation To operate motors, 3-pole, up to 45 kW/400 V (75 HP/460 V) I_e/AC-1 up to 40 °C: up to 120 A up to 690 V	S00 to S3
3RT14 contactors	AC/DC operation To switch resistive loads, 3-pole I_e/AC-1 up to 40 °C: up to 140 A to 690 V	S3
3RT13 contactors	AC/DC operation, 4 main contacts (NO contacts) To switch resistive loads, up to 92 kW/400 V I_e/AC-1 up to 40 °C: up to 140 A to 690 V	S00 to S3
3RT15 contactors	AC/DC operation, 4 main contacts (2 NO contacts + 2 NC contacts) To switch three-phase induction motors up to 18.5 kW/400 V I_e/AC-3 up to 60 °C: up to 40 A to 400 V	S00 to S2
3RT16 contactors	AC operation To switch three-phase capacitors up to 50 kvar/400 V	S00, S0 and S3
3RH control relays/3RT contactors	DC operation with an extended operating range: 0.7 to 1.25 x U_S 3RT: to switch motors up to 45 kW/400 V I_e/AC-3 up to 70 °C: 95 A to 400 V 3RH: to switch auxiliary circuits I_e/AC-15/AC-14 up to 70 °C: 6 A/230 V	S00 to S3
3RT contactor relays (interface)	DC operation with an extended operating range: 0.7 to 1.25 x U_S To switch motors, 3-pole, up to 11 kW/400 V I_e/AC-3 up to 60 °C: 25 A to 400 V	S00 and S0
3RA13 contactor combinations	AC/DC operation To reverse up to 45 kW/400 V, I_e/AC-3: 95 A/400 V	S00 to S3[1)]
3RA14 contactor combinations	AC/DC operation, for wye-delta startup up to 75 kW/400 V, I_e/AC-3: 150 A/400 V	S00-S00-S00 to S3-S3-S2[1)]
3RH11 auxiliary contactors	AC/DC operation, to switch auxiliary circuits, 4-pole (basic unit) I_e/AC-15/AC-14 up to 60 °C: 6 A/230 V	S00
3RH14 latched auxiliary contactors	AC/DC operation, to switch auxiliary circuits, 4-pole (basic unit) I_e/AC-15/AC-14 up to 60 °C: 6 A/230 V	S00
3RH11 control relays (interface)	DC operation with an extended operating range, 0.7 to 1.25 x U_S to switch auxiliary circuits, 4-pole I_e/AC-15/AC-14 up to 60 °C: 6 A/230 V	S00

Table 3-6: 3RT/3RH, designs

1) Pre-wired and tested

Auxiliary contacts and snap-on accessories

- A uniform and diverse range of auxiliary switches and accessories that can be quickly upgraded and replaced is available for 3RT1 contactors up to 45 kW for various applications.
- The 3RH auxiliary contactors can be extended to form variants with a maximum of 8 poles using attachable 2 or 4-pole auxiliary switch blocks.
- Wiring kits with and without mechanical interlocking are available for putting together 3RA contactor combinations for reversing and for wye-delta starting.

The accessories are described in detail in Section 3.4, "Accessories".

3.2.1 Coil systems S00 to S3

AC coil for AC-control	• Automatic reduction from high closing power to low holding power • Short switching times
DC coil for DC-control	• Larger unit volumes (to achieve a tensile force comparable to that of an AC coil) • Closing power = holding power • Longer switching times

Table 3-7: Coil systems

3.2.2 Short-circuit protection for SIRIUS contactors

Section 3.7, "Technical specifications", has information on short-circuit protection. Fuses and circuit breakers can be used as short-circuit protective devices for the contactors.
The test criteria that apply in this case are stipulated by EN 60 947-4-1 (VDE 0660 Part 102).

Coordination types

Two types of assignment are defined in the standards that correspond to two different levels of damage.
The following applies to both types of assignment:
In the event of a short-circuit, the short-circuit protective device used must be able to disconnect the overcurrent that occurs. Persons or other parts of the system must not be put at risk.

Coordination type 1

The load feeder (e.g. motor starter) can be inoperable after each short-circuit. Damage to the contactor and the overload relay is permissible and it is only possible to continue operation after defective devices have been repaired or replaced.

Coordination type 2

After a short-circuit, there must be no damage to the load feeder devices. However, the contactor contacts can weld if they can be easily separated again without distorting the contact pieces.

"weld free"

There is information in the catalog, for weld free protection of the contactors that needs to be taken into account.

Contactors with overload relay

If contactors are combined with an overload relay, a smaller fuse should be used as specified in the controls catalog for permissible short-circuit protection fuses for motor starters.

3.2.3 Operation

3.2.3.1 General information

Degree of protection

The degree of protection of the SIRIUS contactors is IP00/IP20.

Warning
When the supply voltage and load are present, the contactor must not be actuated by pressing the contact support. It is permissible, however, to carry out tests with an extra-low test voltage (e.g. ≤ 24 V).

Mechanical life

A significant criteria for the economical use of contactors is their mechanical endurance. This is expressed in the number of operations that are possible without placing a load on the conducting path. You cannot expect too much in terms of mechanical endurance from switches that have to work with a relatively high contact load, such as isolators and circuit breakers, without neglecting their cost-efficiency. Contactors, on the other hand, are switching devices designed specifically for very high numbers of on/off operations. The following table shows you the mechanical endurance of 3RT1 contactors:

Device	Mechanical endurance
Basic unit, frame size S00	30 mill. operating cycles
Basic unit, frame size S00 with built-on auxiliary switch block	10 mill. operating cycles
Basic unit, frame sizes S0 to S3	10 mill. operating cycles
Basic units, frame sizes S00 to S3 with built-on, electronically optimized auxiliary switch block	5 mill. operating cycles

Table 3-8: Mechanical service life

When there is no arcing during switching the mechanical endurance can be optimized if low current is used (for example, 17 V/5 mA).

Display of the contactor function

The 3RT19 26 LED indicator block can be connected to the coil connections of the contactors in frame sizes S00 to S3. It indicates the status of the contactors by means of the yellow LED. The indicator block can be snapped onto the front in the opening intended for the inscription plate.
The advantage is that the LED indicator block can be used for AC/DC voltages of 24 V to 240 V and that it is protected against polarity reversal.

3.2.3.2 Contact reliability

In industrial control engineering, conventional contactor controls are often combined with electronic control systems. Combining these systems gives rise to higher demands than those when using only conventional contactor controls.
An important requirement is that the signal generators (auxiliary contacts of contactors, for example) display high contact reliability at low voltages and currents, while retaining their full switching capacity at high voltages.

Switching with auxiliary contacts (≤ 110 V and ≤ 100 mA)

The following applies to the contactors of the SIRIUS range:
If voltages ≤ 110 V and currents ≤ 100 mA are to be switched, the auxiliary contacts of the 3RT1 contactors or the 3RH1 auxiliary contactors should be used instead of the main contacts because of their contact reliability. This comes from their high contact stability due, in particular, to the shape of the contact pieces (cross-ribbing).
This ensures that the points of contact remain conductive in spite of surface contamination.

These auxiliary contacts are suitable for electronic circuits (programmable controllers) with voltages > 17 V and currents in the milliampere range (test circuit: 17 V, 5 mA).

Cross-ribbing

Surface contamination is the most common cause of control circuit contact faults. Cross-ribbing the contact areas is an extremely effective way of increasing contact reliability. All the auxiliary contacts of the SIRIUS contactors have this feature.
The following illustration show you how cross-ribbing is particularly effective against surface contamination due to the high number of contact areas and high surface pressure:

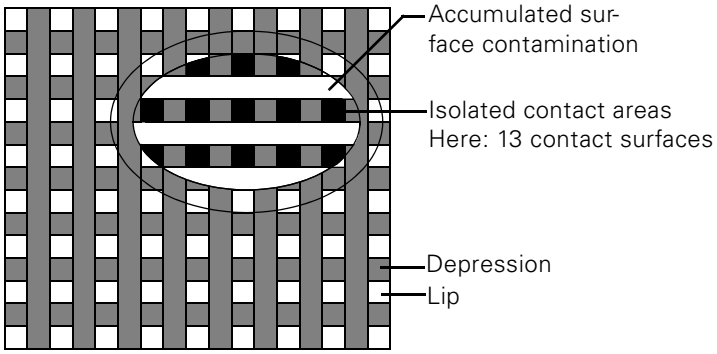

Fig. 3-2: Contact areas

Contact reliability of the auxiliary contacts

The contact areas of the SIRIUS auxiliary contacts display a high degree of contact reliability. Fault frequency rates of $H_F \leq 10^{-8}$ (i. e. < 1 fault per 100 mill. operating cycles at 17 V, 1 mA) have been registered.
These values apply to auxiliary contacts that are either integrated in the contactor housing or can be snapped on as auxiliary switch blocks.
In the case of built-on auxiliary switch blocks at the side, fault frequency rates are between 10^{-6} and 10^{-8}.
The tests are based on the requirements placed on signal generators by electronic controllers.
This means that with the auxiliary contacts of the SIRIUS contactors or auxiliary contactors, the permissible contact resistance is only exceeded once during a total of 10^8 (100 million) switching operations. During a long period of operation, therefore, a fault is not expected to occur, irrespective of the number of switching operations.
A restriction applies in the case of auxiliary switch blocks built on at the side.

Definition of switch fault frequency H_F

The fault frequency H_F is defined as the number of contact faults that occur during a certain number of switching operations.

3.2.3.3 Electrical service life

Electrical service life of the main contacts

The service life of the contacts consists of:

- at rated operational current I_e is defined in acc. with utilization category AC-4 (switching off 6 times the rated operational current):
  200 000 operating cycles
- at mixed modes - in other words, if normal switching mode (the rated operational current is switched off in acc. with utilization category AC-3) is mixed with occasional inching mode (several times the rated operational current is switched in acc. with utilization category AC-4):
  the service life can be roughly calculated with the following formula:

$$X = \frac{A}{1 + \frac{C}{100} \cdot \left(\frac{A}{B} - 1\right)}$$

Key to the formula:

X Contact service life in mixed mode in operating cycles
A Contact service life in normal operation (I_a=I_e) in operating cycles
B Contact service life in inching mode (I_a = a multiple of I_e) in operating cycles
C Percentage of the total number of switching operations accounted for by inching operations

Characteristic curve: contact service life of the main contacts

The following characteristic curves illustrate the contact service life of contactors when switching inductive three-phase loads (AC-1/AC-3), irrespective of the breaking current and rated operational voltage. The prerequisites are arbitrary (i.e. not synchronous with the phase relation of the control station operating the network).

I_a = breaking current

I_e = rated operational current

P_N = rated output of three-phase induction motors with squirrel cage at 400 V

Frame size S00

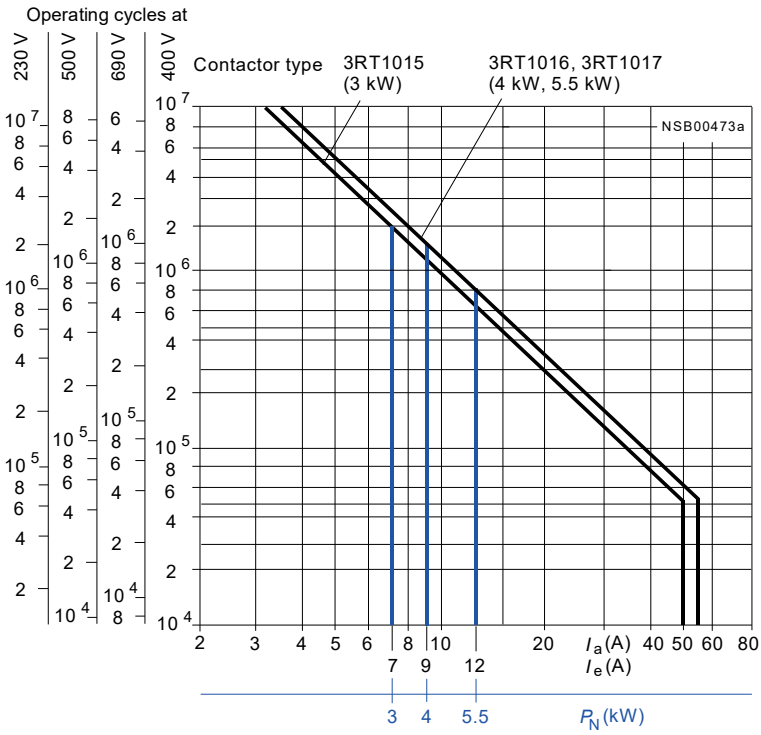

Fig. 3-3: Characteristic curve of the electrical service life of the main contacts (frame size S00)

Frame size S0

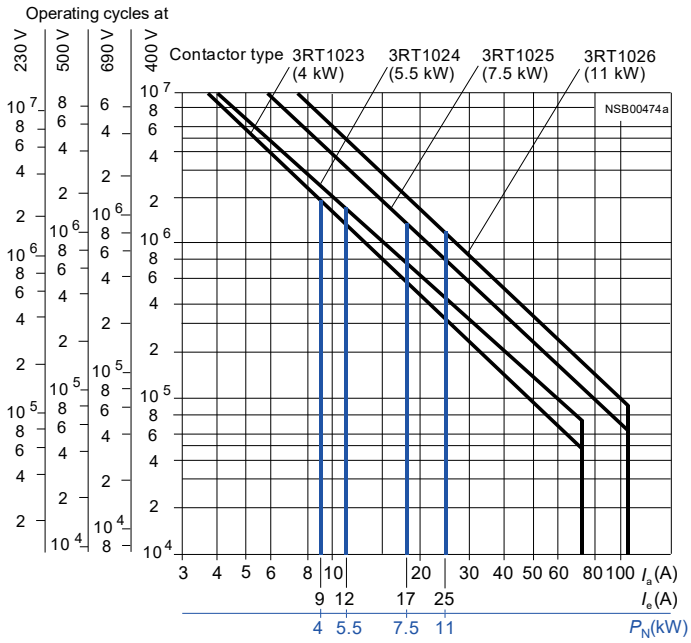

Fig. 3-4: Characteristic curve of the electrical service life of the main contacts (frame size S0)

Frame size S2

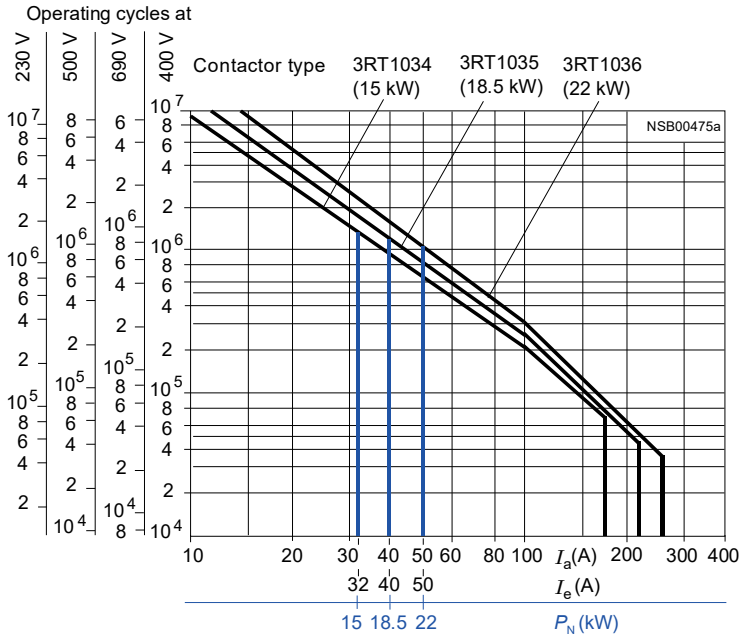

Fig. 3-5: Characteristic curve of the electrical service life of the main contacts (frame size S2)

Frame size S3

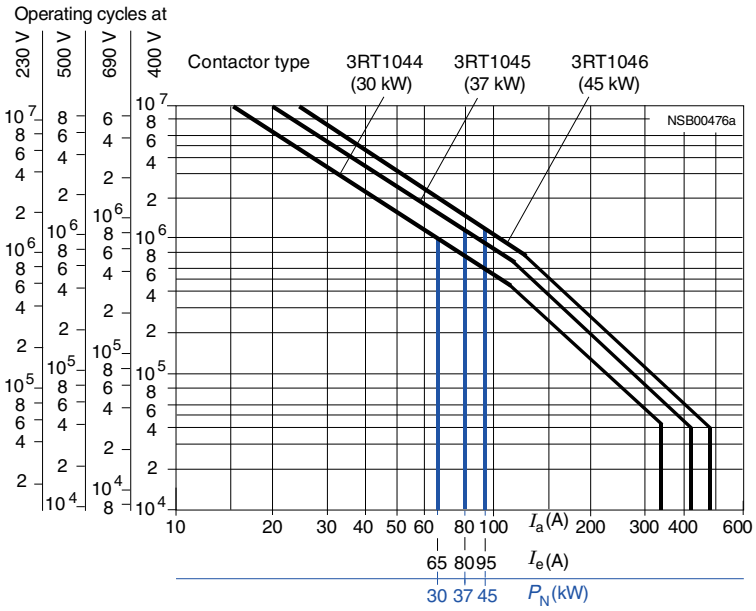

Fig. 3-6: Characteristic curve of the electrical service life of the main contacts (frame size S3)

Characteristic curve: contact service life of the auxiliary contacts

The contact service life depends on the breaking current. The prerequisites are arbitrary (i.e. not synchronous with the phase relation of the control station operating the network).
The characteristic curves apply to:
- Integrated 3RT10 auxiliary contacts
- 3RH1911 auxiliary switch blocks for contactors in frame size S00
- 3RH1921 auxiliary switch blocks for contactors in frame sizes S0 to S3

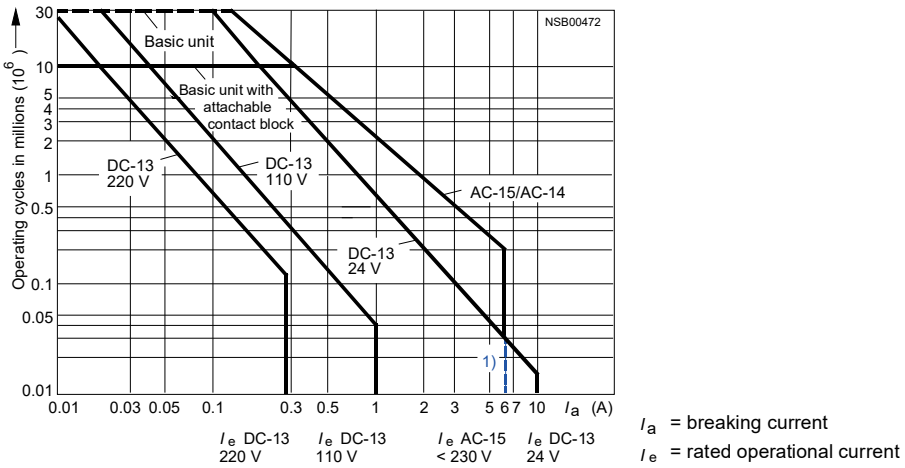

Fig. 3-7: Characteristic curve of the electrical service life of the auxiliary contacts

1) DC-13: built-on auxiliary switch blocks for frame size S00: 6 A

3.2.3.4 Ambient temperature

General information

The 3RT10 contactors are designed for use with an ambient temperature of -25 °C to +60 °C. Special designs are available to be used at -35 °C to +70 °C.

Use at higher ambient temperatures

The use of contactors in frame sizes S00 to S3 at higher ambient temperatures is possible when different limitations are taken into consideration.

Short time operation at Tu ≤ 80 °C

For the duration of 1 hour the contactor may be used up to a maximum ambient temperature of Tu ≤ 80 °C without derating the rated current. However, this requires that an average 24 hour mean ambient temperature of Tu ≤ 60 °C is not exceeded.
Limitation:
Contactors that contain electronic components or are combined with electronic accessories (for example integrated surge suppressor, electronic interface,...) may only be used up to a max. ambient temperature of Tu ≤ 60 °C.

Constant operation at an ambient temperature of Tu > 60 °C

The constant operation of the 3RT10 contactors at an ambient temperature of Tu > 60 °C is possible under the following guidelines.

Mounting

For better heat dissipation for contactors without side-mounted auxiliary contacts they should be mounted with a minimum 10 mm clearance when mounting side by side.
The following declarations are based on this clearance distance.

Thermal load carrying capacity of the main circuit

The standard contactors are designed for a max. ambient temperature of Tu = 60 °C.
For use of the contactors at higher ambient temperatures up to **max. 70 °C**, then the normal rated operational current I_e/AC-1 (or I_e/DC-1) and the operating frequency must be reduced.
The following calculations can be used:

$$I_{emax.,Tu} = I_e/AC\text{-}1 \bullet \frac{60\ °C}{Tu} \qquad I_{emax.,Tu} = I_e/DC\text{-}1 \bullet \frac{60\ °C}{Tu}$$

$$z_{max.,Tu} = z \bullet \frac{60°C}{Tu}$$

$I_{e\ max.,\ Tu}$ =	the calculated rated current of the contactor at increased ambient temperature
I_e/ AC-1 or I_e/ DC-1 =	Rated current of the contactor at the particular utilization category and Tu ≤ 60 °C
Tu=	Actual ambient temperature at Tu > 60 °C

Coil voltage tolerance

So that the contactor coil isn't thermally overloaded with the increased ambient temperature, the voltage tolerance of the rated coil voltage Us needs to be limited according to the Table.

Tu	S00	S0 to S3
60 °C	0.85 to 1.1 U_s	0.8 to 1.1 U_s
70 °C	0.85 to 1.0 U_s	0.8 to 1.0 U_s

Table 3-9: Coil voltage tolerance

Service life

The use of the contactors at higher ambient temperatures leads to increased stress of the plastic material, main circuits and the operating mechanism. This results in the reduction of the mechanical service life and time to failure of the contactor. The time to failure is decisively influenced by the running time.
The following table shows the reduced service life values:

	S00	**S0 to S3**	**S00 to S3**
Ambient temperature Tu	Mechanical service life [x10^6 operations		Time to failure [years]
≤ 60 °C	30	10	20
65 °C	15	5	15
70 °C	3	1	10

Table 3-10: Service life of the contactor 3RT10

The data given for the time to failure is based on a running time of 100 %. At a running time of 50 % the values are doubled.

Use of the contactors, frames sizes S00 to S3 at low ambient temperatures

The contactors in frame sizes S00 to S3 can be used with a minimum ambient temperature of Tu ³ -50 °C with up to a 50 % reduction mechanical service life.
The other catalog data remains the same.
There are steps that need to be taken against condensation (for example, control panel heating).
In low ambient temperature applications, high operating frequency and running time is less critical than low operating frequency and running time.
Contactors that contain electronic components or are combined with electronic accessories may not be used under Tu = -40 °C

3.3 Application and areas of use

Various switching devices are available for switching electrical loads. The contactor is the most suitable device for frequent switching operations. Contactors are the most commonly used switching device in industry, mechanical engineering and in switchgear and controlgear. Due to the increased automation in manufacturing, contactors have become more important. This has also increased the variety of loads that must be controlled.

Automated production systems are considerably more sensitive to operational malfunctions than manually operated systems. Each fault on an electrical device means downtime, waste, loss of production, and investment in order to get the system up and running again.
For this reason, we concentrated on high reliability when developing the SIRIUS contactor range. This includes, increased service life, high contact reliability, and the possibility to use the contactors at higher ambient temperatures in the enclosure. It is possible to use the contactors up to 60 °C without derating when the devices are installed in a row.

To deal with the variety of possible applications, there are also contactor variants for special applications, such as for switching resistive loads or capacitors. This is in addition to the main 3RT10 range of contactors for switching motors.
The different contactor ranges and their possible applications are described in the following subsections.

3.3.1 3RT10 contactors with 3 main contacts for switching motors

Field of application

The 3-pole 3RT10 contactors use 3 NO contacts as main contacts. They are mainly used to switch three-phase induction motors.

Frame sizes

The full performance range from 3 to 45 kW/400 V (utilization categories AC-2 and AC-3) (up to 75 HP/460 V UL508) is covered by 4 frame sizes.
The frame sizes cover most of the standard motor outputs.

Dimensions

The contactors are provided with alternating or direct current magnetic systems. The required panel areas of the devices of the two operating mechanism types are the same. For frame sizes S0 to S3, the installation depth for contactors with the DC magnet system is between 10 mm and 15 mm greater than for the variants with the AC magnet system.

Power ratings

All the specified power and current ratings apply to an ambient temperature of 60 °C without derating.
For use at increased ambient temperatures see section 3.2.3.4 "Ambient temperature".

Increasing the power

The ease of expansion is an advantage for configuration. In many applications there is enough space to retrofit the contactor with the next higher rating class and thus increase motor output.

3.3.2 3RT14 contactors with 3 main contacts for switching resistive loads (AC-1)

Field of application

The 3RT14 contactors with 3 main contacts for switching resistive loads are used for applications in the AC-1 utilization category:

- Switching of resistive loads such as heating systems or resistance furnaces
- Applications in which a low switching capacity is sufficient
- Applications in which high continuous currents occur without peaks (e.g. as a generator contactor or in the case of variable-speed drives).

Switching capacity

1.5 times the I_e/AC-1 can be switched on and off. Switching off higher currents, with the emergency stop, for example, is possible up to 8 times the I_e/AC-3 current.

Comparison: 3RT14/3RT10

The following table shows you the difference between the 3RT14 and 3RT10 contactors for normal AC-3 applications:

	Contact material	Conducting paths
3RT14	Contact material with high current-carrying capacity and better thermal properties	Larger conducting paths that permit better cooling
3RT10	Contact material that ensures better switching capacity	

Table 3-11: Comparison between the 3RT14 and 3RT10 contactors

Planning note

The 3RT10 range of contactors for switching motors also has a specific AC-1 switching capacity. However the more economic solution would be to use the 3RT14 AC-1 contactor for this specific purpose.

Accessories

You can use the same accessories for the 3RT14 contactors as you can for the 3RT10 contactors.

3.3.3 3RT13 and 3RT15 contactors with 4 main contacts

Model

There are two variants of the contactors with 4 main contacts:
- 3RT13 with 4 NO contacts
- 3RT15 with 2 NO + 2 NC contacts

You can use the same accessories for both the 3-pole SIRIUS contactors and the 4-pole variants.

Field of application

The following table gives the fields of application for the 3RT13 and 3RT15 contactors:

3RT13 contactors with 4 NO contacts	3RT15 contactors with 2 NO + 2 NC contacts
• Switching of resistive loads • Isolation of networks with ungrounded or badly grounded neutral conductors • Supply switch-overs in the case of alternative AC power supplies • As a contactor - for example, in variable-speed drives that only have to carry the current, not switch it	• Pole switch-over in the case of crane-type motors • Switching of 2 separate loads • Breaking contactor

Table 3-12: Applications of 4-pole contactors

Auxiliary contact

The following table specifies the maximum number of auxiliary contacts that can be attached:

Frame size S00	Frame size S0	Frame sizes S2 and S3
4 auxiliary contacts	Maximum 2 auxiliary contacts (added on the side or snapped on the front)	Maximum of 4 auxiliary contacts (added on the side or snapped on the front)

Table 3-13: 4-pole contactors and auxiliary contacts

Contactor combination with mechanical interlocking

The 4-pole 3RT13 contactors with 4 NO contacts as main contacts in frame sizes S0 to S3 are suitable for putting together contactor combinations with mechanical interlocks for use in supply switch-overs.

3.3.4 3RT16 capacitor contactors

Field of application

3RT16 capacitor-switching contactors are used to switch power capacitors that are used in reactive-current compensation.

Frame sizes

The capacitor-switching contactors are available in frame sizes S00, S0 and S3 with the rating levels 12.5, 25 kvar, and 50 kvar at 400 V.

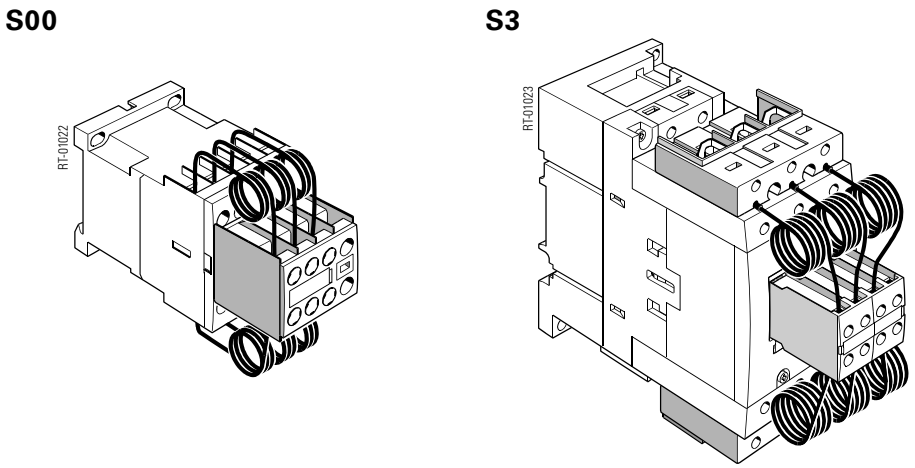

Fig. 3-8: Capacitor contactors (frame sizes S00 and S3)

Auxiliary contacts

The auxiliary contact block attached onto the capacitor contactor contains three leading NO contacts and a normal NO contact that can be assigned as you wish. In Frame size S00, an additional 1 NC contact is available in the base unit. A 2-pole auxiliary switch block can also be attached to the side of the frame size S3 capacitor contactors (variants: 2 NO contacts, 2 NC contacts, or 1 NO + 1 NC contact).

Switching capacitors/ banks of capacitors

A single capacitor can normally be switched on because the current is limited by the inductance of the upstream transformer and the cables. It is more difficult to switch banks of capacitors (parallel connection of a capacitor to capacitors already present) because the current is now only limited by the low inductance of the connecting leads and the capacitors.
This problem is solved with capacitor-switching contactors using precharging resistors.

Precharging resistors

The precharging resistors are an integral part of the contactor in 3RT16 capacitor-switching contactors. They are switched on via leading auxiliary contacts before the main contacts close. This results in damping down to approximately 10 % of the undamped peak currents. Damping of peaks in the making current prevents disturbances to the network.

Important
When switching banks of capacitors make sure that you adhere to the specified minimum inductance between the capacitors connected in parallel.

3RT10. capacitor switching capacity

The normal 3RT10 contactors for switching motors also have a certain capacitor switching capacity. Details of this can be found in Section 3.7, "Technical specifications: Utilization category AC-6b, switching of individual capacitors and switching of low-inductance three-phase capacitors". The tables contain information on the switching of individual capacitors and the switching of banks of capacitors.

Operation

Caution
Only switch to discharged capacitors! Do not carry out a function test by hand.
The precharging resistors must not be removed as this will damage the contact pieces in circuits with a load.

Circuit diagram

S00

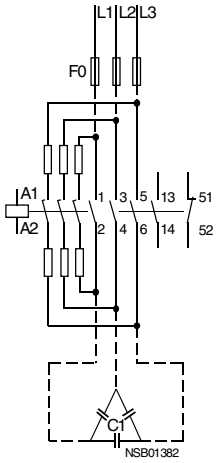

S0 and S3

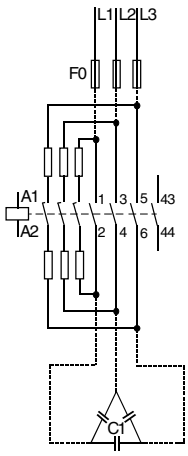

Fig. 3-9: Capacitor contactors, circuit diagram

3.3.5 Contactors with an extended operating range

Field of application

The contactors with an extended operating range use a DC magnetic coil. They are used in systems with strong fluctuations in the control supply voltage and at the same time high ambient temperatures, such as railway applications in extreme climatic conditions, rolling mills, etc.

Standards

Contactors with an extended operating range comply with the following standards:
- IEC 60 947-4-1
- EN 60 947-4-1 (VDE 0660 Part 102)
- The requirements of IEC 60 077

They are shockproof in acc. with DIN VDE 0106 Part 100.
Exception: the series resistor in frame sizes S0 to S3

Control current circuits and auxiliary current circuits

The magnet coils of the contactors have an extended operating range of 0.7 to 1.25 x U_S and are wired with varistors as standard to provide protection against overvoltage. This increases the time to contact opening when compared with standard contactors by 2 ms to 5 ms.

With/without a series resistor

The 3RH11 and 3RT10 contactors with the suffix -0LA0 at digits 13 to 16 in the order number are used where several auxiliary contacts are required, in addition to a wide operating range and a high ambient temperature of 70 °C. Up to 4 auxiliary contacts can be used in these variants.
If fewer auxiliary contacts are required, contactors with the same extended operating range that work without a series resistor are available up to frame size S0.
As an alternative to the contactors with a series resistor there is the electronic control module available for contactors in frame sizes S0 to S3.
Advantages:
- no increase in the mounting width of the series resistor
- lower contact current closing rating
- no auxiliary contact needed for the control of the series resistor

The three ranges are described in more detail below

3.3.5.1 Contactors with series resister (3RH11...-0LA0/3RT10...-0LA0)

The DC magnetic systems of these contactors are, due to their increased operating range, turned on with a defined overexcitation. As a result of the power up, there is a switch over to the hold-in coil via the series resistor.

Designs in frame size S00

Control relays and contactors of frame size S00 are available with the following:
- A built-on block that contains the series resistor (the NC contact required for the switch-over is integrated in the basic unit and is already wired).
- Integrated varistor
- A 4-pole auxiliary switch block (in acc. with EN 50 005) can also be built on.

Designs for frame sizes S0 to S3

Contactors of frame sizes S0 to S3 are fitted on the front with an auxiliary switch block with 2 NO contacts + 2 NC contacts. The separate series resistor that is attached next to the contactor on the 35 mm rail has connecting leads for contactor attachment. An NC contact of the auxiliary switch block is required for the switch-over to hold-in coil level. A circuit diagram with the terminal points is attached on each contactor.

Auxiliary contacts

One NC contact of the auxiliary contacts is required for the series resistor. The number of auxiliary contacts that are available beyond this is listed in the selection and order data. With frame size S00, the auxiliary switch block must be ordered separately.
An increase of the mountable auxiliary contacts is only possible with frame size S00.

Installation

The following types of installation are permissible for contactors and control relays in ambient temperatures of up to 70 °C:
Frame size S00: installation in series
Frame sizes S0 to S3: The resistor block must be installed on the right side of the contactor because of the connecting leads there.

Dimensions

When the resistor is mounted, the contactors of frame sizes S0 to S3 become wider (see Section 3.6, "Dimensional drawings").

Circuit diagrams

Frame size S00

Terminal markings in acc. with DIN EN 50 012
Contactors 3RT1017-2K.42-0LA0

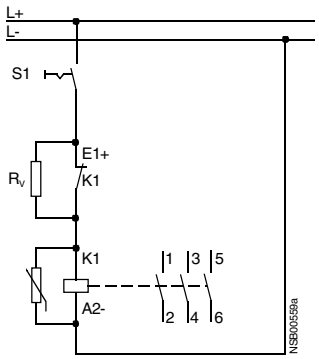

Terminal markings in acc. with DIN EN 50 005
Control relays
3RH1122-2K.40-0LA0

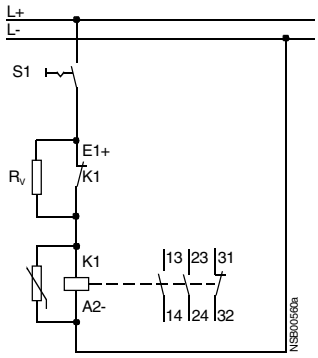

Series resistor R_V attached
NC contact wired
2 NO + 1 NC contacts available

Fig. 3-10: Contactors with an extended operating range, circuit diagrams

Frame sizes S0 to S3
Terminal markings in acc. with EN 50 012
Contactors 3RT102.-, 3RT103.-, 3RT104.-3K.44-0LA0
With front-mounted 4-pole auxiliary switch block 3RH1921-1HA22

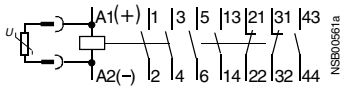

2 NO + 2 NC contacts
Identification number 22

Fig. 3-11: Contactors with an extended operating range, terminal markings

The NC contact at 21/22 is needed for the wiring of the series resistor

Circuit diagram for wiring of the series resistor

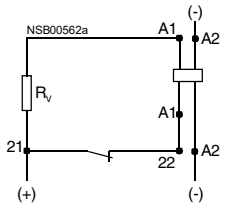

Fig. 3-12: Contactors with an extended operating range, circuit diagram

3.3.5.2 Contactors with electronic control module frame sizes S0 to S3 (3RT10..-.X40-0LA2)

Design

The contactors are controlled using a line side electronic control module. These ensure an operating range of 0.7 to 1.25 U_S at an ambient temperature of 70 °C. The coil has a integrated varistor to dampen the switching overvoltage of the coil. This causes an increase contact opening time compared to the standard contactors of about 2 ms to 5 ms. The contactors with an electronic control module are also offered as a complete device.

Auxiliary contacts

The mounting of auxiliary contacts corresponds to the corresponding standard contactors.

Installation

These contactor designs can be mounted side-by-side in frame sizes S0 to S3 at ambient temperatures up to 70 °C.

Ambient temperature

The allowable ambient temperature for the operation of the contactors (at the full operational range of the coils) is - 40 °C to + 70 °C. At constant operation with temperatures of > + 55 °C there is a reduction of mechanical service life, the loadability of the main conducting paths and the reliable switching frequency.

Dimensions

With the top mounted electronic control module, the height of the contactor is increased up to 34 mm (for dimensional drawings see Section 3.6 "Dimensional drawings").

Circuit diagram and terminal connections

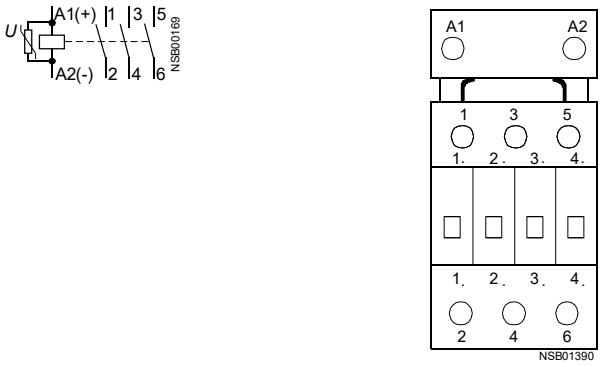

Fig. 3-13: Contactor with electronic control module, circuit diagram + terminal connections

3.3.5.3 Contactors with an extended operating range (3RH1122-2K.40, 3RT1017-2K.4., 3RT102.-3K.40)

Contactors of frame size S00: 3RH11 22-2K.40, 3RT1017-2K.4. and frame size S0: 3RT102.-3K.40 have the following features:

- Extended operating range of 0.7 to 1.25 x U_S
- The magnet coils are wired with a varistor; an additional series resistor is not required

Note the following:

- Frame size S00: an auxiliary switch block cannot be attached
- Frame size S0: a maximum of two 1-pole auxiliary switch blocks can be attached

Installation

At an ambient temperature > 60 °C $\leq$ 70 °C, there must be spacing of 10 mm when installing in series.

Ambient temperature

The permissible ambient temperature for operating the contactors at the full operating range of the magnet coils is -35 °C to +70 °C. During continuous operation with temperatures > +55 °C, the mechanical service life, the current-carrying capacity of the conducting paths, and the switching frequency are reduced.

3.3.6 3RH1 control relays

Control relays are switching devices for auxiliary circuits for controlling, signaling, and interlocking. Control relays have to meet specific requirements in terms of clear terminal markings and have a time- and cost-saving terminal system.
The SIRIUS 3RH1 control relays (frame size S00) meet these requirements

Terminal markings

The terminal markings comply with EN 50 011 and EN 50 005 (for a more detailed explanation, see Section 3.4.1 "Auxiliary switches").

Frame size and features

3RH1 control relays are available as follows:
- Frame size S00
- With AC or DC operation
- Same construction as the motor contactor of frame size S00
- 4-pole basic version
- Can be extended to 8 poles with snap-on auxiliary switch blocks
- Screw-type or Cage Clamp terminals

Screw-type terminals

The 3RH1 control relays have captive screws (cross-tip Pozidriv, size 2), with all the terminal points open on delivery. The screwdriver guides allow screw-driving machines to be used.

Cage Clamp-Terminals

The 3RH11 control relays are also available with Cage Clamp terminals - a screwless terminal system. This type of terminal is particularly suitable if strong shock or vibration can be expected at the installation location. These terminals are also suitable for two-conductor connections. All the terminals are accessible from the front and are easily visible.

Soldering pin connections

Both the 4-pole basic version as well as the control relays that have an auxiliary switch block attached at the front (see Section 3.4, "Accessories") can be soldered onto printed circuit boards using a soldering pin adapter.

Contact reliability

All the switching elements of the 3RH1 control relays are equipped with contact pieces that have particularly high contact stability, ensuring high contact reliability even at low voltages and currents. This subject is discussed in detail in Section 3.2.3.2, "Contact reliability".

3RH14 latched auxiliary contactors

If there is a short circuit in the low-voltage network, or when large drive motors are switched on directly, the control supply voltage for the auxiliary contactors may fail briefly or fall below the permissible tolerance level. To ensure continuous operation, the variant with mechanical latching (3RH14) can be used with the auxiliary contactors.
These auxiliary contactors latch mechanically after power-up and remain in an energized state even in the event of a power failure. The auxiliary contactor can be unlocked electrically using an interlock release magnet or manually using a button on the front of the attached latched block. When the voltage returns, the production program can be resumed immediately without resetting times due to the storage feature of the auxiliary contactors.
The contactor coil and the coil of the release magnet are both designed for continuous operation.
The power input is the same for the contactor coil and the release coil.
The mechanical service life is 1 million operating cycles.

3.3.7 3RT10 contactor relays for switching motors (interface) and 3RH11 control relays for switching auxiliary circuits

Contactor relays are available in the SIRIUS modular system for switching motors and auxiliary circuits for the purpose of smooth interaction with electronic controllers. These are variants of the 3RT10/3RH11 contactor series with the following features:

- Low power input
- Wide operating range of the magnet coil 0.7 to 1.25 x U_S
- High contact reliability of the auxiliary contacts
- Integrated or attachable overvoltage damping

Contact reliability

The high contact reliability of the auxiliary contacts ensures that false signals do not occur even at low switching capacities. With a voltage of 17 V and a current of 1 mA, there is on average less than one contact fault per 100 million switching operations.

Overvoltage damping

Overvoltage damping protects sensitive output levels of electronic controllers against switching overvoltages of the coil.

Extended operating range

The operating range of the coil of the contactor relays covers a voltage range from 0.7 to 1.25 x U_S (U_S= rated control supply voltage). This wide operating range is required for the supply voltage of electronic controllers with the required voltage tolerances.
The supply voltage of electronic controllers with 24 V DC covers the range 20.4 V to 28.8 V in acc. with DIN 19 240. If you take into consideration an additional loss of voltage of up to 3 V during the output phases, the contactor drive must be able to operate perfectly with voltages between 17.4 V and 28.8 V. The 3RT10 and 3RH11 contactor relays for electronic controllers operate safely from 17 V to 30 V, which corresponds to a voltage range of 0.7 x U_S to 1.25 x Us. This is a considerably wider operating range than that of 0.85 to 1.1 x U_S for contactors and auxiliary contactors in acc. with IEC 60 947, DIN EN 60 947 (VDE 0660).

Voltage ranges

The following graphic shows you the voltage ranges for electronic controllers and drives of contactors and contactor relays with a rated control supply voltage of U_S = 24 V DC:

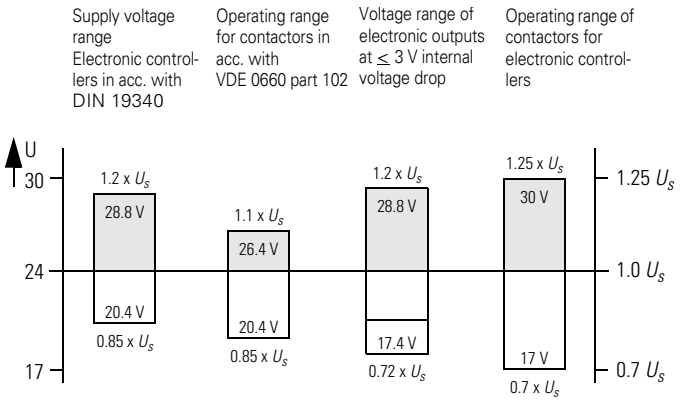

Fig. 3-14: Contactor relays: voltage ranges

Auxiliary contact blocks

Auxiliary contact blocks can be built on as follows:
Frame size S00: none
Frame size S0: a maximum of two 1-pole auxiliary contact blocks

Power consumption

Variant 1: The power input of the magnet coils for contactor relays in frame size S00 is 2.3 W at 24 V DC (operating range: 0.7 to 1.25 x U_S).

Variant 2: Contactor relays with reduced coil performance in frame size S00, P = 1.4 W at 24 V DC (operating range: 0.85 to 1.85 U_S).

The power input of magnet coils for contactor relays in frame size S0 is 4.2 W at 24 V DC (operating range: 0.7 to 1.25 x U_S).

3.3.8 3RA13 Contactor combinations for reversing

3RA13 reversing contactor combinations are available pre-assembled from the factory or as components for self-assembly

- S00 to S3: pre-assembled from the factory or as kit for self-assembly
  Frame sizes S2 and S3 are delivered already mounted on a base plate.

The same accessories can be used as for the basic contactors of the corresponding frame size (see Section 3.4, "Accessories").
For motor protection an overload relay must be attached.

4-pole contactor combinations for reversing can be put together in frame sizes S0 and S2.

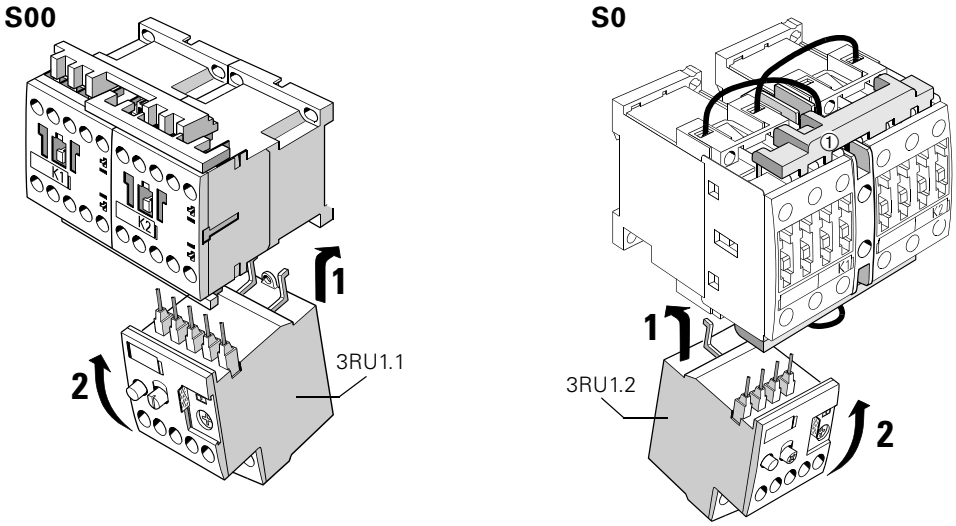

Fig. 3-15: Fully assembled contactor combination for reversing (frame sizes S00 and S0)

Approvals

The ⓢⓕ and ⓤⓛ approvals only apply to complete contactor combinations and not to combinations that have been field assembled from separate components.

Switch-over time

If the contactors are interlocked by means of their auxiliary switches (electrical interlocking) or by mechanical interlocking, there is no overlapping of the contacts and the arcing time between the contactors at switch-over.
The switching times of the contactors are not affected by the mechanical interlock.

Note
At voltages of >500 V a switch-over pause of 50 ms must be included.
AC-operated 3RT10 contactors in reversing or Dahlander mode require an NC contact interlock and a switch-over pause of 50 ms.

Auxiliary contact elements

Different auxiliary switches can be attached (at the front or the side) to the 3RA1 reversing combination. An integrated auxiliary switch contact is available in frame size S00.

Accessories

The following accessories for the basic units can also be used for contactor combinations for reversing:
- Auxiliary switch blocks (at the front/side)
- Surge suppressors
- Soldering pin adapters (frame size S00)

The following accessories are designed specifically for contactor combinations for reversing:
- Locking devices for mechanical interlocking
- Locking devices for mechanical and electrical interlocking (at the front/side)
- Terminals for contactor coils (for frame sizes S0 to S3)
- Mechanical connectors
- Wiring modules

Terminals for contactor coils

To reach the coil terminals A1 and A2 of the frame sizes S2 and S3 reversing contactor combinations more easily, you can use extension terminals for contactor coils.
For each combination, 2 x A1 and 1 x A2 are required.

Wiring module

Wiring modules are available to enable you to carry out different types of wiring (Dahlander wiring, for example).
You can find out how to mount the wiring modules in the diagrams of the self-assembly kits.

Mechanical interlocking

Mechanical interlocking (for frame sizes S0 to S3) is available in 2 variants:
- Attachable at the front (contactor spacing: 0 mm)
- Attachable at the side with integrated NC contact for electronic interlocking

Note
If you want NC contact interlocking, you must use contactors with 1 NC contact in the basic unit with the 3RT1 contactors of frame size S00.

Mechanical interlock installation

The following graphics show you how to install the front mount mechanical interlock for frame size S0:

Drawing: Frame size S0	Step	Procedure
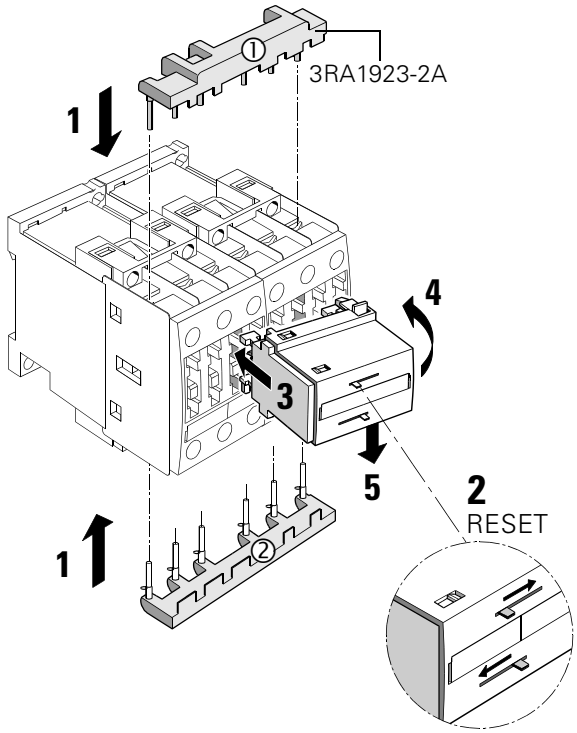	**1**	Attach both of the wiring modules in order to connect the main conducting paths. Shown as the circled numbers: ① = Top wiring module ② = Bottom wiring module
	2	Push the sliding switch on the upper portion of the mechanical interlock to RESET, in order to be sure of the conditional state of the module.
	3/4/5	First attach the mechanical interlock in the contact opening of the left contactor **(3)**, then with a swinging motion attach the mechanical interlock in contact opening of the right contactor **(4)** and pull the interlock downward until it sits securely in place **(5)**.
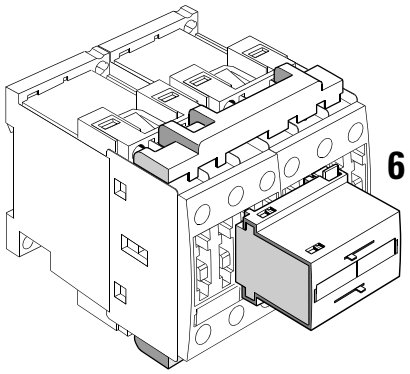	**6**	In the proper operational condition, the upper sliding switch on the front side of the mechanical interlock is to the left and the lower sliding switch is to the right.

Table 3-14: Installation of the front mounted mechanical interlock (frame size S0)

The following graphics show you how to install the front mount mechanical interlock with frame sizes S2 and S3:

Drawing: Frame sizes S2/S3	Step	Procedure
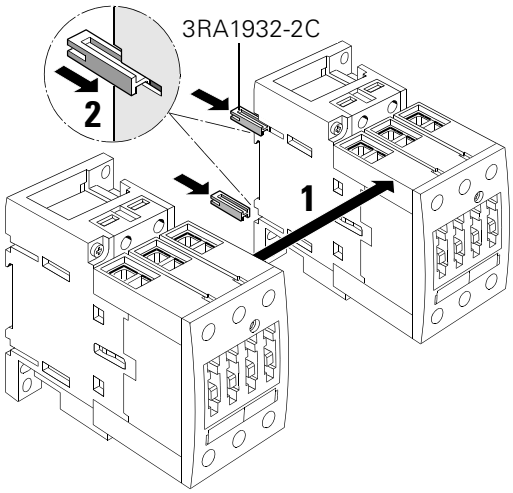	**1/2**	Place the contactors even to one another **(1)** and plug-in both of the connection clips to the backside **(2)**.
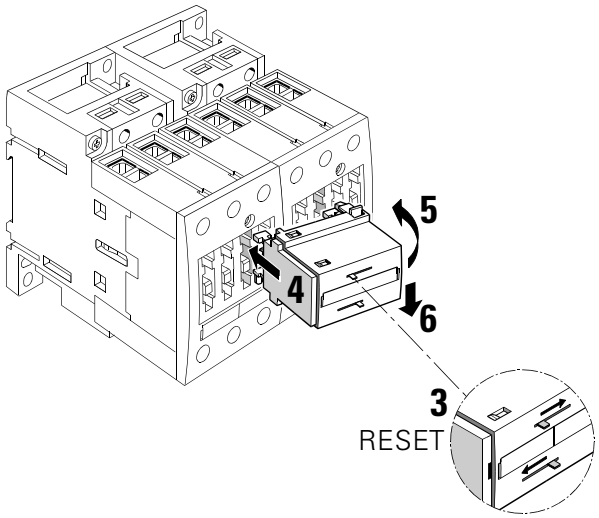	**3**	Push the sliding switch on the upper portion of the mechanical interlock to RESET, in order to be sure of the conditional state of the module **(3)**. First attach the mechanical interlock in the contact opening of the left contactor **(4)**, then with a swinging motion attach the mechanical interlock in contact opening of the right contactor **(5)** and pull the interlock downward until it sits securely in place **(6)**.
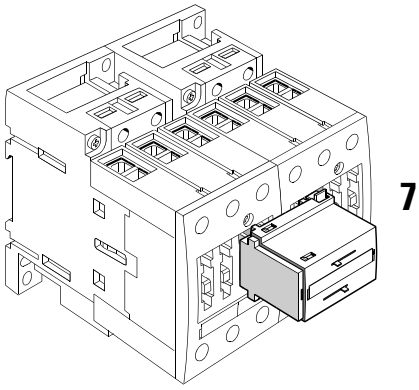	**7**	In the proper operational condition, the upper sliding switch on the front side of the mechanical interlock is to the left and the lower sliding switch is to the right.

Table 3-15: Installation of the front mounted mechanical interlock (frame sizes S2/S3)

Assembly kits for contactor combinations

The following accessories are components of the self-assembly kits and they are described in the diagrams of the relevant kit:

- Side mount mechanical interlock
- Mechanical connectors
- Wiring modules

Assembly kits for reversing combinations

The following table shows you the components of the kit for the contactor combination for reversing in frame size S00 and explains how to put it together:

Drawing: frame size S00	Step	Procedure
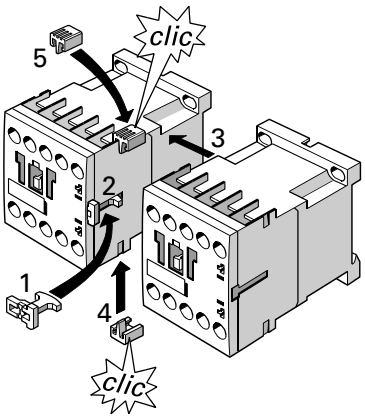	**1/2/3**	Mount the mechanical interlock between the two contactors.
	4/5	Press the two connecting clips from above and below onto the two contactors.
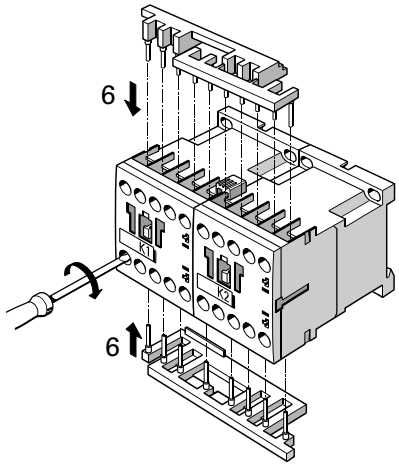	**6**	Attach the wiring modules to connect the main conducting paths and to electrically interlock the two contactors (3RT10.1). Make sure that the wiring modules are flush with the contactor at the side.

Table 3-16: Assembling the contactor combination for reversing (frame size S00)

Electrical interlock

Note
Contactors with an NC contact in the basic unit (3RT101.) are required for the electrical interlock.

The following table shows you the components of the kit for the contactor combination for reversing in frame size S0 and explains how to put it together:

Drawing: frame size S0	Step	Procedure
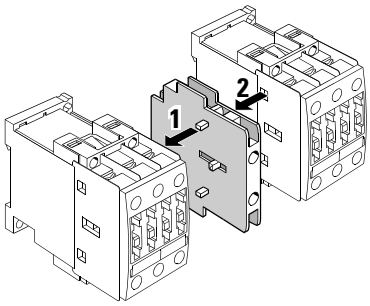	**1/2**	Mount the mechanical interlock between the two contactors.
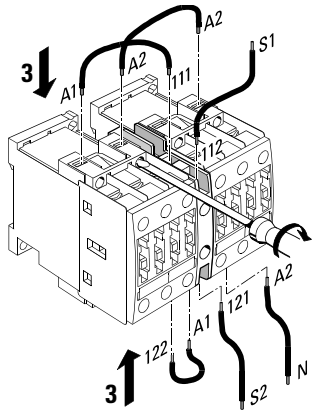	**3**	Wire the actuating voltage and the electrical reversing interlock using the auxiliary conducting paths.
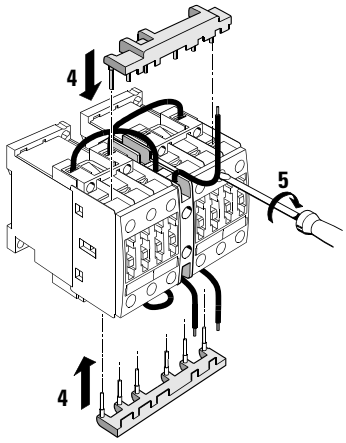	**4/5**	Attach the wiring modules in order to connect the main conducting paths and tighten the terminals.

Table 3-17: Assembling the contactor combination for reversing (frame size S0)

The following table shows you the components of the kits for the contactor combination for reversing in frame size S2 and S3 and explains how to put it together:

Drawing: frame size S2 (S3)	Step	Procedure
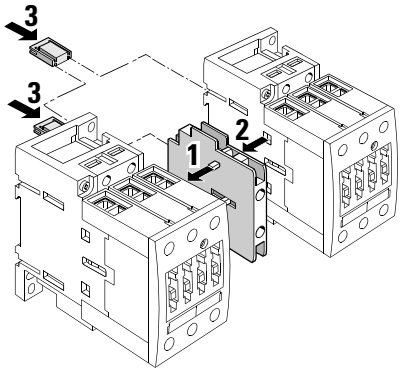	**1/2/3**	Mount the mechanical interlock between the two contactors. Then insert the 2 connecting clips (10 mm spacing) on the back of the two contactors.
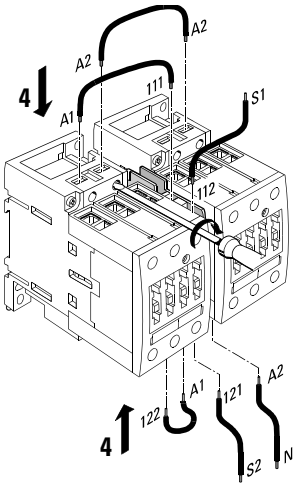	**4**	Wire the actuating voltage and the electrical reversing interlock using the auxiliary conducting paths.
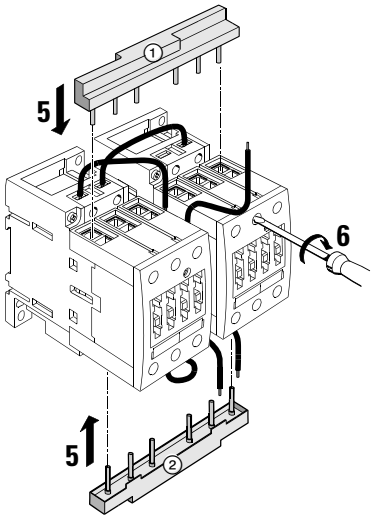	**5/6**	Attach the wiring modules **(5)** in order to connect the main conducting paths and tighten the terminals **(6)**.

Table 3-18: Assembling the contactor combination for reversing (frame sizes S2/S3)

4-pole contactor combination for reversing

4-pole contactor combinations for reversing are available in frame sizes S0 and S2. You will require the following to mount these combinations:

- Frame size S0: locking device for mechanical interlock
- Frame size S2: locking device for mechanical interlock and 2 connecting clips

The following graphic shows you how to set up the 4-pole contactor combination for reversing in frame size S0:

Drawing: frame size S0	Step	Procedure
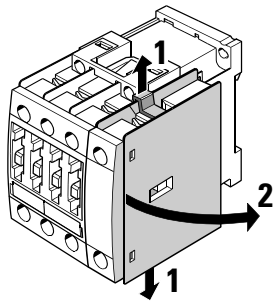	**1/2**	Remove the 4th pole from one of the two contactors by releasing the snap catch **(1)**.
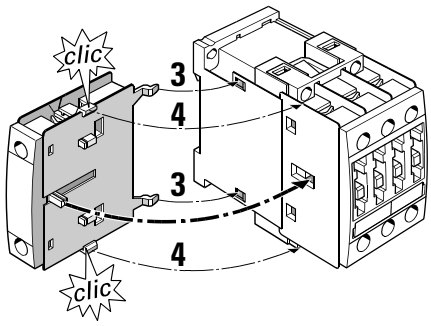	**3/4**	Put the 4th pole on the other side of the same contactor by placing the catches on the pole into the openings shown on the contactor and snapping the pole onto the contactor.
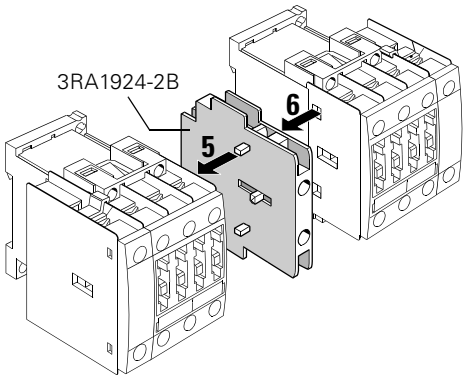	**5/6**	Mount the mechanical interlock between the two contactors **(5/6)**.

Table 3-19: 4-pole contactor combination for reversing (frame size S0)

Assembly of the contactors in frame size S0 with front interlocking

Drawing: frame size S0	Step	Procedure
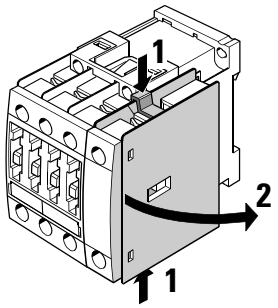	**1/2**	Remove the 4th pole of the left contactor by pressing the ribbed surfaces at the top and bottom at the same time **(1)** and then removing the pole **(2)**.
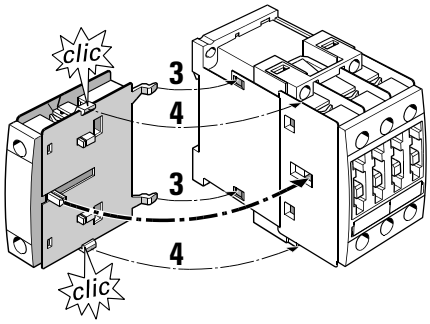	**3/4**	Attach the pole to the left side of the same contactor.
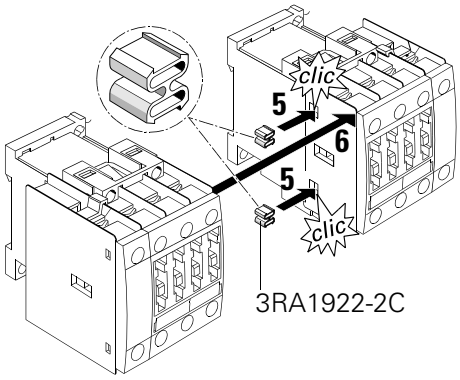	**5/6**	Put the contactors together by inserting two mechanical couplers (3RA1922-2C) in the appropriate openings of the contactor **(5),** and then press the other contactor onto these mechanical couplers **(6)**.
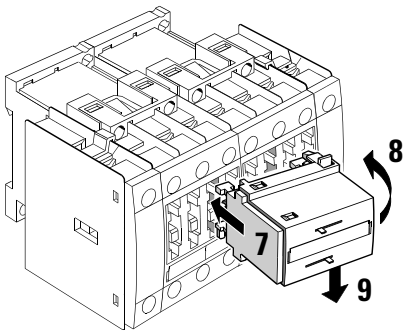	**7/8/9**	Mount the mechanical interlock at the front (3RA1924-1A) over the two contactors.

Table 3-20: 4-pole reversing contactor combination with front interlock (frame size S0)

The following graphic shows you how to assemble the 4-pole reversing contactor combination in frame size S2:

Drawing: frame size S2	Step	Procedure
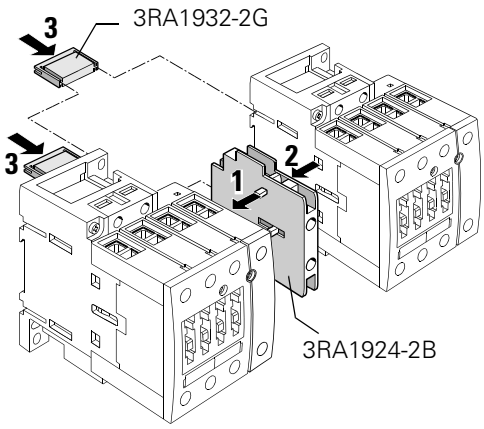	**1/2**	Mount the mechanical interlock between the two contactors.
	3	Insert the 2 connecting clips on the back of the two contactors.

Table 3-21: 4-pole reversing contactor combination (frame size S2)

NO contact function not interlocked

If contactors in frame size S00 are used with 1 NO contact that is intended for an auxiliary function (e.g. as a signaling device), the wiring module must be separated. The illustration below shows you the wiring for this function:

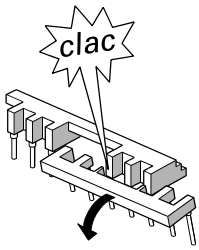

Fig. 3-16: NC contact wiring for the electrical interlock (frame size S00)

Mounting and connection

The contactor combinations for reversing have screw-type connections that are suitable for both panel mounting and snap-on mounting on a 35 mm rail.

Conductor cross-sections

The permissible conductor cross-sections of the contactor combinations for reversing correspond to those of the basic units for the corresponding frame size.

Circuit diagrams

Main circuit: S00 to S3

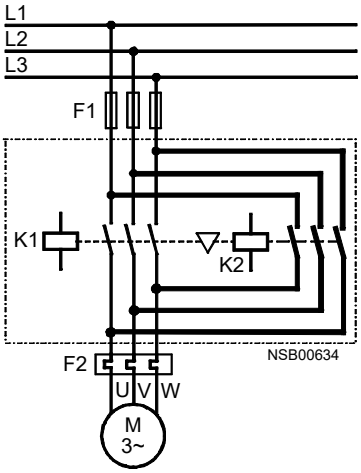

Fig. 3-17: Reversing contactor combination, main circuit (frame sizes S00 to S3)

Control circuit: S00

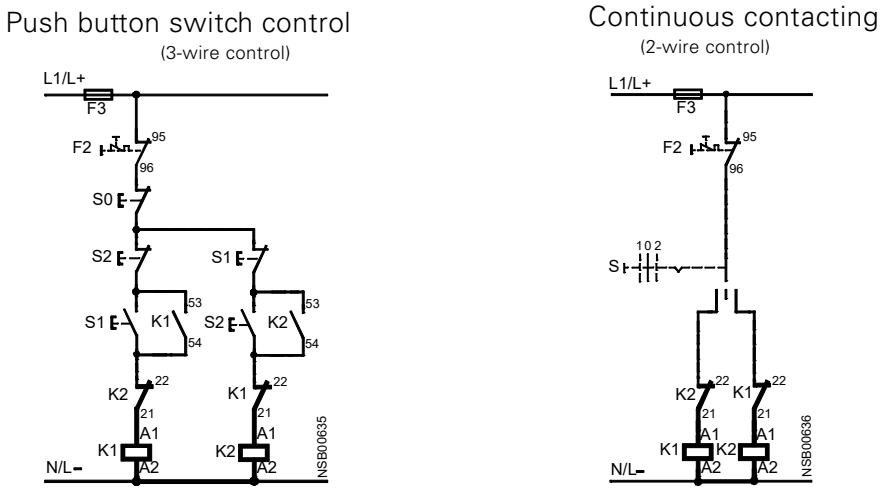

Fig. 3-18: Reversing contactor combination, control circuit (frame size S00)

S0 "Off" button
S1 "Clockwise rotation on" button
S2 "Counterclockwise rotation on" button
S "Right/off/left" selector switch

K1 Clockwise rotation contactor
K2 Counterclockwise rotation contactor

F1 Fuses for main circuit
F2 Overload relay
F3 Fuses for control circuit

Control circuit: S0 to S3

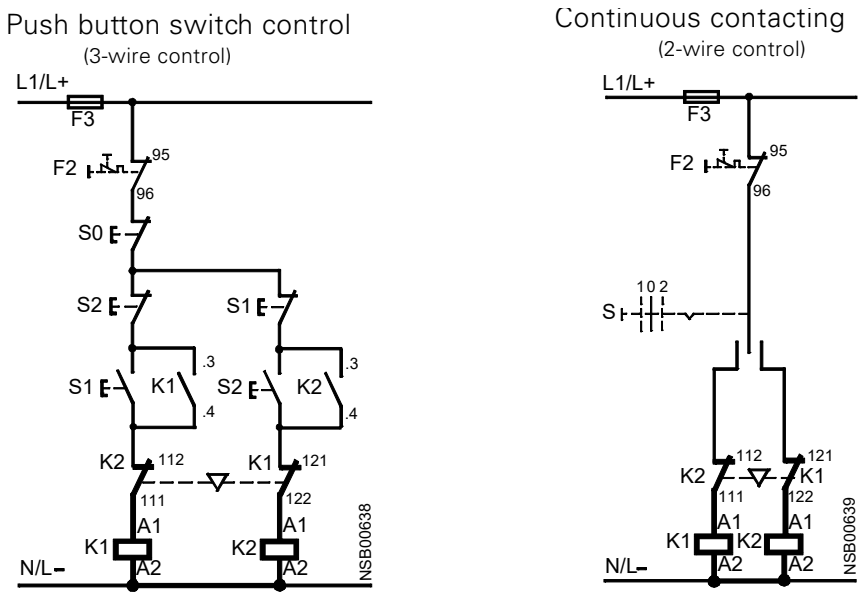

Fig. 3-19: Reversing contactor combination for control circuit (frame sizes S0 to S3)

Technical specifications

The technical specifications of the contactor combinations for reversing correspond to those of the basic units for the corresponding frame size.

3.3.9 3RA14 Wye-delta combinations

The 3RA1 wye-delta combinations in frame sizes S00 to S3 are available as follows:

- Fully assembled with the usual auxiliary switches in the following frame sizes:
  - S00-S00-S00
  - S0-S0-S0
  - S2-S2-S0
  - S2-S2-S2
  - S3-S3-S2

  Frame sizes S2 to S3 are delivered already mounted on a base plate.
- In USA sold only for self-assembly.
- S00 to S3 as a kit for self-assembly.

The same accessories can be used as for the basic units of the corresponding frame size (see Section 3.4, "Contactor accessories").

The following graphics show you the fully assembled wye-delta combinations in frame sizes S00 to S2:

Frame size S00

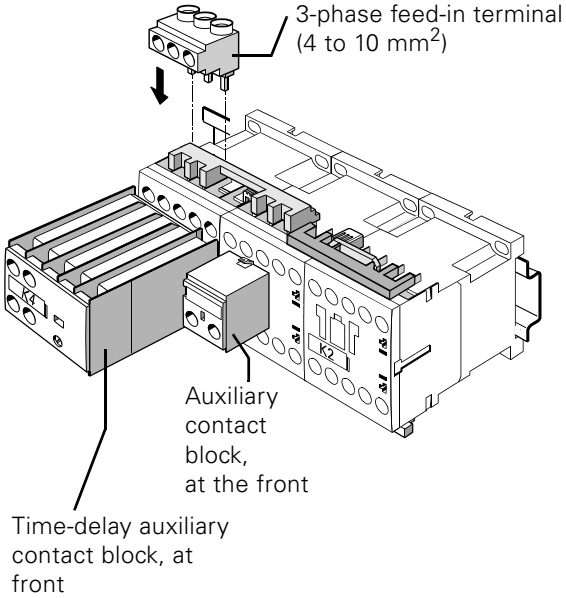

Frame size S0

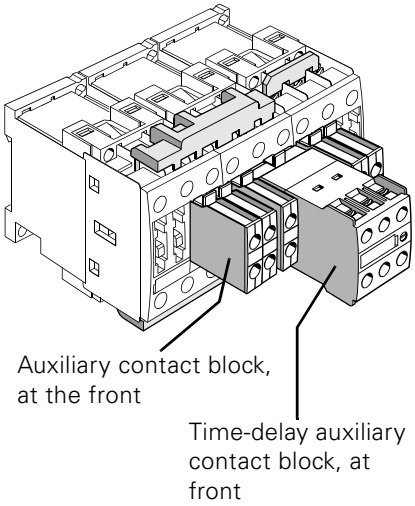

Frame size S2

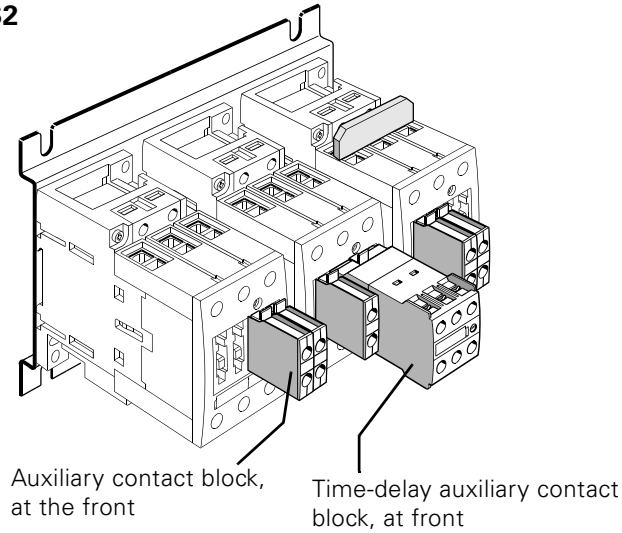

Fig. 3-20: Wye-delta combinations (frame sizes S00, S0, S2)

Frame size S2

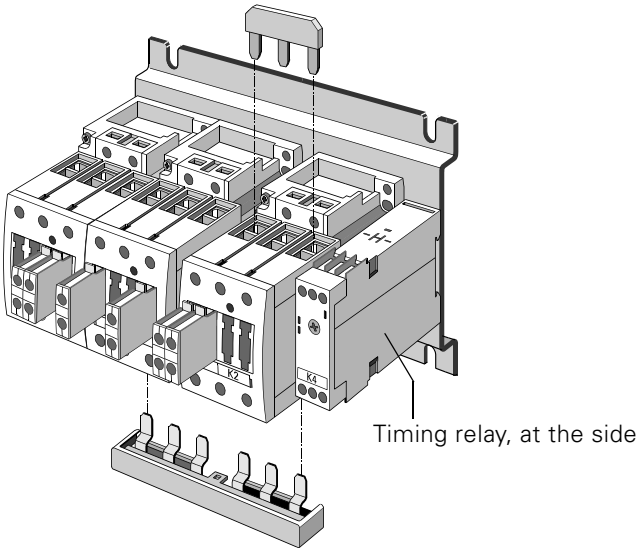

Fig. 3-21: Wye-delta combination (frame size S2)

Field of application

The wye-delta combination is used to start three-phase induction motors which require a low load torque during startup.

Starting current ratio

Wye-delta starting can only be used when the motor normally operates in delta mode, starts with no load, or if the load torque during the wye startup is small and does not increase rapidly.
In the wye stage, the motors can be loaded with approximately 50 % (torque class KL16) and 30 % (KL10) of its rated torque.
The starting torque is reduced to approximately 1/3 of the value at direct power-up.
The starting current is approximately 2 to 2.7 times the rated current for the motor.

Switch-over

Switching from the wye to the delta stage can only be carried out once the motor has completed startup to the rated speed.
The required switch-over time delay and interlock is included in the contactor combination.

Important
Motors that require an early switch-over are not suitable for wye-delta starting.

Overload protection

The fully assembled combinations are not equipped with overload protection. Overload relay (3RU11) and tripping devices for thermistor motor protection must be ordered separately.
The overload relays can be attached to the contactor directly or set up separately. The overload relay is set to 0.58 times the set current I_e.
See Chapter 4, "Overload relays" for further information.

Components of the wye-delta-combinations

The following table shows you the features of the fully assembled wye-delta combinations with time-delay auxiliary switch blocks with the wye-delta function (3RT19.6-2B...) and solid-state time relays with semiconductor output and the possible configuration, if you use the self-assembly kit:

	Frame size S00	**Frame sizes S0 to S3**
Fully assembled	At front (time-delay auxiliary switch block)	at the side (timing relay)
Kit	At front	• at the side (timing relay) • At front (time-delay auxiliary contact block)

Table 3-22: Configuration of the wye-delta combinations

Important
If a time-delay auxiliary switch block is mounted on the front of K3, an auxiliary switch block can only be mounted on the side of K3.

Accessories

The following basic unit accessories can also be used for wye-delta combinations:
- Auxiliary switch blocks (front, side)
- Surge suppressors
- Time-delay auxiliary switch blocks with wye-delta function

In addition, there are special accessories available for the wye-delta combinations:
- 3-phase feed-in terminals
- Wye-point links (parallel links)
- Terminals for contactor coils (S2/S3)
- Mechanical connectors
- Wiring modules

Terminal for contactor coils

In order to more easily reach coil terminals A1 and A2 in the wye-delta combination from contactors in frame sizes S2 and S3, extension terminals for contactor coils can be used.
For each combination, 2 x A1 and 1 x A2 are required.

Infeed

With conductor cross-sections > 2 x 2.5 mm^2 and 1 x > 4 mm^2, a feed-in terminal block must be used for the wye-delta combination in frame size S00. This makes the following conductor cross-sections possible:
- Frame size S00: up to 6 mm^2
- Frame size S0: up to 25 mm^2
- Frame size S2: up to 50 mm^2

Kits

The following graphic shows you the components of the kit for the wye-delta combination in frame size S00 and explains how to put it together:

Drawing: frame size S00	Step	Procedure
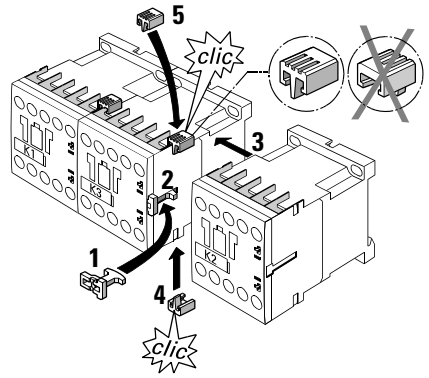	**1/2/3**	Place the mechanical interlock in the opening on the right side of the delta contactor K3. Push the wye contactor K2 and the delta contactor K3 together.
	4/5	Press a connecting clip for both the top and bottom onto the two contactors **(3)**. Make sure the clips are on the correct side.
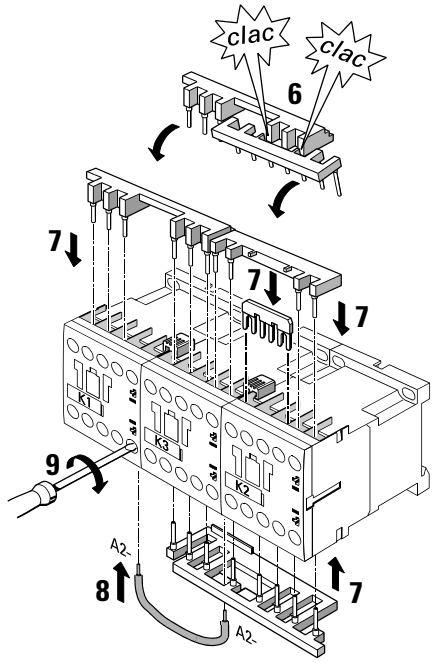	**6/7**	Break the upper link module off at the notches **(6)**, and attach the wiring modules and the wye jumper, to connect the main conducting paths (between line contactor (K1) and delta contactor (K3) and at the same time to interlock the combination electrically (K3-K2)).
	8/9	Wire A2 and tighten the terminal screws.

Table 3-23: Assembly of the wye-delta combination in frame size S00

The following graphic shows you the components of the kits for the wye-delta combinations in frame sizes S0 to S3 and explains how to put it together:

Drawing: frame size S0	Step	Procedure
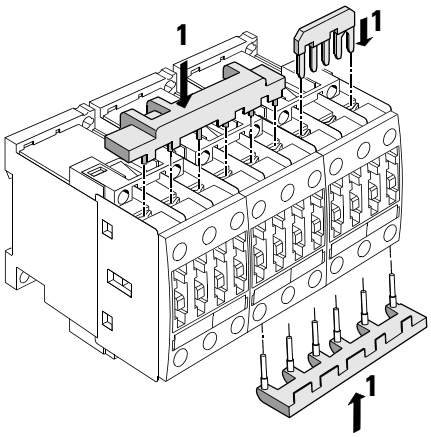	1	Attach the wiring modules and the wye-point link in order to connect the main conducting paths and to interlock the combination electrically.
Drawing: frame size S2 (S3)	**Step**	**Procedure**
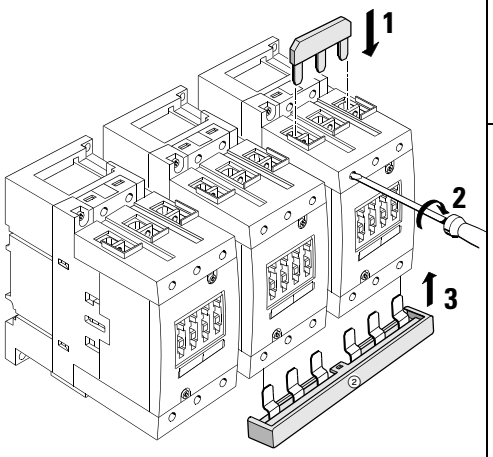	1/2	Place the wye-point link on the wye contactor. Tighten the main connections.
	3	Place the wiring module on the contactor undersides to connect the main conducting paths.
Drawing: frame sizes S3-S3-S2	**Step**	**Procedure**
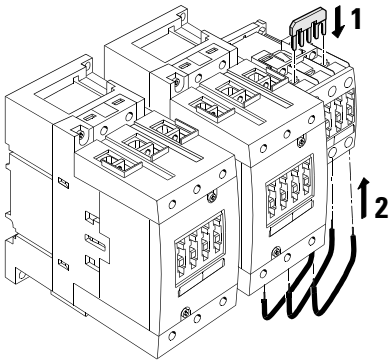	1	Attach the wye-point link to the wye contactor.
	2	Attach the wiring module to the contactor undersides to connect the main conducting paths.

Table 3-24: Assembly of the wye-delta combinations in frame sizes S0 to S3

Compensating for different depths for the mechanical interlock

In wye-delta combinations with contactors of different frame sizes, it is necessary to compensate for the mounting depth of the smaller contactor. One frame size is the maximum difference possible.
The following depth compensation must be made for a mechanical interlock attached at the side:

- S2-S2-S0: K3: 1.5 mm; K2: 0 mm
- S3-S3-S2: K3: 0 mm; K2: 27.5 mm

Mounting and connection

The wye-delta combinations have screw-type connections that are suitable for both screw-on and snap-on mounting on the 35 mm rail.

Conductor cross-sections

The permissible conductor cross-sections of the wye-delta combinations correspond to those of the basic units for the corresponding frame size.

Circuit diagrams

Main circuit:

S00

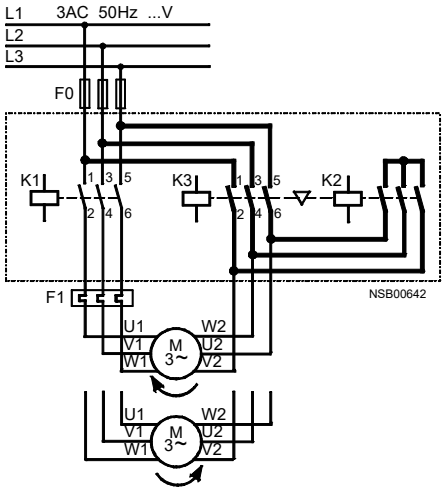

S0

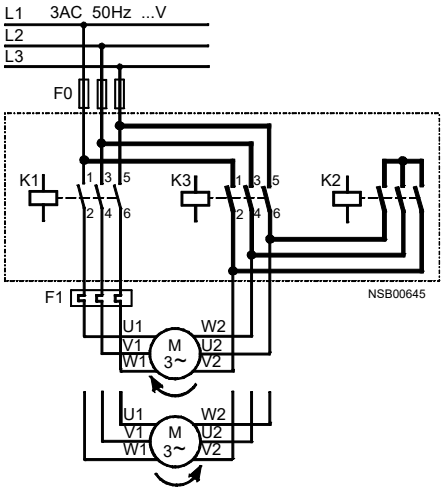

S2 to S3

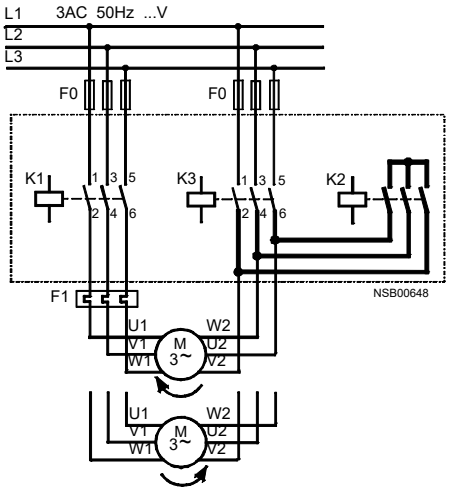

Fig. 3-22: Wye-delta combinations, main power circuit (frame sizes S00 to S3)

Control circuit S00

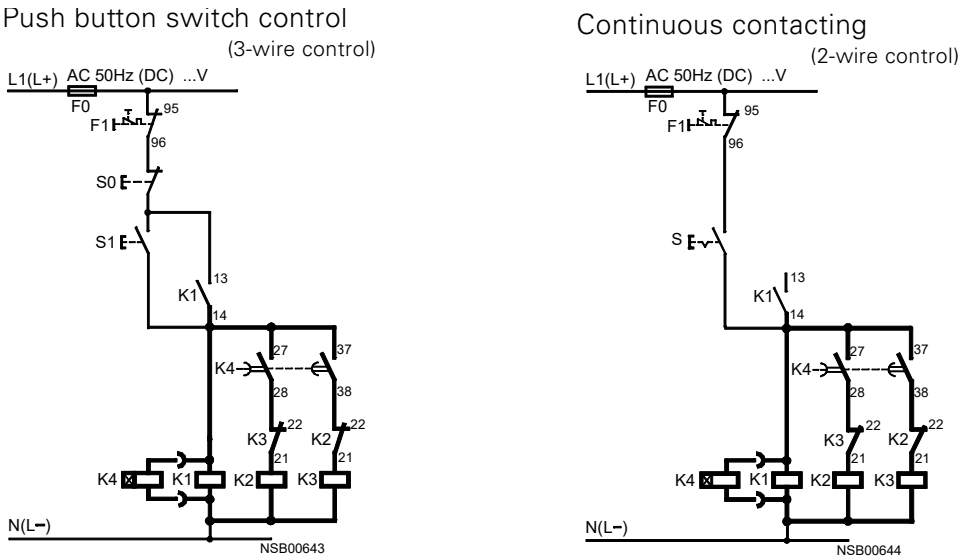

Fig. 3-23: Wye-delta combinations, control circuit (frame size S00)

Control circuit: S0 to S3

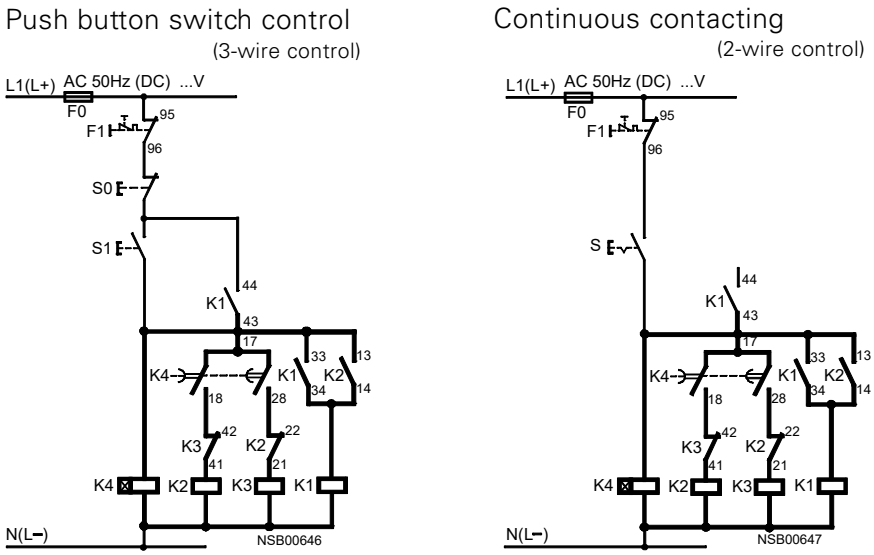

Fig. 3-24: Wye-delta combinations, control circuit (frame sizes S0 to S3)

S0 "Off" button
S1 "On" button
S Continuous contact maker
K1 Line contactor
K2 Wye contactor
K3 Delta contactor
K4 Time-delay auxiliary switch block or time relay

F0 Fuses
F1 Overload relay

Technical Data

The technical specifications of the wye-delta combinations correspond to those of the basic units for the corresponding frame size.

3.4 Accessories

Accessories for frame size S00

The accessories for contactors that switch motors and for control relays are of the same type. The accessories are attached at the front.

Accessories for frame sizes S0 to S3

The accessories are (with few exceptions) the same for frame sizes S0 to S3. They can be attached in different ways:

- Auxiliary switches can be attached at the front or the side.
- Surge suppressors can be attached at the top or the bottom.

The following graphic shows you **the accessories for the contactors and control relays that switch motors of frame size S00**:

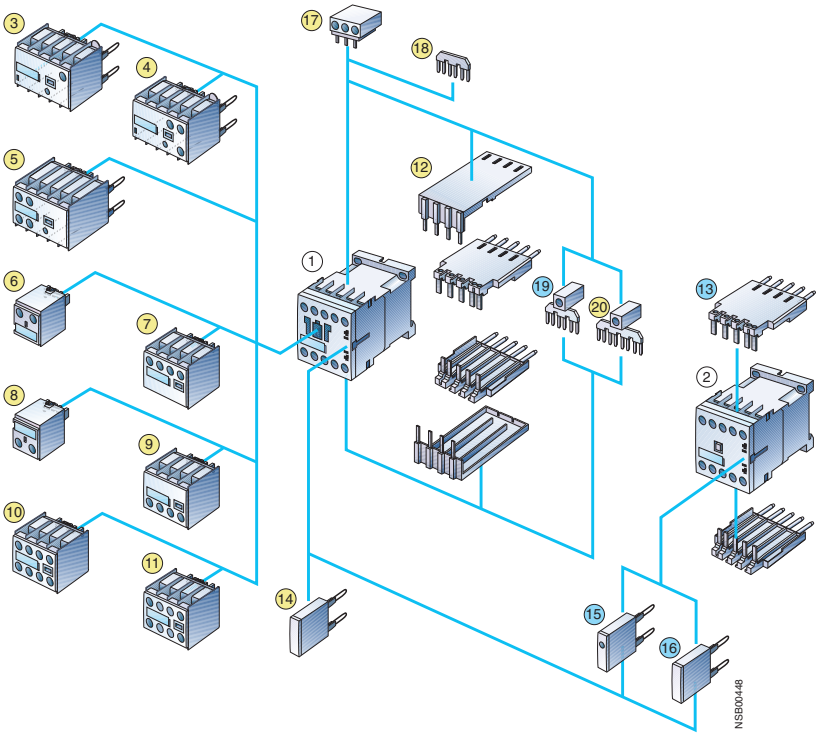

Fig. 3-25: Accessories for contactors of frame size S00

1 Contactor, frame size S00
2 Coupling relay
3 Solid-state time relay block, on-delay
4 Solid-state time relay block, off-delay
5 Auxiliary switch block, time-delay (on-delay or off-delay or wye-delta function)
6/7 1-pole auxiliary switch block, infeed from above or below
8/9 2-pole auxiliary switch block, infeed from above or below
10 4-pole auxiliary switch block (terminal markings in acc. with EN 50 012 or EN 50 005)
11 2-pole auxiliary switch block, standard or electronic type
12 Soldering pin adapter for contactors with 4-pole auxiliary switch block
13 Soldering pin adapter for contactors and contactor relays
14 Additional load module to increase the permissible residual current
15/16 Surge suppressor with and without LED
17 3-phase feed-in terminal
18 Parallel link (star-point link), 3-pole, without terminal
19 Parallel link, 3-pole, with terminal
20 Parallel link, 4-pole, with terminal

The following graphic shows you **the accessories for the control relays and contactor relays for auxiliary circuits of frame size S00**:

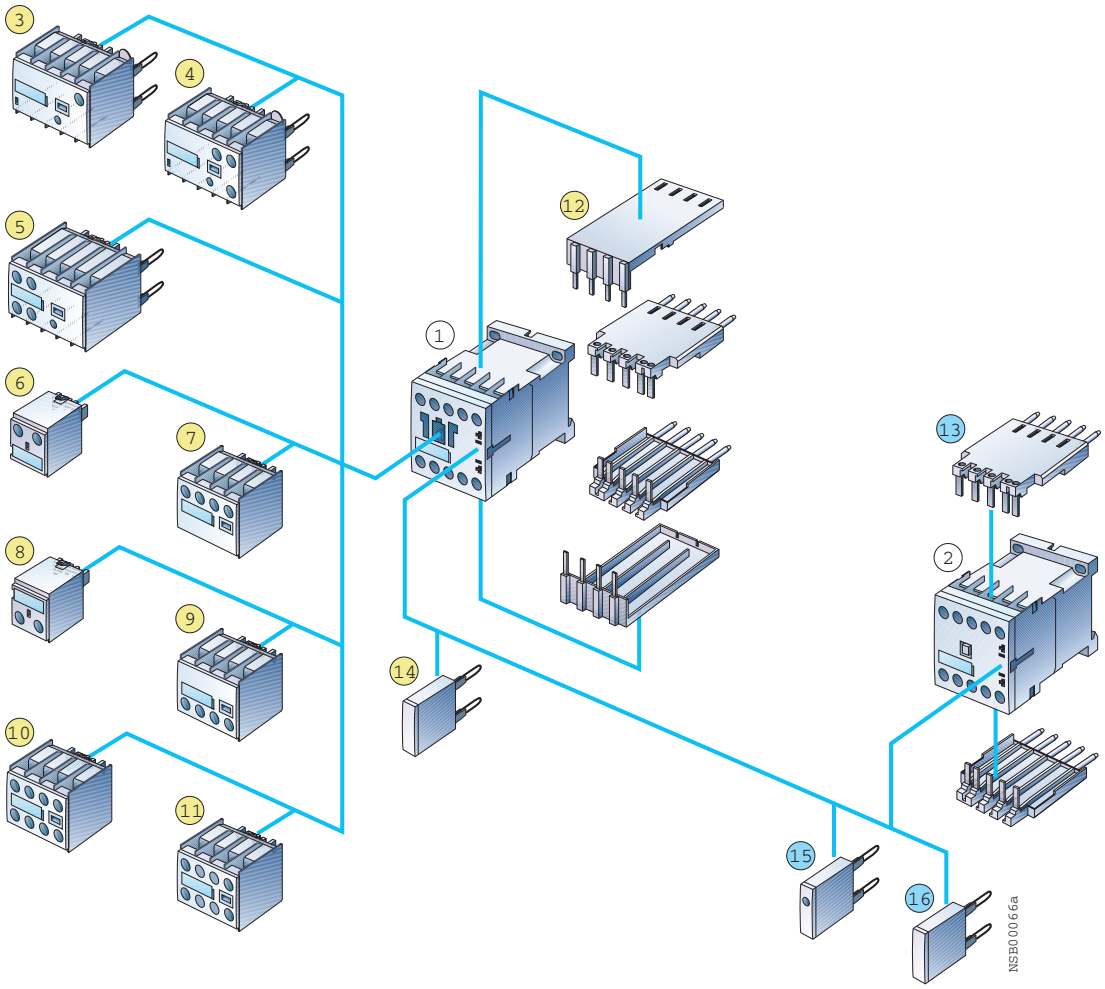

Fig. 3-26: Accessories for control relays/coupling relays of frame size S00

1 Control relay
2 Coupling relay for auxiliary circuits
3 Solid-state time relay block, on-delay
4 Solid-state time relay block, off-delay
5 Auxiliary switch block, time-delay (types: on-delay or off-delay)
6 1-pole auxiliary switch block, infeed from above
7 2-pole auxiliary switch block, infeed from above
8 1-pole auxiliary switch block, infeed from below
9 2-pole auxiliary switch block, infeed from below
10 4-pole auxiliary switch block (terminal markings in acc. with EN 50 011 or EN 50 005)
11 2-pole auxiliary switch block, standard or electronic type (terminal markings in acc. with EN 50 005)
12 Soldering pin adapter for control relays with 4-pole auxiliary switch block
13 Soldering pin adapter for control relays and contactor relays
14 Additional load module to increase the permissible residual current
15 Surge suppressor with LED
16 Surge suppressor without LED

The following graphic shows you **the accessories for the contactors of frame sizes S0 to S3**:

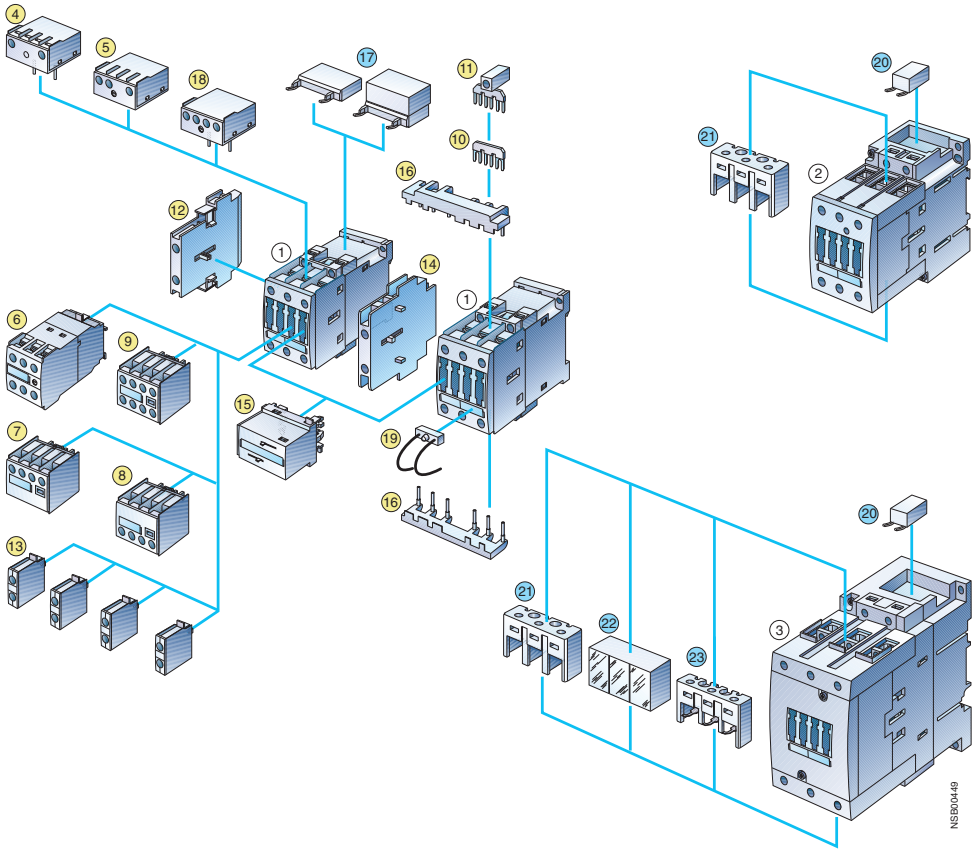

Fig. 3-27: Accessories for contactors of frame sizes S0 toS3

1 Contactor, frame size S0
2 Contactor, frame size S2
3 Contactor, frame size S3

For frame sizes S0 to S3:
4 Solid-state time relay block, on-delay
5 Solid-state time relay block, off-delay
6 Auxiliary switch block, time-delay
(on-delay or off-delay or wye-delta function)
7 2-pole auxiliary switch block, infeed from above
8 2-pole auxiliary switch block, infeed from below
9 4-pole auxiliary switch block
(Terminal markings in acc. with EN 50 012 or EN 50 005)
10 Parallel link (star-point link), 3-pole without terminal
11 Parallel link, 3-pole, with terminal
12 2-pole auxiliary switch block, attachable on the right or left side
(Terminal markings in acc. with EN 50 012 or EN 50 005)
13 1-pole auxiliary switch block (a maximum of 4 can be snapped on)
14 Mechanical interlock, attachable at the side
15 Mechanical interlock, attachable at the front
16 Wiring modules above and below (reversing operation)
17 Surge suppressor (varistor, RC element, diode combination),
attachable above or below (different for S0 and S2/S3)
18 Coupling link for direct attachment to the contactor coil
19 LED block to display the contactor function
For frame sizes S2 and S3 only:
20 Terminal for contactor coil for assembling contactor combinations
21 Terminal cover for box terminals
For frame size S3 only:
22 Terminal cover for lug connection and bar connection
23 Auxiliary connecting lead terminal, 3-pole

3.4.1 Attachable auxiliary switches for extending the auxiliary contacts

Integrated auxiliary contacts

Frame size S00
The contactors of frame size S00 have an auxiliary contact integrated in the basic unit.

Frame size S0 to S3
The contactors of frame sizes S0 to S3 do not have an integrated auxiliary contact in the basic unit.

Auxiliary switch blocks
Formats

Auxiliary switch blocks for extending the auxiliary contacts are available with screw-type or Cage Clamp terminals to attach to contactors. They are available in the following formats:
- At the front: 1 to 4-pole for frame sizes S00 to S3
- At the side: 2-pole for frame sizes S0 to S3

Different auxiliary switch blocks can be added to the 3RT1 basic units, depending on the application:
The following can be snapped onto the front of the contactors:
- Frame sizes S00 to S3: a 4-pole auxiliary switch block

or
- Frame sizes S0 to S3: up to four 1-pole auxiliary switch blocks

Frame sizes S0 to S3
If the depth of the installation space is limited, 2-pole auxiliary switches can be attached on the right and left side in frame sizes S0 to S3.
If 1-pole auxiliary switch blocks are used, note the location ID on the contactor.

1-pole/2-pole auxiliary switch blocks

1 or 2-pole auxiliary switch blocks that can be connected from above or below make the wiring simple and straightforward when setting up feeders. These auxiliary switch blocks are only available with a screw-type terminal. We recommend with the circuit breaker/MSP and contactor combination that you use auxiliary switch blocks that are connected from below. In the case of the contactor/overload relay combination, an auxiliary switch connected from above is more suitable.

Electronically optimized auxiliary switch blocks

The electronically optimized auxiliary switch blocks contain enclosed switching elements that are particularly suitable for switching low voltages and currents (hard gold-plated contacts) as well as for use in dusty atmospheres.
The rated operational current is I_e/AC-14 and DC-13: 1 to 300 mA, voltage: 3 to 60 V.
The electronically optimized auxiliary switch blocks are available as screw-type or Cage Clamp terminal types:

- Frame size S00 (3RH1911-.NF..): Has two enclosed auxiliary contacts (1 NO contact + 1 NC contact, 2 NO or 2 NC contacts)
- Frame sizes S0 to S3 (3RH1921-.FE22): Has two enclosed auxiliary contacts and two standard auxiliary contacts, each 1 NO contact + 1 NC contact

The switched current is in acc. with the VDE 0435 regulation for relays.

Auxiliary contacts

The following table gives you an overview of all the available auxiliary contacts:

Auxiliary contacts and attachable accessories	Frame size S00	Frame sizes S0 to S3
Integrated auxiliary contact	1 integrated auxiliary contact	—
4-pole auxiliary switch	Attachable at the front	Attachable at the front
2-pole auxiliary switch	Attachable at the front	—
1-pole auxiliary switch	—	Attachable at the front
1-pole auxiliary switch (infeed from 1 side)	Attachable at the front	—
2-pole auxiliary switch (infeed from 1 side)	Attachable at the front	Attachable at the front
2-pole auxiliary switch	—	Attachable at the side
Time-delay auxiliary switch blocks	Attachable at the front	Attachable at the front
Electronically optimized auxiliary switches	Attachable at the front	Attachable at the front Attachable at the side

Table 3-25: Auxiliary contact blocks

Adding to the auxiliary contacts

- The basic units of frame size S00 possess an integrated auxiliary contact and can be supplemented with up to 4 contacts using attachable auxiliary contacts.
- The basic units of frame sizes S0 to S3 do not have any auxiliary contacts, but auxiliary switches can be attached at the front or the side.

The following table shows you the expansion options for the different frame sizes:

Frame size	Auxiliary switch block	Connection
S00	1, 3 and 4-pole (attachable at the front)	Screw-type/Cage Clamp terminal
	Feeder auxiliary switch (attachable at the front): • 1-pole (1 NO or 1 NC contact) • 2-pole (1 NO + 1 NC or 2 NO contacts) Infeed from above or below possible	Screw-type terminal
S0 to S3	1 and 4-pole (attachable at the front) 2-pole (attachable at the side)	Screw-type/Cage Clamp terminal
	Feeder auxiliary switch (attachable at the front): • 2-pole (1 NO + 1 NC contact) • 2-pole (2 NO or 2 NC contacts) Infeed from above or below possible	Screw-type terminal

Table 3-26: Expansion options for auxiliary contact blocks

Front mount auxiliary contacts

Auxiliary contacts that can be attached at the front are hooked into the opening of the contactors and pulled down until they snap into place. They can be removed using the release lever in the middle.

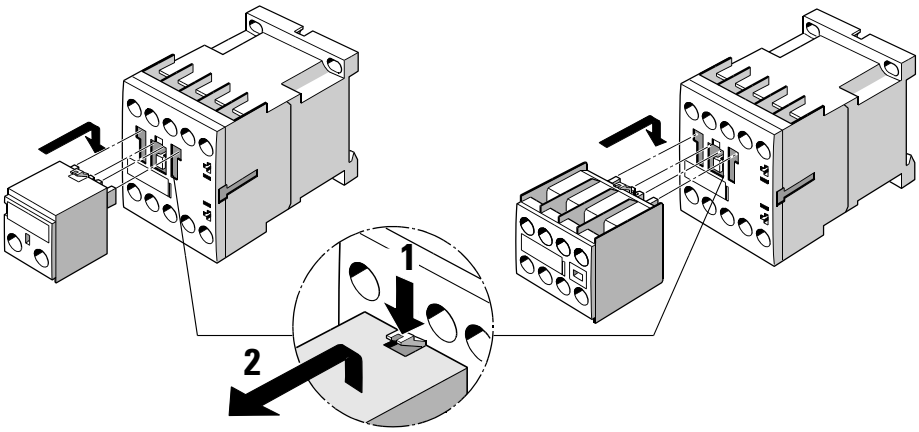

Fig. 3-28: Front mount auxiliary contacts

Auxiliary switches at side (S0 to S3)

The auxiliary switches are hooked onto the left or right side of the contactor and snapped onto it. They are removed again by pressing the ribbed surfaces.

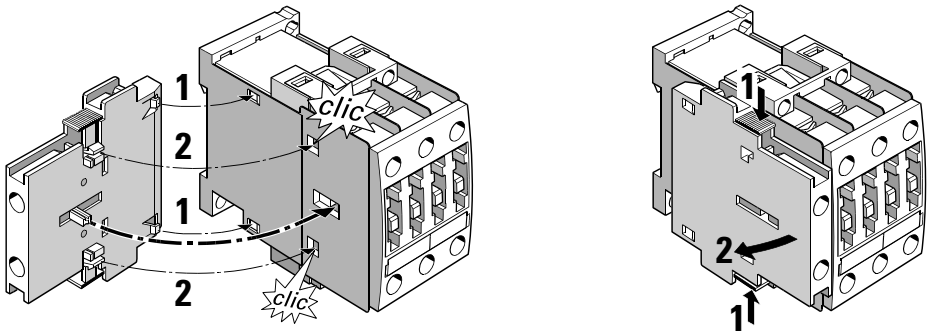

Fig. 3-29: Side mount auxiliary contacts

Note
When you use two 2-pole, side mount auxiliary contacts, you must attach an auxiliary switch block on the left and right in the interests of symmetry.

Maximum number of auxiliary contacts

The following table shows you the maximum number of auxiliary switches and their combination options:

Frame size S0 and S2 (3RT102./3RT103.)

1 auxiliary contact element	4 auxiliary contact elements	2 auxiliary contact elements	
		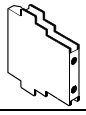	A maximum of 4 auxiliary contacts can be attached, and you can use any type of auxiliary switch. When you use two 2-pole, auxiliary switch blocks at the side, you must attach a block on the left and right in the interests of symmetry. In some situations, it is permissible to have more auxiliary contacts in frame size S2 (for more details, please contact Online Support).
max. 4	0	0	
max. 2	0	1	
0	1	0	
0	0	1+1	

Table 3-27: Possible auxiliary contact combinations (frame sizes S0/S2)

Frame size S3 (3RT104./3RT14)

1 auxiliary contact element	4 auxiliary contact elements	2 auxiliary contact elements	
		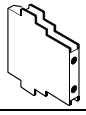	A maximum of 8 auxiliary contacts can be attached. Please note the following: Of these 8 auxiliary contacts, a maximum of four can be NC contacts. Symmetry must be preserved in the case of auxiliary switch blocks attached at the side.
4	0	1+1	
0	1	1+1	
0	0	2+2	

Table 3-28: Possible auxiliary contact combinations (frame size S3)

Contactors with 4 main contacts and capacitor-switching contactors

	S00	S0	S2/S3
Contactors with 4 main contacts	4 auxiliary contacts	Maximum of 2 auxiliary contacts (attached at the side or snapped on at the top)	Maximum 4 auxiliary contacts (attached at the side or snapped on at the top)
Capacitor-switching contactors	An additional 2-pole auxiliary switch block on each side (3RH1921-1EA..: 2 NO, 2 NC or 1 NO + 1 NC contact)		

Table 3-29: Possible auxiliary switch combinations with 4-pole/capacitor-switching contactors

Switching of the auxiliary contact elements

With the standard type of auxiliary switch, when the contactors are switched on, first the NC contacts are opened and then the NO contacts are closed.

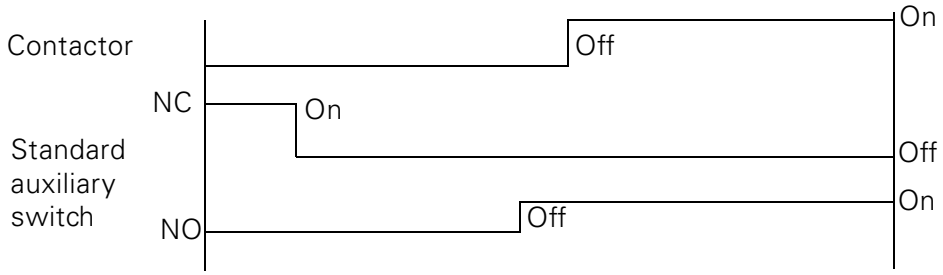

Fig. 3-30: Switching of the auxiliary contact elements

Auxiliary contact elements with make-before-break contacting

The following table shows auxiliary contact elements with make-before-break contacting:

S00	Auxiliary switch type	**S0 - S3**	Auxiliary switch type
3RH1911-.FC22	22U, 2 NO + 2 NC contacts Screw-type/Cage Clamp terminal	3RH1921-.FC22	22U, 2 NO + 2 NC contacts Screw-type/Cage Clamp terminal
3RH1911-.FB11	11U, 1 NO + 1 NC contact Screw-type/Cage Clamp terminal		
3RH1911-.FB22	11/11U. 1 NO+1 NC+1PS [1]) +1 lagging NC[2]) contact Screw-type/Cage Clamp terminal		
		3RH1921-1CD01	1 NO contact, leading Screw-type terminal
		3RH1921-1CD10	1 NC contact, lagging Screw-type terminal

Table 3-30: Auxiliary switches with make-before-break contacting

1) Leading NO contact
2) Lagging NC contact

3.4.1.1 Terminal markings of the contactors frame sizes S00 to S3

In contactors of frame size S00 with an integrated auxiliary contact, the terminal marking complies with EN 50 012. This also applies to contactors that are available as complete devices, frame sizes:

- S0 to S3 with mounted auxiliary contact blocks 2 NO + 2 NC

Expanding the contactors of frame size S00

All the contactors of frame size S00 (3 and 4-pole) can be expanded with auxiliary switch blocks with the identification numbers 40 to 02 in acc. with EN 50 005 as follows:

- Frame size S00 with an integrated auxiliary contact (identification number 10E or 01) for contactors with 3 or 5 auxiliary contacts
- Frame size S00 with 4 main contacts for contactors with 2 or 4 auxiliary contacts

Note
The identification numbers on the auxiliary switch blocks only apply to the attached auxiliary switches.

Expanding the contactors with 1 integrated NO contact, S00 (3RT101.-...01)

Contactors with one NO contact as an auxiliary contact with screw-type or Cage Clamp terminals, identification number 10E, can be expanded with auxiliary switch blocks with terminal markings in acc. with DIN EN 50 012 for contactors with 2, 4, and 5 auxiliary contacts. The terminal markings of the complete contactors comply with EN 50 012. The identification numbers 11E, 22E, 23E, and 32E on the auxiliary switch blocks apply to the complete contactors.

Important
Auxiliary switch blocks in acc. with EN 50 012 can only be combined with contactors of frame size S00 that have 1 NO contact in the basic unit because they are coded. These auxiliary switch blocks cannot be combined with contactors that have an NC contact in the basic unit (identification number 01).

Auxiliary contacts S00

The following graphic shows you the auxiliary contacts that can be used to expand the contactors of frame size S00 (terminal marking in acc. with EN 50 012 or EN 50 005):

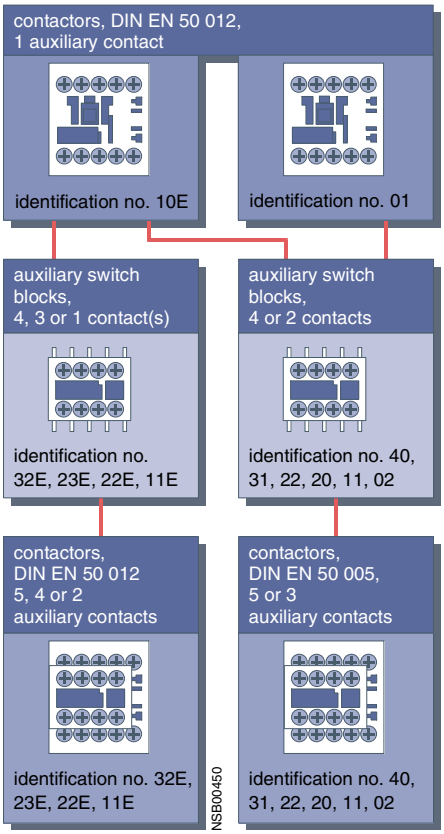

Fig. 3-31: Auxiliary contacts, contactors for switching motors (frame size S00)

Expanding the contactors of frame sizes S0 to S3

With contactors of frame sizes S0 to S3, you can also attach 1-pole auxiliary switch blocks instead of 4-pole auxiliary switch blocks.
The terminal markings of the 1-pole auxiliary switch blocks consist of sequence numbers (location ID) on the basic unit and function numbers on the auxiliary switch blocks.

Auxiliary contacts S0 to S3

The following graphic shows you the front mount auxiliary contacts that can be used to expand the contactors of frame sizes S0 to S3 (terminal marking in acc. with EN 50 005 or EN 50 012):

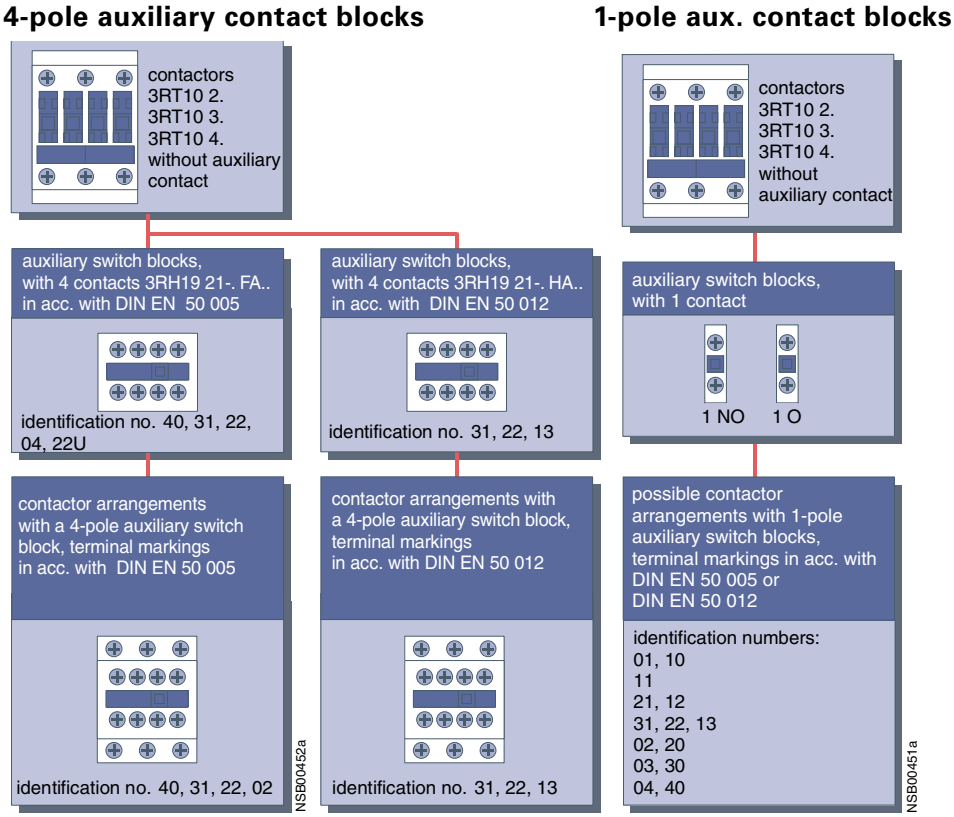

Fig. 3-32: Auxiliary contacts for contactors for the switching of motors (frame sizes S0 to S3)

3.4.1.2 Terminal markings of the contactors and control relays combined with auxiliary switch blocks

Terminal markings in acc. with EN 50 005

The terminal markings for contactors are defined in EN 50 005 that contains general directives. The following summarizes the basic rules that apply to switching elements of auxiliary circuits:

- The terminals of auxiliary contact elements are designated by two-digit numbers.
- The digit in the unit place is a function number (NC contact: 1 and 2, NO contact: 3 and 4).
- The digit in the tens place is a sequence number (all the switching elements of the same function must have different sequence numbers).

Identification numbers (EN 50 005)

The identification numbers mean:
Switching devices with a fixed number of auxiliary contact elements (NO contacts or NC contacts) can be assigned a two-digit identification number. The first digit represents the number of NO contacts and the second one the number of NC contacts.
There is no information on the sequence of NO contacts and NC contacts in the contactor/control relay.

Note
The identification numbers on the auxiliary switch blocks only apply to the attached auxiliary switches.

EN 50 012/ EN 50 011

For certain equipment such as auxiliary contact elements of contactors and control relays, the EN 50 012 and EN 50 011 standards also apply.
The EN 50 012 defines the terminal markings and identification numbers for auxiliary contact elements of particular contactors.
The terminal markings of the auxiliary contact elements match the terminal markings of corresponding control relays with the ID letter E (in acc. with EN 50 011). For auxiliary contact elements of contactors with the same identification number, the terminal marking must correspond to the sequence defined in the standard.

Graphical symbols for auxiliary contact elements

Below are some examples of graphical symbols for auxiliary contact elements of contactors that comply with EN 50 012:

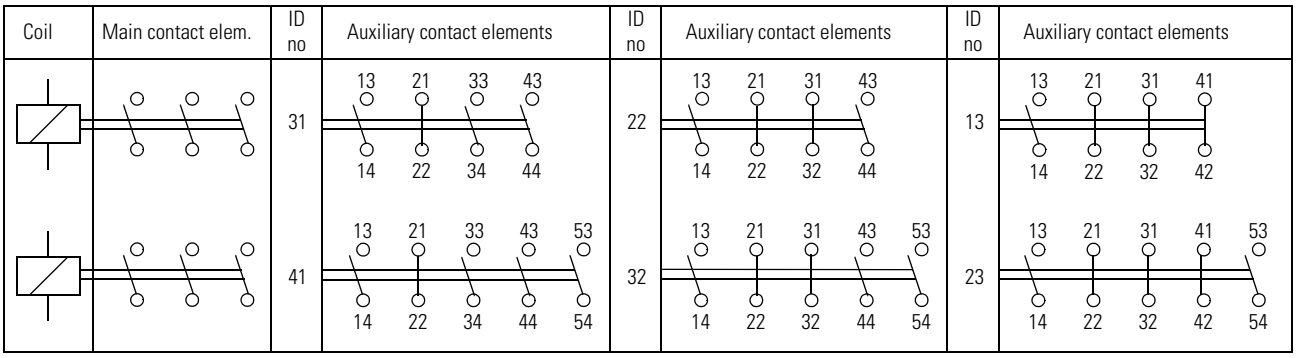

Fig. 3-33: Graphical symbols for auxiliary contact elements in acc. with EN 50 012 (excerpt)

Device circuit diagrams

The following device circuit diagrams of the auxiliary switch blocks for contactors that switch motors contain the terminal markings in acc. with EN 50 012:

3RT101 Contactor (Frame size S00)

2 NO + 2 NC contacts
ID number. : 22E

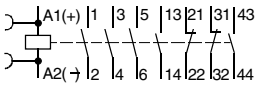

2 NO + 3 NC contacts
ID number: 23E

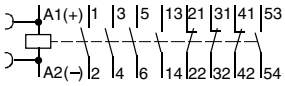

3 NO + 2 NC contacts
ID number: 32E

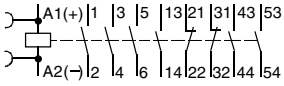

3RT102 contactors to 3RT104, 3RT14 (Frame sizes S0 to S3)

2 NO + 2 NC contacts
ID number: 22

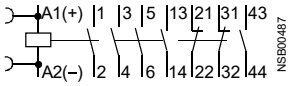

4-pole front mount auxiliary contact blocks 3RH1921-1HA/1XA..,r

3 NO + 1 NC contacts
ID number: 31E

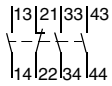

2 NO+ 2 NC contacts

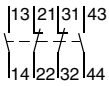

2 NO+ 2 NC contacts
ID number: 22

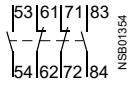

1 NO + 3 NC contacts

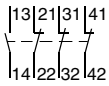

Fig. 3-34: Device circuit diagrams of the auxiliary switch blocks (EN 50 012)

3.4.1.3 Auxiliary switches that can be attached to 3RH1 control relays

The 3RH1 control relays can be expanded by up to 4 contacts using attachable auxiliary switch blocks.

Definition: EN 50 011

The main standard for the designation of switching elements for the control relays is EN 50 011, which defines the terminal markings, identification numbers, and identification letters of certain control relays using a specific sequence of the switching elements. The number, type, and position of the switching elements must be specified using an identification number followed by an identification letter.
In the case of 8-pole control relays, the letter "E" means that four NO contacts have to be arranged on the lower (rear) contact level.

Expansion using auxiliary switch blocks

The following example of an control relay with 4 NO contacts (contact designation in acc. with EN 50 011 and EN 50 005) explains how auxiliary switch blocks are added on:

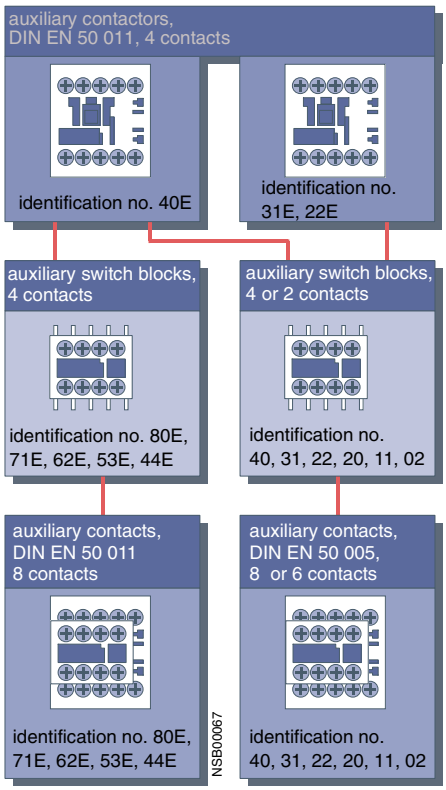

Fig. 3-35: Auxiliary contacts for control relays

Contact designation

Auxiliary switch blocks - for example, 3RH1911-1GA22 (2 NO + 2 NC contacts) in acc. with EN 50 011 - can only be attached to control relays with 4 NO contacts (3RH1140-.....) because they are coded. The identification number (62E) printed on the auxiliary switch block (6 NO + 2 NC contacts) applies to the whole contactor.
NO and NC contacts are in the same position on all the control relays with the identification number 62E (EN 50 011).
This means contactors can be replaced without changing the wiring, which therefore makes wiring very easy. You can attach auxiliary switch blocks that comply with EN 50 005 on all 3RH11 control relays and 3RT101 motor contactors. For example, the 3RH1911-1FA22 auxiliary switch block (2 NO + 2 NC contacts) has the identification number 22, and this only applies to the attached auxiliary switch block.

Graphical symbols of the control relays

Below are some examples of graphical symbols for control relays with the identification letter E that comply with EN 50 011:

4-pole control relays

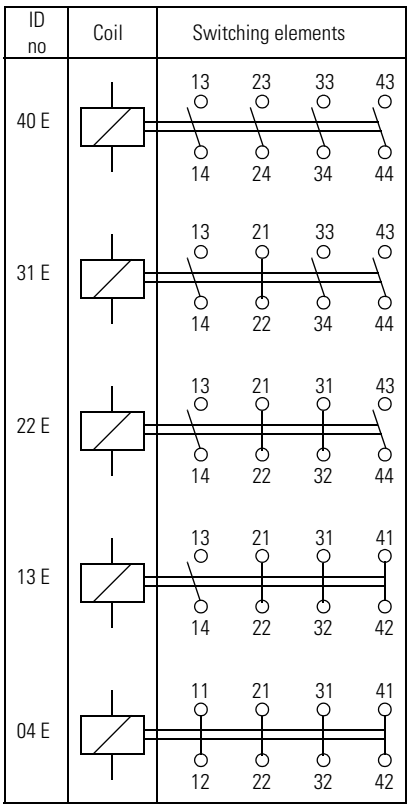

8-pole control relays

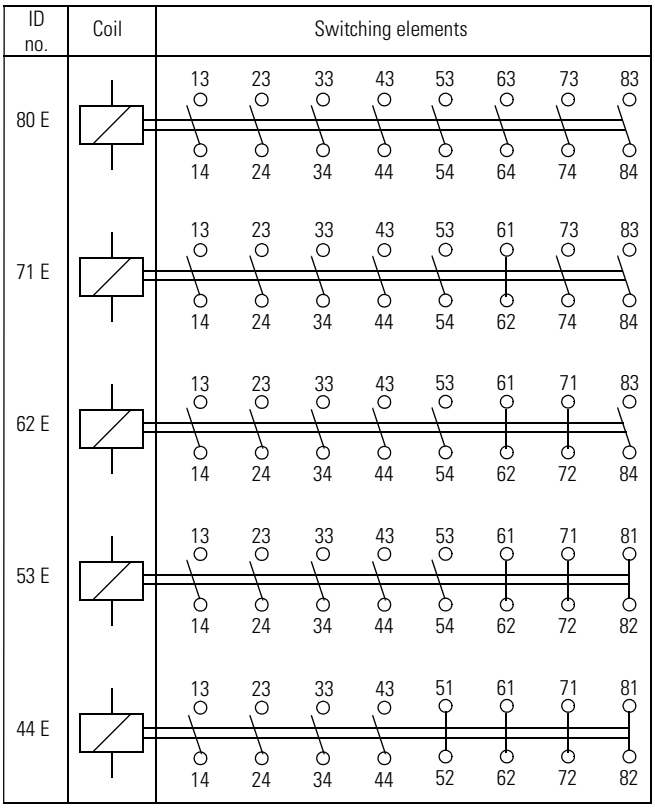

Fig. 3-36: Graphical symbols for auxiliary contactors (control relays) in acc. with EN 50 011 (excerpt)

Device circuit diagrams

The following device circuit diagrams of the control relays contain terminal markings in acc. with EN 50 011:

4 NO contacts
Identification number: 40 E

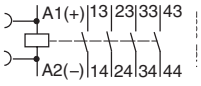

3 NO contacts + 1 NC contact
Identification number: 31 E

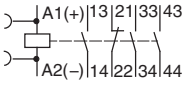

2 NO contacts + 2 NC contacts
Identification number: 22 E

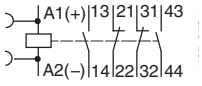

8 NO contacts
Identification number: 80 E

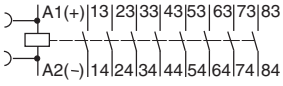

7 NO contacts + 1 NC contacts
Identification number: 71 E

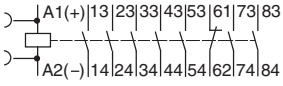

6 NO contacts + 2 NC contacts
Identification number: 62 E

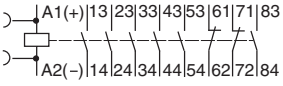

5 NO contacts + 3 NC contacts
Identification number: 53 E

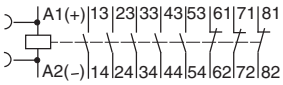

4 NO contacts + 4 NC contacts
Identification number: 44 E

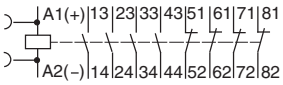

Fig. 3-37: Device circuit diagrams

Position diagrams

The following position diagrams of the auxiliary switches of frame sizes S00 to S3 also apply to leading and lagging contacts:

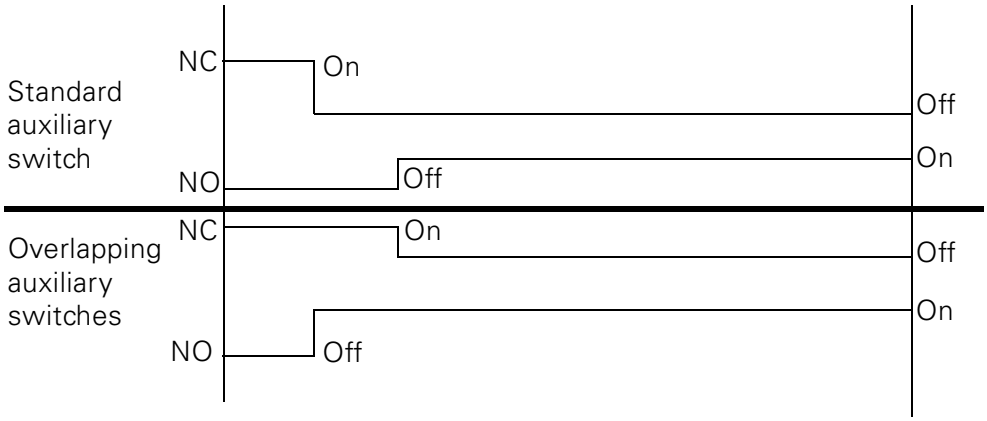

Fig. 3-38: Position diagrams of the auxiliary switches (frame sizes S0 to S3)

3.4.2 Time-delay auxiliary switches

Variants

The following variants of the time-delay auxiliary switch are available:
- On-delay
- Off-delay without auxiliary supply
- Wye-delta function

On-delay and off-delay functions

The time-delay auxiliary switch in the on-delay or off-delay variants has the following features:
- It facilitates time-delayed functions up to 100 s
- 3 single time areas
- Contains a relay with 1 NO contact and 1 NC contact that switches the on-delay or off-delay depending on the version.

Wye-delta function

The time-delay auxiliary switch with wye-delta function has the following features:
- Equipped with a delayed and an instantaneous NO contact between which there is an idle time of 50 ms.
- The delay time of the NO contact can be set at between 1.5 s to 30 seconds.
- The contactor on which the time-delay auxiliary switch block is mounted functions instantaneously.

Conductor cross-sections

The permissible conductor cross-sections correspond to the auxiliary conductor terminals of the corresponding frame size.

3.4.2.1 Frame size S00 (3RT1916-2E, -2F, -2G)

Description

The time-delay auxiliary switch of frame size S00 has the following features:
- The power supply is provided using plug-in contacts directly via the coil connections of the contactors, parallel to A1/A2.
- The time function is activated when the contactor that has the auxiliary switch block mounted on it is turned on.
- The off-delay version functions without an auxiliary supply.
- The minimum on-time is 200 ms.
- To dampen switching overvoltages of the contactor coil, a varistor is integrated in the time-delay auxiliary switch of frame size S00.

Information on mounting

Note about the off-delay without auxiliary supply function:
The position of the output contacts is not defined at shipment (bistable relay). Apply the control supply voltage once, and then switch it off again to set up the initial state of the contacts.

Important
The time-delay auxiliary switch cannot be added to contactor relays.

Installation/removal

Caution
Switch off the supply voltage to A1/A2 before you install or remove the time-delay auxiliary switch block.

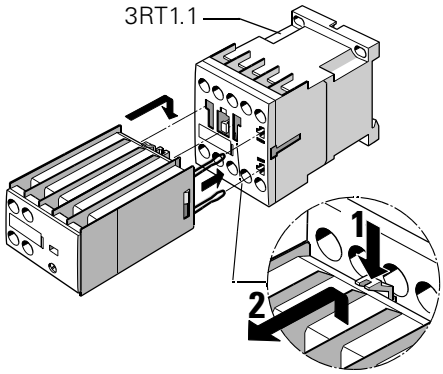

The time-delay auxiliary switch is attached to the front of the contactor.

Fig. 3-39: Time-delay auxiliary switch block (frame size S00)

Connection

When they are attached, the connections for the rated control supply voltage are connected to the contactor below by the integrated spring contacts of the time-delay auxiliary switch.

Function diagrams

3RT1916-2E

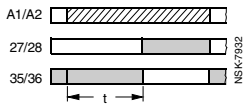

On-delay
1 NO and 1 NC contact

3RT1916-2F

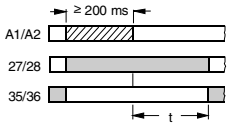

Off-delay
Without auxiliary supply
1 NO and 1 NC contact

3RT1916-2G

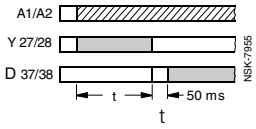

Wye-delta function
1 NO contact, instantaneous
1 NO contact, delayed

Fig. 3-40: Function diagrams of the time-delay auxiliary switches (frame size S00)

3.4.2.2 Frame sizes S0 to S3 (3RT1926-2E, -2F, -2G)

Description

The time-delay auxiliary switch for frame sizes S0 to S3 has the following features:

- The power supply of the time-delay auxiliary switch is via two terminals (A1/A2).
- The time delay for the time-delay auxiliary switch can be activated by parallel connection to any contactor coil, or by any source of voltage.
- The off-delay version works without an auxiliary supply.
- The minimum on-time is 200 ms.
- In addition to the time-delay auxiliary switch, a 1-pole auxiliary switch block can be snapped onto the front of the contactor.
- The time-delay auxiliary switch does not have any integrated overvoltage damping for the connected contactor.

Information on mounting

Note about the off-delay without auxiliary supply function:
The position of the output contacts is not defined at shipment (bistable relay). Apply the control supply voltage once, and then switch it off again to set up the initial state of the contacts.

Installation/removal

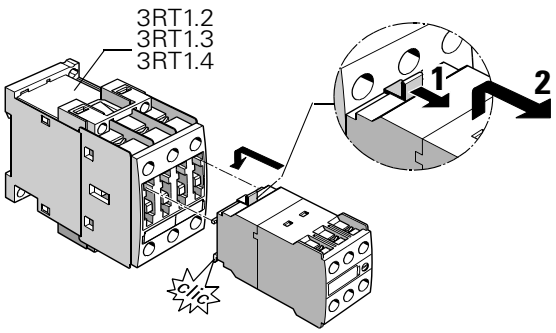

The time-delay auxiliary switch is attached to the front of the contactor.

Fig. 3-41: Time-delay auxiliary switch block (frame sizes S0 to S3)

Connection

The A1 and A2 terminals for the rated control supply voltage of the time-delay auxiliary switch are connected to the respective contactor with cables.

Terminal markings

Because an additional auxiliary switch block can be snapped onto the contactor, the terminals of the delayed contacts have been designated as -5/-6 (NC contact) and -7/-8 (NO contact).

Function diagrams

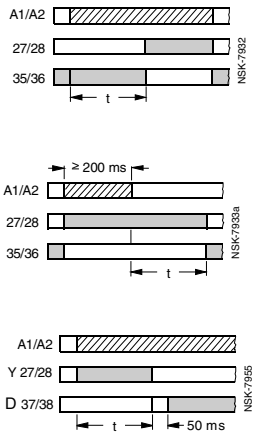

On-delay
1 NO and 1 NC contact

Off-delay without auxiliary supply
1 NO and 1 NC contact

Wye-delta function
1 NO contact, instantaneous
1 NO contact, delayed

Fig. 3-42: Time-delay auxiliary switches, function diagrams (frame sizes S0 to S3)

3.4.3 Solid-state time relay blocks with semiconductor output

The solid-state time relay blocks are suitable for AC and DC operation.
To dampen switching overvoltages of the contactor coil, a varistor is integrated.

Variants

The following variants of the time-delay auxiliary switch are available:
- On-delay (integrated varistor)
- Off-delay with auxiliary supply (integrated varistor)

On-delay and off-delay functions

The time-delay auxiliary switch in the on-delay or off-delay with an auxiliary supply has the following features:
- It facilitates time-delayed functions up to 100 seconds.
- 3 individual time ranges
- Contactors with a solid-state time relay block close and open with a delay according to the time set.

Connection: on-delay time relay block

The on-delay time relay block is connected in series to the contactor coil; the A1 terminal of the contactor coil must not be separately connected to the control supply.

Connection: off-delay time relay block

When an off-delay time relay block is attached, the contactor coil is connected via the time relay block; the A1 and A2 terminals of the contactor coil must not be separately connected to the control supply.

Conductor cross-sections

The permissible conductor cross-sections correspond to the auxiliary conductor terminals of the corresponding frame size.

Notes on configuration

The control of loads parallel to the start input is not permissible in AC operation. See the relevant circuit diagram ① below.
The off-delay solid-state time relay blocks (3RT1916-2D.../3RT1926-2D...) have a live start input (B1). With AC voltage, this can imitate the control of a parallel load on the B1 terminal. In this case, an additional load (contactor K3, for example) should be wired as shown in circuit diagram ②.

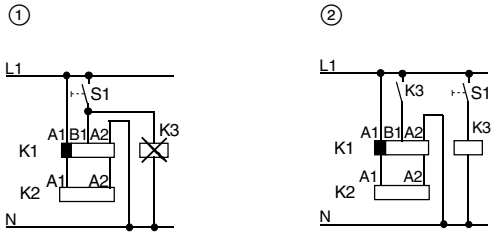

K1 time relay block
K2 contactor

Fig. 3-43: Control of loads

3.4.3.1 Frame size S00 (3RT1916-2C, -2D)

Caution
Switch off the supply voltage to A1/A2 before you install or remove the solid-state time relay block.

Installation/removal

Important
The time-delay auxiliary switch cannot be attached to contactor relays.

The solid-state time relay block of frame size S00 is attached to the front of the contactor and latched into place with a pushing movement.

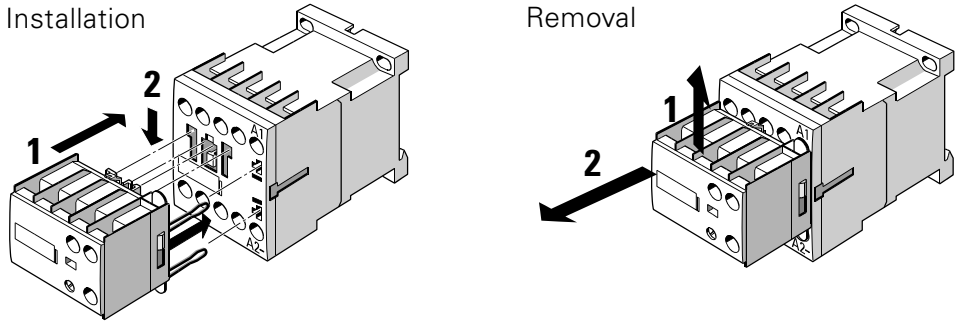

Fig. 3-44: Solid-state time relay block with semiconductor output, installation (frame size S00)

Connection

When the solid-state time relay block is installed, it is connected at the same time with the A1 and A2 coil connections of the contactor by the plug-in pins. Coil connections of the contactor that are not required are covered by covers on the housing of the time relay block, thus preventing inadvertent connection.

Function diagrams

3RT19 16-2C, on-delay

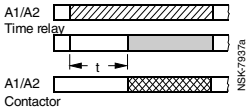

3RT19 16-2D, off-delay

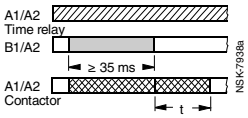

Fig. 3-45: Solid-state time relay block with semiconductor output, function diagrams (frame size S00)

Circuit diagrams

3RT19 16-2C...
on-delay
Frame size S00

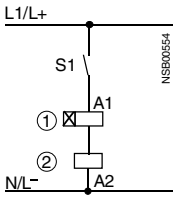

3RT19 16-2D...
off-delay (with auxiliary voltage)
Frame size S00

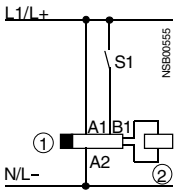

① Solid-state time relay block
② Contactor

Fig. 3-46: Solid-state time relay with semiconductor output, circuit diagrams (frame size S00)

3.4.3.2 Frame sizes S0 to S3 (3RT19 26-2C, -2D)

Note on configuration

Caution
The solid-state time relay block with a semiconductor output (3RT1926-2C..., -2D...) must not be used for 3RT104 contactors of frame size S3 with U_S ≤ 42 V because the coil current used for the output semiconductor is too high.
The solid-state time relay block must not be attached to the lower coil connections.

Installation/removal

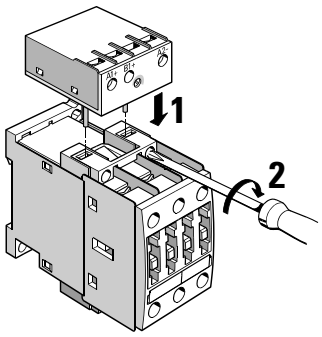

The solid-state time relay block for the contactors of frame sizes S0 to S3 is attached at the top on the A1 and A2 coil connections of each contactor, connecting the time relay electrically and mechanically with pins.

Fig. 3-47: Solid-state time relay with a semiconductor output, installation (frame sizes S0 to S3)

Circuit diagrams

3RT19 26-2C...
on-delay
Frame sizes S0 to S3

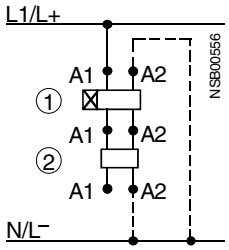

A2 can either be connected to the contactor or the timing relay with N(L-).
- - - connect as preferred

3RT19 26-2D...
off-delay (with auxiliary supply voltage)
Frame sizes S0 to S3

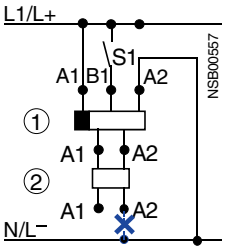

A2 may only be connected with N(L-) from the timing relay
x do not connect!

① time relay block
② contactor

Fig. 3-48: Solid-state time relay with semiconductor output, circuit diagrams

Function diagrams

3RT19 26-2C..1, on-delay

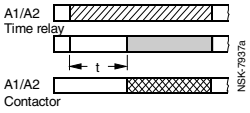

3RT19 26-2D..1, off-delay

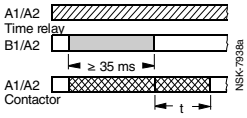

Fig. 3-49: Solid-state time relay with semiconductor output, function diagrams

3.4.4 Additional load module (3RT1916-1GA00)

Field of application

The additional load module for the contactors of frame size S00 is used to increase the permissible residual current and to limit the residual voltage of SIMATIC semiconductor outputs.

Mode of operation

Malfunctions can sometimes occur when SIRIUS contactors and auxiliary contactors of frame size S00 work together with SIMATIC output modules whose residual current at signal "0" is higher than is permissible for the contactors of frame size S00. The maximum permissible residual current of the electronic components is 3 mA for contactors of frame size S00 with a 230 V AC drive, and in the case of higher residual currents, the contactors no longer drop down.
The additional load module is used to ensure the safe switching off of S00 contactors in the case of direct control by programmable controllers via 230 V AC semiconductor outputs.
The additional load module takes on the function of overvoltage damping at the same time.

Technical specifications

Rated voltage	AC 50/60 Hz 180 V to 255 V
Rated output power	1.65 W at 230 V
Permissible contactor types	3RT1.1 3RT1.
Associated coil type	P0 (230 V, 50/60 Hz) N2 (220 V, 50/60 Hz) P6 (220 V, 50 Hz/240 V, 60 Hz)
Operating range	0.8 to 1.1 Us

Installation

The additional load is connected in parallel to the contactor coil. It has the same construction as the surge suppressor and is attached on the front of the contactors with or without an auxiliary switch block.

3.4.5 Coupling element for frame sizes S0 to S3 (3RH1924-1GP11)

Field of application

The 3RH1924-1GP11 coupling link is intended for contactors of frame sizes S0 to S3. It can be controlled by a programmable controller output because the operating range of 17 to 30 V DC is permissible.

Mode of operation

A contactor of frame size S0 to S3 can be controlled, for example, at 24 V DC with a low control level (< 0.5 W) from a programmable controller output. The control voltage for the coupling link and the rated control supply voltage for the contactor are electrically isolated. An LED indicates the switching state of the coupling link.
To dampen switching overvoltages of the contactor coil, a varistor is integrated in the coupling link.

Installation

Caution
Switch off the supply voltage applied to L1 and N before installation.

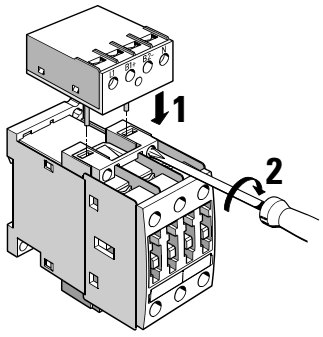

Fig. 3-50: Coupling link (frame sizes S0 to S3)

The coupling link is inserted with its two integrated mounting pins directly onto the coil connections of the contactor.

Conductor cross-sections

The permissible conductor cross-sections correspond to the auxiliary conductor terminals of the corresponding frame size.

Circuit diagram

Coupling link 3RH19 24-1GP11 for control from a PLC

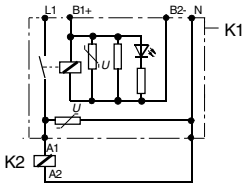

K1 Coupling link
K2 Contactor

B1+/B2-: Control voltage 24 V DC
L1/N: Rated control supply voltage for the selected contactor

Fig. 3-51: Coupling link, circuit diagram (frame sizes S0 to S3)

Technical specifications

You can find the technical specifications of the coupling link in Section 6.7, "Technical specifications".

3.4.6 Surge suppression

When contactor coils are de-energized, overvoltage occurs (inductive load). Voltage peaks of up to 4 kV with a rate of rise in voltage of 1 kV/ms can result (showering arcs).
The consequences of this are:

- Heavy contact erosion and thus premature wearing of the contacts that switch the coil
- Unwanted signals can occur that may cause false signals in electronic controllers.

All contactor coils, therefore, should be damped against switching overvoltages, particularly when working with electronic controllers.

Oscillograms

The following oscillograms illustrate the behavior at disconnection of contactor coils without and with overvoltage damping:

Coils without surge suppression

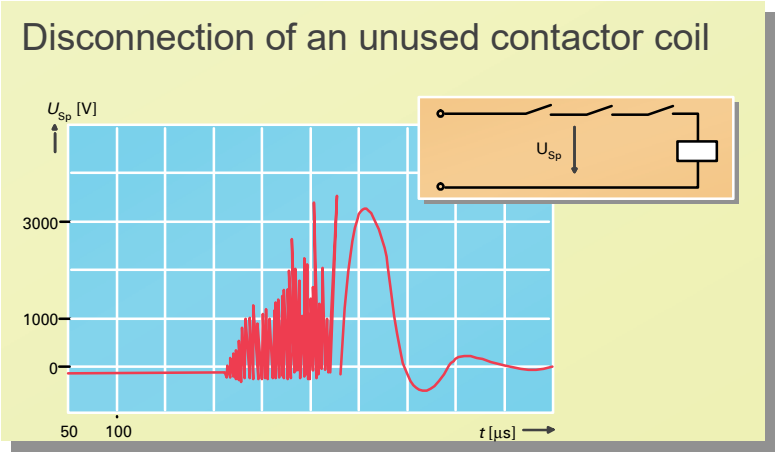

Fig. 3-52: Disconnecting contactor coil without suppression

Oscillogram of a de-energized coil of an auxiliary contactor. When suppression is not used:
Showering arcs can be clearly seen (voltage peaks of up to approximately 4 kV). After de-energization has been started, showering arcs occur for approximately 250 µs, and after that the oscillation is only damped.

Varistor

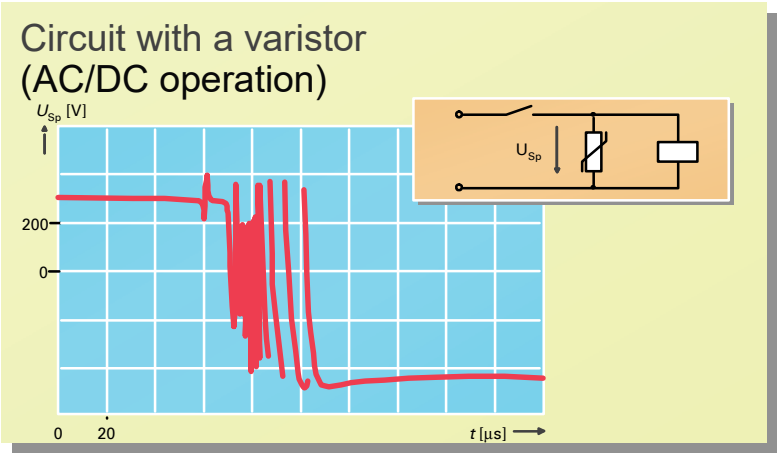

Fig. 3-53: Circuit with a varistor (AC/DC operation)

This is what happens when a coil is de-energized that is connected to a varistor (voltage-dependent resistor):
Voltage peaks still occur. They are cut off at approximately 400 V and have a shorter overall duration (approximately 50 µs).
(Note: The oscillogram is cut off, and the voltage is reduced to zero after approximately 3 ms.)
A varistor is suitable for AC and DC operation.
The opening time of the contactor is extended by approximately 2 to 5 ms.

RC-Element

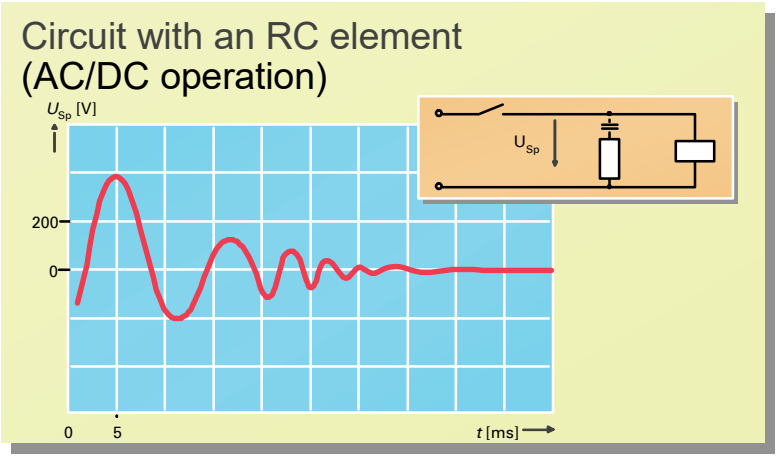

Fig. 3-54: Circuit with an RC element (AC/DC operation)

This is what happens when a coil is de-energized that is connected to an RC element:
The amplitude and rate of rise of the switching overvoltage are reduced by the capacitor. Showering arcs no longer occur. The voltage swings briefly to 400 V and then slowly drops down. This represents ideal damping.
Disadvantage: The component is larger and generally more expensive.
RC elements are suitable for AC and DC operation.
Only a minimal opening time occurs (under 1 ms).

Diode

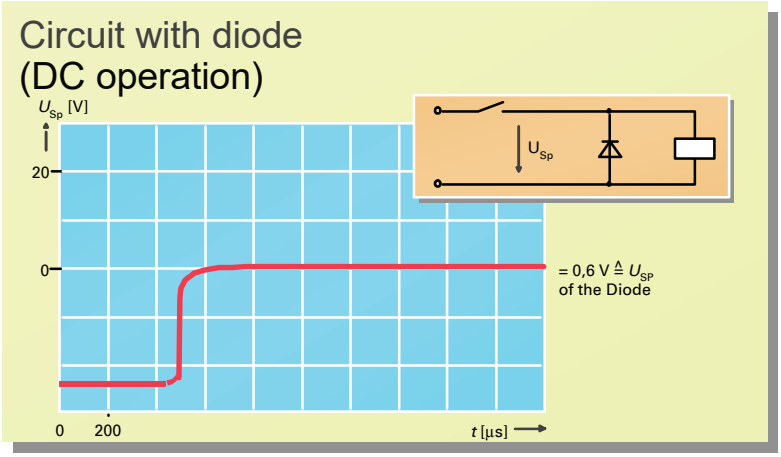

Fig. 3-55: Circuit with a diode (DC operation)

This is what happens when a coil is de-energized that is connected to a diode:
Advantages: No overvoltage occurs during de-energization. The diode block becomes effective at 0.6 V.
Disadvantage: The diode can only be used for DC operation.
The opening time of the contactor is considerably increased and amounts to 6 to 9 times the normal opening time.
This increased break time can be used, if necessary, for control purposes, such as for bridging brief interruptions in voltage.

Zener diodes (diode combinations) are available for shorter opening times. The opening time then amounts to 2 to 6 times the normal opening time.

Surge suppressors

The following surge suppressors are available for the 3RT1 contactors:

Surge suppressor	**With LED**	**Without LED**		
	for S00	**for S00**	**for S0**	**for S2, S3**
Suppression diode	x	x	—	—
Diode combination: suppression diode and Zener diode	—	x	x	x
Varistor	x	x	x	x
RC element	—	x	x	x

Table 3-31: Surge suppressor

Selection aid

The following table gives you a comparison of the effects of the different surge suppressors:

Surge suppressor	Suitable for control supply voltage	Overvoltage is limited	Effect
Suppression diode/ freewheeling diode	DC	0.6 V	• Opening time is considerably greater (6 to 10 times) • A two-stage drop[1)] cannot be ruled out in the case of contactors as of frame size S0
Diode combination: suppression diode Zener diode	DC	To Zener voltage	• Opening time is greater (2 to 6 times) • A 2-stage drop no longer occurs
Varistor	AC/DC	To varistor voltage (current-dependent)	• Opening time is only slightly greater (2 to 5 ms)
RC element	AC/DC	Corresponds to the dimensioning	• Opening time remains unchanged • Rate of rise in voltage is damped

Table 3-32: How surge suppressors work

1) The rate of drop is reduced once or twice to zero for a few ms:
- A safe drop is always ensured in the case of switching without current.
- The contact pieces are subjected to a greater thermal load when switching with current. When switching at the upper current limit, this can result in overload.

Installation

Frame size S00

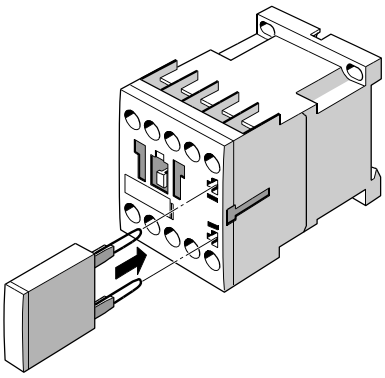

The surge suppressor is attached on the front of the contactors. There is space next to the attached auxiliary switch block. The direction of attachment is defined by a code.

Frame size S0 to S3

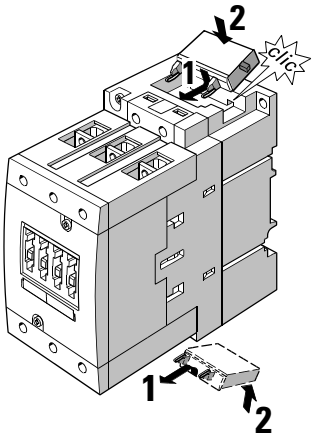

Varistors, RC elements, and diode combinations can either be inserted and snapped on from above or below directly onto the coil terminals.

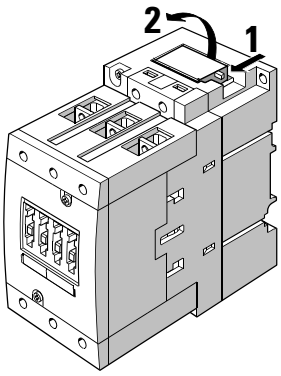

To remove them, press the varistors, RC elements, and diode combinations forwards, and remove them from the recess.

Fig. 3-56: Surge suppressors, installation

Installation instructions for frame sizes S0 to S3

Important
The 3RT1926-1E.00 diode combination is inserted from above. The direction of attachment is defined by a code.
Alternatively, the 3RT19 26-1T.00 diode combination can be inserted from below. The direction of attachment is not coded, but the terminals are marked with "+" and "-" so that the direction is clear.

3.4.7 Other accessories

3.4.7.1 LED module for indicating contactor control (3RT19 26-1QT00)

Description

The LED module can be connected to the coil terminals of the contactors of frame sizes S0 to S3. It indicates the status of the contactors by means of yellow LEDs.

Mode of operation

The LED module can be used for AC/DC voltages of 24 V to 240 V.
The LEDs are connected bidirectionally to protect against polarity reversal. Both LEDs light up in AC control, and one lights up in DC control, depending on the polarity.

Connection

The LED module is connected to the A1 and A2 coil terminals of the contactor.

Installation

The LED module is snapped onto the front in the openings intended for the inscription plate.

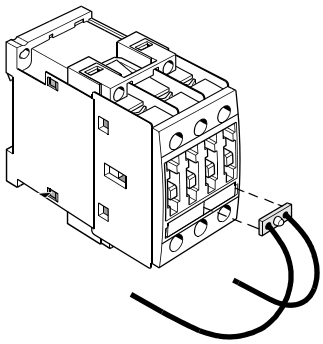

Fig. 3-57: LED module

3.4.7.2 Auxiliary connecting lead terminal, 3-pole for frame size S3 (3RT19 46-4F)

Using the 3-pole auxiliary lead terminal, auxiliary and control cables can be connected to the main cable terminals.

Conductor cross-sections of auxiliary connecting leads that can be connected:

Screw-type terminals (1 or 2 conductors can be connected)		
Single-core	mm^2	2 x (0.5 to 1.5); 2 x (0.75 to 2.5) in acc. with IEC 60 947; Max. 2 x (0.75 to 4)
Finely stranded with wire end ferrule	mm^2	2 x (0.5 to 1.5); 2 x (0.75 to 2.5)
AWG cables, single- or multi-core	AWG	2 x (20 to 16); 2 x (18 to 4); 1 x 12
Terminal screws		M3
Tightening torque	Nm	0.8 to 1.2 (7 to 10.3 lb.in)

Table 3-33: Conductor cross-sections of 3-pole auxiliary connecting lead terminals (for frame size S3)

3.4.7.3 EMC interference suppression module (3RT19 16-1P.)

In the case of motors or various inductive loads, back-e.m.f (electromotive force) is produced when disconnected. This can produce voltage peaks of up to 4000 V with a frequency range of 1 kHz to 10 MHz and a rate of voltage variation of 0.1 to 20 V/ns.
Capacitive coupling to various analog and digital signals makes suppression necessary in the load circuit.

Description

The connection of the main conducting path to the EMC suppression module reduces the contact sparking that is responsible for contact erosion and many of the disturbances, which in turn supports an EMC-compatible configuration.

Mode of operation

The EMC suppression module reduces through 3 phases the radio-frequency parts and the voltage peaks. The advantages of this are as follows:
- Longer service life of the contact pieces
- Higher operational reliability and high system availability

A fine grading within the performance class is not required because smaller motors have greater inductance due to their construction, and one EMC suppression module is thus sufficient for all non-stabilized drives up to 5.5 kW.

Variants

Two electrical variants are available:
- RC circuit
- Varistor switching

Circuit diagrams

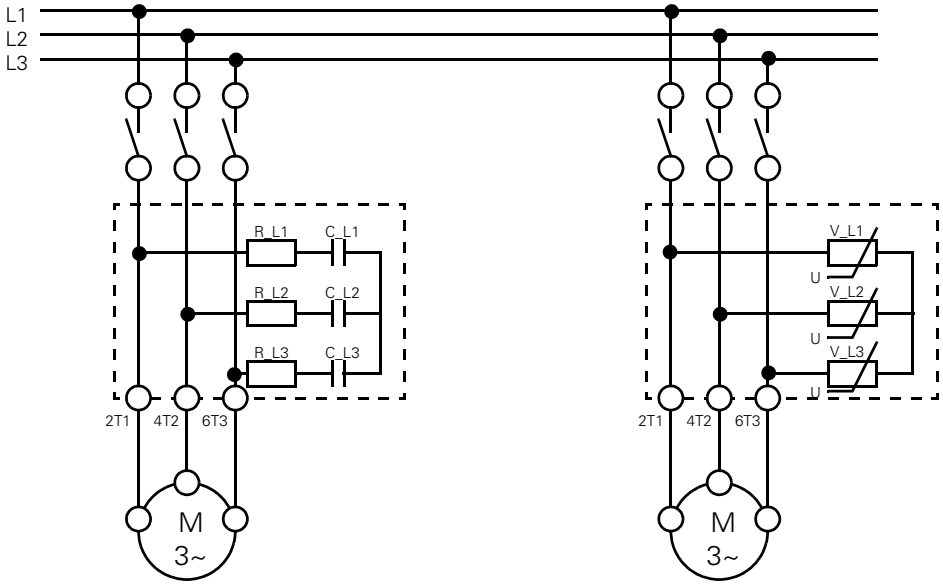

Fig. 3-58: Circuit diagrams

Installation

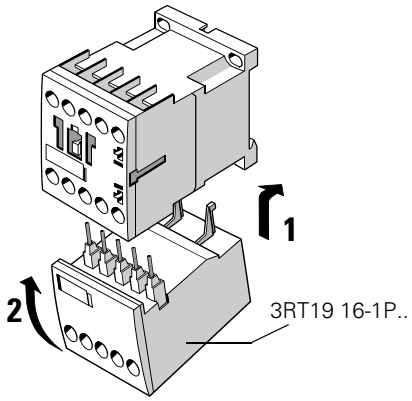

Fig. 3-59: EMC suppression module

The EMC suppression module is attached to the underside of the contactor. To do this, hook the EMC suppression module with both hooks onto the contactor, and push it upward until the connection pins of the EMC module are firmly in place in the terminal openings of the contactor.

RC circuit

The RC circuit is suitable:
- For reducing the rate of rise
- In RF damping

Effective suppression can be achieved for a wide range of applications.

Varistor circuit

A varistor circuit can absorb a high level of energy and can be used for frequencies from 10 to 400 Hz (stabilized drives). There is no limit below the buckling stress.

3.4.7.4 Soldering pin adapter for frame size S00 (3RT19 16-4KA.)

Description

The standard contactors of frame size S00 in the SIRIUS range can be soldered onto printed circuit boards by means of the soldering pin adapter. Soldering pin connection is possible:
- For contactors with an integrated auxiliary contact
- For contactors with an attached 4-pole auxiliary switch block
- For the reversing wiring of the S00 contactors. This involves carrying out the reversing wiring before soldering it on the printed circuit board

Mounting main contacts

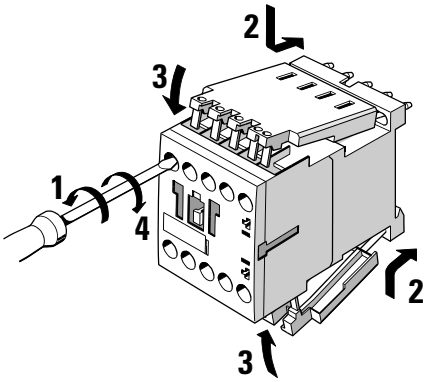

Fig. 3-60: Soldering pin connection, mounting

The soldering pin connectors are inserted above and below in the screw-type terminals of the contactors.

Mounting on 4-pole auxiliary switch block

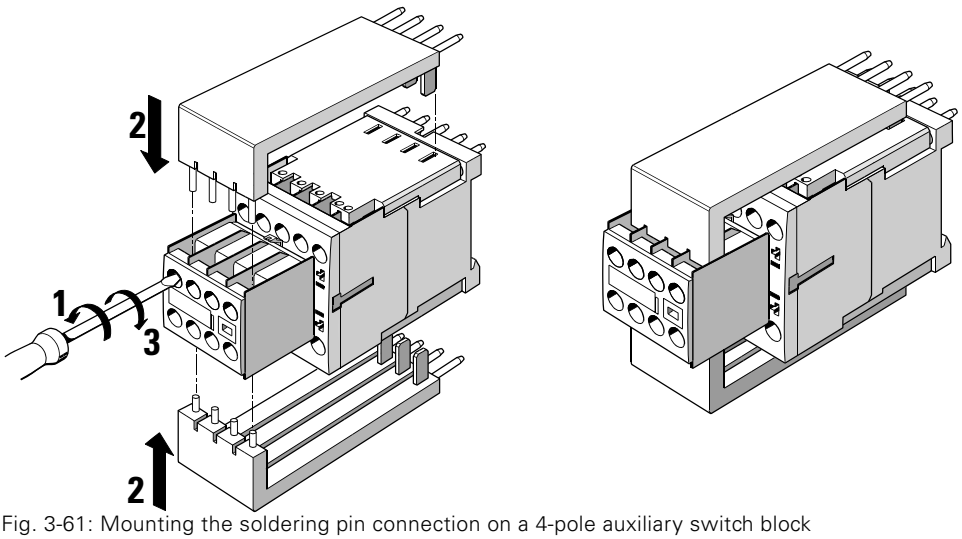

Fig. 3-61: Mounting the soldering pin connection on a 4-pole auxiliary switch block

Removing the spring

If necessary, the spring for attachment to the rail can be removed before the soldering pin connection is mounted.

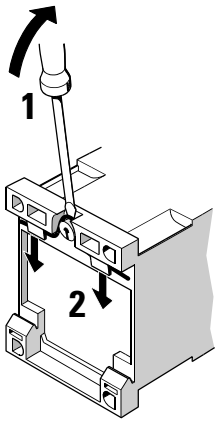

Fig. 3-62: Removing the spring from the soldering pin connection

3.4.7.5 Paralleling links (3RT19 .6-4B.31)

If the current paths of a multiple pole switching device are connected in parallel, then the total current is spread over the individual poles in accordance to their ohmic resistance and their mutual inductive interference. The ohmic resistance is mainly made up of the contact resistance of the contacts, whose value can change with erosion and oxidation. Therefore there is neither a symmetrical nor stabile distribution of current: individual current paths can become overloaded and the overload trip may operate prematurely causing nuisance tripping.

Continuous loading when connected in parallel

As long as there aren't any other details in the catalog data, then the following applies for continuous loading when connected in parallel:

- When three current paths are connected in parallel then the continuous current can be 2.5 times of a single current path and 1.8 times the continuous current with two current paths connected in parallel. It should be noted that the making and breaking are not increased, because the contacts don't open and close at the same time and therefore the contacts of an individual current path must be able to make or break the entire current
- The wiring arrangement should be such that every current path has the same cable length.
- An eventual short-circuit current would be divided with relationship to the resistance of the current paths.

Attention: Thereby, the tripping current of an instantaneous electromagnetic short-circuit trip may not be reached.

Making/breaking capacity

The magnitude of making and breaking capacities of contactors, related to load currents when connecting two/three poles in parallel are shown in the table below:

	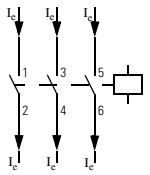 3-pole switching	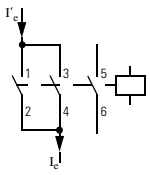 2 poles in parallel	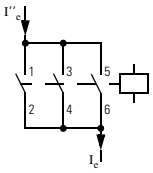 3 poles in parallel	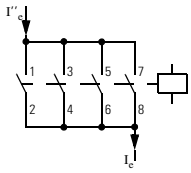 4 poles in parallel
Making capacity	12 x I_e (utilization category AC-4)	$\frac{12 \cdot I'e}{1,8} = 6,67 \cdot I'e$	$\frac{12 \cdot I''e}{2,5} = 4,8 \cdot I''e$	$\frac{12 \cdot I''e}{3,1} = 3,9 \cdot I''e$
Breaking capacity	10 x I_e (utilization category AC-4)	$\frac{10 \cdot I'e}{1,8} = 5,55 \cdot I'e$	$\frac{10 \cdot I''e}{2,5} = 4,0 \cdot I''e$	$\frac{10 \cdot I''e}{3,1} = 3,2 \cdot I''e$

Table 3-34: Parallel connection: making/breaking capacities

Designs

The following designs of paralleling links are available:

Frame sizes	Design
S00 to S3	3-pole, without connection terminal (wye jumper)[2)]
S00 to S3	3-pole, with connection terminal
S00	4-pole, with connection terminal

Table 3-35: Paralleling links: designs

[2)] Accessory for wye-delta combinations

Installation

The paralleling links each be shortened a pole.

3.4.7.6 Sealing cover (3RT19 .6-4MA10)

With the use of contactors and control relays in safety related applications, it must to be made certain that the manual activation of the contactor isn't possible.
For applications of this kind there is a sealing cover available as an accessory that prevents unintentional manual activation. It is a see-through moulded plastic cap with a clip that makes sealing the cover possible.

- Frame size S00: **3RT19 16-4MA10**

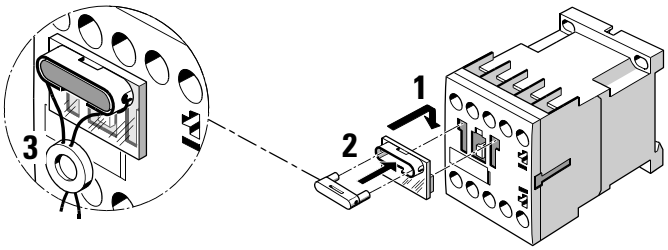

Fig. 3-63: Contactor frame size S00 with sealable cover

- Frame sizes S0 to S3: **3RT19 26-4MA10**

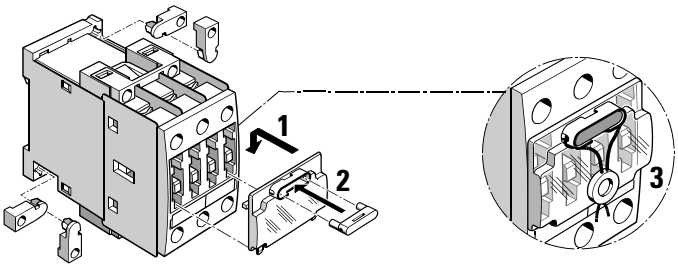

Fig. 3-64: Contactor frame sizes S0 to S3 with sealable cover

3.4.7.7 Terminal covers for frame sizes S2 to S3

To increase safety there are terminal covers available for contactors with frame sizes S2 to S3:

Design	Function	required number	Frame sizes
Cover for box terminals **3RT19.6-4EA2**	provides additional protection against shock	2 covers each are needed per contactor (for the main connections on top and bottom)	S2 to S3
Terminal cover for ring-tongue and busbar connection **3RT19.6-4EA1**	to keep the clearance between phases from determined connection cross-sections, provides protection against shock		S3

Table 3-36: Covers

Installation The following graphics show how to install the covers:

Drawing	Procedure	Frame size
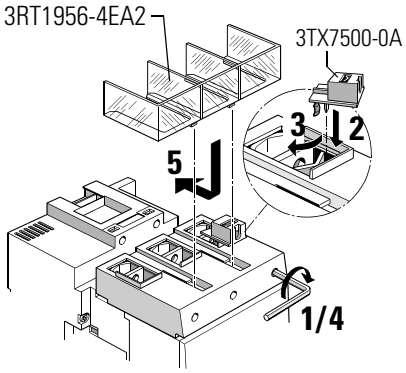	**3RT19.6-4EA2** The terminal covers for the box terminals are pushed into the guides on the box terminals block then slid toward the back until it locks into place.	S2 to S3
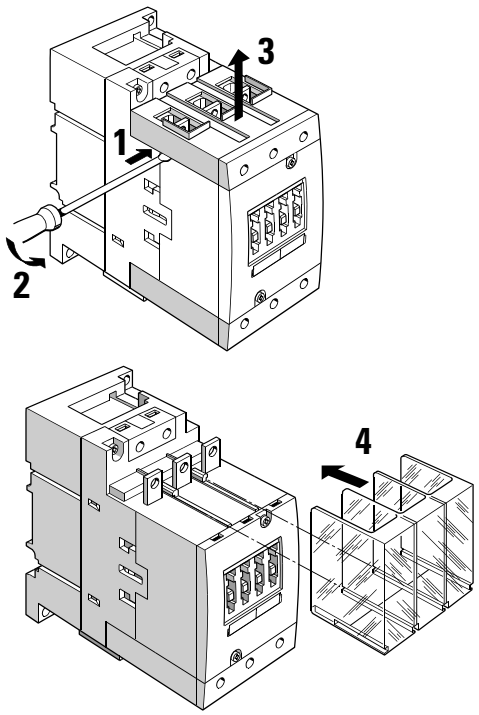	**3RT19.6-4EA1** To mount the terminal covers for ring-tongue and busbar connection first remove the box terminals block (only with frame size S3), and slide the cover on the guide rails.	S3

Fig. 3-65: Terminal covers

3.5 Mounting and connection

3.5.1 Mounting

Note

Note the following during installation:
- If foreign bodies, such as wood shavings, can get into the device, the contactors must be covered during installation.
- If there is a danger that dirt or dust could be present, or if there is a corrosive atmosphere, the contactors must be installed in a housing.
- Dust deposits must be vacuum cleaned.

Mounting options

The mounting options for the contactors are uniform.

Frame size	Installation	Removal
S00 to S3	Screw mounting	Removed with a screwdriver
S00, S0	Snapped onto a 35 mm rail (in acc. with EN 50 022)	Removed without a tool
S2, S3	Snapped onto a 35 mm rail (in acc. with EN 50 022)	The snap-on spring can be opened with a screwdriver
S3	Snapped onto a 75 mm rail	

Table 3-37: Mounting

Panel mounting

The following graphic shows panel (screw) mounting:

Frame sizes S00 and S0	
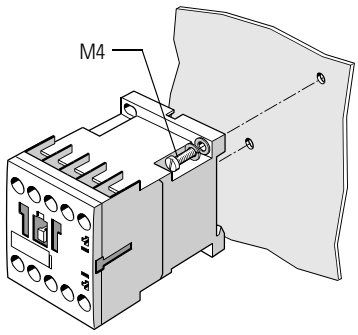	The 3RT1 contactors can be screwed onto a flat surface. • With 2 M4 screws, diagonal • Maximum tightening torque 2 Nm • Washers and spring lock washers must always be used • The distance to grounded parts at the side must be more than 6 mm
Frame sizes S0	
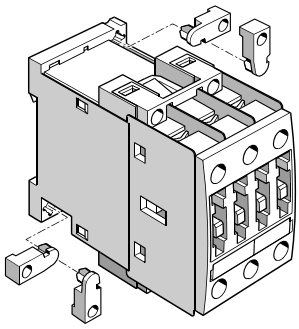	In order to make panel mounting easier (for example vertical accessability with the use of insulated screwdriver) for the frame size S0 contactors, the screw adapter **3RT1926-4P** can be used.

Fig. 3-66: Panel (screw) mounting

DIN rail mounting

DIN rail mounting is possible:
- Frame size S00 to S3: on 35-mm DIN rail
- Frame size S3: on 75-mm DIN rail. The height of the DIN rail must be at least 15 mm.

The following graphic shows DIN rail mounting:

Frame sizes S00 and S0	
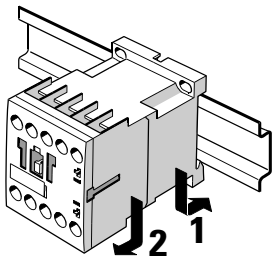	Place the device on the upper edge of the rail, and press it downward until it snaps onto the lower edge of the rail. Push the device downward to release the tension of the mounting spring, and remove the device by tilting it.
Frame sizes S2 and S3	
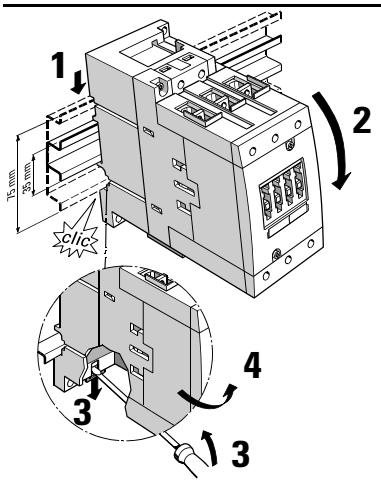	Place the device on the upper edge of the rail, and press it downward toward the rail until it snaps onto the lower edge of the rail. Using a screwdriver, push the lug on the lower rear side of the device downward to release the tension of the mounting spring, and remove the device by tilting it.

Fig. 3-67: Snap-on attachment

Mounting position

The contactors are designed for use on vertical surfaces. The following installation positions are permissible for AC and DC operation:
Frame size S00 to S3:

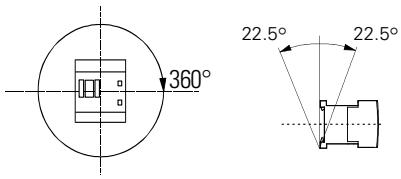

Contactor alone or with overload relay 3RB10

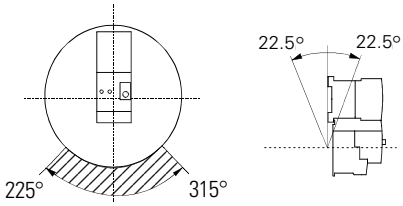

with overload relay 3RU1

Fig. 3-68: Installation positions (frame sizes S00 to S3)

Installation on horizontal surfaces

The following table provides a guide to installation on a horzontal surface:

Size	AC/DC	Output power	Measure
S00 coupler 3RT10 1.	DC	3 to 5.5 kW	Without restriction
S00 coupler 3RH11	DC	I_e/AC-15 6 A/230 V	With 2 NO + 2 NC contacts: stronger springs, otherwise no restriction
S00 3RT10 1.	DC	3 to 5.5 kW	Without restriction
S00 3RH11	DC	I_e/AC-15 6 A/230 V	Without restriction
S00	AC	3 to 5.5 kW/ and I_e/AC-15 6 A/230 V	Special variant
S0 coupler	DC	5.5 to 11 kW	Special variant
S0	DC	4 to 11 kW	Special variant
	AC	4 to 11 kW	Without restriction
S2	AC	15 to 22 kW	Special variant
	DC	15 to 22 kW	Installation on horizontal surface not possible!
S3	AC	30 to 45 kW	Special variant
	DC	30 to 45 kW	Installation on horizontal surface not possible!

Table 3-38: Guide to installation on a horizontal surface

Motor and auxiliary contacts (including the contactor relay variants) are included in frame size S00.

Side-by-side installation

No derating is necessary up to an ambient temperature of 60 °C for all the contactors, even those in side-by-side installation.
In the case of contactors with an extended operating range (0.7 to 1.25 x U_S) that use a series resistor, side-by-side installation is permissible up to an ambient temperature of +70 °C.

3.5.2 Connection

The SIRIUS contactors are available with the following terminal types:
- Frame sizes S00 to S3: screw-type terminals
- Contactors and auxiliary contactors of frame size S00: all the terminals are also available as Cage Clamp terminals
- Contactors of frame sizes S0 to S3: the auxiliary switches and coil connections are also available with Cage Clamp terminals.
- Accessories: screw-type and (for most of the range) Cage Clamp terminals
- The contactors of frame size S3 have removable box terminals for the main conductor terminals. This enables the connection of ring lugs or busbars.

Screw terminals

The devices with screw-type terminals have the following features:
- All the connections have captive screws.
- All the terminal points are delivered in the open position.
- The screwdriver guides allow screwdriving machines to be used.
- In frame size S00, all the terminal screws for the main and auxiliary circuits have a uniform screw size (cross-tip Pozidriv 2 screws) and therefore all require the same torque.
- In all the frame sizes (S00 to S3), the terminal screws are identical for the auxiliary conductor terminals (Pozidriv 2, common bit and uniform torque).

Cage Clamp terminals

In the variant with Cage Clamp terminals, the devices have the following features:
- Recommended if high shock or vibration can be expected at the installation location.
- The terminals are also suitable for two-conductor connections
- All the terminals are accessible from the front and are easily visible.
- A maximum of two conductors with a cross-section of 0.25 mm^2 up to a maximum 2.5 mm^2 can be used for each terminal point.

Cage Clamp terminals: Procedure

The following illustration shows you how to use the Cage Clamp terminals:

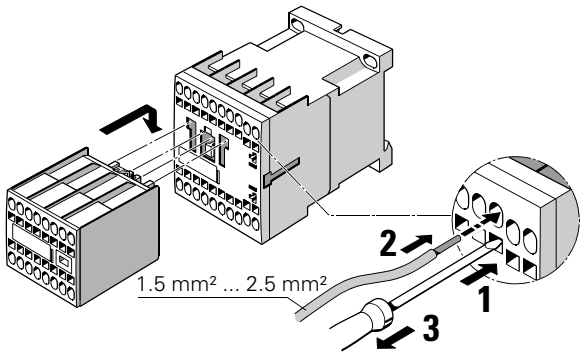

Insert the screwdriver straight into the opening up until the stop **(1)** to open the clamping unit. Insert the conductor in the oval terminal opening **(2)**, and remove the screwdriver **(3)**.

Fig. 3-69: Cage Clamp terminals

Insulation stop

With a conductor cross-section of ≤ 1 mm^2, an insulation stop (3RT19 16-4JA02) must be used to hold the conductor insulation securely. An insulation stop line consists of 5 pairs of connection terminals. The following illustration demonstrates insertion into the Cage Clamp infeeds.

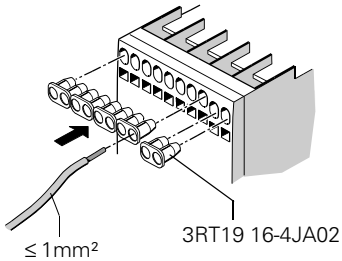

Fig. 3-70: Insulation stop with Cage Clamp terminals

Two-conductor connection

It is possible with all the main, auxiliary, and control cable connections to connect two conductor ends. They can also be used to connect untreated conductors with different cross-sections. Box terminals each with 2 terminal points are provided for the main conductor connection in contactors of frame sizes S2 and S3.
This connection method also promises problem-free looping and parallel connection without intermediate terminals.

Conductor cross-sections

Permissible conductor cross-sections for main and auxiliary connections:

Frame size S00

	Main and auxiliary conductors	
Ø 5 ... 6 mm / PZ2	0.8 to 1.2 Nm 7 to 10.3 lb·in	**Cage Clamp**
10	2 x (0.5 to1.5 mm²) 2 x (0.75 to 2.5 mm²)	2 x (0.25 to 2.5 mm²)
10	2 x (0.5 to1.5 mm²) 2 x (0.75 to 2.5 mm²)	2 x (0.25 to 1.5 mm²)
10	—	2 x (0.25 to 2.5 mm²)
AWG	2 x (18 to 14)	2 x (24 to 14)

Frame size S0

	Control conductor: A1/A2 Auxiliary conductor: NO/NC		Main conductor
	Screw-type terminal	**Cage Clamp terminal**	**L1 L2 L3 T1 T2 T3**
Ø 5 ... 6 mm / PZ2	0.8 to 1.2 Nm 7 to 10.3 lb·in	—	2 to 2.5 Nm 18 to 22 lb·in
10	2 x (0.5 to 1.5 mm²) 2 x (0.75 to 2.5 mm²)	2 x (0.25 to 2.5 mm²)	2 x (1 to 2.5 mm²) 2 x (2.5 to 6 mm²)
10	2 x (0.5 to 1.5 mm²) 2 x (0.75 to 2.5 mm²)	2 x (0.25 to 1.5 mm²)	2 x (1 to 2.5 mm²) 2 x (2.5 to 6 mm²)
10	—	2 x (0.25 to 2.5 mm²)	—
AWG	2 x (18 to 14)	2 x (24 to 14)	2 x (14 to 10)

Frame size S2

	Control conductor: A1/A2 Auxiliary conductor: NO/NC			Main conductor
	Screw-type terminal	**Cage Clamp terminal**		**L1 L2 L3 T1 T2 T3**
Ø 5...6 mm / PZ2	0.8 to 1.2 Nm 7 to 10.3 lb·in	—	Ø 5...6 mm / PZ2	3 to 4.5 Nm 27 to 40 lb·in
10	2 x (0.5 to 1.5 mm²) 2 x (0.75 to 2.5 mm²)	2 x (0.25 to 2.5 mm²)	13	2 x (0.75 to 16 mm²)
10	2 x (0.5 to 1.5 mm²) 2 x (0.75 to 2.5 mm²)	2 x (0.25 to 1.5 mm²)	13	2 x (0.75 to 16 mm²) 1 x (0.75 to 25 mm²)
10	—	2 x (0.25 to 2.5 mm²)	13	2 x (0.75 to 25 mm²) 1 x (0.75 to 35 mm²)
AWG	2 x (18 to 14)	2 x (24 to 14)	**AWG**	2 x (18 to 3) 1 x (18 to 2)

Frame size S3

	Control conductor: A1/A2 Auxiliary conductor: NO/NC			Main conductor
	Screw-type terminal	**Cage Clamp terminal**		**L1 L2 L3 T1 T2 T3**
∅ 5 ... 6 mm / PZ2	0.8 to 1.2 Nm 7 to 10.3 lb·in	—	min 22 4	4 to 6 Nm 35 to 53 lb·in
10	2 x (0.5 to 1.5 mm²) 2 x (0.75 to 2.5 mm²)	2 x (0.25 to 2.5 mm²)	17	2 x (2.5 to 16 mm²)
10	2 x (0.5 to 1.5 mm²) 2 x (0.75 to 2.5 mm²)	2 x (0.25 to 1.5 mm²)	17	2 x (2.5 to 35 mm²) 1 x (2.5 to 50 mm²)
10	—	—	17	2 x (10 to 50 mm²) 1 x (10 to 70 mm²)
AWG	2 x (18 to 14)	2 x (24 to 14)	**AWG**	2 x (10 to 1/0) 1 x (10 to 2/0)

3.5.3 Changing the magnetic coils

4 coil terminals

Contactors of frame sizes S0 to S3 have 4 coil terminals.
The advantages of this are as follows:

- Variable connection, depending on the amount of space and cable routing
- Easier wiring of feeders

The connection options are:

- From below when in fuseless configuration with circuit breakers/MSPs connected above the contactor.
- From above when contactors are used with an overload relay attached directly below it.
- Diagonal

Changing the magnetic coils

The magnetic coils of frame sizes S0 to S3 contactors can be replaced in accordance with the procedures shown below.

S0 - AC operation

The following illustration shows the replacement of the magnetic coil in frame size S0 in AC operation:

Drawing	Step	Procedure
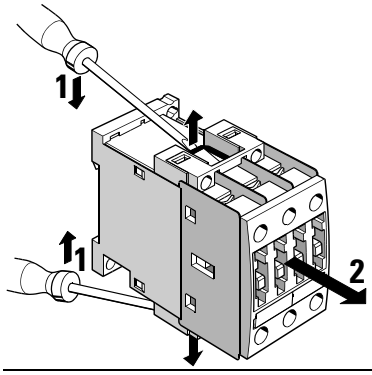	**1/2**	Use screwdrivers to lever up the release clips between the rear and front contactor halves and remove the front part of the contactor.
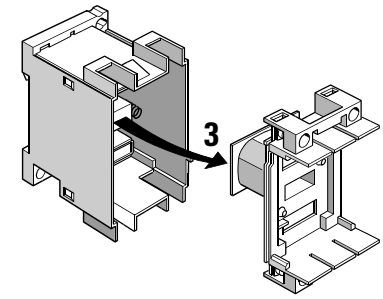	**3**	Remove the magnetic coil from the rear half of the contactor.
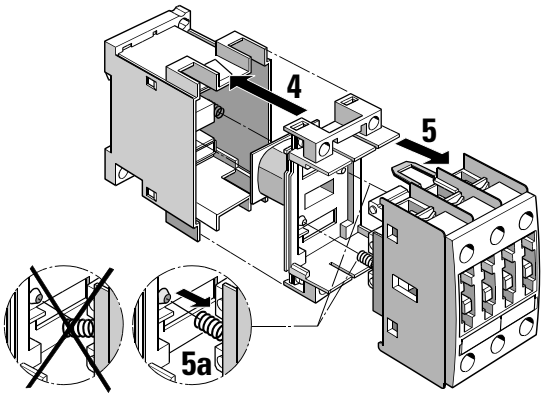	**4/5** **5a**	Push in the new magnetic coil, and put the front section of the contactor back on again. **Important:** Make sure that the springs between the magnetic coil and the front contactor half sit straight on the spring support pin.

Fig. 3-71: Replacing the magnetic coil (frame size S0/AC)

S2 - AC operation

Drawing	Step	Procedure
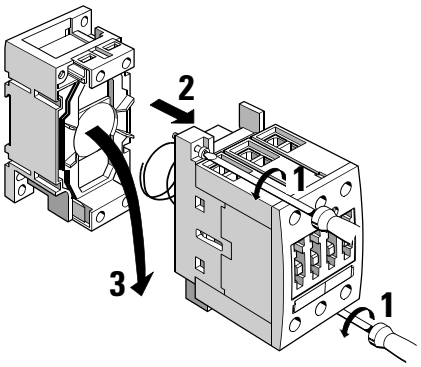	**1/2/3**	Loosen the 2 screws between the rear and front contactor halves, and remove the magnetic coil from the rear part of the contactor.
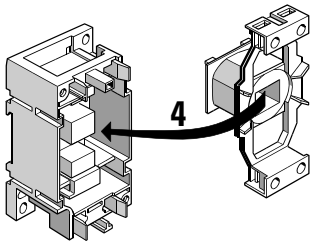	**4**	Insert the new magnetic coil.
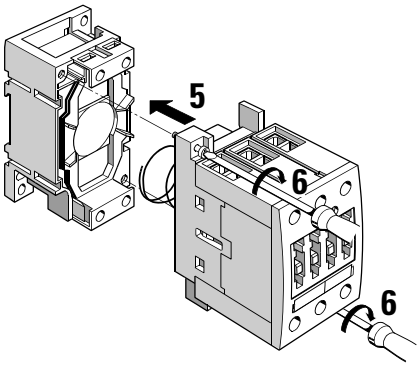	**5/6**	Replace the front half of the contactor, and tighten the 2 screws again.

Fig. 3-72: Replacing the magnetic coil (frame size S2/AC)

S2 - DC operation

Drawing	Step	Procedure
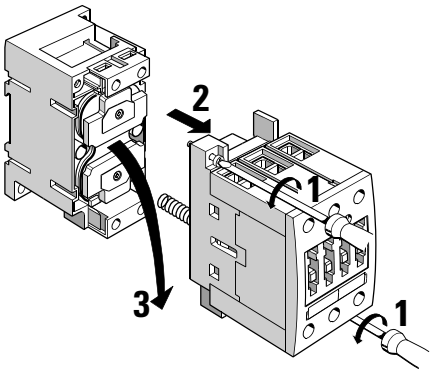	1 2 3	Loosen the 2 screws between the rear and front contactor halves. Loosen the two screws on the plates that attach the magnetic coil to the armature, and remove the magnetic coil from the rear half of the contactor.
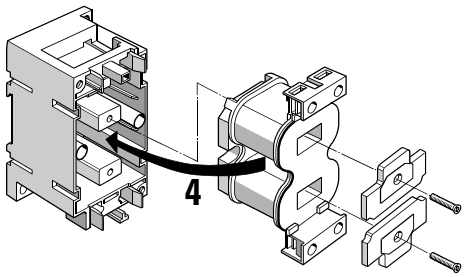	4	Insert the new magnetic coil, and screw on the two plates again with the two screws.
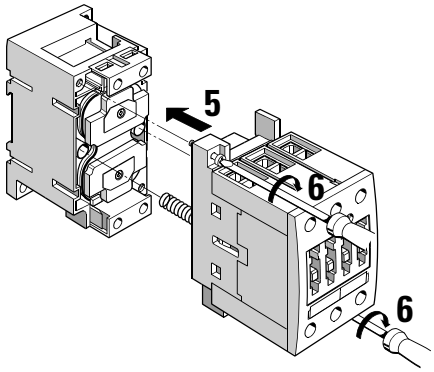	5 6	Replace the front half of the contactor, and tighten the 2 screws again. Make sure the springs are in their correct position.

Fig. 3-73: Replacing the magnetic coil (frame size S2/DC)

S3 - AC operation

Drawing	Step	Procedure
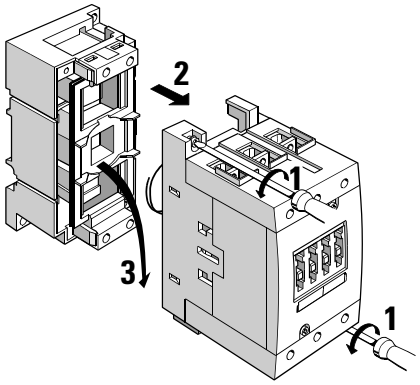	**1** **2** **3**	Loosen the 2 screws between the rear and front contactor halves, and remove the magnetic coil from the rear part of the contactor.
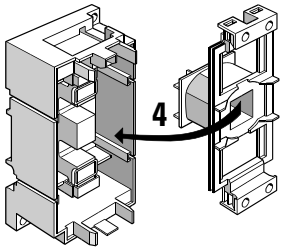	**4**	Insert the new magnetic coil.
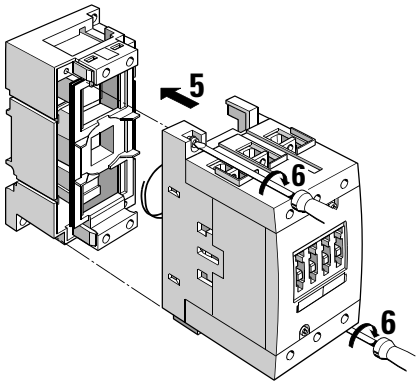	**5** **6**	Replace the front half of the contactor, and tighten the 2 screws again.

Fig. 3-74: Replacing the magnetic coil (frame size S3/AC)

S3 - DC operation

Drawing	Step	Procedure
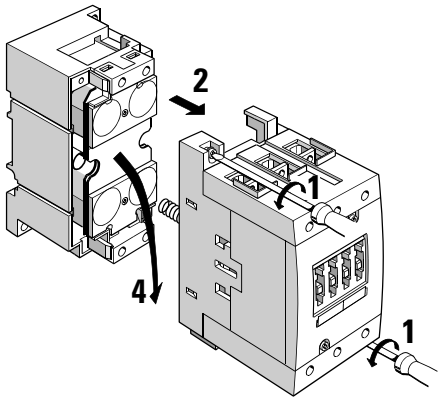	**1** **2** **3** **4**	Loosen the 2 screws between the rear and front contactor halves. Loosen the two screws on the plates that attach the magnetic coil on the armature, and remove the magnetic coil from the rear half of the contactor.
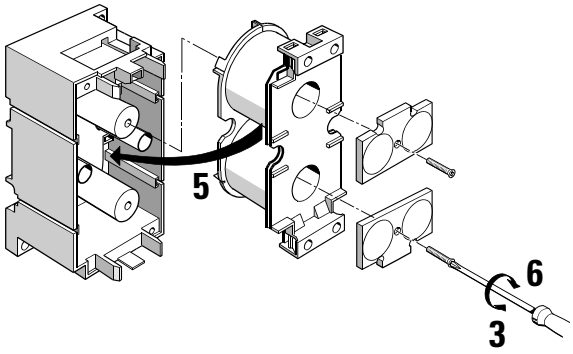	**5/6**	Insert the new magnetic coil, and screw on the two plates again with the two screws.
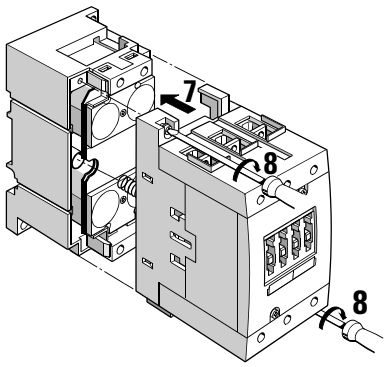	**7/8**	Replace the front half of the contactor, and tighten the 2 screws again. Make sure the springs are in their correct position!

Fig. 3-75: Replacing the magnetic coil (frame size S3/DC)

3.5.4 Changing the contact pieces

The contact pieces can be replaced in contactors of frame sizes S2 to S3. When they are replaced for the third time, the arcing chamber also has to be replaced.
3RT12 vacuum contactors can have the vacuum tubes replaced.

Frame size S2

Drawing	Step	Procedure
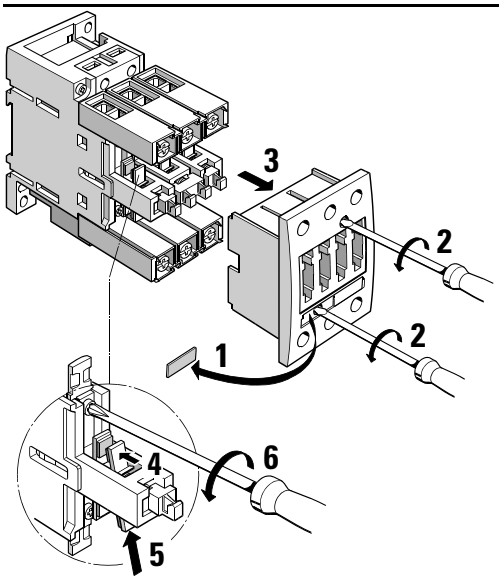	**1/2/3**	Remove the left identification label, loosen the 2 screws on the front plate of the contactor, and remove the arc chute.
	4/5	Remove the movable contact piece by gently tipping it upward and then pulling it out.
	6	Loosen the screws that attach the two stationary contact pieces.
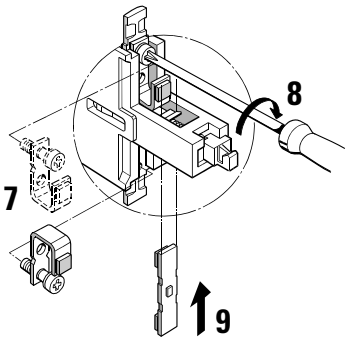	**7/8**	Remove the old contact pieces and screw on the new contact pieces.
	9	Push in a new movable contact piece.
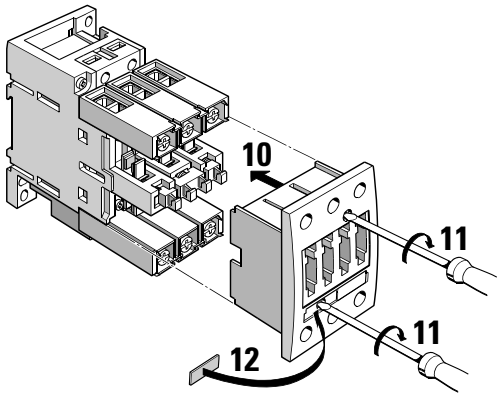	**10/11**	Replace the arc chute of the contactor and tighten the 2 screws on the front plate.
	12	Replace the identification label.

Fig. 3-76: Replacing the contact piece (frame size S2)

Frame size S3

Drawing	Step	Procedure
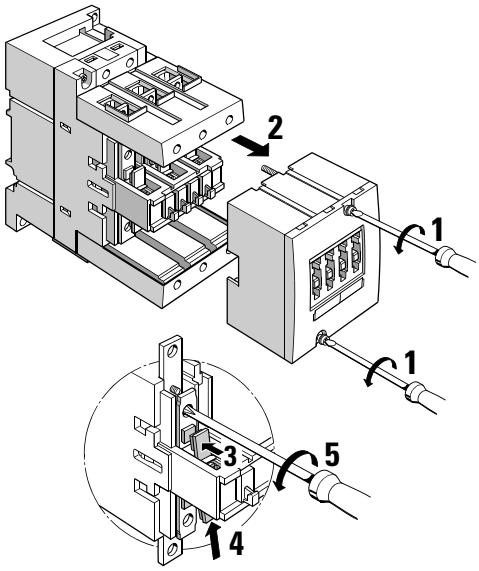	**1/2**	Loosen the 2 screws on the front plate of the contactor, and remove the arc chute.
	3/4	Remove the movable contact piece by gently tipping it upward and then pulling it out.
	5	Loosen the screws that attach the two stationary contact pieces.
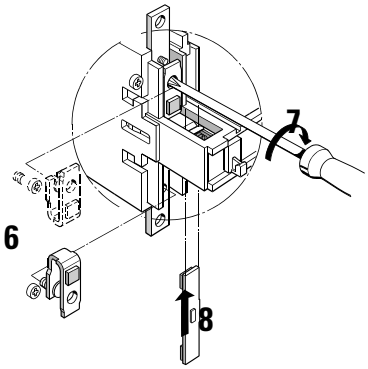	**6/7**	Remove the old contact pieces and screw on the new contact pieces.
	8	Push in a new movable contact piece.
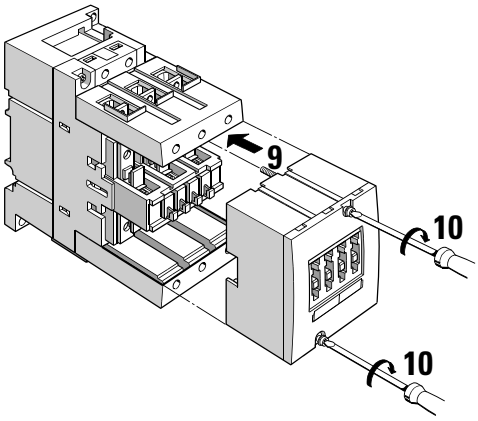	**9/10**	Replace the arc chute of the contactor, and tighten the 2 screws on the front plate.

Fig. 3-77: Replacing the contact piece (frame size S3)

Contact pieces

The following contact pieces can be used for the different rating classes:

Frame size S2

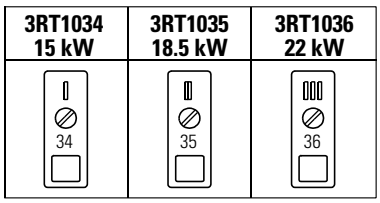

Frame size S3

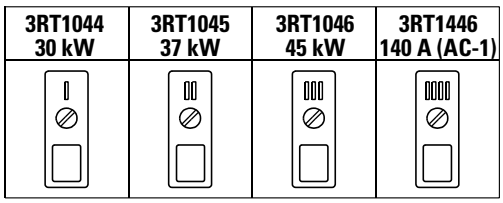

Fig. 3-78: Contact pieces

3.6 Dimensional drawings (dimensions in mm)

3RT1. contactors / 3RH11 control relays - 3-pole

Frame size S00, screw connection

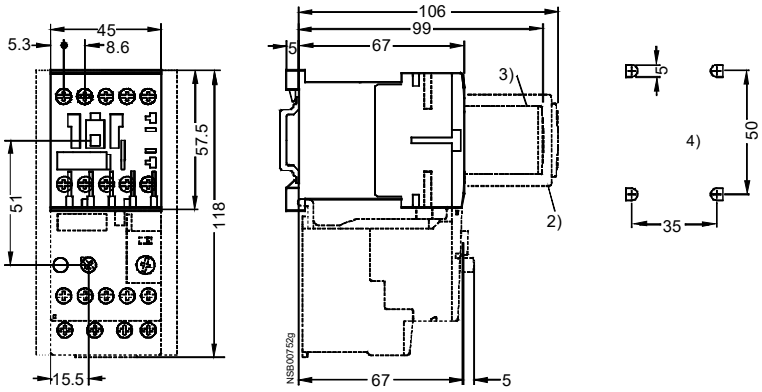

Fig. 3-79: 3RT1. 10 1/3RH11 contactors
Screw-type terminal with surge suppressor, auxiliary switch block and attached overload relay

Frame size S00, Cage Clamp connection

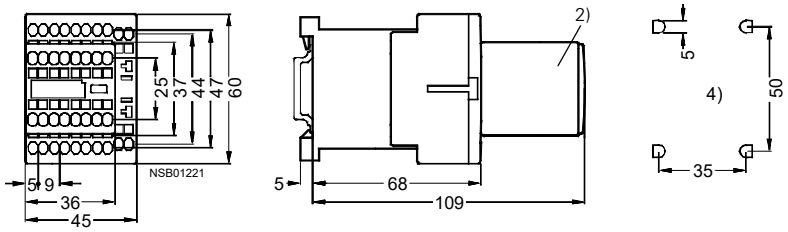

Fig. 3-80: 3RT10 1 contactors (Cage Clamp connection) with auxiliary contact block
2) Auxiliary switch block (also electronically optimized variant 3RH19 11-11N...)
3) Surge suppressor (also additional load module 3RT19 16-1GA00)
4) Drilling pattern
Distance to grounded parts at the side 6 mm

Frame size S0, screw connection

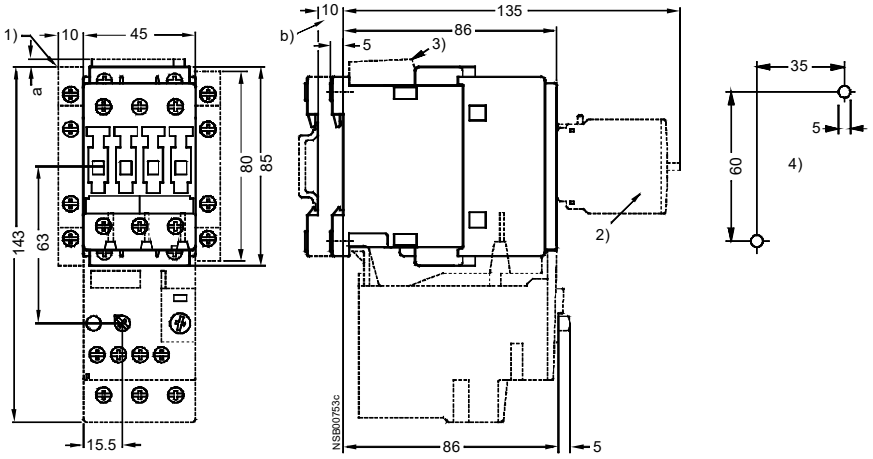

Fig. 3-81: 3RT10 2 contactors, 3RT10 2 coupling contactors with surge suppressor, auxiliary contact block and installed overload relay

a = 3 mm at < 240 V
a = 7 mm at > 240 V
b = DC 10 mm deeper than AC

1) Side-mount auxiliary contact
2) Front-mount auxiliary contact block. 1-, 2- and 4-pole (also electronically optimized design 3RH1921-.FE22)
3) Surge suppressor
4) Drilling pattern
Distance to grounded parts at the side 6 mm

Frame size S0, Cage Clamp connection

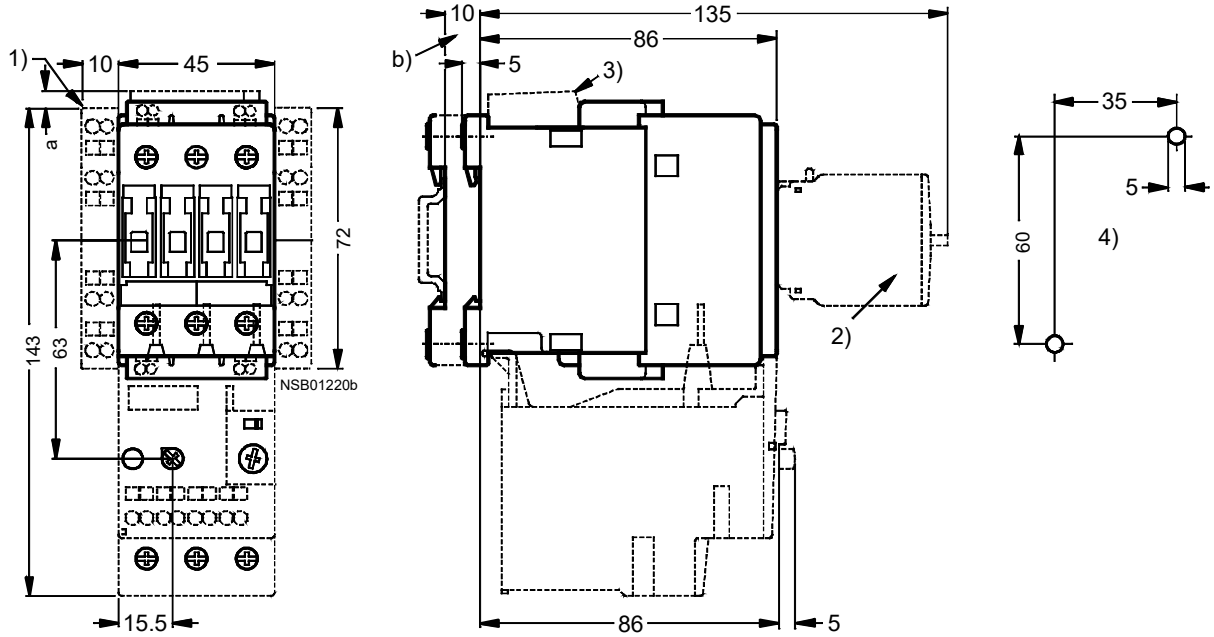

Fig. 3-82: 3RT10 2 contactors 3RT10 2 coupling contactors with surge suppressor, auxiliary contact block and installed overload relay (Cage Clamp connection)

a = 0 mm with Varistor < 240 V, diode combination
a = 3.5 mm with Varistor > 240 V
a = 17 mm with RC-element
b = DC 15 mm deeper as AC

1) Side-mount auxiliary contact
2) Front-mount auxiliary contact block (1-, 2- and 4-pole)
3) Surge suppressor
4) Drilling pattern
Distance to grounded parts at the side 6 mm

Frame size S2, screw connection

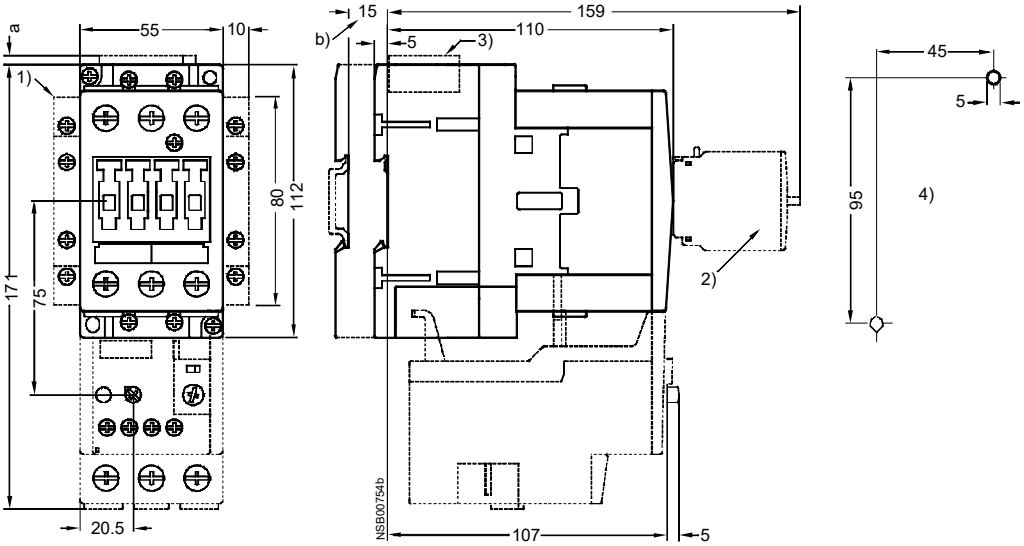

Fig. 3-83: 3RT10 3 contactors with surge suppressor, auxiliary contact block and installed overload relay

Frame size S2, Cage Clamp connection

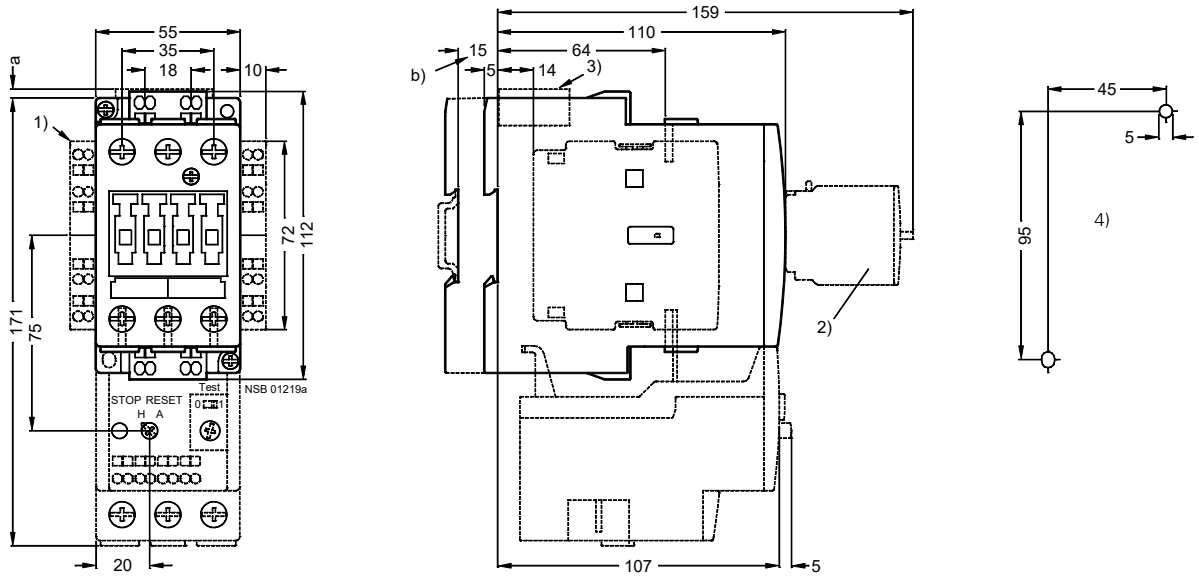

Fig. 3-84: 3RT10 3 contactors (Cage Clamp connection) with surge suppressor, auxiliary contact block and installed overload relay

a = 0 mm with Varistor < 240 V, diode combination
a = 3.5 mm with Varistor > 240 V
a = 17 mm with RC-element
b = DC 15 mm deeper as AC

1) Side-mount auxiliary contact
2) Front-mount auxiliary contact block (1-, 2- and 4-pole)
3) Surge suppressor
4) Drilling pattern
Distance to grounded parts at the side 6 mm

Frame size S3, screw connection

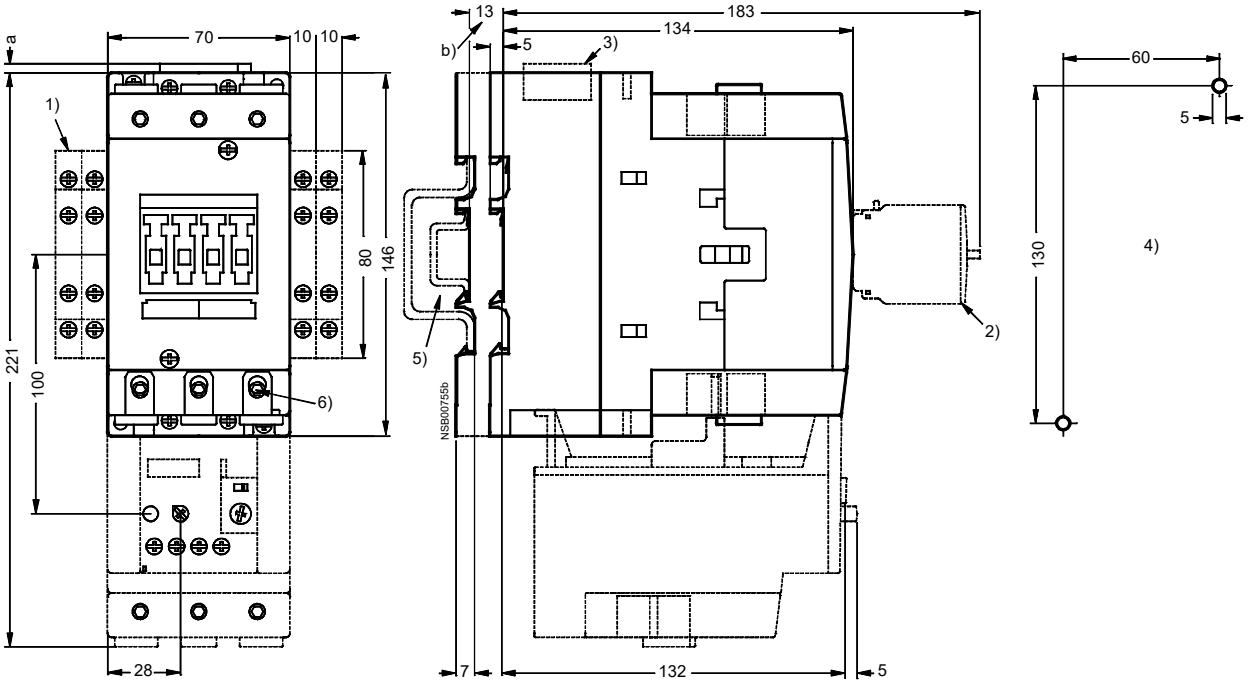

Fig. 3-85: 3RT10 4, 3RT14 46 contactors
with surge suppressor, auxiliary contact blocks and installed overload relay

Frame size S3, Cage Clamp connection

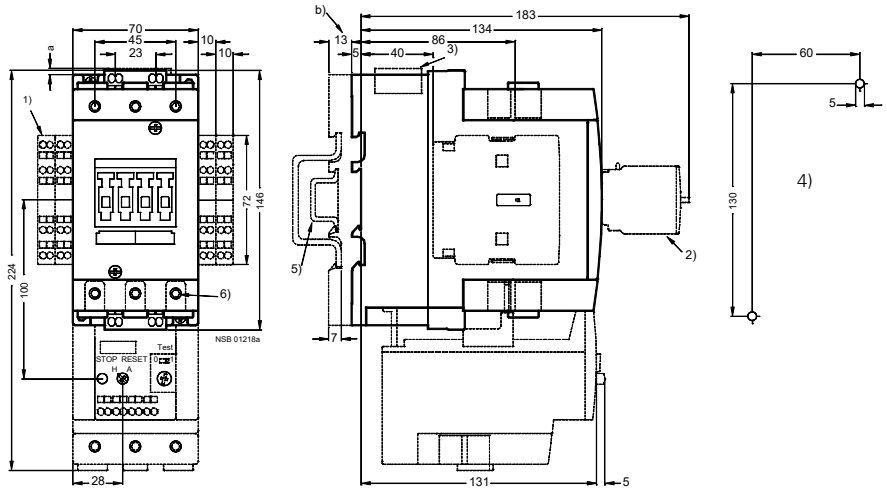

Fig. 3-86: 3RT10 4 contactors (Cage Clamp connection)
with surge suppressor, auxiliary contact blocks and installed overload relay

a = 0 mm with Varistor, diode combination and < 240 V
a = 3.5 mm with Varistor and > 240 V
a = 17 mm with RC-element
b = DC 13 mm deeper as AC

1) Side-mount auxiliary contact
2) Front-mount auxiliary contact block (1-, 2- and 4-pole)
3) Surge suppressor
4) Drilling pattern
5) Attachment to 35 mm DIN rail and 15 mm deep according to EN 50 022 or 75 mm DIN rail according to EN 50 023
6) 4 mm Allen screw
Distance to grounded parts at the side 6 mm

3RT10 coupling contactors

Frame size S00

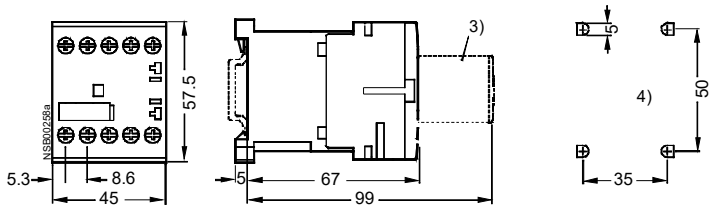

Fig. 3-87: 3RT10 1. with surge suppressor
Different dimensions for coupling contactors with Cage Clamp-connection: height 60 mm

3) Surge suppressor
4) Drilling pattern
3RT10 2. coupling contactor see illustration 3-81

3RT13 and 3RT15 contactors - 4-pole

Frame size S00

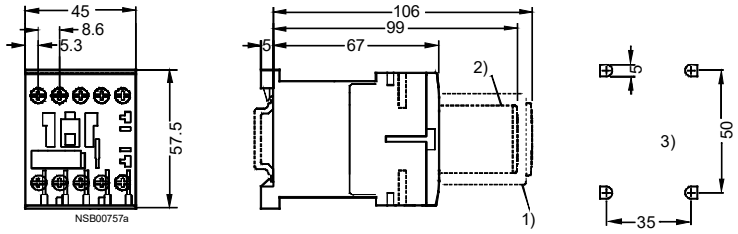

Fig. 3-88: 3RT13 1, 3RT15 1
Screw-type terminal with surge suppressor and auxiliary contact block
Different dimensions for contactors with Cage Clamp-terminals: height 60 mm, mounting depth with auxiliary contact block 110 mm

1) Auxiliary contact block (also electronically optimized design 3RH19 11-1N...)
2) Surge suppressor (also additional load module 3RT19 16-1GA00)
3) Drilling pattern
Distance to grounded parts at the side 6 mm

Frame size S0

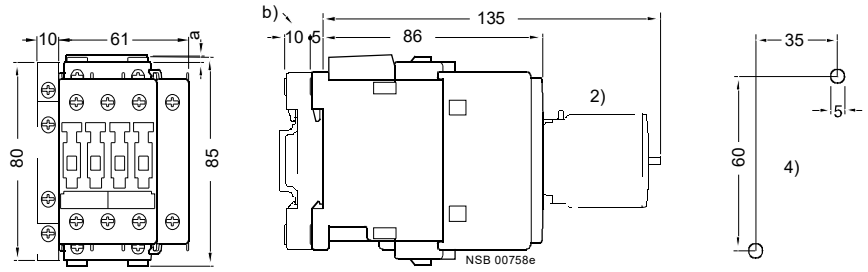

Fig. 3-89: 3RT13 2, 3RT15 2
with surge suppressor and auxiliary contact block

a = 3 mm with < 250 V and installation of surge suppressor
a = 7 mm with > 250 V and installation of surge suppressor
b = DC 10 mm deeper as AC

1) Side-mount auxiliary contact (left)
2) Front-mount auxiliary contact block (max. two 1-pole auxiliary contact blocks)
3) Surge suppressor
4) Drilling pattern
Distance to grounded parts at the side: 6 mm

Frame size S2

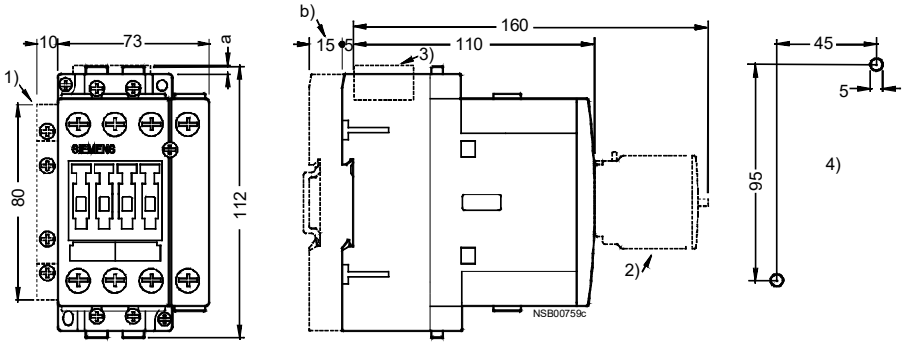

Fig. 3-90: 3RT13 3, 3RT15 3 with surge suppressor and auxiliary contact block

a = 0 mm with Varistor < 240 V
a = 3.5 mm with Varistor > 240 V
a = 17 mm with RC-element and diode combination
b = DC 15 mm deeper as AC

1) Side-mount auxiliary contact (right or left)
2) Front-mount auxiliary contact block (1-, 2- and 4-pole, also electronically optimized design 3RH19 21-1FE22)
3) Surge suppressor
4) Drilling pattern
5) Attachment to 35 mm DIN rail (15 mm deep) according to EN 50 022 or 75 mm DIN rail according to EN 50 023
6) 4 mm Allen screw
Distance to grounded parts at the side 6 mm

Frame size S3

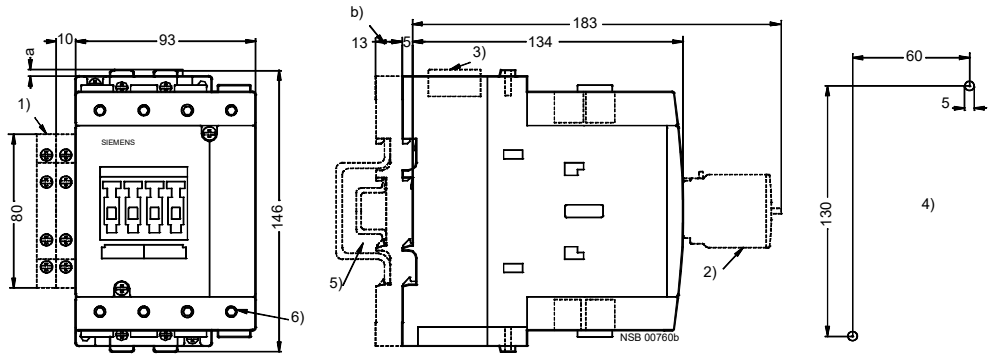

Fig. 3-91: 3RT13 4 with surge suppressor and auxiliary contact block

a = 0 mm with Varistor < 240 V
a = 3.5 mm with Varistor > 240 V
a = 17 mm with RC-element and diode combination
b = DC 13 mm deeper than AC

1) Side-mount auxiliary contact (right or left)
2) Front-mount auxiliary contact block (1-, 2- and 4-pole, also electronically optimized design 3RH19 21-1FE22)
3) Surge suppressor
4) Drilling pattern
5) Attachment to 35 mm DIN rails with 15 mm depth in acc. with EN 50 022 or 75 mm DIN rails in acc. with EN 50 023
6) 4 mm Allen screw
Distance to grounded parts at the side 6 mm

3RT16 capacitor-switching contactors

Frame size S00

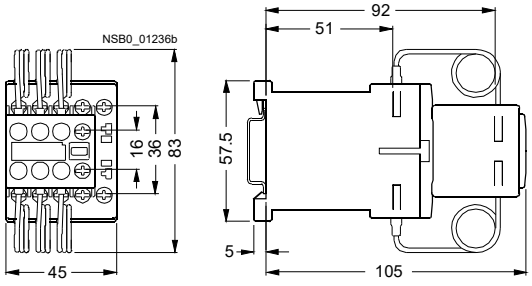

Fig. 3-92: 3RT16 17

Frame size S0

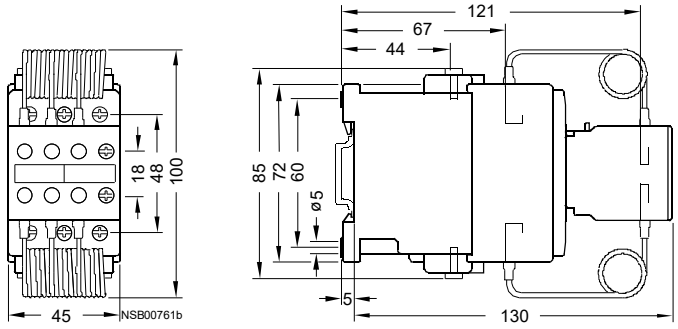

Fig. 3-93: 3RT16 27

Frame size S3

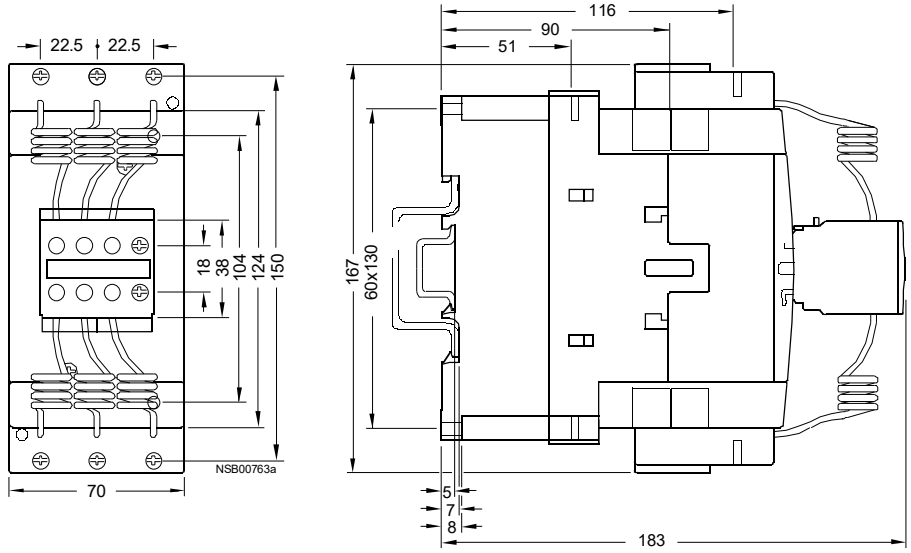

Fig. 3-94: 3RT16 47

3RT1/3RH11 contactors with an extended operating range

Frame size S00

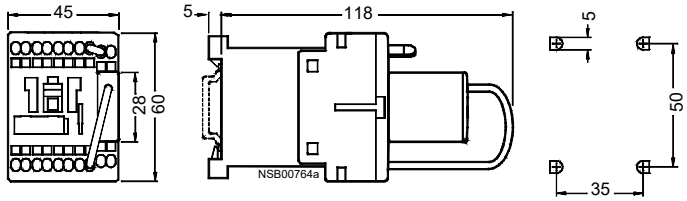

Fig. 3-95: 3RT10 17, 3RH 11

Frame size S0

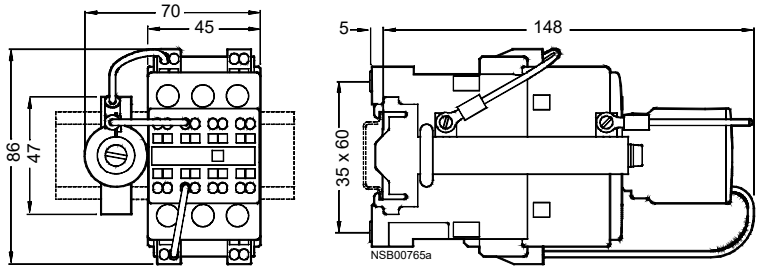

Fig. 3-96: 3RT10 2

Frame size S2

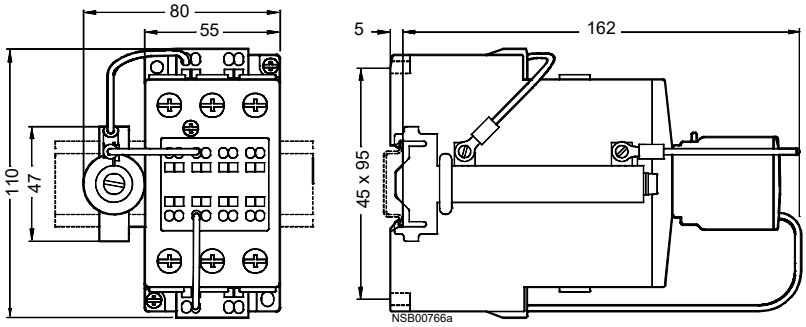

Fig. 3-97: 3RT10 3

Frame size S3

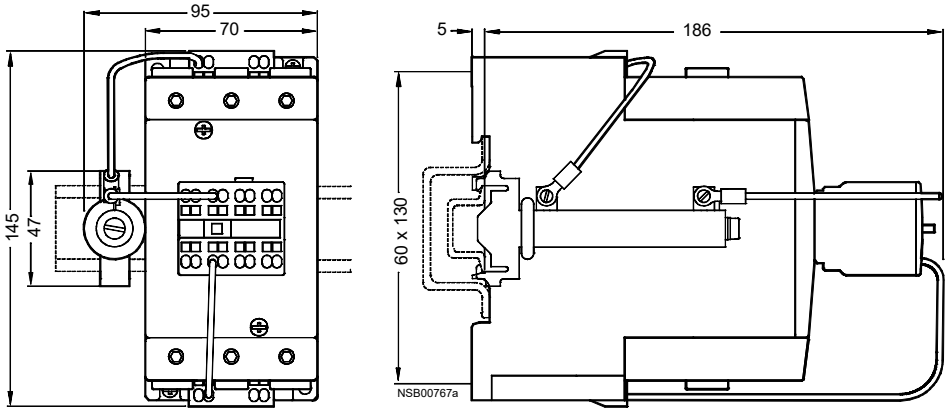

Fig. 3-98: 3RT10 4

3RT10 contactors with electronic control module (extended operating range 0.7 to 1.25 x U_S)

Frame sizeS0, Cage Clamp connection

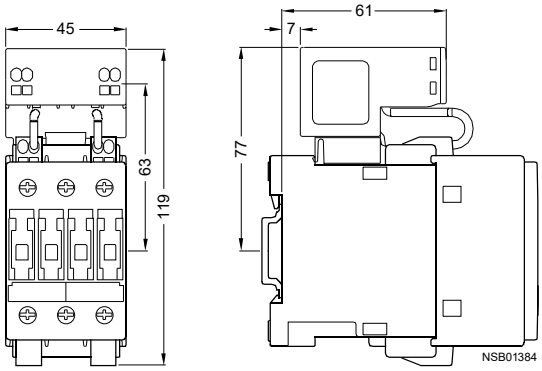

Fig. 3-99: 3RT10 2.-3X.40-0LA2

Frame size S0, screw connection

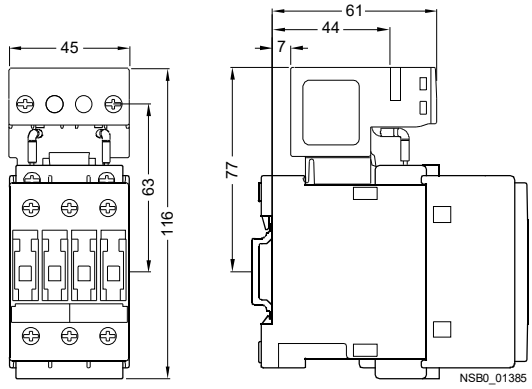

Fig. 3-100: 3RT10 2.-1X.40-0LA2

Frame size S2, Cage Clamp connection

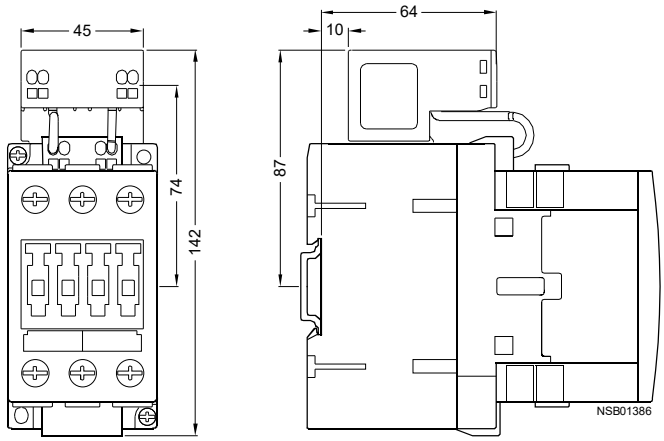

Fig. 3-101: 3RT10 3.-3X.40-0LA2

Frame size S2, screw connection

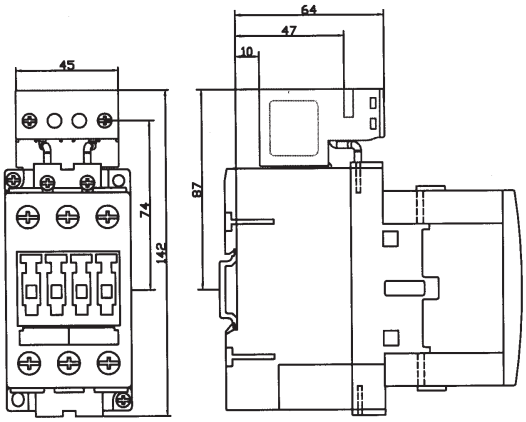

Fig. 3-102: 3RT10 3.-1X.40-0LA2

Frame size S3, Cage Clamp connection

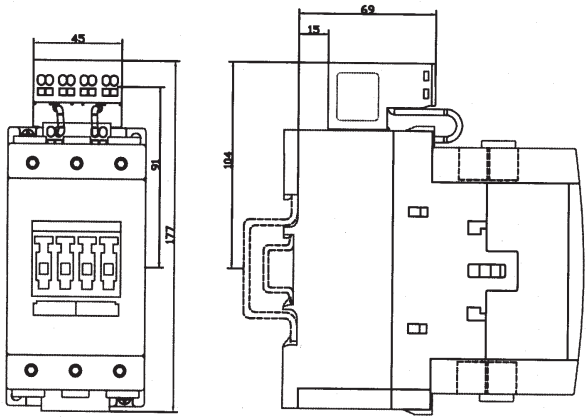

Fig. 3-103: 3RT10 4.-3X.40-0LA2

Frame size S3, screw connection

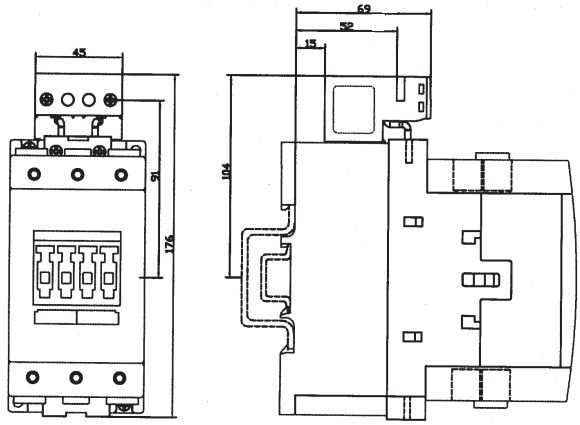

Fig. 3-104: 3RT10 4.-1X.40-0LA2

3RT19 time-delay auxiliary contact block

Frame size S00

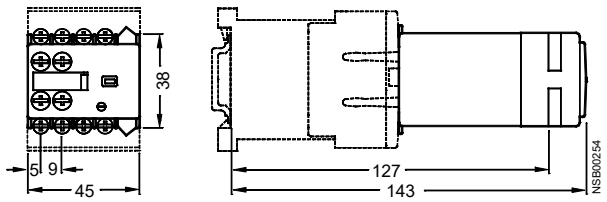

Fig. 3-105: 3RT19 16-2E.., -2F., -2G..

Frame sizes S0 to S3

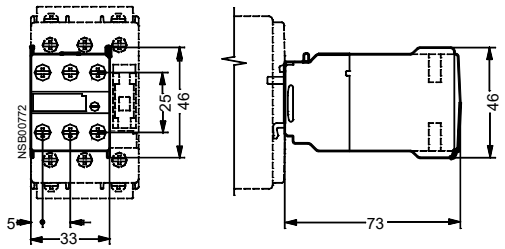

3RT19 26-2E.., -2F., -2G..

3RT19 time-delay time relay blocks, on-delay

Frame size S00

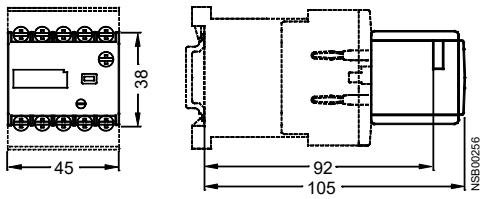

Fig. 3-106: 3RT19 16-2
For attachment to the front of the contactor
(dimensions also apply to off-delay time relay blocks)

Frame sizes S0 to S3

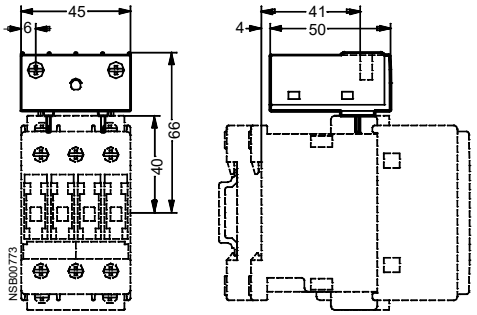

3RT19 26-2
Attachable on the top of the contactor
(dimensions also apply to off-delay time relay blocks and to coupling links (3RH19 24-1GP11)

3RT19 16-4KA soldering pin connection

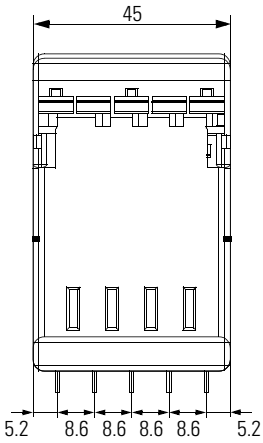

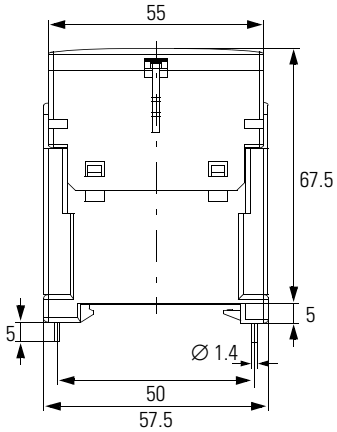

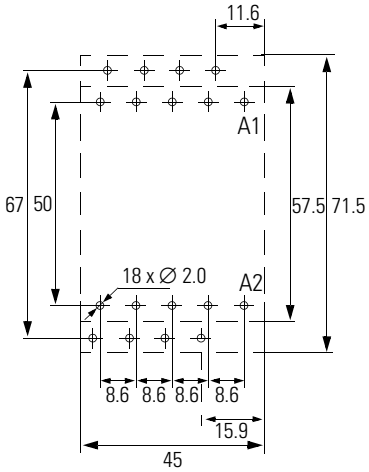

3RT1916-4KA1 attached to S00 device

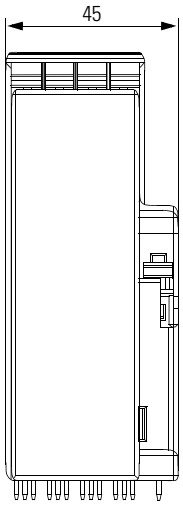

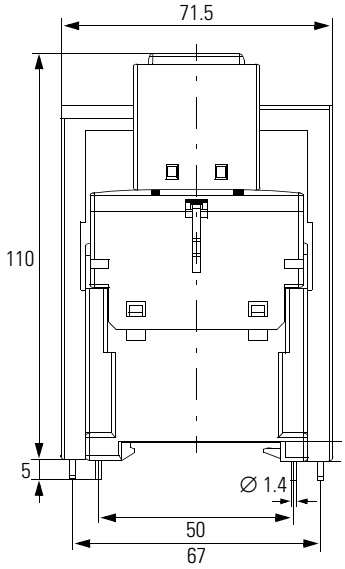

3RT1916-4KA2 attached to S00 device with
front mount auxiliary contact block

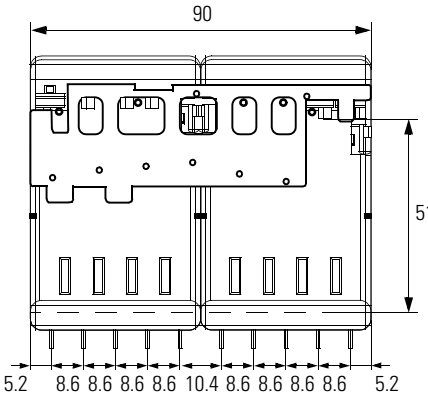

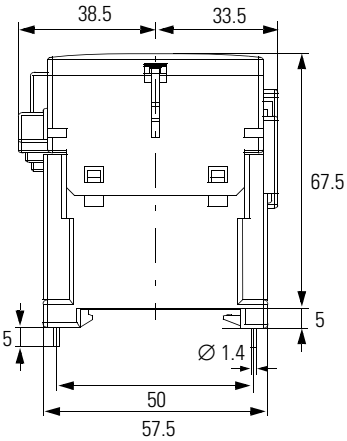

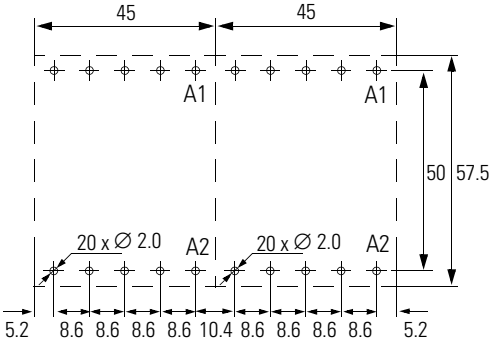

3RA13 reversing contactor combinations

Frame size S00

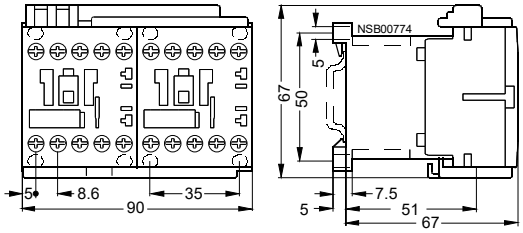

Fig. 3-107: Reversing contactor combinations

Frame size S0

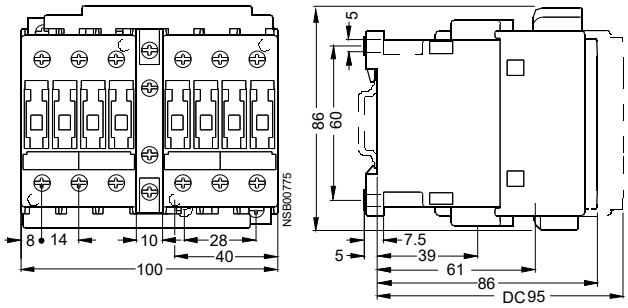

Fig. 3-108: Reversing contactor combination
with mechanical interlock 3RA19 24-2B, side

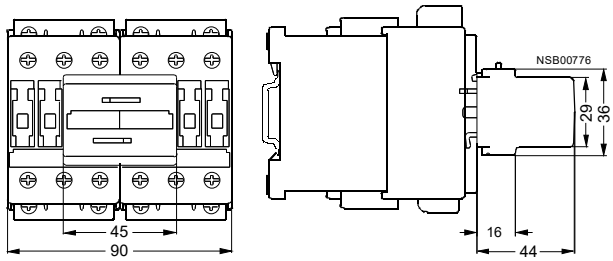

with mechanical interlock 3RA19 24-1A, front

Frame size S2

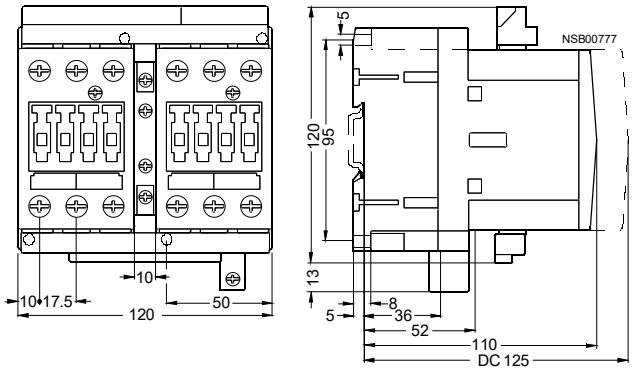

Fig. 3-109: Reversing contactor combination

Frame size S3

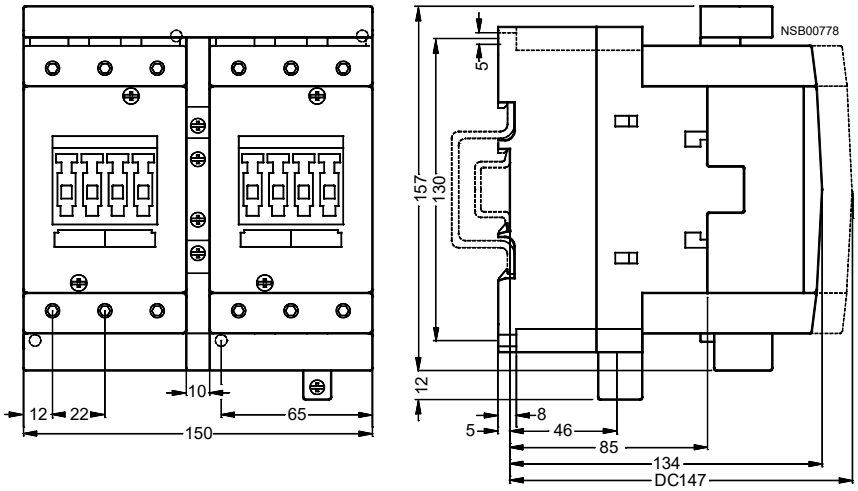

Fig. 3-110: Reversing contactor combination

Mechanical interlocks for 3RA13 combinations

Frame sizes S0 to S3

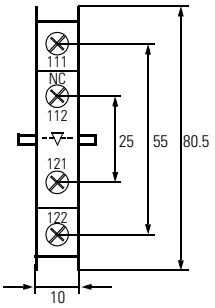

Fig. 3-111: 3RA19 24-2B

Frame sizes S0 to S3

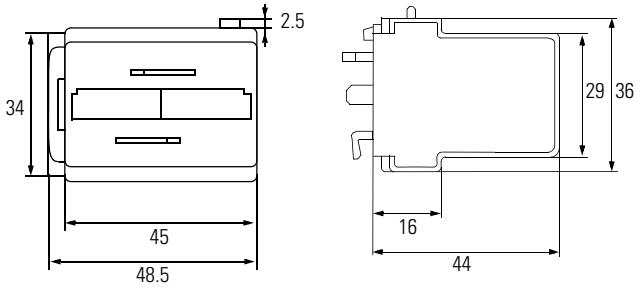

3RA19 24-1A

3RA14 contactor combinations for wye-delta starting

Frame sizes S00 - S00 - S00

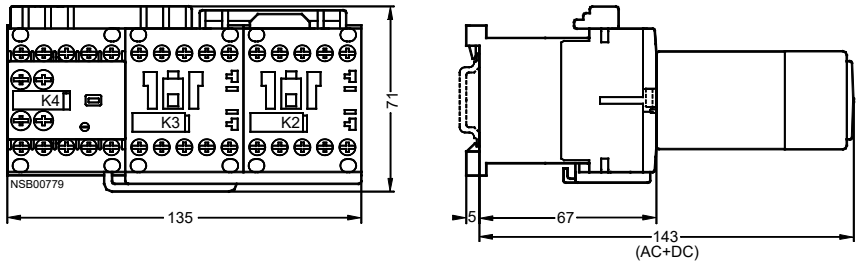

Fig. 3-112: Contactor combinations for wye-delta starting

Frame sizes S0 - S0 - S0

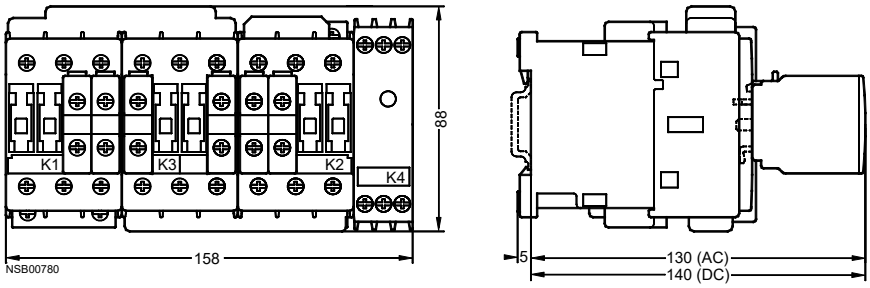

Fig. 3-113: Contactor combinations for wye-delta starting without mechanical interlock

Frame sizes S2 - S2 - S0

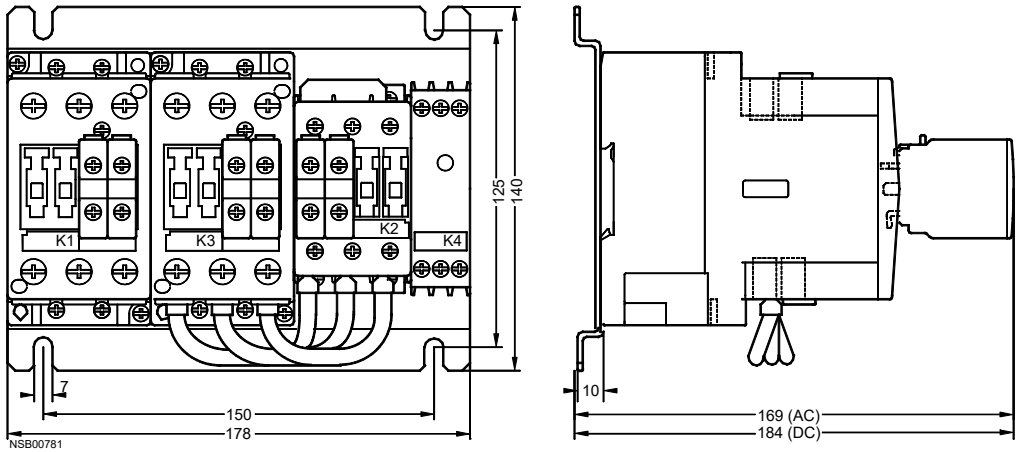

Fig. 3-114: Contactor combinations for wye-delta starting without mechanical interlock (frame sizes S2 - S2 - S0)

Frame sizes S2 - S2 - S2

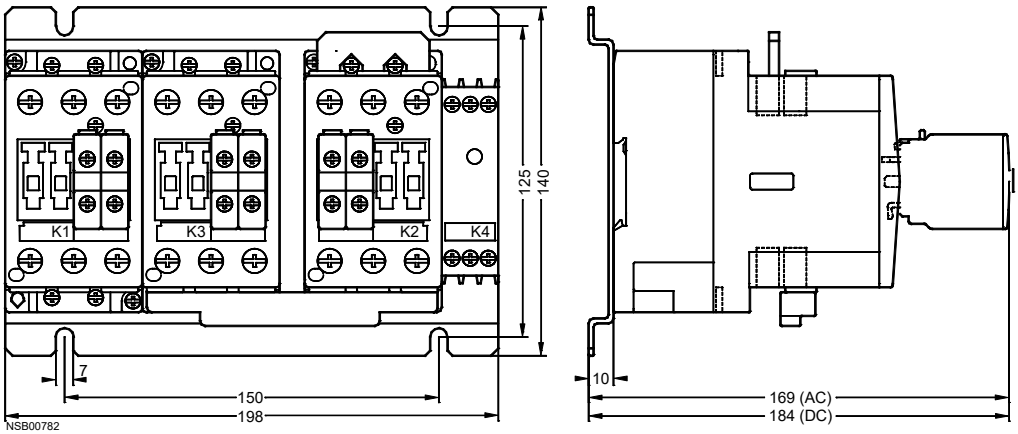

Fig. 3-115: Contactor combinations for wye-delta starting

Frame sizes S3 - S3 - S2

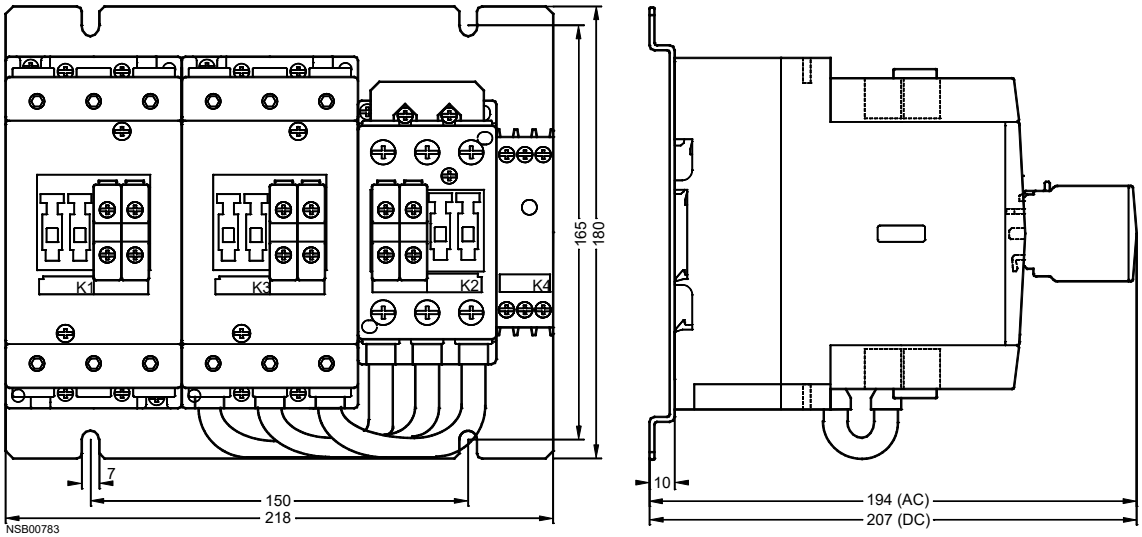

Fig. 3-116: Contactor combinations for wye-delta starting without mechanical interlock

3.7 Technical data

3RT1 Contactor

Auxiliary circuit

Ratings of the auxiliary contacts acc. to IEC 60 947-5-1/EN 60 947-5-1 (VDE 0660 Part 200)
The data is valid for integrated auxiliary contacts and contacts in the auxiliary switch blocks for contactor sizes S00 to S3

Contactor	Frame size		**S00 to S3**
Rated insulation voltage U_i (pollution degree 3)	V		690
For laterally mountable 3RH19 21-.EA . . and 3RH19 21-.KA . . auxiliary switch blocks	V		max. 500
Conventional thermal current I_{th} = rated operational current I_e/AC-12	A		10
Load ratings with AC Rated operational current I_e/AC-15/AC-14			
at rated operational voltage U_e	24 V	A	6
	110 V	A	6
	125 V	A	6
	220 V	A	6
	230 V	A	6
	380 V	A	3
	400 V	A	3
	500 V	A	2
	660 V[2])	A	1
	690 V[2])	A	1
Load ratings with DC Rated operational current I_e/DC-12			
at rated operational voltage Ue	24 V	A	10
	60 V	A	6
	110 V	A	3
	125 V	A	2
	220 V	A	1
	440 V	A	0.3
	600 V[2])	A	0.15
Rated operational current I_e/DC-13			
at rated operational voltage Ue	24 V	A	10[1])
	60 V	A	2
	110 V	A	1
	125 V	A	0.9
	220 V	A	0.3
	440 V	A	0.14
	600 V[2])	A	0.1
Contact reliability at 17 V, 1 mA acc. to IEC 60 947-5-4			Frequency of contact faults < 10^{-8} i.e. less than 1 fault per 100 million operating cycles

1) DC-13: attachable auxiliary switch blocks for frame size S00: 6 A
2) With laterally attachable auxiliary switch blocks: switching capacity only up to 500 V

3RT10 contactors for switching motors

General data

Contactor	Frame size Type			**S00** **3RT1. 1.**
Rated insulation voltage U_i (pollution degree 3)			V	690
Rated impulse strength U_{imp}			kV	6
Safe isolation between coil and main contacts (acc. to DIN VDE 0106 Part 101 and A1 [draft 2/89])			V	400
Permissible ambient temperature		For operation	°C	–25 to +60
		During storage	°C	–55 to +80
Degree of protection in acc. with IEC 60 947-1 and DIN 40 050				IP20
Shock resistance	Rectangular impulse	AC operation	*g*/ms	7/5 and 4.2/10
		DC operation	*g*/ms	7/5 and 4.2/10
	Sine pulse	AC operation	*g*/ms	9.8/5 and 5.9/10
		DC operation	*g*/ms	9.8/5 and 5.9/10

Short-circuit protection for contactors without overload relay

Main circuit		
Fuse-links, performance class gL/gG		
NH type 3NA, DIAZED type 5SB, NEOZED type 5SE		
– In acc. with IEC 60 947-4/EN 60 947-4 (VDE 0660 Part 102)	A	35
Coordination type "2" [1])	A	20
weld-free [2])	A	10
Or miniature circuit breaker (up to 230 V) with C characteristic (Short-circuit current 1 kA, coordination type 1)	A	10

3RT1 01 contactors for switching motors

Contactor	Frame size Type		**S00** **3RT1.1.**
Auxiliary circuit			
Fuse-links, performance class gL/gG		A	10
DIAZED type 5SB, NEOZED type 5SE (weld-free fusing at $I_k \geq 1$ kA)			
or miniature circuit breaker (up to 240V) with C characteristic (Short-circuit current $I_k < 400$ A)		A	6

1) Corresponds to section from IEC 60 947-4 (VDE 0660 Part 102):
Coord. type 1:
The destruction of the contactor and the overload relay is permissible.
The contactor and/or overload relay must be replaced, if necessary.

Coord. type 2
The overload relay must not be damaged. Contact welding on the contactor is permissible, if it can be easily separated again

2) Testing according to IEC 60 947-4-1

Contactor	Frame size Type		**S00** **3RT1.1.**

Control

Operating range of the magnet coils	AC		at 50 Hz: 0.8 to 1.1 x U_s at 60 Hz: 0.85 to 1.1 x U_s
	DC		at +50 °C: 0.8 to 1.1 x U_s at +60 °C: 0.85 to 1.1 x U_s

Power input of the magnet coils (with coil in cold state and 1.0 x U_s)			**Standard version**		**For USA and Canada**	
AC operation		Hz	50/60		50	60
	Making capacity	VA	27	/24.3	26.4	31.7
	cos φ		0.8	/0.75	0.81	0.77
			4.4	/3.4	4.7	5.1
	Holding power	VA	0.27	/0.27	0.26	0.27
	cos φ					
DC operation	Making capacity = Holding power	W	3.3			

Contactor	Frame size Type		**S00** **3RT10 15**	**S00** **3RT10 16**	**S00** **3RT10 17**

Main Circuit

Current carrying capacity with alternating current

Utilization category AC-1, switching of resistive loads					
Rated operational currents I_e	at 40 °C to 690 V	A	18	22	22
	at 60 °C to 690 V	A	16	20	20
Rated power	at 230 V	kW	6.3	7.5	7.5
of three-phase loads[1])	400 V	kW	11	13	13
cos φ = 0.95 (at 60 °C)	500 V	kW	13.8	17	17
	690 V	kW	19	22	22
Minimum conductor cross-section loaded with I_e	at 40 °C	mm^2	2.5	2.5	2.5
	60 °C	mm^2	2.5	2.5	2.5
Utilization category AC-2 and AC-3					
Rated operational currents I_e	to 400 V	A	7	9	12
	500 V	A	5	6.5	9
	690 V	A	4	5.2	6.3
Rated power of motors with slip-ring or squirrel-cage rotor at 50 Hz and 60 Hz					
	230 V	kW	2.2	3	3
	400 V	kW	3	4	5.5
	500 V	kW	3.5	4.5	5.5
	690 V	kW	4	5.5	5.5
Thermal stress	10-s-current[2])	A	56	72	96
Power loss per conducting path	at I_e/AC-3	W	0.42	0.7	1.24

1) Resistance-heated industrial furnaces and electric heating appliances, etc. (increased current consumption at startup of heating taken into account).

2) In acc. with VDE 0660 Part 102, rated value for different startup conditions see Catalog section 4.

3RT1 01 contactors for switching motors

Contactor	Frame size Type			S00 3RT1. 15	S00 3RT1. 16	S00 3RT1. 17
Main Circuit						
Current carrying capacity with alternating current						
Utilization category AC-4						
Rated operational current I_e (at $I_a = 6 \times I_e$)		to 400 V	A	6.5	8.5	8.5
Rated power of squirrel-cage motors at 50 Hz and 60 Hz		at 400 V	kW	3	4	4
for contact service life of approximately 200 000 operating cycles: Rated operational currents I_e		to 400 V	A	2.6	4.1	4.1
		690 V	A	1.8	3.3	3.3
		at 230 V	kW	0.67	1.1	1.1
		400 V	kW	1.15	2	2
		500 V	kW	1.45	2	2
		690 V	kW	1.15	2.5	2.5

Load ratings with DC

Utilization category DC-1, switching of resistive loads (L/R ≤ 1 ms)

Rated operational current I_e (at 60 °C)

Number of conducting paths in series connection		1	2	3	1	2	3	1	2	3
to 24 V	A	15	15	15	20	20	20	20	20	20
60 V	A	15	15	15	20	20	20	20	20	20
110 V	A	1.5	8.4	15	2.1	12	20	2.1	12	20
220 V	A	0.6	1.2	15	0.8	1.6	20	0.8	1.6	20
440 V	A	0.42	1.6	0.9	0.6	0.8	1.3	0.6	0.8	1.3
600 V	A	0.42	0.5	0.7	0.6	0.7	1	0.6	0.7	1

Utilization category DC-3 and DC-5, shunt and series motors (L/R ≤ 15 ms)

Rated operational current I_e (at 60 °C)

Number of conducting paths in series connection		1	2	3	1	2	3	1	2	3
to 24 V	A	15	15	15	20	20	20	20	20	20
60 V	A	0.35	3.5	15	0.5	5	20	0.5	5	20
110 V	A	0.1	0.25	15	0.15	0.35	20	0.15	0.35	20
220 V	A	–	–	1.2	–	–	1.5	–	–	1.5
440 V	A	–	–	0.14	–	–	0.2	–	–	0.2
600 V	A	–	–	0.14	–	–	0.2	–	–	0.2

Operating frequency

Operating frequency *z* in operating cycles/hour			AC-/DC operation
Contactors without overload relays	no-load operating frequency	1/h	10 000
Dependence of the operating frequency z' from the operating current I' and operating voltage U':	Rated operation		
	according to AC-1	1/h	1 000
$z' = z \cdot \frac{I_e}{I'} \cdot \left(\frac{400\ V}{U'}\right)^{1.5}$ 1/h	according to AC-2	1/h	750
	according to AC-3	1/h	750
	according to AC-4	1/h	250
Contactors with overload relay (average value)		1/h	15

3RT10 2 contactors for switching motors

Contactor	Frame size Type			**S0** **3RT10 2.**

General data

Rated insulation voltage U_i (pollution degree 3)			V	690
Safe isolation between coil and main contacts (acc. to DIN VDE 0106 Part 101 and A1 [draft 2/89])			V	400
Permissible ambient temperature		for operation in storage	°C °C	–25 to +60 –55 to +80
Degree of protection in acc. with IEC 60 947-1 and DIN 40 050				front: IP20 terminal space: IP00
Shock resistance	Rectangular impulse	AC operation	*g*/ms	8.2/5 and 4.9/10
		DC operation	*g*/ms	10/5 and 7.5/10
	Sine pulse	AC operation	*g*/ms	12.5/5 and 7.8/10
		DC operation	*g*/ms	15/5 and 10/10

Short-circuit protection for Contactors without overload relay

Short-circuit protection for contactors with overload relay see chapter 4.
Short-circuit protection for weld-free contactors see chapter 5 (overload - and short-circuit protection only with 3RV10 circuit breaker/ MSP).
Short-circuit protection for fuseless loadfeeders see chapter 5.

Contactor	Frame size Type			**S0** **3RT10 23, 3RT10 24, 3RT10 25**	**S0** **3RT10 26**
Main Circuit					
Fuse-links, performance class gL/gG					
NH type 3NA, DIAZED type 5SB, NEOZED type 5SE					
with fuses					
– according to IEC 60 947-4/EN 60 947-4 (VDE 0660 part 102)		Coord. type 1 [1])	A	63	100
		Coord. type 2 [1])	A	25	35
		weld-free[2])	A	10	16
or miniature circuit breaker with C characteristic			A	25	32
(Short-circuit current 3 kA, Coord. type 1) [1])					
Auxiliary circuit					
Fuse-links, performance class gL/gG			A	10	10
DIAZED type 5SB, NEOZED type 5SE					
(weld-free fusing at $I_k \geq 1$ kA)					
or miniature circuit breaker with C characteristic (Short-circuit current $I_k < 400$ A)			A	10	10

Contactor	Frame size Type			**S0** **3RT10 2.**

Control

Operating range of the magnet coils		AC/DC		0.8 to 1.1 x U_s

Power input of the magnet coils (coil in cold state and at 1.0 x Us)				**Standard version**		**For USA and Canada**	
AC operation			Hz	50	50/60	50	60
	Making capacity cos φ		VA	61 0.82	64 /63 0.72 / 0.74	61 0.82	69 0.76
	Holding power cos φ		VA	7.8 0.24	8.4 / 6.8 0.24 / 0.28	7.8 0.24	7.5 0.28
DC operation	Making capacity = Holding power		W	5.4	5.4	5.4	5.4

1) Corresponds to section from IEC 60 947-4 (VDE 0660 Part 102):
Coord. type 1:
The destruction of the contactor and the overload relay is permissible. The contactor and/or overload relay must be replaced, if necessary.

Coord. type 2:
The overload relay must not be damaged. Contact welding on the contactor is permissible, if it can be easily separated again from the contactor.

2) Test conditions in acc. with IEC 60 947-4-1.
weld-free 3RT11 contactors, see Chapter 5 (overload and short-circuit protection only with the 3RV10 circuit breaker).

3RT10 2 contactors for switching motors

Contactor	Frame size Type			S0 3RT10 23	S0 3RT10 24	S0 3RT10 25	S0 3RT10 26
Main Circuit							
Current carrying capacity with alternating current							
Utilization category AC-1, switching of resistive loads							
Rated operational currents I_e	at 40 °C to 690 V	A		40	40	40	40
	at 60 °C to 690 V	A		35	35	35	35
Rated power	at 230 V	kW		13.3	13.3	13.3	13.3
of three-phase loads[1])	400 V	kW		23	23	23	23
	500 V	kW		29	29	29	29
cos φ = 0.95 (at 60 °C)	690 V	kW		40	40	40	40
Minimum conductor cross-section loaded with I_e	at 40 °C	mm^2		10	10	10	10
	60 °C	mm^2		10	10	10	10

1) Resistance-heated industrial furnaces and electric heating appliances, etc. (increased current consumption at startup of heating taken into account).

Utilization category AC-2 and AC-3						
Rated operational currents I_e	to 400 V	A	9	12	17	25
	500 V	A	6.5	12	17	18
	690 V	A	5.2	9	13	13
Rated power of motors with slip-ring or squirrel-cage rotor at 50 Hz and 60 Hz	at 110 V	kW	1.1	1.5	2.2	3
	120 V	kW	1.1	1.5	2.2	3
	127 V	kW	1.1	1.5	2.2	3
	200 V	kW	2.2	3	4	5.5
	220 V	kW	3	3	4	5.5
	230 V	kW	3	3	4	5.5
	240 V	kW	3	3	4	5.5
	380 V	kW	4	5.5	7.5	11
	400 V	kW	4	5.5	7.5	11
	415 V	kW	4	5.5	7.5	11
	440 V	kW	4	5.5	9	11
	460 V	kW	4	5.5	9	11
	500 V	kW	4.5	7.5	10	11
	575 V	kW	4.5	7.5	10	11
	660 V	kW	5.5	7.5	11	11
	690 V	kW	5.5	7.5	11	11
Thermal stress	10-s-current[2])	A	80	110	150	200
Power loss per conducting path	at I_e/AC-3	W	0.4	0.5	0.9	1.6
Utilization category AC-4 (at $I_a = 6 \times I_e$) (contact service life of approximately 200 000 operation cycles						
Rated operational current I_e	to 400 V	A	8.5	12.5	15.5	15.5
	at 400 V	kW	4	5.5	7.5	7.5
Rated operational currents I_e	to 400 V	A	4.1	5.5	7.7	9
	690 V	A	3.3	5.5	7.7	9
Rated power of squirrel-cage motors at 50 Hz and 60 Hz	at 110 V	kW	0.5	0.73	1	1.2
	230 V	kW	1.1	1.5	2	2.5
	400 V	kW	2	2.6	3.5	4.4
	500 V	kW	2	3.3	4.6	5.6
	690 V	kW	2.5	4.6	6	7.7

1) Resistance-heated industrial furnaces and electric heating appliances, etc. (increased current consumption at startup of heating taken into account).

2) In acc. with VDE 0660 Part 102, rated value for different startup conditions see Catalog section 4.

3RT10 2 contactors for switching motors

Load ratings with DC

Contactor	Frame size Type		**S0** **3RT10 23, 3RT10 24**			**S0** **3RT10 25**			**S0** **3RT10 26**		
Utilization category DC-1, switching of resistive loads (L/R ≤ 1 ms)											
Rated operational current I_e (at 60 °C)											
	Number of conducting paths in series connection		1	2	3	1	2	3	1	2	3
	to 24 V	A	35	35	35	35	35	35	35	35	35
	60 V	A	20	35	35	20	35	35	20	35	35
	110 V	A	4.5	35	35	4.5	35	35	4.5	35	35
	220 V	A	1	5	35	1	5	35	1	5	35
	440 V	A	0.4	1	2.9	0.4	1	2.9	0.4	1	2.9
	600 V	A	0.25	0.8	1.4	0.25	0.8	1.4	0.25	0.8	1.4
Utilization category DC-3 and DC-5, shunt and series motors (L/R ≤ 15 ms)											
Rated operational current I_e (at 60 °C)											
	Number of conducting paths in series connection		1	2	3	1	2	3	1	2	3
	to 24 V	A	20	35	35	20	35	35	20	35	35
	60 V	A	5	35	35	5	35	35	5	35	35
	110 V	A	2.5	15	35	2.5	15	35	2.5	15	35
	220 V	A	1	3	10	1	3	10	1	3	10
	440 V	A	0.09	0.27	0.6	0.09	0.27	0.6	0.09	0.27	0.6
	600 V	A	0.06	0.16	0.6	0.06	0.16	0.6	0.06	0.16	0.6

Operating frequency

Operating frequency *z* in operating cycles/hour			AC	DC		AC	DC		AC	DC
Contactors without overload relays	no-load operating frequency	1/h	5000	1500		5000	1500		5000	1500
Dependence of the operating frequency z' from the operating current and operating voltage U':			AC/DC			AC/DC			AC/DC	
$z' = z \cdot \frac{I_e}{I'} \cdot \left(\frac{400\ V}{U'}\right)^{1.5}$ 1/h	with AC-1	1/h	1000			1000			1000	
	with AC-2	1/h	1000			1000			750	
	with AC-3	1/h	1000			1000			750	
	with AC-4	1/h	300			300			250	
Contactors with overload relay (average value)		1/h	15			15			15	
Use in stator circuits of slip-ring motors (AC-2)										
		Rel. OD								
		20 %	40 A			40 A			54 A	
Stator currents	Voltages to 500 V	40 %	40 A			40 A			43 A	
		60 %	38 A			38 A			38 A	
		80 %	35 A			35 A			35 A	
		Rel. OD								
		20 %	26 A			26 A			26 A	
Stator currents	Voltages to 690 V	40 %	26 A			26 A			26 A	
		60 %	26 A			26 A			26 A	
		80 %	26 A			26 A			26 A	
Use as rotor contactors of slip-ring motors										
		Rel. OD								
		10 %	40 A			40 A			75 A	
Locked rotor voltages at **Starting up to 1380 V** **Variable speed up to 690 V** **Plugging up to 690 V**		20 %	40 A			40 A			75 A	
		40 %	40 A			40 A			67 A	
		60 %	40 A			40 A			60 A	
		80 %	40 A			40 A			54 A	
Loading		100 %	40 A			40 A			54 A	
		Rel. ED								
		10 %	—			—			—	
Locked rotor voltages at **Starting up to 1500 V** **Variable speed up to 750 V** **Plugging up to 750 V**		20 %	—			—			—	
		40 %	—			—			—	
		60 %	—			—			—	
		80 %	—			—			—	
Loading		100 %	—			—			—	

Important! The shown current values are good for Delta switching of the contacts.

3RT10 3 contactors for switching motors

Contactor	Frame size Type			**S2** **3RT10 3.**

General data

Mechanical life	Basic units Basic unit with attached auxiliary switch block Electronically optimized auxiliary switch block		operat- ing cycles	10 Mio. 10 Mio. 5 Mio.
Rated insulation voltage U_i (pollution degree 3)			V	690
Safe isolation between coil and main contacts (acc. to DIN VDE 0106 Part 101 and A1 [draft 2/89])			V	400
Permissible ambient temperature		for operation in storage	°C °C	–25 to +60 –55 to +80
Degree of protection in acc. with IEC 60 947-1 and DIN 40 050				front: IP20 terminal space: IP00
Shock resistance	Rectangular impulse	AC and DC operation	*g*/ms	10/5 and 5/10
	Sine pulse	AC and DC operation	*g*/ms	15/5 and 8/10

Contactor	Frame size Type			**S2** **3RT10 34**	**S2** **3RT10 35**	**S2** **3RT10 36**
Short-circuit protection for contactors without overload relay				Short-circuit protection for contactors with overload relay see chapter 4. Short-circuit protection for weld-free contactors see chapter 5 (overload - and short-circuit protection only by 3RV10 circuit breaker/MSP). Short-circuit protection for fuseless loadfeeders see chapter 5.		
Main Circuit						
Fuse-links, performance class gL/gG						
NH type 3NA, DIAZED type 5SB, NEOZED type 5SE						
– according to IEC 60 947-4/EN 60 947-4 (VDE 0660 part 102)		Coord. type 1 [1])	A	125	125	160
		Coord. type 2 [1])	A	63	63	80
		weld-free[2])	A	16	16	50
Auxiliary circuit						
Fuse-links, performance class gL/gG			A	10	10	10
DIAZED type 5SB, NEOZED type 5SE						
(weld-free fusing at $I_k \geq 1$ kA)						
or miniature circuit breaker with C characteristic (Short-circuit current I_k < 400 A)			A	10	10	10

Control

Operating range of the magnet coils		AC/DC		0.8 to 1.1 x U_s		
Power input of the magnet coils (with coil in cold state and at 1.0 x Us)				**Standard version**		
AC operation			Hz	50	50/60	50	50/60
		Making capacity cos φ	VA	104 0.78	127 /113 0.73/ 0.69	145 0.79	170 /155 0.76/ 0.72
		Holding power cos φ	VA	9.7 0.42	11.3 / 9.5 0.42/ 0.42	12.5 0.36	15 / 11.8 0.35/ 0.38
				For USA and Canada		
			Hz	50	60	50	60
		Making capacity cos φ	VA	108 0.76	120 0.7	150 0.77	166 0.71
		Holding power cos φ	VA	9.6 0.42	10.1 0.42	12.5 0.35	12.6 0.37
DC operation		Making capacity = Holding power	W	13.3	13.3	13.3	13.3

1) Corresponds to section from IEC 60 947-4 (VDE 0660 Part 102):
Coord. type 1:
The destruction of the contactor and the overload relay is permissible. The contactor and/or overload relay must be replaced, if necessary.

Coord. type 2:
The overload relay must not be damaged. Contact welding on the contactor is permissible, if it can be easily separated again from the contactor.

2) Test conditions in acc. with IEC 60 947-4-1
weld-free 3RT11 contactors, see Chapter 5 (overload and short-circuit protection only with the 3RV10 circuit breaker).

3RT10 3 contactors for switching motors

Contactor	Frame size Type			S2 3RT10 34	S2 3RT10 35	S2 3RT10 36
Main Circuit						
Current carrying capacity with alternating current						
Utilization category AC-1, switching of resistive loads						
Rated operational currents I_e	at 40 °C to 690 V	A		50		60
	at 60 °C to 690 V	A		45		55
Rated power	at 230 V	kW		18		22
of three-phase loads[1])	400 V	kW		31		38
	500 V	kW		39		46
cos φ = 0.95 (at 60 °C)	690 V	kW		54		66
Minimum conductor cross-section loaded with I_e	at 40 °C	mm^2		16		16
	60 °C	mm^2		10		16
Utilization category AC-2 and AC-3						
Rated operational currents I_e	to 400 V	A		32	40	50
	500 V	A		32	40	50
	690 V	A		20	24	24
Rated power of motors	at 127 V	kW		4	5.5	7.5
with slip-ring or squirrel-cage rotor at 50 Hz and 60 Hz	200 V	kW		7.5	7.5	11
	220 V	kW		7.5	11	11
	230 V	kW		7.5	11	15
	240 V	kW		7.5	11	15
	380 V	kW		15	18.5	22
	400 V	kW		15	18.5	22
	415 V	kW		15	18.5	22
	440 V	kW		18.5	18.5	22
	460 V	kW		18.5	22	30
	500 V	kW		18.5	22	30
	575 V	kW		18.5	22	22
	660 V	kW		18.5	22	22
	690 V	kW		18.5	22	22
Thermal stress	10-s-current[2])	A		320	400	400
Power loss per conducting path	at I_e/AC-3	W		1.8	2.6	5
Utilization category AC-4 (at I_a = 6 x I_e)						
Rated operational current I_e	to 400 V	A		29	35	41
Rated power of squirrel-cage motors	at 400 V	kW		15	18.5	22
at 50 Hz and 60 Hz						
for contact service life of approximately 200 000 operating cycles:						
Rated operational currents I_e	to 400 V	A		15.6	18.5	24
	690 V	A		15.6	18.5	24
	at 230 V	kW		4.7	5.4	7.3
	400 V	kW		8.2	9.5	12.6
	500 V	kW		9.8	11.8	15.8
	690 V	kW		13	15.5	21.8

1) Resistance-heated industrial furnaces and electric heating appliances, etc. (increased current consumption at startup of heating taken into account).

2) In acc. with VDE 0660 Part 102, rated value for different startup conditions see Catalog section 4.

3RT1 03 contactors for switching motors

Load ratings with DC

Contactor	Frame size Type		**S2 3RT10 34**			**S2 3RT10 35**			**S2 3RT10 36**		
Utilization category DC-1, switching of resistive loads (L/R ≤ 1 ms)											
Rated operational current I_e (at 60 °C)											
	Number of conducting paths in series connection		1	2	3	1	2	3	1	2	3
	to 24 V	A	45	45	45	55	55	55	50	50	50
	60 V	A	20	45	45	23	45	45	23	45	45
	110 V	A	4.5	45	45	4.5	45	45	4.5	45	45
	220 V	A	1	5	45	1	5	45	1	5	45
	440 V	A	0.4	1	2.9	0.4	1	2.9	0.4	1	2.9
	600 V	A	0.25	0.8	1.4	0.25	0.8	1.4	0.25	0.8	1.4
Utilization category DC-3 and DC-5, shunt and series motors (L/R ≤ 15 ms)											
Rated operational current I_e (at 60 °C)											
	Number of conducting paths in series connection		1	2	3	1	2	3	1	2	3
	to 24 V	A	35	45	45	35	55	55	35	50	50
	60 V	A	6	45	45	6	45	55	6	45	50
	110 V	A	2.5	25	45	2.5	25	55	2.5	25	50
	220 V	A	1	5	25	1	5	25	1	5	25
	440 V	A	0.1	0.27	0.6	0.1	0.27	0.6	0.1	0.27	0.6
	600 V	A	0.06	0.16	0.35	0.06	0.16	0.35	0.06	0.16	0.35

Operating frequency

Operating frequency *z* in operating cycles/hour			AC	DC	AC	DC	AC	DC	
Contactors without overload relays	no-load operating frequency	1/h	5000	1500	5000	1500	5000	1500	
Dependence of the operating frequency z'			AC/DC		AC/DC		AC/DC		
from the operating current I' and operating voltage U':	with AC-1	1/h	1200		1200		1000		
	with AC-2	1/h	750		600		400		
$z' = z \cdot \frac{I_e}{I'} \cdot \left(\frac{400\ V}{U'}\right)^{1.5}$ 1/h	with AC-3	1/h	1000		1000		800		
	with AC-4	1/h	250		300		300		
Contactors with overload relay (average value)		1/h	15		15		15		
Use in stator circuits of slip-ring motors (AC-2)									
		Rel. OD							
		20 %	69 A		85 A		77 A		
Stator currents	Voltages to 500 V	40 %	55 A		67 A		61 A		
		60 %	49 A		60 A		55 A		
		80 %	45 A		55 A		50 A		
		Rel. OD							
		20 %	62 A		80 A		77 A		
Stator currents	Voltages to 690 V	40 %	55 A		67 A		61 A		
		60 %	49 A		60 A		55 A		
		80 %	45 A		55 A		50 A		
Use as rotor contactors of slip-ring motors									
		Rel. OD							
		10 %	115 A		135 A		150 A		
Locked rotor voltages at **Starting up to 1380 V** **Variable speed up to 690 V** **Plugging up to 690 V**		20 %	106 A		131 A		118 A		
		40 %	86 A		106 A		96 A		
		60 %	77 A		95 A		86 A		
		80 %	70 A		86 A		78 A		
Loading		100 %	70 A		86 A		78 A		
		Rel. OD							
		10 %	—		—		—		
Locked rotor voltages at **Starting up to 1500 V** **Variable speed up to 750 V** **Plugging up to 750 V**		20 %	—		—		—		
		40 %	—		—		—		
		60 %	—		—		—		
		80 %	—		—		—		
Loading		100 %	—		—		—		

Important! The shown current values are good for Delta switching of the contacts.

3RT10 4 contactors for switching motors

Contactor	Frame size Type			S3 3RT10 4.

General data

Mechanical life	Basic units Basic unit with attached auxiliary switch block Electronically optimized auxiliary switch block		operat-ing cycles	10 Mio. 10 Mio. 5 Mio.
Rated insulation voltage U_i (pollution degree 3)			V	1000
Safe isolation between coil and main contacts (acc. to DIN VDE 0106 Part 101 and A1 [draft 2/89])			V	690
Permissible ambient temperature		for operation in storage	°C °C	–25 to +60 –55 to +80
Degree of protection in acc. with IEC 60 947-1 and DIN 40 050				front: IP20 terminal space: IP00
Shock resistance	Rectangular impulse	AC and DC operation	*g*/ms	6.8/5 and 4/10
	Sine pulse	AC and DC operation	*g*/ms	10.6/5 and 6.2/10

Contactor	Frame size Type			S3 3RT10 44	S3 3RT10 45	S3 3RT10 46
Short-circuit protection for contactors without overload relay				Short-circuit protection for contactors with overload relay see chapter 4. Short-circuit protection for fuseless load feeders see chapter 5.		
Main Circuit						
Fuse-links, performance class gL/gG						
NH type 3NA, DIAZED type 5SB, NEOZED type 5SE						
– according to IEC 60 947-4/EN 60 947-4 (VDE 0660 part 102)		Coord. type 1 [1])	A	250	250	250
		Coord. type 2 [1])	A	125	160	160
		weld-free [2])	A	63	100	100
Auxiliary circuit						
Fuse-links, performance class gL/gG			A	10	10	10
(weld-free fusing at $I_k \geq 1$ kA)						
DIAZED type 5SB, NEOZED type 5SE						
or miniature circuit breaker with C characteristic (Short-circuit current $I_k < 400$ A)			A	10	10	10

1) Corresponds to section from IEC 60 947-4 (VDE 0660 Part 102):
Coord. type 1:
The destruction of the contactor and the overload relay is permissible. The contactor and/or overload relay must be replaced, if necessary.
Coord. type 2:
The overload relay must not be damaged. Contact welding on the contactor is permissible, if it can be easily separated again from the contactor.

2) Test conditions in acc. with IEC 60 947-4-1.

Contactor	Frame size Type			S3 3RT10 44		S3 3RT10 45		S3 3RT10 46
Control								
Operating range of the magnet coils		AC/DC		0.8 to 1.1 x U_s				
Power input of the magnet coils (with coil in cold state and at 1.0 x Us)				**Standard version**				
AC operation			Hz	50	50/60	50	50/60	
	Making capacity cos φ		VA	218 0.61	247 /211 0.62/ 0.57	270 0.68	298 /274 0.7/ 0.62	
	Holding power cos φ		VA	21 0.26	25 / 18 0.27/ 0.3	22 0.27	27 / 20 0.29/ 0.31	
				For USA and Canada				
			Hz	50	60	50	60	
	Making capacity cos φ		VA	218 0.61	232 0.55	270 0.68	300 0.52	
	Holding power cos φ		VA	21 0.26	20 0.28	22 0.27	21 0.29	
DC operation	Making capacity = Holding power		W	15		15		

3RT10 4 Contactors for switching motors

Contactor	Frame size Type			S3 3RT10 44	S3 3RT10 45	S3 3RT10 46
Main Circuit						
Current carrying capacity with alternating current						
Utilization category AC-1, switching of resistive loads						
Rated operational currents I_e	at 40 °C to 690 V	A		100	120	120
	1000 V	A		50	60	70
	at 60 °C to 690 V	A		90	100	100
	1000 V	A		40	50	60
Rated power	at 230 V	kW		34	38	38
of three-phase loads [1])	400 V	kW		59	66	66
	500 V	kW		74	82	82
cos φ = 0.95 (at 60 °C)	690 V	kW		102	114	114
	1000 V	kW		66	82	98
Minimum conductor cross-section loaded with I_e	at 40 °C	mm^2		35	50	50
	60 °C	mm^2		35	35	35
Utilization category AC-2 and AC-3						
Rated operational currents I_e	to 400 V	A		65	80	95
	500 V	A		65	80	95
	690 V	A		47	58	58
	1000 V	A		25	30	30
Rated power of motors	at 230 V	kW		18.5	22	22
with slip-ring or squirrel-cage rotor at 50 Hz and 60 Hz	400 V	kW		30	37	45
	500 V	kW		37	45	55
	690 V	kW		55	55	55
	1000 V	kW		30	37	37
Thermal stress	10-s-current[2])	A		600	760	760
Power loss per conducting path	with I_e/AC-3	W		4.6	7.7	10.8
Utilization category AC-4 at (I_a = 6 x I_e)						
Rated operational current I_e	to 400 V	A		55	66	80
Rated power of squirrel-cage motors at 50 Hz and 60 Hz	at 400 V	kW		30	37	45
for contact service life of approximately 200 000 operating cycles:						
Rated operational currents I_e	to 400 V	A		28	34	42
	690 V	A		28	34	42
	1000 V	A		20	23	23
Rated power of squirrel-cage motors	at 230 V	kW		8.7	10.4	12
at 50 Hz and 60 Hz	400 V	kW		15.1	17.9	22
	500 V	kW		18.4	22.4	27
	690 V	kW		25.4	30.9	38
	1000 V	kW		22	30	30

1) Resistance-heated industrial furnaces and electric heating appliances, etc. (increased current consumption at startup of heating taken into account).

2) In acc. with VDE 0660 Part 102, rated value for different startup conditions see Catalog section 4

3RT10 4 contactors for switching motors

Contactor	Frame size Type		S3 3RT10 44			S3 3RT10 45			S3 3RT10 46		
Load ratings with DC											
Utilization category DC-1, switching of resistive loads (L/R ≤ 1 ms)											
Rated operational current I_e (at 60 °C)											
	Number of conducting paths in series connection		1	2	3	1	2	3	1	2	3
	to 24 V	A	90	90	90	100	100	100	100	100	100
	60 V	A	23	90	90	60	100	100	60	100	100
	110 V	A	4.5	90	90	9	100	100	9	100	100
	220 V	A	1	5	70	2	10	80	2	10	80
	440 V	A	0.4	1	2.9	0.6	1.8	1.8	0.6	1.8	4.5
	600 V	A	0.26	0.8	1.4	0.4	1	1	0.4	1	2.6
Utilization category DC-3 and DC-5, shunt and series motors (L/R ≤ 15 ms)											
Rated operational current I_e (at 60 °C)											
	Number of conducting paths in series connection		1	2	3	1	2	3	1	2	3
	to 24 V	A	40	90	90	40	100	100	40	100	100
	60 V	A	6	90	90	6.5	100	100	6.5	100	100
	110 V	A	2.5	90	90	2.5	100	100	2.5	100	100
	220 V	A	1	7	35	1	7	35	1	7	35
	440 V	A	0.15	0.42	0.8	0.15	0.42	0.8	0.15	0.42	0.8
	600 V	A	0.06	0.16	0.35	0.06	0.16	0.35	0.06	0.16	0.35
Operating frequency											
Operating frequency *z* in operating cycles/hour			AC	DC		AC	DC		AC	DC	
Contactors without overload relays	no-load operating frequency	1/h	5000	1000		5000	1000		5000	1000	
Dependence of the operating frequency z' from the operating current I' and operating voltage U':			AC/DC			AC/DC			AC/DC		
	with AC-1	1/h	1000			900			900		
$z' = z \cdot \frac{I_e}{I'} \cdot \left(\frac{400\ V}{U'}\right)^{1.5}$ 1/h	with AC-2	1/h	400			400			350		
	with AC-3	1/h	1000			1000			850		
	with AC-4	1/h	300			300			250		
Contactors with overload relay (average value)		1/h	15			15			15		
Use in stator circuits of slip-ring motors (AC-2)											
		Rel. OD									
		20 %	139 A			154 A			154 A		
Stator currents	Voltages to 500 V	40 %	110 A			122 A			122 A		
		60 %	98 A			109 A			109 A		
		80 %	90 A			100 A			100 A		
		Rel. ED									
		20 %	115 A			137 A			137 A		
Stator currents	Voltages to 690 V	40 %	110 A			122 A			122 A		
		60 %	98 A			109 A			109 A		
		80 %	90 A			100 A			100 A		
Use as rotor contactors of slip-ring motors											
		Rel. OD									
		10 %	235 A			312 A			312 A		
Locked rotor voltages at **Starting up to 1380 V** **Variable speed up to 690 V** **Plugging up to 690 V**		20 %	213 A			237 A			237 A		
		40 %	172 A			192 A			192 A		
		60 %	154 A			172 A			172 A		
		80 %	140 A			156 A			156 A		
Loading		100 %	140 A			156 A			156 A		
		Rel. OD									
		10 %	235 A			312 A			312 A		
Locked rotor voltages at **Starting up to 1500 V** **Variable speed up to 750 V** **Plugging up to 750 V**		20 %	213 A			237 A			237 A		
		40 %	172 A			192 A			192 A		
		60 %	154 A			172 A			172 A		
		80 %	140 A			156 A			156 A		
Loading		100 %	140 A			156 A			156 A		

Important! The shown current values are good for Delta switching of the contacts.

3RT14 contactors 3-pole

Contactor	Frame size Type			**S3** **3RT14 46**
General data				
Mechanical life			Operating cycles	10 Mio.
Service life Utilization category AC-1 at I_e			Operating cycles	0.5 Mio.
Rated insulation voltage U_i (pollution degree 3)			V	1000
Rated impulse strength U_{imp}			kV	6
Safe isolation between coil and main contacts (acc. to DIN VDE 0106 Part 101 and A1 [draft 2/89])			V	690
Permissible ambient temperature		for operation in storage	°C °C	–25 to +60 –55 to +80
Degree of protection in acc. with IEC 60 947-1 and DIN 40 050				front: IP20 terminal space: IP00
Shock resistance				
Rectangular impulse	at AC and DC operation		*g*/ms	6.8/5 and 4/10
Sine pulse	at AC and DC operation		*g*/ms	10.6/5 and 6.2/10
Short-circuit protection for contactors without overload relay				
Main Circuit				
Fuse-links, performance class gL/gG				
NH, type 3NA		Coord. type 1 [1])	A	250
Fuse-links, performance class gR				
SITOR, type 3NE		Coord. type 2 [1])	A	250
Auxiliary circuit				
Fuse-links, performance class gL/gG (weld-free fusing at $I_k \geq 1$ kA) DIAZED type 5SB, NEOZED type 5SE			A A	10 10
Without miniature circuit breaker with C characteristic ($I_k < 400$ A)			A	10

Control

Operating range of the magnet coils			AC/DC	0.8 to 1.1 x U_s			
Power input of the magnet coils (with coil in cold state and 1.0 x U_s)				**Standard version**		**For USA and Canada**	
AC operation			Hz	50	50/60	50	60
	Making capacity cos φ		VA	270 0.68	298 /274 0.7 / 0.62	270 0.68	300 0.52
	Holding power cos φ		VA	22 0.27	27 / 20 0.29 / 0.31	22 0.27	21 0.29
DC operation	Making capacity = Holding power		W	15	15	15	15

1) Corresponds to section from IEC 60 947-4 (VDE 0660 Part 102):
Coord. type 1:
The destruction of the contactor and the overload relay is permissible. The contactor and/or overload relay must be replaced, if necessary.

Coord. type 2:
The overload relay must not be damaged. Contact welding on the contactor is permissible, if it can be easily separated again from the contactor.

3RT14 contactors 3-pole

Contactor	Frame size Type			S3 3RT14 46

Main Circuit

Current carrying capacity with alternating current

Utilization category AC-1, switching of resistive loads

Rated operational currents I_e	at 40 °C to 690 V	A	140
	at 60 °C to 690 V	A	130
	at 1000 V	A	60
Rated power of three-phase loads cos φ = 0.95 (at 60 °C)	at 230 V	kW	50
	400 V	kW	86
	500 V	kW	107
	690 V	kW	148
	1000 V	kW	98
Minimum conductor cross-section loaded with I_e	at 40 °C	mm^2	50
	at 60 °C	mm^2	50

Utilization category AC-2 and AC-3
at a service life of 1.3 Mio. operating cycles

Rated operational current I_e	to 690 V	A	44
Rated power of motors with slip-ring or squirrel-cage rotor at 50 Hz and 60 Hz (at 60 °C)	at 230 V	kW	12.7
	400 V	kW	22
	500 V	kW	29.9
	690 V	kW	38.2
Power loss per conducting path	at I_e/AC-1	W	12.5

Load ratings with DC

Utilization category DC-1, switching of resistive loads L/R ≤ 1 ms)

	Number of conducting paths in series connection		1	2	3
Rated operational currents I_e (at 60 °C)	to 24 V	A	130	130	130
	60 V	A	80	130	130
	110 V	A	12	130	130
	220 V	A	2.5	13	130
	440 V	A	0.8	2.4	6
	600 V	A	0.48	1.3	3.4

Utilization category DC-3 and DC-5, shunt and series motors

	Number of conducting paths in series connection		1	2	3
Rated operational currents I_e (at 60 °C)	to 24 V	A	6	130	130
	60 V	A	3	130	130
	110 V	A	1.25	130	130
	220 V	A	0.35	1.75	4
	440 V	A	0.15	0.42	0.8
	600 V	A	0.1	0.27	0.45

Operating frequency

Operating frequency *z* in operating cycles/hour			AC operation	DC operation
Contactors without overload relay	no-load operating frequency	1/h	5000	1000
Rated operation	according to AC-1	1/h	650	650
	according to AC-3	1/h	1000	1000

Dependence of the operating frequency z'
from the operating current I' and operating voltage U':

$$z' = z \cdot \frac{I_e}{I'} \cdot \left(\frac{400\,V}{U'}\right)^{1.5} \text{ 1/h}$$

3RT13 contactors 4-pole (4 NO) for switching of resistive loads

Contactor	Frame size Type			**S00** **3RT13 16/17**	**S0** **3RT13 25/26**	**S2** **3RT13 36**	**S3** **3RT13 44**	**S3** **3RT13 46**
General data								
Mechanical life			Operating cycles	30 Mio.	10 Mio.			
Service life at Ie/AC-1			Operating cycles	ca. 0.5 Mio.				
Rated insulation voltage U_i (pollution degree 3)			V	690				
Permissible ambient temperature		for operation in storage	°C °C	–25 to +60 –55 to +80				
Degree of protection in acc. with IEC 60 947-1 and DIN 40 050				front: IP20 terminal space: IP20	front: IP20 terminal space: IP00			
Short-circuit of contactors without overload relays								
Main Circuit								
Fuse-links, performance class gL/gG NH type 3NA, DIAZED type 5SB, NEOZED type 5SE – according to IEC 60 947-4/ EN 60 947-4 (VDE 0660 part 102)		Coord. type 1 [1])	A	35	63	160	250	250
		Coord. type 2 [1])	A	20	25/35	63	125	160
		weld-free [2])	A	10	16	50	63	100
Contactor	Frame size Type			**S00** **3RT13 16/17**	**S0** **3RT13 25/26**	**S2** **3RT13 36**	**S3** **3RT13 44**	**S3** **3RT13 46**
Control								
Operating range of the magnet coils		AC	at 50 Hz:	0.8 - 1.1 x U_s	AC/DC: 0.8 - 1.1 x U_s			
			at 60 Hz:	0.85 - 1.1 x U_s				
		DC	at +50 °C:	0.8 - 1.1 x U_s				
			at +60 °C:	0.85 - 1.1 x U_s				

Power input of the magnet coils (coil in cold state and at 1.0 x Us)									
AC operation		Hz	50/60	50	50/60	50	50/60	50	50/60
	Making capacity	VA	26.5/24.3	61	64/63	145	170/155	270	298/274
	cos φ		0.79/0.75	0.82	0.82 0.74	0.79	0.76/0.72	0.68	0.72/0.62
	Holding power	VA	4.4/3.4	7.8	8.4/ 6.8	12.5	15/11.8	22	27/ 20
	cos φ		0.27/0.27	0.24	0.24/0.28	0.36	0.35/0.38	0.27	0.29/0.31
DC operation	Making capacity = Holding power	W	3.3	5.6		13.3		15	

1) Corresponds to section from IEC 60 947-4 (VDE 0660 Part 102):
Coord. type 1:
The destruction of the contactor and the overload relay is permissible. The contactor and/or overload relay must be replaced, if necessary.
Coord. type 2:
The overload relay must not be damaged. Contact welding on the contactor is permissible, if it can be easily separated again from the contactor.
2) Test conditions in acc. with IEC 60 947-4-1.

3RT13 contactors 4-pole (4 NO) for switching of resistive loads

Contactor	Frame size Type			S00 3RT13 16	S00 3RT13 17	S0 3RT13 25	S0 3RT13 26	S2 3RT13 36	S3 3RT13 44	S3 3RT13 46
Main Circuit										
Current carrying capacity with alternating current										
Utilization category AC-1, switching of resistive loads										
Rated operational currents I_e	(at 40 °C)	to 690 V	A	18	22	35	40	60	110	140
	(at 60 °C)	to 690 V	A	16	20	30	35	55	100	120
Rated power of three-phase loads		at 230 V	kW	7	8.5	12.5	15	23	42	53
cos φ = 0.95 (at 40 °C)		400 V	kW	12	14.5	22	26	39	72	92
Minimum conductor cross-section loaded with I_e		at 40 °C and 60 °C	mm^2	2.5	2.5	10	10	16	50	50
Utilization category AC-2 and AC-3										
Rated operational currents I_e	(at 60 °C)	at 400 V	A	9	12	17	25	26		
Rated power of slip-ring or		at 230 V	kW	3	3	4	5.5	5.5		
squirrel-cage motors at 50 Hz and 60 Hz		400 V	kW	4	5.5	7.5	11	11		

Contactor	Frame size Type			S00 3RT13 16				S00 3RT13 17				S0 3RT13 25/26			
Load ratings with DC															
Utilization category DC-1, switching of resistive loads (L/R ≤ 1 ms)															
Rated operational currents I_e (at 40 °C)															
	Number of conducting paths in series connection			1	2	3	4	1	2	3	4	1	2	3	4
		to 24 V	A	18	18	18	18	22	22	22	22	35	35	35	35
		60 V	A	18	18	18	18	22	22	22	22	20	35	35	35
		110 V	A	2.1	12	18	18	2.1	12	22	22	4.5	35	35	35
		220 V	A	0.8	1.6	18	18	0.8	1.6	22	22	1	5	35	35
		440 V	A	0.6	0.8	1.3	1.3	0.6	0.8	1.3	1.3	0.4	1	2.9	2.9
Utilization category DC-3 and DC-5 shunt and series motors (L/R ≤ 15 ms)															
Rated operational currents I_e (at 40 °C)															
	Number of conducting paths in series connection			1	2	3	4	1	2	3	4	1	2	3	4
		to 24 V	A	18	18	18	18	20	20	20	20	20	35	35	35
		60 V	A	0.5	5	18	18	0.5	5	20	20	5	35	35	35
		110 V	A	0.15	0.35	18	18	0.15	0.35	20	20	2.5	15	35	35
		220 V	A	—	—	1.5	1.5	—	—	1.5	1.5	1	3	10	35
		440 V	A	—	—	0.2	0.2	—	—	0.2	0.2	0.09	0.27	0.6	0.6

Contactor	Frame size Type			S2 3RT13 36				S3 3RT13 44				S3 3RT13 46			
Load ratings with DC															
Utilization category DC-1, switching of resistive loads (L/R ≤ 1 ms)															
Rated operational currents I_e (at 40 °C)															
	Number of conducting paths in series connection			1	2	3	4	1	2	3	4	1	2	3	4
		to 24 V	A	50	50	50	50	70	70	70	70	80	80	80	80
		60 V	A	23	45	45	45	23	70	70	70	60	80	80	80
		110 V	A	4.5	45	45	45	4.5	70	70	70	9	80	80	80
		220 V	A	1	5	45	45	1	5	70	70	2	10	80	80
		440 V	A	0.4	1	2.9	2.9	0.4	1	2.9	2.9	0.6	1.8	4.5	4.5
Utilization category DC-3 and DC-5 shunt and series motors (L/R ≤ 15 ms)															
Rated operational currents I_e (at 40 °C)															
	Number of conducting paths in series connection			1	2	3	4	1	2	3	4	1	2	3	4
		to 24 V	A	20	45	45	45	20	70	70	70	20	80	80	80
		60 V	A	6	45	45	45	6	70	70	70	6.5	80	80	80
		110 V	A	2.5	25	45	45	2.5	70	70	70	2.5	80	80	80
		220 V	A	1	5	25	45	1	7	35	70	1	7	35	80
		440 V	A	0.1	0.27	0.6	0.6	0.15	0.42	0.8	0.8	0.15	0.42	0.8	0.8

3RT15 contactors 4-pole (2 NO + 2 NC main contacts)

Contactor	Frame size Type			S00 3RT15 16/17	S0 3RT15 26	S0 3RT15 26	S2 3RT15 35	S2 3RT15 35
General data								
Mechanical life		Operating cycles		30 Mio.	10 Mio.	10 Mio.	10 Mio.	10 Mio.
Service life at I_e/AC-1		Operating cycles		ca. 0.5 Mio.				
Rated insulation voltage U_i (pollution degree 3)			V	690				
Permissible ambient temperature		for operation in storage	°C °C	–25 to +60 –55 to +80				
Degree of protection in acc. with IEC 60 947-1 and DIN 40 050				front: IP20 terminal space: IP20	front: IP20 terminal space: IP00			
Short-circuit protection for contactors without overload relay								
Main Circuit								
Fuse-links, performance class gL/gG NH type 3NA, DIAZED type 5SB, NEOZED type 5SE – according to IEC 60 947-4/ EN 60 947-4 (VDE 0660 part 102)								
		Coord. type 1 [1])	A	35	63	63	160	160
		Coord. type 2 [1])	A	20	35	35	80	80
		weld-free [2])	A	10	16	16	50	50
Contactor	Frame size Type			S00 3RT15 16/17	S0 3RT15 26	S0 3RT15 26	S2 3RT15 35	S2 3RT15 35
Control								
Operating range of the magnet coils		AC at 50 Hz: AC at 60 Hz: DC at +50 °C DC at +60 °C		0.8 to 1.1 x U_s 0.85 to 1.1 x U_s 0.8 to 1.1 x U_s 0.85 to 1.1 x U_s	AC/DC: 0.8 to 1.1 x U_s	AC/DC: 0.8 to 1.1 x U_s		
Power input of the magnet coils (coil in cold state and at 1.0 x Us)								
AC operation			Hz	50/60	50	50/60	50	50/60
	Making capacity cos φ		VA	26.5/24.3 0.79/ 0.75	61 0.82	64/63 0.82/0.74	145 0.79	170/155 0.76/0.72
	Holding power cos φ		VA	4.4/ 3.4 0.27/0.27	7.8 0.24	8.4/6.8 0.24/0.28	12.5 0.36	15/11.8 0.35/0.38
DC operation	Making capacity = Holding power		W	3.3	5.6	5.6	13.3	13.3

1) Corresponds to section from IEC 60 947-4 (VDE 0660 Part 102):
Coord. type 1:
The destruction of the contactor and the overload relay is permissible. The contactor and/or overload relay must be replaced, if necessary.

Coord. type 2:
The overload relay must not be damaged. Contact welding on the contactor is permissible, if it can be easily separated again from the contactor.

2) Test conditions in acc. with IEC 60 947-4-1.

3RT15 contactors 4-pole (2 NO + 2 NC main contacts)

Contactor	Frame size Type			S00 3RT15 16		S00 3RT15 17		S0 3RT15 26		S2 3RT15 35	
Main Circuit											
Current carrying capacity with alternating current											
Utilization category AC-1, switching of resistive loads											
Rated operational currents I_e (at 40 °C)	to 690 V	A		18		22		40		55	
(at 60 °C)	to 690 V	A		16		20		35		50	
Rated power of three-phase loads cos φ = 0.95 (at 40 °C)	at 230 V	kW		6.5		7.5		15		20	
	400 V	kW		11		13		26		36	
Minimum conductor cross-section loaded with I_e	at 40 °C and 60 °C	mm^2		2.5		2.5		10		16	
Utilization category AC-2 and AC-3											
Rated operational currents I_e (at 60 °C)	to 400 V	A		9		12		25 [1])		40	
Rated operation for motors with slip-ring or squirrel-cage rotor at 50 Hz and 60 Hz and	at 230 V	kW		3		3		5.5		9.5	
	400 V	kW		4		5.5		11		18.5	
Load ratings with DC											
Utilization category DC-1, switching of resistive loads (L/R ≤ 1 ms)											
Rated operational current I_e (at 60 °C)											
Number of conducting paths in series connection			1	2	1	2	1	2	1	2
	to 24 V	A	16	16	20	20	35	35	50	50
	60 V	A	16	16	20	20	20	35	23	45
	110 V	A	2.1	12	2.1	12	4.5	35	4.5	45
	220 V	A	0.8	1.6	0.8	1.6	1	5	1	5
	440 V	A	0.6	0.8	0.6	0.8	0.4	1	0.4	1
Utilization category DC-3 and DC-5 [2]), shunt and series motors (L/R ≤ 15 ms)										
Rated operational current I_e (at 60 °C)										
Number of conducting paths in series connection			1	2	1	2	1	2	1	2
	to 24 V	A	16	16	20	20	20	35	35	50
	60 V	A	0.5	5	0.5	5	5	35	6	45
	110 V	A	0.15	0.35	0.15	0.35	2.5	15	2.5	25
	220 V	A	0.75	1.5	0.75	1.5	1	3	1	5
	440 V	A	—	—	—	—	0.09	0.27	0.1	0.27

1) with AC-coil: 25 A
DC-coil: 20 A.

2) For U_s > 24 V the rated operational currents I_e for the NC contact conducting paths are 50 % of the values for the NO contact conducting paths.

3RT16 capacitor-switching contactors

The technical specifications for frame size S0 correspond, unless listed below, to those of the 3RT10 26 contactors, for frame size 2 to those of the 3RT10 36 contactors, and for frame size S3 to those of the 3RT10 45 contactors.

Contactor	Frame size Type		**S00** **3RT16 17**	**S0** **3RT16 27**	**S3** **3RT16 47**
Capacitor power at operating voltage (Utilization category AC-6b)	230 V 50/60 Hz	kvar	3.0 to 7.5	3.5 to 15	3.5 to 30
	400 V 50/60 Hz	**kvar**	**5.0 to 12.5**	**6.0 to 25**	**5.0 to 50**
	525 V 50/60 Hz	kvar	7.5 to 15	7.8 to 30	7.5 to 60
	690 V 50/60 Hz	kvar	10.0 to 21	10.0 to 42	10.0 to 84
Auxiliary contacts attached (freely available)			1 NO + 1 NC	1 NO	
Additional auxiliary contacts that can be attached (lateral)			—		
Operating range of the magnet coil			0.8 to 1.1 x U_s	0.85 to 1.1 x U_s	
Max. operating frequency		1/h	180	100	
Service life		Operating cycles	> 150 000	> 100 000	
Ambient temperature		°C	60		60
Regulations			IEC 60 947/EN 60 947 (VDE 0660)		
Short-circuit protection			1.6 to 2.2 x I_e		

3RT10 contactors with electronic control module

Contactor		**S0** **3RT10 2.**	**S2** **3RT10 3.**	**S3** **3RT10 4.**
Magnetic coil operational range		0.7 to 1.25 x U_S		
Power input of the magnet coils with coil in cold state and 1.0 x U_S Making capacity = Holding power	W	6	15	19
Upright mounting		on request		

All data not shown corresponds to the standard contactors.

3RT10 coupling relays (Interface)

The technical specifications correspond to those of the 3RT10 contactors used to switch motors, unless listed below.
Auxiliary switch blocks cannot be added to 3RT10 1. coupling relays.
Two, 1-pole auxiliary switch blocks can be built on to the 3RT10 2. coupling relays.

Contactor	Frame size Type			**S00** **3RT10 1.-1HB4.**	**S00** **3RT10 1.-1JB4.**	**S00** **3RT10 1.-1KB4.**	**S0** **3RT10 2.-1KB40**
Mechanical life			Operating cycles	30 Mio.	30 Mio.	30 Mio.	10 Mio.
Operating range of the magnet coils				0.7 to 1.25 x U_s (17 V to 30 V)			
Operating range of the magnet coil							
(with coil in cold state)		at U_s 17 V	W	1.2	1.2	1.2	2.1
		24 V	W	2.3	2.3	2.3	4.2
Making capacity = Holding power		30 V	W	3.6	3.6	3.6	6.6
Permissible residual current of the electronic components (at 0 signal)			mA	< 10 mA x $\left(\frac{24\ V}{U_s}\right)$	< 10 mA x $\left(\frac{24\ V}{U_s}\right)$	< 10 mA x $\left(\frac{24\ V}{U_s}\right)$	< 6 mA x $\left(\frac{24\ V}{U_s}\right)$
Suppressor circuit of the magnet coil				without surge suppression	with Diode	with Varistor	with Varistor
Operating time of the coupling relays							
Making	at 17 V	On delay	NO ms	40 to 120	40 to 120	40 to 120	93 to 270
		Off delay	NC ms	30 to 70	30 to 70	30 to 70	83 to 250
	at 24 V	On delay	NO ms	30 to 60	30 to 60	30 to 60	64 to 87
		Off delay	NC ms	20 to 40	20 to 40	20 to 40	55 to 78
	at 30 V	On delay	NO ms	20 to 50	20 to 50	20 to 50	53 to 64
		Off delay	NC ms	15 to 30	15 to 30	15 to 30	45 to 56
Breaking	at 17 V to 30 V	On delay	NO ms	7 to 17	40 to 60	7 to 17	18 to 19
		Off delay	NC ms	22 to 30	60 to 70	22 to 30	24 to 25
Safe isolation between coil and main contacts (acc. to DIN VDE 0106 Part 101 and A1 [draft 2/89])			V	400	400	400	400

The technical specifications correspond to those of the 3RT10 contactors used to switch motors, unless listed below.
Auxiliary switch blocks cannot be added to 3RT10 1. contactor relays.
Operating range of the magnet coils **1.4 W** at 24 V.

Contactor	Frame size Type			**S00** **3RT10 1.-1MB4.-0KT0**	**S00** **3RT10 1.-1VB4.**	**S00** **3RT10 1.-1WB4.**
Mechanical life		Operating cycles		30 Mio.	30 Mio.	30 Mio.
Operating range of the magnet coils				0.85 to 1.85 x U_s		
Power input of the magnet coils						
(with coil in cold state)	at U_s 24 V	W		1.4	1.4	1.4
Making capacity = Holding power						
Suppressor circuit of the magnet coil				without surge suppression	with Diode	with Varistor
Safe isolation between coil and main contacts (acc. to DIN VDE 0106 Part 101 and A1 [draft 2/89])						
Permissible residual current of the electronic components (at 0 signal)				on request		

Operating time of the coupling relays - Catalog data (1.4 W)

U_C [V]					**3RT1015-1MB42-0KT0** without protective element		**3RT1015-1MB42-0KT0** Diode		**3RT1015-1MB42-0KT0** Varistor	
					from	to	from	to	from	to
Making	at 20.5 V	Pull-in	NO	ms			40	130		
		Drop-out	NC	ms			40	125		
	at 24 V	Pull-in	NO	ms			40	100		
		Drop-out	NC	ms			30	90		
	at 44 V	Pull-in	NO	ms			20	30		
		Drop-out	NC	ms			15	25		
	at 20.5 to 44 V	Pull-in	NO	ms	9	12	45	65	10	15
Breaking		Drop-out	NC	ms	12	16	52	72	15	20

Accessories for 3RT1. contactors

			Solid-state time relay blocks with semiconductor output 3RT19 .6- 2C 2D	Time-delayed auxiliary switch blocks 3RT19 .6- 2E 2F 2G
Rated insulation voltage		AC V	250	250
Pollution degree 3 Overvoltage category III in acc. with DIN VDE 0110				
Energizing operating range			0.8 to 1.1 x U_s 0.95 to 1.05 times the rated frequency	0.85 to 1.1 x U_s 0.95 to 1.05 times the rated frequency
Rated power		W	1	2
Power input at 230 V AC, 50 Hz		VA	1	4
Rated operational currents I_e				
AC-140, DC-13		A	0.3 at 3RT19 16 0.5 at 3RT19 26	— —
AC-15 at 230 V AC, 50 Hz		A	—	3
DC-13 at 24 V		A	—	1
DC-13 at 110 V		A	—	0.2
DC-13 at 230 V		A	—	0.1
DIAZED fusing				
Performance class	gL/gG	A	—	4
Operating frequency				
Loaded with I_e 230 V AC		1/h	2500	2500
Loaded with 3RT10 16 contactor, 230 V AC		1/h	2500	5000
Recovery time		ms	50	150
Minimum on-time		ms	35	200 (off delay)
Residual current		mA	≤ 5	—
Voltage drop		V	≤ 3.5	—
in switched state				
Short-term current carrying capacity		A	10 (to 10 ms)	—
Setting accuracy in relation to the value at the end of the scale			≤ ± 15 %	≤ ± 15 %
Repeatability			≤ ± 1 %	≤ ± 1 %
Mechanical life	Operating cycles		100 x 10^6	30 x 10^6
Permissible ambient temperature	for operation in storage	°C °C	–25 to +60 –40 to +85	–25 to +60 –40 to +85
Degree of protection in acc. with EN 60 529			IP20 terminals	IP20 terminals
Terminal type	Single-core	mm^2	2 x (0.5 to 1.5) 2 x (0.75 to 4)	2 x (0.5 to 1.5) 2 x (0.75 to 4)
	Finely stranded with wire end ferrule:	mm^2	2 x (0.5 to 2.5)	2 x (0.5 to 2.5)
	Single or multi-core	AWG	2 x (18 to 14)	2 x (18 to 14)
Terminal screw			M3	M3
Tightening torque		Nm	0.8 to 1.2	0.8 to 1.2
Permissible installation			any	any
Shock resistance Half sine according to IEC 60 068-2-27		*g*/ms	15/11	15/11
Vibration performance according to IEC 60 068-2-6		Hz/mm	10 to 55/0.35	10 to 55/0.35
EMC-Testing			EN 50081-1; IEC 61 000-6-2	EN 50081-1; IEC 61 000-6-2
Overvoltage protection			Varistor integrated in timing relay	—

3RA13 reversing contactor combinations

The technical information corresponds to that of the 3RT10 ... contactors.
The ⓒ and Ⓤ approvals only apply to complete contactor combinations and not to combinations you have put together from separate parts.

3RA14 combinations for wye-delta starting

The technical specifications correspond to those of the 3RT individual contactor and the 3RU time relay, unless listed below.

Starter	Frame sizes Type	**S.. - S.. - S..** **3RA.. ..**		**00-00-00** **14 15**	**00-00-00** **14 16**	**0-0-0** **14 23**	**0-0-0** **14 25**	**2-2-0** **14 34**	**2-2-2** **14 35**	**2-2-2** **14 36**	**3-3-2** **14 44**	**3-3-2** **14 45**
Mechanical life			Operating cycles	3 Mio.								
Short-circuit protection without overload relay				Short-circuit protection with overload relay see section 4.								
Maximum rated current of the fuse												
Main Circuit[1])												
Fuse-links, performance class gL/gG NH type 3NA, DIAZED type 5SB, NEOZED type 5SE												
Single or double infeed												
–according to IEC 60 947-4-1/	Coord. type 1 [1])		A	35	35	63	100	125	125	160	250	250
DIN VDE 0660 part 102	Coord. type 2 [1])		A	20	20	25	35	63	63	80	125	160
Control circuit												
Fuse-links, performance class gL/gG DIAZED type 5SB, NEOZED type 5SE			A	10,								
(Short-circuit current $I_k \geq 1$ kA)			A	6[2]), if the auxiliary contact of the overload relay is in the circuit of the contactor coil.								
Miniature circuit breaker with C characteristic			A	10,								
			A	6[2]), if the auxiliary contact of the overload relay is in the circuit of the contactor coil								
Size of the individual contactors	Line contactor K1		type 3RT	10 15	10 17	10 24	10 26	10 34	10 35	10 36	10 44	10 45
	Delta contactor K3		type 3RT	10 15	10 17	10 24	10 26	10 34	10 35	10 36	10 44	10 45
	Wye contactor K2		type 3RT	10 15	10 15	10 24	10 24	10 26	10 34	10 34	10 35	10 36
Unassigned auxiliary contacts of the individual contactors	see circuit diagrams of the control circuit on page 3/93.											
Load ratings utilization category AC-3 **Switch-over time up to 10 s**												
Rated operational current		at 400 V	A	12	17	25	40	65	80	86	115	150
		500 V	A	8.7	11.3	20.8	31.2	55.4	69.3	86	112.6	138.6
		690 V	A	6.9	9	20.8	22.5	53.7	69.3	69.3	98.7	138.6
Rated power		at 230 V	kW	3.3	4.7	7.2	12	20.4	25.5	27.8	37	49
of three phase motors		400 V	kW	5.8	8.2	12.5	21	35	44	48	65	85
at 50 Hz and		500 V	kW	5.3	6.9	13	20.5	38	48	60	80	98
		690 V	kW	5.8	7.5	18	20.4	51	66	67	97	136
		1000 V	kW	—	—	—	—	—	—	—	—	—
Operating frequency with overload relay			1/h	15	15	15	15	15	15	15	15	15
Load ratings utilization category AC-3 **Switch-over time up to 15 s**												
Rated operational current		at 400 V	A	12	17	25	31	44	57	67	97	106
		500 V	A	8.7	11.3	20.8	31	44	57	67	97	106
		690 V	A	6.9	9	20.8	22.5	44	57	67	97	106
Rated power		at 230 V	kW	3.3	4.7	7.2	9.4	13.8	18.2	21.6	32	35
		400 V	kW	5.8	8.2	12.5	16.3	24	31.6	38	55	60
of three phase motors		500 V	kW	5.3	6.9	13	20.4	30	40	47	69	75
at 50 Hz and		690 V	kW	5.8	7.5	18	20.4	42	55	65	95	104
		1000 V	kW	—	—	—	—	—	—	—	—	—
Operating frequency with overload relay			1/h	15	15	15	15	15	15	15	15	15

3RA14 combinations for wye-delta starting

Starter	Frame sizes Type	**S.. - S.. - S..** **3RA.. ..**		**00-00-00** **14 15**	**00-00-00** **14 16**	**0-0-0** **14 23**	**0-0-0** **14 25**	**2-2-0** **14 34**	**2-2-2** **14 35**	**2-2-2** **14 36**	**3-3-2** **14 44**	**3-3-2** **14 45**
Load ratings utilization category AC-3 **Switch-over time up to 20 s**												
Rated operational current		at 400 V	A	12	17	25	28	39	51	57	85	92
		500 V	A	8.7	11.3	20.8	28	39	51	57	85	92
		690 V	A	6.9	9	20.8	22.5	39	51	57	85	92
Rated power		at 230 V	kW	3.3	4.7	7.2	8.5	12.2	16.3	18.4	28	30
of three phase motors		400 V	kW	5.8	8.2	12.5	14.7	21.3	28	32	48	52
at 50 Hz and		500 V	kW	5.3	6.9	13	18.4	26.7	35	40	60	65
		690 V	kW	5.8	7.5	18	20.4	37	49	55	83	90
		1000 V	kW	—	—	—	—	—	—	—	—	—
Operating frequency with overload relay			1/h	15	15	15	15	15	15	15	15	15

1) Corresponds to IEC 60 947-4 (VDE 0660 Part 102):
Coord. type 1:
The destruction of the contactor and the overload relay is permissible. The contactor and/or overload relay must be replaced, if necessary.

Coord. type 2:
The overload relay must not be damaged. Contact welding on the contactor is permissible, if it can be easily separated again from the contactor.

2) to $I_k \leq 0.5$ kA; ≤ 260 V.

3RU11, 3RB10, 3RB12 Overload relays

4

Section	Subject	Page
4.1	**Specifications/regulations/approvals**	**4-2**
4.2	**Device description**	**4-4**
4.2.1	Overview	4-4
4.2.2	Detailed device description	4-5
4.3	**Application and use**	**4-10**
4.3.1	Overload relay in the motor circuit	4-10
4.3.2	3RU11 thermal overload relays and 3RB10 electronic overload relays	4-15
4.3.3	3RB12 electronic overload relays	4-22
4.4	**Accessories**	**4-30**
4.4.1	Electrical remote RESET	4-30
4.4.2	Mechanical thru-the-door reset	4-31
4.4.3	Other accessories	4-33
4.5	**Mounting and connection**	**4-34**
4.5.1	Mounting	4-34
4.5.2	Connection	4-41
4.5.3	Circuit diagrams	4-43
4.6	**Dimensional drawings (dimensions in mm)**	**4-46**
4.7	**Technical Data**	**4-49**
4.7.1	3RU11 thermal overload relays	4-49
4.7.2	3RB10 electronic overload relays	4-54
4.7.3	3RB12 electronic overload relays	4-61
4.7.4	Terminal bracket for stand-alone installation	4-66

4.1 Specifications/regulations/approvals

Standards

- The 3RU11 thermal overload relays and the 3RB10 and 3RB12 electronic overload relays comply with the following standards:
  IEC 60947-1/DIN VDE 0660 Part 100
  IEC 60947-4-1/DIN VDE 0660 Part 102
  IEC 60947-5-1/DIN VDE 0660 Part 200
  IEC 60801-2, -3, -4, -5; UL 508/CSA C 22.2.
- The 3RB10 and 3RB12 electronic overload relays also comply with the EMC standards. This standard isn't relevant for the 3RU11 thermal overload relays.

Approvals/test reports

Confirmation of approvals, test certificates, and characteristics can be obtained under
https://support.industry.siemens.com/cs/ww/en/ps/16027

Tripping classes

The tripping classes describe time intervals within which the overload relays have to trip from a cold state at 7.2 times the set current in the case of a symmetrical, three-pole load. The following table shows the tripping times in relationship to the tripping classes in accordance with the IEC 60947-4-1 standard:

Tripping class	Tripping time t_A in sec. at 7.2 x I_e from a cold state
10 A	$2 < t_A \leq 10$
10	$4 < t_A \leq 10$
20	$6 < t_A \leq 20$
30	$9 < t_A \leq 30$

Table 4-1: Tripping classes/Tripping time

The tripping classes that the 3RU11, 3RB10 and 3RB12 overload relays are available in, can be found in section 4.2.

Time-delayed overload releases

The following table contains the operating limits of time-delayed overload releases in the case of an all-pole load:

Overload release type	Multiple of the set current				Reference ambient temperature
	A	B	C	D	
Ambient temperature compensated	1.05	1.2	1.5	7.2	+20 °C
	Not tripped < 2 h	Tripped < 2 h	Tripped < 4 min.	Tripped from a cold state in 4 to 10 sec.	
			CLASS 10		
	< 2 h	< 2 h	< 8 min.	6 to 20 sec.	
			CLASS 20		

Table 4-2: Operating limits of time-delayed overload releases in the case of an all-pole load

Resistance to extreme climates

The 3RU11, 3RB10, and 3RB12 overload relays are climate-proof in acc. with IEC 721.

Shock protection

The 3RU11, 3RB10, and 3RB12 overload relays are shockproof in acc. with DIN VDE 0106 Part 100.
Depending on the attachment to other devices, extended terminal covers are to be attached to the connecting bars.

Ships' systems

The 3RU11, 3RB10, and 3RB12 overload relays are suitable for use on ships. The overload relays have been submitted to:

- GL (Germany)
- LRS (Great Britain)
- DNV (Norway)

Explosion-proof motors

The 3RU11 thermal overload relays and the 3RB10 and 3RB12 electronic overload relays comply with the regulations for the overload protection of explosion-proof motors of "increased safety" protection types (EEx d and EEx e) in acc. with EN 50 019/DIN VDE 0165 and DIN VDE 0170/0171:

The numbers of the individual test reports as well as individual notes on the application of overload relays are in Section 4.3 "Application and use".

4.2 Device description

4.2.1 Overview

Protection function

Overload relays are used for current dependent protection of electrical equipment (for example motors) against overheating. Overheating can be caused by overload, asymmetrical current consumption, phase loss in the power network, or locked rotor. With Overload, phase imbalance, phase loss or locked rotor there is an increase in the motor current that is well above the set rated motor current. This increase in current, that over a longer period of time can damage or even destroy the equipment, is monitored and evaluated by the overload relay. There are two function principles for overload relay protection available: thermal and electronic.

Function principles

With Thermal overload relays (see overload relay 3RU11) an increase in current heats up the bimetal strips inside the device by means of heating elements. The strips then bend and activate auxiliary contacts by means of a tripping mechanism.
With an electronic overload relay (see overload relays 3RB10 and 3RB12) the current increase is measured by an integrated current transformer then evaluated by the corresponding electronics, which then send an impulse to the auxiliary contacts.
The auxiliary contact shuts down the contactor and therefore the load. The switching time is dependent on the relationship of tripping current to the set current and can be found in the form of long stability tripping characteristic curves (see section 4.3 "Application and use").

Product offering

There are 3 overload relay families available:

3RU11 thermal overload relays
The 3RU11 thermal overload relays, from 0.11 A to 100 A, are designed for current dependent protection of loads with normal starting (tripping class CLASS 10).

3RB10 electronic overload relays
The self-powered 3RB10 electronic overload relays, from 0.1 A to 630 A, are designed for current dependent protection of loads with normal and heavy starting (tripping classes CLASS 10 and CLASS 20).

3RB12 electronic overload relays
The externally powered 3RB12 electronic overload relays, from 0.25 A to 820 A are designed for current dependent protection of loads with normal and heavy starting (tripping classes CLASS 5, 10, 15, 20, 25 and 30, adjustable on the device).
In addition to current dependent protection of loads against non-permissible overheating, the 3RB12 electronic overload relay also offers the possibility for temperature monitoring of the motor windings by use of a thermistor (PTC) sensor circuit. The load can also be protected against excess temperature that, for example, could appear indirectly due to blocked coolant flow and therefore could not be measured by current dependent means.

Furthermore the 3RB12 electronic overload relay offers the possibility to protect the installation against the results of a ground fault with its internal/ external ground fault monitoring.

4.2.2 Detailed device description

Description

3RU11 thermal overload relays
The 3RU11 thermal overload relays from 0.11 A to 100 A are available with tripping class CLASS 10 and offer current dependent protection of loads with normal starting at a low price. This is an economical protection device, especially in the lower ratings range.

3RB10 electronic overload relays
The self-powered 3RB10 electronic overload relays from 0.1 A to 630 A are available with tripping classes CLASS 10 and CLASS 20. With these two tripping classes they offer optimal current dependent protection of loads with normal- and heavy starting.
The 3RB10 electronic overload relay is similar to the 3RU11 thermal overload relay in dimensions, in operational control and in the way they mount to contactors. That way the thermal overload relay can be easily substituted by the electronic version, when the application requires phase loss trip within 3 seconds, a wide current adjustment range (1 : 4) or also lower heat generation.
The accessories for the thermal and electronic devices are identical.

3RB12 electronic overload relays
The 3RB12 electronic overload relays from 0.25 A to 820 A with external power supply are suitable for normal starting and heavy starting with the adjustable setting of the variable tripping classes CLASS 5 to CLASS 30. In addition to the adjustable variable tripping classes, the 3RB12 electronic overload relay offers a large number of additional built-in features and protection functions: overload warning, thermistor-motor protection-function, ground fault detection, self-monitoring, status indicator by means of LEDs, and analog output. More detailed information about the built-in features and functions in section 4.3 "Application and use".

Features/customer benefits

The following table provides an overview of the features and resulting benefits of the three overload relay families:

Feature	Customer benefits	3RU11	3RB10	3RB12
Protection functions				
Tripping due to an overload	• guarantees an optimal current dependent protection of the load against non-permissible overheating as a result of an overload.	x	x	x
Tripping due to phase imbalance	• guarantees an optimal current dependent protection of the load against non-permissible overheating as a result of phase imbalance.	x	x	x
Tripping due to phase loss	• minimizes the heating of the three-phase motor during single-phase operation [1]).	x	x[2])	x
Tripping due to excessive temperature by **integrated thermistor motor protection function**	• permits optimal temperature-dependent protection of loads against impermissibly high temperature rises, e. g. for stator-critical motors, reduced coolant flow, pollution of the motor surface or long starting and breaking procedures • saves an additional unit • saves space in the switchgear cabinet • reduces wiring complexity and costs	[3])	[3])	x
Tripping due to an earth fault by **internal [4]) or external earth fault monitoring**	• permits optimal protection of the load in the case of minor short-circuits or earth faults caused by damage to insulation, humidity, condensation, etc. • eliminates additional unit • saves space in the switchgear cabinet • reduces wiring complexity and costs			x
Features				
RESET function	• allows manual or automatic resetting of the relay.	x	x	x
TEST function	• permits easy checking of correct functioning and the wiring.	x	x	x
Status display	• signals the current operational state.	x	x	x
Large current setting knob	• makes it easier to set the relay accurately to the right current value.	x	x	x
Integrated auxiliary contacts (1 NO + 1 NC)	• allow the load to be disconnected in the case of a disturbance • enable tripped signals to be output.	x	x	x
Design of load feeders				
Short-circuit strength up to 100 kA at 690 V (in combination with the appropriate fuse or circuit-breaker)	• guarantees optimum protection of the load and the operating personnel in the event of short-circuits caused by insulation breakdown or faulty switching operations.	x	x	x
Electrical and mechanical compatibility with the 3RT1 contactors	• simplifies project planning • reduces the project engineering work and costs • permits space-saving direct mounting apart from individual mounting.	x	x	x[5])
Straight-through current transformer (the leads are directly routed short-circuit-proof to the main terminals of the contactor through the feed-through openings of the overload relay)	• reduces the contact resistances (only one contact point) • saves connection costs (quick, easy and no tools required) • saves material costs (no need for busbars) • reduces installation costs.		only 3RB10 56-.FW0	only 3RB12 46-....

1) Single-phase operation: Abnormal operating state of a three-phase induction motor in which a phase is interrupted.

2) Tripping from warm state within 3 seconds

3) In combination with the 3RN thermistor motor protection devices, additional temperature-based protection can be implemented.

4) Special device variants: See selection and ordering data.

5) Exception: For 3RB12 46, only individual mounting

Feature	Customer benefits	3RU11	3RB10	3RB12
Further characteristics				
Temperature compensation	• allows implementation of the relay at high temperatures without derating • prevents premature tripping • permits compact design of the switchgear cabinet without the need for clearance between the devices and/or load feeders • simplifies project planning • allows space to be saved in the switchgear cabinet.	x	x	x
High long-term stability	• guarantees reliable protection of loads even after years of operation under harsh conditions.	x	x	x
Wide current adjustment ranges	• reduce the number of variants • minimize the project engineering work and costs • provide savings in inventories in terms of work, costs and capital tie-up.		x	x
Trip classes > CLASS 10	• permit solutions for heavy starting and extremely heavy starting.		x	x
Minimal power losses	• reduce the energy consumption (the energy consumption is up to 95% lower than for thermal overload relays) and therefore the energy costs • minimize the temperature rise for the contactor and switchgear cabinet – which may obviate the need for a cabinet cooling system • allow space to be saved by direct mounting on the contactor and in the case of high motor currents (i. e. heat isolation is not necessary).		x	x
Internal power supply	• saves project engineering and connection of an additional control circuit.	[1])	x	
Variable setting of the trip classes The release class required can be set in accordance with the prevailing start-up conditions by means of a six-position rotary switch (CLASS 5, 10, 15, 20, 25 or 30)	• reduces the number of variants • minimizes the project engineering work and costs • permits savings in inventories in terms of work, costs and capital tie-up.			x
Analog output[2])	• allows an analog output signal to be output to control instruments, PLCs or to bus systems • saves an additional transducer and signal converter • saves space in the switchgear cabinet • reduces wiring complexity and costs			x
Overload warning	• indicates impending tripping of the relay due to an overload, phase unbalance or phase failure directly on the device • enables impending tripping of the relay to be signalled via an external indicator lamp connected to the corresponding auxiliary contacts[2]) • permits early implementation of countermeasures in the case of long-term current-dependent loading of the consumer above the limit current • saves an additional relay • saves space in the switchgear cabinet • reduces wiring complexity and costs			x

1) The SIRIUS 3RU11 thermal overload relays operate according to the bimetal-strip principle and therefore do not require an additional control circuit.

2) Special device variants: See selection and ordering data

Frame sizes/device designs

The following table provides an overview of the 3RU11 thermal overload relay and the 3RB10 electronic overload relay in their available frame sizes. The individual frame sizes are arranged to show the maximum rated current, the lowest and highest adjustable ranges as well as the available tripping classes.

Frame size	**S00**	**S0**	**S2**	**S3**	**S6**	**S10/12**
Device width	45 mm	45 mm	55 mm	70 mm	120 mm	145 mm
3RU11 thermal overload relay						
Base Number	3RU11 16	3RU11 26	3RU11 36	3RU11 46	—	—
Max. Rated current	12 A	25 A	50 A	100 A	—	—
Lowest adjustable range	0.11...0.16 A	1.8...2.5 A	5.5...8 A	18...25 A	—	—
Highest adjustable range	9...12 A	20...25 A	40...50 A	80...100 A	—	—
Tripping class	CLASS 10					
3RB10 electronic overload relay						
Base Number	3RB10 16	3RB10 26	3RB10 36	3RB10 46	3RB10 56	3RB10 66
Max. Rated current	12 A	25 A	50 A	100 A	200 A	630 A
Lowest adjustable range	0.1...0.4 A	0.1...0.4 A	6...25 A	13...50 A	50...200 A	55...250 A
Highest adjustable range	3...12 A	6...25 A	13...50 A	25...100 A	50...200 A	300...630 A
Tripping class	CLASS 10 and CLASS 20					

Table 4-3: Overview of the designs of both the 3RU11 and 3RB10 overload relays

The 3RB12 electronic overload relay comes in four frame sizes. These can be found in the following table. In the table the individual frame sizes are arranged to show the maximum rated current, the lowest and highest adjustable ranges as well as the available tripping classes. Furthermore the various designs are described below.

Base number	3RB12 46	3RB12 53	3RB12 57	3RB12 62
Max. Rated current	100 A	205 A	500 A	820 A
Lowest adjustable range	0.25...6.3 A	50...205 A	125...500 A	200...820 A
Highest adjustable range	25...100 A	50...205 A	125...500 A	200...820 A
Tripping class	CLASS 5, 10, 15, 20, 25 and 30, adjustable			
Designs				
Standard design	Comes with the option to connect a thermistor (PTC) sensor circuit as well as an additional current transformer and two outputs (each 1 NO + 1 NC),that can be used on each model for shut down and alarm for an overload trip, Thermistor trip, ground fault trip and/or a pending overload (overload warning).			
Design with internal ground fault detection	Like the standard design, except with additional internal ground fault detection for the detection of fault currents.			
Design with bistabil output relays	Like the standard design, except with bistabil output relays.			
Design with analog output	Like the standard design, except with additional analog 4...20 mA output signal for the motor current related to motor current setting; for the control of measuring instruments, for processing in management systems, communication using networking systems, indication of overload and motor current.			

Table 4-4: Overview of the 3RB12 electronic overload relay designs

Detailed information

More detailed technical information on overload relays can be found under section 4.7 "Technical data".

4.3 Application and use

4.3.1 Overload relay in the motor circuit

Starter: Contactor + overload relay

The individual overload relay families protect the following loads against the effects of an overload, phase loss and phase imbalance.

For the protection of	3RU11	3RB10	3RB12
Three phase loads	X	X	X
DC loads	X	—	—
Single phase-AC-loads	X	—	X[1])

1) devices without internal ground fault detection.

Important
The protection of the load can't be realized by the overload relay alone. The overload relay only senses the current, evaluates it and switches the auxiliary contacts according to the respective trip curve. The auxiliary contact (95-96, NC) will switch off the connected contactor and therefore the load.

In order to switch the load the following contactors will be needed.
The following table offers an overview regarding the coordination of the overload and contactor with their ratings.

				3RU11 16 3RB10 16	**3RU11 26 3RB10 26**	**3RU11 36 3RB10 36**	**3RU11 46 3RB10 46**	**3RB10 56**	**3RB10 66**	**3RB12 46**	**3RB12 53**	**3RB12 57**	**3RB12 62**
400 V	460 V		max. adjust-able current	12 A	25 A	50 A	100 A	200 A	630 A	100 A	205 A	500 A	820 A
kW	HP	Contactor	Frame size width	S00 45 mm	S0 45 mm	S2 55 mm	S3 70 mm	S6 120 mm	S10/S12 145 mm	70 mm	120 mm	145 mm	230 mm
3 kW	3	3RT10 15	S00	X						①			
4 kW	5	3RT10 16	S00	X						①			
5.5 kW	7.5	3RT10 17	S00	X						①			
	5	3RT10 23			X					①			
5.5 kW	7.5	3RT10 24	S0		X					①			
7.5 kW	10	3RT10 25	S0		X					①			
11 kW	15	3RT10 26	S0		X					①			
	20	3RT10 33				X				①			
15 kW	25	3RT10 34	S2			X				①			
18.5 kW	30	3RT10 35	S2			X				①			
22 kW	40	3RT10 36	S2			X				①			
30 kW	50	3RT10 44	S3				X			①			
37 kW	60	3RT10 45	S3				X			①			
45 kW	75	3RT10 46	S3				X			①			
55 kW	100	3RT10 54	S6					X			X		
75 kW	125	3RT10 55	S6					X			X		
90 kW	150	3RT10 56	S6					X			X		
110 kW	150	3RT10 64	S10						X			X	
132 kW	200	3RT10 65	S10						X			X	
160 kW	250	3RT10 66	S10						X			X	
200 kW	300	3RT10 75	S12						X			X	
250 kW	400	3RT10 76	S12						X			X	
375 kW	500	3TF68	Frame Size 14						X				X
450 kW	700	3TF69	Frame size 14						X				X

Table 4-5: Coordination of the overload relays to the contactors

X = Directly mounted
① = Stand alone installation (device with straight through transformer)
DIN rail mountable on 35-mm DIN rail

Overload relays in wye-delta combinations

When overload relays are used in wye-delta combinations, it must be taken into consideration that only $\frac{1}{\sqrt{3}}$ of the motor current flows through the line contactor. An overload relay built onto the line contactor must be set to this level (i.e. 0.58 of the motor current).
A coordination of the overload relay to the line contactor in 3RA wye-delta combinations can be found in the catalog, chapter 3.

Important
3RB12 electronic overload relays with internal ground fault detection are not suitable for use in wye-delta combinations, since transient current spikes occur at switch-over from wye to delta operation. These can result in the triggering of the ground fault detection.

Short circuit

For short circuit protection, fuses (fused branch circuit) or circuit breaker (fuseless load feeder/combination assembly) must be used. Appropriate short-circuit protection devices for overload relay with contactor are found in section 4.7 "Technical Data".
When selecting from the table, the coordination type needs to be considered.

Coordination type

The coordination types (EN 60947-4-1 (VDE 0660 part 102)) describe the performance characteristics after a short-circuit. They are differentiated in 2 types:

With **coordination type 1** the contactor or starter may not endanger people or installations in the event of a short-circuit and **does not need to be suitable** for further operation (without repair or partial replacement).
With **coordination type 2** the contactor or starter may not endanger people or installations in the event of a short-circuit and **must be suitable** for further operation. There is the danger of welding contacts. In this case, the manufacturer must provide maintenance instructions.

Operation with frequency converters

The 3RU11 thermal overload relays are suitable for use with frequency converters. Depending on the frequency of the converter the trip current must sometimes be adjusted to a higher current than the motor current because of appearing eddy current and Skin effect. The adjusted current settings can be taken from chapter 2 "3RV1 circuit breaker/MSP" under section 2.8 "Application notes for the use of 3RV1 downstream from frequency converters/ inverters with pulsing voltage".
The 3RB10 electronic overload relay and 3RB12 are suitable for frequencies of 50/60 Hz and their related harmonics. That way it's possible to use the 3RB10 and 3RB12 on the line side of a frequency converter.
If there is a need for motor protection on the load side of a frequency converter then we recommend the 3RN thermistor motor protection device or the 3RU11 thermal overload relay.

Normal and heavy starting

When selecting the correct overload relay the ramp-up time needs to be taken into consideration in addition to the rated motor current. The ramp-up time is the time it takes the motor to reach its full load speed. If this time falls under 10 seconds, it's called normal starting.
However, if based on special load requirements (for example, the starting up of large centrifuges), the motor needs a ramp-up time of more than 10 seconds it's called heavy starting. For the protection of heavy starting motors, special overload relays are required with the respective tripping classes (ex.: CLASS 20, CLASS 30). With heavy starting, the wiring and contactors must be specially sized due to the increased thermal loading. The required sizing is taken into consideration in the coordination tables in chapter 4.7 "Technical Data".

Explosion-proof motors

The 3RU11 thermal overload relays comply with the regulations for the overload protection of explosion-proof motors of "increased safety" protection types EEx e IEC 50 019/ DIN VDE 0165, DIN VDE 0170/171.
KEMA-test certificate no. Ex-97.Y.3235
DMT 98 ATEX G001
EN 50 019: 1977 + A1 ... A5,
increased safety "e": Attachment A, Guidelines for the temperature monitoring of squire-cage motors in operation.

The 3RB10 thermal overload relays comply with the regulations for the overload protection of explosion-proof motors of "increased safety" protection types EEx d and EEx e IEC 50 019/DIN VDE 0165, DIN VDE 0170/171 and PTB-Test rules.
PTB-test report no. Nr. 3.43-8803/98 (for S00 to S3)
EG-special test certificate in acc. with directive 94/9/EG:
PTB 01 ATEX 3306 (for S00 to S3)
PTB 01 ATEX 3203 (for S6)
PTB 01 ATEX 3316 (for S10/S12)

The 3RB12 thermal overload relays comply with the regulations for the overload protection of explosion-proof motors of "increased safety" protection types EEx d and EEx e IEC 50 019/DIN VDE 0165, DIN VDE 0170/171 and PTB-Test rules.
In the case of tripping devices with DC operation, electrical isolation must be secured by means of a battery network or a safety transformer in compliance with DIN VDE 0551.
When the 3RB12..-....1 electronic overload relays (no change to the switching state of the auxiliary contact elements in the event of the failure of the control supply voltage) are used to protect EEx d and EEx e motors, separate monitoring of the control supply voltage is recommended.
PTB-test report no. Nr. 3.53-3907/96.
EG-special test certificate in acc. with directive 94/9/EG:
PTB 01 ATEX 3220.

Advantages of load feeders/combination starters with overload relays

The assembly of load feeders/combination starters with overload relays (Fuses+contactor+overload relay or circuit breaker+contactor+overload relay) has the following advantages over the purely fuseless assembly (circuit breaker/MSP+contactor):

- It is easy to distinguish between tripping caused by an overload and tripping caused by a short circuit. In the event of a short circuit, the fuses limit the short-circuit current; in the event of an overload, the overload relay switches off the contactor and thus the motor.
- At voltages > 400 V, fuses have a short-circuit breaking capacity of up to 100 kA. As a result, in 690 V systems, in particular, fused motor feeders are often preferred.
- If automatic RESET is set, the overload relay resets itself automatically after a trip and does not have to be switched on again locally.
- A remote reset can be implemented very easily by means of attachable electrical and mechanical RESET modules for the 3RU11 and 3RB10 overload relays. The electrical remote RESET is already integrated in the 3RB12 multifunction devices.
- Longer ramp-up times can be only accomplished in connection with the 3RB10 and 3RB12 electronic overload relays.
- Wide adjustable setting range of 1:4 are only possible with the 3RB10 and 3RB12 electronic overload relays.
- Combinations of a circuit breaker for starter protection, a contactor, and an overload relay also have the advantage that the feeder can be easily isolated and that, in the event of a short circuit, it is disconnected in three poles.

4.3.2 3RU11 thermal overload relays and 3RB10 electronic overload relays

Functions

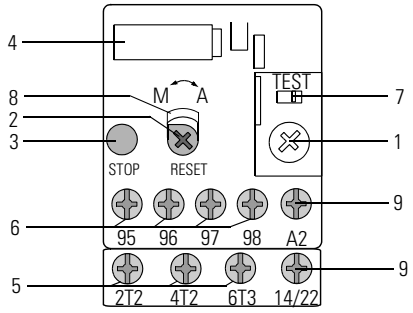

Fig. 4-1: Front view 3RU11
3RB10 is the same as 3RU11 with exception of the integrated sealable cover.

1 Scale for setting the rated current of the load.
2 Reset button (blue):
Press the RESET button to get the relay ready before putting it into operation or after tripping.
3 STOP button (red):
The STOP button opens the normally closed contact, which remains open until the button is released again. The downstream contactor and thus the motor can be switched off.
Press the STOP button to switch the relay off when it is in operation. The normally closed contact of the auxiliary switch opens. The relay remains ready for operation.
4 Device type plate
5 Terminals for three motor supply lines
6 Terminals for normally closed/normally open contacts (95/96 for normally closed contacts, 97/98 for normally open contacts)
7 Contact position indicator/test
The slider for the contact position indicator also serves as a test function. When it is operated, tripping of the overload relay is simulated. The normally closed contact (95/96) opens, and the normally open contact (97/98) closes. The switching position is indicated.
8 Switch for manual/auto RESET:
By pressing and turning the blue button you can select automatic or manual reset.
In the case of the relay setting M (manual RESET), the switching position of the relay is indicated:
I = ready for operation
O = tripped
9 Only in the case of frame size S00:
Terminal A2: repetition terminal of the contactor coil
Terminal 14/22: repetition terminal of the contactor auxiliary contact.

Areas of use

The 3RU11 thermal overload relays are designed for the protection of 3-phase AC, DC and single phase AC loads. If the 3RU11 thermal overload relay is going to protect DC loads or single phase loads, then all bimetal strips must be heated. Therefore, all main current paths of the relay need to be wired in series.
The 3RB10 electronic overload relays are designed for the protection of three phase loads in sine-wave 50/60 Hz voltage networks. The relay is not suitable for protection of DC loads or single phase loads. In loads with single pole loading, the 3RU11 thermal overload relays or the 3RB12 electronic overload relays (only suitable for the protection of single phase loads) can be used.

Supply power

For the operation of the 3RU11 overload relay there is no additional supply voltage necessary.
The 3RB10 overload relay is self-powered. That means there is no additional supply voltage necessary.

Setting

The 3RU11 thermal overload relay and the 3RB10 electronic overload relay are set by adjusting to the rated motor current with a setting dial. The range on the setting dial is calibrated in amperes.

Important
The overload relays may only be operated between the lower and upper adjustment marks on the current setting range. That means that the operation of the overload relay under or over the current setting range is not permitted.

The following drawing shows an example of setting the 3RU11 thermal overload relay, frame size S00, to the rated motor current.

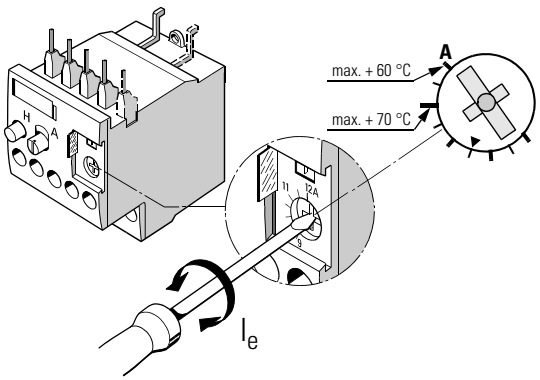

Fig. 4-2: Setting the rated motor current

Sealable cover

The following drawing shows how to secure the current setting dial and the "Manual/Automatic RESET" selector switch against unauthorized adjustment for the 3RU11 thermal overload relay and the 3RB10 electronic overload relay.

Sealing the current setting dial

3RU11 **3RB10**

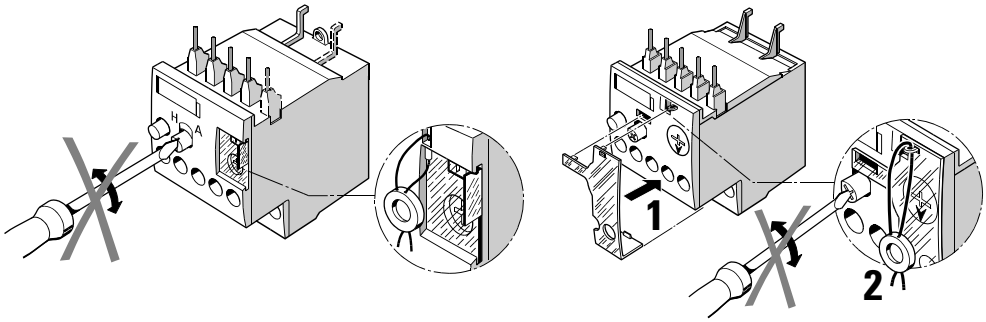

Fig. 4-3: Sealing the current setting dial (frame size S00)

Important
When the sealing cover (transparent sliding window) is closed (3RU11) or mounted (3RB10), it is not possible to use the blue reset button for a switch-over between M (manual RESET) and A (automatic RESET).

Ambient requirements

The 3RU11 thermal overload relays are temperature (ambient) compensated according to IEC 60 947-4-1/DIN VDE 0660 part 102 for a temperature range of -20 °C to +60 °C. At a temperature from +60 °C to +80 °C the setting value of the setting range needs to be reduced by a specific factor according to the table below.

Ambient temperature in °C	Reduction factor for the top setting value
+60	1.0
+65	0.94
+70	0.87
+75	0.81
+80	0.73

According to the table 70 °C has a reduction factor of 13 %. This factor is so small, that because of the overlapping of the current setting ranges no gaps appear to the next setting range. So that at 70 °C a continuous current range of 0.11 A to 87 A can be used.
The 3RB10 electronic overload relay are insensitive to outside influences, such as vibration, aggressive environment, weathering and strong temperature swings. In the temperature range of -25 °C to +70 °C the 3RB10 electronic overload relays in the sizes S00 to S3 are temperature (ambient) compensated according to IEC 60 947-4-1/DIN VDE 0660 part 102.

The 3RB10 electronic overload relays in the sizes S6 and S10/12 require an adjustment to the setting value of the setting range by a specific factor at ambient temperatures of ≥ +60 °C according to the tables below..

Type	Ambient temperature	
	+60° C	+70° C
3RB10 56-.F.0	1.00	0.80
3RB10 66-.GG0	1.00	0.80
3RB10 66-.KG0	1.00	0.93
3RB10 66-.LG0	0.90	0.80

Table 4-6: Reduction factor for the top setting value of a stand alone device

Type	Ambient temperature	
	+60° C	+70° C
3RB10 56-.F .0	0.70	0.60
3RB10 66-.GG0	0.70	0.60
3RB10 66-.KG0	0.82	0.70
3RB10 66-.LG0	0.70	0.60

Table 4-7: Reduction factor for the top setting value when direct mounting to the contactor

Manual-automatic RESET

By pushing in and turning the blue button (RESET button) on the 3RU11 thermal overload relays and 3RB10 electronic overload relays, you can choose between manual and automatic reset.
The following figure shows how to switch between manual and automatic for the 3RU11 and 3RB10 using the example of the 3RU11, frame size S00.

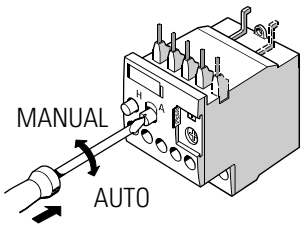

Fig. 4-4: Manual-automatic RESET

When manual resetting is selected, a reset can be performed directly on the device by pressing the RESET button. Remote resetting can be implemented by using the mechanical and electrical RESET modules from the range of accessories (see Section 4.4, "Accessories"). When the blue button is set to Automatic RESET, the relay will be reset automatically.
A reset is not possible until the recovery time has elapsed (see “Recovery time").

Recovery time

After tripping due to an overload, it takes a certain length of time for the bimetal strips of the 3RU11 thermal overload relays to cool down. The relay can only be reset once it has cooled down. This time (recovery time) is dependent on the tripping characteristic and the level of the tripping current.
After tripping due to overload, the recovery time allows the load to cool down. With the 3RB10 electronic overload relays the recovery time is fixed when set on Automatic-RESET and lasts about 4 minutes for frame sizes S00 to S3 and about 7 minutes for frame sizes S6 and S10/S12. When set to manual RESET then the device can be reset immediately.

TEST function

Correct functioning of the ready status of the overload relay can be tested with the TEST slide. The slide is operated to simulate tripping of the relay. During this simulation, the NC contact (95-96) is opened and the NO contact (97-98) is closed whereby the overload relay checks that the auxiliary circuit is wired correctly. When the overload relay is set to Automatic RESET, an automatic reset takes place when the TEST slide is released. The relay must be reset using the RESET button when it is set to Manual RESET.

STOP-Function

When the STOP button is pressed, the NC contact (95-96) is pressed, the NC contact is opened and the series-connected contactor and therefore the load is switched off. The load is reconnected via the contactor when the STOP button is released. Pressing the STOP button does not close the NO contact (97-98).

Status indication

The current status of the overload relay is indicated by the position of the marking on the "TEST function/switching position indicator" slide. The marking on the slide is on the left at the "O" mark following a trip due to overload or phase failure and at the "I" mark otherwise.

Auxiliary contacts

The overload relay is equipped with an NO contact (97-98) for the tripped signal and an NC contact (95-96) for switching off the contactor.
The auxiliary contacts have high contact reliability and are therefore suitable for with PLC's. Also due to the high switching capacity they can be directly connected to the contactor coil.

The following table shows the reaction of the auxiliary contact when activating the TEST, STOP and RESET button.

	TEST	STOP	RESET
NC 95/96			
NO 97/98			

Table 4-8: Auxiliary contact 3RU11/3RB10

Tripping characteristic

The tripping characteristics show the relationship between the tripping time and the tripping current as a multiple of the operational current I_e and are specified for symmetrical three-pole and two-pole loading from cold state.
The smallest current at which tripping occurs is called the limiting tripping current. In accordance with IEC 60 947-4-1/ DIN VDE 0660 Part 102, this must lie within certain specified limits. The limit tripping current for the 3RU11 overload relay for symmetrical three-pole loading lies between 105 % and 120 % of the current setting and for the 3RB10 electronic overload relay at 114 % of the current setting.
Starting from the limiting tripping current, the tripping characteristic moves on to larger tripping currents based on the characteristics of the so-called trip classes (CLASS 10, CLASS 20 etc., see section 4.1 "Specifications/regulations/ approvals").
The tripping characteristic of a three-pole 3RU11 thermal overload relay (see characteristic curve for symmetrical three-pole loading from cold state) is valid when all three bimetal strips are loaded with the same current simultaneously.
If, however, only two bimetal strips are heated as a result of phase failure, these two strips would have to provide the force necessary for operating the release mechanism and, if no additional measures were implemented, they would require a longer tripping time or a higher current. These increased current levels over long periods usually result in damage to the load. To prevent damage, the 3RU11 thermal overload relay features phase failure sensitivity which, thanks to an appropriate mechanical mechanism, results in accelerated tripping according to the characteristic for two-pole loading from cold state.

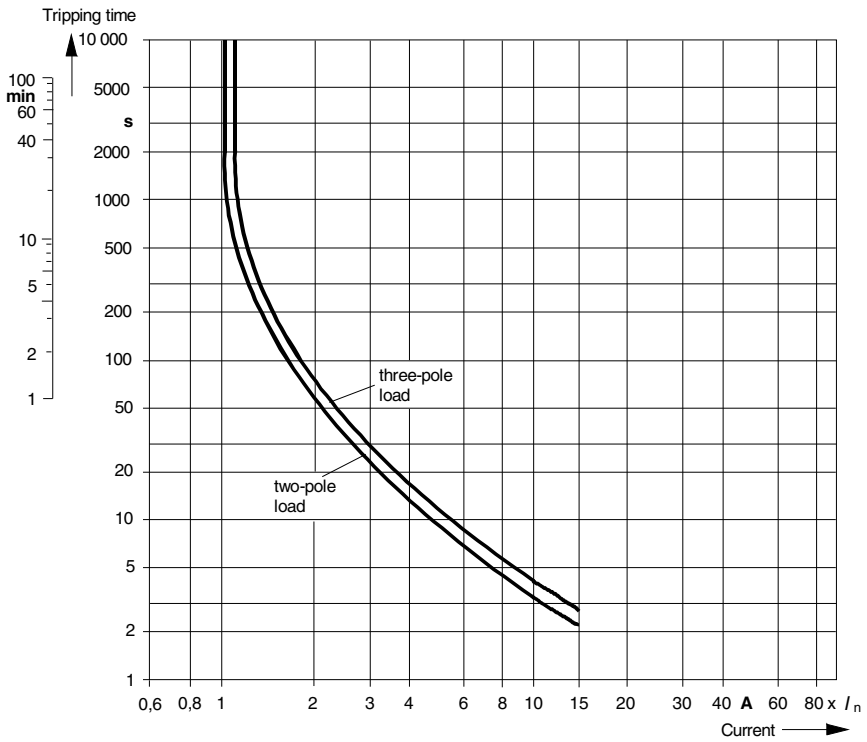

Fig. 4-5: Schematic representation of time-current-characteristic for 3RU11

These are schematic representations of characteristics. The characteristics for individual 3RU11 thermal overload relays can be obtained under
https://support.industry.siemens.com/cs/ww/en/ps/16027/char

The tripping characteristic of a three-pole loaded 3RB10 electronic overload relay from cold state (see schematic representation, Characteristic "1") is valid when all three phases are loaded with the same current simultaneously. In the case of phase loss or a current unbalance of more than 40 %, the 3RB10 solid-state overload relay trip contacts switch within 3 seconds. Thanks to rapid tripping in accordance with the tripping characteristic for two-pole loading from cold state (see schematic representation, Characteristic "3"), the temperature rise in the load is minimized.

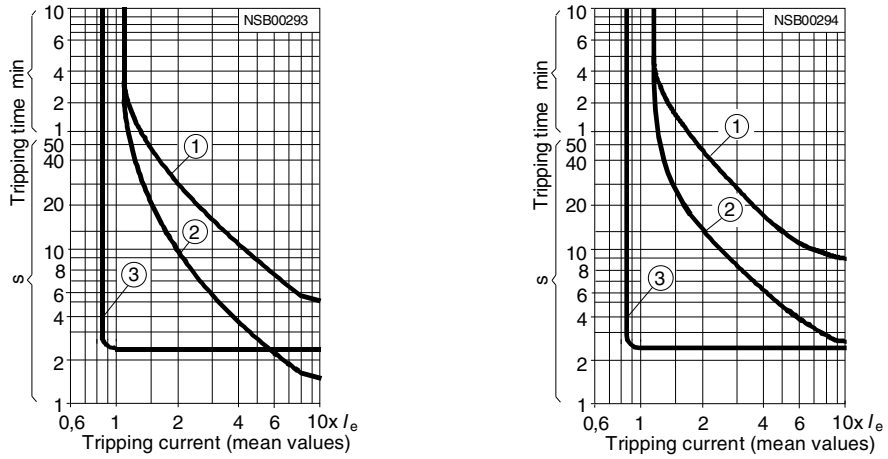

CLASS 10 CLASS 20

Fig. 4-6: Schematic representation of time-current-characteristic for CLASS 10 and CLASS 20, 3RB10

These are schematic representations of characteristics. The characteristics for individual 3RB10 electronic overload relays can be obtained under
https://support.industry.siemens.com/cs/ww/en/ps/16027/char

In contrast to a load in the cold state, a load at operating temperature has a lower heat reserve. This fact affects the overload relay in that following long-term loading at operational current I_e needs to be reduced. The tripping time for the 3RU11 thermal overload relay is reduced to 25 % and for the 3RB10 electronic overload relay to about 30 % (see schematic representation, Characteristic "2").

Phase loss protection

The 3RU11 thermal overload relays and the 3RB10 electronic overload relays both have phase loss protection (see "Tripping characteristics") for the purpose of minimizing the heating of the load during single-phase operation as a result of phase loss.

Important
The 3RB10 electronic overload relays are not suitable for the protection of loads with a grounded wye point.

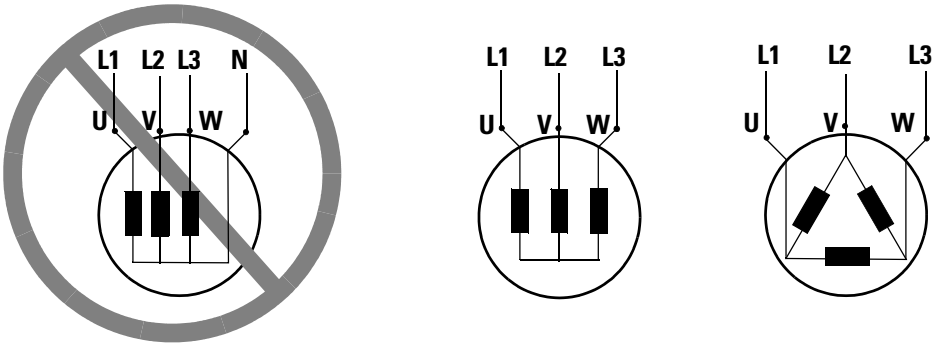

Fig. 4-7: Load types, that the 3RB10 can provide with current dependent protection

4.3.3 3RB12 electronic overload relays

Functions

Drawing of the front view 3RB12:

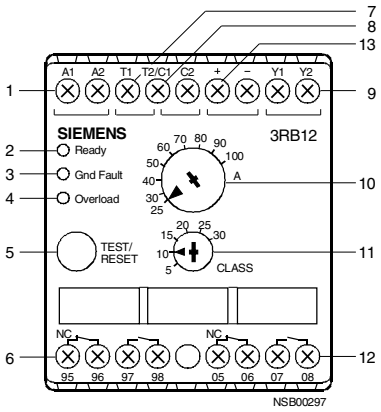

Fig. 4-8: Front view of the 3RB12 electronic overload relays

1 Terminals for the control supply voltage
2 Green "Ready" LED
3 Red "Ground Fault" LED
4 Red "Overload" LED
5 Combined TEST/RESET button with function test
6 1 NO contact/1 NC contact for overload/thermistor tripping or 1 NO contact/1 NC contact for overload/thermistor or ground fault tripping
7 Terminals for thermistor input
8 Terminals for external summation current transformer
9 Terminals for remote or automatic RESET
10 Rotary dial for current setting
11 Rotary dial for the trip class
12 1 NO contact/1 NC contact for ground fault tripping or 1 NO contact/ 1 NC contact for overload warning
13 Analog output 4 mA ... 20 mA

Areas of use

The 3RB12 electronic overload relays are designed for the protection of 3-phase and single phase AC loads. If single-phase AC motors are to be protected with the 3RB12 electronic overload relay, the microprocessor only monitors one phase conductor. The main circuits must therefore be connected to the current transformer in accordance with the operating instructions for the 3RB12 electronic overload relay.

Supply voltage

The 3RB12 electronic overload relays require an external voltage supply. The devices are available for the following control voltages:
24 V DC
110 V to 120 V AC
220 V to 240 V AC
The 3RB12 overload relay with the control voltage of 24 V DC can be operated with the help of the DC/DC power supply SITOP POWER 24 V / 0.375 A (see section 4.4 "Accessories") on a DC supply from 30 V to 264 V.

Setting

The 3RB12 electronic overload relay is adjusted to the rated motor current using a rotary knob. The scale of the setting dial is calibrated in Amperes.

Important
The overload relays may only be operated between the lower and upper adjustment marks on the current setting range, that means that the operation of the overload relay above or below the current setting range is not permitted.

Note
In order to achieve a setting range of 0.25 A to 1.25 A, the wires going to the motor must be looped through the openings in the 3RB1246 overload relay multiple times in accordance with the instructions in section 4.5 "Mounting and connection".

Furthermore the overload relay needs to be set for the required tripping class.

Note
The wiring and the contactor must be sized for the appropriate tripping class (CLASS). The overload relay is delivered with a default setting of tripping class CLASS 10.

Sealable cover

With the help of the sealable cover, 3RB1900-0A, the setting dial for rated motor current and dial for tripping class selection can be secured against unauthorized adjustment. The cover needs to be snapped in the place of the middle identification tab.

Ambient requirements

The 3RB12 electronic overload relays are insensitive to outside influences, such as vibration, aggressive environment, weathering and strong temperature swings. In the temperature range of -25 °C to +70 °C the 3RB12 electronic overload relays are temperature (ambient) compensated according to IEC 60 947-4-1/DIN VDE 0660 part 102.

Manual-automatic RESET

A reset can be performed directly on the device by pressing the TEST/RESET button. A remote reset is possible by connecting a button to terminals Y1 and Y2 of the 3RB12 solid-state overload relay. Automatic resetting is still possible by bridging terminals Y1 and Y2.
A reset is not possible until the recovery time has elapsed (see "Recovery time").

Important
In the case of ground fault tripping, an automatic reset is not possible.

Recovery time

Following a current-dependent trip due to overload, phase unbalance or phase failure, the recovery time is approximately 5 minutes regardless of the reset mode that has been selected. This time is permanently set in the microprocessor to allow the load sufficient time to cool down.
If, however, temperature-dependent tripping takes place as a result of a connected PTC thermistor circuit, the device cannot be reset manually or automatically until the winding temperature at the PTC thermistor falls to 5 K below the response temperature.
After a ground fault trip, the overload relay can be activated again immediately without waiting for a recovery time to elapse. After tripping as a result of a ground fault an Automatic-RESET is not possible.
The recovery time can be taken from the following table depending on the reset mode and the cause of the trip:

When the 3RB12 tripped as a result of:	Then the overload relay is reset after the following time by:		
	brief push of the Test/ RESET Button	Remote-RESET (button activated over Y1-Y2)	Automatic-RESET (jumper** Y1-Y2)
Test	immediate		
Overload*	after 5 min.		
Thermistor*	when 5 K under the tripping temperature is reached		
Ground fault	immediate		non-functional

* In the case the thermistor- and overload trip at the same time, the longer of the two Reset times is correct.
** Jumper (B) is at the time of delivery connected to Y1.

Table 4-9: Recovery times

TEST function

The relay can be tested to ensure the relay is functioning by using the combined TEST/RESET button. The device hardware, LEDs, current monitoring, thermistor input and ground fault input are tested when the button is pressed for up to 2 seconds. If the button is depressed for up to 5 seconds, the current transformer, resistive load and the microprocessor can be tested without the need to deactivate the motor feeder. The motor feeder is deactivated after 5 seconds via the output relay of the 3RB12. On deactivation, all functions of the 3RB12 solid-state overload relay are tested. The current transformer and the resistive load are excluded from the functional test when no voltage is applied to the main circuit.
Testing of the device functions can be done during operation.

STOP function

When the TEST/RESET button is pressed, the overload relay switches off the contactor and therefore the load after 5 seconds. The load is switched on again via the contactor when the TEST/RESET button is pressed again briefly.

Status indication

The status of the 3RB12 solid-state relay is displayed on 3 LEDs:
Green LED "Ready": Continuous green light indicates the operational readiness. The 3RB12 is not ready (LED "Off") when control supply voltage is not applied and when the function test was negative see "Test function").
Red LED "Overload": Continuous red light signals overload tripping due to current overload and flashing red light indicates imminent tripping due to overload (overload warning).
Red LED "Ground Fault": Continuous red light indicates the presence of a ground fault.

Auxiliary contacts

The 3RB12 solid-state overload relay is equipped with two outputs each with one NO contact and one NC contact. Their use depends on the device variation:
1 NO (97-98) for the signal "tripped due to overload and/or thermistor";
1 NC (95-96) for shutting off the contactor and
1 NO(07-08) for the signal "tripped due to ground fault";
1 NC (05-06) for shutting off the contactor
or
1 NO (97-98) for the signal "tripped due to overload and/or thermistor and/or ground fault";
1 NC (95-96) for shutting off the contactor
and
1 NO (07-08) for overload warning;
1 NC (05-06) for shutting off the contactor

Mono- and bistable output relays

The difference between monostable and bistable can be seen in terms of the tripping response of the auxiliary contacts on failure of the control supply voltage.

Note
The 3RB12 electronic overload relays come standard with monostable output relays. A special variation is available with bistable output relays.

The monostable overload relays take up the "tripped" position on failure of the control voltage (> 200 ms) and resume their original state once voltage has been restored. These devices are suitable for systems in which the control voltage is not specifically monitored.
The bistable 3RB12 solid-state overload relays do not change state from "tripped" or "not tripped" on failure of the control voltage. The auxiliary contacts only switch in the event of an overload when supply voltage is applied. These devices are therefore suitable for systems in which the control voltage is separately monitored.

In the event of the failure of the control supply voltage for any length of time (> 0.2 seconds), the output relays respond in either a monostable or bistable manner, depending on the variant involved.

Behavior of the output relays given:	**monostable** 3RB12..-....0	**bistable** 3RB12..-....1
Loss of the control supply voltage	Device trips	No change to the switching status of the auxiliary contact elements
Return of the control supply voltage **without** prior tripping	Device resets	
Return of the control supply voltage **after** prior tripping	Device remains tripped Reset at: - Overload trips after 5 minutes; thermistor trips when 5 K under the operating temperature reached - Ground fault trips immediately	

Table 4-10: Loss of the control supply voltage

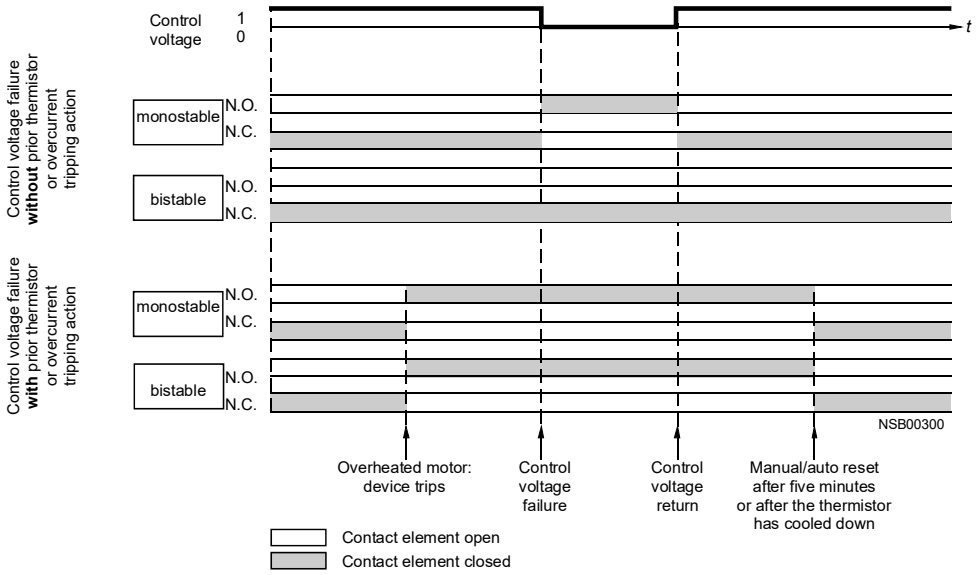

Fig. 4-9: Reaction of the monostable and bistable auxiliary contacts

Thermistor motor protection function

Connecting a thermistor (PTC) sensor circuit offers, in addition to the current dependent protection, the possibility of directly monitoring the temperature of the motor windings. That way the load is protected against excessive temperature, that, may be derived from
- stator critical motors,
- motors with long start-up and braking processes
- motors with blocked cooling or high ambient temperature.

When excessive temperature is measured at the motor windings the 3RB12 switches the auxiliary contact (see point "Auxiliary contacts") shutting off the contactor and therefore the load. The connection for the excessive temperature protection is broken-wire proof. That means the device trips when there is an opening at the connection terminal. The thermistor-motor protection function comes with this feature deactivated.

Analog output

The motor current that is measured by the 3RB12..-...40 overload relay's microprocessor is converted and sent with an analog output signal of 4 mA to 20 mA DC (max. current value of the 3 phases).
The following shows the relationship between the motor current and the analog output signal:

4 ... 20 mA
1 % x I_e = 0.128 mA

$$\mathbf{I/I_e\ [\%] = (I_{out} - 4\ mA) / 0.128\ mA}$$
$$\mathbf{I_{Motor}\ [A] = (I_{out} - 4\ mA) \times I_e / 12.8\ mA}$$

I_{out} Output current of the analog output
I_{Motor} Motor current, max. phase
I_e Set current (rated current for motor)

I_{out} [mA]	I/I_e [%]
0	No connection, wire break! Device not in operation
4.000	0
4.128	1
5.280	10
7.200	25
10.40	50
15.52	90
16.80	100
18.08	110
20.00	125

Example I_{out} = 10.40 mA; I_e = 6.0 A
I = 50 % v. I_e
I_{Motor} = 3 A

Technical data:

Max. output current	23 mA
Terminals	"+" and "-"
Max. load	100 Ω
Accuracy	+/- 10%

Short circuit-proof and idling-proof

The analog output signal can control moving coil instruments with a 4 mA- to 20 mA-input (the upper limit of the scale for all frame sizes is 125 %) or can be stored through analog inputs of PLCs. Furthermore the current values can be transferred with a AS-Interface-analog module over the AS-Interface network.

Ground fault protection

To protect your load from minor short-circuits or ground faults caused by damage to the insulation, humidity, condensation, etc., the 3RB12 solid-state overload relays offer the following two possibilities for earth fault monitoring:

- internal ground fault monitoring (not possible with wye-delta combinations) for motors with 3-wire connections for the detection of fault currents ≥ 30 % of the operational current I_e under rated operation.
- External ground fault detection by connecting a summation current transformer (see "Accessories") for motors with 3-wire and 4-wire connection for detecting sinusoidal fault currents (50/60 Hz) of 0.3 A, 0.5 A and 1 A.

In the case of a ground fault, the relay trips without a delay and switches off the contactor and therefore the load via the auxiliary contactors (see "Auxiliary contactors"). The "Tripped" state is signalled by a red LED "Ground Fault" (see "Indication of status").

Overload warning

A blinking LED on the relay indicates when tripping is iminent as a result of overload, phase imbalance or phase loss after exceeding a limit current. This warning can also be signalled externally.
The overload warning occurs

- at 1.5 x I_e with symmetrical loading and
- at 0.85 x I_e with asymmetrical loading.

The overload warning makes it possible to take corrective measures (for example, disconnecting the load) right away and avoid longer over current dependent stress on the branch circuit.

Self-monitoring

Self-monitoring causes the device to trip in the event of an internal fault. In this case, the overload relay cannot be reset.

Tripping characteristics

The tripping characteristics show the relationship between the tripping time and the tripping current as a multiple of the operational current I_e and are specified for symmetrical three-pole and two-pole loading from cold state.

The smallest current at which tripping occurs is called the limiting tripping current. In accordance with IEC 60 947-4-1/DIN VDE 0660 Part 102, this must be within certain specified limits. The limits of the limiting tripping current lie, in the case of the 3RB12 solid-state overload relay for symmetrical three-pole loading, between 110 % and 120 % of the operational current.
Starting from the limiting tripping current, the tripping characteristic moves on to higher tripping currents based on the characteristics of the so-called trip classes (CLASS 10, CLASS 20 etc. see section 4.1 "Specifications/regulations/approvals").

The tripping characteristic of an overload relay with three-pole loading from cold state (see the diagram “Tripping characteristic for three-pole loading”) is valid when all three phases are loaded with the same current simultaneously. In the event of a phase loss or current unbalance of more than 40 %, the 3RB12 overload relay switches off the contactor more quickly to minimize the temperature rise in the load in accordance with the tripping characteristic for two-pole loading from cold state (see the diagram "Tripping characteristic for 2-pole loading").

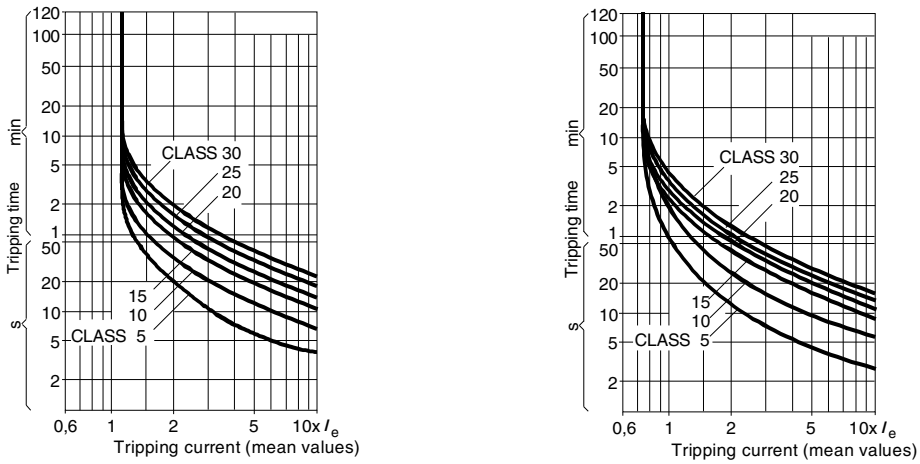

Three-pole loading

Two-pole loading

Fig. 4-10: Time-current-characteristics, schematic representation 3RB12

These are schematic representations of characteristics. The characteristics for individual 3RB12 electronic overload relays can be obtained under
https://support.industry.siemens.com/cs/ww/en/ps/16027/char

In contrast to a load in the cold state, a load at operating temperature has a lower heat reserve. This fact affects the 3RB12 overload relay, in that, following an extended period of loading at operational current I_e, the tripping time is reduced by about 30 %.

Phase loss protection

The 3RB12 electronic overload relays have phase loss protection (see "Tripping characteristics") for the purpose of minimizing the heating of the load during single-phase operation as a result of phase loss.

4.4 Accessories

4.4.1 Electrical remote RESET

Description

For the 3RU11 thermal overload relays, frame sizes S00 to S3, and the 3RB10 electronic overload relays, frame sizes S00 to S10/S12, there is an electrical remote RESET module that can be used for every frame size. With this module the overload relay can be electrically reset after tripping once the recovery time is met. The coil of the module is designed for an operation duration of 0.2 to 4 seconds. Maintained-contact control is not permissible. An electrical RESET can be achieved without an accessory with the 3RB12 electronic overload relay (see section 4.3 "Application and use")

Installation/Removal

The following graphic shows how the electrical remote RESET is installed and removed, using the example of the 3RU11 in frame size S00.

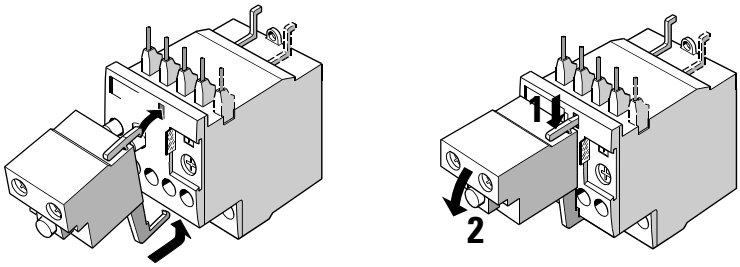

Fig. 4-11: Electrical remote RESET, installation/removal

Voltages

The electrical remote RESET module is available for the following voltages:
24 to 30 V AC/DC
110 to 127 V AC/DC
220 to 250 V AC/DC

Operational range

The operational range of the coil is 0.85 to 1.1 x U_S

Current consumption

The current consumption of the electrical remote RESET-module is:
AC 80 VA, DC 70 W

Manual RESET

The electrical reset can be bypassed by manually pushing the blue reset button on the electrical remote RESET-module.

Connection

The screw connections on terminals E1 and E2 of the electrical remote RESET module are similar to the screw connections of the auxiliary contacts of the 3RU11 and 3RB10 overload relays (see section 4.7 "Technical Data").

4.4.2 Mechanical thru-the-door reset

For the 3RU11 thermal overload relays, frame sizes S00 to S3, and the 3RB10 electronic overload relays, frame sizes S00 to S10/S12, can also be remotely reset by mechanical means. For the mechanical remote RESET there are the two following possibilities:

1 Resetting plunger (same for all frame sizes)
A resetting plunger with a support and funnel 3RU1900-1A for operation from the enclosure door.
The plunger must be cut to the required length.

2 Cable release (same for all frame sizes)
Cable release with support 3RU1900-1B, -1C for panel layouts that do not allow for the standard resetting plunger.
The cable comes in the following lengths
400 mm (3RU1900-1B) and
600 mm (3RU1900-1C)

The 3RB12 electronic overload relays don't have an accessory for mechanical remote RESET.

Resetting plunger

Installation

The following graphic shows how to install the resetting plunger, support, funnel and push button, using the example of the 3RU11 thermal overload relay, frame size S00:

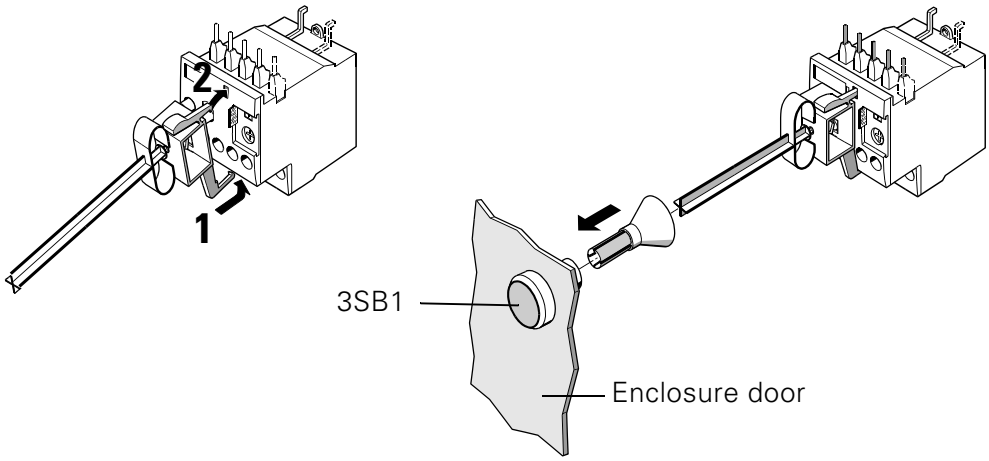

Fig. 4-12: Mechanical remote RESET: resetting plunger, installation

Removal

The following graphic shows the removal of the holder, using the example of the 3RU11 thermal overload relay:

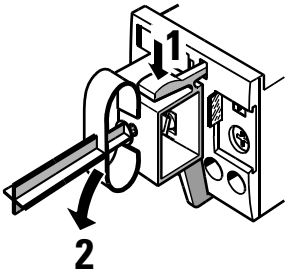

Fig. 4-13: Mechanical remote reset: resetting plunger, removal

Cable release

Installation

The following graphic shows the installation of the cable release with support, using the example of the 3RU11 thermal overload relay in frame size S00:

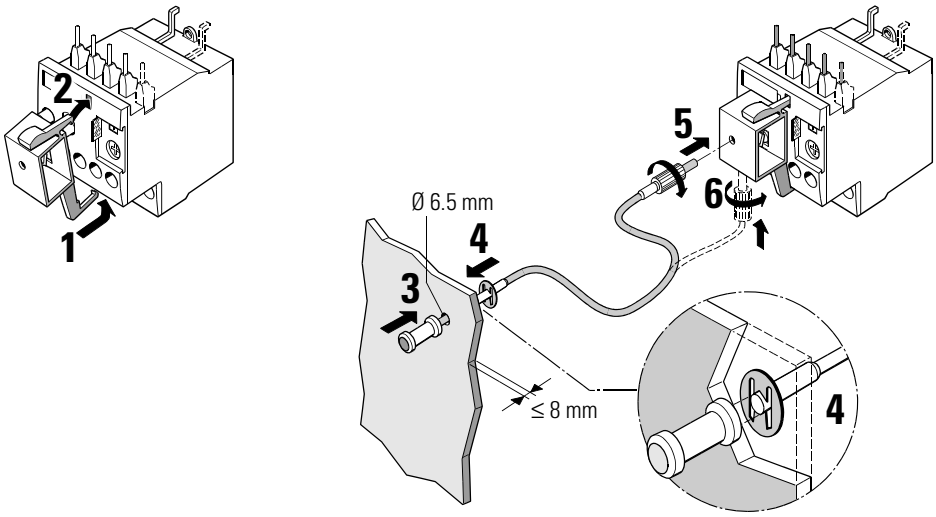

Fig. 4-14: Mechanical remote RESET: cable release, installation

Removal

The following graphic shows the removal of the support for the cable release, using the example of the 3RU11 thermal overload relay:

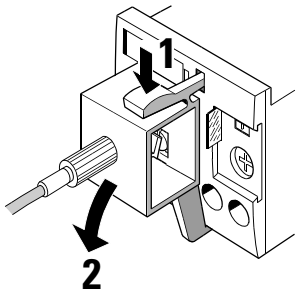

Fig. 4-15: Mechanical remote RESET: cable release, removal

4.4.3 Other accessories

Sealable cover

There is a frame size independent sealable cover for both the 3RB10 and 3RB12 electronic overload relay. In contrast, the 3RU11 thermal overload relay has a built-in sealable cover.

Adapters for individual installation

There is an adapter for individual installation for the 3RU11 thermal overload relay and the 3RB10 electronic overload relay, frame sizes S00 to S3. The 3RB10 overload relays, frame sizes S6 and S10/S12 can be individually installed without an accessory.

The 3RB12 46 electronic overload relays require the use of push-in lugs for panel mounting. The 3RB12 53 overload relay can also be snapped onto 75 mm DIN rail, when using the 3UF1900-0JA00 base plate.

Terminal covers

For the 3RU11 thermal overload relay, frame sizes S2 and S3, the 3RB10 electronic overload relays, frame sizes S2 to S10/S12 and the 3RB12 53 3RB12 57 and 3RB12 62 electronic overload relays, there are terminal covers available. The designs and use of the covers can be taken from the installation instructions.

Box terminal blocks

For the 3RB10 electronic overload relay, frame sizes S6 and S10/S12 there are box terminal blocks for connection to round cables and ribbon cable. The designs and use of the box terminal blocks can be taken from the installation instructions.

Summation current transformer

A summation current transformer for external ground fault detection is available for the 3RB12 electronic overload relay.

DC power supply

For the operation of the externally supplied 3RB12 with a control voltage of 24 V DC on a DC network of 30 V to 264 V the SITOP POWER 24 V/0.375 A, DC power supply can be used.

4.5 Mounting and connection

4.5.1 Mounting

4.5.1.1 3RU11 thermal overload relays and 3RB10 electronic overload relays

Mounting options

The 3RU11 thermal overload relays and the 3RB10 electronic overload relays are electrically and mechanically designed to work in harmony with the 3RT contactor. For that reason it is possible to directly mount the overload relay to a contactor. With a separate accessory it is possible to mount the overload relay as a stand alone device.
The 3RB10 overload relays can also be used in connection with the 3RW30/31 softstarters. However, the mounting instructions found in Chapter 8 must be observed.

Direct mounting

The following drawing shows an example of a 3RU11 thermal overload relay in frame size S00 being mounted directly to a 3RT contactor and an example of a 3RB10 electronic overload relay in frame size S00 being mounted to the 3RW30/31 softstarter.

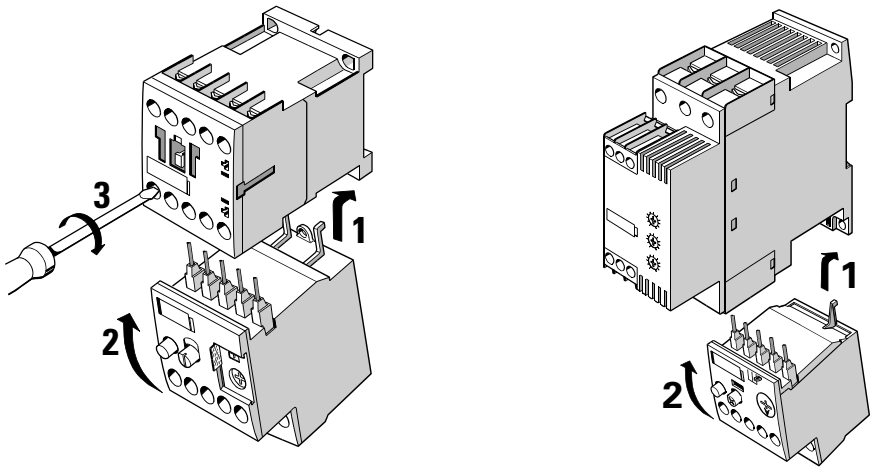

Fig. 4-16: Mounting to the 3RT contactor/3RW3 softstarter

Important
For the use of the overload relays in connection with the 3RW30/31 softstarters, observe the instructions found in Chapter 8.

The following drawing shows the direct mounting of the 3RB10 electronic overload relays, frame size S6 (3RB105) and S10/S12 (3RB106), to the 3RT contactors:

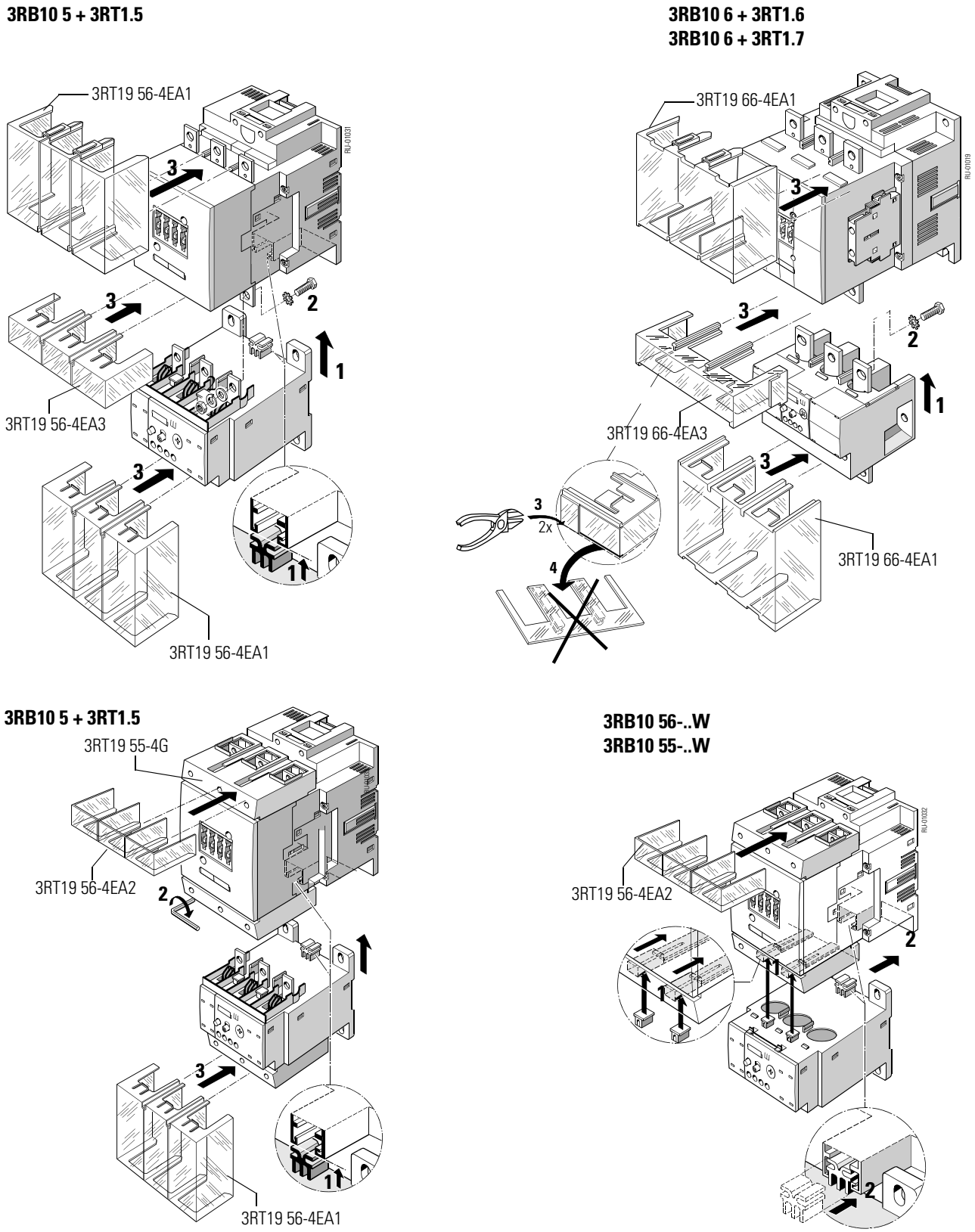

Fig. 4-17: Mounting of the 3RB10 electronic overload relays, frame size S6 (3RB105) and S10/S12 (3RB106), to the 3RT contactors

Important
When installing the 3RB10 electronic overload relays, frame size S6, with the busbar connection pieces, the 3RB10 may not be guided with the nose of the top of the overload housing in the guides of the contactor. The guides on the contactor are for the direct mounting of the overload relay 3RB10, frame size S6 with straight-through current transformer.
To cover the busbar when combining 3RB10 6 and 3RT1.6 or 3RB10 6 and 3RT1.7, use the terminal cover 3RT19 66-4EA3. There is a piece that must be removed as shown in the figure 4-17.

The following drawing shows the removal of the 3RB10 electronic overload relay with straight-through current transformer:

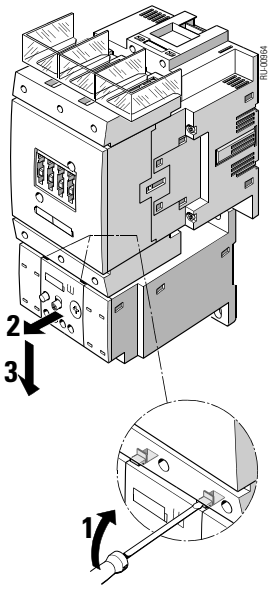

Fig. 4-18: Removal of the 3RB10 electronic overload relays, frame size S6 with straight-through current transformer

The contactor-overload combination, frame sizes S00 to S3 can be snapped on to 35 mm DIN rail, according to EN 50 022. This is shown in the following drawing of a combination in frame size 00:

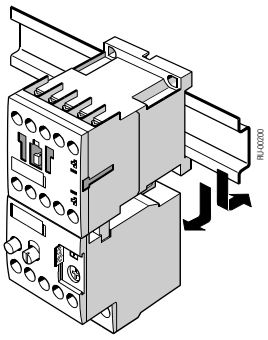

Fig. 4-19: Mounting on 35 mm DIN rail

For the removal of S00/S0 combinations from the DIN rail, the contactor must be pushed downward and then swung forward. By contrast, in S2/S3 combinations the overload relay must be removed first and then the contactor needs to be disengaged from the DIN rail with a screw driver (see description in Chapter 3).
As an alternative to DIN rail mounting, it is possible to screw mount the S00 to S3 combinations. The combinations in the frame sizes S6 to S12, on the other hand, were designed for screw mounting only. When mounting the S00 to S12 combinations with screws, the contactor should to be mounted first and then the overload relay should be mounted to the contactor as in the drawing on the previous page.

Individual installation

The 3RU11 thermal overload relays and the 3RB10 electronic overload relays frame sizes S00 to S3, can also be used as stand alone units when used with adapters for individual installation.

Adapter for individual installation	Frame size	for 3RU11	for 3RB10
3RU19 16-3AA01	S00	X	X
3RU19 26-3AA01	S0	X	X
3RU19 36-3AA01	S2	X	X
3RU19 46-3AA01	S3	X	X

The following drawing shows the mounting and removal of the adapter for individual installation with a 3RU11 thermal overload relay, frame size S2.

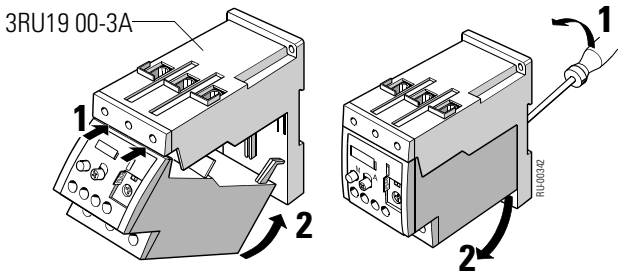

Fig. 4-20: Mounting and removal of the adapter for individual installation (S2)

The adapter can be mounted to 35 mm DIN rail according to EN 50 022.
The frame size S3 adapter can also be mounted to 75 mm DIN rail.
It is also possible to panel mount the adapter.
The frame size S6 3RB10 electronic overload relays are suitable for panel mounting and DIN rail mounting on 35 mm DIN rail - without an additional adapter.

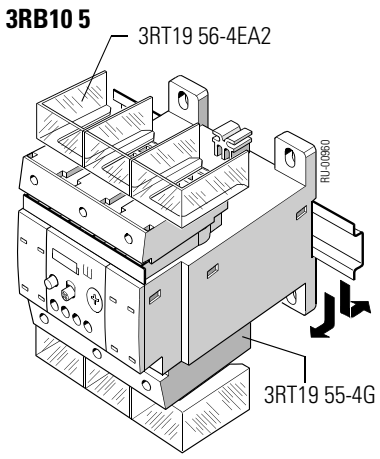

Fig. 4-21: Mounting to 35 mm DIN rail

The 3RB10 electronic overload relays, frame sizes S10/S12, are designed for panel mounting.

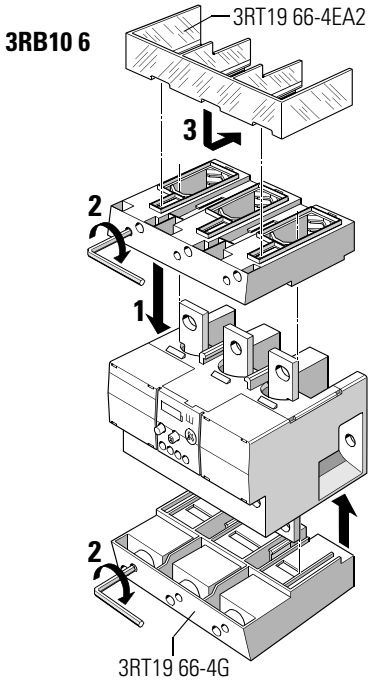

Fig. 4-22: The panel mounting of the 3RB10 electronic overload relay (S10/S12)

Mounting position

The following drawing shows the permissible mounting position when mounted to the contactor and for individual installation of the 3RU11 thermal overload relays. If the mounting position falls in the shaded range, the current setting needs to be adjusted by 10 %.

Contactor with overload relay Overload relay in individual installation

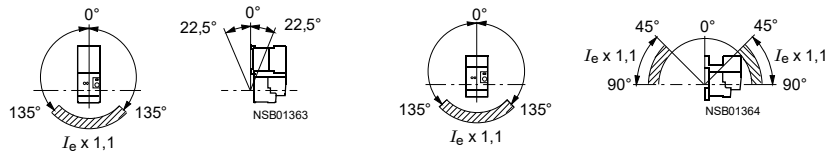

Fig. 4-23: The permissible mounting of the 3RU11 when mounted to the contactor and for individual installation

The mounting position of the 3RB10 electronic overload relays is not restricted.

Minimal clearance

A minimal side clearance to grounded parts of > 6.5 mm is required.

4.5.1.2 3RB12 electronic overload relays

Mounting possibilities

The 3RB12 electronic overload relays can be directly connected to 3RT contactors with the exception of the 3RB12 46. Individual installation is possible with all of the overload relays.

Direct mounting

The 3RB12 53 and 3RB12 57 electronic overload relays can be mounted directly to the 3RT contactor in the manor shown in the following drawing.

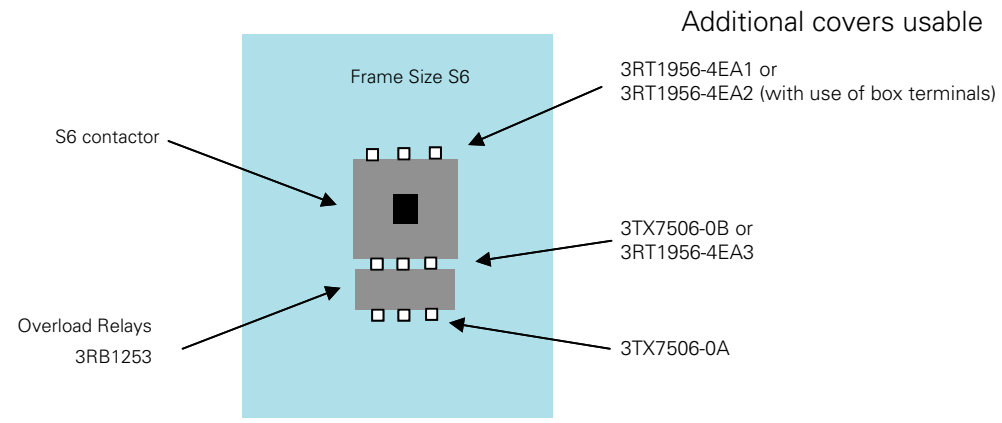

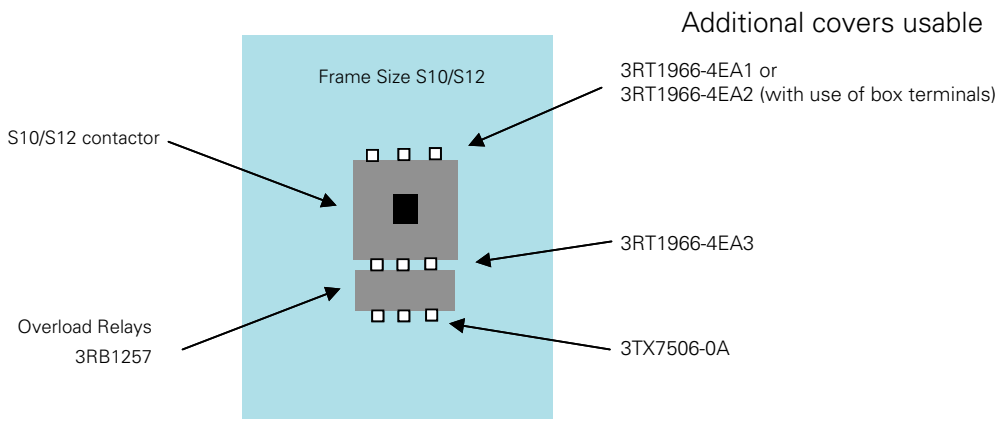

Individual installation

The 3RB12 46 electronic overload relays can be mounted on 35 mm DIN rail according to EN 50 022 or directly to a panel with the use of push-in lugs that are available as an accessory.
The other overload relays are designed for panel mounting with screws. The 3RB12 53 overload relay can also be snapped onto 75 mm DIN rail when using a base plate accessory.

Mounting position

The mounting position of the 3RB12 electronic overload relays is not restricted.

Minimal clearance

A minimal side clearance to grounded parts of > 6.5 mm is required.

4.5.2 Connection

3RU11 thermal overload relays and 3RB10 electronic overload relays

Connection options

The connections for the main current paths are either screw terminals, busbars, Cage Clamp terminals or straight-through current transformers depending on the frame size and model of the device.

The auxiliary circuits have either screw terminals or Cage Clamp terminals, depending on the frame size and model of the device.
The connection type as well as the type of screw driver/bit width, required torque and conductor cross-sections (min.; max.) for the individual devices can be found in section 4.7 "Technical Data".

Straight-through current transformer

The 3RB10 electronic overload relays in frame size S6 are available with straight-through current transformer technology. As shown in the picture below the cables are passed through the straight-through current transformer openings and connected directly to the main terminals on the contactor.

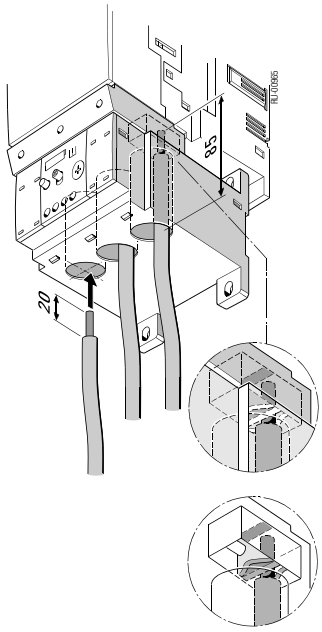

Fig. 4-24: 3RB10 electronic overload relay, frame size S6 with straight-through current transformer technology

Cage Clamp technology

For Cage Clamp terminal technology please observe the instructions in Chapter 1 "System overview".

Coil- and auxiliary contact repeat terminal

When directly mounting the 3RU11 thermal overload relays and the 3RB10 electronic overload relays of frame size S00, the auxiliary contact runs through the coil terminal A2. This simplifies the wiring.

Protection against electrical shock

Observe the data in section 4.7 "Technical Data" regarding protection against electrical shock (according to DIN VDE 0106 part 100) with the 3RU11 thermal overload relays and 3RB10 electronic overload relays.
Possibilities on how to achieve shock protection can be found in the mounting instructions.

3RB12 electronic overload relays

Connection options

The connections for the main current paths are either bar connection or straight-through current transformer technology, depending on frame size and device design.
The auxiliary, control, and thermistor sensor circuits have screw terminals. The connection type as well as the type of screw driver/bit width, required torque and conductor cross-sections (min.; max.) for the individual devices can be found in section 4.7 "Technical Data".

Straight-through current transformer

The 3RB12 46 electronic overload relay is designed with straight-through current transformer technology. The cables are passed through the straight-through current transformer openings and are connected directly to the main terminals on the contactor.

Looping of the cables

The 3RB12 46 electronic overload relays with the setting range 1.25 to 6.3 A can also be used to protect loads with the rated current of 0.25 to 1.25 A. With these rated currents, I_N, every phase must be looped through the openings in the overload multiple times (n-times). With this multiple looping through of the cables, calculate the setting current I_e according to the following formula:
$I_e = n^* I_N$ with $n \leq 5$

The following drawing shows the looping through technique:

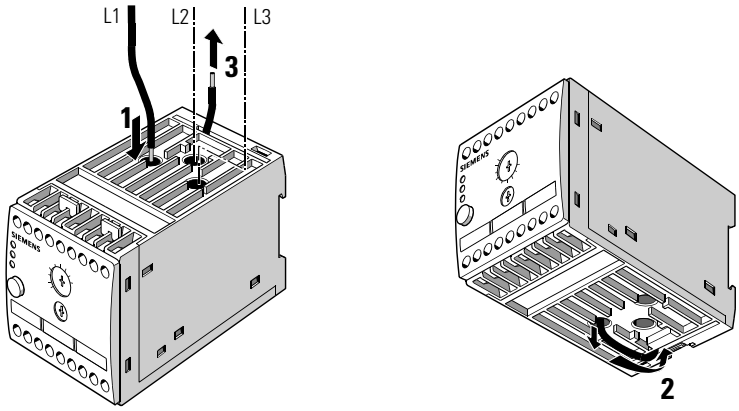

Fig. 4-25: Looping through technique, 3RB12 46

Protection against electrical shock

Observe the data in section 4.7 "Technical Data" regarding protection against electrical shock (according to DIN VDE 0106 part 100) with the 3RB12 electronic overload relays.
Possibilities on how to achieve shock protection can be found in the mounting instructions.

4.5.3 Circuit diagrams

The following diagrams show wiring examples for the 3RU11 thermal overload relays, the 3RB10 and 3RB12 electronic overload relays:

Protection of DC motors with 3RU11

3RU11

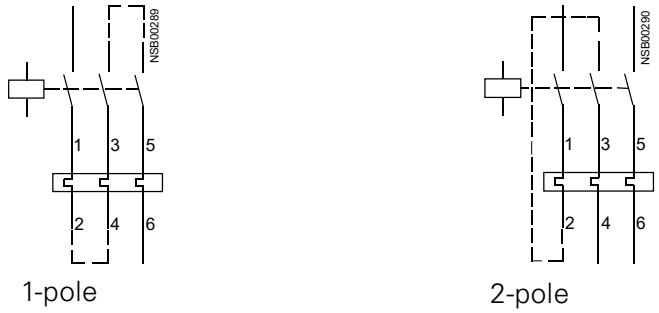

Fig. 4-26: Circuit diagrams 3RU11

General circuit diagrams for 3RU11 and 3RB10

3RU11 and 3RB10

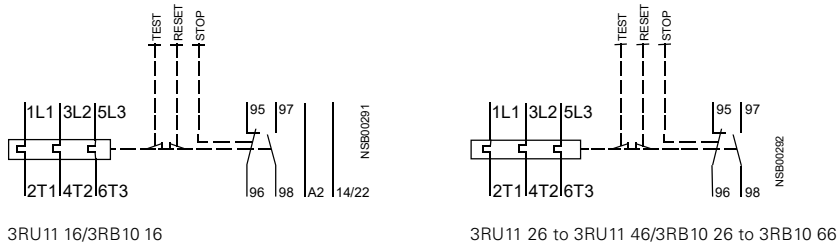

Fig. 4-27: Internal circuit diagrams 3RU11 and 3RB10

3RB10 1 and 3RU11 1

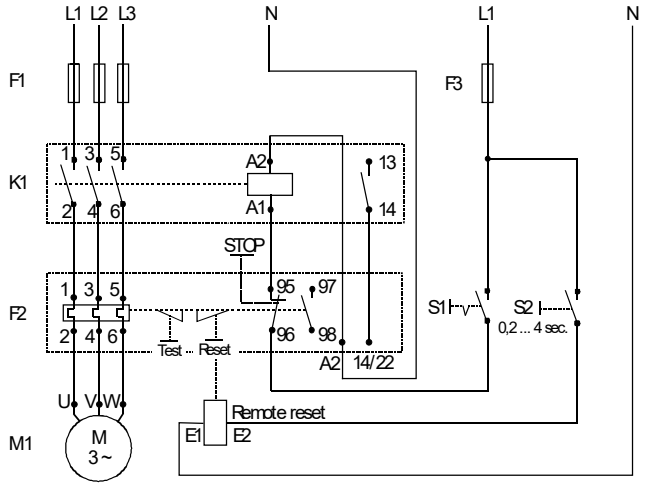

Fig. 4-28: Diagram for thermal 3RU11 1 overload relay and 3RB10 1 electronic overload relay

3RU11 2 to 3RU11 4 / 3RB10 2 to 3RB10 6

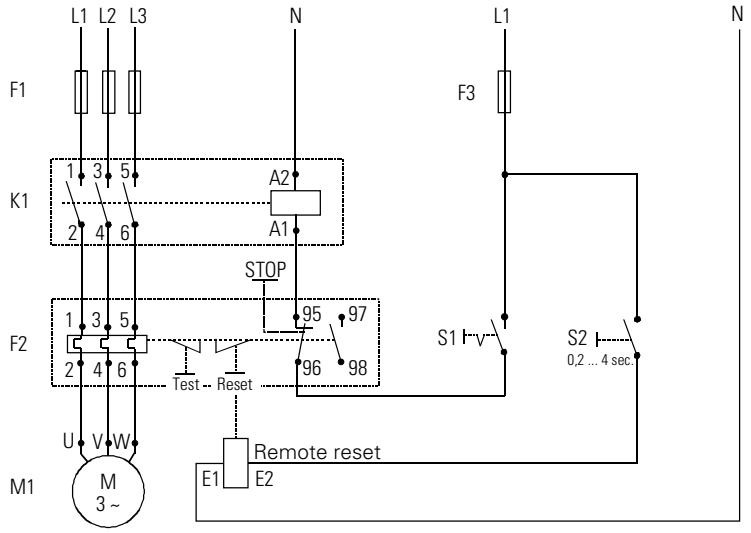

Fig. 4-29: Diagram for 3RU11 2 to 3RU11 4 thermal overload relays and 3RB10 2 to 3RB10 6 electronic overload relays

In single pole loads the 3 main current paths are to be connected in series. (applies only good for 3RU11).

Warning
When using automatic reset and a maintained contact device for starting, the motor restarts automatically.

3RB12 electronic overload relays

3RB12 46- ...0., - ... 1 .;

3RB12 53- ...0., - ... 1 .
3RB12 57- ...0., - ... 1 .
3RB12 62- ...0., - ... 1 .

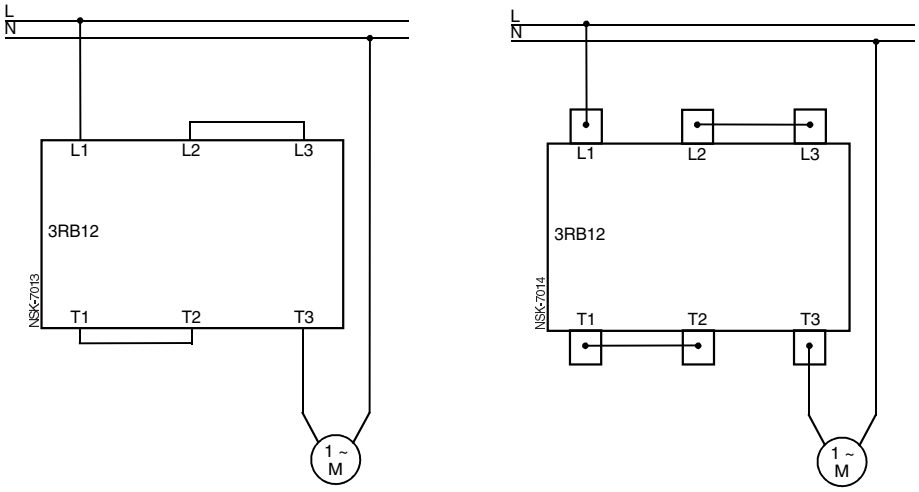

Fig. 4-30: Wiring diagrams for single-phase motors using 3RB12

Important
The electronic overload relays with integrated ground fault detection (3RB12..-....2./3RB12..-....3.) are not suitable for single-phase motors.

3RB12 overload relay, standard design

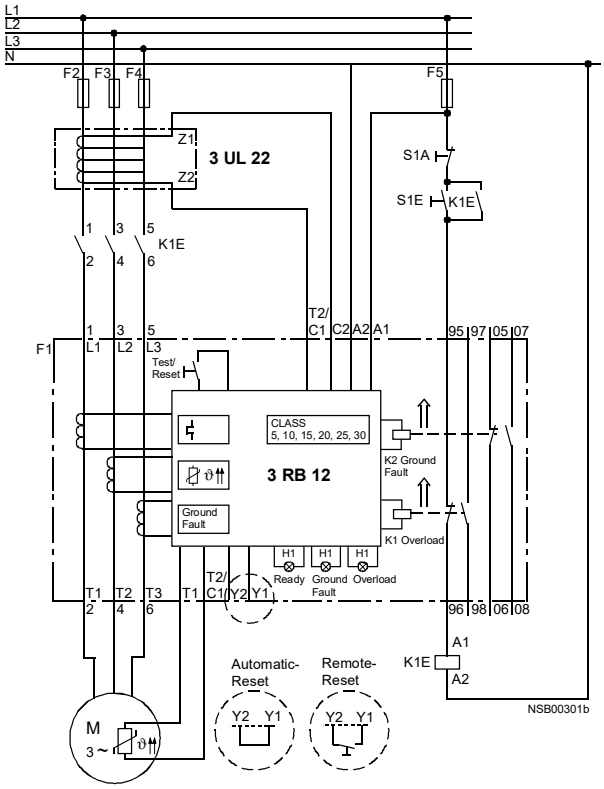

Fig. 4-31: 3RB12 Overload relay, standard design

4.6 Dimensional drawings (dimensions in mm)

3RU11/3RB10/3RB12 overload relays - screw-type terminals

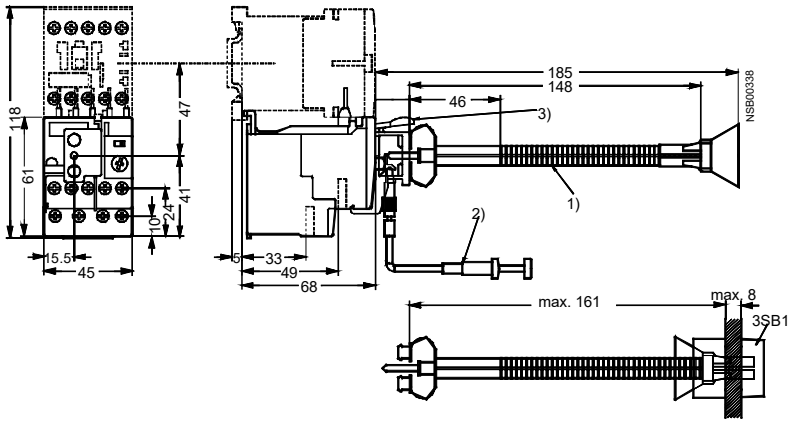

1) Mechanical RESET
2) Cable release
(400 mm or 600 mm long,
Installation on front or side on the support)
3) Support for RESET

Fig. 4-32: 3RU11 16-..B0. (frame size S00) with accessories

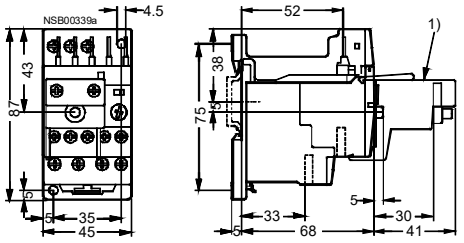

1) Adapter for remote RESET

Fig. 4-33: 3RU11 16-..B., 3RB10 16-..B. (frame size S00)
with adapter for stand-alone installation with accessories

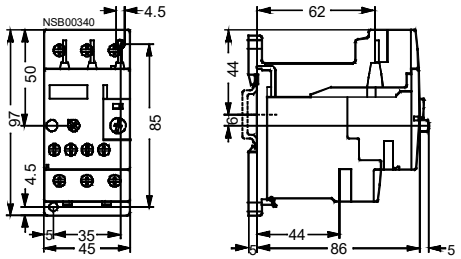

Fig. 4-34: 3RU11 26-..B., 3RB10 26-..B. (frame size S0)
with adapter for stand-alone installation

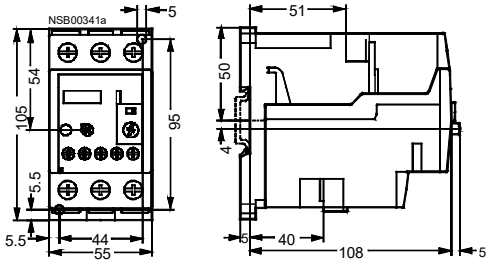

Fig. 4-35: 3RU11 36-..B., 3RB10 36-..B. (frame size S2)
with adapter for stand-alone installation

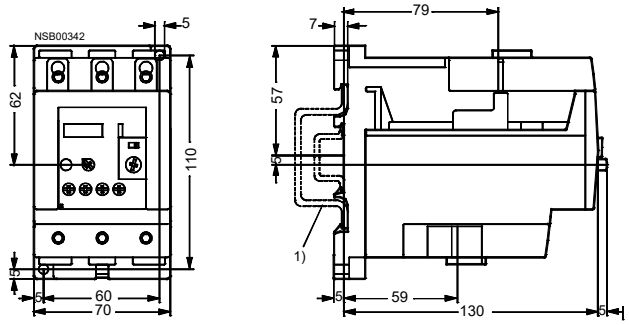

1) Mounting to 35 mm, DIN rail
15 mm deep according to EN 50 022
or 75 mm DIN rail according to EN 50 023

Fig. 4-36: 3RU11 46-..B., 3RB10 46-..B. (frame size S3)
with adapter for stand-alone installation

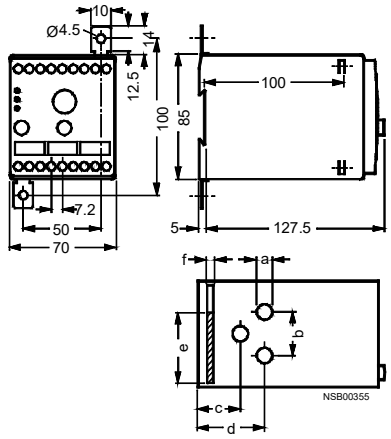

Fig. 4-37: 3RB12 46

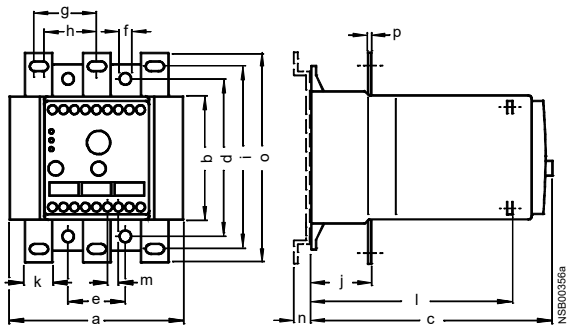

Fig. 4-38: 3RB12 5. / 3RB12 62

Overload relay	a	b	c	d	e	f
3RB12 46-1E	15	29	24	47	—	—
3RB12 46-1P	10	34	29	46	48	4
3RB12 46-1Q	10	34	29	46	48	4

Overload relay	a	b	c	d	e	f	g	h	i	j	k	l	m	n	o	p
3RB12 53-0F	120	85	155	110	40	Ø7	42	37	125	41	20	131	7.2	13	145	4
3RB12 57-0K	145	85	175	105	50	Ø9	52	48	130	46	30	151	7.2	—	160	6
3RB12 62-0L	230	85	190	120	70	Ø1	70	—	135	55	40	166	7.2	—	175	8

3RU11 overload relay– Cage Clamp terminals

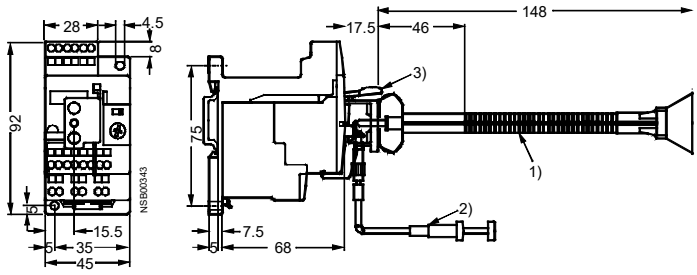

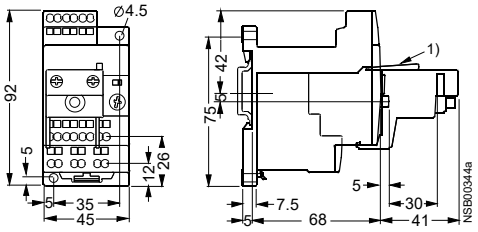

1) Mechanical RESET
2) Cable release
   400 mm or 600 mm long
   Installation on front or side on the support
3) Support

1) Adapter for remote RESET

Fig. 4-39: 3RU11 16-..C1 (frame size S00)
with accessories (same for frame sizes S00 to S3)

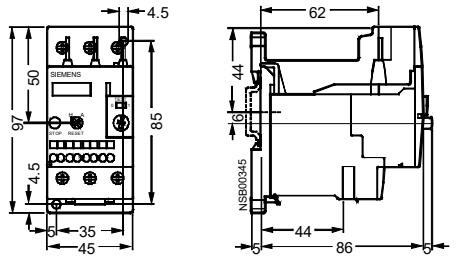

Fig. 4-40: 3RU11 26-..D. (frame size S0) with adapter for stand alone installation

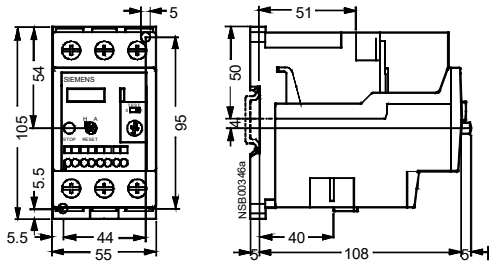

Fig. 4-41: 3RU11 36-..D. (frame size S2) with adapter for stand alone installation

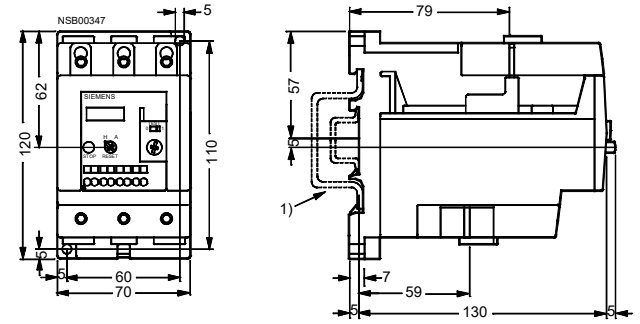

1) Mounting to 35 mm, DIN rail
   15 mm deep according to EN 50 022
   or 75 mm DIN rail according to EN 50 023

Fig. 4-42: 3RU11 46-..D. (frame size S3) with adapter for stand alone installation

4.7 Technical Data

4.7.1 3RU11 thermal overload relays

Type			**3RU11 16**	**3RU11 26**	**3RU11 36**	**3RU11 46**
Frame size			**S00**	**S0**	**S2**	**S3**
Width			**45 mm**	**45 mm**	**55 mm**	**70 mm**
General specifications						
Tripped at			Overload and phase loss			
Tripping class	In acc. with IEC 60 947-4-1	CLASS	10			
Phase loss sensitivity			Yes			
Overload warning			No			
Resetting and recovery						
Resetting options after tripping			Manual, remote, and automatic resetting [1])			
Recovery time	With automatic REST	min.	Depends on the height of the tripping current and the tripping characteristic			
	With manual RESET	min.	Depends on the height of the tripping current and the tripping characteristic			
	With remote RESET	min.	Depends on the height of the tripping current and the tripping characteristic			
Configuration						
Indication of operating status on device			Yes, by means of the "test function/contact position indicator" slider			
TEST function			Yes			
RESET button			Yes			
STOP button			Yes			
For the safe operation of motors with increased safety protection	EC special test certificate number in compliance with directive 94/9/EC		KEMA test certificate no. EX-97.Y.3235 DMT 98 ATEX G001			
Ambient temperatures						
Storage/transportation		°C	-55 to +80			
Operation		°C	-20 to +70			
Temperature compensation		°C	up to 60			
Permissible rated current at	Internal cubicle temperature of 60 °C	%	100 (current reduction is required at above +60 °C)			
	Internal cubicle temperature of 70 °C	%	87			
Repetition terminals						
Terminal for contactor coil			Yes	Not required		
Auxiliary switch repetition terminal			Yes	Not required		
Degree of protection	In acc. with IEC 60 529/DIN VDE 0470 Part 1		IP20		IP20[2])	
Shock protection	In acc. with DIN VDE 0106 Part 100		Protected against touching by fingers			
Sinus shock resistance	In acc. with IEC 68 Part 2-27	*g*/ms	810			
EMC noise immunity						
Conducted disturbance neutralization - burst	In acc. with IEC 61 000-4-4: (corresponds to severity grade 3)	kV	EMC noise immunity is not relevant to thermal overload relays			
Conducted disturbance neutralization - surge	In acc. with IEC 61 000-4-5: (corresponds to severity grade 3)	kV	EMC noise immunity is not relevant to thermal overload relays			
Electrostatic discharge	In acc. with IEC 61 000-4-2: (corresponds to severity grade 3)	kV	EMC noise immunity is not relevant to thermal overload relays			
Field-related disturbance neutralization	In acc. with IEC 61 000-4-3: (corresponds to severity grade 3)	V/m	EMC noise immunity is not relevant to thermal overload relays			
EMC emitted interference			EMC noise immunity is not relevant to thermal overload relays			
Resistance to extreme climates (atmospheric humidity)		%	100			
Site altitude		m	Up to 2000 above sea level; above on request			
Construction type/mounting			Direct mounting [3]) / stand-alone installation with terminal bracket	Direct mounting/stand-alone installation with terminal bracket [4])		

1) Remote RESET in conjunction with suitable accessories

2) Terminal compartment: IP00 degree of protection

3) Only stand-alone installation is possible for the 3RU11 16 overload relay with the Cage Clamp terminal system.

4) For screw-on and snap-on attachment to 35 mm DIN rail; frame size S3 also for 75 mm DIN rail

Type			**3RU11 16**	**3RU11 26**	**3RU11 36**	**3RU11 46**
Frame size			**S00**	**S0**	**S2**	**S3**
Width			**45 mm**	**45 mm**	**55 mm**	**70 mm**
Main circuit						
Rated insulation voltage U_i (pollution degree 3)		V	690			1000
Rated impulse strength U_{imp}		kV	6			8
Rated operating voltage U_e		V	690			1000
Current type	Direct current		Yes			
	Alternating current		Yes, frequency range up to 400 Hz			
Current setting		A	0.11 - 0.16	1.8 - 2.5	5.5 - 8	18 - 25
			Up to 9 - 12	Up to 20 - 25	Up to 40 - 50	Up to 80 - 100
Power loss per device (max.)		W	3.9 to 6.6	3.9 to 6	6 to 9	10 to 16.5
Short-circuit protection	With fuse, without contactor With fuse and contactor		See the selection and ordering data in the catalog See the technical specifications (short-circuit protection with fuses/ circuit breakers for motor feeders)			
Safe isolation between main and auxiliary conducting paths	In acc. with DIN VDE 0106 Part 101 IEC 60 947-1-A1	V	500	690		
Connection of the main circuit						
Connection type			Screw-type terminal/ Cage Clamp terminal[1])	Screw-type terminal	Screw-type terminal with box terminal	Screw-type terminal with box terminal [2])/ bar connection
Screw-type terminal						
• Terminal screw			Pozidriv 2			Allen screw 4 mm
• Tightening torque		Nm	0.8 to 1.2	2 to 2.5	3 to 4.5	4 to 6
• Connection cross-section (min./max.), 1 or 2 conductors	Single-core	mm^2	2 x (0.5 to 1.5) 2 x (0.75 to 2.5) max. 2 x (1 to 4)	2 x (1 to 2.5) 2 x (2.5 to 6) max. 2 x (2.5 to 10)	2 x (0.75 to 16) —	2 x (2.5 to 16) —
	Finely stranded without wire end ferrule	mm^2	—			
	Finely stranded with wire end ferrule	mm^2	2 x (0.5 to 1.5)	2 x (1 to 2.5)	2 x (0.75 to 16)	2 x (2.5 to 35)
		mm^2	2 x (0.75 to 2.5)	2 x (2.5 to 6)	1 x (0.75 to 25)	1 x (2.5 to 50)
	Stranded	mm^2	2 x (0.5 to 1.5)	2 x (1 to 2.5)	2 x (0.75 to 25)	2 x (10 to 50)
		mm^2	2 x (0.75 to 2.5) max. 2 x (1 to 4)	2 x (2.5 to 6) max. 2 x (2.5 to 10)	1 x (0.75 to 35)	1 x (10 to 70)
	AWG cables, single- or multi-core	AWG	2 x (18 to 14)	2 x (14 to 10)	2 x (18 to 3)	2 x (10 to 1/0)
		AWG	—	—	1 x (18 to 1)	2 x (10 to 2/0)
	Ribbon cables (number x width x depth)	mm	—	—	2 x (6 x 9 x 0.8)	2 x (6 x 9 x 0.8)
Bar connection						
• Terminal screw						M 6 x 20
• Tightening torque		Nm				4 to 6
• Connection cross-section	Finely stranded with cable lug	mm^2	—			2 x 70
(min./max.)	Stranded with cable lug	mm^2	—			2 x 70
	AWG cables, single-core or stranded with cable lug	AWG	—			2/0
	With connecting bars (max. width)	mm	—			12

1) For the connection cross-sections for the Cage Clamp terminal system, see "Connecting the auxiliary circuit".
2) The box terminal can be removed. After the box terminal has been removed, busbar and cable-lug connections are possible.

Type				3RU11 16	3RU11 26	3RU11 36	3RU11 46
Frame size				**S00**	**S0**	**S2**	**S3**
Width				**45 mm**	**45 mm**	**55 mm**	**70 mm**
Auxiliary circuit							
Auxiliary contact elements (number x (variant)				1 x (1 NO contact + 1 NC contact)			
Assignment of the auxiliary contact elements				1 NO contact for the "tripped by overload" signal 1 NC contact for switching off the contactor			
Rated insulation voltage U_i (pollution degree 3)			V	690			
Rated impulse strength U_{imp}			kV	6			
Contact rating of the auxiliary contact elements							
NC contact with alternating current AC-14/AC-15	Rated operational current I_e at U_e:						
	• 24 V		A	4			
	• 120 V		A	4			
	• 125 V		A	4			
	• 230 V		A	3			
	• 400 V		A	2			
	• 600 V		A	0.6			
	• 690 V		A	0.5			
NO contact with alternating current AC-14/AC-15	Rated operational current I_e at U_e:						
	• 24 V		A	3			
	• 120 V		A	3			
	• 125 V		A	3			
	• 230 V		A	2			
	• 400 V		A	1			
	• 600 V		A	0.6			
	• 690 V		A	0.5			
NC contact, NO contact with direct current DC-13	Rated operational current I_e at U_e:						
	• 24 V		A	1			
	• 60 V		A	On request			
	• 110 V		A	0.22			
	• 125 V		A	0.22			
	• 220 V		A	0.11			
Conventional free air thermal current I_{th}			A	6			
Contact reliability	(suitable for PLC; 17 V, 5 mA)			yYs			
Short-circuit protection							
With fuse	Performance class	gL/gG	A	6			
		rapid	A	10			
With miniature circuit breaker (C characteristic)			A	6[1])			
Safe isolation between auxiliary conducting paths in acc. with DIN VDE 0106 Part 101			V	415			
Connection of the auxiliary circuit							
Connection type				Screw-type terminal or Cage Clamp terminal			
Connection characteristics				Screw-type terminal		Cage Clamp terminal	
•Terminal screw				Pozidriv 2		—	
•Tightening torque			Nm	0.8 to 1.2		—	
•Connection cross-sections	Single-core		mm^2	2 x (0.5 to 1.5)		2 x (0.25 to 2.5)	
(min./max.) 1 or 2 conductors			mm^2	2 x (0.75 to 2.5)			
	Finely stranded without wire end ferrule		mm^2	—		2 x (0.25 to 2.5)	
	Finely stranded with wire end ferrule		mm^2	2 x (0.5 to 1.5)		2 x (0.25 to 1.5)	
			mm^2	2 x (0.75 to 2.5)			
	Stranded		mm^2	2 x (0.5 to 1.5)		—	
			mm^2	2 x (0.75 to 2.5)			
	AWG cables, single- or multi-core		AWG	2 x (18 to 14)		2 x (24 to 14)	
CSA, UL, CCC rating data							
Auxiliary circuit	Switching capacity			B600, R300			

1) Up to $I_K \leq 0.5$ kA; ≤ 260 V

Short-circuit protection with fuses for motor feeders with short-circuit currents of up to 70 kA at 50/60 Hz 690 VAC
Permissible short-circuit protection for motor starters consisting of an overload relay and a contactor of the coordination type "2"[1])

Adjustment range	**Frame size S00** 3 kW ≙ 3RT10 15 $I_{e\ max}$ = 7 A (at 50 Hz 400 V AC)			4 kW ≙ 3RT10 16 $I_{e\ max}$ = 9 A (at 50 Hz 400 V AC)			5.5 kW ≙ 3RT10 17 $I_{e\ max}$ = 12 A (at 50 Hz 400 V AC)			UL fuse RK5	Circuit breaker for starter protection at I_q = 50 kA / 400 V AC
A	gL/gG	aM	BS88T	gL/gG	aM	BS88T	gL/gG	aM	BS88T	A	
0.11 to 0.16	0.5	—	—	0.5	—	—	0.5	—	—	1	—
0.14 to 0.2	1	—	—	1	—	—	1	—	—	1	3RV1321-0BC10
0.18 to 0.25	1	—	—	1	—	—	1	—	—	1	3RV1321-0CC10
0.22 to 0.32	1.6	—	2	1.6	—	2	1.6	—	2	1	3RV1321-0DC10
0.28 to 0.4	2	—	2	2	—	2	2	—	2	1.6	3RV1321-0EC10
0.35 to 0.5	2	—	2	2	—	2	2	—	2	2	3RV1321-0FC10
0.45 to 0.63	2	—	4	2	—	4	2	—	4	2.5	3RV1321-0GC10
0.55 to 0.8	4	—	4	4	—	4	4	—	4	3	3RV1321-0HC10
0.7 to 1	4	—	6	4	—	6	4	—	6	4	3RV1321-0JC10
0.9 to 1.25	4	—	6	4	—	6	4	—	6	5	3RV1321-0KC10
1.1 to 1.6	6	—	10	6	—	10	6	—	10	6	3RV1321-1AC10
1.4 to 2	6	—	10	6	—	10	6	—	10	8	3RV1321-1BC10
1.8 to 2.5	10	—	10	10	—	10	10	—	10	10	—
2.2 to 3.2	10	—	16	10	—	16	10	—	16	12	—
2.8 to 4	16	—	16	16	—	16	16	—	16	16	—
3.5 to 5	20	6	20	20	6	20	20	6	20	20	—
4.5 to 6.3	20	6	20	20	6	20	20	6	20	25	—
5.5 to 8	20	10	20	20	10	20	20	10	20	30	—
7 to 10				20	16	20	20	16	20	40	—
9 to 12							20	16	25	45	—

Adjustment range	**Frame size S0** 5.5 kW ≙ 3RT10 24 $I_{e\ max}$ = 12 A (at 50 Hz 400 V AC)			7.5 kW ≙ 3RT10 25 $I_{e\ max}$ = 17 A (at 50 Hz 400 V AC)			11 kW ≙ 3RT10 26 $I_{e\ max}$ = 25 A (at 50 Hz 400 V AC)			UL fuse RK5	Circuit breaker for starter protection at I_q = 50 kA / 400 V AC
A	gL/gG	aM	BS88	gL/gG	aM	BS88	gL/gG	aM	BS88	A	
1.8 to 2.5	10	—	10	10	—	10	10	—	10	10	3RV13 21-1CC10
2.2 to 3.2	10	—	16	10	—	16	10	—	16	12	3RV13 21-1DC10
2.8 to 4	16	—	16	16	—	16	16	—	16	16	3RV13 21-1EC10
3.5 to 5	20	6	20	20	6	20	20	6	20	20	3RV13 21-1FC10
4.5 to 6.3	20	6	25	20	6	25	20	6	25	25	3RV13 21-1GC10
5.5 to 8	25	10	25/32 [2])	25	10	25/32 [2])	25	10	25	30	3RV13 21-1HC10
7 to 10	25	16	25/32 [2])	25	16	25/32 [2])	32	16	35	40	3RV13 21-1JC10
9 to 12.5	25	20	25/32 [2])	25	20	25/32 [2])	35	20	35	45	3RV13 21-1KC10
11 to 16	25	20	25/32 [2])	25	20	25/32 [2])	35	20	35	60	3RV13 21-4AC10
14 to 20	—	—	—	25	20	25/32 [2])	35	20	35	80	3RV13 21-4BC10
17 to 22	—	—	—	—	—	—	35	20	35	80	3RV13 21-4CC10
20 to 25	—	—	—	—	—	—	35	20	35	100	

1) Type of coordination and short-circuit protection devices according to IEC 60 947-4-1/DIN VDE 660 Part 102:
Type of coordination 1: In the event of a short-circuit, persons and equipment must not be in danger from the contactor or starter. These do not have to be suitable for subsequent operation (without repair and replacement of parts).
Type of coordination 2: In the event of a short-circuit, persons and equipment must not be in danger from the contactor or starter. These must be suitable for subsequent operation. There is a risk of welding of the contacts.
2) At max. 415 V.

Short-circuit protection with fuses for motor feeders with short-circuit currents of up to 50 kA at 50/60 Hz 690 VAC
Permissible short-circuit protection for motor starters consisting of an overload relay and a contactor of the coordination type "2"[1]

Adjustment range	**Frame size S2** 15 kW ≙ 3RT10 34 $I_{e\ max}$ = 32 A (at 50 Hz 400 V AC)			18.5 kW ≙ 3RT10 35 $I_{e\ max}$ = 40 A (at 50 Hz 400 V AC)			22 kW ≙ 3RT10 36 $I_{e\ max}$ = 50 A (at 50 Hz 400 V AC)			UL fuse RK5	Circuit breaker for starter protection at I_q = 50 kA / 400 V AC
A	gL/gG	aM	BS88	gL/gG	aM	BS88	gL/gG	aM	BS88	A	
5.5 to 8	25	10	25	25	10	25	25	10	25	30	—
7 to 10	32	16	32	32	16	32	32	16	32	40	—
9 to 12.5	35	16	35	35	16	35	35	16	35	50	—
11 to 16	40	20	40	40	20	40	40	20	40	60	—
14 to 20	50	25	50	50	25	50	50	25	50	80	—
18 to 25	63	32	63	63	32	63	63	32	63	100	3RV13 31-4DC10
22 to 32	63	35	63	63	35	63	80	35	80	125	3RV13 31-4EC10
28 to 40	63	50	63	63	50	63	80	50	80	150	3RV13 31-4FC10
36 to 45	—	—	—	63	50	80	80	50	80	175	3RV13 31-4GC10
40 to 50	—	—	—	—	—	—	80	50	80	200	3RV13 31-4HC10

Adjustment range	**Frame size S3** 30 kW ≙ 3RT10 44 $I_{e\ max}$ = 65 A (at 50 Hz 400 V AC)			37 kW ≙ 3RT10 45 $I_{e\ max}$ = 80 A (at 50 Hz 400 V AC)			45 kW ≙ 3RT10 46 $I_{e\ max}$ = 95 A (at 50 Hz 400 V AC)			UL fuse RK5	Circuit breaker for starter protection at I_q = 50 kA / 400 V AC
A	gL/gG	aM	BS88	gL/gG	aM	BS88	gL/gG	aM	BS88	A	
18 to 25	63	32	63	63	32	63	63	32	63	100	—
22 to 32	80	35	80	80	35	80	80	35	80	125	—
28 to 40	80	50	80	80	50	80	80	50	80	150	—
36 to 50	125	50	125	125	50	125	125	50	125	200	—
45 to 63	125	63	125	160	63	160	160	63	160	250	3RV13 41-4JC10
57 to 75	—	—	—	160	80	160	160	80	160	300	3RV13 41-4KC10
70 to 90	—	—	—	—	—	—	160	100	160	350	3RV13 41-4LC10
80 to 100	—	—	—	—	—	—	160	100	160	350	3RV13 41-4MC10

1) Type of coordination and short-circuit protection devices according to IEC 60 947-4-1/DIN VDE 660 Part 102:
Type of coordination 1: In the event of a short-circuit, persons and equipment must not be in danger from the contactor or starter. These do not have to be suitable for subsequent operation (without repair and replacement of parts).
Type of coordination 2: In the event of a short-circuit, persons and equipment must not be in danger from the contactor or starter. These must be suitable for subsequent operation. There is a risk of welding of the contacts.

4.7.2 3RB10 electronic overload relays

Type			**3RB10 16**	**3RB10 26**	**3RB10 36**	**3RB10 46**
Frame size			**S00**	**S0**	**S2**	**S3**
Width			**45 mm**	**45 mm**	**55 mm**	**70 mm**
General specifications						
Tripped at			Overload, phase loss, and phase imbalance (>40 % in acc. with NEMA)			
Tripping class	In acc. with IEC 60 947-4-1	CLASS	10 and 20, depending on the variant			
Phase loss sensitivity			Yes, tripped from a warm state < 3 seconds			
Overload warning			No			
Resetting and recovery						
Resetting options after tripping			Manual, remote, and automatic resetting [1])			
Recovery time	With automatic RESET	min.	Approx. 4			
	With manual RESET	min.	Immediate			
	With remote RESET	min.	Immediate			
Configuration						
Indication of operating status on device			Yes, by means of the "test function/contact position indicator" slider			
TEST function			yes			
RESET button			yes			
STOP button			yes			
For the safe operation of motors with increased safety protection	EC special test certificate number in compliance with directive 94/9/EC		On request			
Ambient temperatures						
Storage/transportation		°C	-55 to +80			
Operation		°C	-20 to +70			
Temperature compensation		°C	Up to 70			
Permissible rated current at	Internal cubicle temperature of 60 °C	%	100 (current reduction is required at above +60 °C)			
	Internal cubicle temperature of 70 °C	%	100 (current reduction is required at above +60 °C)			
Repetition terminals						
Terminal for contactor coil			Yes	Not required		
Auxiliary switch repetition terminal			Yes	Not required		
Degree of protection	In acc. with IEC 60 529/DIN VDE 0470 Part 1		IP20		IP20[2])	
Shock protection	In acc. with DIN VDE 0106 Part 100		Protected against touching by fingers			
Sinus shock resistance	In acc. with IEC 68 Part 2-27	*g*/ms	8/10 and 15/11			
EMC noise immunity						
Conducted disturbance neutralization - burst	In acc. with IEC 61 000-4-4: (corresponds to severity grade 3)	kV	2			
Conducted disturbance neutralization - surge	In acc. with IEC 61 000-4-5: (corresponds to severity grade 3)	kV	2/1 (line to ground/line to line)			
Electrostatic discharge	In acc. with IEC 61 000-4-2: (corresponds to severity grade 3)	kV	6/8 (contact/air discharge)			
Field-related disturbance neutralization	In acc. with IEC 61 000-4-3: (corresponds to severity grade 3)	V/m	3	10[3])	10	
EMC emitted interference			Limit value class B in acc. with CISPR 11			
Resistance to extreme climates (atmospheric humidity)		%	100			
Dimensions			See dimensional drawings			
Site altitude		m	Up to 2000 above sea level			
Installation position			Any			
Construction type/mounting			Direct mounting/stand-alone installation with terminal bracket [4])			

1) Remote RESET in conjunction with suitable accessories

2) Terminal compartment: IP00 degree of protection

3) For the setting ranges 0.1 to 0.4 A, 0.4 to 1.6 A, and 1.5 to 6 A, it is 3 V/m.

4) For screw-on and snap-on attachment to 35 mm DIN rail; frame size S3 also for 75 mm DIN rail

Type			**3RB10 16**	**3RB10 26**	**3RB10 36**	**3RB10 46**
Frame size			**S00**	**S0**	**S2**	**S3**
Width			**45 mm**	**45 mm**	**55 mm**	**70 mm**
Main circuit						
Rated insulation voltage U_i (pollution degree 3)		V	690			1000
Rated impulse strength U_{imp}		kV	6			8
Rated operating voltage U_e		V	690			1000
Current type	Direct current		No			
	Alternating current		Yes, 50/60 Hz ± 3 (other frequencies on request)			
Current setting		A	0.1 - 0.4	0.1 - 0.4	6 - 25	13 - 50
			Up to 3 - 12	Up to 6 - 25	Up to 13 - 50	Up to 25 - 100
Power loss per device (max.)		W	Approximately 0.5			
Short-circuit protection	With fuse, without contactor With fuse and contactor		See the selection and ordering data in the catalog See the technical specifications (short-circuit protection with fuses for motor feeders)			
Safe isolation between main and auxiliary conducting paths	In acc. with DIN VDE 0106 Part 101 IEC 60 947-1-A1	V	On request			
Connection of the main circuit						
Connection type			Screw-type terminal		Screw-type terminal with box terminal	Screw-type terminal with box terminal [1])/bar connection
Screw-type terminal						
•Terminal screw			Pozidriv 2			Allen screw 4 mm
•Tightening torque		Nm	0.8 to 1.2	2 to 2.5	3 to 4.5	4 to 6
•Connection cross-sections (min./max.), 1 or 2 conductors	Single-core	mm^2	2 x (0.5 to 1.5) 2 x (0.75 to 2.5) max. 2 x (1 to 4)	2 x (1 to 2.5) 2 x (2.5 to 6) max. 2 x (2.5 to 10)	2 x (0.75 to 16) —	2 x (2.5 to 16) -
	Finely stranded without wire end ferrule	mm^2	—			
	Finely stranded with wire end ferrule	mm^2	2 x (0.5 to 1.5)	2 x (1 to 2.5)	2 x (0.75 to 16)	2 x (2.5 to 35)
		mm^2	2 x (0.75 to 2.5)	2 x (2.5 to 6)	1 x (0.75 to 25)	1 x (2.5 to 50)
	Stranded	mm^2	2 x (0.5 to 1.5)	2 x (1 to 2.5)	2 x (0.75 to 25)	2 x (10 to 50)
		mm^2	2 x (0.75 to 2.5) max. 2 x (1 to 4)	2 x (2.5 to 6) max. 2 x (2.5 to 10)	1 x (0.75 to 35)	1 x (10 to 70)
	AWG cables, single- or multi-core	AWG	2 x (18 to 14)	2 x (14 to 10)	2 x (18 to 3)	2 x (10 to 1/0)
		AWG	—	—	1 x (18 to 1)	2 x (10 to 2/0)
	Ribbon cables (number x width x depth)	mm	—	—	2 x (6 x 9 x 0.8)	2 x (6 x 9 x 0.8)
Bar connection						
•Terminal screw						M 6 x 20
•Tightening torque		Nm				4 to 6
•Connection cross-section	Finely stranded with cable lug	mm^2	—			2 x 70
(min./max.)	Stranded with cable lug	mm^2	—			2 x 70
	AWG cables, single-core or stranded with cable lug	AWG	—			2/0
	With connecting bars (max. width)	mm	—			12

1) The box terminal can be removed. After the box terminal has been removed, busbar and cable-lug connections are possible.

Type			**3RB10 56**	**3RB10 66**
Frame size			**S6**	**S10/S12**
Width			**120 mm**	**145 mm**
General specifications				
Tripped at			overload, phase loss and phase imbalance (>40 % according to NEMA)	
Tripping class	In acc. with IEC 60 947-4-1	CLASS	10 and 20, depending on the model	
Phase loss sensitivity			Yes, tripped from a warm state < 3 seconds	
Overload warning			No	
Resetting and recovery				
Resetting options after tripping			Manual, remote, and automatic resetting[1])	
Recovery time	With automatic RESET	min	Approx. 7	
	With manual RESET	min	Immediate	
	With remote RESET	min	Immediate	
Configuration				
Indication of operating status on device			Yes, by means of the "test function/contact position indicator" slider	
TEST function			Yes	
RESET button			Yes	
STOP button			Yes	
For the safe operation of motors with increased safety protection	EC special test certificate number in compliance with directive 94/9/EC		PTB 01 ATEX 3203	PTB 01 ATEX 3316
Ambient temperatures				
Storage/transportation		°C	–55 to +80	
Operation		°C	–25 to +70	
Temperature compensation		°C	see description	
Permissible rated current at	Internal cubicle temperature of 60 °C	%	see description	
	Internal cubicle temperature of 70 °C	%	see description	
Repetition terminals				
Terminal for contactor coil			Not required	
Auxiliary switch repetition terminal			Not required	
Degree of protection	In acc. with IEC 60 529/DIN VDE 0470 Part 1		IP20[2])	
Shock protection	In acc. with DIN VDE 0106 Part 100		Touch safe with cover	
Sinus shock resistance	In acc. with IEC 68 Part 2-27	*g*/ms	8/10 and 15/11	
EMC noise immunity				
Conducted disturbance neutralization - burst	In acc. with IEC 61 000-4-4: (corresponds to severity grade 3)	kV	2	
Conducted disturbance neutralization - surge	In acc. with IEC 61 000-4-5: (corresponds to severity grade 3)	kV	2/1 (line to earth/line to line)	
Electrostatic discharge	In acc. with IEC 61 000-4-2: (corresponds to severity grade 3)	kV	6/8 (contact/air discharge)	
Field-related disturbance neutralization	In acc. with IEC 61 000-4-3: (corresponds to severity grade 3)	V/m	10	
EMC emitted interference			Limit value class B in acc. with CISPR 11	
Resistance to extreme climates (atmospheric humidity)		%	100	
Dimensions			See dimensional drawings	
Site altitude		m	Up to 2000 above sea level	
Installation position			Any	
Construction type/mounting			Direct mounting/stand-alone installation with terminal bracket [3])	

1) Remote reset in conjunction with suitable accessories.

2) Terminals: IP00 degree of protection.

3) For screw-on and snap-on attachment to 35 mm DIN rail (with S10/S12 DIN rail mounting not possible).

Type			**3RB10 56**	**3RB10 66**
Frame size			**S6**	**S10/S12**
Width			**120 mm**	**145 mm**
Main circuit				
Rated insulation voltage U_i (pollution degree 3)		V	1000	
Rated impulse strength U_{imp}		kV	8	
Rated operating voltage U_e		V	1000	
Current type	Direct current		No	
	Alternating current		YES, 50/60 Hz ± 3 (other frequencies upon request)	
Current setting		A	50 - 200	55 - 250 to 300 - 630
Power loss per device (max.)		W	Approx. 0.05	
Short-circuit protection	With fuse, without contactor With fuse and contactor		See the selection and ordering data in the catalog See the technical specifications (short-circuit protection with fuses/ circuit breakers for motor feeders)	
Safe isolation between main and auxiliary conducting paths	Acc. with IEC 60 947-1 DIN VDE 0106 part 101	V	1000	
Connection of the main circuit				
Connection type			Screw-type terminal with box terminal [1])/bar connection	Screw-type terminal with box termina
Schraubanschluss				
•Terminal screw			Allen screw 4 mm	Allen screw 5 mm
•Tightening torque		Nm	10 to 12	20 to 22
•Connection cross-section (min./max.), 1 or 2 conductors	Single-core	mm^2	—	
	Finely stranded without wire end ferrule	mm^2	with box terminals 3RT19 55-4G 2 x (1 x max. 50, 1 x max. 70) 1 x (10 to 70)	2 x (50 to 185) front clamping point only: 1 x (70 to 240)
			with box terminals 3RT19 56-4G 2 x (1 x max. 95, 1 x max. 120) 1 x (10 to 120)	rear clamping point only: 1 x (120 to 185)
	Finely stranded with wire end ferrule	mm^2	with box terminals 3RT19 55-4G 2 x (1 x max. 50, 1 x max. 70) 1 x (10 to 70)	2 x (50 to 185) front clamping point only: 1 x (70 to 240)
			with box terminals 3RT19 56-4G 2 x (1 x max. 95, 1 x max. 120) 1 x (10 to 120)	rear clamping point only: 1 x (120 to 185)
	Stranded	mm^2	with box terminals 3RT19 55-4G 2 x (max. 70) 1 x (16 to 70)	2 x (70 to 240) front clamping point only: 1 x (95 to 300)
			with box terminals 3RT19 56-4G 2 x (max. 120) 1 x (16 to 120)	rear clamping point only: 1 x (120 to 240)
	AWG cables, single- or multi-core	AWG	with box terminals 3RT19 55-4G 2 x (max. 1/0) 1 x (6 to 2/0)	2 x (2/0 to 500 kcmil) front clamping point only: 1 x (3/0 to 600 kcmil)
		AWG	with box terminals 3RT19 56-4G 2 x (max. 3/0) 1 x (6 to 250 kcmil)	rear clamping point only: 1 x (250 kcmil to 500 kcmil)
	Ribbon cables (number x width x depth)	mm	with box terminals 3RT19 55-4G 2 x (6 x 15.5 x 0.8) 1 x (3 x 9 x 0.8 to 6 x 15.5 x 0.8)	2 x (20 x 24 x 0.5) 1 x (6 x 9 x 0.8 to 20 x 24 x 0.5)
			with box terminals 3RT19 56-4G 2 x (10 x 15.5 x 0.8) 1 x (3 x 9 x 0.8 to 10 x 15.5 x 0.8)	rear clamping point only: 1 x (250 kcmil to 500 kcmil)
Bar connection				
•Terminal screw			M8 x 25	M 10 x 30
•Tightening torque		Nm	10 to 14	14 to 24
•Connection cross-section	Finely stranded with cable lug	mm^2	16 to 95[2])	50 to 240[3])
(min./max.)	Stranded with cable lug	mm^2	25 to120[2])	70 to 240[3]) 2 x 70
	AWG cables, single-core or stranded with cable lug	AWG	4 to 250 kcmil	2/0 to 500 kcmil
	With connecting bars (max. width)	mm	17	25

1) Screw connection is possible using the appropriate box terminals from the accessories range.
2) When connecting cable lugs acc. to DIN 46 235 with conductor cross-sections of 95 mm^2 and above, the 3RT19 56-4EA1 terminal cover is required to maintain the phase spacing.
3) When connecting cable lugs acc. to DIN 46 234 with conductor cross-sections of 240 mm^2 and above, as well as DIN 46 235 with conductor cross-sections of 185 mm^2 and above, the 3RT19 66-4EA1 terminal cover is required to maintain the phase spacing.

Type				**3RB10 16**	**3RB10 26**	**3RB10 36**	**3RB10 46**
Frame size				**S00**	**S0**	**S2**	**S3**
Width				**45 mm**	**45 mm**	**55 mm**	**70 mm**
Auxiliary circuit							
Auxiliary contact elements (number x (variant)				1 x (1 NO contact + 1 NC contact)			
Assignment of the auxiliary contact elements				1 NO contact for the "tripped by overload" signal 1 NC contact for switching off the contactor			
Rated insulation voltage U_i (pollution degree 3)			V	690			
Rated impulse strength U_{imp}			kV	6			
Contact rating of the auxiliary contact elements							
NC contact with alternating current AC-14/AC-15	Rated operational current I_e at U_e:						
	• 24 V		A	4			
	• 120 V		A	4			
	• 125 V		A	4			
	• 230 V		A	3			
	• 400 V		A	2			
	• 600 V		A	1			
	• 690 V		A	1			
NO contact with alternating current AC-14/AC-15	Rated operational current I_e at U_e:						
	• 24 V		A	4			
	• 120 V		A	4			
	• 125 V		A	4			
	• 230 V		A	3			
	• 400 V		A	2			
	• 600 V		A	1			
	• 690 V		A	1			
NC contact, NO contact with direct current DC-13	Rated operational current I_e at U_e:						
	• 24 V		A	1			
	• 60 V		A	0.22			
	• 110 V		A	0.22			
	• 125 V		A	0.22			
	• 220 V		A	0.11			
Conventional free air thermal current I_{th}			A	6			
Contact reliability (suitable for PLC; 17 V, 5 mA)				Yes			
Short-circuit protection							
With fuse	Performance class	gL/gG	A	6			
		rapid	A	10			
With miniature circuit breaker (C characteristic)			A	6[1])			
Safe isolation between auxiliary conducting paths in acc. with DIN VDE 0106 Part 101			V	300			
Connection of the auxiliary circuit							
Connection type				Screw-type terminal			
Connection characteristics							
•Terminal screw				Pozidriv 2			
•Tightening torque			Nm	0.8 to 1.2			
•Connection cross-sections	Single-core		mm^2	2 x (0.5 to 1.5)			
(min./max.) 1 or 2 conductors			mm^2	2 x (0.75 to 2.5)			
	Finely stranded without wire end ferrule		mm^2	—			
	Finely stranded with wire end ferrule		mm^2	2 x (0.5 to 1.5)			
			mm^2	2 x (0.75 to 2.5)			
	Stranded		mm^2	2 x (0.5 to 1.5)			
			mm^2	2 x (0.75 to 2.5)			
	AWG cables, single- or multi-core		AWG	2 x (18 to 14)			
CSA, UL, CCC rating data							
Auxiliary circuit	Switching capacity			B600, R300			

1) Up to $I_K \leq 0.5$ kA; ≤ 260 V

Type			**3RB10 56**	**3RB10 66**
Frame size			**S6**	**S10/S12**
Width			**120 mm**	**145 mm**
Auxiliary circuit				
Auxiliary contact elements (number x (model)			1 x (1 NO contact + 1 NC contact)	
Assignment of the auxiliary contact elements			1 NO contact for the "tripped by overload" signal	
			1 NC contact for switching off the contactor	
Rated insulation voltage U_i (pollution degree 3)		V	690	
Rated impulse strength U_{imp}		kV	6	
Contact rating of the auxiliary contact elements				
NC contact with alternating current AC-14/AC-15	Rated operational current I_e at U_e:			
	• 24 V	A	4	
	• 120 V	A	4	
	• 125 V	A	4	
	• 230 V	A	3	
	• 400 V	A	2	
	• 600 V	A	1	
	• 690 V	A	1	
NO contact with alternating current AC-14/AC-15	Rated operational current I_e at U_e:			
	• 24 V	A	4	
	• 120 V	A	4	
	• 125 V	A	4	
	• 230 V	A	3	
	• 400 V	A	2	
	• 600 V	A	1	
	• 690 V	A	1	
NC contact, NO contact with direct current DC-13	Rated operational current I_e at U_e:			
	• 24 V	A	1	
	• 60 V	A	0.22	
	• 110 V	A	0.22	
	• 125 V	A	0.22	
	• 220 V	A	0.11	
Conventional free air thermal current I_{th}		A	6[1])	
Contact reliability	(suitable for PLC; 17 V, 5 mA)		Yes	
Short-circuit protection				
With fuse	Performance class gL/gG	A	6	
	rapid	A	10	
With miniature circuit breaker (C characteristic)		A	6[2])	
Safe isolation between auxiliary conducting paths in acc. with DIN VDE 0106 Part 101		V	300	
Connection of the auxiliary circuit				
Connection type			Screw-type terminal	
Connection characteristics				
•Terminal screw			Pozidriv size 2	
•Tightening torque		Nm	0.8 to 1.2	
•Connection cross-sections	Single-core	mm^2	2 x (0.5 to 1.5)	
(min./max.) 1 or 2 conductors		mm^2	2 x (0.75 to 2.5)	
	Finely stranded without wire end ferrule	mm^2	—	
	Finely stranded with wire end ferrule	mm^2	2 x (0.5 to 1.5)	
		mm^2	2 x (0.75 to 2.5)	
	Stranded	mm^2	2 x (0.5 to 1.5)	
		mm^2	2 x (0.75 to 2.5)	
	AWG cables, single- or multi-core	AWG	2 x (18 to 14)	
CSA, UL, CCC rating data				
Auxiliary circuit	Switching capacity		B600, R300	

1) From 60 °C upwards, the conventional thermal current I_{th} across the auxiliary contacts is 2 A.
2) Up to $I_k \leq 0.5$ kA; ≤ 260 V.

Short-circuit protection with fuses for motor feeders with short-circuit currents of up to 50 kA at 690 VAC

								690 V			**415 V**	**600 V**
Overload relay	Contactor	CLASS						Fuse links[1])				
Adjustment range		10			20			NH	Type 3NA	NH	British	
		Rated operating current I_e						DIAZED	Type 5SB	Type 3ND	Standard	
		AC-3 in A at						NEOZED	Type 5SE		Fuses	
								Performance class gL/gG Coordination type[2])		aM	BS88, Type T	
Type	Type	400 V	500 V	690 V	400 V	500 V	690 V	"1"	"2"	"2"	"1"	"2"
Frame size S00												
0.1 A to 0.4 A	3RT10 15[3])	0.4	0.4	0.4	0.4	0.4	0.4	25	2		25	2
3RB10 16												
0.4 A to 1.6 A	3RT10 15[3])	1.6	1.6	1.6	1.6	1.6	1.6	25	6		35	6
3RB10 16												
1.5 A to 6 A	3RT10 15[3])	6	5	4	6	5	4	35	20		35	20
3RB10 16	3RT10 17[3])	6	6	6	6	6	6	35	20		35	20
3 A to 12 A	3RT10 17[3])	12	9	6.3	10	6	6.3	35	20		35	25
3RB10 16												
Frame size S0												
0.1 A to 0.4 A	3RT10 24[3])	0.4	0.4	0.4	0.4	0.4	0.4	63	2		63	2
0.4 A to 1.6 A	3RT10 24[3])	1.6	1.6	1.6	1.6	1.6	1.6	63	6		63	6
1.5 A to 6 A	3RT10 24[3])	6	6	6	6	6	6	63	25	20	63	25
3 A to 12 A	3RT10 24[3])	12	12	12	12	12	12	63	25	20	63	25
3RB10 26												
6 A to 25 A	3RT10 24[3])	12	12	12	12	12	12	63	25	20	63	25
3RB10 26	3RT10 25[3])	17	17	13	16	16	13	63	25	20	63	25
	3RT10 26[3])	25	18	13	16	16	13	100	35	20	63	25
Frame size S2												
6 A to 25 A	3RT10 34[3])	25	25	25	22	22	22	125	63	50	125	63
3RB10 36	3RT10 35[3])	25	25	25	25	25	25	125	63	50	125	63
13 A to 50 A	3RT10 34[3])	32	32	31	22	22	22	125	63	50	125	63
3RB10 36	3RT10 35[3])	40	40	40	29	29	29	125	63	50	125	80
	3RT10 36[3])	50	50	40	32	32	33	160	80	50	125	80
Frame size S3												
13 A to 50 A	3RT10 44[3])	50	50	50	49	49	49	250	100	63	250	100
3RB10 46	3RT10 45[3])	50	50	50	50	50	50	250	100	80	250	100
25 A to 100 A	3RT10 44[3])	65	65	57	49	49	49	250	125	63	250	125
3RB10 46	3RT10 45[3])	80	80	80	53	53	53	250	160	80	250	160
	3RT10 46[3])	95	95	95	59	59	59	250	160	100	250	160
Overload relay	Contactor	CLASS						Fuse links[1])				
Adjustment range		10			20			NH	Type 3NA	NH	British	
Frame size S6												
50 A to 200 A	3RT10 54 [4])	115	115	115	81.7	82	82	355	315	160	250	450
3RB10 56	3RT10 55 [4])	150	150	150	107	107	107	355	315	200	315	500
	3RT10 56 [4])	185	185	170	131	131	131	355	315	200	315	500
Frame size S10/S12												
55 A to 250 A	3RT10 64 [4])	225	225	225	160	160	160	500	400	250	—	700
3RB10 66	3RT10 65 [4])	250	250	265	188	188	188	500	400	315	—	800
	3RT10 66 [4])	250	250	280	213	213	213	500	400	315	—	800
200 A to 540 A	3RT10 65 [4])	265	265	265	188	188	188	500	400	315	—	800
3RB10 66	3RT10 66 [4])	300	300	280	213	213	213	500	400	315	—	800
	3RT10 75 [4])	400	400	400	284	284	284	630	400	400	—	1000
	3RT10 76 [4])	500	500	450	355	355	355	630	500	500	—	1200
	3RT12 64 [4])	225	225	225	225	225	225	500	500	400	—	800
	3RT12 65 [4])	265	265	265	265	265	265	500	500	400	—	800
	3RT12 66 [4])	300	300	300	300	300	300	500	500	400	—	800
	3RT12 75 [4])	400	400	400	400	400	400	800	800	630	—	1200
	3RT12 76 [4])	500	500	500	500	500	500	800	800	630	—	1200
300 A to 630 A	3TF68	630	630	630	440	440	440	800	500	630	500	1200
3RB10 66	3TF69	630	630	630	572	572	572	800	630	630	630	1200

1) Please note the operating voltage.
2) Assignment and short-circuit facilities in acc. with IEC 60 947-4-1/DIN VDE 660 Part 102
Coordination type "1": Contactors or starters must not endanger people or the system in the event of a short circuit. They do not have to be suitable for further operation without repair and part replacement.
Coordination type "2": Contactors or starters must not endanger people or the system in the event of a short circuit and must be suitable for further use. There is a danger of contact welding.
3) Mounting on the contactor is possible after removal of the box terminal block.
4) Mounting on the contactor is possible.

4.7.3 3RB12 electronic overload relays

Type			3RB12 46	3RB12 53	3RB12 57	3RB12 62
Width			**70 mm**	**120 mm**	**145 mm**	**230 mm**
General specifications						
Tripped at			Overload, phase loss, phase imbalance (>40 % in acc. with NEMA), ground fault, and operation of thermistor motor protection[1])			
Tripping class	In acc. with IEC 60 947-4-1	CLASS	5, 10, 15, 20, 25, and 30; adjustable by means of a 6-way rotary switch			
Phase loss sensitivity			Yes			
Overload warning			Yes, as of 1.5 x I_e given a symmetric load, and as of 0.85 x I_e given an asymmetric load			
Resetting and recovery						
Resetting options after tripping			Manual, remote, and automatic resetting [1])			
Recovery time	With automatic RESET	min.	When tripped by overcurrent: 5 (stored permanently) When tripped by thermistor: time until the motor temperature 5K sinks under the operating temperature When tripped by ground fault: no automatic reset			
	With manual RESET	min.	When tripped by overcurrent: 5 (stored permanently) When tripped by thermistor: time until the motor temperature 5K sinks under the operating temperature When tripped by ground fault: immediate			
	With remote RESET	min.	When tripped by overcurrent: 5 (stored permanently) When tripped by thermistor: time until the motor temperature 5K sinks under the operating temperature When tripped by ground fault: immediate			
Configuration						
Indication of operating status on device			Yes, with 3 LEDs; green "Ready" LED, red "Overload" LED, and red "Ground fault" LED [2])			
TEST function			Yes, with combined TEST/RESET button [2])			
RESET button			Yes, with combined TEST/RESET button [2])			
STOP button			Yes, with combined TEST/RESET button [2])			
For the safe operation of motors with increased safety protection	EC special test certificate number in compliance with directive 94/9/EC		PTB 01 ATEX 3220			
Ambient temperatures						
Storage/transportation		°C	-40 to +80			
Operation		°C	-25 to +70			
Temperature compensation		°C	Up to 70			
Permissible rated current at	Internal cubicle temperature of 60 °C	%	100 (current reduction is not required at above +60 °C)			
	Internal cubicle temperature of 70 °C	%	100 (current reduction is not required at above +60 °C)			
Repetition terminals						
Terminal for contactor coil			Not required			
Auxiliary switch repetition terminal			Not required			
Degree of protection	In acc. with IEC 60 529/DIN VDE 0470 Part 1		IP20 (≤ 100 A max. set current I_e IP00 (≤ 100 A max. set current I_e			
Shock protection	In acc. with DIN VDE 0106 Part 100		Protected against finger touch	Protected against finger touch with cover		
Sinus shock resistance	In acc. with IEC 68 Part 2-27	*g*/ms	15/11			
EMC noise immunity						
Conducted disturbance neutralization - burst	In acc. with IEC 61 000-4-4: (corresponds to severity grade 3)	kV	2			
Conducted disturbance neutralization - surge	In acc. with IEC 61 000-4-5: (corresponds to severity grade 3)	kV	2			
Electrostatic discharge	In acc. with IEC 61 000-4-2: (corresponds to severity grade 3)	kV	8			
Field-related disturbance neutralization	In acc. with IEC 61 000-4-3: (corresponds to severity grade 3)	V/m	10			
EMC emitted interference			Limit value class B in acc. with EN 55 011			
Resistance to extreme climates (atmospheric humidity)		%	100			
Dimensions			See dimensional drawings			
Site altitude		m	Up to 2000 above sea level			
Construction type/mounting			Stand-alone installation[3])	Direct mounting/stand-alone installation without additional terminal bracket [4])		

1) Tripped at ground fault only in the case of devices with the order number suffixes 20 and 30 or in conjunction with the external summation current transformer

2) For a detailed explanation, see Section 4.2, "Applications and use".

3) Snap-on attachment to 35 mm rail or screw-on attachment with accessories

4) For screw-on attachment

Type			**3RB12 46**	**3RB12 53**	**3RB12 57**	**3RB12 62**
Width			**70 mm**	**120 mm**	**145 mm**	**230 mm**
Main circuit						
Rated insulation voltage U_i (pollution degree 3)		V	690 (for bare/ non insulated conductors) 1000 (for insulated conductors)	1000		
Rated impulse strength U_{imp}		kV	6	8		
Rated operating voltage U_e		V	690	1000		
Current type	Direct current		No			
	Alternating current		Yes, 50/60 Hz			
Current setting		A	1.25 - 6.3	50 - 205	125 - 500	200 - 820
			Up to 25 - 100			
Power loss per device (max.)		W	Approx. 2			
Short-circuit protection	With fuse, without contactor With fuse and contactor		See the selection and ordering data in the catalog See the technical specifications (short-circuit protection with fuses for motor feeders)			
Safe isolation between main and auxiliary conducting paths	In acc. with DIN VDE 0106 Part 101 IEC 60 947-1-A1	V	Up to 690 V (using main circuit cables with an impulse withstand voltage of 6 kV)	Up to 690		
Connection of the main circuit						
Connection type			Bar-type transformer connection	Bar connection		
Screw-type terminal						
• Terminal screw			—			
• Tightening torque		Nm	—			
• Connection cross-section (min./max.), 1 or 2 conductors	Single-core	mm^2	—			
	Finely stranded without wire end ferrule	mm^2	—			
	Finely stranded with wire end ferrule	mm^2	—			
		mm^2	—			
	Stranded	mm^2	—			
		mm^2	—			
	AWG cables, single- or multi-core	AWG	—			
		AWG	—			
	Ribbon cables (number x width x depth)	mm	—			
Bar connection						
• Terminal screw			—	M8	M10	M 10 or M 12
• Tightening torque		Nm	—	10 to 14	14 to 24	14 to 24 (with M10) 20 to 25 (with M12)
• Connection cross-section (min./max.)	Finely stranded with cable lug	mm^2	—	35 to 95	50 to 240	
	Stranded with cable lug	mm^2	—	50 to 120	70 to 240	185 to 240
	AWG cables, single-core or stranded with cable lug	AWG	—	1/0 to 250 kcmil	2/0 to 500 kcmil	2/0 to 500 kcmil
	With connecting bars (max. width)	mm	—	20 x 4	30 x 6	40 x 8
Bar-type transformer connection						
• Opening diameter		mm	10 (devices ≤ 25 A max. set current I_e) 15 (devices with max. 100 A set current I_e)	—		
• Conductor cross-section	NYY	mm^2	—	—		
	H07RN-F		10/16	—		

Type				3RB12 46	3RB12 53	3RB12 57	3RB12 62
Width				**70 mm**	**120 mm**	**145 mm**	**230 mm**
Auxiliary circuit							
Auxiliary contact elements: number x (variant)				2 x (1 NO contact + 1 NC contact)			
Assignment of the auxiliary contact elements				1 NO contact for the "tripped by overload and/or thermistor" signal 1 NC contact for tripping the contactor			
				1 NO contact for the "tripped by ground fault" signal 1 NC contact for tripping the contactor			
				Or[1]) 1 NO contact for the "tripped by overload and/or thermistor and/or ground fault" signal			
				1 NC contact for switching off the contactor			
				1 NO contact for the "tripped by ground fault" signal 1 NC contact for tripping the contactor			
Rated insulation voltage U_i (pollution degree 3)			V	300			
Rated impulse strength U_{imp}			kV	4			
Contact rating of the auxiliary contact elements							
NC contact with alternating current AC-14/AC-15	Rated operational current I_e at U_e:						
	• 24 V		A	6			
	• 120 V		A	6			
	• 125 V		A	[2])			
	• 230 V		A	3			
	• 400 V		A	1.5			
	• 600 V		A	[2])			
	• 690 V		A	[2])			
NO contact with alternating current AC-14/AC-15	Rated operational current I_e at U_e:						
	• 24 V		A	6			
	• 120 V		A	6			
	• 125 V		A	[2])			
	• 230 V		A	3			
	• 400 V		A	1.5			
	• 600 V		A	[2])			
	• 690 V		A	[2])			
NC contact, NO contact with direct current DC-13	Rated operational current I_e at U_e:						
	• 24 V		A	2			
	• 60 V		A	0.55			
	• 110 V		A	0.25			
	• 125 V		A	0.25			
	• 220 V		A	0.14			
Conventional free air thermal current I_{th}			A	6			
Contact reliability	(suitable for PLC; 17 V, 5 mA)			[2])			
Short-circuit protection							
With fuse	Performance class	gL/gG	A	6			
		rapid	A	10			
With miniature circuit breaker (C characteristic)			A	1.6[3])			
Safe isolation between auxiliary conducting paths in acc. with DIN VDE 0106 Part 101			V	300			

Connection of the auxiliary circuit			
Connection type			Screw-type terminal
Connection characteristics			
•Terminal screw			Pozidriv 2
•Tightening torque		Nm	0.8 to 1.2
•Connection cross-sections	Single-core	mm^2	1 x (0.5 to 4)
(min./max.) 1 or 2 conductors		mm^2	2 x (0.5 to 2.5)
	Finely stranded without wire end ferrule	mm^2	1 x (0.5 to 2.5)
		mm^2	2 x (0.5 to 1.5)
	Finely stranded with wire end ferrule	mm^2	1 x (0.5 to 2.5)
		mm^2	2 x (0.5 to 1.5)
	Stranded	mm^2	—
	AWG cables, single- or multi-core	AWG	Without wire end ferrule: 2 x (20 to 14) 1 x (20 to 12)
			With wire end ferrule: 2 x (20 to 15) 1 x (20 to 14)
CSA, UL, CCC rating data			
Auxiliary circuit	Switching capacity		B600, R300

1) The assignment of the auxiliary contact elements depends on the order number suffix
2) On request
3) Up to $I_K \leq 1000$ A

Short-circuit protection with fuses for motor feeders for short-circuit currents of up to 50 kA at 690 V for 3RB12 and 3UF50

Overload relay	Contactor	CLASS															**690 V**			**415 V**	**600 V**
																	Fuse links[1])				
Adjustment range		5 and 10			15			20			25			30			NH DIAZED NEOZED	Type 3NA Type 5SB Type 5SE	NH Type 3ND	British standards fuses	U_L-listed fuses
		Rated operating current I_e AC-3 in A at															Performance class gL (gG)		aM	BS88 Type T	RK5
																	Coordination type [2])				
(Type)		400 V	500 V	690 V	400 V	500 V	690 V	400 V	500 V	690 V	400 V	500 V	690 V	400 V	500 V	690 V	1	2	2	2	
1.25 - 6.3 A																					
3RB1246-1P	3RT1015	6.3	5	4	6.3	5	4	6.3	5	4	6.3	5	4	6.3	5	4	35	20	—	20	25
	3RT1016	6.3	6.3	5.2	6.3	6.3	5.2	6.3	6.3	5.2	6.3	6.3	5.2	6.3	6.3	5.2	35	20	—	20	25
	3RT1017	6.3	6.3	6.3	6.3	6.3	6.3	6.3	6.3	6.3	6.3	6.3	6.3	6.3	6.3	6.3	35	20	—	20	25
6.3 - 25 A																					
3RB1246-1Q	3RT1015	7	—	—	7	—	—	7	—	—	7	—	—	7	—	—	35	20	—	20	60
	3RT1016	9	6.5	—	9	6.5	—	9	6.5	—	9	6.5	—	9	6.5	—	35	20	—	20	60
	3RT1017	12	9	6.3	11	9	6.3	10	9	6.3	9.5	9	6.3	9	9	6.3	35	20	—	20	60
	3RT1024	12	12	9	12	12	9	12	12	9	12	12	9	12	12	9	63	25	20	25	70
	3RT1025	17	17	13	17	17	13	16	16	13	15	15	13	14	14	13	63	25	20	25	70
	3RT1026	25	18	13	18	18	13	16	16	13	15	15	13	14	14	13	100	25	20	25	100
	3RT1034	25	25	25	25	25	25	22.3	22.3	22.3	20.3	20.3	20.3	19.1	19.1	19.1	125	63	50	63	100
	3RT1035	—	—	—	—	—	—	25	25	25	25	25	25	25	25	25	125	63	50	63	100
25 - 100 A																					
3RB1246-1E	3RT1034	32	32	—	25	25	—	—	—	—	—	—	—	—	—	—	125	63	50	63	125
	3RT1035	40	40	—	33	33	—	29	29	–	28	28	—	26	26		125	63	50	63	150
	3RT1036	50	50	—	38	38	—	32	32	–	29	29	—	26	26	—	160	80	50	80	200
	3RT1044	65	65	47	56	56	47	49	49	47	45	45	45	41	41	41	250	125	63	125	250
	3RT1045	80	80	58	61	61	58	53	53	58	47	47	47	45	45	45	250	160	80	160	250
	3RT1046	95	95	58	69	69	58	59	59	58	53	53	53	50	50	50	250	160	100	160	350
50 - 205 A																					
3RB1253-0F	3RT1054	115	115	115	93	93	93	81	81	81	74	74	74	69	69	69	355	315	160	250	450
	3RT1055	150	150	150	121	121	121	106	106	106	97	97	97	90	90	90	355	315	200	315	500
	3RT1056	185	185	185	149	149	149	131	131	131	120	120	120	111	111	111	355	315	200	315	500
125 - 500 A																					
3RB1257-0K	3RT1064	225	225	225	182	182	182	159	159	159	146	146	146	135	135	135	500	400	250	—	700
	3RT1065	265	265	265	214	214	214	188	188	188	172	172	172	159	159	159	500	400	315	—	800
	3RT1066	300	300	280	243	243	243	213	213	213	195	195	195	180	180	180	500	400	315	—	800
	3RT1075	400	400	400	324	324	324	284	284	84	260	260	260	240	240	240	630	400	400	—	800
	3RT1076	500	500	450	405	405	405	355	355	355	325	325	325	300	300	300	630	500	500	—	1200
	3RT1264	225	225	225	225	225	225	225	225	225	193	193	193	173	173	173	500	500	400	—	800
	3RT1265	265	265	265	265	265	265	265	265	265	227	227	227	204	204	204	500	500	400	—	800
	3RT1266	300	300	300	300	300	300	300	300	300	258	258	258	231	231	231	500	500	400	—	800
	3RT1275	400	400	400	400	400	400	400	400	400	344	344	344	308	308	308	800	800	630	—	1200
	3RT1276	500	500	500	500	500	500	500	500	500	430	430	430	385	385	385	800	800	630	—	1200
	3TF68	500	500	500	500	500	500	440	440	440	408	408	408	376	376	376	800	500[3])	630	500	1200
	3TF69	-	-	-	-	-	-	500	500	500	500	500	500	500	500	500	800	630[3])	630	500	2000
200 - 820 A																					
3RB1262-0L	3TF68 [4])	630	630	630	502	502	502	440	440	440	408	408	408	376	376	376	1000	500[3])	630	500	1200
	3TF69 [4])	820	820	820	662	662	662	572	572	572	531	531	531	500	500	500	1250	630[3])	630	630	2000

1) Please note the operating voltage
3) Please ensure that the safety clearance between the max. 3 AC operating current and the fuse rated current is maintained.
4) Mounting onto contactor possible

2) Assignment and short-circuit facilities in acc. with IEC 60947-4-1/DIN VDE 660 Part 102
Coordination type "1": The contactor or starter must not endanger people or the system in the event of a short circuit. They do not have to be suitable for further operation without repair and part replacement.
Coordination type "2": The contactor or starter must not endanger people or the system in the event of a short circuit and must be suitable for further operation. There is a danger of contact welding.

4.7.4 Terminal bracket for stand-alone installation

Type			**3RU19 16-3AA01**	**3RU19 26-3AA01**	**3RU19 36-3AA01**	**3RU19 46-3AA01**
For overload relays			**3RU11 16**	**3RU11 26**	**3RU11 36**	**3RU11 46**
			3RB10 16	**3RB10 26**	**3RB10 36**	**3RB10 46**
Mounting type			For screw-on and snap-on attachment to a 35 mm DIN rail; frame size S3 also on 75 mm DIN rail			
Connection of the main circuit						
Anschlussart			Screw-type terminal		Screw-type terminal with box terminal	
Connection type						
•Terminal screw			Pozidriv Gr. 2			Allen screw 4 mm
•Connection cross-section (min./max.) 1 or 2 conductors	Single-core	mm^2	1 x (0.5 to 2.5)	1 x (1 to 6)	2 x (0.75 to 16)	2 x (2.5 to 16)
			max. 1 x (to 4)	max. 1 x (to 10)		
	Finely stranded without wire end ferrule	mm^2	—			
	Finely stranded with wire end ferrule	mm^2	1 x (0.5 to 2.5)	1 x (1 to 6)	2 x (0.75 to 16)	2 x (2.5 to 35)
					1 x (0.75 to 25)	1 x (2.5 to 50)
	Stranded	mm^2	1 x (0.5 to 2.5)	1 x (1 to 6)	2 x (0.75 to 25)	2 x (10 to 50)
			max. 1 x (to 4)	max. 1 x (to 10)	1 x (0.75 to 35)	1 x (10 to 70)
	AWG cables, single- or multi-core	AWG	1 x (18 to 14)	1 x (14 to 10)	2 x (18 to 3)	2 x (10 to 1/0)
					1 x (18 to 1)	2 x (10 to 2/0)
	Ribbon cables (number x width x thickness)	mm	—	—	2 x (6 x 9 x 0.8)	2 x (6 x 9 x 0.8)

5

3RA1 Fuseless load feeders/ Combination starters

Section	Subject	Page
5.1	**Specifications/regulations/approvals**	**5-2**
5.2	**Device descriptions**	**5-3**
5.2.1	Mounting systems	5-4
5.2.2	Mounting kits for self-assembly	5-5
5.2.3	Complete devices	5-5
5.3	**Application and areas of use**	**5-7**
5.4	**Accessories**	**5-8**
5.4.1	Accessories for the individual devices	5-8
5.4.2	Accessories specifically for the SIRIUS 3RA fuseless load feeder	5-8
5.4.3	Instructions for self-assembly	5-9
5.5	**Mounting and connection**	**5-18**
5.5.1	Mounting	5-18
5.5.2	Connection	5-21
5.5.3	Circuit diagrams	5-23
5.6	**Dimensional drawings (dimensions in mm)**	**5-24**
5.7	**Technical specifications**	**5-28**

5.1 Specifications/regulations/approvals

Coordination types

The fuseless load feeders/combination starters are manufactured and tested in acc. with IEC 60947 Part 1 and Part 2.
An important selection criterion for the fuseless load feeders/combination starters are the coordination types.
IEC 60947-4-1/DIN VDE 0660 Part 102 draws a distinction between two coordination types, known as coordination type 1 and coordination type 2. They describe what happens at a short circuit and the device status after a short circuit. In both coordination types, the short circuit to be dealt with is reliably disconnected. There must be no damage to systems or injury to persons. The differences lie only in the degree to which the device is damaged after the short circuit.

Coordination type 1

The fuseless load feeder can be inoperable after each short-circuit disconnection. Damage to the contactor and the circuit breaker/MSP is permissible.

Coordination type 2

After a short-circuit disconnection, there must not be any damage to the overload release or any other part. The 3RA1 fuseless load feeder can be put into operation again without the need for replacement. Only welding of the contactor contacts is permissible if they can be separated easily without any significant deformation.

Approvals/test reports

All the approvals and test certificates of the individual devices used in the feeders are valid.

UL/CSA

When connected to a SIRIUS contactor the 3RV Motor Starter Protectors are UL Listed and CSA certified for the following motor switching applications:

- Starter for Group Installation per N.E.C. 430-53
- Combination Motor Controller, Type F. A Type F Combination Motor Controller is an assembly made up of a Type E, Self-protected Manual Combination Motor Controller and a contactor. See 2.4.6 "Terminals for Combination Type E in acc. with UL 508" for more information.

5.2 Device descriptions

Fuseless load feeders/combination starters up to 100 A are combinations of devices consisting of a 3RV circuit breaker/MSP for overload and short-circuit protection and a 3RT contactor for normal switching duty.
The different components can be assembled separately and electrically wired with individual cables. It is of course simpler to connect the circuit breakers/MSPs and contactors mechanically and electrically using ready-made kits.

As an alternative, we offer the pre-assembled 3RA fuseless load feeders/combination starters. In the smaller frame sizes these combinations can be mounted directly to DIN rail. The combinations for high ratings come with mounting adapters for DIN rail mounting or on busbar adapter shoes (Fastbus).

Subsequently you'll receive a detailed overview the 3RA fuseless load feeders/combination starters product spectrum. Depending on the design these meet coordination type "1" or "2".

Device variants

The fuseless load feeders/combination starters can be set up in 4 frame sizes:

- Frame size S00: width 45 mm; for three-phase induction motors up to 0.75 kW / 400 V, coordination type "2" and 5.5 kW / 400 V, coordination type "1"
- Frame size S0: width 45 mm; for three-phase induction motors up to 7.5 kW / 400 V, coordination type "2" and 11 kW / 400 V, coordination type "1"
- Frame size S2: width 55 mm; for three-phase induction motors up to 22 kW / 400 V, coordination type "2" and coordination type "1"
- Frame size S3: width 70 mm; for three-phase induction motors up to 45 kW / 400 V, coordination type "2" and coordination type "1"

5.2.1 Mounting systems

The possible types of mounting are as follows:

- On a 35 mm rail in acc. with EN 50 022
- Screw-on attachment by means of the attachment openings integrated in the rail adapter
- On busbar systems with a busbar center-to-center clearance of 40 mm or 60 mm

The following illustrations show the adapters for rail and busbar mounting:

Rail adapter

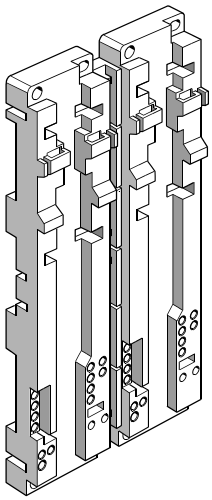

Busbar adapter

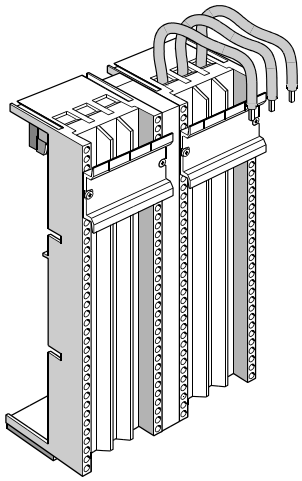

Fig. 5-1: Rail adapter/busbar adapter

5.2.2 Mounting kits for self-assembly

Because SIRIUS is a modular system, the standard devices fit together optimally both mechanically and electrically. The fuseless load feeders/combination starters can therefore be assembled quickly and easily in all four frame sizes. To this end, the circuit breaker/MSP and the contactor are connected using the corresponding kit.

Kits

There are kits for reversing feeders for mounting on:

- Rail — frame sizes S0, S2, S3: mounting kit for reversing operation
  frame size S00: wiring kit for reversing operation
- Busbars — frame sizes S00, S0, S2: mounting kit for reversing operation

The following illustration shows how to assemble the fuseless load feeder of frame size S00 for reversing operation and rail mounting:

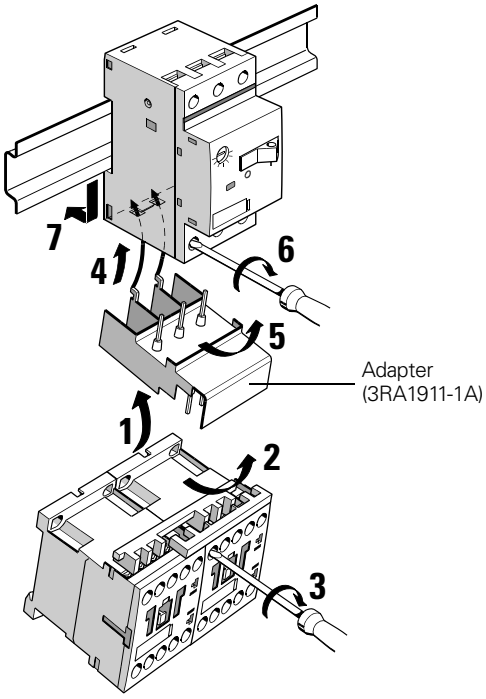

Fig. 5-2: Self-assembly of a fuseless load feeder (frame size S00)

5.2.3 Complete devices

The fuseless load feeders/combination starters are also available fully assembled:

- Up to 22 kW in the case of direct starters
- Up to 11 kW in the case of reversing starters

Control supply voltage

For control voltages of:
- 230 V AC / 50 Hz
- 24 V DC

Self-assembly on rails or busbar systems is recommended for other control voltages.

Auxiliary contact elements

- Direct feeders
  The contactors of frame size S00 include a normally open contact
- Reversing feeders
  S00/S0: electrical and mechanical interlocking

5.3 Application and areas of use

The fuseless load feeders/combination starters can be used in electrical installations wherever combinations of fuses, contactors, and overload relays have been used up to now. The greater functionality of the circuit breaker/MSP over fuses, and their suitability as emergency-stop and disconnecting switches, means that many requirements can be met more easily with a fuseless load feeder.

5.4 Accessories

5.4.1 Accessories for the individual devices

The accessories for the individual devices can also be used in the load feeder.
You will find information on the accessories of the contactors in Chapter 3, "Contactors" (Section 3.4, "Accessories").

You will find information on the accessories of the circuit breakers/MSPs in Chapter 2, (Section 2.4, "Accessories").

5.4.2 Accessories specifically for the SIRIUS 3RA fuseless load feeder

The following accessories facilitate the setup and wiring of the fuseless load feeder:

Accessory	Description
Auxiliary switch for the circuit breaker/MSP	• Transverse and connectable from above • 1 changeover contact, 1 normally open contact + 1 normally closed contact or 2 normally open contacts
Auxiliary switch blocks for the contactor	Snap-on and connectable from below
Link modules	• Provide electrical connections between circuit breakers/MSPs and contactors • Also provide a mechanical connection in frame sizes S00 and S0
Wiring kits	• Electrical and mechanical connection for reversing combinations • The wiring kit can be combined with the link module • In the case of frame size S00, the wiring module contains integrated cables for electrical interlocking

Table 5-1: Fuseless load feeder, accessories

5.4.3 Instructions for self-assembly

Fuseless load feeder for rail mounting

Assembly

The following illustration and the table below it show how to assemble the fuseless load feeder:

- Rail mounting
- Frame size S00
- Reversing operation

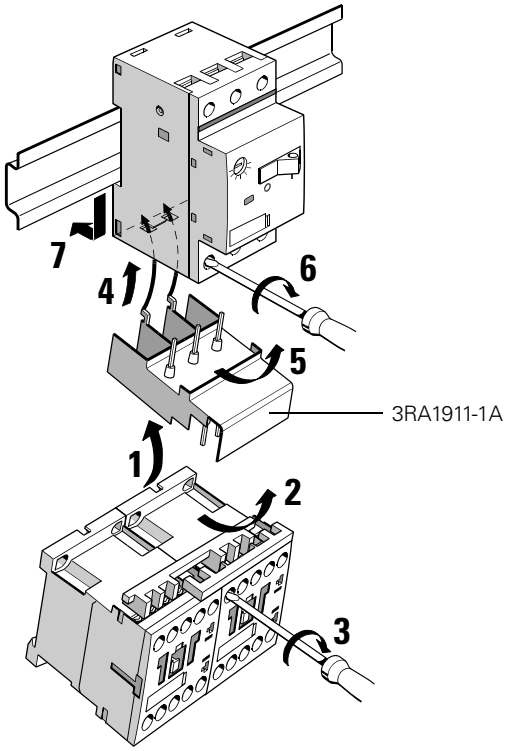

Fig. 5-3: Self-assembly, rail, reversing operation (frame size S00)

Step	Procedure
1	Hook the back of the right contactor of the contactor combination onto the link module
2	With a tilting movement, insert the connecting pins of the link module into the upper terminal openings of the contactor
3	Tighten the upper terminal screws of the contactor
4	Hook the link module onto the back of the circuit breaker/MSP
5	With a tilting movement, insert the connecting pins of the link module into the lower terminal openings of the circuit breaker/MSP
6	Tighten the lower terminal screws of the circuit breaker/MSP
7	Snap the circuit breaker/MSP and thus the feeder onto the rail

Table 5-2: Self-assembly of the reversing starter for rail (frame size S00)

The following illustrations show how to assemble the fuseless load feeder:

- Rail mounting
- Frame sizes S00 to S3
- Direct starters

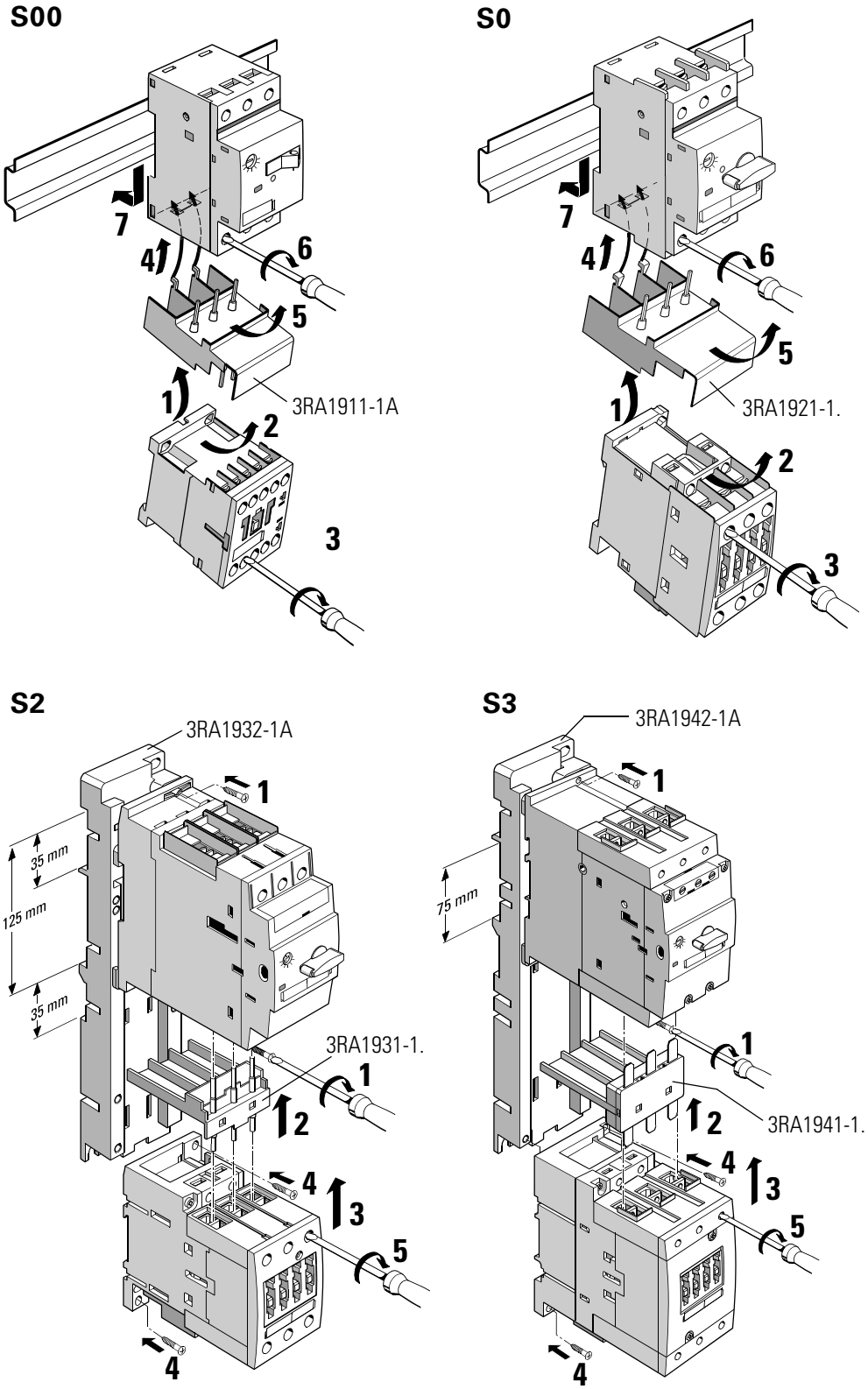

Fig. 5-4: Self-assembly, rail, direct starter (frame sizes S00 to S3)

The following illustrations show how to assemble the fuseless load feeder:
- Rail mounting
- Frame sizes S00 with Cage Clamp terminal system

Direct starter

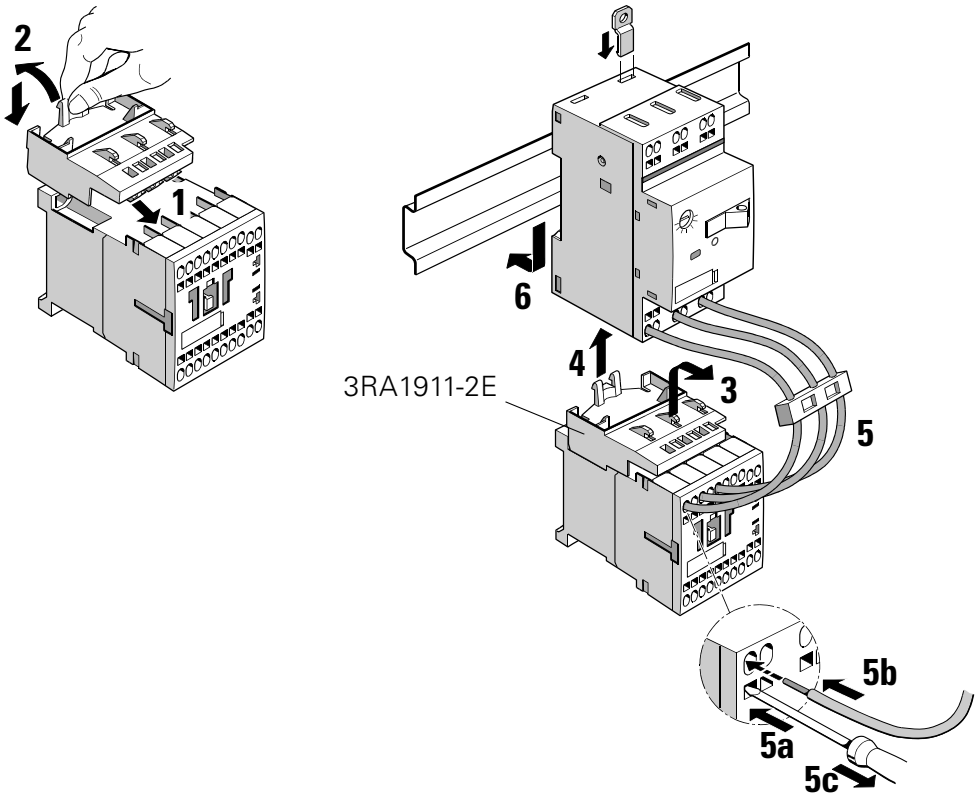

Fig. 5-5: Self-assembly, rail, direct starter (frame size S00, Cage Clamp)

The following illustrations show how to assemble the fuseless load feeder:

- Rail adapter
- Reversing operation
- Frame size S0

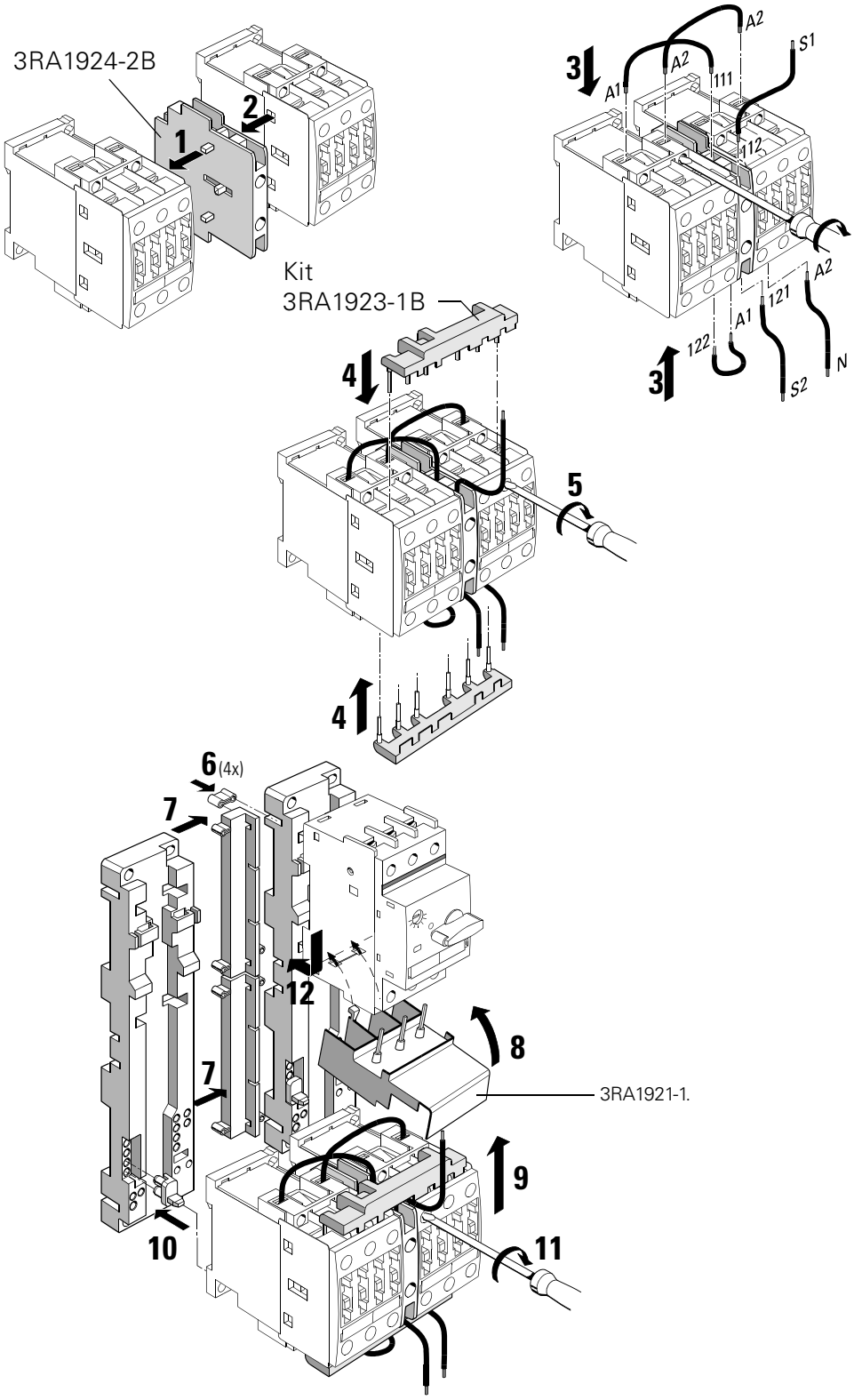

Fig. 5-6: Self-assembly, rail, reversing operation (frame size S0)

The following illustrations show how to assemble the fuseless load feeder:

- Rail adapter
- Reversing operation
- Frame size S2 (assembly of frame size S3 is analogous)

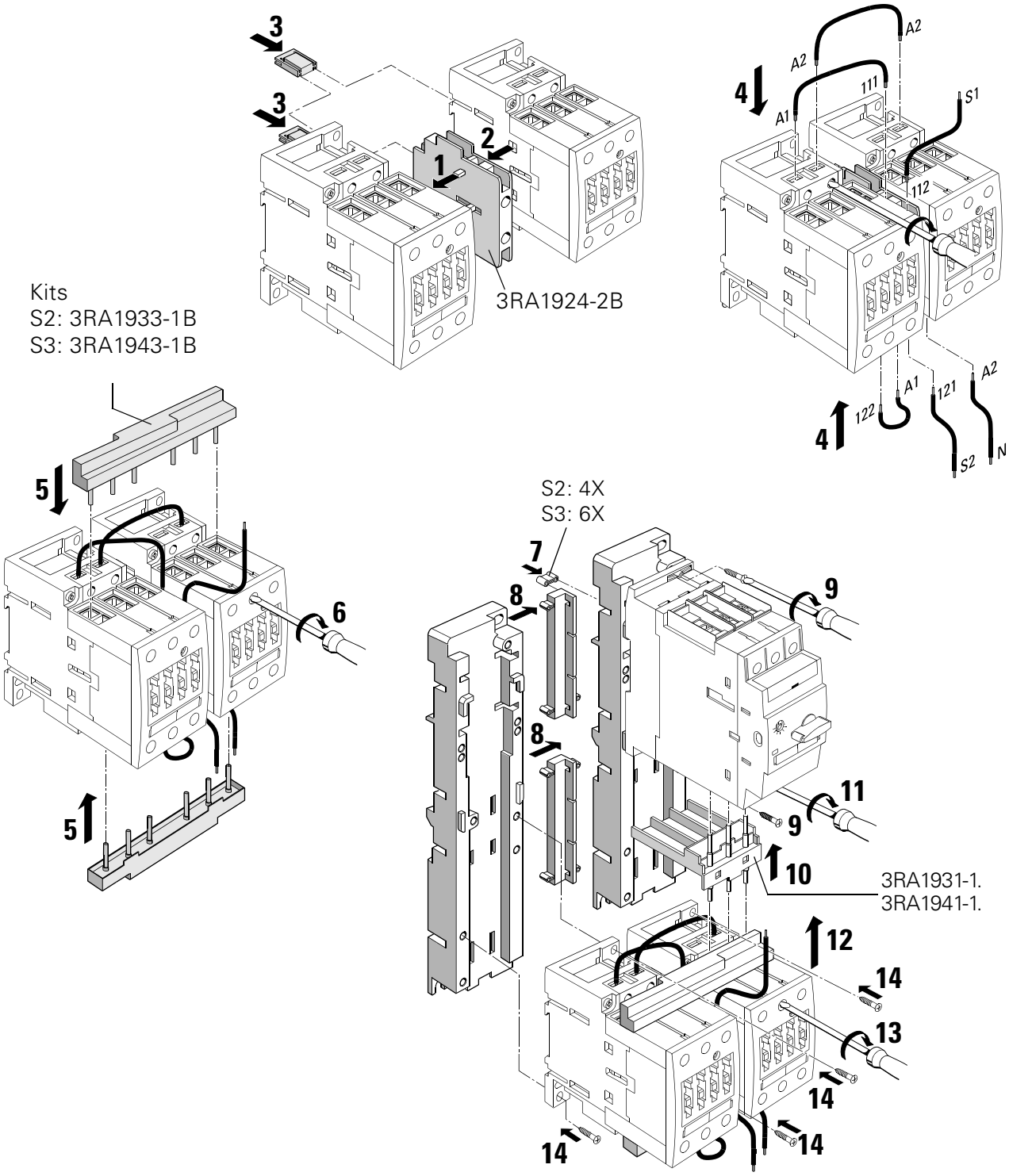

Fig. 5-7: Self-assembly, rail, reversing operation (frame sizes S2 and S3)

Fuseless load feeders/combination starters for busbar mounting

There are kits available for reversing operation for frame sizes S00 to S2. The fuseless load feeders/combination starters of frame size S3 are not suitable for busbar mounting.

Direct starters of frame sizes S00 to S2

The following illustrations show how to assemble the fuseless load feeder:

- Busbar adapter
- Direct starters
- Frame sizes S00 to S2

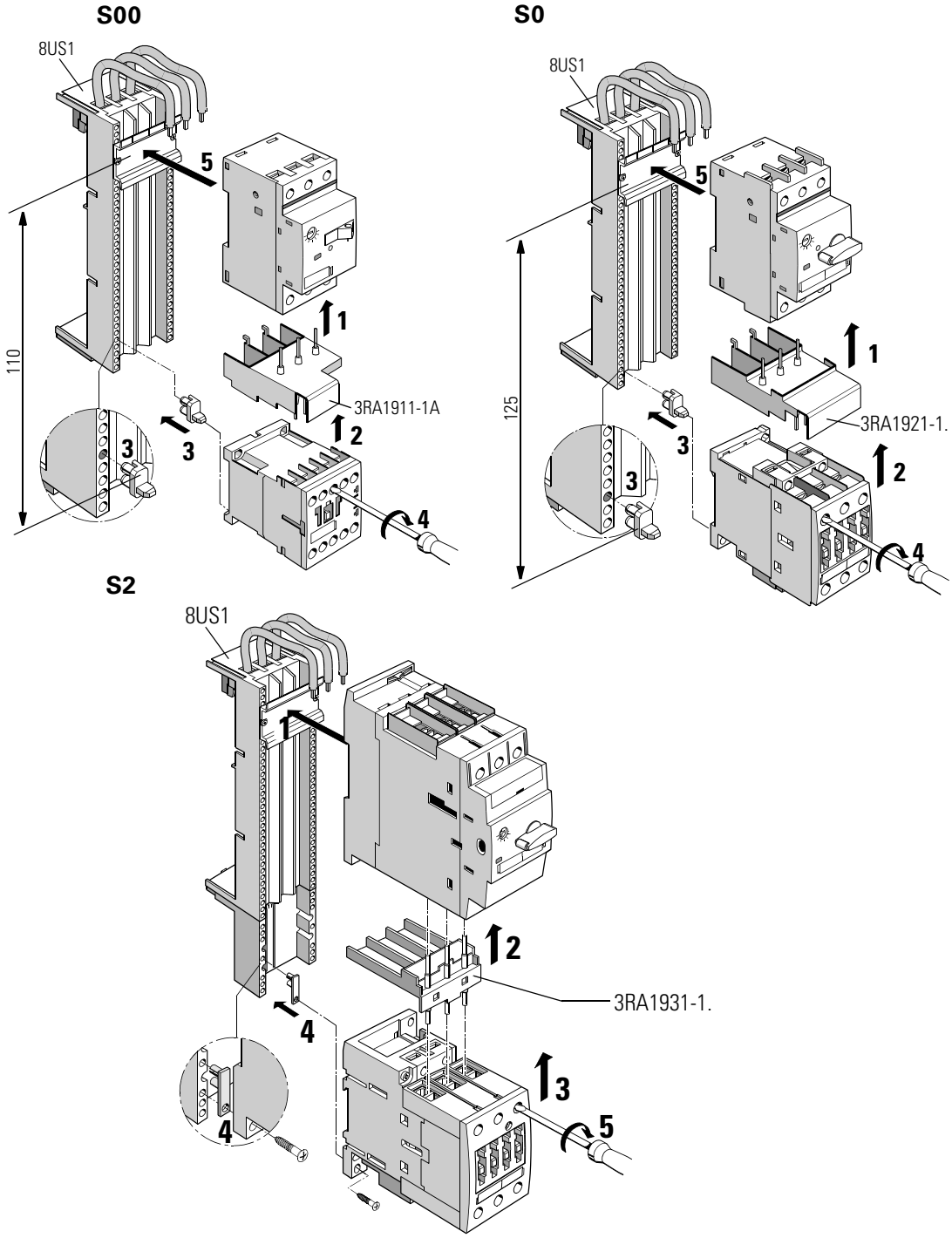

Fig. 5-8: Self-assembly, busbars, direct starters (frame sizes S00 and S2)

The following illustrations show how to assemble the fuseless load feeder:
- Busbar adapter
- Direct starters
- Frame sizes S00 and S0 with Cage Clamp terminal system

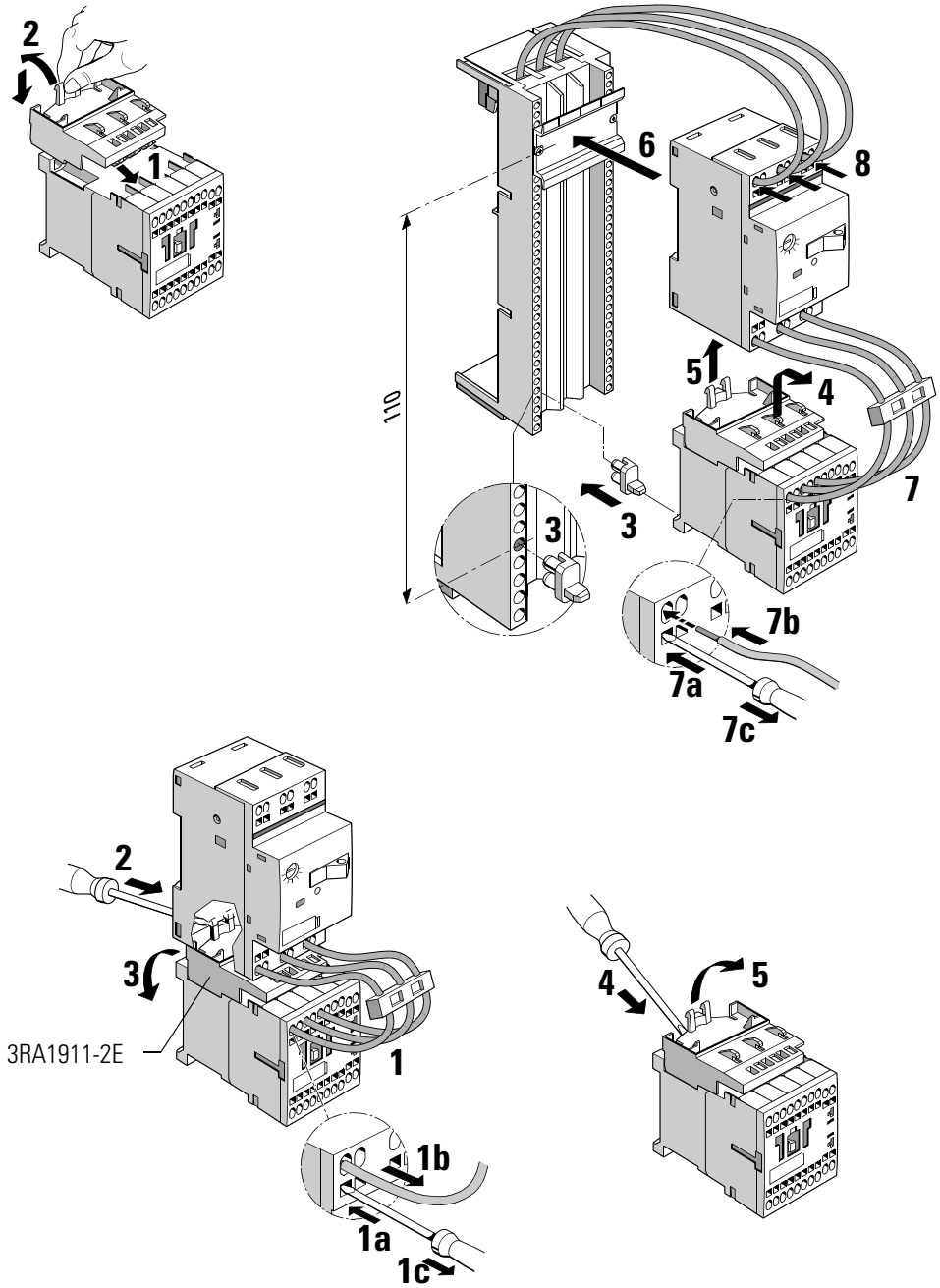

Fig. 5-9: Self-assembly, busbars, direct starters (frame sizes S00/S0, Cage Clamp)

Reversing operation of frame sizes S00 to S2

The following illustrations show how to assemble the fuseless load feeder:
- Busbar adapter
- Reversing operation
- Frame sizes S00 to S2

S00

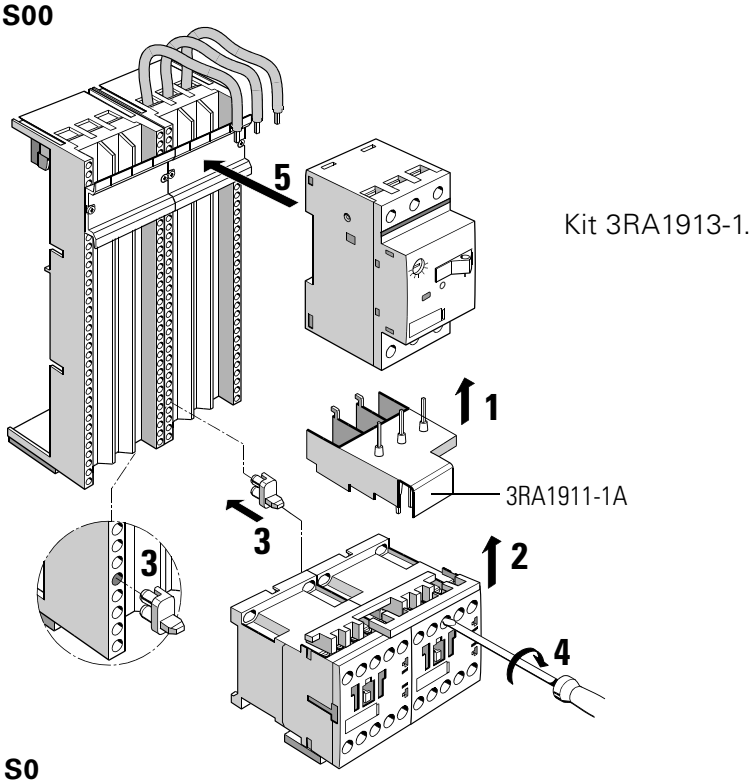

S0

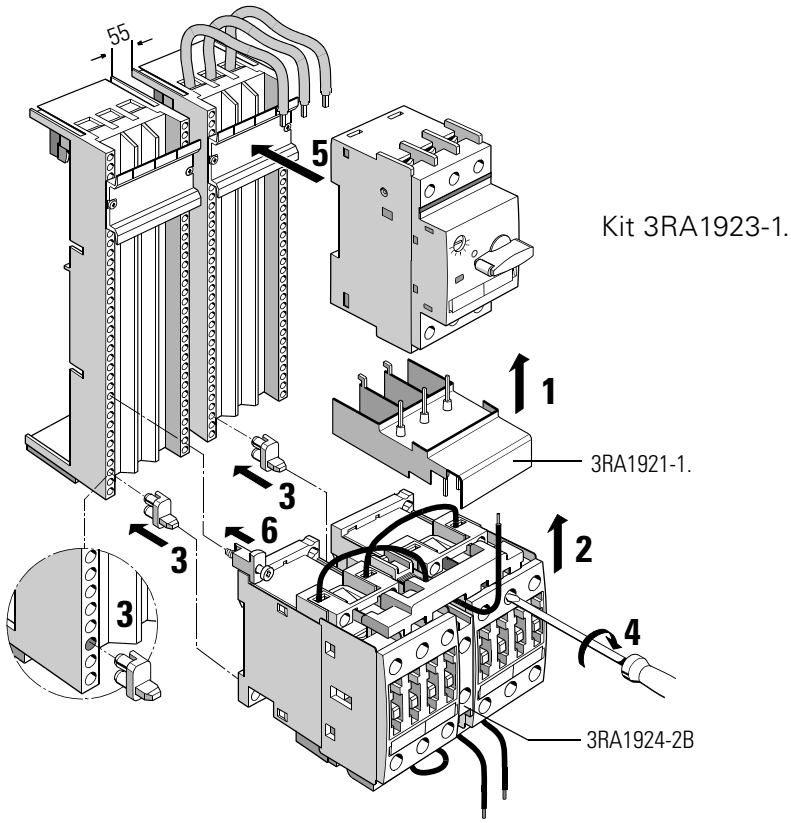

Fig. 5-10: Self-assembly, busbars, reversing operation (frame sizes S00 and S0)

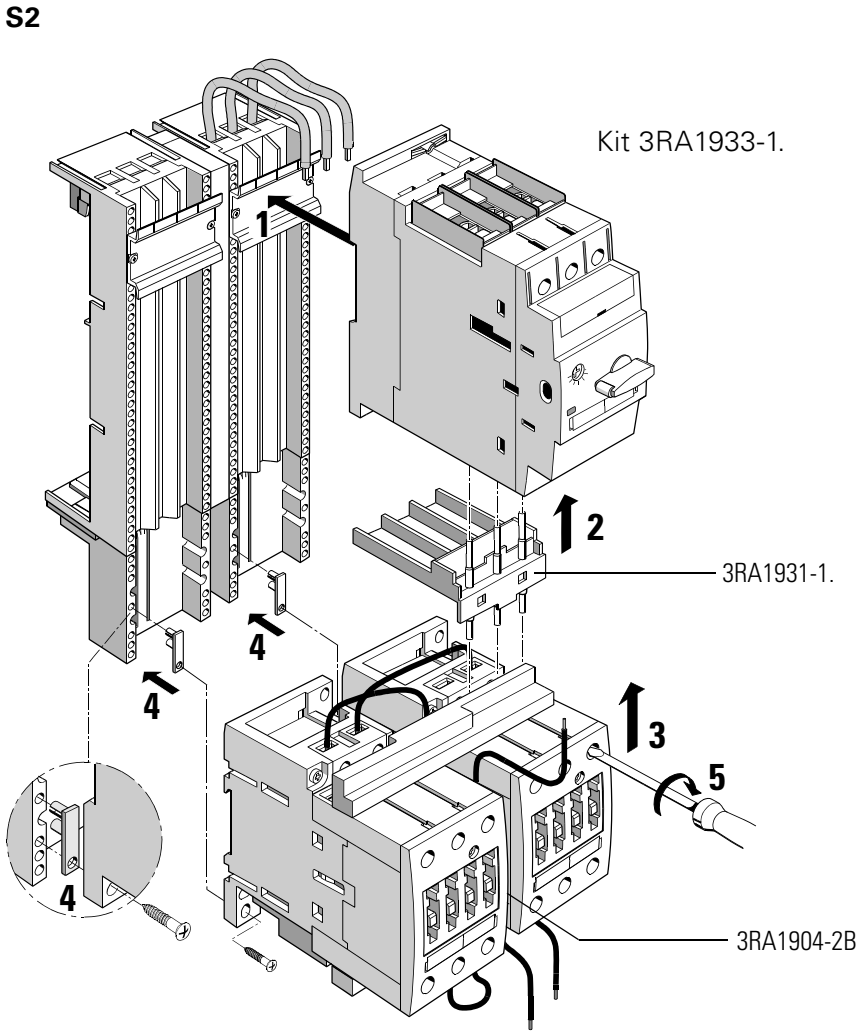

Fig. 5-11: Self-assembly, busbars, reversing operation (frame size S2)

5.5 Mounting and connection

5.5.1 Mounting

Snap-on attachment

The fuseless load feeders/combination starters can be snapped onto a 35 mm rail in acc. with EN 50 022.

Rail mounting without adapter

The fuseless direct feeders of frame sizes S00 and S0 and reversing feeders S00 can be snapped onto the rail without an adapter by mounting the circuit breaker/MSP. No tools are required for either mounting or removal.
A rail adapter is available as an accessory for frame sizes S00/S0. The reversing feeders of frame sizes S2/S3 are mounted with a rail adapter.

Rail mounting with adapter

To mount frame sizes S2 and S3 and reversing feeders S0 on a rail, adapters must be used for stability reasons. These are available as accessories. To remove them, the rail adapter is unlocked with a screwdriver. You will find information on this in Section 2.5.1 on how to mount circuit breakers/MSPs.

All feeders can be mounted with a rail adapter.

Screw-mount attachment

A screw-mount attachment is implemented in the case of sizes S00 and S0 by means of push-in lugs (see Section 2.4 for information on circuit-breaker accessories).
In the case of sizes S2 and S3, the holes for screw-mount attachment are integrated in the mandatory rail adapter.
The following illustration shows screw-mount attachment by means of push-in lugs in the case of the fuseless load feeder of frame size S00:.

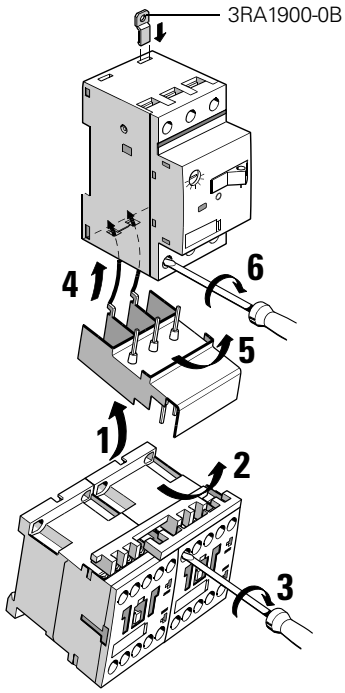

Fig. 5-12: Screw-mount attachment, fuseless load feeder (frame size S00)

Important
In the case of screw-mount attachment without a rail adapter, the feeder must not be screwed onto a conductive surface. Insulation is necessary so that, in the event of a short circuit of the circuit breaker/MSP, there is no short circuit to the base plate.

Busbar mounting

The following illustrations show busbar mounting and removal of the fuseless load feeders/combination starters S00 to S2.

S00 (S0): Mounting

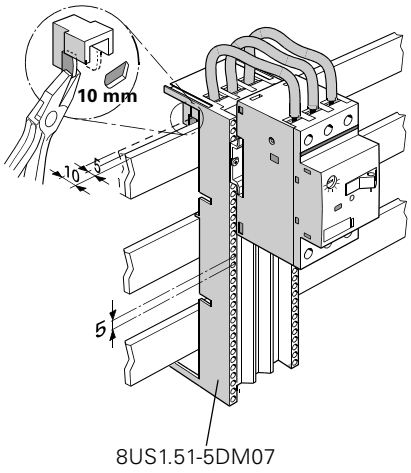

S00 (S0): Removal

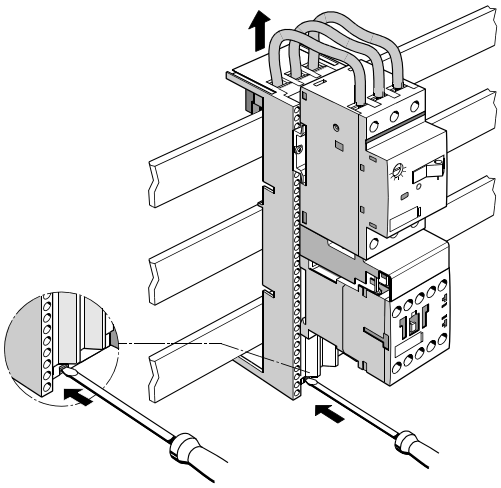

S2: Mounting

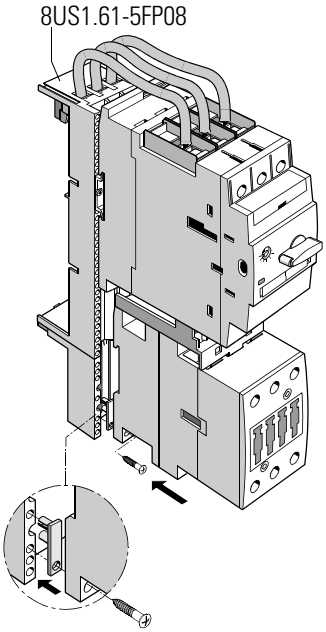

Removal of the extension piece

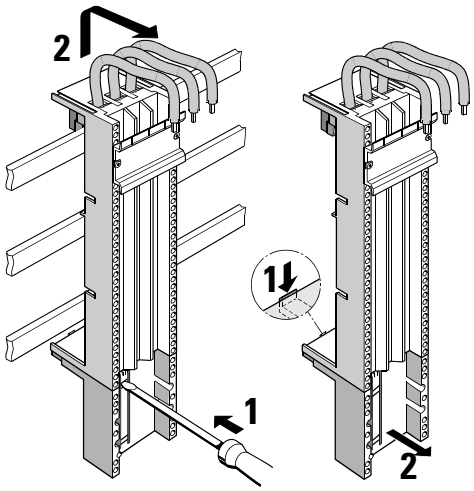

Fig. 5-13: Busbar system, mounting/removal (frame sizes S00 to S2)

5.5.2 Connection

The fuseless load feeders/combination starters are available with the SIGUT® terminal system.

Conductor cross-sections

The following table gives the permissible conductor cross-sections for fuseless load feeders. The specifications apply to main and auxiliary connections.

Frame sizes S00 and S0

	S00 A1/A2; NO/NC L1 L2 L3 T1 T2 T3	S0	
		A1/A2; NO/NC	L1 L2 L3 T1 T2 T3
∅ 5 ... 6 mm / PZ2	0.8 to 1.2 Nm 7 to 10.3 lb.in	0.8 to 1.2 Nm 7 to 10.3 lb.in	2 to 2.5 Nm 18 to 22 lb.in
10	2 x (0.5 to 1.5 mm²) 2 x (0.75 to 2.5 mm²)	2 x (0.5 to 1.5 mm²) 2 x (0.75 to 2.5 mm²)	2 x (1 to 2.5 mm²) 2 x (2.5 to 6 mm²)
10	2 x (0.5 to 2.5 mm²)	2 x (0.5 to 2.5 mm²)	2 x (1 to 2.5 mm²) 2 x (2.5 to 6 mm²)
AWG	2 x (18 to 14)	2 x (18 to 14)	2 x (14 to 10)

Table 5-3: Conductor cross-sections (frame sizes S00/S0)

Frame size S2

S2			
A1/A2; NO/NC		L1 L2 L3 T1 T2 T3	
∅ 5 ... 6 mm / PZ2	0.8 to 1.2 Nm 7 to 10.3 lb.in	∅ 5 ... 6 mm / PZ2	3 to 4.5 Nm 27 to 40 lb.in
10	2 x (0.5 to 1.5 mm²) 2 x (0.75 to 2.5 mm²)	13	2 x (0.75 to 16 mm²)
10	2 x (0.5 to 2.5 mm²)	13	2 x (0.75 to 16 mm²) 1 x (0.75 to 25 mm²)
—	—	13	2 x (0.75 to 25 mm²) 1 x (0.75 to 35 mm²)
AWG	2 x (18 to 14)	**AWG**	2 x (18 to 3) 1 x (18 to 2)

Table 5-4: Conductor cross-sections (frame size S2)

Frame size S3

S3			
A1/A2; NO/NC		**L1, L2, L3 T1,T2,T3**	
∅ 5 ... 6 mm / PZ2	0.8 to 1.2 Nm 7 to 10.3 lb.in	min 22 4	4 to 6 Nm 35 to 53 lb.in
10	2 x (0.5 to 1.5 mm²) 2 x (0.75 to 2.5 mm²)	17	2 x (2.5 to 16 mm²)
10	2 x (0.5 to 2.5 mm²)	17	2 x (2.5 to 35 mm²) 1 x (2.5 to 50 mm²)
—	—	17	2 x (10 to 50 mm²) 1 x (10 to 70 mm²)
AWG	2 x (18 to 14)	**AWG**	2 x (10 to 1/0) 1 x (10 to 2/0)

Table 5-5: Conductor cross-sections (frame size S3)

5.5.3 Circuit diagrams

Direct starters

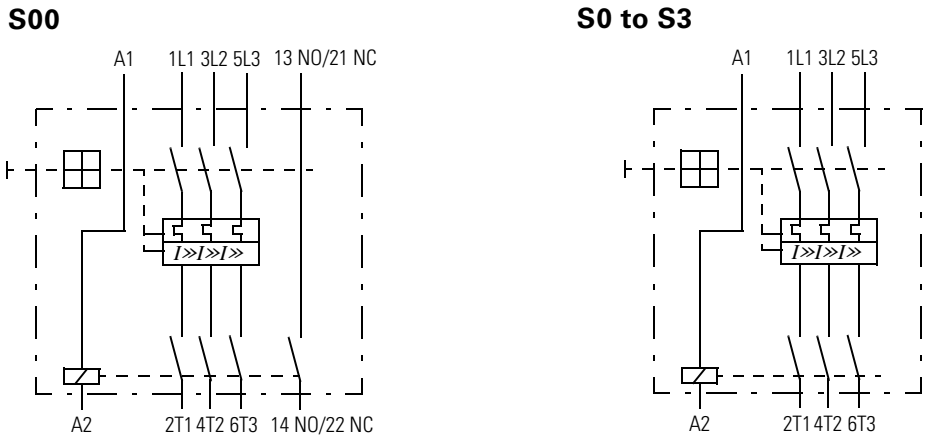

Fig. 5-14: Circuit diagrams, direct starters (frame sizes S00 to S3)

Reversing starters

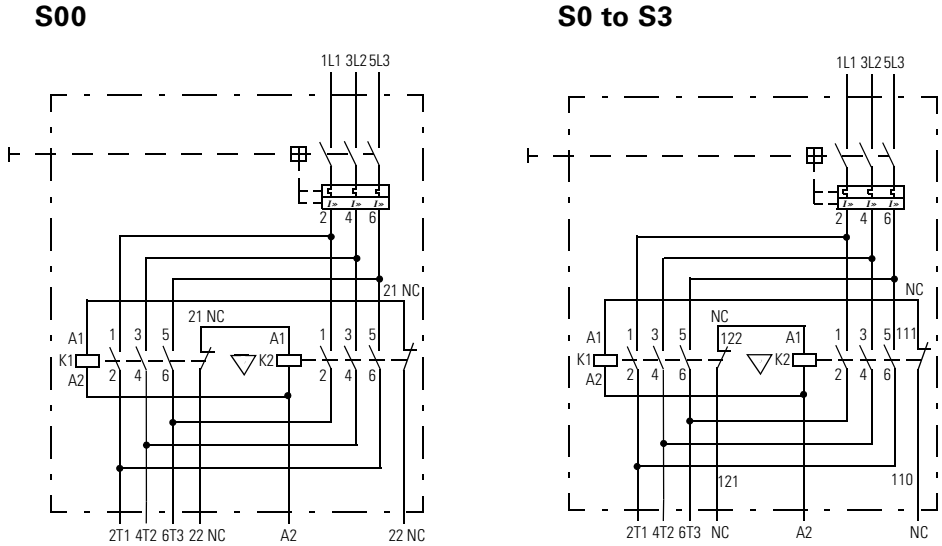

Fig. 5-15: Circuit diagrams, reversing starters (frame sizes S00 to S3)

5.6 Dimensional drawings (dimensions in mm)

3RA1 fuseless load feeders/combination starters - frame size S00 for rail

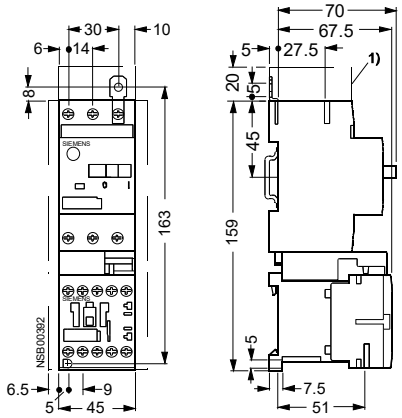

Fig. 5-16: 3RA11 10-..A.. for direct-on-line starting
1) Space above the arc chute
Clearance to grounded parts at the side at least 6 mm

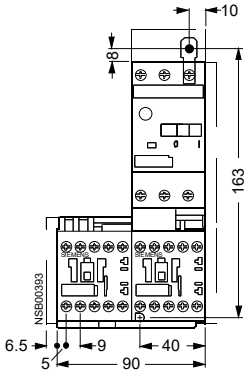

Fig. 5-17: 3RA12 10-..A.. for reversing operation

3RA1 fuseless load feeders/combination starters - frame size S00 for 40 mm and 60 mm busbar systems

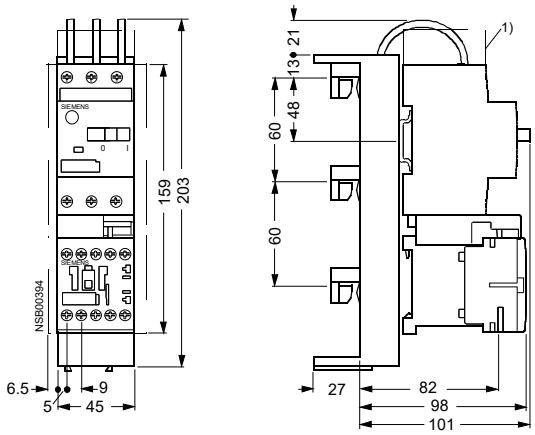

Fig. 5-18: 3RA11 10-..C.., 3RA11 10-..D.. for direct-on-line starting
1) Space above the arc chute
Clearance to grounded parts at the side at least 6 mm

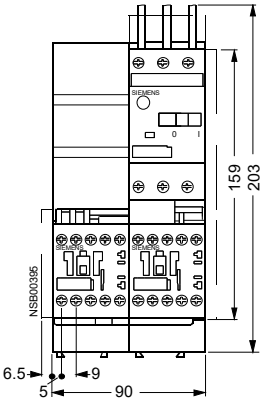

Fig. 5-19: 3RA12 10-..C.., 3RA12 10-..D.. for reversing operation

3RA1 fuseless load feeders/combination starters - frame size S0 for rail

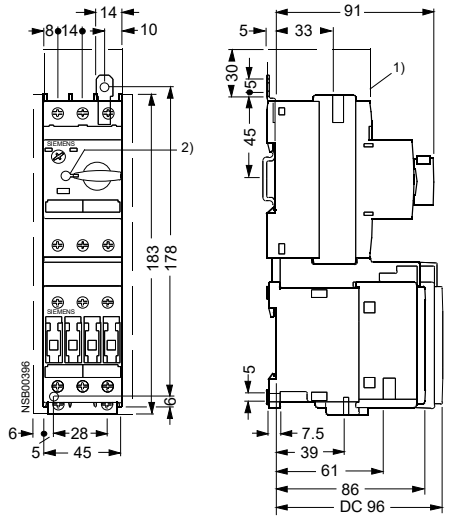

Fig. 5-20: 3RA11 20-..A.. for direct-on-line starting

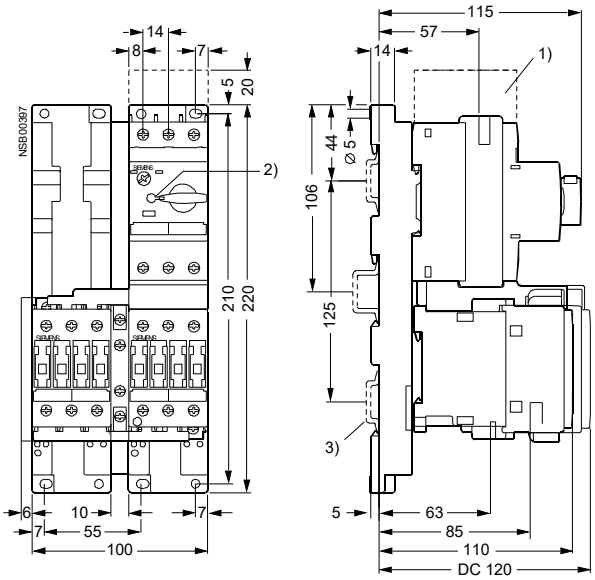

Fig. 5-21: 3RA12 20-..B.. for reversing operation

1) Space above the arc chute
2) Lockable in zero position with a shackle diameter of 5 mm
3) Attached using two 35 mm rails with a depth of 7.5 mm in acc. with EN 50 022 or one 75 mm rail in acc. with EN 50 023.
Clearance to grounded parts at the side at least 6 mm

3RA1 fuseless load feeders/combination starters - frame size S0 for 40 mm and 60 mm busbar systems

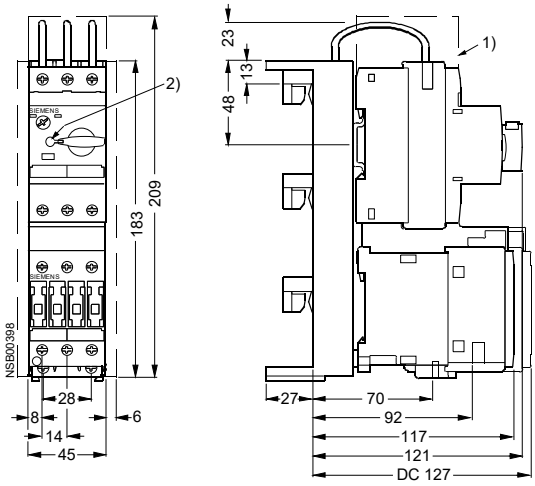

Fig. 5-22: 3RA11 20-..C.., 3RA11 20-..D.. for direct-on-line starting

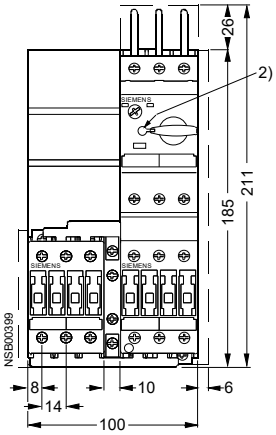

Fig. 5-23: 3RA1220-..C.., 3RA1120-..D.. for reversing operation

1) Space above the arc chute
2) Lockable in zero position with a shackle diameter of 5 mm
Clearance to grounded parts at the side at least 6 mm

3RA1 fuseless load feeders/combination starters - frame size S2 for rail

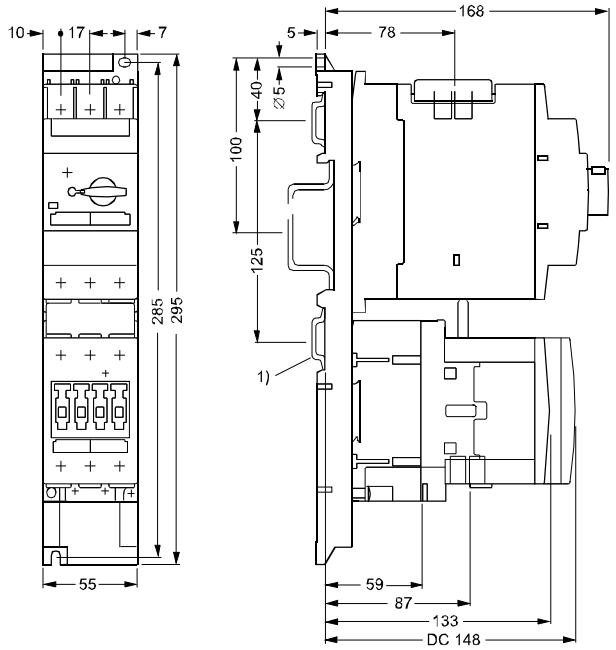

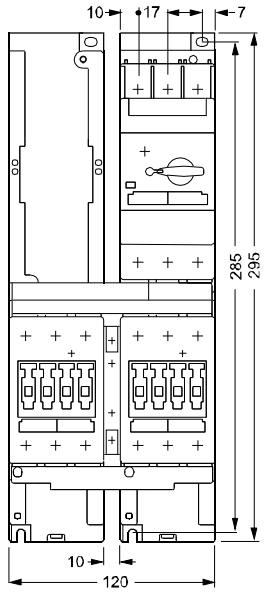

Fig. 5-24: 3RA1 direct-on-line starting (frame size S2)

Fig. 5-25: 3RA1 reversing operation (frame size S2)

1) Space above the arc chute
2) Lockable in zero position with a shackle diameter of 5 mm
3) Attached using two 35 mm rails with a depth of 7.5 mm in acc. with EN 50 022 or one 75 mm rail in acc. with EN 50 023.
Clearance to grounded parts at the side at least 6 mm

3RA1 fuseless load feeders/combination starters - frame size S0 for 40 mm and 60 mm busbar systems

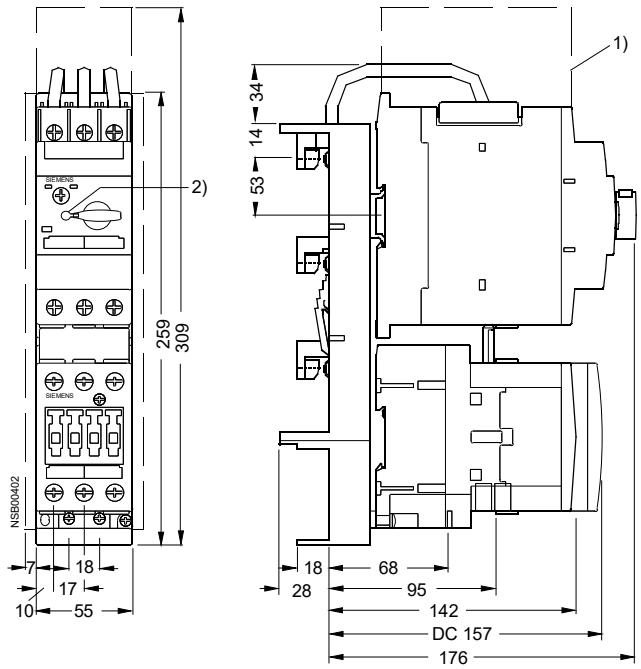

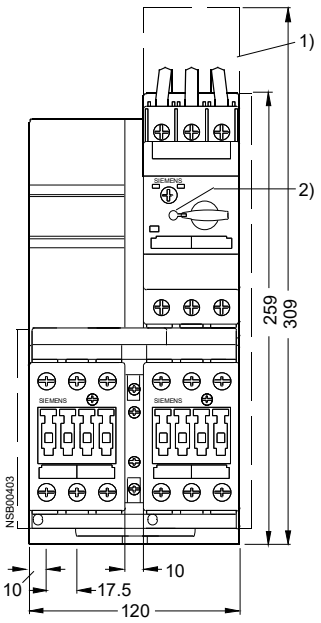

Fig. 5-26: 3RA1 direct-on-line starting (frame size S0)

Fig. 5-27: 3RA1 reversing operation (frame size S0)

1) Space above the arc chute
2) Lockable in zero position with a shackle diameter of 5 mm
Clearance to grounded parts at the side at least 6 mm

3RA1 fuseless load feeders/combination starters - frame size S3 for rail

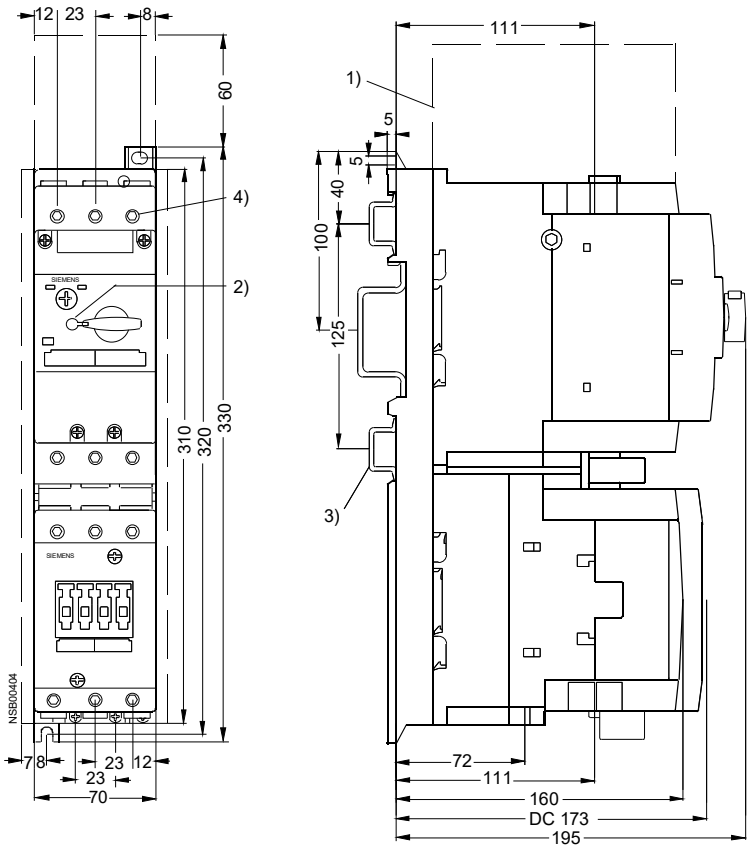

Fig. 5-28: 3RA1 direct-on-line starting (frame size S3)

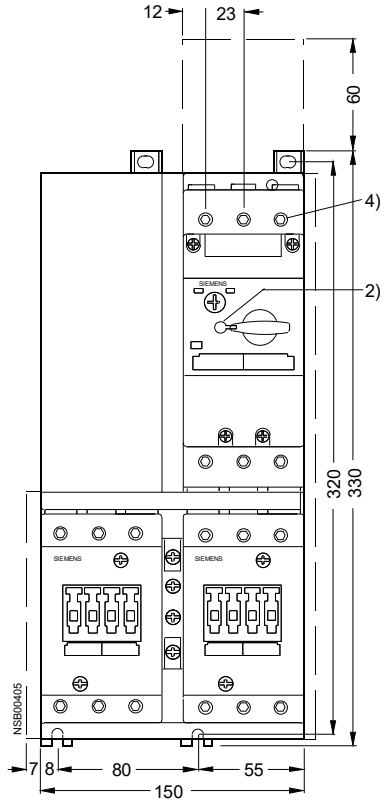

Fig. 5-29: 3RA1 reversing operation (frame size S3)

1) Space above the arc chute
2) Lockable in zero position with a shackle diameter of 5 mm
3) Attached using two 35 mm rails with a depth of 7.5 mm in acc. with EN 50 022 or one 75 mm rail in acc. with EN 50 023.
4) Hexagonal socket 4 mm
Clearance to grounded parts at the side at least 6 mm

5.7 Technical specifications

Installation regulations for 400/500 V AC

When installing the combinations, the following clearances must be maintained to grounded parts:

circuit breakers/MSPs combined with contactors — Clearances to grounded or live parts

Circuit breaker	Contactor	Rated operational voltage	Y mm	X2[1]) mm	Z mm
3RV1. 1 with	3RT10 1	400/500 V	20	10	9
3RV1. 2 with	3RT10 1	400/500 V	30	10	9
	3RT1 .2	400/500 V	30	10	9
	3RT1 .3	400/500 V	30	10	9
3RV1. 3 with	3RT10 2	400/500 V	50	10	10
	3RT1 .3	400/500 V	50	10	10
	3RT10 4	400/500 V	50	10	10
3RV1. 4 with	3RT10 4	400 V	90	10	12
	3RT10 4	500 V	220	10	20

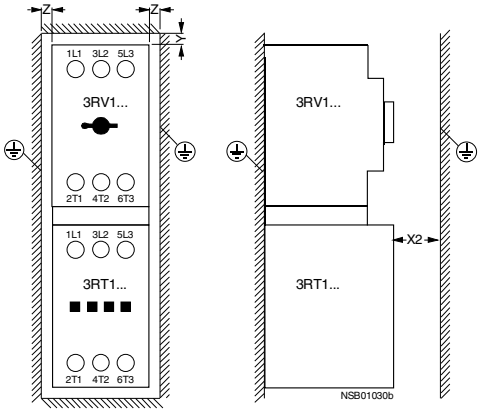

1) Minimum clearance to the contactor at the front. A minimum clearance at the front is not required for a circuit breaker/MSP.

Installation regulations for 690 V AC

Frame size	Format
S0	Mounted on an insulated base plate. In screw-on mounting, the screws must not be grounded. Alternatively, the rail adapter can be used without restrictions.
S2/S3	Mounted on an insulated base plate. Alternatively, the rail adapter can also be used.

Standard format for frame sizes S0 to 5.5 kW, S2, and S3

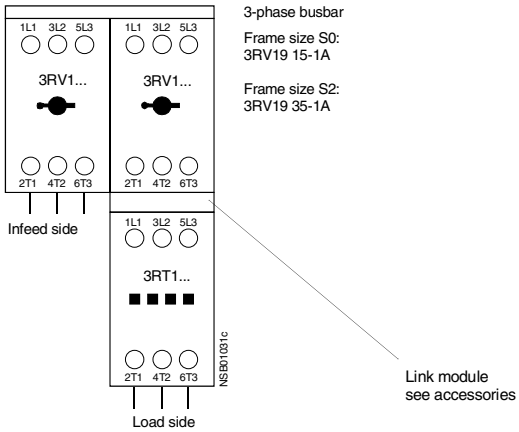

Format for frame size S0 from 7.5 to 11 kW

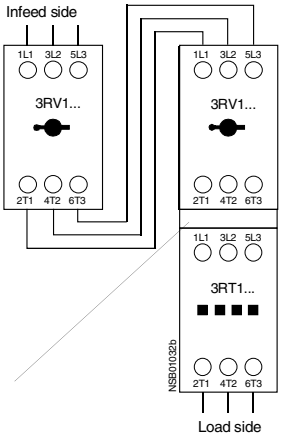

When installing the combination, the following clearances must be maintained to grounded parts:

2 circuit breakers/MSPs combined with contactors			Clearance to grounded or live parts					
Circuit breaker	Contactor	Rated operational voltage	Y1 mm	Y2 mm	Y3 mm	X1 mm	X2 mm	X3 mm
3RV1. 2 with	3RT10 1	690 V	80	10	95	20	14	20
3RV1. 3 with	3RT10 3	690 V	50	10	120	10	32	10
	3RT10 4	690 V	50	10	120	10	40	10

(1) 3-phase busbar

S0: 3RV19 15-1A
S2: 3RV19 35-1A

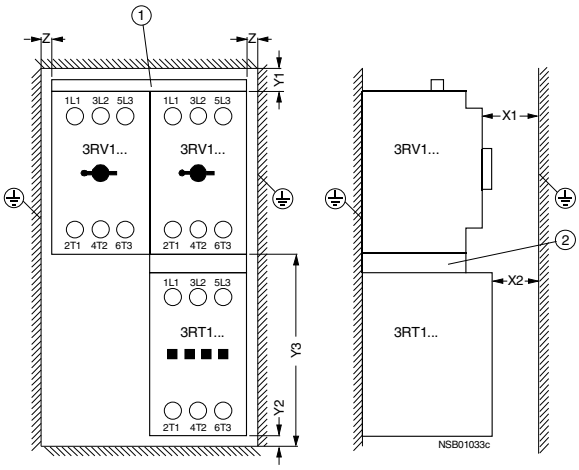

(2) In a combination involving a circuit breaker of frame size S2 and a contactor of frame size S3, a clearance of 10 cm must be maintained

General specifications

Specifications			IEC 60 947-1, EN 60 947-1 (VDE 0660 Part 100) IEC 60 947-2, EN 60 947-2 (VDE 0660 Part 101) IEC 60 947-4-1, EN 60 947-4-1 (VDE 0660 Part 102)			
Type Frame size Number of poles			**3RA1. 1** **S00** 3	**3RA1. 2** **S0** 3	**3RA1. 3** **S2** 3	**3RA11 4** **S3** 3
Max. rated current I_{nmax} (= max. rated operational current I_e)		A	12	25	50	100
Permissible ambient temperature		°C °C	–55 to +80 for storage/transportation –20 to +70 for operation (above +60 °C with restrictions)			
Rated operating voltage U_e **Rated frequency** **Rated insulation voltage U_i** **Rated impulse strength U_{imp}**		V Hz V kV	690 50/60 690 6			
Tripping class (CLASS)	In acc. with IEC 60 947-4-1, EN 60 947-4-1 (VDE 0660 Part 102)		10			
Rated short-circuit current I_q at 50/60 Hz 400 V AC **in acc. with IEC 60 947-4-1, EN 60 947-4-1 (VDE 0660 Part 102)** **Coordination types in acc. with IEC 60 947-4-1, EN 60 947-4-1** **(VDE 0660 Part 102)**		kA	50 [1])			
Power loss $P_{v\ max}$ of all main conducting paths depending on the rated current I_n (upper setting range)	• Up to 1.25 A	W	6			
	• 1.6 to 6.3 A	W	7			
	• 8 to 12 A	W	10.5			
	• 2 to 6.3 A	W		7		
	• 8 to 16 A	W		9.5		
	• 20 to 25 A	W		13		
	• 25 to 32 A	W				
	• 40 A	W			19	
	• 45 to 50 A	W			28	
	• 63 A	W			35	
	• 75 to 90 A	W				29
	• 100 A	W				45 60
Power input of the magnet coils with contactors (given a cold coil and U_s, 50 Hz)						
• AC operation	Making capacity	VA	27	61	127	270
	cos φ		0.8	0.82	0.82	0.68
	Holding power	VA	4.6	7.8	13.5	22
	cos φ		0.27	0.24	0.34	0.27
• DC operation	Making capacity = holding power	W	3.2	5.4	11.50	15
Operating range of the magnet coils with contactors			0.8 to 1.1 x U_s			
	Lower limit at 55 °C		0.8 x U_s	–		
	Lower limit at 60 °C		0.85 x U_s	–		
Service life of circuit breakers/MSPs						
• Mechanical life		Operating cycles	100,000		50,000	
• Electrical life		Operating cycles	100,000		50,000	
• Max. switching frequency per hour (motor startups)		1/h	15		15	
Service life of contactors						
• Mechanical life		Operating cycles	30 million	10 million		
• Electrical life		Operating cycles	See the service life characteristic of the contactors (part 3).			
Shock resistance (sinus)	In acc. with IEC 60 068 Part 2-27	*g*	Up to 9.8	Up to 12.5	Up to 8	Up to 6
Degree of protection	In acc. with IEC 60 947-1		IP20		IP20 IP00 terminal housing	
Shock protection	In acc. with DIN VDE 0106 Part 100		Protected against touching by fingers			
Phase loss sensitivity of the circuit breaker/MSP	In acc. with IEC 60 947-4-1, EN 60 947-4-1 (VDE 0660 Part 102)		Yes			
Disconnector properties of the circuit breaker/MSP	In acc. with IEC 60 947-2, EN 60 947-2 (VDE 0660 Part 101)		Yes			
Main and emergency-stop switch properties of the circuit breaker/MSP and accessories	In acc. with IEC 60 204-1, EN 60 204-1 (VDE 0113 Part 1)		Yes, with undervoltage release to category 1 in the case of proper use			
Safe isolation between the main and auxiliary circuits	In acc. with DIN VDE 0160 Part 101		Up to 400 V			
Positively driven operation with contactors			Yes	Yes, from the main contact to the auxiliary normally closed contact		

Conductor cross-sections - main circuit

Specifications		IEC 60 947-1, EN 60 947-1 (VDE 0660 Part 100) IEC 60 947-2, EN 60 947-2 (VDE 0660 Part 101) IEC 60 947-4-1, EN 60 947-4-1 (VDE 0660 Part 102)			
Type		**3RA1.1**	**3RA1. 2**	**3RA1. 3**	**3RA11 4**
Frame size		**S00**	**S0**	**S2**	**S3**
Number of poles		3	3	3	3
Connection type		Screw-type terminal	Screw-type terminal	Box terminal	Box terminal
Terminal screw		Pozidriv 2	Pozidriv 2	Pozidriv 2	Allen screw
Minimum/maximum conductor cross-sections					
• Finely stranded with wire end ferrule					
- 1-wire	mm^2	0.5/2.5	1/6	0.75/25	2.5/50[1])
- 2-wire	mm^2	0.5/2.5	1/2.5 to 2.5/6	0.75/16	2.5/35[1])
• Single- or multi-core					
- 1-wire	mm^2	0.5/4	1/6 (max. 10)	0.75/35	2.5/70[1])
- 2-wire	mm^2	0.75/2.5 (max. 4)	1/2.5 to 2.5/6	0.75/25	2.5/50[1])
Ribbon conductor		–	–	yes	yes
Bar connection		–	–	–	yes
• Single- or multi-core	AWG	2 x (18 to 14)	2 x (14 to 10)	2 x (30 to 2)	–
• Multi-core	AWG	–	–	–	2 x (10 to 1/0)
Connection type		Cage Clamp terminal			
	mm^2	2 x (0.5 to 2.5)	–		
	AWG	2 x (18 to 14)			
Permissible installation position		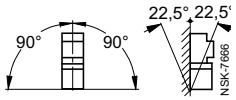 Important: In acc. with DIN 43 602 Start command "**I**" right or above			

1) After the box terminals have been removed, lug or busbar connections are possible.

6

3RH, 3TX, LZX Coupling links

Section	Subject	Page
6.1	**Specifications/regulations**	**6-2**
6.2	**Device description**	**6-3**
6.2.1	Relay coupling modules versus semiconductor coupling modules	6-4
6.2.2	Coupling links in two-tier and box terminal format	6-5
6.2.3	Plug-in relay coupling links	6-6
6.2.4	Coupling links for direct attachment	6-7
6.2.5	SIRIUS contactor relays	6-7
6.2.6	Installation	6-7
6.2.7	Notes on configuration	6-8
6.2.8	Explanation of terms	6-9
6.3	**Application and areas of use**	**6-10**
6.3.1	General information	6-10
6.3.2	Criteria for selection	6-11
6.4	**Accessories**	**6-12**
6.4.1	Accessories for two-tier coupling links	6-12
6.4.2	Accessories for LZX plug-in relay coupling links	6-13
6.5	**Mounting and connection**	**6-14**
6.5.1	Mounting	6-14
6.5.2	Connection	6-14
6.5.3	Device circuit diagrams	6-16
6.6	**Dimensional drawings (dimensions in mm)**	**6-20**
6.7	**Technical specifications**	**6-22**

6.1 Specifications/regulations

Degrees of protection offered by housing	EN 60 529
I/O interfaces	EN 61 131-2
Connection designations	EN 50 005
DIN standard rail	EN 50 022
Coordination of insulation	VDE 0110
Electrical relays, all-or-nothing relays	DIN VDE 0435 Part 201/IEC 60255-1-00
Control devices and switching elements	DIN VDE 0660 Part 200/IEC 60947-5-1
Optocoupler	DIN VDE 0884
Equipment of high-voltage installations	DIN VDE 0160
Shock protection	DIN VDE 0106 Part 100
Safe isolation	DIN VDE 0106 Part 101
Environmental conditions	IEC 60721
EMC Emission Immunity	 EN 50081 EN 50082
General information	VDE 0660 Part 100/IEC 60947-1
Specifications for industrial control systems	UL 508
Specifications for industrial equipment	CSA C22.2-14

Table 6-1: Regulations and specifications

6.2 Device description

Coupling links are interface modules that enable optimal adaptation between electronic controllers and I/O devices, both on the sensor and the actuator side.
They also provide electrical isolation.

Overview

The following table offers an overview of the device groups and their distinguishing features:

Device group	Distinguishing features
Two-tier coupling links 3TX7004/3TX7005	Relay couplers: 6.2 to 22.5 mm width, contact elements: 1 to 3 normally open contacts, 1 to 2 changeover contacts Multi-channel devices Semiconductor couplers: 6.2 to 12.5 mm width Long service life, high switching frequency Screw-type terminal (3TX7004) Cage Clamp terminal (3TX7005)
Box terminals 3TX7002/3TX7003	Relay couplers: Contact elements: 1 to 2 normally open contacts, 1 to 2 changeover contacts, low device height Semiconductor couplers: Long service life, high switching frequency Screw-type terminal (3TX7002) Cage Clamp terminal (3TX7003)
Plug-in relay coupling links LZX: RT/PT/MT	Plug-in relays (1 to 4 changeover contacts) High switching currents, prewiring possible
Coupling links for direct attachment to contactor coils 3RH1924/3TX4090/3TX7090	Space-saving, adapted to contactor type, reduced wiring 3RH1924 for frame sizes S0 to S3 3TX4090 for 3TH42/43 auxiliary contactors 3TX7090 for frame sizes 3 to 14
SIRIUS contactor relays 3RT10 3RH11	 For main circuits: switching from motors to 11 kW directly For main circuits: up to 4 auxiliary switches

Table 6-2: 3RH, 3TX, LZX coupling links - overview of the device groups with their distinguishing features

Contact material

Relay coupling links are offered with AgNi and hard gold-plated contacts. Hard gold-plated contacts have greater contact reliability at low voltages and currents. They can be used as of mV or µA. They can be used to switch low levels of power, such as those involved in measurement and control signals. In the case of input coupling links, they are to be recommended on account of the low currents of the input modules of controllers.

6.2.1 Relay coupling modules versus semiconductor coupling modules

Models	Advantages	Disadvantages
Relay coupling modules **6.2 mm**: • Single-channel • 1 NO/ 1 SPDT **12.5 mm**: • Single-channel • Multi-channel • With/ without M-O-A switch • 1 SPDT/ 1 NO/ 2 NO **17.5 mm**: • Single-channel • Multi-channel • Without switch • 3 NO **22.5 mm**: • Single-channel • Multi-channel • Without switch • 2 SPDT	• Suitable for direct and alternating voltage • High switching capacity without heat generation • Virtually no transfer resistance (suitable as measured value transfer switch) • Electrical isolation • Safe isolation between contact and coil sides • No leakage current • High electromagnetic compatibility • High noise immunity • Insensitive to overloads and voltage peaks • Several switching levels	• Lower switching frequency • Contact erosion, particularly in the case of inductive loads • Inductivity of the coil (disturbance) • Mechanical wear (service life) • Low direct-current switching capacity • Bounce time of the relay contact • Danger of contact microwelding in the case of capacitive loads
Semiconductor coupling modules **6.2 mm**: • Single-channel **12.5 mm**: • Single-channel • With M-O-A switch • Without switch	• No contact welding in the case of capacitive loads • High switching frequencies • High direct-current switching capacity • Long service life • Bounce-free switching • Insensitive to vibrations and impact • Defined transfer resistance and volume resistance • Safe isolation between drive circuit and load in acc. with DIN VDE 0884 • Silent switching operation	• High temperature rise in the case of high loads • Leakage current at output • Sensitive to peaks in the power system • Not suitable as measured value transfer switch because of a voltage drop at the switching transistor

Table 6-3: Comparison: Relay coupling modules and semiconductor coupling modules

6.2.2 Coupling links in two-tier and box terminal format

Features

- Connections at two levels
- Very narrow design, as of 6.2 mm
- Terminal system: screw-type and Cage Clamp
- Labeling strip to identify equipment

Models

The 3TX70 coupling links for SIRIUS are available as both input couplers and output couplers, which have their terminals in different positions:

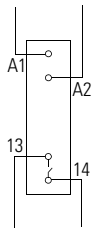

Fig. 6-1: Output coupler

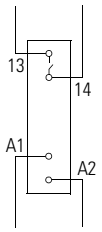

Fig. 6-2: Input coupler

Input coupling links have hard gold-plated contacts for greater contact reliability at low voltages and currents.

Status indication

A yellow status LED on the drive circuit side indicates whether there is any control supply voltage applied to the coupler.

Protective circuit

There is an integrated rectifier at the input of each coupler. As a result, they are protected against polarity reversal. The rectifiers function as flywheeling diodes at disconnection. Semiconductor outputs are protected by suppressor or Zener diodes.

Manual-0-automatic

Some coupling links are equipped with a manual-0-automatic switch that makes it easier to switch the system on and is used for test purposes.

- Manual: Relay is always on
- 0 (zero): Relay is always off
- Automatic: Relay follows the control supply voltage (A1)

Power consumption

Following on from the technical specifications of the electronic systems, the coupling links have low power consumption. They can be controlled from a programmable controller and are suitable for continuous duty.

Accessories

The following accessories are available for two-tier coupling links:

- 24-pole connecting lead or connection comb
- Screwdriver for Cage Clamp terminal system
- End holder and end plate

6.2.3 Plug-in relay coupling links

The plug-in relay coupling links are modular coupling links. The plug-in format means the relays can be easily replaced.

Models

There are complete modules for 1 and 2 changeover contacts and individual modules for 1, 2, 3 or 4 changeover contacts for a rated control supply voltage of either 24 V DC or 230 V AC.

Widths

Plug-in relay coupling links are available in 3 widths:
- 15.5 mm print relays, LZX: RT variants
- 27 mm mini-industrial relays, LZX: PT variants
- 38 mm industrial relays, LZX: MT variants

Installation

The plug-in relay coupling links are plugged into the associated bases, and these are snapped onto a 35 mm rail in acc. with EN 50 022.

Surge suppression

To avoid high breaking voltage peaks, LZX: RT and PT plug-in relay coupling links are available for a rated control supply voltage of 24 V DC, with 1, 2, or 4 changeover contacts (Ws) and integrated surge suppression (flywheeling diode). RC elements are available for AC voltages.

Connection

The standard polarity must be taken into consideration when connecting up:
- At A1: positive voltage supply (+)
- At A2: negative voltage supply (-)

Test button

The LZX: PT and MT variants are equipped with a test button. The plug-in relay coupling link can thus be brought into the switching state and locked without the need for electrical triggering. When the test button is protruding, this indicates the locked switching position.

LED

An LED is available either as an individual plug-in module or is integrated in the relay, depending on the variant involved.

Power consumption

Following on from the technical specifications of the electronic systems, the coupling links have low power consumption.

Safe isolation

The drive circuit and contacts are electrically isolated. Safe isolation can also be achieved for the print relays (LZX:RT and PT series) by means of a special base.

6.2.4 Coupling links for direct attachment

Contactors S0 to S3

The 3RH1924-1GP11 coupling relay, which is screwed directly onto the coil terminals, is available for direct attachment to the contactors of frame sizes S0 to S3.
The 3TX4090-0C/-0D coupling links are suitable for attachment to 3TH42/43 auxiliary contactors.

Contactors of up to 450 kW

In the case of the large contactors of up to 450 kW (size 14), the 3TX7090 coupling link can be snapped on at the side like an auxiliary switch block, and the wires are connected to the contactor coil terminals.

Variants

There are variants with one normally open contact, 24 V DC, with and without surge suppression.
The operating range is 17 to 30 V DC.

Installation

The 3TX 4090 and 3RH1924-1GP11 coupling links are screwed directly onto the contactor coil terminals, and the 3TX7090 coupling links are snapped on at the side like the auxiliary switches.

Surge suppression

The following coupling links have an integrated surge suppressor (varistor) for the contactor coil to be switched:
- 3RH1924-1GP11
- 3TX4090-0D
- 3TX7090-0D

Power consumption

Following on from the technical specifications of the electronic systems, the coupling links have low power consumption.

LED

An LED is integrated in the coupler.

6.2.5 SIRIUS contactor relays

The SIRIUS 3RT10/3RH11 contactor relays are described in Chapter 3, "Contactors".

6.2.6 Installation

Attachment

Snap-on attachment
The coupling links can be snapped onto a 35 mm rail in acc. with EN 50 022.
Screw-on attachment is not possible.

Connection

Screw-type terminals
The two-tier coupling links are fitted with slotted screws for a maximum screwdriver blade width of 4 mm.
Plug-in relay couplers have plus-minus POZIDRIV 2 screw-type terminals.

Cage Clamp terminals
The two-tier coupling links described in Section 6.2.1 are available with Cage Clamp terminals as well as screw-type terminals.

6.2.7 Notes on configuration

Contact microwelding

When capacitive loads are switched, a short-circuit current briefly occurs (for a period lasting only microseconds) if the capacitor is not connected in series with a resistor. This can result in contact microwelding and the contact being unable to open after the control supply voltage is removed. To prevent this from happening, a resistor can be connected in series, or a coupling link with a semiconductor output and short-circuit protection can be used.

Switching inductive loads

The contacts are tested in acc. with EN 60947-5-1, utilization category AC-15 and DC-13. Going beyond the requirements of the standard, a continuous test was carried out on the contacts with an AC-15 load for 100,000 operating cycles. The electrical service life of the contacts was thus tested over 100,000 operating cycles at the specified current under normal conditions. A lower load on the contacts or a protective circuit for the inductive load increases the service life of the contacts. If this service life is insufficient, a semiconductor coupler with an unlimited service life must be used.

Max. line length in AC operation

Each wire has a line capacitance that works like a capacitor connected in series to the coupling link. The effect of this in operation with alternating current is that so much current may flow due to the line capacitance that the coupling link does not fall in spite of a switch being open. To remedy this, a parallel resistor can be fitted to A1/A2 of the coupling link, or an RC combination can be used. Both of these measures change the performance and switching times of the coupling link.
The following basic circuit diagram shows the line capacitance:

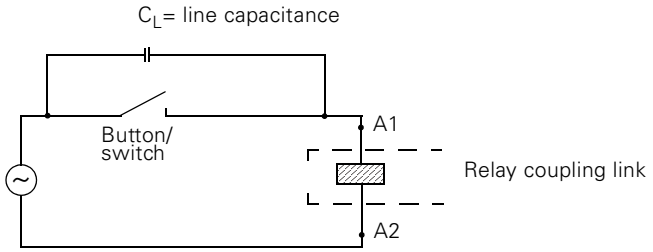

Fig. 6-3: Basic circuit diagram, line capacitance

The line lengths specified in the catalog were calculated for a line capacitance of 0.3 nF/m. This depends on the wire used.

6.2.8 Explanation of terms

Electrical isolation

There is no conductive connection between the input circuit and the output circuit. Electrical isolation is ensured by the in-built relay and, in the case of semiconductor outputs, by means of optocouplers.

Safe isolation

Safe isolation provides protection against shock currents in different circuits. It is implemented by means of increased creepages and clearances.

Distinction between terms

Electrical isolation is not necessarily safe isolation.
Safe isolation is a protective measure against shock current, the primary purpose of which is to prevent injury. It prevents the voltage of one circuit crossing over into another.

For the insulation coordination of equipment, the standard specifies values for the rating of the creepages and clearances.

In the case of safe isolation, these values must be selected by means of double or reinforced insulation.

6.3 Application and areas of use

6.3.1 General information

Advantages

The use of coupling links offers the following advantages:
- Galvanic isolation between two circuits
- Current gain
- Protects the controller from interference and overvoltage
- Substantially reduces the power input of switchgear
- Permits power gain or level adaptation

Applications

Coupling links are used in:
- Production engineering
- Machine setup
- Process control in power distribution
- Building services automation
- Process engineering

Usage

Coupling links are used for:
- Floating signal transmission
- Linking of different voltages (AC/DC) and currents
- Power gain
- Level adaptation
- Protection of the controller against EMC noise from the I/O
- Contact multiplication

Application example

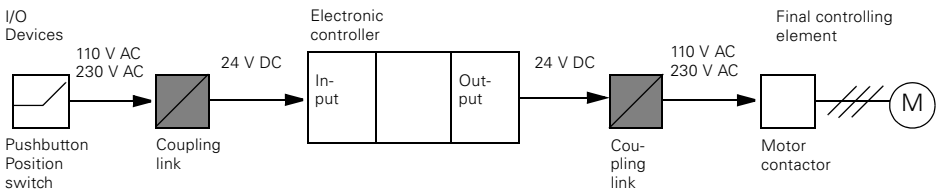

Fig. 6-4: Application example, coupling links in box terminal format

6.3.2 Criteria for selection

Coupling links are selected on the basis of a number of criteria:

Technical specifications

See Section 6.7:
- Rated control supply voltage U_s
- Typical power input
- Output elements
- Rated operational currents I_e
- Permissible line length

Mechanical requirements

- Construction type, width
- Mounting type
- Indicators
- Connection type
- Replaceability

Selection table

The following table provides an overview of the main criteria for selection from different device groups:

Device group	Criteria for selection
Two-tier coupling links	• Space-saving due to narrow housing width • Test switches
Coupling links in box terminal format	• Low device height • For installation given narrow tier spacing
Contactor relays for switching main and auxiliary circuits	• High switching currents • Direct switching of motors up to 11 kW • Up to 4 auxiliary contacts
Plug-in relay coupling links	• High switching currents • Quickly interchangeable • Up to 4 changeover contacts
Coupling links for attachment to contactors	• Attachable directly onto the contactor • Technical specifications of the contactor to be controlled

Table 6-4: Selection criteria for the 3RH, 3TX, and LZX coupling links

6.4 Accessories

6.4.1 Accessories for two-tier coupling links

Connecting lead

The 24-pole connecting lead 3TX7004-8BA00 can be used for all two-tier coupling links both with screw-type and Cage Clamp terminals:

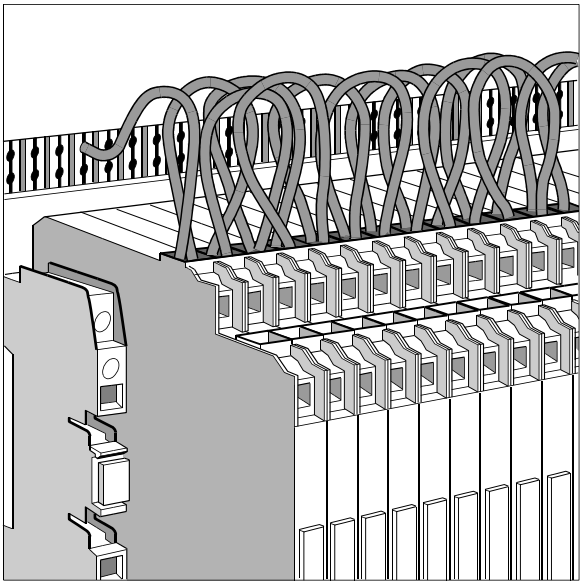

Fig. 6-5: 24-pole connection lead for two-tier coupling links

Connection comb

The 24-pole connection comb 3TX7004-8AA00 can be used for the 6.2 mm wide two-tier coupling links with screw-type terminals:

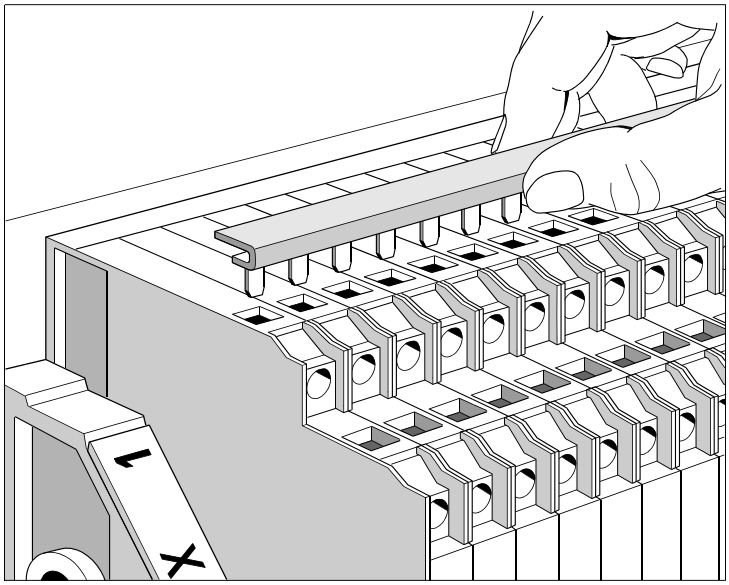

Fig. 6-6: 24-pole connection comb for two-tier coupling links

End holder

The end holder 8WA2808 is snapped onto the rail (EN 50 022) without screws.

Screwdriver for Cage Clamp terminal system

The screwdriver 8WA2804 is suitable when wiring coupling links with Cage Clamp terminals.

End plate

In order to ensure shock protection in the case of the two-tier optocouplers having a width of 6.2 mm and with a housing opening (e.g. 3TX7 004-3AB04), the individual module or last module in a series must be fitted with an end plate 3TX7004-8CE00.

Labeling strip

Each coupling link has a labeling strip for the purpose of identification.

6.4.2 Accessories for LZX plug-in relay coupling links

Retainer

In situations where there is increased mechanical stress, a retainer can be fitted to plug-in relay coupling links to provide stability.

LED module

An LED can be fitted as an individual plug-in module with the variants LZX:RT and LZX:PT.

Module with flywheeling diode

A flywheeling diode for surge suppression can be fitted as a module (for DC voltages) with the variants LZX:RT and LZX:PT.

RC module

For AC voltages, there is a plug-in RC module available with the series LZX:RT and LZX:PT for surge suppression.

6.5 Mounting and connection

6.5.1 Mounting

Snap-on attachment

The coupling links are snapped onto 35 mm rails in acc. with EN 50 022. With a vertical rail and tightly packed devices, the permissible ambient temperature T_U is 60° C.
Any installation position is possible.

6.5.2 Connection

The coupling links are available with the SIGUT® terminal system, with screw-type terminals, or with Cage Clamp terminals.

Cage Clamp terminals

Important
Risk of injury
When making connections using the Cage Clamp terminal system, you should support your screwdriver with your finger to prevent the screwdriver slipping.

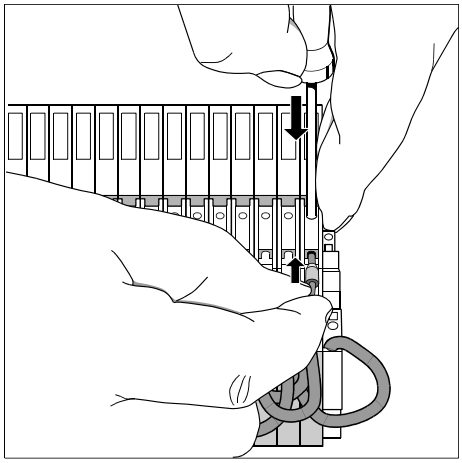

Fig. 6-7: Cage Clamp terminals, coupling links

Conductor cross-sections

The following table shows the permissible conductor cross-sections for the coupling links. The specifications apply to main and auxiliary connections.

	3TX7004 3TX7002 Screw-type terminals	3TX7005 3TX7003 Cage Clamp terminals	LZX: RT/ZT/MT	3RH1924 3TX7090 Screw-type terminals
∅ 3.5 mm	M3	—	—	M3
10	1 x (0.25 to 4) mm²	1 x (0.08 to 2.5) mm²	2 x 2.5 mm²	2 x (0.5 to 2.5) mm²
10	1 x (0.5 to 2.5) mm²	1 x (0.25 to 2.5) mm²	2 x 1.5 mm²	2 x (0.5 to 1.5) mm²

Table 6-5: Conductor cross-sections for the 3RH, 3TX, and LZX coupling links

6.5.3 Device circuit diagrams

The following circuit diagrams are examples:

3RH1924

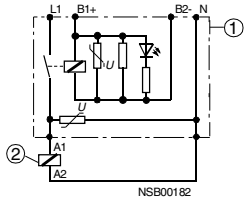

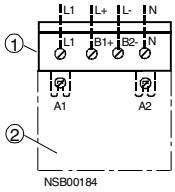

3RH1924-1GP11 with surge suppressor
① Coupling link
② Contactor

Relay coupling modules
3TX7 002/3TX7 003

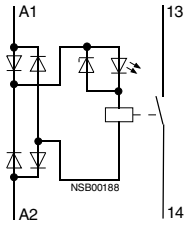

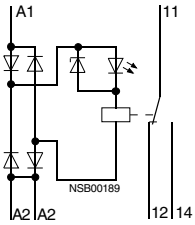

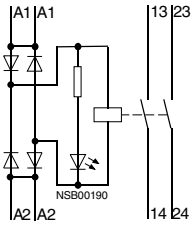

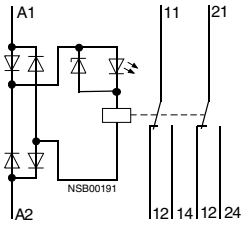

3TX7002-.A.00
-1AB00
-2AF00
3TX7003-1AB00

-1B.00

-1CB00

-1FB00

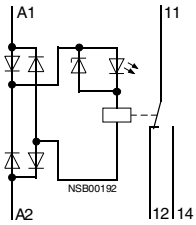

-2BF02

Semiconductor coupling modules
3TX7 002

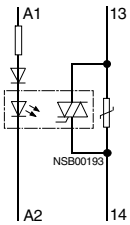

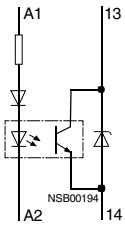

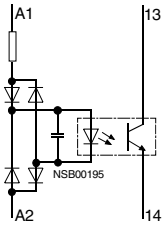

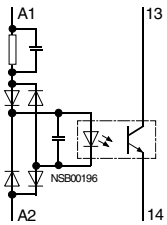

3TX7 002-0AB00

-3AB01

-4AB00

4AG0.

Relay coupling modules
3TX7 004/3TX7 005
Output coupling links

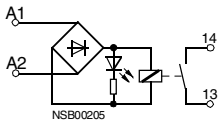

3TX7 00.-1M.00

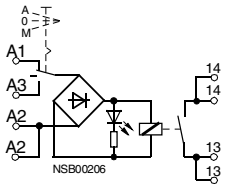

3TX7 00.-1AB10

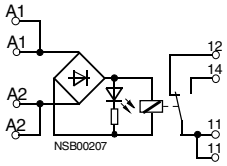

3TX7 00.-1BB00

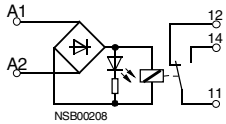

3TX7 00.-1L.0.

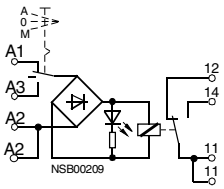

3TX7 00.-1BB10

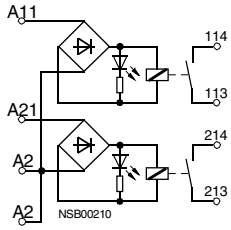

3TX7 00.-1CB00

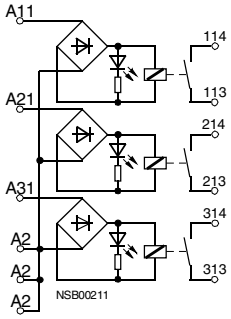

3TX7 00.-1HB00

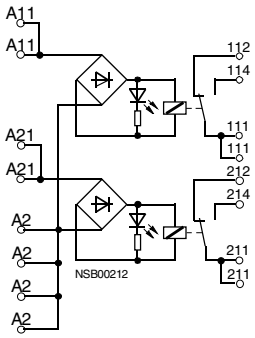

3TX7 00.-1GB00

Relay coupling modules
3TX7 004/3TX7 005
Input coupling links

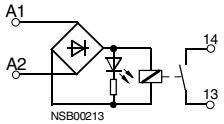

3TX7 00.-2M.02

Semiconductor coupling modules 3TX7 004/3TX7 005 Output coupling links

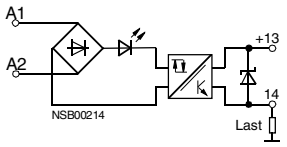

3TX7 00.-3AB04

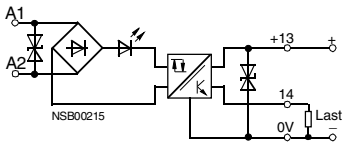

3TX7 00.-3PB54

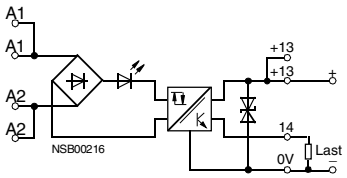

3TX7 00.-3AC04

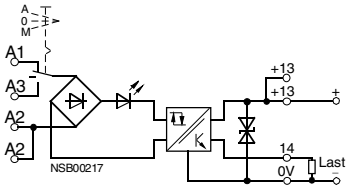

3TX7 00.-3AC14

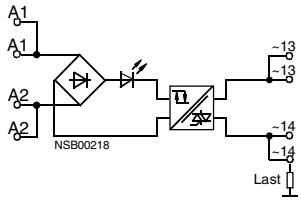

3TX7 00.-3AC03

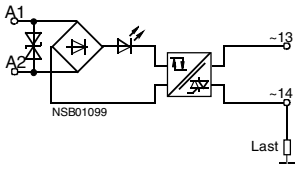

Semiconductor coupling modules 3TX7 004/7 005 Input coupling links

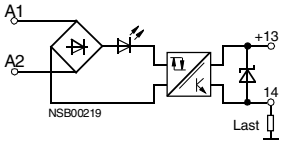

3TX7 00.-4AB04

Relay couplers LZX: RT/PT/MT

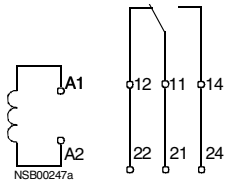

LZX: RT3, 1-pole

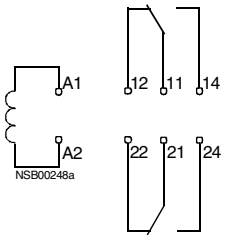

LZX: RT4, 2-pole

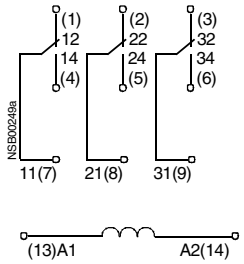

LZX: PT370, 3-pole

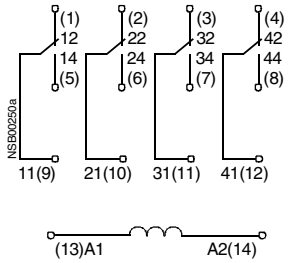

LZX: PT570, 4-pole

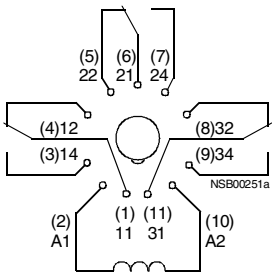

LZX: MT32, 3-pole

Values in brackets:	Plug-in base designations
Values without brackets:	Contact/coil designations

6.6 Dimensional drawings (dimensions in mm)

Two-tier coupling links 3TX7 004/3TX7 005

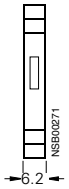

Relay couplers
3TX7 00.-1MB00
3TX7 00.-1MF00
3TX7 00.-1L . 0 .
3TX7 00.-2M...

Optocouplers
3TX7 00.-3AB04
3TX7 00.-4AB04
3TX7 00.-3PB..
3TX7 00.-3PG74
3TX7 00.-3RB43
3TX7 00.-4P . 24

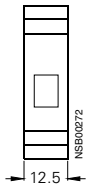

Relay couplers
3TX7 00.-1AB10
3TX7 00.-1BB00
3TX7 00.-1BB10
3TX7 00.-1CB00
3TX7 00.-1BF05
Optocouplers
3TX7 00.-3AC04
3TX7 00.-3AC14
3TX7 00.-3AC03

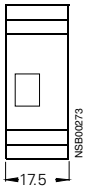

Relay couplers
3TX7 00.-1HB00

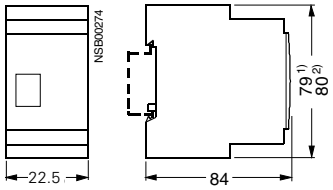

Relay couplers
3TX7 00.-1GB00

1) Dimension 3TX7 004 coupling links (screw-type terminals)
2) Dimension 3TX7 005 coupling links (Cage Clamp terminals)

Coupling links in box terminal format 3TX7 002/3TX7 003

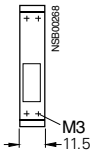

3TX7 00.-1AB..
3TX7 00.-2A...
3TX7 002-3AB01

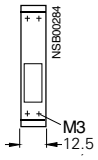

3TX7 002-3AB00
3TX7 002-4A...

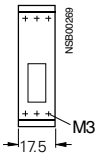

3TX7 00.-1BB00
3TX7 00.-1BF00
3TX7 002-2BF02

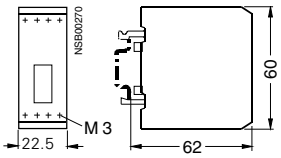

3TX7 00.-1CB00
3TX7 002-1BF02

Plug-in relay coupling links LZX: RT

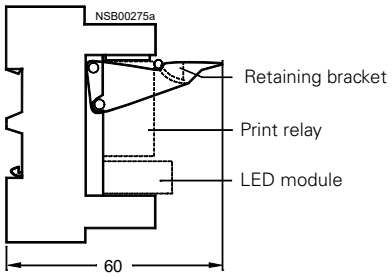

Complete device LZX: RT3/RT4

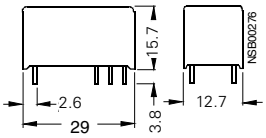

Print relay LZX: RT3/RT4

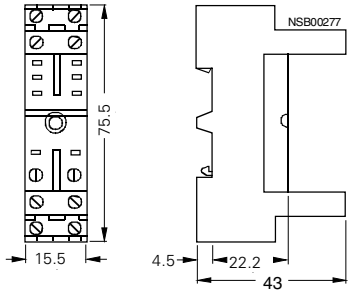

Plug-in base LZX: RT78625 for print relays

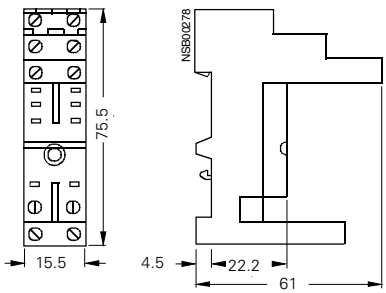

Plug-in base LZX: RT78626 with safe isolation for print relays

Plug-in relay coupling links LZX: PT

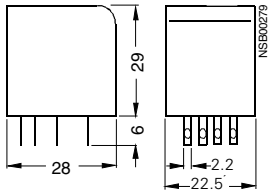

Industrial relay LZX: PT570

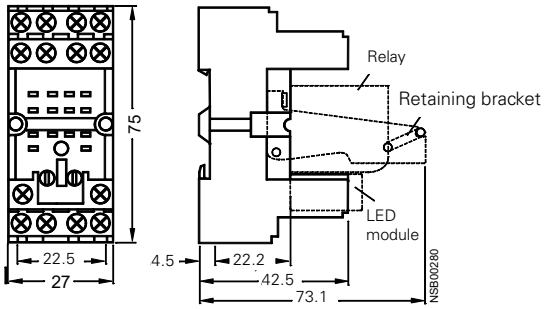

Plug-in base LZX: PT78703 for industrial relays

Plug-in relay coupling links LZX: MT/MR

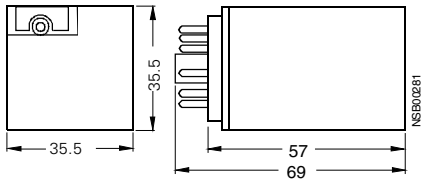

Industrial relay LZX: MT32

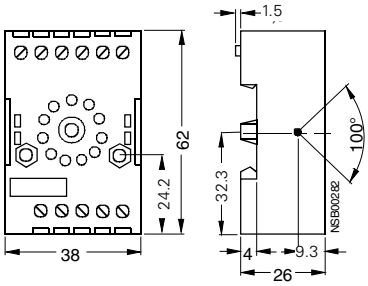

Plug-in base LZX: MR78750 for industrial relays

Coupling links 3RH/3TX

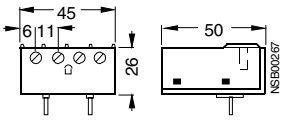

3RH1924-1GP11

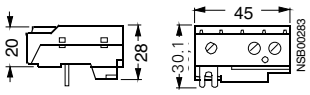

3TX4090-0C

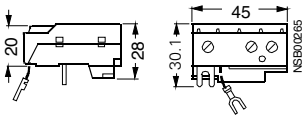

3TX4090-0D

6.7 Technical specifications

3TX70 relay coupling links

Load side						
Rated currents			**3TX7 00 .-1A/-1B/-1C/-1H/-1G**		**3TX7 00 .-. L/- .M**	
Conventional free air thermal current I_{th}		A	6		6	
Rated operational current I_e by utilization categories (DIN VDE 0660)			AC-15	DC-13	AC-15	DC-13
	At 24 V	A	3	1.0	2	1.0
	110 V	A	3	0.2	2	0.2
	230 V	A	3	0.1	2	0.1
Current switched			AC-12	DC-12	AC-12	DC-12
For resistive load In acc. with DIN VDE 0435 (relay standard) and DIN VDE 0660	At 24V	A	6	6	6	6
	110 V	A	6	0.3	6	0.3
		A	6	0.2	6	0.2
Min. contact loading for 3TX7 00 . -1 . . 00			17 V AC/V DC, 5 mA		17 V AC/V DC, 5 mA	
Min. contact loading for 3TX7 00 . -. . . 02 (hard gold-plating)			1 V AC/V DC, 0.1 mA		1 V AC/V DC, 0.1 mA	
Performance limit/hard gold-plating			30 V/20 mA		30 V/20 mA	
Switching voltage			17 to 250 V AC/V DC		17 to 250 V AC/V DC	
Mechanical life			20 x 10^6 operating cycles		20 x 10^6 operating cycles	
Electrical service life at I_e			1 x 10^5 operating cycles		0.5 x 10^5 operating cycles	
Switching frequency		1/h	5000 operating cycles		5000 operating cycles	

Table 6-6: Technical specifications, 3TX70 relay coupling links

3TX7004/3TX7005 semiconductor coupling links

Load side							
Type	**3TX7 004-/ 3TX7 005-**		**3AB04/ 4AB04**	**3AC.4**	**3AC03**	**4AB04**	**3PB54**
Rated operating current I_e		A	0.5	5	2	0.5	1.5
Short-term current carrying capacity		A ms	1.5 20	Short circuit-proof	100 20	1.5 20	Short circuit-proof
Contact elements			1 NO contact Transistor	1 NO contact Transistor	1 NO contact Triac	1 NO contact Transistor	1 NO contact Transistor
Switching voltage (operating range)			DC ≤ 48 V	DC ≤ 30 V	AC 50/60 Hz 24 to 250 V	DC ≤ 48 V	DC ≤ 30 V
Minimum load current		mA	—	—	50	—	—
Voltage drop switched through		V	1	0.5	1.6	1	0.5
Leakage current of the electronics (at 0 signal)		mA	< 0.1	< 0.1	< 6	< 0.1	< 0.1
Switching frequency For resistive load		Hz	50	50	1	50	500

Table 6-7: Technical specifications, 3TX7 004/3TX7 005 semiconductor coupling links

3TX7002/3TX7003 semiconductor coupling links

Load side						
Type	**3TX7 002-**		**3AB00**	**3AB01**	**4AB00**	**4AG00**
Rated operating current I_e		A	1.8	1.5 (See derating diagram)	0.1	0.1
Short-term current carrying capacity		A ms	20 20	4 0.2	1 20	1 20
Contact elements			1 NO contact Triac	1 NO contact Transistor	1 NO contact Transistor	1 NO contact Transistor
Switching voltage (operating range)			Effective 50/60 Hz 48 to 264 V AC	≤ 60 V DC	≤ 30 V DC	≤ 60 V DC
Minimum load current		mA	60	—	—	—
Voltage drop switched through		V	≤ 1.5	≤ 1.1	≤ 1.7	≤ 0.3
Leakage current of the electronic components (at 0 signal)		mA	<5	<0.1	<0.1	0.001
Switching frequency at I_e			1 Hz	1 Hz	5 Hz	5 Hz

Table 6-8: Technical specifications, 3TX7 002/3TX7 003 semiconductor coupling links

LZX: RT/PT

Relay type		**Print relay RT, 8-pole (12.7 mm) 1 W/2 W**		**Industrial relay PT, 14-pole (22.5 mm) 3 W/4 W**
Load side				
Switching voltage		24 to 250 VAC/VDC		24 to 250 VAC/VDC
Rated currents Conventional free air thermal current I_{th}		16 A/8 A (1 W/2 W)		10 A/6 A (3 W/4 W)
Rated operating current I_e		AC-15	DC-13	—
by utilization categories (DIN VDE 0660)	at 24 V	6 A/3 A	2 A	—
	230 V	6 A/3 A	0.27 A	—
Short-circuit protection Fuse links, performance class gL/gG DIAZED		10 A		—
Min. contact loading (reliability: 1 ppm)		12 VDC/10 mA		—
Mechanical life		30×10^6 operating cycles	10×10^6	10×10^6
Electrical life (resistive load at 250 VAC)		1×10^5 operating cycles	1×10^5	1×10^5

Table 6-9: Technical specifications, LZX: RT/PT

LZX: MT

Relay type		**Industrial relay MT, 11-pole (35.5 mm) 3 W**	
Load side			
Switching voltage		24 to 250 VAC/VDC	
Rated currents Conventional free air thermal current I_{th}		10 A	
Rated operating current I_e		AC-15	AC-13
by utilization categories (DIN VDE 0660)	at 24 V	5 A	2 A
	230 V	5 A	0.27 A
Short-circuit protection **Fuse links, performance class gL/gG DIAZED**		10 A	
Min. contact loading (reliability: 1 ppm)		12 VDC/10 mA	
Mechanical life		20×10^6 operating cycles	
Electrical service life (resistive load at 250 VAC)		4×10^5 operating cycles	

Table 6-10: Technical specifications, LZX: MT

3RH1924/3TX7090

Short-circuit protection				
(unwelded fuse at I_k W 1 kA)				
Fuse links, performance class gL/gG		A	6	
NH	Type 3NA			
DIAZED	Type 5SB			
NEOZED	Type 5SE			
Load side				
Mechanical life		Operating cycles	20×10^6	
Electrical service life at I_e		Operating cycles	1×10^5	
Switching voltage		V	24 to 250 V AC/V DC	
Rated currents				
Conventional free air thermal current I_{th}		A	6	
			AC-15	DC-13
Rated operating current I_e	At 24 V	A	3	1.0
by utilization categories	110 V	A	3	0.2
(DIN VDE 0660)	230 V	A	3	0.1

Table 6-11: Technical specifications, 3RH1924/3TX7090

7

3RP20, 3RP15 Solid-state time relays

Section	Subject	Page
7.1	**Specifications/regulations/approvals**	**7-2**
7.2	**Device description**	**7-3**
7.2.1	Device types	7-3
7.2.2	Installation	7-5
7.2.3	Special features	7-5
7.2.4	Notes on configuration	7-6
7.2.5	Explanation of terms	7-7
7.3	**Application and areas of use**	**7-8**
7.3.1	Multifunction (3RP20 05 solid-state time relay)	7-8
7.3.2	Multifunctional (3RP15 05 solid-state time relay)	7-12
7.3.3	On-delay	7-18
7.3.4	Off-delay	7-19
7.3.5	Clock pulse generator (3RP15 55 solid-state time relay)	7-20
7.3.6	Wye-delta function (3RP15 74/76 solid-state time relay)	7-21
7.3.7	Wye-delta function with overtravel (3RP15 60 solid-state time relay)	7-21
7.4	**Accessories**	**7-22**
7.4.1	Accessories for 3RP15 05, 3RP20 05	7-22
7.5	**Mounting and connection**	**7-24**
7.5.1	Mounting	7-24
7.5.2	Connection	7-25
7.5.3	Circuit diagrams	7-26
7.6	**Dimensional drawings (dimensions in mm)**	**7-27**
7.7	**Technical Data**	**7-28**

7.1 Specifications/regulations/approvals

Standards

The time relays comply with the following standards:
- IEC 61812-1/DIN VDE 0435 Part 2021 on electrical relays and time relays
- IEC 61000 on electromagnetic compatibility
- IEC 60947-5-1; DIN VDE 0660 Part 200 on low-voltage switchgear
- IEC 60721-3-1/-3 on environmental conditions
- IEC 60529 on degree of protection

Electromagnetic compatibility

The time relays are tested in acc. with EN 50 081-1 (emission) and EN 50 082-2 (immunity) and are thus noise-free and surge-proof.

Switching capacity

The switching capacity complies with IEC 60947-5-1
- In the case of utilization category AC-15 and 230 V AC: 3 A
- In the case of utilization category DC-13 and 24 V DC: 1 A
- In the case of utilization category DC-13 and 48 V DC: 0.45 A
- In the case of utilization category DC-13 and 60 V DC: 0.35 A
- In the case of utilization category DC-13 and 110 V DC: 0.2 A
- In the case of utilization category DC-13 and 230 V DC: 0.1 A

UL/CSA/marine approval

The SIMIREL time relays are approved by UL and CSA for use worldwide and tested by the GL, LRS, DM marine authorities.

Approvals/ test reports

Confirmation of approvals, test certificates, and the declaration of conformity can be obtained on the Internet/intranet.

7.2 Device description

Time relays are used for different control tasks in automatic production lines and for processing machines.
They are suitable for all time-delayed switching operations in control, starting, protective, and regulating circuits and ensure high repeatability of the set run times.

7.2.1 Device types

Device types

The SIMIREL 3RP1 time relays are available in the following forms:
- Single-function devices, such as the on-delay function
- Multifunctional devices

Frame sizes

The SIMIREL 3RP1 time relays are available in two widths:
- 3RP10: 45 mm
  The width, height, and depth of time relays and contactors of frame size S00 (3RT/3RH10) are identical. The terminals are therefore on the same level, and the tier spacing in the cubicle can be kept correspondingly low.
- 3RP15: 22.5 mm
  Time relays with 1 changeover contact are 82 mm in height and have six possible terminals
  Time relays with 2 changeover contacts are 102 mm in height and have a possible twelve terminals

View of the 3RP10

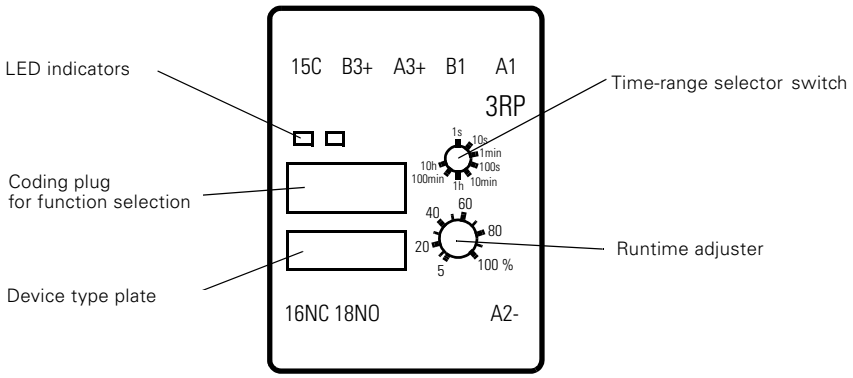

Fig. 7-1: 3RP1000 solid-state time relay, multifunctional

3RP10 features

The features of the 3RP10 solid-state time relay:
- 1 changeover contact
- Eight selectable time ranges
- Adjustable runtime from 0.05 s to 10 h
- Contact position and voltage indication by means of LED
- Safe isolation between the control and load sides in acc. with DIN VDE 0106 Part 101
- Combination voltage 24 V AC/V DC / 200-240 V AC and 24 V AC/V DC / 100-127 V AC
- Single-function device for the on-delay function
- Multifunctional device with 7 functions

View of the 3RP15

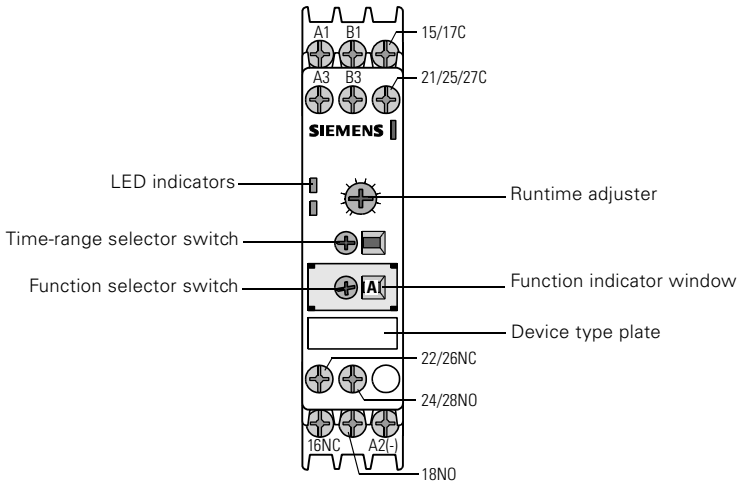

Fig. 7-2: 3RP15 solid-state time relay, multifunctional with 2 changeover contacts

3RP15 features

The features of the 3RP15 solid-state time relays are:

- 1 changeover contact (8 functions)
- 2 changeover contacts (16 functions)
- Single or up to 15 selectable time ranges
- Contact position and voltage indication by means of LEDs
- Combination voltage 24 V AC/V DC / 200-240 V AC, and 24 V AC/V DC / 100-127 V AC
- Wide-range voltage variant for 24-240 V AC/V DC
- Single-function devices for the following functions:
  - On-delay with 1 or 2 changeover contacts
  - Off-delay with auxiliary supply and 1 changeover contact
  - Off-delay without auxiliary supply and 1 or 2 changeover contacts
  - Clock pulse generator with 1 changeover contact
  - Star-delta with 2 NO contacts
  - 2-wire, on-delay with semiconductor output
- Multifunctional time relay with 8 (1 changeover contact) or 16 functions (2 changeover contacts)

Accessories

3RP10

Coding plug set for the multifunctional time relay with 7 functions

3RP15

- Label sets for the multifunctional time relay with 8 or 16 functions
- Sealable cap
- Push-in lugs for screw-type terminal

7.2.2 Installation

Attachment

Snap-on attachment
All the time relays can be snapped onto 35 mm rails and removed without tools in acc. with EN 50 022.
Screw-on attachment
3RP10: attachment openings are integrated in the device
3RP15: push-in lugs for screw-type attachment are available as accessories

Connection

The terminals of the 3RP1 time relays are designed for connections of the control cables with a maximum stripped length of 10 mm. Cross-sections of 2 x 0.5 to 2.5 mm^2 (single-coil) and 2 x 0.5 to 1.5 mm^2 (single-coil) can be clamped with a wire end ferrule.
Screw-type terminal (SIGUT® terminal)
The 3RP10 and 3RP15 time relays are available with plus-minus Pozidriv 2 screw-type connections.
Springloaded terminal
The 3RP10 and 3RP15 time relays are available with springloaded terminals.

7.2.3 Special features

Operating temperature

There are no restrictions on the control supply voltage, switching current, or duty cycle for operation between -25 °C to +60 °C.

Time ranges

There are up to 15 time settings, ranging from 0.05 s to 100 h. The 3RP15 has additional time settings between the decade scales (1/10/100 s/min/h) that make high setting accuracy possible.

Wide-range voltage

There are multifunctional relays with a wide voltage range of 24 V AC/V DC to 240 V AC/V DC.

Electrical service life

The electrical service life with contactor load (e.g. 3RT1016 contactor) is 10 million operating cycles.
The electrical service life at AC voltage of 230 V, utilization category AC-15/3 A, and at DC voltage, utilization category DC-13/1 A, is 100,000 operating cycles.

Start contact

In the case of functions that require a continuous auxiliary supply to terminals A1/A2 and A3/A2, the time function can be started by a control supply voltage to terminal B1 or B3.

7.2.4 Notes on configuration

The following specifications must be complied with to ensure error-free operation of the solid-state time relays:

Start input

Only apply the control supply voltage from start input B1 or B3 once the supply voltage has already been applied to A1/A2 or A3/A2.

Identical potential

Identical potential must be applied to terminals A1 and B1 or A3 and B3.

Combination voltage

In the case of combination voltage types, only one voltage range can be connected. Never apply the two control supply voltages simultaneously.

Parallel load at the start contact

The start contact is under voltage and rectified. There is a connection in the time relay to the A1 and A2 terminals. The control of loads parallel to the start input is therefore not permissible at AC 50/60 Hz control supply voltage.

The following information facilitates configuration of SIMIREL 3RP time relays:

Combination/ wide-range voltages

80 % of the time relay types are combination and wide-range voltage types because they are flexible in their uses:
– Combination voltage: two operating voltage ranges (e.g. 24 V AC/V DC and 200 to 240 V AC) at different terminals
– Wide-range voltage: one operating voltage range from 24 V AC/V DC to 240 V AC/V DC at the same terminals

Two-wire time relay

Two-wire time relays have the following advantages over conventional time relays in connection with contactors:
– Reduced wiring
– Bounce-free control
– The electronic output increases service life because no mechanical wear occurs
– Greater switching frequency

Special functions

- Pulsing function: pulse and idle time can be set separately.
- Flashing: the pulse/break ratio is 1:1.
- The timing period starts with the "off-delay without auxiliary supply" function if the time relay is separated from the supply voltage.
- In the case of the 3RP15 time relay with 15 selectable time settings, there is a ∞ switch position. This means an endless timing period. If this setting is chosen for the on-delay function, the output relay never switches through after the supply voltage has been applied (off function). In the case of the "making pulse contact" function, the output relay always remains on (on function). This can be used for test purposes.
- In the case of the "additive on-delay with auxiliary supply" function, the time is added for as long as the start contact is activated. If the start contact is interrupted, the timing period stops and is then continued once the start contact is closed again.
  This function is not non-volatile and requires a continuous auxiliary power supply.
- In the case of the "shaping pulse contact with auxiliary supply" function, an activated start contact triggers a timing period that can be set. The control signal for this can be shorter or longer than the desired runtime.

Cable ducts

If you use cable ducts for wiring, the position and dimensions of the terminal blocks must be taken into consideration (see pages 7-27).

7.2.5 Explanation of terms

Setting accuracy

Setting accuracy is the accuracy in relation to the end value of the scale in line with the specified tolerance.

Repeatability

Repeatability describes the accuracy with which the set value can be reproduced with the specified tolerance.

7.3 Application and areas of use

7.3.1 Multifunction (3RP20 05 solid-state time relay)

The time relay contains one or two SPDT contacts.

Operating time adjustment

15 time ranges can be set by means of a rotary switch.
The desired runtime can be set accurately by means of a potentiometer (rotary switch for fine adjustment).

Important
Changes to the time range are only effective if they are made in a deenergized state.

Example

You want to set a duration of 5 seconds:

Step	Procedure	
1	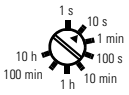	Rotate the time range selector switch to 10 s. This means runtimes of up to 10 seconds can be set.
2	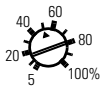	Rotate the potentiometer to 50 % for fine adjustment. In other words, 50 % (= 5 seconds) of the maximum value (10 seconds) is set.

Table 7-1: 3RP20 05 (multifunctional) operating time adjustment)

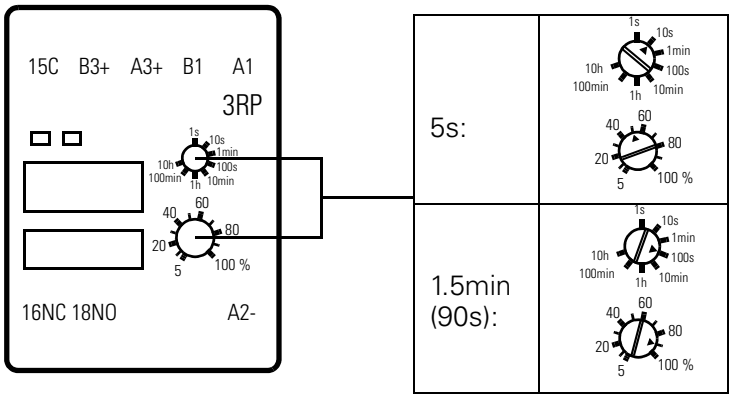

Fig. 7-3: 3RP20 05 (multifunctional) operating time adjustment

Functions

You can select 8 different functions with the integrated function setting dial.

Important
Changes to the function are only effective if they are made in a deenergized state.

Function diagrams

The label set, for labeling the set function on the solid state time relay 3RP2005- .A, contains the functions shown in the following table:

Function	Circuit diagram	Function diagram
1 SPDT		time relay energized contact closed contact open
On-delay	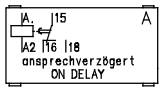	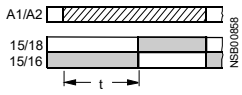
Off-delay with auxiliary supply	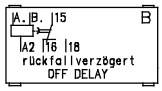	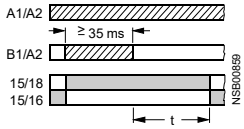
On-delay and off-delay with auxiliary supply ($t = t_{an} = t_{ab}$)	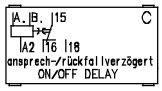	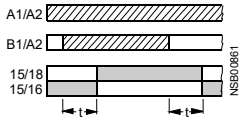
Flashing, start with break (pulse/break 1:1)	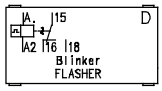	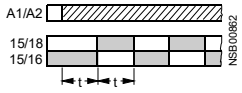
Passing make contact	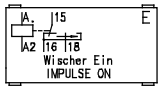	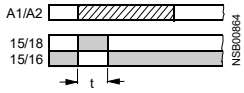
Breaking pulse contact with auxiliary supply	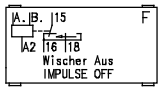	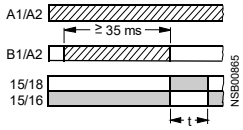
Pulse shaping contact with auxiliary supply	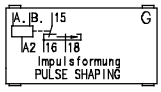	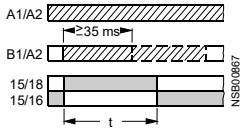
Additive ON-delay with auxiliary voltage	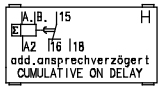	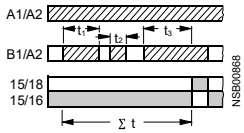

Table 7-2: 3RP20 05-. A (multifunctional) circuit diagrams and function diagrams

The label set, for labeling the set function on the solid state time relay 3RP2005- .B, contains the functions shown in the following table:

Function	Circuit diagram	Function diagram
2 SPDT		time relay energized contact closed contact open
ON-delay	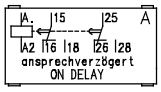	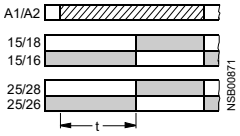
ON-delay and instantaneous contact	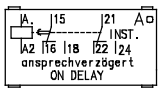	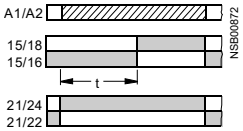
OFF-delay with auxiliary voltage	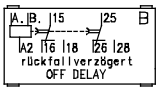	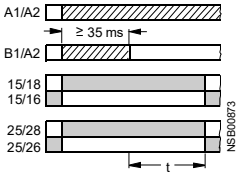
OFF-delay with auxiliary voltage and instantaneous contact	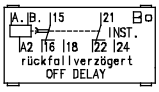	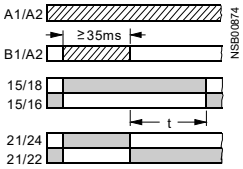
ON-delay and OFF-delay with auxiliary voltage ($t = t_{an} = t_{ab}$)	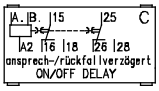	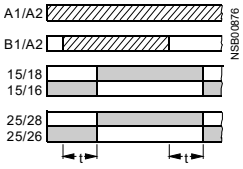
ON-delay and OFF-delay with auxiliary voltage and instantaneous contact ($t = t_{an} = t_{ab}$)	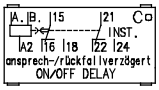	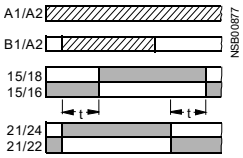
Flashing, start with break (pulse/break 1:1)	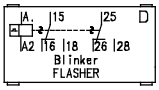	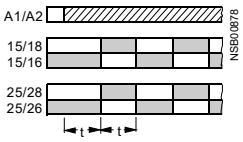
Flashing, start with break (pulse/break 1:1) and instantaneous contact	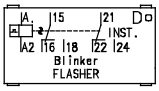	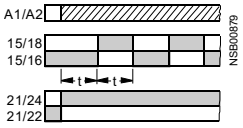

Function	Circuit diagram	Function diagram
Passing make contact	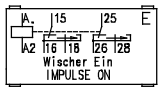	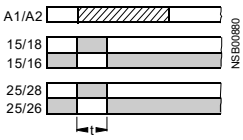
Passing make contact and instantaneous contact	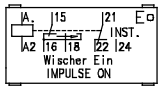	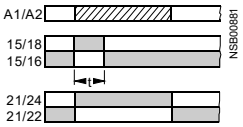
Passing break contact with auxiliary voltage	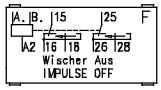	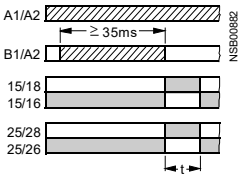
Passing break contact with auxiliary voltage and instantaneous contact	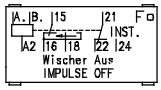	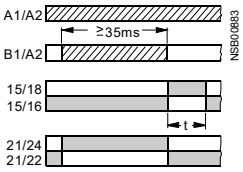
Pulse shaping with auxiliary voltage (creates a pulse at the output irrespective of the length of excitation)	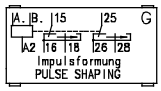	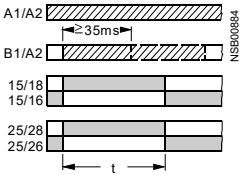
Pulse shaping with auxiliary voltage and instantaneous contact (creates a pulse at the output irrespective of the length of excitation)	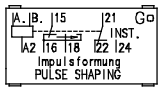	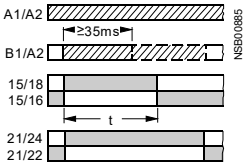
Additive ON-delay with auxiliary voltage and instantaneous contact	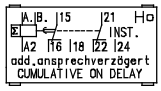	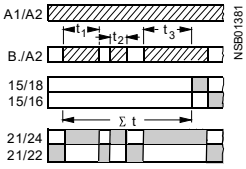
Wye-delta function	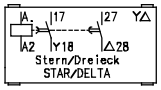	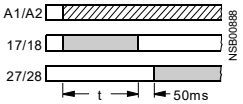

Table 7-3: 3RP20 05-.B (multifunctional) circuit diagrams and function diagrams

Important
The same potential must be applied to terminals A and B.

A./A2 ≙ A1/A2 or A3/A2, depending on the voltage level connected
B./A2 ≙ B1/A2 or B3/A2, depending on the voltage level connected

7.3.2 Multifunctional (3RP15 05 solid-state time relay)

Operating time adjustment

Fifteen time ranges can be set using a rotary switch, ensuring very precise adjustment. The set time range is displayed in a window next to the rotary switch.
The desired runtime can be set accurately by means of a potentiometer (rotary switch for fine adjustment).
In the time range position ∞ the function is executed with an endless time period. This means, for example, that the output relay never switches through when "on-delay" is set and the supply voltage is applied or that the output relay remains continuously on when "making pulse contact" is set.

Important
Changes to the time range are only effective if they are made in a deenergized state.

Example

You want to set a 90 second period:

Step	Procedure	
1		Rotate the time range selector switch until 100 s appears in the adjacent window. This means runtimes of up to 100 seconds can be set.
2	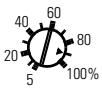	Rotate the potentiometer to 90 %. In other words 90 % (= 90 seconds) of the maximum value (= 100 seconds) is set.

Table 7-4: 3RP15 05 (multifunctional) operating time adjustment

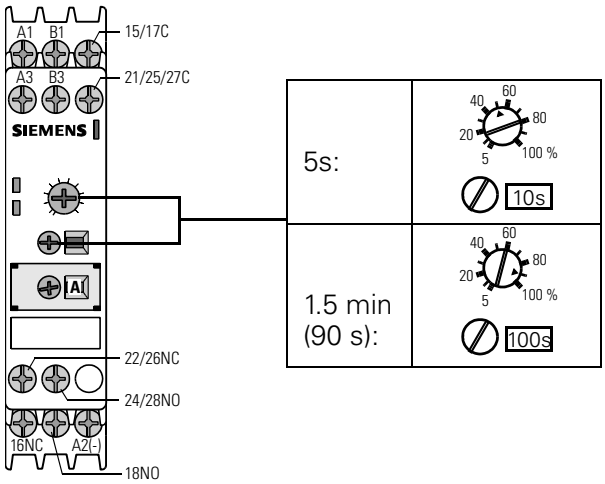

Fig. 7-4: 3RP15 05 (multifunctional) operating time adjustment

Functions

The following can be set by means of a rotary switch.

- Time relay with 1 changeover contact: 8 functions
- Time relay with 2 changeover contacts: 16 functions

Important

Changes to the function are only effective if they are made in a deenergized state.

Function setting

The function is set using a rotary switch and is indicated by an identifying letter in the adjacent window.
The set function can be labeled distinctly with an identification plate with the corresponding function diagram. At the same time, a mechanical code ensures that the correct function is set by ensuring that a label can only be clipped on if the corresponding function is set using the rotary switch.
A label set with function diagrams of all the functions that can be set for the time relay is available as an accessory.
Break the label of the set function out of the label set, and snap it firmly onto the time relay as shown in the following diagram:

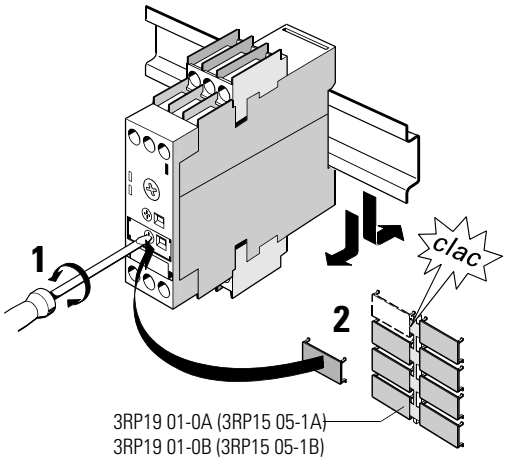

Fig. 7-5: 3RP15 05 (multifunctional) function identification

Identifying letters

The following table lists the identifying letters for the 8 or 16 functions of the solid-state multifunctional 3RP15 05 time relay:

Function	Identifying letter with time relay with 1 changeover contact	Identifying letter with time relay with 2 changeover contacts
On-delay	A	A
Off-delay with auxiliary supply	B	B
On-delay and off-delay with auxiliary supply	C	C
Flashing, start with break	D	D
Making pulse contact	E	E
Breaking pulse contact with auxiliary supply	F	F
Shaping pulse contact with auxiliary supply	G	G
Additive on-delay with auxiliary supply (and immediate switching only H•)	H	H•
On-delay and immediate switching		A•
Off-delay with auxiliary supply		B•
On-delay and off-delay with auxiliary supply and immediate switching		C•
Flashing, start with break, and immediate switching		D•
Making pulse contact and immediate switching		E•
Breaking pulse contact with auxiliary supply and immediate switching		F•
Shaping pulse contact with auxiliary supply and immediate switching		G•
Wye-delta function		▼Y△

Table 7-5: 3RP15 05 (multifunctional) assignment of the identifying letters

The "•" after the identifying letter indicates that the second changeover contact present reacts as an immediate switching contact (controlled by the supply voltage or the start contact depending on the function). If this "•" is not present, the second changeover contact reacts with a time delay like the first changeover contact.

Function diagrams
Circuit diagrams

The following table explains the 8 or 16 functions of the solid-state multi-functional 3RP15 05 time relay using circuit diagrams and function diagrams:

Identifying letter	Device circuit diagrams	Function diagram
A **ON-delay**	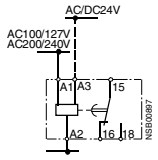	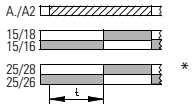
B **OFF-delay with auxiliary voltage**	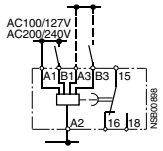	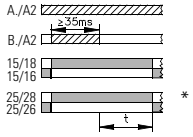
C **ON-delay and OFF-delay with auxiliary voltage ($t=t_{an}=t_{ab}$)**	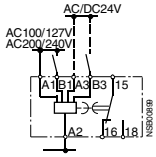	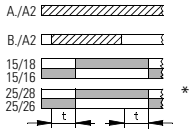
D **Flashing,** **start with break** **(pulse/break 1:1)**	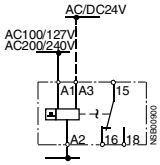	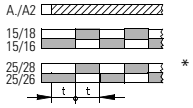
E **Passing make contact**	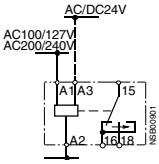	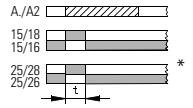
F **Passing break contact with auxiliary voltage**	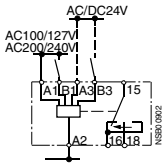	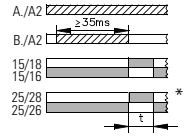
G **Pulse shaping with auxiliary voltage (creates a pulse at the output irrespective of the length of excitation)**	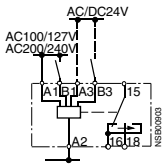	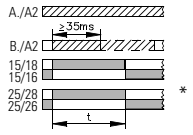
H• **Additive ON-delay with auxiliary voltage and instantaneous contact**	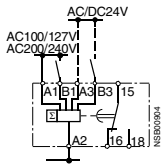	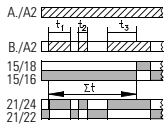

Table 7-6: Function diagrams (3RP15)

Identifying letter	Device circuit diagrams	Function diagram
A• **ON-delay and instantaneous contact**	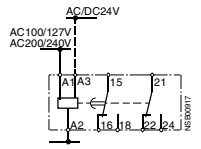	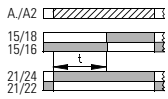
B• **OFF-delay with auxiliary voltage and instantaneous contact**	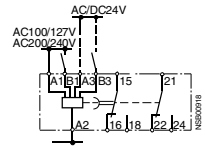	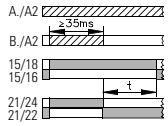
C• **ON-delay and OFF-delay with auxiliary voltage and instantaneous contact ($t=t_{an}=t_{ab}$)**	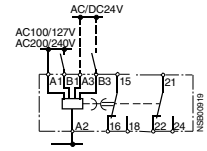	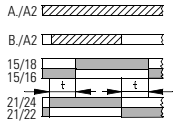
D• **Flashing, start with break (pulse/break 1:1) and instantaneous contact**	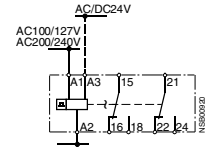	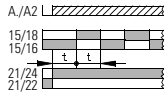
E• **Passing make contact and instantaneous contact**	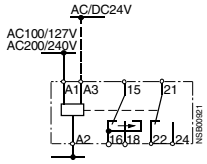	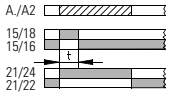
F• **Passing break contact with auxiliary voltage and instantaneous contact**	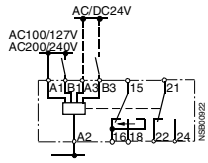	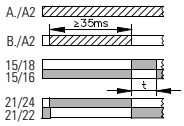
G• **Pulse shaping with auxiliary voltage and instantaneous contact (creates a pulse at the output irrespective of the length of excitation)**	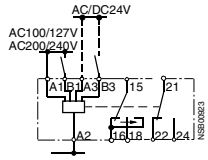	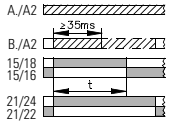
Y△ **Wye-delta function**	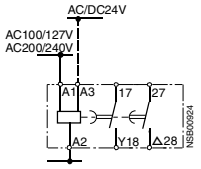	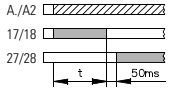

Table 7-6: (cont.) Function diagrams (3RP15)

* Only with devices with 2 changeover contacts

7.3.3 On-delay

3RP20 25 solid-state time relay

The time relay contains 1 changeover contact.

Time ranges

15 time ranges can be set by means of a rotary switch.

Important
Changes to the time range are only effective if they are made in a deenergized state.

Function diagram

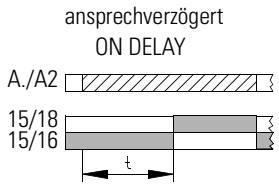

Fig. 7-6: 3RP20 25 function diagram

The 3RP15 11/12/13 solid-state time relay

The time relay contains 1 changeover contact.

Time ranges

Fixed time ranges are offered: 10 s, 30 s, 100 s

Function diagram

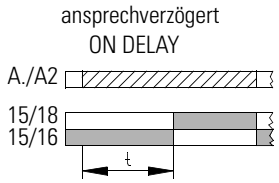

Fig. 7-7: 3RP15 1. function diagram

The 3RP15 25 solid-state time relay

The time relay is available with either 1 or 2 changeover contacts.

Time ranges

Fifteen time ranges can be set by means of a rotary switch.

Important
Changes to the time range are only effective if they are made in a deenergized state.

Function diagrams

The function diagram for the time relay with 1 changeover contact and with 2 changeover contacts:

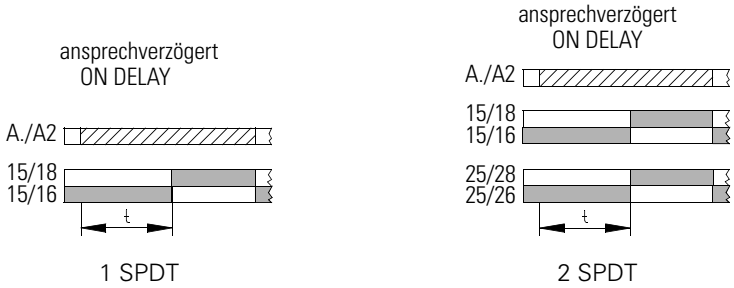

Fig. 7-8: 3RP15 25 function diagram

The 3RP15 27 solid-state time relay (two-wire time relay)

The two-wire time relay is connected in series with the load. The timing period begins after the control supply voltage has been applied. The semi-conductor output then becomes live, and voltage is applied to the load.

Time ranges

Four time ranges can be set by means of a rotary switch.

Important
Attention must be paid to the rated operational current, residual current with unswitched output, and voltage drop in the case of a switched output.

Function diagram

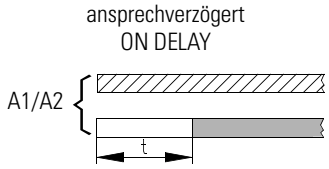

Fig. 7-9: 3RP15 27 Function diagram

7.3.4 Off-delay

The 3RP15 31/32/33 solid-state time relay with auxiliary supply

The time relay contains 1 changeover contact.

Time ranges

Fixed time ranges are offered: 10 s, 30 s, 100 s

Function diagram

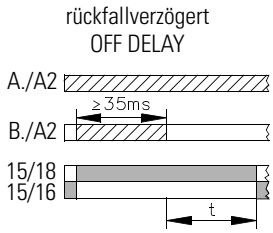

Fig. 7-10: 3RP15 3. function diagram

There is continuous auxiliary voltage (A./A2) at the time relay. If a control supply voltage is applied to the start contact, the output relay switches over.

After the start contact is disconnected, the set runtime starts. The minimum on-time of ≥ 35 ms must be adhered to.

The 3RP15 40 solid-state time relay without auxiliary supply

The time relay is available with either 1 or 2 changeover contacts.

Time ranges

Seven time ranges can be set by means of a rotary switch. Times ranging from 0.05 to 100 s are possible.

Important
Changes to the time range are only effective if they are made in a deenergized state.

Function diagrams

The function diagram for the time relay with 1 changeover contact and with 2 changeover contacts:

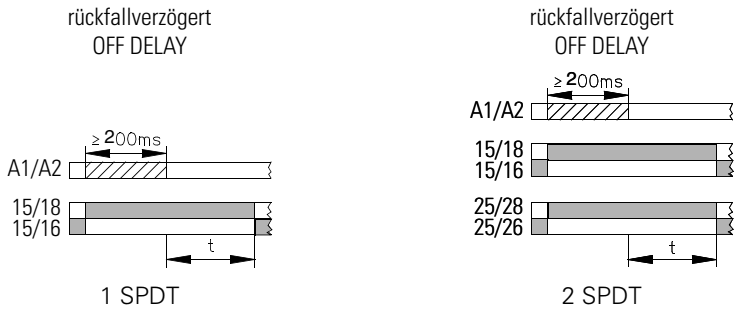

Fig. 7-11: 3RP15 40 Function diagram

Mode of operation

When the rated control supply voltage is applied, the time relay switches over. After the rated control supply voltage has been disconnected, the runtime t starts. After t has finished, the relay switches back to the quiet state. If the minimum on-time is not adhered to, it is ensured that either the timing period will not start or that a started timing period will always be properly completed.
Intermediate states in the function process, such as the relay getting stuck, are successfully prevented.

7.3.5 Clock pulse generator (3RP15 55 solid-state time relay)

Description

The idle time and the pulse time of the clock pulse generator and the time ranges must be set separately.
The pulsing function begins with the break.

The time relay contains a changeover contact.

Time ranges

Fifteen time ranges can be set by means of a rotary switch.

Important
Changes to the time range are only effective if they are made in a deenergized state. A pulse, for example, can be output cyclically for 1 second after a break of 1 hour.

Function diagram

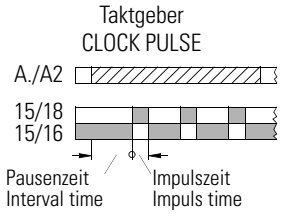

Fig. 7-12: 3RP15 55 function diagram

7.3.6 Wye-delta function (3RP15 74/76 solid-state time relay)

Description

The instantaneous star contact and the time-delayed delta contact have a shared contact root.
To avoid phase short circuits, the switch-over break from star to delta is 50 ms.

Time ranges

The time relay offers a fixed time range: 20 s, 60 s

Function diagram

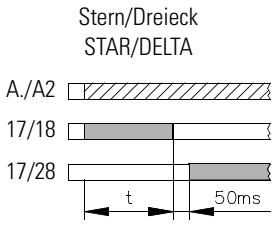

Fig. 7-13: 3RP15 7. function diagram

7.3.7 Wye-delta function with overtravel (3RP15 60 solid-state time relay)

Description

Supply voltage is applied to A./A2 and there is no control signal at B./A2. This starts the ⅄Δ timing period. By applying the control signal to B./A2, the idling time (overtravel time) is started. When the set time t_{Idling} (30 s to 600 s) is completed, the output relays (17/16 and 17/28) are reset. If the control signal is switched off at B./A2 (minimum off-time 270 ms), a new timing period is started.

Time ranges

Star-delta time 1 s to 20 s
Overtravel time: 30 s to 600 s

Function diagram

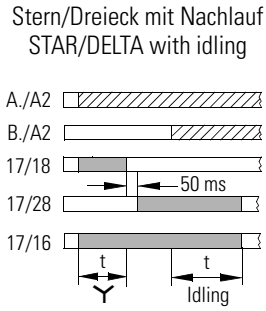

Fig. 7-14: 3RP15 60 function diagram

7.4 Accessories

7.4.1 Accessories for 3RP15 05, 3RP20 05

Label Sets

Two label sets are available to the 3RP15 05 and 3RP20 05 solid-state time relay, multifunction device for labeling, depending on the version (8 functions with 1 changeover contact, 16 functions with 2 changeover contacts:

- 3RP19 01-0A for the 3RP15 05-1A, 3RP20 05-.A, electronic relays, 1 SPDT
- 3RP19 01-0B for the 3RP15 05-1B, 3RP20 05-.B, electronic relays, 2 SPDT

The following table shows you how to set the function on the time relay and put on the label:

Illustration	Step	Procedure
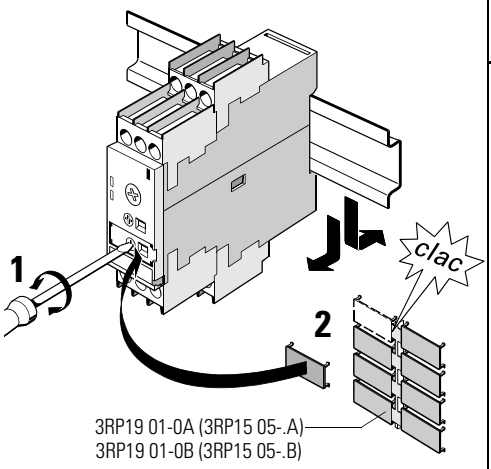	1	The desired function is set on the potentiometer of the time relay using a screwdriver.
	2	The corresponding label identifying the set function is clipped on.

Table 7-7: Label set (3RP15, 3RP20 05)

Sealable cover

All 3RP15 solid-state time relays can be secured against unauthorized adjustment by means of a sealable cover (3RP19 02). The following table and illustration explain how to do this:

Illustration	Step	Procedure
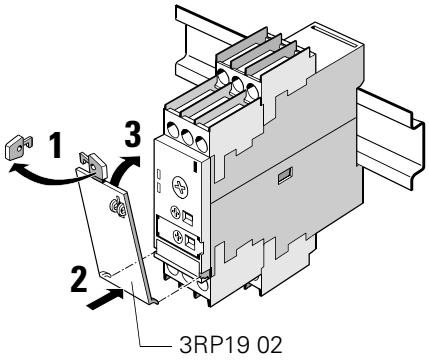	1	Break off the key for interlocking from the upper edge of the cover.
	2	Use the hook to put the cover in the openings to the side of the device identification label.
	3	Move the cover toward the time relay.
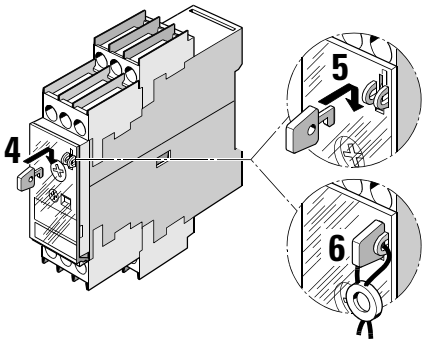	4	Hook the key onto the time relay through the slit in the cover to attach the cover to the time relay.
	5/6	Pull the seal through the opening of the key.

Table 7-8: Sealable cover

Push-in lugs for screw-type attachment

Push-in lugs (3RP19 03) are available for panel mounting:

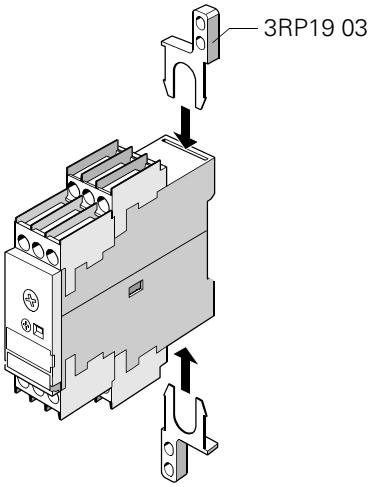

Fig. 7-15: Panel mounting

7.5 Mounting and connection

7.5.1 Mounting

3RP20

DIN rail mounting

The 3RP20 time relays can be snapped onto the 35 mm DIN rails and removed without tools in acc. with EN 50 022.
Place the time relay on the upper edge of the rail, and press it downward until it snaps onto the lower edge of the rail. To remove the time relay, press it downward to release the tension of the spring, and the time relay can be removed.

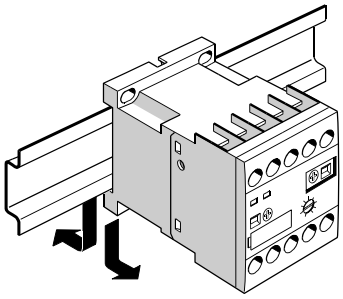

Fig. 7-16: 3RP20: mounting on and removal from a 35 mm rail

Panel mounting

The following is required for panel mounting of the 3RP20 time relay:
- 2 M4 screws, diagonal
- Maximum tightening torque of 10.5 Nm
- Washers and spring lock washers must always be used
- The distance to grounded parts at the side must be more than 6 mm

3RP15

DIN rail mounting

The 3RP15 time relays can be snapped onto the 35 mm DIN rails and removed without tools in acc. with EN 50 022.
Place the time relay on the upper edge of the rail, and press it downward until it snaps onto the lower edge of the rail. To remove the time relay, press it downward to release the tension of the spring, and the time relay can be removed.

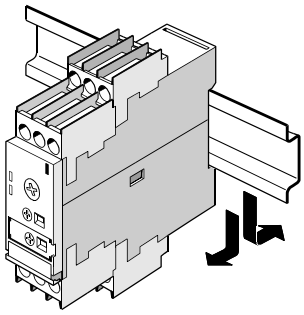

Fig. 7-17: DIN rail mounting

Panel mounting

Panel mounting is possible by means of push-in lugs for M4 screws (application, see under Section 7.4 "Accessories)"

7.5.2 Connection

The 3RP20 solid-state time relays are available with SIGUT® terminals with plus/minus Pozidriv 2 screws and also with Cage Clamp terminals.
The 3RP15 solid-state time relays are available:

- With SIGUT® terminals with plus/minus Pozidriv 2 screws
- With Cage Clamp terminals

Conductor cross-sections

The following table lists the permissible conductor cross-sections for the 3RP1 solid-state time relays. The specifications apply to control and load current connections.

	3RP20.5-1	3RP20.5-2 (springloaded terminal)	3RP15	3RP15..-2 (springloaded terminal)
Ø 5 ... 6 mm / PZ2	0.8 to 1.2 Nm 7 to 10.3 lb·in	—	0.8 to 1.2 Nm 7 to 10.3 lb·in	—
10	2 x (0.5 to 1.5 mm²) 2 x (0.75 to 4 mm²)	2 x (0.25 to 2.5 mm²)	1 x (0.5 to 4 mm²) 2 x (0.5 to 2.5 mm²)	2 x (0.25 to 1.5 mm²)
10	2 x (0.5 to 2.5 mm²)	2 x (0.25 to 1 mm²)	1 x (0.5 to 2.5 mm²) 2 x (0.5 to 1.5 mm²)	2 x (0.25 to 1 mm²)
10	—	2 x (0.25 to 1.5 mm²)	—	2 x (0.25 to 1.5 mm²)
AWG	2 x (18 to 14)	2 x (24 to 14)	2 x (20 to 14)	2 x (24 to 16)

Table 7-9: Permissible conductor cross-sections for control and load current connections

The following illustration shows you the springloaded terminal:

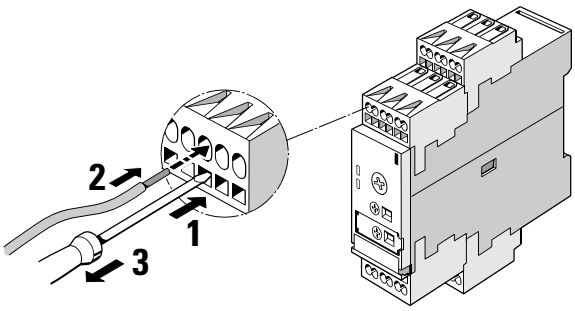

Fig. 7-18: Connection of the springloaded terminal

7.5.3 Circuit diagrams

3RP20

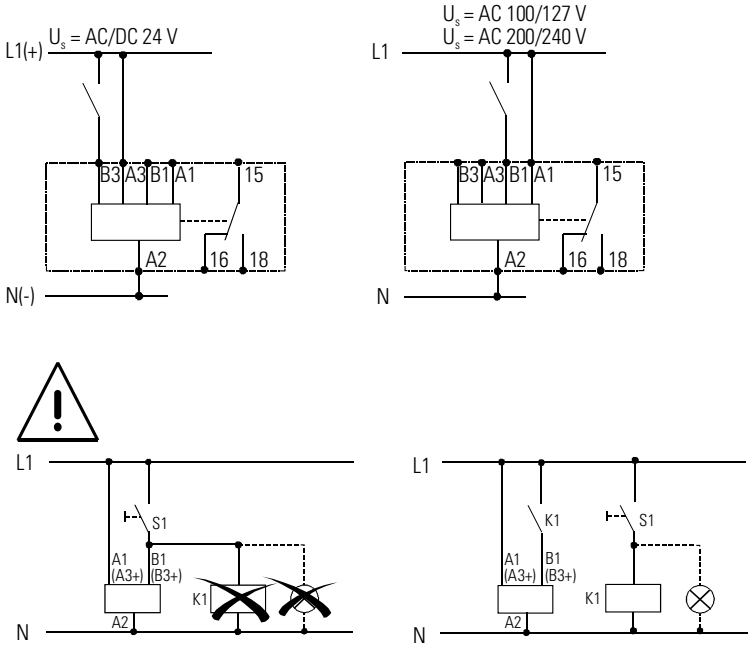

3RP20 circuit diagrams

3RP15

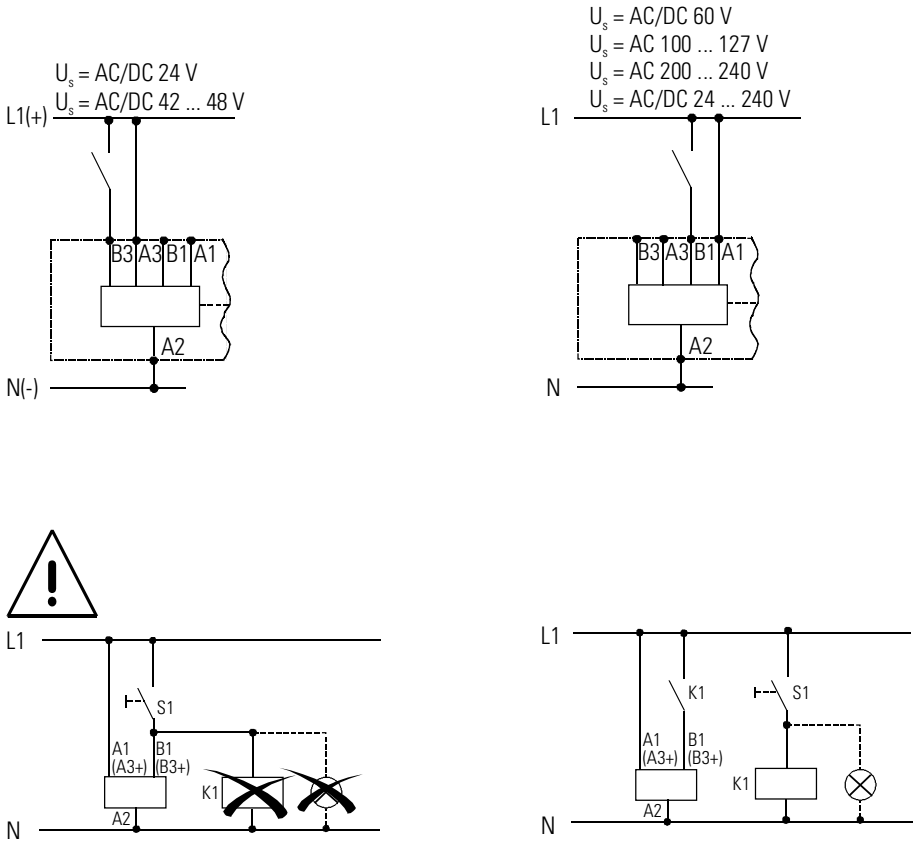

3RP15 circuit diagrams

7.6 Dimensional drawings (dimensions in mm)

3RP1/2 time relay

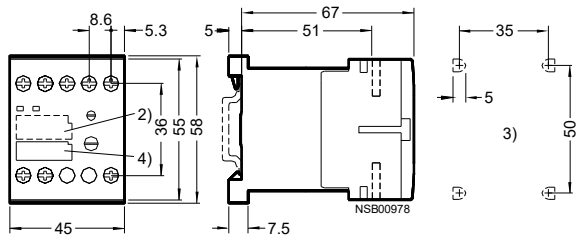

3RP20

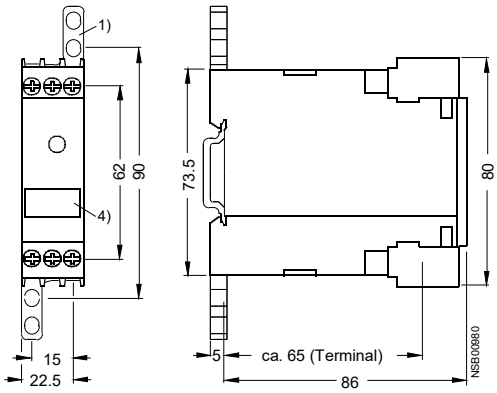

3RP15, 1 changeover contact without auxiliary supply[5)] , clock pulse generator, wye-delta function

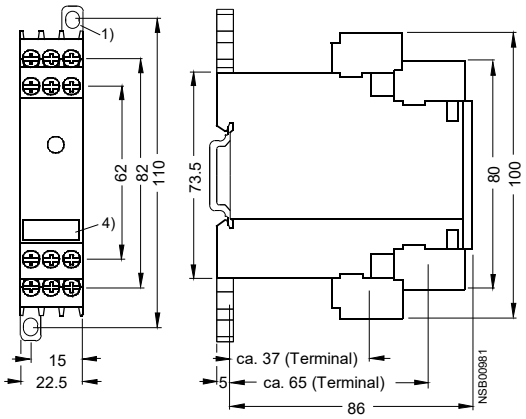

3RP15, 1 and 2 changeover contact devices with auxiliary supply

1) Push-in lug for screw-type attachment
3) Coding plug (with 3RP10) or identification label
4) Drilling pattern
5) Except 3RP15 05-1A.30 two-wire design
6) Identification label

7.7 Technical Data

Technical Data according to IEC 61812-1/DIN VDE 0435 part 2021

Type			3RP20 05 3RP20 25	3RP15 05 3RP15 31 3RP15 32 3RP15 33	3RP15 11 3RP15 12 3RP15 13 3RP15 25 3RP15 55	3RP15 40	3RP15 60	3RP15 74 3RP15 76	3RP15 27
Rated insulation voltage		AC V	300; 500 with 3RP1505-1BT20						
Pollution degree 3 Overvoltage category III in acc. with DIN VDE 0110									
Excitation operating range [1]			0.85 to 1.1 x U_s with AC; 0.8 to 1.25 x U_s with DC 0.95 to 1.05 times the rated frequency						
Rated power		W	1	2	2	2	2	2	1
Power input at 230 V AC, 50 Hz		VA	4	6	6	2 [2]	6	6	1
Rated operational currents I_e									
AC-15 at 230 V AC, 50 Hz		A	3[3]						—
AC-14; DC-13			—						0.01 to 0.6
DC-13 at 24 V			1						—
DC-13 at 48 V			0.45						—
DC-13 at 60 V			0.35						—
DC-13 at 110 V			0.2						—
DC-13 at 230 V			0.1						—
DIAZED fuse [4]									
Performance class	gL/Gg	A	4						—
Switching frequency									
• Loaded with I_e 230 VAC		1/h	2500						5000
• Loaded with 3RT10 16 contactor, 230 V AC		1/h	5000						5000
Recovery time		ms	150 [5]				300	150	50
Minimum on-time		ms	35	35 [6]	—	200 [7]	—		
Residual current		mA							≤ 5
With output not switched through									
Voltage drop		V							≤ 3.5
Switched through									
Short-term current-carrying capacity		A							10 (to 10 ms)
Setting accuracy			typical ±5 %						
Related to the end of scale value									
Repeatability			≤ ±1 %						
Mechanical service life	Operating cycles		30 x 10^6						100 x 10^6
Permissible ambient temperature	In operation	°C	-25 to +60						
	During storage	°C	-40 to +85						
Degree of protection			IP40 Deckel						
In acc. with EN 60 529			IP20 terminals						
Shock resistance		g/ms	15/11						
Half-sine in acc. with IEC 60 068-2-27									
Vibration resistance in acc. with IEC 60 068-2-6		Hz/mm	10-55 / 0.35						
EMC tests		IEC 61 000-6-2 / EN 50 081-1							
In acc. with the basic specification									

1) If not specified otherwise
2) Maximum making current peak 1 A/100 ms
3) With 3RP15 05-.R: NC contact –> I_e = 1 A
4) Without any welding in acc. with IEC 60 947-5-1.
5) With 3RP15 05.-BW30/ .AW30/ .RW30 and 3RP15 25-.BW30 voltage-dependent 10 to 250 ms.
6) Minimum on-time with 3RP15 00-. BW30 150 ms until instantaneous contact is switched.
7) Adhere to minimum on-time for problem-free functioning.

8

3RW3 Semiconductor motor control unit (soft starter)

Section	Subject	Page
8.1	**Specifications/regulations/approvals**	**8-3**
8.2	**Device description**	**8-5**
8.2.1	Physical principles	8-6
8.2.2	General device description	8-10
8.2.3	Comparison of the 3RW3 semiconductor motor control unit (soft starter) with the SIKOSTART 3RW22 and SIKOSTART 3RW34 motor control units	8-14
8.2.4	Comparison of the 3RW3 semiconductor motor control unit (soft starter) with the 3RA star-delta combination	8-16
8.2.5	Notes on configuration	8-16
8.3	**Application and use**	**8-18**
8.3.1	Areas of application and criteria for selection	8-18
8.3.2	Installation guidelines	8-18
8.3.3	Overview tables: correction factors	8-21
8.3.3.1	3RW30/31 soft starters in a stand-alone installation	8-21
8.3.3.2	3RW30/31 soft starters in combination with the 3RV1 circuit breaker	8-22
8.3.3.3	Combining the 3RT contactor with the 3RU1 thermal overload relay and 3RW3 soft starter	8-24
8.3.3.4	Combining the 3RT contactor with the 3RB10 electronic overload relay and 3RW3 soft starter	8-26
8.3.4	Circuit example	8-29
8.3.5	Commissioning	8-30
8.3.6	Event messages and diagnostics	8-32
8.3.7	Timing diagram	8-33

Section	Subject	Page
8.4	**Accessories**	**8-35**
8.5	**Mounting and connection**	**8-37**
8.5.1	Mounting	8-37
8.5.2	Connection	8-37
8.5.3	Circuit diagrams	8-38
8.6	**Dimensional drawings (dimensions in mm)**	**8-41**
8.7	**Technical specifications**	**8-42**
8.7.1	Control electronics/power electronics	8-42
8.7.2	Short-circuit protection and fuse coordination	8-45
8.7.3	Site altitude	8-50
8.7.4	Specifications in acc. with IEC	8-51
8.7.5	Specifications in acc. with NEMA	8-52

8.1 Specifications/regulations/approvals

The 3RW3 semiconductor motor control units, referred to below more succinctly as soft starters, meet the UL and CSA requirements.

UL/CSA	UL 508
Degrees of protection offered by housings	EN
DIN standard rail	EN 50 022
Electronic Motor control units	IEC 60947-4-2
Shock protection	IEC 60947-1 and DIN 40050
EMC	IEC 60801-4-2 (draft)
General specifications	EN 602 69-1A1
Control devices and switching elements	EN 602 69-1A1
Gost	Approved by Gost
CTic	EMC compliance marking for Australia (similar to CE marking)

Table 8-1: Standards, certificates, and approvals, 3RW3

Normal switching duty

The 3RW3 soft starters can be used for normal switching duty in acc. with DIN VDE 0100 Part 460:
A switch for normal switching duty must be provided for all circuits that are to be switched independently of other parts. Switches for normal switching duty do not **necessarily all switch active conductors** of a circuit.

Isolation

The soft starters do not meet the requirements for isolation in acc. with DIN VDE 0100 Part 460 and EN 60 947-1:
Every circuit must be capable of being isolated from the active conductors of the power supply.
Circuit groups can be isolated by a common device if this is permitted by the operating conditions. In the open position, devices with an isolating function must have a corresponding isolating distance and an indicator showing the positions of the moving contacts.

Warnings

Caution

The devices are all carefully tested at the factory and are not shipped unless they are found to be in proper working order. However, they may be subjected to stresses during transportation over which we have no control.

Consequently, the impulse series relays in the main circuit may be in an undefined switching state.

In the interests of complete safety, the following procedure should be used at commissioning or after the replacement of the SIRIUS soft starter:

First, apply the supply voltage in order to put the impulse series relays in a defined switching state.

Then, switch the main circuit on.

If you deviate from this procedure, the motor can be switched on inadvertently and cause damage to people or parts of the system.

Important

The 3RW3...-1.B1. soft starter was built as a class A device. Using this product in residential buildings could cause radio interference.

8.2 Device description

The SIRIUS 3RW3 soft starters are part of the SIRIUS modular system. They are compatible with the other SIRIUS switching devices.

The possible combinations are:
- 3RW3 soft starter + 3RV circuit breaker
- 3RW3 soft starter + 3RU/3RB overload relay + 3RT contactor

The link modules used for combinations of contactors and circuit breakers are used for this (see Section 8.3.2, "Installation guidelines").

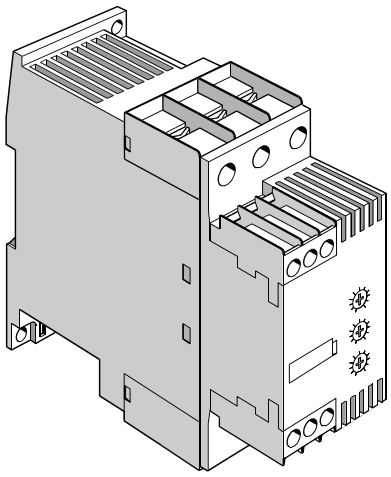

Fig. 8-1: 3RW3 soft starter

3RW30/31 frame sizes

The 3RW30 soft starter is available in four frame sizes: S00, S0, S2, and S3.
The 3RW31 soft starter is available in frame size S0.
The following table contains the power ranges of the various frame sizes (all specifications apply to U_N = 400 V and 40 °C ambient temperature):

Frame size S00	Frame size S0	Frame size S2	Frame size S3
1.1 - 4 kW	5.5 - 11 kW	15 - 22 kW	30 - 55 kW
6 - 9 A	12.5 - 25 A	32 - 45 A	63 - 100 A
(W x H x D) (mm) 45 x 97.5 x 93	(W x H x D) (mm) 45 x 125 x 119	(W x H x D) (mm) 55 x 160 x 143	(W x H x D) (mm) 70 x 170 x 178

Table 8-2: 3RW3, frame sizes

8.2.1 Physical principles

Starting current

Three-phase current asynchronous motors have a high inrush current $I_{(starting)}$. This inrush current can be between three and fifteen times as high as the rated operational current, depending on the type of motor. A figure between seven and eight times the rated operational current can be postulated as typical.

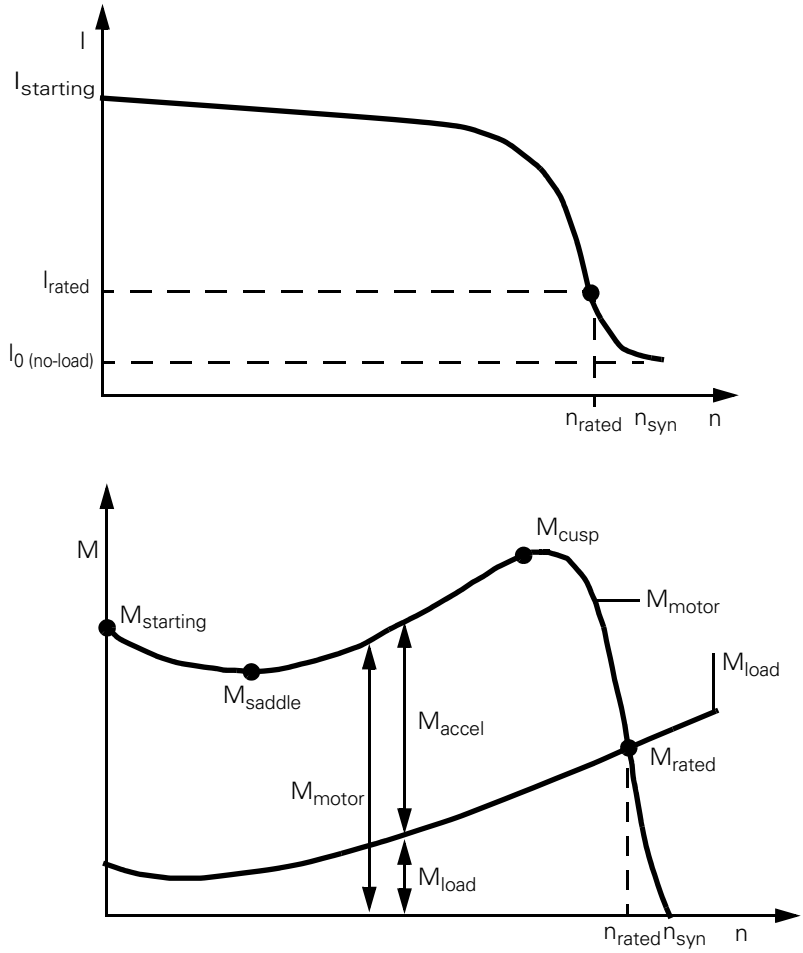

Fig. 8-2: Typical current and torque curve of a three-phase asynchronous motor

Important
This starting current must be taken into consideration in the design of the supply network, among other things by adapting the supply (high heat development) and the fusing (inadvertent tripping of the fuses).

Reducing the starting current

There are various ways of reducing the starting current:
- By star-delta starter
- By frequency converter
- By soft starter

Star-delta starter

After a delay, the motor windings are switched from a star to a delta configuration. The motor current for star starting is only about 1/3 of that required for delta starting (motor torque, too, is reduced to approximately 1/3 of the delta torque).

Disadvantages:

- 6 motor cables are necessary
- Switching surges occur (in the current and torque transients)
- The startup cannot be adapted to the system environment
- Installation is relatively complicated and time-consuming
- More space is needed in the cubicle

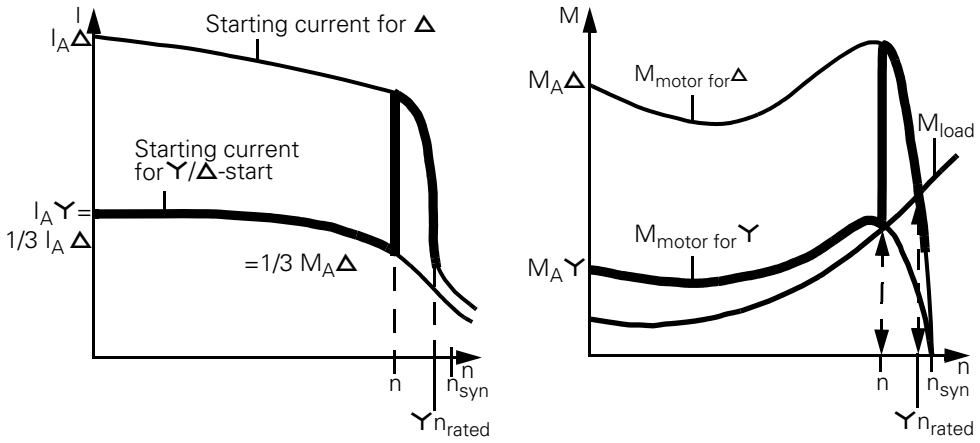

Fig. 8-3: Current and torque curves for star-delta starting

Frequency converter

A frequency converter converts the AC voltage from the grid to direct voltage, which can then be converted to any voltage and frequency. The illustration below shows how a frequency converter works:

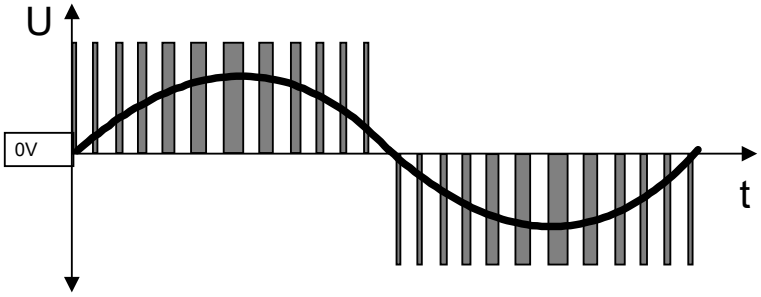

Fig. 8-4: Method of operation of a frequency converter

Disadvantages:

- Relatively complicated wiring needed in order to meet radio interference suppression requirements; filters are often essential.
- Line capacitances limit the lengths of motor feeder cables; it may be necessary to use chokes, sinus filters, or even dV/dt filters.
- Expensive
- System startup is complex and time-consuming on account of the multiplicity of operating parameters.
- It can be necessary to use shielded motor feeder cables.

Advantages:

- Motor speed is variable; speed can be accurately pegged at constant levels.

The U/f ratio remains virtually constant. It is therefore possible to achieve high torques at relatively low currents.

Soft starter

With a soft starter, motor voltage is increased from a selectable starting voltage to the rated voltage by phase firing within a defined starting time. Motor current is proportional to the motor voltage, so the starting current is reduced by the factor of the defined starting voltage.
The illustration below shows how the 3RW3 soft starter works:

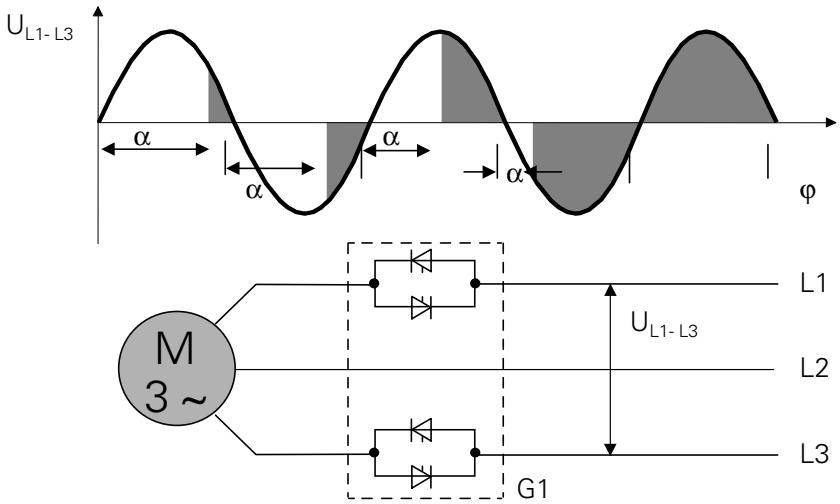

Fig. 8-5: Phase firing of the supply voltage by semiconductor elements in the 3RW3 soft starter

Example:
Starting voltage 50 % of U_e => starting current equals 50 % of the motor starting current for direct-on-line starting.

A soft starter also reduces motor torque. This is the reason why a soft-started motor does not jerk into action.
The relationship is as follows: The motor torque is proportional to the square of the motor voltage.

Example:
Starting voltage 50 % of U_e => starting torque 25 % of the starting torque for direct-on-line starting.

Advantages:
- Less space needed in the cubicle
- No protective circuits (e.g. filters) necessary to comply with the radio interference suppression specifications (class A; in 24 V UC control voltage version also class B)
- Lower installation costs
- Straightforward system startup
- Only 3 motor feeder cables, half as many as are needed for a star-delta starter
- Adjustment options permit adaptation to the system

Disadvantages:
- Long-term speed settings not possible
- Lower torque at reduced voltage

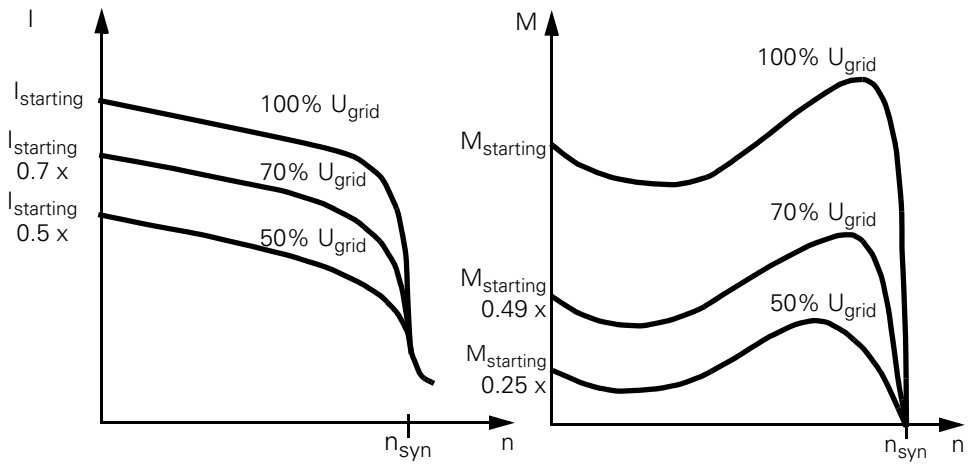

Fig. 8-6: Current and torque curves for a soft starter

8.2.2 General device description

The SIRIUS modular system offers a variety of alternatives for load feeders. In addition to the star-delta starters (see Chapter 5, "3RA fuseless load feeders"), the SIRIUS 3RW3 soft starters are also available.
The 3RW3 soft starters can be combined with the following SIRIUS devices:

- 3RT contactors
- 3RV circuit breakers
- 3RU thermal overload relays
- 3RB10 electronic overload relays

They are all mounted and connected up in the same way.
Please note the relevant guidelines in Section 8.3.2.

Functions of the load feeder

Normal switching duty

Normal switching duty of a circuit can, according to the definitions of isolation and normal switching data in DIN VDE 0100 (see Section 8.1), be implemented with a contactor or a soft starter alone.

Isolation

According to DIN VDE 0100, isolation from the supplying network cannot be provided by a semiconductor element (i.e. soft starter, frequency converter, contactor, or similar).
To implement isolation from the supplying network, a 3RV circuit breaker (or another isolating device that fulfills the requirements of DIN VDE 0100) must be used in addition to the contactor or soft starter. A contactor alone in combination with the soft starter is not enough.
Both isolation and normal switching duty can be implemented quickly and easily with the 3RW3 soft starter in combination with the modules from the SIRIUS modular system.

Variants

The electronic soft starters are available in two variants:

Standard 3RW30 variant
The standard 3RW30 variant is used for single-speed motors. This variant is available in all four frame sizes. The starting voltage U_s, starting time t_{Ron}, and coasting-down time t_{Roff} can be set independently of each other on the device. The device is switched on by means of a cycling contact IN.

3RW31 special variant
The 3RW31 special variant cycles pole-changing motors (Dahlander winding). The following can be set independently of each other:
- Starting voltage U_s
- Starting time of initial speed t_{R1}
- Starting time of second speed t_{R2}

The device does not have a coasting-down function. The set starting voltage applies to both ramp times t_{R1} and t_{R2}.
The ramp time is selected by means of two inputs, IN1 and IN2, that switch the soft starter on.
The devices of the 3RW31 series are only available in frame size S0.

Settings

The devices can be set as follows:
3RW30
By means of 3 potentiometers for setting:
- Starting time in the range from 0 to 20 seconds
- Starting voltage in the range from approx. 30 to 100 % of the rated voltage of the motor
- Coasting-down time in the range from 0 to 20 seconds

3RW31
By means of 3 potentiometers for setting:
- Starting time 1 in the range from 0 to 20 seconds
- Starting voltage in the range from approx. 30 to 100 % of the rated voltage of the motor
- Starting time 2 in the range from 0 to 20 seconds

A special software program ensures that progressive ramp times are set. Short times of up to 5 seconds can thus be set very precisely.

Auxiliary contacts

3RW30

In the case of frame sizes S0 to S3, the following auxiliary contacts are integrated:

- "ON": When triggered, the latching signal is used for locking by means of a simple on/off pushbutton (contact designation 13/14).
- "BYPASSED": With the end-of-startup signal, control valves can be addressed after soft starting of a pump, for example, in order to enable pumping (contact designation 23/24).

The devices of frame size S00 do not have any auxiliary switches.

3RW31

The 3RW31 does not have any auxiliary contacts.

Soft starting function

Torque-reduced start for three-phase asynchronous motors:
Triggering is two-phase, which means that the current is kept low throughout the run-up phase. Current peaks such as those that occur in a star-delta start at the changeover from star to delta are prevented by continuous voltage management.
Transient current peaks (inrush peaks) are automatically avoided in each switch-on procedure by a special control function of the power semiconductors.

Soft coasting-down function

The integrated soft coasting-down function prevents the drive coming to an abrupt halt when the motor is switched off.

3RW30 time ramps

The following graphics show the time ramp of the 3RW30 and the timing diagram of the auxiliary contacts:

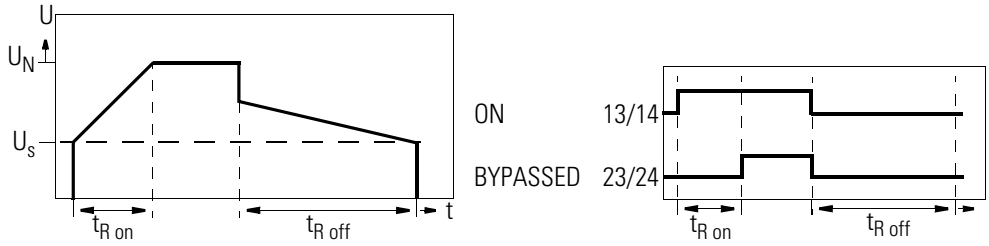

3RW30: Time ramp

Timing diagram of the auxiliary contacts

Fig. 8-7: Time ramp/timing diagram, 3RW30

The graphic below shows the time ramp of the 3RW3:

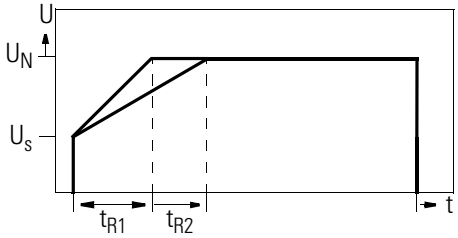

Fig. 8-8: Time ramp, 3RW31

Accessories

A fan can be snapped into the soft starter housing of frame sizes S0 to S3 from below. This brings the following benefits:

- Improved range of options for the installation position
- Increase in the switching frequency (see Section 8.3.2, "Installation guidelines")

In the case of frame sizes S0 and S2, extended terminal covers can be mounted on the box covers in order to cover the cable ends and keep them safe from fingers. These are identical to the extended terminal covers of the SIRIUS 3RT contactors of the same frame sizes.
In the case of frame size S3, terminal covers are available for lug connection or bar connection. These, too, are identical to the accessory parts of the corresponding SIRIUS contactor size.
See Section 8.4 for details of other accessories.

Mounting

The devices are attached to the 3RV circuit breakers by means of a link module and are thus connected mechanically and electrically. This link module is identical to the one that is used for the corresponding contactor/circuit-breaker combinations. This installation variant offers all the advantages of a fuseless load feeder.

Link modules

The following link modules are used to combine 3RW3 soft starters and 3RV1 circuit breakers:

Frame size	Link module
S00	3RA1911-1A
S0	3RA1921-1A
S2	3RA1931-1A
S3	3RA1941-1A

Table 8-3: Link modules

Connection

The 3RW3 electronic soft starters are available with screw-type terminals. Plus-minus POZIDRIV 2 screws are used.
The SIGUT terminal system is used (captive screws, contacts open on delivery, etc.).

8.2.3 Comparison of the 3RW3 semiconductor motor control unit (soft starter) with the SIKOSTART 3RW22 and SIKOSTART 3RW34 motor control units

Soft starters are available for different applications.
The following graphic provides an overview of the different soft starters:

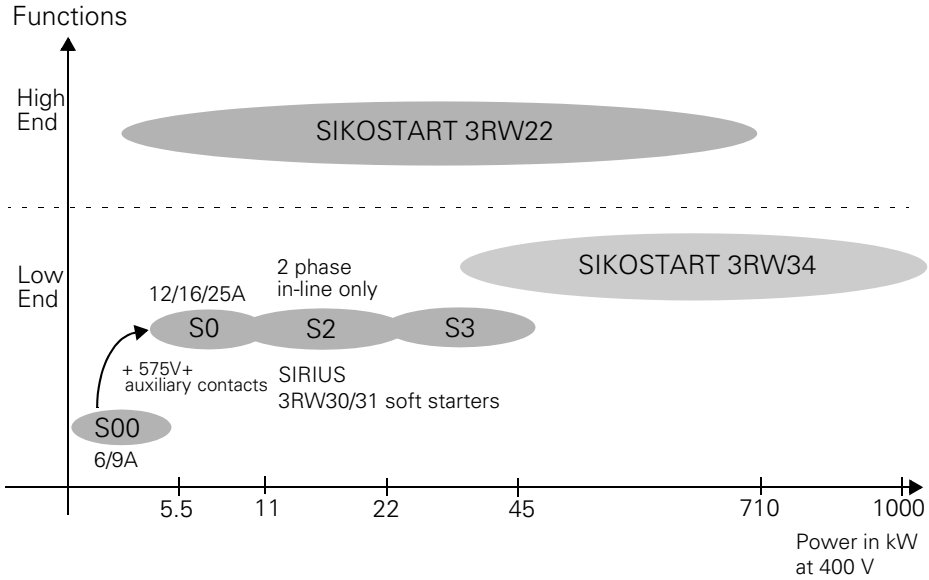

Fig. 8-9: Overview of soft starters

SIKOSTART 3RW22

The SIKOSTART 3RW22 is suitable for drives that place high demands on the functionality of the starter. It covers a power range from 3 kW to 710 kW (at 400 V).

SIKOSTART 3RW22 offers the following:
- Soft starting and soft coasting down
- Break-loose torque
- DC brakes
- Energy-saving operation
- Temperature monitoring
- Operation using a PC and an RS232 interface
- Selection and configuration program
- Current and voltage limitation
- Pump functionalities (e.g. pump coasting down)
- Startup detection
- Three parameter sets
- Different coasting-down types
- Electronic device overload protection

The SIKOSTART 3RW22 application manual presents the various application areas and circuit variants (order no. E20001-P285-A484-V3).

SIKOSTART 3RW34

The SIKOSTART 3RW34 is suitable for drives with low demands in terms of the functionality of the soft starter. The SIKOSTART 3RW34 is very similar to the SIRIUS 3RW3 soft starter in terms of its operation and configuration. It covers a power range of up to 1000 kW (400 V).
The functions of the 3RW34 are as follows:

- Soft starting and soft coasting down
- 2 circuit variants: standard and root 3 circuits
- Three-phase control
- Optional AS-Interface bus control

You will find the technical specifications and a detailed description of the 3RW34 in the document describing SIKOSTART 3RW22/3RW34 solid-state motor controllers (order no.: E20001-A200-P302).

SIRIUS 3RW3 soft starter

The SIRIUS 3RW3 soft starter covers the power range from 1.5 kW to 45 kW.
Power semiconductors always exhibit power loss. This manifests itself in heat generation. In order to keep this power loss as low as possible, the semiconductors are bypassed by relay contacts after the motor has started up. The device's heat sink and its dimensions can thus be smaller than they otherwise would be. In addition, it is necessary to use a bypass contactor, which bypasses the line semiconductors in the conventional configuration.
For further processing in the system controller, the device offers two relay outputs:

- "ON" contact (terminals 13/14), which can be used, for example, to control the soft starter by button (locking)
- "BYPASSED" contact (terminals 23/24), which signals the completion of startup (e.g. in order to switch a solenoid valve after a soft-started pump has started up)

For drives in this power range, good motor startups can be achieved with a two-phase controller.
In the case of a two-phase controller, semiconductor elements are only used in two phases in order to reduce motor current and motor voltage in all three phases. The third phase is bypassed internally in the soft starter.

8.2.4 Comparison of the 3RW3 semiconductor motor control unit (soft starter) with the 3RA star-delta combination

The comparison of soft starter and star-delta combinations shows that the 3RW3 has the following advantages (example here 22 kW):

3RW3 soft starter	3RA star-delta starter
Width: 55 mm	Width: 165 mm
Wiring: 3 motor supply leads	Wiring: 6 motor supply leads
Selectable startup parameters	None
Minimum current values at startup	Fixed current ratios ($I_Y = 1/3 I_\Delta$)
No dangerous switchover current peaks	Switchover current peaks when switching from star to delta
Special variant for Dahlander motors	—
Soft coasting-down function	—

Table 8-4: Comparison of 3RW3/3RA

8.2.5 Notes on configuration

In order for a motor to reach its rated speed, motor torque at any given time during startup must be greater than the torque needed by the load, since otherwise a stable operating point would be reached before the motor achieved its rated speed (the motor would "drag to a stop"). The difference between motor torque and load torque is the accelerating torque that is responsible for the increase in the speed of the drive. The lower the accelerating torque, the longer the motor needs to run up to its operating speed.

Starting torque

Reducing the terminal voltage of a three-phase asynchronous motor reduces the motor's starting current and the starting torque.
Current is directly proportional to voltage, whereas voltage is proportional to the square root of motor torque.

Example:
Motor = 55 kW, rated current = 100 A, starting current = 7 x rating current, motor torque = 355 Nm, starting torque = 2.4 x rated torque
Settings for the soft starter: starting voltage 50 % of rated voltage for motor
The reductions are thus as follows:

- The starting current is reduced to half the starting current for a direct start: 50 % of (7 x 100 A) = 350 A
- Starting torque is reduced to 0.5 x 0.5 = 25 % of the starting torque for a direct start: 25 % of 2.4 x 355 Nm = 213 Nm

Note
On account of the fact that the starting voltage is proportional to the square root of the motor torque, it is important to ensure that the starting voltage is not too low. This applies particularly for a pronounced saddle torque, the lowest motor torque that occurs during run-up to rated speed.

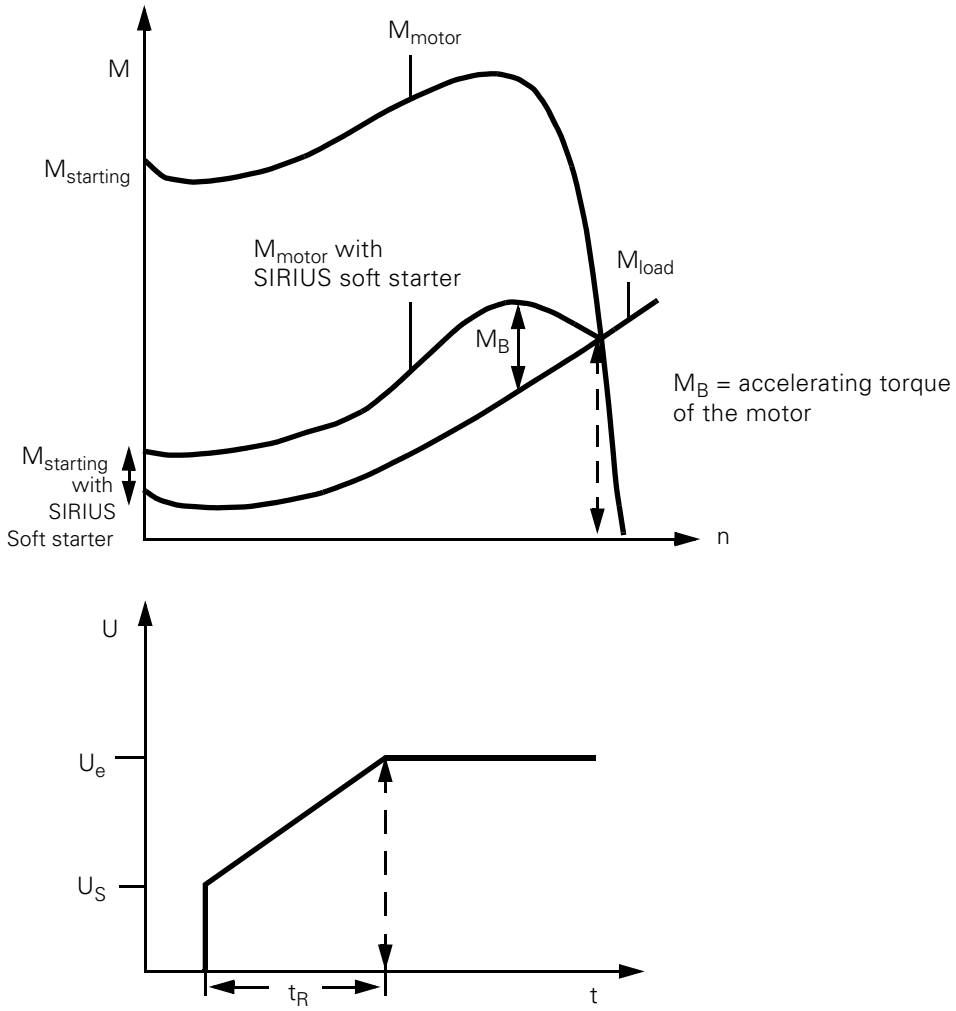

Fig. 8-10: Load and motor torques and motor terminal voltage for operation with soft starter

Criteria for selection

Note
In the case of the SIRIUS 3RW30/31 soft starters, the corresponding soft starter must be selected on the basis of the rated current for the motor (the rated current of the soft starter must be ≥ the rated current for the motor).

The 3 potentiometers on the starter are for setting the starting voltage, the starting time, and the coasting-down time.
The soft starter is correctly set when the motor starts smoothly and runs up rapidly to its rated speed.
Ramp times of up to 20 seconds can be set.

8.3 Application and use

8.3.1 Areas of application and criteria for selection

The SIRIUS 3RW3 soft starters offer an alternative to star-delta starters (see Section 8.2.4 for a comparison and the advantages).
The most important advantages are soft starting and soft coasting-down, interruption-free switching without current spikes that could interfere with the supply system, and compact dimensions.
Many drives that needed frequency converters in the past can be changed to soft-start operation with the 3RW3, if the applications do not call for variations in speed.

Applications

Typical applications include, for example:

Conveyor belts, conveyor systems:
- Smooth starting
- Smooth slowing
- Use of better-value conveyor material

Rotary pumps, piston-type pumps:
- Avoidance of pressure surges
- Extended service life of the piping system

Agitators, mixers:
- Reduced starting current

Fans:
- Less strain on gearing and drive belts

Cooling time

Note
The cooling time must be taken into consideration in the starting frequency.

8.3.2 Installation guidelines

On account of the heat generated, certain installation guidelines must be adhered to when combining 3RW30/31 soft starters with other SIRIUS switching devices.

Stand-alone installation

Stand-alone installation is when minimum vertical **and** lateral clearances between the mounted devices are not violated. This applies both to individual devices and complete load feeders.
The following minimum clearances must be adhered to in stand-alone installation (these minimum clearances depend on the frame size):

Frame size	Minimum clearance on both sides in mm
S00	15
S0	20
S2	30
S3	40

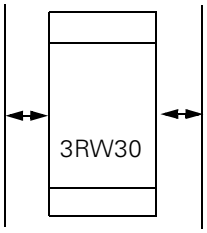

Table 8-5: Stand-alone installation, minimum clearances at the side, 3RW3

Frame size	Vertical clearance a	Vertical clearance b
S00	50	50
S0	60	40
S2	50	30
S3	60	30

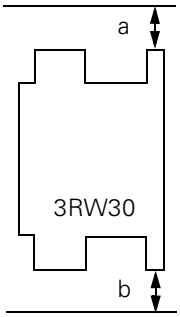

Table 8-6: Stand-alone installation, minimum clearances at the side, 3RW3

Line lengths for the drive circuit

The control inputs for starting and stopping are not rated for longer distances. This means:

- In the case of a drive circuit that goes beyond the control cubicle, coupling relays must be used.
- The control cables in the cubicle should not be laid together with main circuit cables.

When electronic output modules are used in the drive circuit (e.g. Triac outputs at 230 V AC), RC elements (e.g. 3TX7462-3T or similar with C > 100 nF) may be required at the control inputs under certain circumstances.

Correction factors

If the minimum clearances are violated, in a combination of a soft starter with a circuit breaker, fixed correction factors must be used to determine the rated current for the device and the switching frequency.
The following variables can be modified by means of correction factors:

- Rated current for the device
- Switching frequency
- Current setting of the circuit breaker
- Current setting of the overload relay

Correction factor for the rated current of the device

A factor is specified by which the device rated current of the soft starter is reduced.

Example:
Correction factor for the rated current of the device = 0.9
Selected device = 3RW3014-1CB14 (under normal conditions at 40 °C a device rated current of 6 A)
This results in an actual device rated current of:
0.9 x 6 A = 5.4 A

Correction factor for switching frequency

The switching frequency is the maximum permissible number of starts per hour. This value must be adjusted by the specified correction factor. The number of permissible starts per hour is given in Section 8.7.1, "Control electronics/power electronics", in Section 8.7, "Technical specifications".
The specified correction factors refer to the following operating conditions:
S4 operation, 40 °C ambient temperature, 30 % duty cycle

Example:
Correction factor for the switching frequency = 1.5
Selected device = 3RW3014-1CB14 (has a maximum switching frequency of 30 starts per hour under the conditions specified above)
This results in a corrected switching frequency of:
1.5 x 30 = 45 starts per hour

To increase the switching frequency, it is also possible to use a larger device.

Correction factor for the current setting of the circuit breaker

In combinations of a 3RW30 soft starter and a 3RV1 circuit breaker, the set value of the circuit breaker may have to be corrected appropriately. The correction factor specifies the extent of the change.

Example:
Correction for the current setting of the circuit breaker: 1.1
Selected device = 3RW3014-1CB14
The connected motor has a motor rated current of 5 A.
The set value of the circuit breaker must be changed to:
1.1 x 5 A = 5.5 A

Correction factor for the current setting of the overload relay

In combinations of a 3RW30 soft starter + 3RU1 thermal overload relay or 3RW30 software starter + 3RB10 electronic overload relay, the set value of the overload relay must be corrected appropriately. The correction factor specifies the extent of the change.

Example:
Correction factor for the current setting of the overload relay 0.9
Selected device = 3RW3014-1CB14
The connected motor has a motor rated current of 5 A.
The set value of the overload relay now has to be changed to:
0.9 x 5 A = 4.5 A

8.3.3 Overview tables: correction factors

The tables below give the correction factors for the circuit-breaker current setting, the device rated current, and the switching frequency.
The values indicate the difference between use with a fan (accessory) and use without a fan.
All correction fans apply throughout the entire temperature range (i.e. for 40 °C, 50 °C, and 60 °C).
The various tables specify the values in turn for the following:
3RW30/31 soft starters in a stand-alone installation
3RW30/31 soft starter + 3RV1 circuit breaker
3RW30/31 soft starter + 3RT1 contactor + 3RU1 thermal overload relay
3RW30/31 soft starter + 3RT1 contactor + 3RB10 electronic overload relay

8.3.3.1 3RW30/31 soft starters in a stand-alone installation

Minimum clearance

In the case of frame size S00 (3RW301..), the following applies to stand-alone, vertical installation without directly attached switching devices:
In order to maintain the required space above the arc chute, clearance of at least 50 mm must be maintained to grounded parts above and below.

3RW30/31 correction factors

3RW30/31 soft starters not combined with any other switching devices:

			Without fan				With fan	
			Stand-alone installation		Installed side by side		Stand-alone installation or side by side	
			Correction factor		Correction factor		Correction factor	
Order number	Frame size	Device rated current in A at 40 °C	Rated current for the device	Switching frequency	Rated current for the device	Switching frequency	Rated current for the device	Switching frequency
3RW3014-1CB..	S00	6	1	1	1	0.75	- 1)	- 1)
3RW3016-1CB..	S00	9	1	1	1	0.75	- 1)	- 1)
3RW3.24-1AB..	S0	12.5	1	1	1	0.65	1	1.8
3RW3.25-1AB..	S0	16	1	1	1	0.65	1	1.8
3RW3.26-1AB..	S0	25	1	1	1	0.65	1	1.8
3RW3034-1AB..	S2	32	1	1	1	0.65	1	1.8
3RW3035-1AB..	S2	38	1	1	1	0.65	1	1.8
3RW3036-1AB..	S2	45	1	1	1	0.65	1	1.8
3RW3044-1AB..	S3	63	1	1	1	0.8	1	1.6
3RW3045-1AB..	S3	75	1	1	1	0.75	1	1.6
3RW3046-1AB..	S3	100	1	1	1	0.7	1	1.6

Table 8-7: Correction factors, 3RW30/31

1) The SIRIUS 3RW301.. soft starters cannot be operated with a fan.

8.3.3.2 3RW30/31 soft starters in combination with the 3RV1 circuit breaker

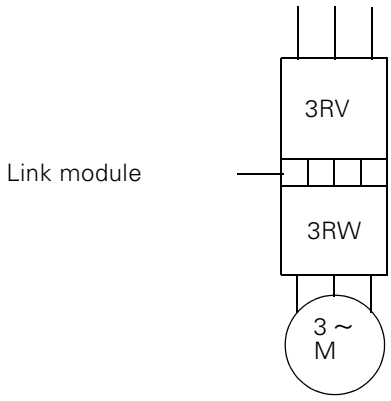

Fig. 8-11: 3RW3 soft starter + 3RV1 circuit breaker

Dimensioning of the circuit breaker

The frame size selected for the circuit breaker should be large enough so that the current value calculated can just be set.
In the event of current values that are lower than can be set for the specified circuit breaker, the next smaller circuit breaker must be used.

Correction factors: 3RV1 + 3RW30/31

Combination of a 3RV1 circuit breaker + 3RW30/31 soft starter:

Order number	Frame size	Device rated current in A at an ambient temperature of 40 °C	Order number Circuit breaker	Adjustment range Circuit breaker	Without fan Stand-alone installation			Without fan Installed side by side			With fan Stand-alone installation			With fan Installed side by side		
					Correction factor Rated current for the device	Correction factor Switching frequency	Correction factor Current setting of the circuit breaker	Correction factor Rated current for the device	Correction factor Switching frequency	Correction factor Current setting of the circuit breaker	Correction factor Rated current for the device	Correction factor Switching frequency	Correction factor Current setting of the circuit breaker	Correction factor Rated current for the device	Correction factor Switching frequency	Correction factor Current setting of the circuit breaker
3RW3014-1CB..	S00	6	3RV1011-1GA10	(4.5 - 6.3) A	1	0.9	1	1	0.5	1.	— 1)	— 1)	— 1)	— 1)	— 1)	— 1)
3RW3016-1CB..	S00	9	3RV1011-1JA10	(7 - 10) A	1	0.9	1	1	0.5	1.	— 1)	— 1)	— 1)	— 1)	— 1)	— 1)
3RW3.24-1AB..	S0	12.	3RV1021-1KA10	(9 - 12.) A	1	0.5	1	1	0.5	1.	1	1.	1	1	1.7	1.1
3RW3.25-1AB..	S0	16	3RV1021-4AA10	(11 - 16) A	1	0.5	1	1	0.5	1.	1	1.	1	1	1.7	1.1
3RW3.26-1AB..	S0	25	3RV1021-4DA10	(20 - 25) A	1	0.75	1	0.	0.5	1.	1	1.	1	1	1.7	1.1
3RW3034-1AB..	S2	32	3RV1031-4EA10	(22 - 32) A	1	0.65	1	0.9	0.45	1.1	1	2.2	1	1	1.9	1.1
3RW3035-1AB..	S2	38	3RV1031-4FA10	(28 - 40) A	1	0.85	1	0.95	0.35	1.1	1	1.8	1	1	1.7	1.1
3RW3036-1AB..	S2	45	3RV1031-4GA10	(36 - 45) A	1	0.85	1	0.9	0.4	1.1	1	1.8	1	1	1.7	1.1
3RW3044-1AB..	S3	63	3RV1041-4JA10	(45 - 63) A	1	0.85	1	0.95	0.6	1.1	1	1.6	1	1	1.3	1.1
3RW3045-1AB..	S3	75	3RV1041-4KA10	(57 - 75) A	1	0.8	1	0.9	0.5	1.1	1	1.6	1	1	1.3	1.1
3RW3046-1AB..	S3	100	3RV1041-4MA10	(80 - 100) A	1	0.75	1	0.85	0.55	1.1	1	1.6	1	1	1.2	1.1

1) = SIRIUS 3RW301 .. soft starters cannot be used with a fan

Table 8-8: Correction factors: 3RV1 circuit breaker + 3RW3 soft starter

8.3.3.3 Combining the 3RT contactor with the 3RU1 thermal overload relay and 3RW3 soft starter

Frame size of the overload relay

The frame size selected for the overload relay should be large enough so that it is just possible to set the current value calculated.
In the event of current values that are lower than can be set for the specified overload relay, the next smaller overload relay must be used.

Important
It is not permissible to mount the thermal overload relay under the contactor/connecting lead/soft starter combination.
The overload relay must be integrated in the feeder before the contractor/connecting lead/soft starter combination. The specified correction factors apply only to this permissible mounting sequence.

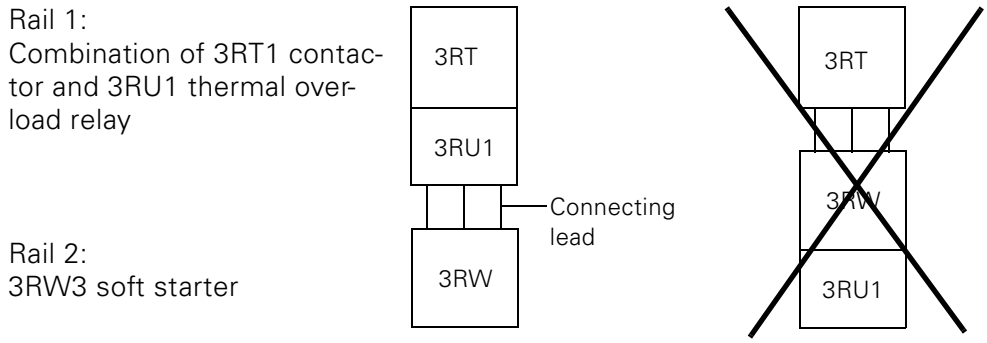

Fig. 8-12: 3RT+3RU1+3RW3 combination

Minimum clearance

For thermal reasons, a minimum clearance is necessary between the contactor/overload relay combination and the soft starter, as is a minimum length of the connecting leads.
The following table specifies the minimum clearances and minimum lengths of the connecting leads for the various frame sizes:

Frame size	Minimum clearance between rail 1 and rail 2 (center to center) in mm	Minimum length of the connecting lead in mm
S00	160	100
S0	200	150
S2	240	200
S3	300	250

Table 8-9: 3RW3 installation guidelines, minimum clearances/lengths

Correction factors: 3RT + 3RU1 + 3RW30/31

Combination of the 3RT1 contactor with an attached 3RU1 thermal overload relay/connecting lead/3RW30/31 soft starter:

			Without fan Stand-alone installation			Without fan Installed side by side			With fan Stand-alone installation			With fan Installed side by side		
Order number	Frame size	Device rated current in A at an ambient temperature of 40 °C	Contactor order number	Order number Therm. overload relay	Setting range of the overload relay	Correction factor Rated current for the device	Correction factor for switching frequency	Correction factor Set value for th. overload relay	Correction factor Rated current for the device	Correction factor for switching frequency	Correction factor Current setting of the circuit breaker	Correction factor Rated current for the device	Correction factor for switching frequency	Correction factor Set value for th. overload relay
3RW3014-1CB..	S00	6	3RT1015-1A..	3RU1116-1GBO	(4.5 - 6.3) A	0.95	1	1	0.9	0.75	1	— 1)	— 1)	— 1)
3RW3016-1CB..	S00	9	3RT1016-1A..	3RU1116-1JBO	(7 - 10) A	0.9	0.95	1	0.8	0.8	1	— 1)	— 1)	— 1)
3RW3.24-1AB..	S0	12.5	3RT1024-1A..	3RU1126-1KBO	(9-12.5)A	0.95	0.9	1	0.9	0.55	1	1	1.7	0.95
3RW3.25-1AB..	S0	16	3RT1025-1A..	3RU1126-4ABO	(11-16)A	0.95	0.9	1	0.9	0.55	1	1	1.7	0.95
3RW3.26-1AB..	S0	25	3RT1026-1A..	3RU1126-4DBO	(22-25)A	0.9	0.8	1	0.8	0.55	1	1	1.7	0.95
3RW3034-1AB..	S2	32	3RT1034-1A..	3RU1136-4EBO	(22-32)A	0.95	0.7	1	0.9	0.45	1	1	1.9	0.92
3RW3035-1AB..	S2	38	3RT1035-1A..	3RU1136-4FBO	(28-40)A	0.95	0.9	1	0.9	0.35	1	1	1.7	0.92
3RW3036-1AB..	S2	45	3RT1036-1A..	3RU1136-4HBO	(36-45)A	0.9	0.95	1	0.8	0.45	1	1	1.7	0.92
3RW3044-1AB..	S3	63	3RT1044-1A..	3RU1146-4JBO	(45-63) A	0.95	0.9	1	0.9	0.65	1	1	1.5	0.92
3RW3045-1AB..	S3	75	3RT1045-1A..	3RU1146-4KBO	(57-75) A	0.95	0.85	1	0.9	0.5	1	1	1.5	0.92
3RW3046-1AB..	S3	100	3RT1046-1A..	3RU1146-1MBO	(80-100) A	0.9	0.8	1	0.8	0.55	1	1	1.5	0.92

1) = SIRIUS 3RW301 .. soft starters cannot be used with a fan.

Table 8-10: Correction factors, 3RT contactor + 3RU therm. overload relay + 3RW soft starter

8.3.3.4 Combining the 3RT contactor with the 3RB10 electronic overload relay and 3RW3 soft starter

The contactor, electronic overload relay, and soft starter can be connected in two ways:

- Combining a 3RT1 contactor with an attached 3RB10 electronic overload relay, a connecting lead, and a 3RW30/31 soft starter
- Combining a 3RT1 contactor with a connecting lead and a combination of a 3RW30/01 soft starter with an attached 3RB10 electronic overload relay

3RT + 3RB10 + connecting lead + 3RW3

Rail 1:
Combination of a 3RT1 contactor and a 3RB10 electronic overload relay

Rail 2:
3RW30/31 soft starter

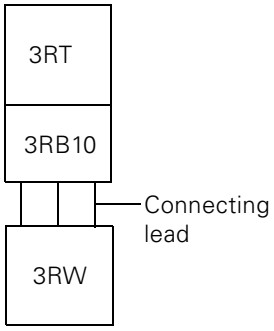

Fig. 8-13: 3RT+3RB10+3RW3 combination

Minimum clearance

For thermal reasons, a minimum clearance is necessary between the contactor/overload relay combination and the soft starter, as is a minimum length of the connecting leads.
The following table specifies the minimum clearances and minimum lengths of the connecting leads for the various frame sizes:

Frame size	Minimum clearance between rail 1 and rail 2 (center to center) in mm	Minimum length of the connecting lead in mm
S00	160	100
S0	200	150
S2	240	200
S3	300	250

Table 8-11: 3RT + 3RB10 + 3RW3 installation guidelines, minimum clearances/minimum lengths

3RT + connecting lead + 3RB10 + 3RW3

Rail 1:
3RT1 contactor

Rail 2:
Combination of 3RW30/31 soft starter and 3RB10 electronic overload relay

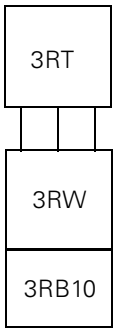

Fig. 8-14: 3RT+3RW3+3RB10 combination

Minimum clearances

Frame size	Minimum clearance between rail 1 and rail 2 (center to center) in mm	Minimum length of the connecting lead in mm
S00	100	100
S0	140	150
S2	180	200
S3	240	250

Table 8-12: 3RT1 + 3RW30/31 + 3RB10 installation guidelines, minimum clearances/minimum lengths

Correction factors: 3RT + 3RB10 + 3RW3

Combining a 3RT1 contactor with an attached 3RB10 electronic overload relay, a connecting lead, and a 3RW30/31 soft starter

	Without fan Stand-alone installation			Without fan Installed side by side			With fan Stand-alone installation			With fan Installed side by side		
	Correction factor Set value of the el. overload relay	Correction factor for switching frequency	Correction factor Rated current for the device	Correction factor Set value of the el. overload relay	Correction factor for switching frequency	Correction factor Rated current for the device	Correction factor Current setting of the circuit breaker	Correction factor for switching frequency	Correction factor Rated current for the device	Correction factor Set value of the el. overload relay	Correction factor for switching frequency	Correction factor Rated current for the device
Setting range of the overload relay												
Order number of electronic overload relay												
Contactor order number												
Device rated current in A at an ambient temperature of 40 °C												
Frame size												
Order number												
3RW3014-1CB..	1	0.95	1	1	?	1	— 1)	— 1)	— 1)	— 1)	— 1)	— 1)
3RW3016-1CB..	1	0.95	1	1	?	1	— 1)	— 1)	— 1)	— 1)	— 1)	— 1)
3RW3.24-1AB..	1	0.85	1	1	0.5	1	1	1.8	1	1	1.7	1
3RW3.25-1AB..	1	0.85	1	1	0.5	1	1	1.8	1	1	1.7	1
3RW3.26-1AB..	1	0.75	1	1	0.45	1	1	1.8	1	1	1.7	1
3RW3034-1AB..	1	0.65	1	1	0.4	1	1	2.2	1	1	1.9	1
3RW3035-1AB..	1	0.85	1	1	0.35	1	1	1.8	1	1	1.7	1
3RW3036-1AB..	1	0.85	1	1	0.35	1	1	1.8	1	1	1.7	1
3RW3044-1AB..	1	0.85	1	1	0.6	1	1	1.6	1	1	1.5	1
3RW3045-1AB..	1	0.8	1	1	0.5	1	1	1.6	1	1	1.5	1
3RW3046-1AB..	1	0.75	1	1	0.55	1	1	1.6	1	1	1.5	1

Order number	Frame size	Device rated current in A at an ambient temperature of 40 °C	Contactor order number	Order number of electronic overload relay	Setting range of the overload relay
3RW3014-1CB..	S00	6	3RT1015-1A..	3RB1016-1SBO	(3-12)A
3RW3016-1CB..	S00	9	3RT1016-1A..	3RB1016-1SBO	(3-12)A
3RW3.24-1AB..	S0	12.5	3RT1024-1A..	3RB1026-1QBO	(6-25)A
3RW3.25-1AB..	S0	16	3RT1025-1A..	3RB1026-1QBO	(6-25)A
3RW3.26-1AB..	S0	25	3RT1026-1A..	3RB1026-1QBO	(6-25)A
3RW3034-1AB..	S2	32	3RT1034-1A..	3RB1036-1UBO	(15-50)A
3RW3035-1AB..	S2	38	3RT1035-1A..	3RB1036-1UBO	(15-50)A
3RW3036-1AB..	S2	45	3RT1036-1A..	3RB1036-1UBO	(15-50)A
3RW3044-1AB..	S3	63	3RT1044-1A..	3RB1046-1EBO	(25-100)A
3RW3045-1AB..	S3	75	3RT1045-1A..	3RB1046-1EBO	(25-100)A
3RW3046-1AB..	S3	100	3RT1046-1A..	3RB1046-1EBO	(25-100)A

1) = SIRIUS 3RW301 .. soft starters cannot be used with a fan.

Table 8-13: Correction factors, 3RT contactor + 3RB10 electronic overload relay + 3RW soft starter

8.3.4 Circuit example

Circuit example with 3RW30 frame size S0, S2, S3 (variant with 110-230 V UC):

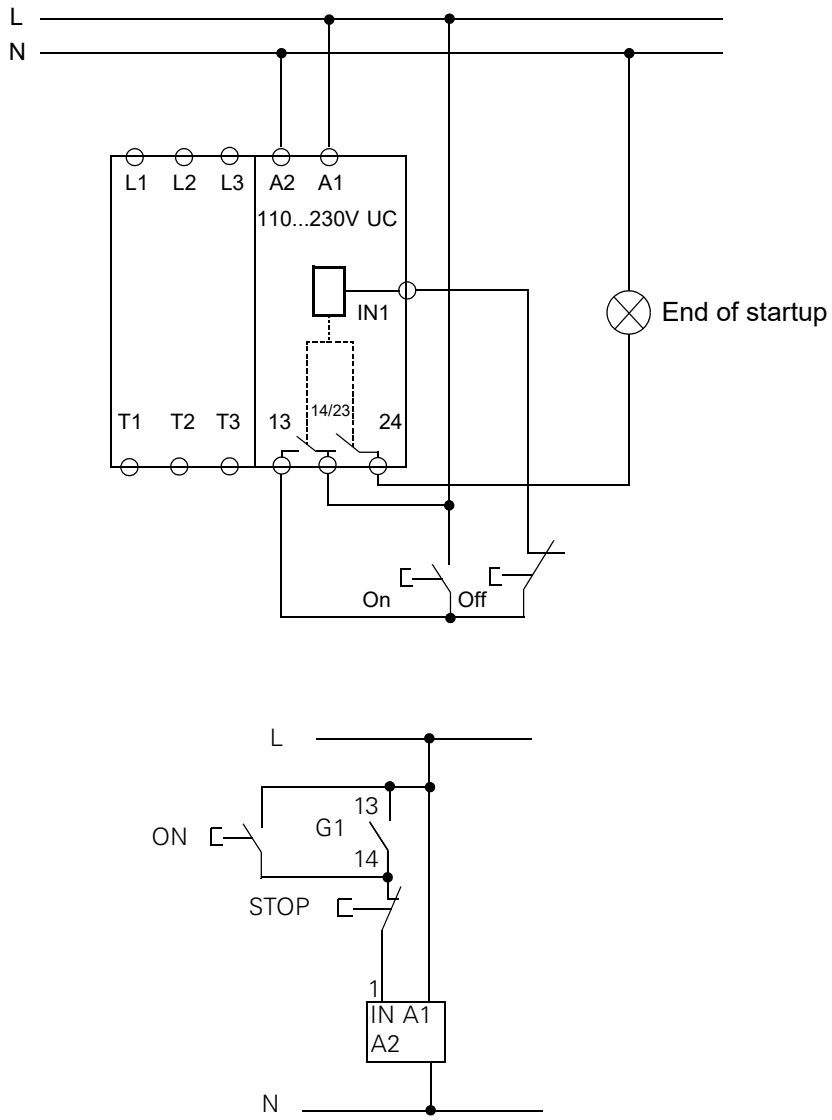

Fig. 8-15: Circuit example, 3RW3

8.3.5 Commissioning

Every SIRIUS 3RW soft starter comes with the following warning, which it is imperative to heed:

Caution
This device has been tested carefully at the factory and found to be in working order.
During transportation, however, it may have been subject to stresses over which we have no control. The bypass relays in the main circuit may be in an undefined state.
In the interests of complete safety, the following procedure should be used at commissioning or after the replacement of the SIRIUS soft starter:

First, apply the supply voltage to A1/A2 in order to put the impulse series relays in a defined switching state.

Then, switch on the main circuit (L1/L2/L3).

If you do not do this, the motor can be switched on inadvertently and cause damage to people or parts of the system.

Settings

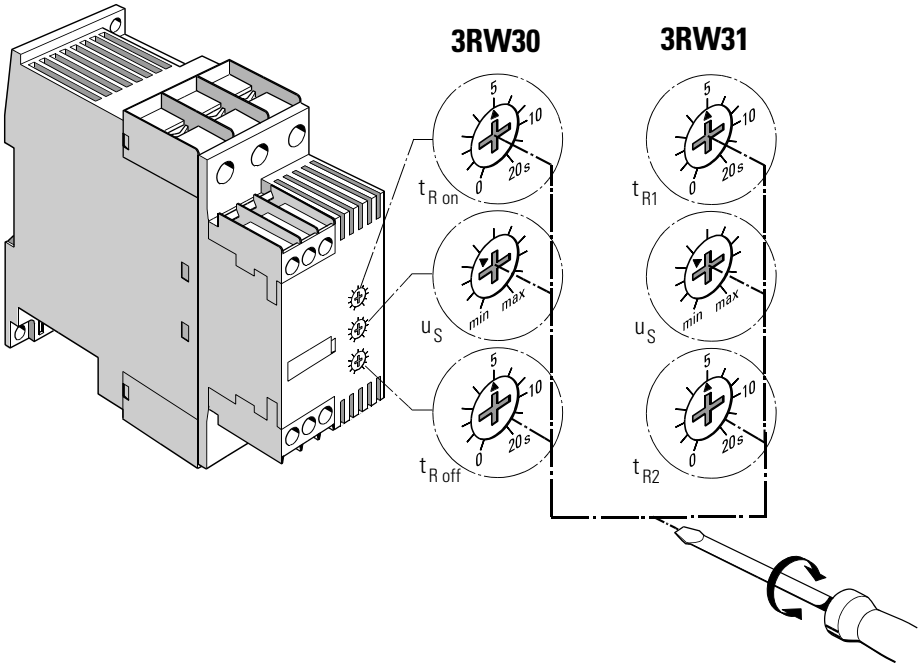

Fig. 8-16: Settings, 3RW3

Note
At commissioning, the settings of the potentiometers for the ramp time and the starting voltage should remain unchanged. These set values must be obtained in a trial.

Changing settings

The potentiometer settings are scanned before each switching operation ("ON" or "OFF").
If, for example, the setting of the potentiometer for starting time is changed while the motor is running up, the change does not come into effect until the next start.

Starting voltage

The starting voltage should be set to a value at which the motor starts rapidly.

Ramp time

The ramp time should be set such that the motor can run up within the time defined in this way.
If the star time for star-delta starting is known, the ramp time can be set to this value.

Coasting-down time

The potentiometer for the coasting-down time is for setting the duration of the voltage ramp for coasting down. This parameter can be used to make the motor run-down longer than it would be if the motor were merely to coast to a stop.
The motor coasts to a stop on its own if this potentiometer is set to a value of 0.

Switching frequency

To prevent thermal overloading of the devices, the maximum permissible switching frequency must be adhered to and the correction factor tables must be used (see the installation guidelines in Section 8.3.2).

Starting time

In order to obtain optimum operating conditions for the 3RW3 soft starter, the setting for the starting time should be approx. 1 second longer than the resultant motor run-up time, in order to ensure that the internal jumpering contacts do not have to carry the starting current. This protects the internal jumpering contacts and increases their service life. Longer starting times increase the thermal load on the devices and the motor unnecessarily and lead to a reduction in the permissible switching frequency.

Position of the terminals

3RW30

The following graphic illustrates the position of the terminals and the potentiometers for adjustment.

Frame size S00
3RW301.

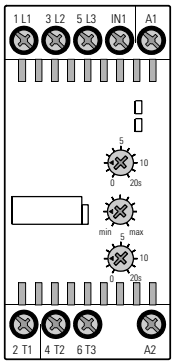

Frame size S0 to S3
3RW302./303./304.

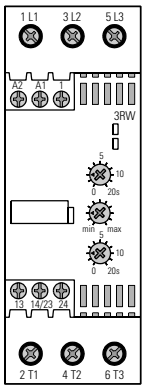

Fig. 8-17: Position of the terminals and the potentiometers for adjustment

3RW31

The 3RW31 soft starters are available in frame size S0. Outwardly, they differ from the 3RW30 in the labeling of the contacts and the terminals:

- There is no BYPASSED auxiliary contact. The free contact is used to enable the necessary drive contact IN2 to switch between the ramp times t_{R1} and t_{R2}.
- The 3RW31 does not have a coasting-down ramp. The potentiometer with which the coasting-down time is adjusted on the 3RW30 is used here to set the second ramp time t_{R2}.
- There is no ON auxiliary contact.

Line length of the control cable

To eliminate problems with the cable coupler capacitances, the control cable should be shorter than 15 m. (This is based on devices with a rated control supply voltage of 24 V UC to 50 m.)
To eliminate problems in control cables that are fed out of the cubicle, coupling links must be used.

8.3.6 Event messages and diagnostics

Event messages

READY LED	Continuous Flashing	Ready for operation while starting up or coasting down
BYPASSED LED	Continuous	Bypassed

Table 8-14: 3RW30/31 event messages

Diagnostics

Malfunction	Possible cause	Remedy
READY LED off	• Supply voltage too low	• Check and adapt the supply voltage at A1, A2
No reaction to control input IN (READY LED on)	• No supply voltage	• Check fuses/line contactor
	• Phase loss	• Check fuses/line contactor • Check voltages at L1 to L3
	• Wrong cable connected to IN	• Connect to IN as shown in the graphic of the terminals
	• No load	• Connect the motor
Start the motor directly (BYPASSED LED on)	• The line voltage is switched off and on in continuous operation without operation of the control input IN	• Always switch the line contactor off and on in conjunction with control input IN

Table 8-15: 3RW30/31 diagnostics

8.3.7 Timing diagram

Starting and coasting-down behavior

The following timing diagram shows the switchover times when the device is switched on/off:

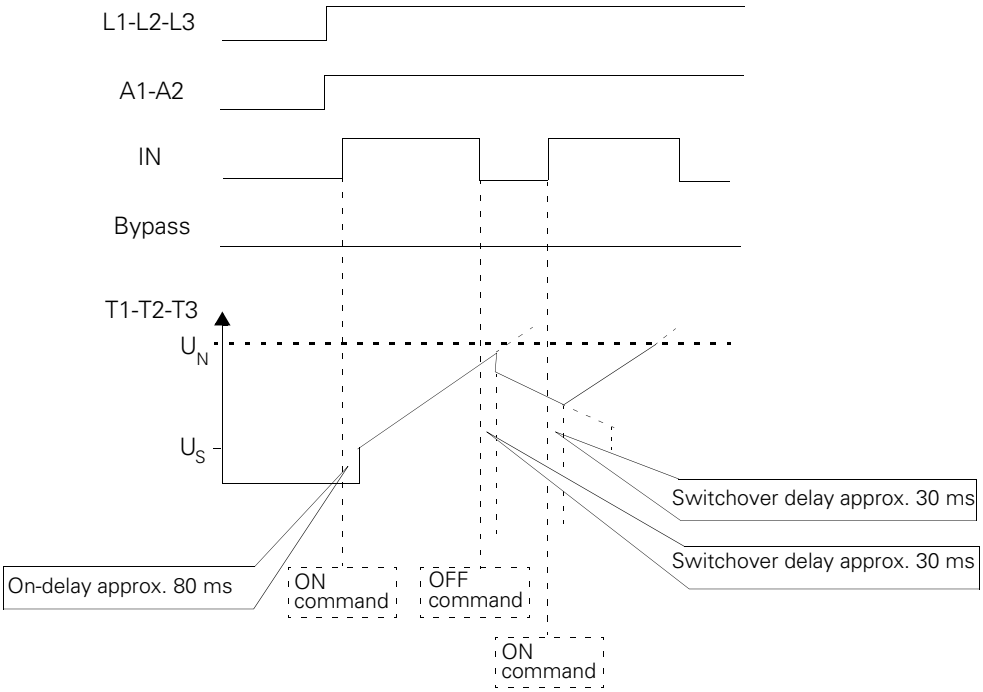

Fig. 8-18: Starting and coasting-down behavior

Supply interruption in bypassed state

If the load voltage is switched off in the bypassed state while the auxiliary supply continues to be applied at terminals A1/A2, the soft starter performs a direct start of the motor after the load voltage is switched on again. To prevent this, the "on" command must be removed in the event of the loss of the main voltage.
The following graphic illustrates what happens when the supply is interrupted in the bypassed state:

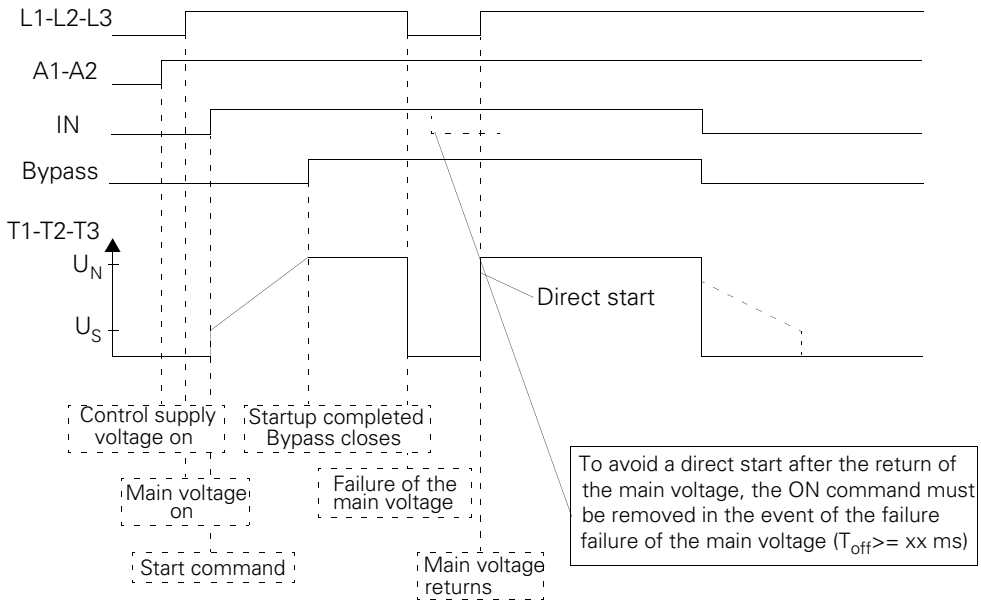

Fig. 8-19: Supply interruption in the bypassed state

8.4 Accessories

The following accessories are available for the 3RW3 soft starters:

Description	Order number
Fan for 3RW3.2..	3RW3926-8A
Fan for 3RW303.. and 3RW304..	3RW3936-8A
Terminal covers for box covers for 3RW303..	3RT1936-4EA2
Terminal covers for box covers for 3RW304..	3RT1946-4EA2
Terminal cover for bar connection for 3RW304..	3RT1946-4EA1
Link modules for combination with 3RV1 circuit breaker	3RA19.1-1A (frame sizes S00 to S3)
RC element for control from PLC	3TX7462-3T

Table 8-16: Accessories, 3RW30/31

Control of the fan

The fan is controlled by the control electronics of the soft starter.
It runs at the following times:

- When the fan is switched on: approx. 0.5 seconds after the bypass contacts close (end-of-startup signal)
- When the fan is switched off: approx. 0.5 hours after the soft starter is switched off

Attachment of the fan

The fan is snapped into the recess provided on the underside of the soft starter, and the plug-in cable is inserted in the corresponding connector. The direction of installation is indicated on the fan by an arrow.
Additional parameter assignment is not necessary.
These fan modules mean that the starter can be installed in any position. The only exception to this is when the fan cannot blow against the convection downward from above.

Attachment of the fan

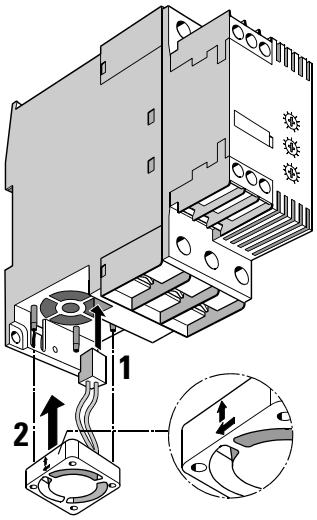

Fig. 8-20: Accessories: attachment of the fan

Terminal covers

To provide additional finger protection, for frame sizes S2 and S3 the terminal covers of the 3RT1 contactors of the same frame sizes can be used. Installation on the soft starter is analogous to that on the contactors.

Link modules

The same link modules are available for building fuseless feeders (soft starter + 3RV circuit breaker) as are used for the 3RT contactor + 3RV circuit breaker combinations.
Refer to the information and assignment tables in Section 8.3.2, "Installation guidelines".

RC element

If the 3RW30/31 soft starter is to be controlled from a PLC with a Triac or thyristor output, malfunctioning can be avoided with an RC element. If there is leakage current of more than 1 mA, without an RC element the soft starter may interpret the drop in voltage that occurs at the input as an "ON" command.

Connection example for an RC element

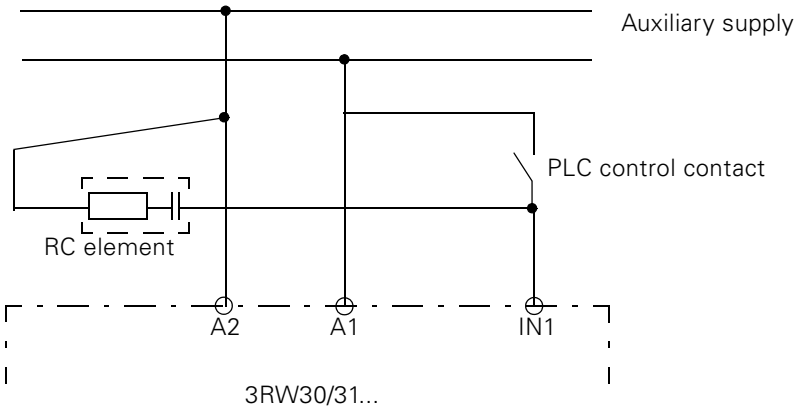

Fig. 8-21: Connection example with an RC element

8.5 Mounting and connection

8.5.1 Mounting

Snap-on attachment

The 3RW30 soft starters are snapped onto 35 mm rails in acc. with EN 50 022 without a tool.
The starter is placed on the upper edge of the rail and pressed downward until it snaps onto the lower edge of the rail.
Frame sizes S00 and S0 can be removed just as easily: The starters are pressed downward so that the tension of the attachment springs is loosened, and the starters can be removed.
In the case of frame sizes S2 and S3, these attachment springs are released by a lug on the underside of the starter that can be moved using a screw-driver.

8.5.2 Connection

Screw-type terminals

The 3RW3 electronic soft starters are available with the SIGUT terminal system and plus-minus POZIDRIV 2 screws.

Conductor cross-sections

The following table shows the permissible conductor cross-sections for the 3RW30 electronic soft starters:

	3RW301. L1 L2 L3 A1/A2; NO/NC	**3RW302. 3RW312. L1 L2 L3**		**3RW303. L1 L2 L3**		**3RW304.. L1 L2 L3**
∅ 5 ... 6 mm / PZ2	0.8 to 1.2 Nm 7 to 10.3 lb.in	2 to 2.5 Nm 18 to 22 lb.in	∅ 5 ... 6 mm / PZ2	3 to 4.5 Nm 27 to 40 lb.in	min 22 4	4 to 6 Nm 35 to 53 lb.in
10	2 x (0.5 to 1.5 mm²) 2 x (0.75 to 2.5 mm²)	2 x (1 to 2.5 mm²) 2 x (2.5 to 6 mm²)	13	2 x (0.75 to 16 mm²)	17	2 x (2.5 to 16 mm²)
10	2 x (0.5 to 2.5 mm²)	2 x (1 to 2.5 mm²) 2 x (2.5 to 6 mm²)	13	2 x (0.75 to 16 mm²) 1 x (0.75 to 25 mm²)	17	2 x (2.5 to 35 mm²) 1 x (2.5 to 50 mm²)
—	—	—	13	2 x (0.75 to 25 mm²) 1 x (0.75 to 35 mm²)	17	2 x (10 to 50 mm²) 1 x (10 to 70 mm²)
AWG	2 x (18 to 14)	2 x (14 to 10)	**AWG**	2 x (18 to 3) 1 x (18 to 2)	**AWG**	2 x (10 to 1/0) 1 x (10 to 2/0)

Table 8-17: Conductor cross-sections, 3RW30/31

8.5.3 Circuit diagrams

There are two ways to connect up the 3RW3 soft starter:

- Control by button and locking of the ON button via the "ON" auxiliary contact of the 3RW3
- Control by switch

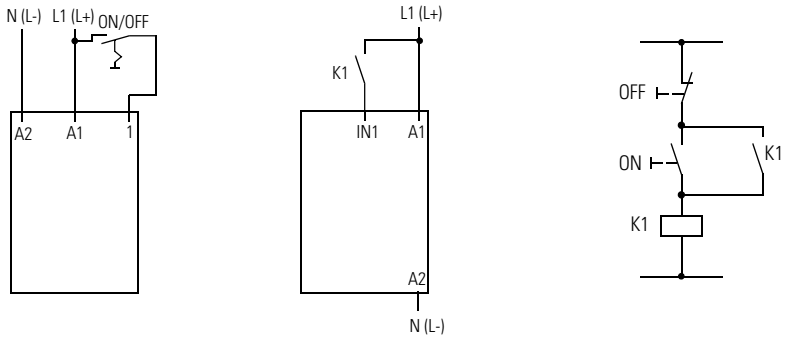

Fig. 8-22: Circuit diagrams, 3RW3

3RW30

3RW302.
3RW303./3RW304

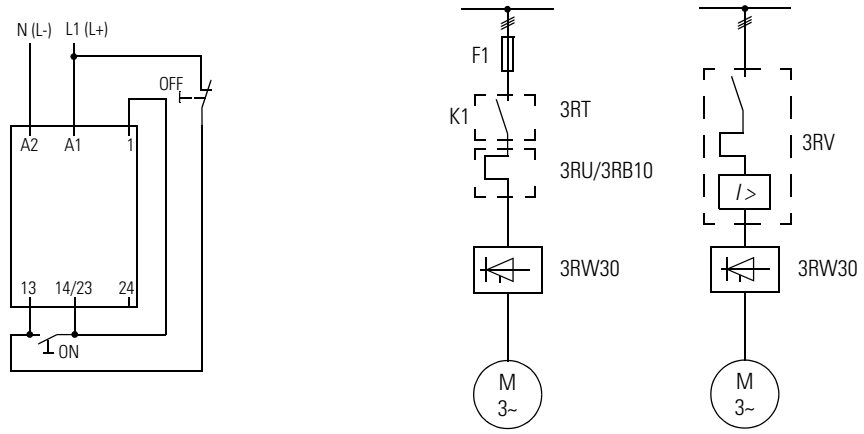

Fig. 8-23: Circuit diagrams, 3RW30

3RW31

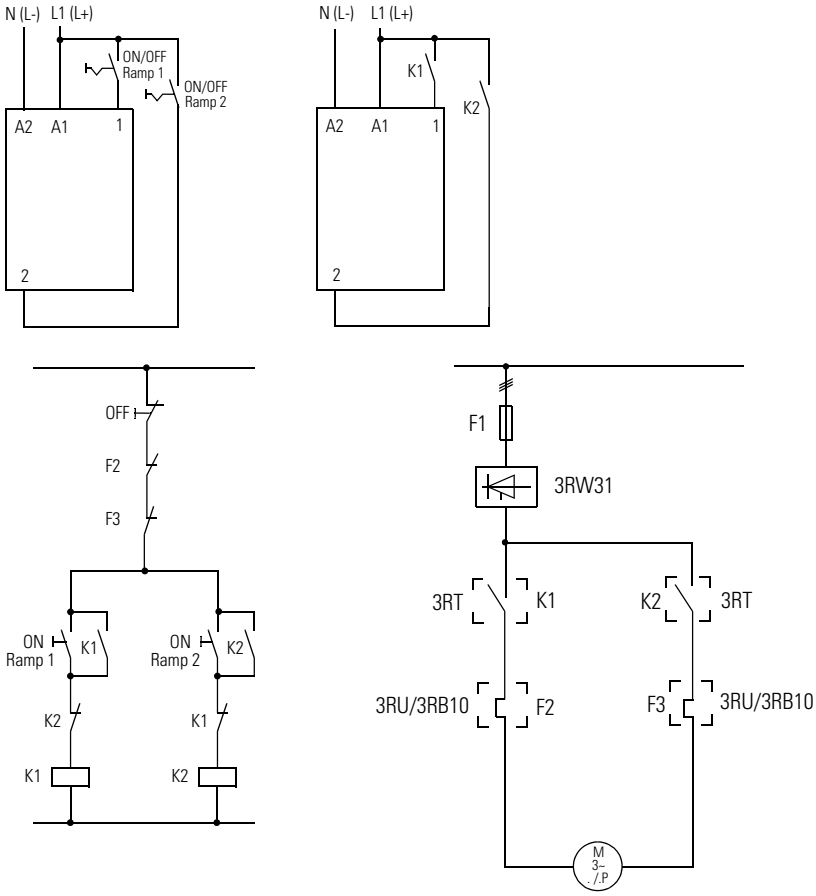

Fig. 8-24: Circuit diagrams, 3RW31

Automatic operation

Direct starting of the soft starter is possible as long as the auxiliary supply is applied at terminals A1 and A2. To this end, a jumper is required between the auxiliary supply contact A1 and the control contact IN.
The following must be taken into consideration:

- An on delay of up to 4 seconds can occur, depending on the frame size.
- Soft coasting down is no longer possible after the auxiliary supply is switched off.

Control via PLC

The 3RW3 soft starter can be controlled by means of a programmable controller (PLC). It is connected up in the same way as for control via switch.

Important
Always ensure that A1 and A2 are connected up correctly. Although polarity reversal cannot damage the device, it can lead to malfunctioning.

Control of a motor with an electromechanical brake

An electromechanical brake with infeed from the main voltage (L1/L2/L3) should not be connected directly to the output of the soft starter. An electromechanical brake should be controlled by means of a separate contactor (K1 in the circuit diagram below):

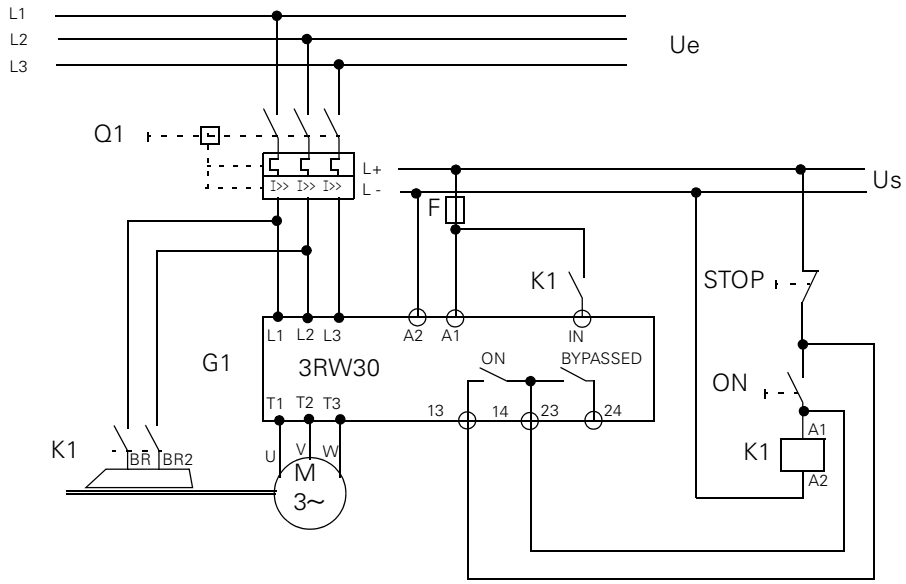

Fig. 8-25: Motor control with an electromechanical brake

8.6 Dimensional drawings (dimensions in mm)

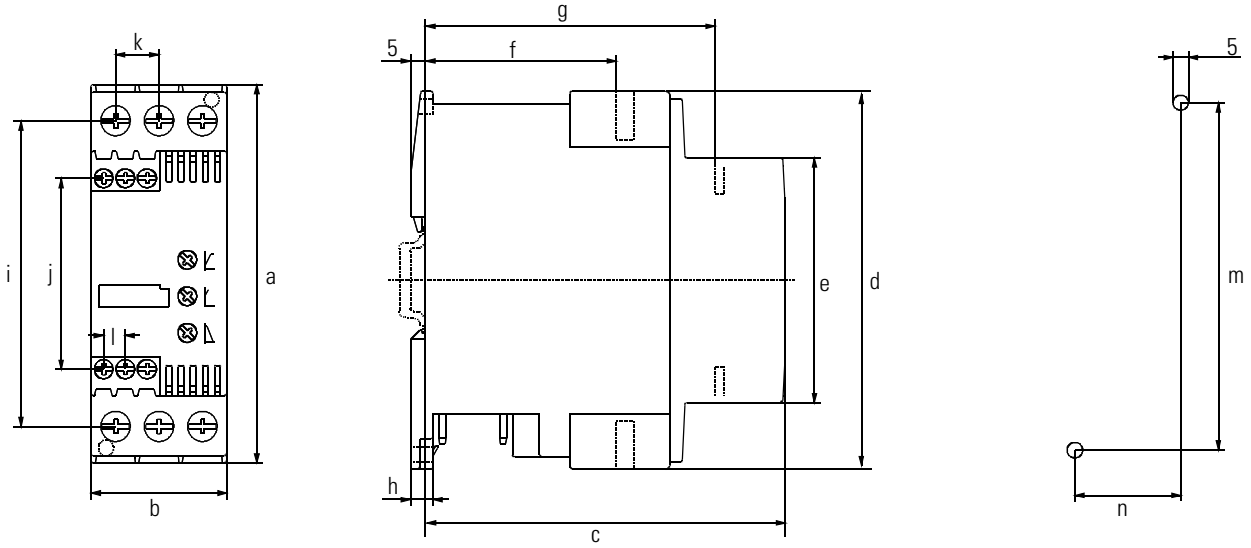

mm	a	b	c	d	e	f	g	h	i	j	k	l	m	n
3RW301.	97.5	45	93	95	66	51	—	7.5	76	—	86	—	90	35
3RW302./3RW312.	125	45	119	125	81	63	96	7	101	63	14	7	115	35
3RW303.	160	55	143	141	95	63	115	8	119	77	18	7	150	30
3RW304.	170	70	183	162	108	87	156	8	132	87	22.5	7	160	60

8.7 Technical specifications

8.7.1 Control electronics/power electronics

Control electronics

Type			**3RW3. ..-1.B0.**	**3RW3. ..-1.B1.**
Rated control supply voltage		V	24 UC	110 to 230 UC
Rated control supply current		mA	Approx. 50	Approx. 25 to 20
Rated frequency at AC		Hz	50/60 ± 10 %	

Power electronics

Type			**3RW3. ..-1.B.4**	**3RW3. ..-1.B.5**	**3RW30 ..-1AA12**
Voltage operating range		V	200 AC to 460 AC, three-phase (± 10 %)	460 AC to 575 AC, three phase (± 10 % - 15 %)	115 AC to 240 AC, single-phase (±10 %)
Rated frequency		Hz	50/60 ± 10 %		
Permissible site altitude	Reduction of I_E • Up to 1000 m above sea level • Up to 2000 m above sea level • Up to 3000 m above sea level • Up to 4000 m ab. sea level[1])		 100 % 92 % 85 % 78 %		
Installation position	Without additional fan With additional fan [3])		The soft starters are designed for operation when mounted in a vertical position. Any installation position (except vertical rotated by 180 °)		

Type			**3RW30 1.**	**3RW3. 2.**	**3RW30 3.**	**3RW30 4.**
Frame size			**S00**	**S0**	**S2**	**S3**
Continuous operation (% of I_e)		%	100			
Minimum load[2]) (% of I_e); At 40 °C		%	4			
Permissible ambient temperature		°C	–25 to +60 (derating as of 40 °C, see below)			
Switching capacity of the auxiliary contacts	230 V/AC-15 230 V/DC-13 24 V/DC-13	A A A	[4]) [4]) [4])	3 0.1 1	3 0.1 1	3 0.1 1

Type			**3RW30 14**	**3RW30 16**	**3RW30 24**	**3RW30 25**	**3RW30 26**
Current-carrying capacity							
Rated operational current I_e in acc. with IEC	At 40/50/60 °C, AC-53b	A	6/5/4	9/8/7	12.5/11/9	16/14/12	25/21/18
Rated operational current I_e in acc. with UL/CSA	At 40/50/60 °C, AC-53b	A	4.8/4.8/4	7.8/7.8/7	11/11/9	17.5/14/12	25/21/18
Power loss at continuous rated operational current (40 °C) approx.		W	5	7	7	9	13
Power loss when the max. switching frequency is exploited		W	5	6	7	8	9
Permissible starts per hour without the use of a fan							
Given intermittent duty S4, T_u = 40 °C		1/h	60	40	30		12
Duty cycle = 30%; stand-alone installation		%	250 x I_e, 2 s		300 x I_e, 2 s		
Permissible starts per hour with the use of a fan							
Given intermittent duty S4, T_u = 40 °C		1/h	—[3])		54		21
Duty cycle = 30%; stand-alone installation							
Idle time after continuous operation		s	0				200
With I_e before a new start							
Degree of protection	In acc. with IEC 60 529		IP20 (terminal housing IP00)				

Conductor cross-sections							
Screw-type terminals	**Auxiliary conductors:**						
(1 or 2 conductors connectable)	• Single-core	mm^2	2 x (0.5 to 1.5); 2 x (0.75 to 2.5) in acc. with IEC 60 947; max. 2 x (0.75 to 4)				
for standard screwdrivers	• Finely stranded with wire end ferrule	mm^2	2 x (0.5 to 1.5); 2 x (0.75 to 2.5)				
size 2 and Pozidriv 2	• AWG cables, single- or multi-core	AWG	2 x (18 to 14)				
	- Terminal screws		M 3, PZ2				
	- Tightening torque	Nm lb.in	0.8 to 1.0 7.1 to 8.9		0.8 to 1.0 7.1 to 8.9		
	Main conductors:						
	• Single-core	mm^2	2 x (0.5 to 1.5); 2 x (0.75 to 2.5)		2 x (1 to 2.5) 2 x (2.5 to 6)		
	• Finely stranded with wire end ferrule	mm^2	2 x (0.5 to 2.5)		2 x (1 to 2.5) 2 x (2.5 to 6)		
	• Multi-core	mm^2	—		—		
Type			**3RW30 14**	**3RW30 16**	**3RW30 24**	**3RW30 25**	**3RW30 26**
	• AWG cables, single- or multi-core	AWG	2 x (18 to 14)		2 x (14 to 10)		
	- Terminal screws		M 3, PZ2		M 4, PZ2		
	- Tightening torque	Nm lb.in	0.8 to 1.2 7 to 10.3		2 to 2.2 18 to 22		

1) Over 4000 m on request

2) The rated current for the motor (specified on the motor's type plate) should amount at least to the specified percentage of the SIRIUS soft starter's device rated current I_e.

3) In the case of frame size S00, it is not possible to install the fan provided as an accessory.

4) Frame size S00 does not have any auxiliary contacts.

Power electronics								
Type			**3RW30 34**	**3RW30 35**	**3RW30 36**	**3RW30 44**	**3RW30 45**	**3RW30 46**
Current-carrying capacity								
Rated operational current I_e in acc. with IEC	At 40/50/60 °C, AC-53b	A	32/27/23	38/32/27	45/38/32	63/54/46	75/64/54	100/85/72
Rated operational current I_e in acc. with UL/CSA	At 40/50/60 °C, AC-53b	A	27/27/23	34/32/27	42/38/32	62/54/46	68/64/54	99/85/72
Power loss at continuous rated operational current (40 °C) approx.		W	10	13	17	13	16	26
Permissible starts per hour								
Given interm. duty S4, T_u = 40 °C		1/h	20	15	5	20	30	15
Duty cycle = 30 %		%	300 x I_e, 3 s			300 x I_e, 4s		
Permissible starts per hour with the use of a fan								
Given interm. duty S4, T_u = 40 °C		1/h	44	27	9	32	48	24
Duty cycle = 30 %; stand-alone installation								
Idle time after cont. operation		s	0		400	0		
with I_e before a new start								
Degree of protection	In acc. with IEC 60 529		IP20 (terminal housing IP00)			IP20[1])		

Conductor cross-sections				
Screw-type terminals	**Auxiliary conductors:**			
(1 or 2 conductors connectable)	• Single-core	mm^2	2 x (0.5 to 1.5); 2 x (0.75 to 2.5) in acc. with IEC 60 947; max. 2 x (0.75 to 4)	
for standard screwdrivers	• Finely stranded with wire end ferrule	mm^2	2 x (0.5 to 1.5); 2 x (0.75 to 2.5)	
size 2 and Pozidriv 2	• AWG cables, single- or multi-core	AWG	2 x (18 to 14)	
	- Terminal screws		M 3	
	- Tightening torque	Nm lb.in	0.8 to 1.0 7.1 to 8.9	
	Main conductors:			
	• Single-core	mm^2	2 x (0.75 to 16)	
	• Finely stranded with wire end ferrule	mm^2	2 x (0.75 to 16) 1 x (0.75 to 25)	
	• Multi-core	mm^2	2 x (0.75 to 25) 1 x (0.75 to 35)	2 x (10 to 50) 1 x (10 to 70)
	• AWG cables, single- or multi-core	AWG	2 x (18 to 3) 1 x (18 to 2)	2 x (10 to 1/0) 1 x (10 to 2/0)
	- Terminal screws		M 6, box terminal, PZ2	M6 (Allan screw)
	- Tightening torque	Nm lb.in	3 to 4.5 27 to 40	4 to 6 35 to 53

General specifications		
	Standard	**Parameters**
EMC noise immunity		
Electrostatic discharge (ESD)	IEC 1000-4-2,	Severity 3: 6/8 kV
El. magn. RF fields	IEC 1000-4-3	Frequency range: 80 to 1000 MHz with 80 % at 1 kHz Severity 3, 10 V/m
Conducted RF disturbance	IEC 61000-4-6 EN 60 947-4-2 SN-IACS	Frequency range: 80 MHz to 1000 MHz with 80 % at 1 kHz 10 V at 0.15 MHz to 80 MHz 3 V at 10 kHz to 80 MHz
Burst	IEC 1000-4-4	Severity 3: 1/2 kV
Surge	IEC 1000-4-5	Severity 3: 1/2 kV
EMC emitted interference		
EMC radio interference intensity	CISPR 11/09.1990	Limit value of class B at 30 MHz to 1000 MHz
Radio interference voltage	CISPR 11/09.1990 EN 60 947-4-2	(0.15 MHz to 30 MHz): device class A (industry)

[1]) IP20 only with attached box terminal (delivery state). Without box terminal IP00.

[2]) Device class B (public power supply networks) is complied with only in the case of variants 3RW3.-1AB0. with control supply voltage UC of 24 V. For the 3RW3.-1A.1. variants with a control supply voltage UC of 110 V to 230 V, single-stage filters (e.g. type B84143-A...) must be connected upstream.

8.7.2 Short-circuit protection and fuse coordination

IEC 60947-4-1/DIN VDE 0660 Part 102 draws a distinction between two coordination types, known as coordination type 1 and coordination type 2. In both coordination types, the short circuit to be dealt with is reliably disconnected. The differences lie only in the degree to which the device is damaged after a short circuit.

Coordination type 1

The motor feeder can be operable after each short-circuit disconnection. Damage to the soft starter is possible. The circuit breaker itself always attains coordination type 1.

Coordination type 2

After a short-circuit event there must be no damage to the soft starter or any other switching device; only the backup fuse may be destroyed. The actual motor feeder can be put into operation again immediately once the short circuit fuse has been replaced.

Maximum short-circuit current

All the specified fuse configurations are designed for a maximum short-circuit current of 50 kA. This ensures that short circuits of 50 kA can be disconnected without posing a threat to persons or the system.

Motor feeder: coordination type 1

Note on configuration:
A fuseless configuration is recommended for motor feeders (i.e. the combination of a 3RV circuit breakers and a 3RW30 soft starter). Coordination type 1 is thus attained.

Motor feeder: coordination type 2

To set up a motor feeder of coordination type 2, the feeder must be fused (i.e. the motor must be provided with overload protection).
The following can be used:

- The 3NE1 all-range fuse, which unifies line protection and semiconductor protection
- The 3NE8 semiconductor protection fuse, in which case additional protection must be provided for the line

Comparison of coordination types 1 and 2

The configuration variant on the basis of coordination type 2 is associated with higher costs than that of coordination type 1, which is why the fuseless configuration (coordination type 1) is recommended. The advantages are:

- Fewer components in the cubicle
- Less effort required for wiring
- Less cubicle space required
- Lower price

Fuse configurations with SITOR 3NE1..-0

The following table specifies the fuse configuration (coordination type 2) for 3RW30/31 with SITOR fuses 3NE1..-0 (short-circuit and line protection); max. short-circuit current 50 kA:

Order number of the soft starter	Order number of the fuse	Rated current of the fuse	Frame size of the fuse
MLFB	MLFB	A	
3RW30 14	3NE1814-0[1)]	20	000
3RW30 16	3NE1815-0[1)]	25	000
3RW30 24/3RW31 24	3NE1815-0[2)]	25	000
3RW30 25/3RW31 25	3NE1815-0[2)]	25	000
3RW30 26/3RW31 26	3NE1802-0[2)]	40	000
3RW30 34	3NE1818-0[2)]	63	000
3RW30 35	3NE1820-0[2)]	80	000
3RW30 36	3NE1820-0[2)]	80	000
3RW30 44	3NE1820-0[2)]	80	000
3RW30 45	3NE1021-0[2)]	100	00
3RW30 46	— [3)]	—	—

Table 8-18: Fuse configurations (SITOR)

1) Fuse coordination for max. 400 V
2) Fuse coordination for max. 500 V
3) Fuse coordination with all-range fuses not possible; pure semiconductor protection fuses plus circuit breakers can be used instead (see following table)

Fuse configurations with SITOR 3NE8

The following table specifies the fuse configuration (coordination type 2) for 3RW30/31 with SITOR fuses 3NE8 (semiconductor protection is provided by the fuse; line protection and overload protection are provided by the circuit breaker); max. short-circuit current 50 kA/400 V:

Order number of the soft starter	Order number of the fuse	Rated current of the fuse	Frame size of the fuse	Order number of the circuit breaker[2)]	Link module 3RW - 3RV
MLFB	MLFB	A	Size	MLFB	MLFB[3)]
3RW30 14	3NE80 03	35	00	3RV10 11	3RA19 11-1A
3RW30 16	3NE80 03	35	00	3RV10 11	3RA19 11-1A
3RW30 24/ 3RW31 24	3NE80 03	35	00	3RV10 21	3RA19 21-1A
3RW30 25/ 3RW31 25	3NE80 03	35	00	3RV10 21	3RA19 21-1A
3RW30 26/ 3RW31 26	—[1)]	—	—	—	—
3RW30 34	3NE80 22	125	00	3RV10 31	3RA19 31-1A
3RW30 35	3NE80 24	160	00	3RV10 31	3RA19 31-1A
3RW30 36	3NE80 24	160	00	3RV10 31	3RA19 31-1A
3RW30 44	3NE80 24	160	00	3RV10 41	3RA19 41-1A
3RW30 45	3NE80 24	160	00	3RV10 41	3RA19 41-1A
3RW30 46	3NE80 24	160	00	3RV10 41	3RA19 41-1A

Table 8-19: Fuse configurations (SITOR)

1) Coordination with pure semiconductor protection fuses is not possible; all-range fuses 3NE1..-0 can be used (see the table above)
2) The selection and setting of the circuit breaker is based on the rated current for the motor
3) Note the unit of quantity

If the motor is to be configured to meet UL requirements, the order number of the fuse must be specified (3NE80..-1).

Fuseless configuration

The following table specifies the components of the fuseless configuration (coordination type 1) for 3RW30/31; short-circuit current of 50 kA/400 V:

Order number of the soft starter	Order number of the circuit breaker[1)]	Link module
MLFB	MLFB	MLFB[3)]
3RW30 14	3RV10 11[2)]	3RA19 11-1A
3RW30 16	3RV10 11[2)]	3RA19 11-1A
3RW30 24/3RW31 24	3RV10 21	3RA19 21-1A
3RW30 25/3RW31 25	3RV10 21	3RA19 21-1A
3RW30 26/3RW31 26	3RV10 21	3RA19 21-1A
3RW30 34	3RV10 31	3RA19 31-1A
3RW30 35	3RV10 31	3RA19 31-1A
3RW30 36	3RV10 31	3RA19 31-1A
3RW30 44	3RV10 41	3RA19 41-1A
3RW30 45	3RV10 41	3RA19 41-1A
3RW30 46	3RV10 41	3RA19 41-1A

Table 8-20: Motor feeder: fuseless configuration

1) The selection and setting of the circuit breaker is based on the rated current for the motor
2) 50 mm clearance is required above and below between the 3RW and grounded parts
3) Note the unit of quantity

Fused configuration

The following table specifies the components of the fused configuration (coordination type 1) for 3RW30/31; short-circuit current of 50 kA/400 V:

Order number of the soft starter	Order number of the fuse	Fuse rated current/ frame size	Order number of the therm. overload relay[1)]	Order number of the elec-tron. over-load relay[1)]	Order number of the contactor
MLFB	MLFB	A / size	MLFB	MLFB	MLFB
3RW30 14	3NA38 10	25 / 00	3RU11 16[2)4)]	3RB10 16[2)4)]	3RT10 15
3RW30 16	3NA38 10	25 / 00	3RU11 16[2)4)]	3RB10 16[2)4)]	3RT10 16
3RW30 24/ 3RW31 24	3NA38 22	63 / 00	3RU11 26[3)]	3RB10 26[3)]	3RT10 24
3RW30 25/ 3RW31 25	3NA38 22	63 / 00	3RU11 26[3)]	3RB10 26[3)]	3RT10 25
3RW30 26/ 3RW31 26	3NA38 24	80 / 00	3RU11 26[3)]	3RB10 26[3)]	3RT10 26
3RW30 34	3NA38 30	100 / 00	3RU11 36[3)]		3RT10 34
3RW30 35	3NA38 30	100 / 00	3RU11 36[3)]		3RT10 35
3RW30 36	3NA38 30	100 / 00	3RU11 36[3)]		3RT10 36
3RW30 44	3NA31 44	250 / 1	3RU11 46[3)]		3RT10 44
3RW30 45	3NA31 44	250 / 1	3RU11 46[3)]		3RT10 45
3RW30 46	3NA31 44	250 / 1	3RU11 46[3)]		3RT10 46

Table 8-21: Motor feeder: fused configuration

1) The selection and setting of the overload relay is based on the rated current for the motor
2) Short-circuit current of 50 kA to max. 400 V
3) Short-circuit current of 50 kA to max. 500 V
4) 50 mm clearance is required above and below between the 3RW and grounded parts

8.7.3 Site altitude

If the site altitude is above 1000 m, the following are necessary:

- A reduction in the rated current for thermal reasons
- A reduction in the rated voltage on account of the diminished dielectric strength

Reductions as a function of site altitude

The diagram below plots the reductions in rated current and rated operating voltage as a function of site altitude:

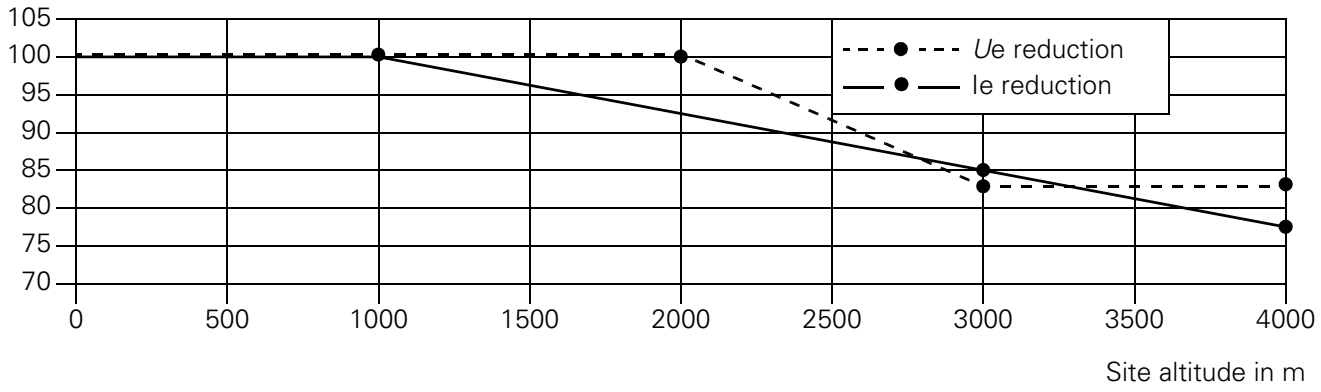

Fig. 8-26: Reductions as a function of site altitude

8.7.4 Specifications in acc. with IEC

The specified motor ratings are guide values.
The soft starter must be selected on the basis of the rated current I_e.
The motor ratings are based on the values specified in DIN 42 973 (kW) and NEC 96 / UL 508 (hp).

Ambient temperature = 40 °C

230 V	400 V	I_e	Order number	500 V	I_e	Order number
Pe in kW	**Pe in kW**	**In A**	**MLFB**	**Pe in kW**	**In A**	**MLFB**
1.5	3	6	3RW30 14-1CB.4	—	—	—
2.2	4	9	3RW30 16-1CB.4	—	—	—
3	5.5	12.5	3RW30 24-1AB.4	7.5	12.5	3RW30 24-1AB.5
4	7.5	16	3RW30 25-1AB.4	7.5	16	3RW30 25-1AB.5
5.5	11	25	3RW30 26-1AB.4	15	25	3RW30 26-1AB.5
7.5	15	32	3RW30 34-1AB.4	18.5	32	3RW30 34-1AB.5
11	18.5	38	3RW30 35-1AB.4	22	38	3RW30 35-1AB.5
11	22	45	3RW30 36-1AB.4	30	45	3RW30 36-1AB.5
19	30	63	3RW30 44-1AB.4	37	63	3RW30 44-1AB.5
22	37	75	3RW30 45-1AB.4	45	75	3RW30 45-1AB.5
30	55	100	3RW30 46-1AB.4	70	100	3RW30 46-1AB.5

Table 8-22: 3RW3 motor ratings in acc. with IEC at 40 °C

Ambient temperature = 50 °C

230 V	400V	I_e	Order number	500 V	I_e	Order number
Pe in kW	**Pe in kW**	**In A**	**MLFB**	**Pe in kW**	**In A**	**MLFB**
1.1	2.2	5	3RW30 14-1CB.4	—	—	—
1.5	4	8	3RW30 16-1CB.4	—	—	—
3	5.5	11	3RW30 24-1AB.4	5.5	11	3RW30 24-1AB.5
4	5-5	14	3RW30 25-1AB.4	7.5	14	3RW30 25-1AB.5
5.5	11	21	3RW30 26-1AB.4	11	21	3RW30 26-1AB.5
7.5	11	27	3RW30 34-1AB.4	15	27	3RW30 34-1AB.5
7.5	15	32	3RW30 35-1AB.4	18.5	32	3RW30 35-1AB.5
11	18.5	38	3RW30 36-1AB.4	22	38	3RW30 36-1AB.5
15	22	54	3RW30 44-1AB.4	30	54	3RW30 44-1AB.5
18.5	30	64	3RW30 45-1AB.4	37	64	3RW30 45-1AB.5
22	45	85	3RW30 46-1AB-4	55	85	3RW30 46-1AB.5

Table 8-23: 3RW3 motor ratings in acc. with IEC at 50 °C

Ambient temperature = 60 °C

230 V	400 V	I_e	Order number	500 V	I_e	Order number
Pe in kW	**Pe in kW**	**In A**	**MLFB**	**Pe in kW**	**In A**	**MLFB**
0.75	1.5	4	3RW30 14-1CB.4	—	—	—
1.5	3	7	3RW30 16-1CB.4	—	—	—
2.2	4	9	3RW30 24-1AB.4	5.5	9	3RW30 24-1AB.5
3	5.5	12	3RW30 25-1AB.4	7.5	12	3RW30 25-1AB.5
4	7.5	18	3RW30 26-1AB.4	11	18	3RW30 26-1AB.5
5.5	11	23	3RW30 34-1AB.4	15	23	3RW30 34-1AB.5
7.5	11	27	3RW30 35-1AB.4	15	27	3RW30 35-1AB.5
7.5	15	32	3RW30 36-1AB.4	18.45	32	3RW30 36-1AB.5
11	22	46	3RW30 44-1AB.4	30	46	3RW30 44-1AB.5
15	22	54	3RW30 45-1AB.4	30	54	3RW30 45-1AB.5
18.5	37	72	3RW30 46-1AB.4	45	72	3RW30 46-1AB.5

Table 8-24: 3RW3 motor ratings in acc. with IEC at 60 °C

8.7.5 Specifications in acc. with NEMA

The specified motor ratings are guide values.
The soft starter must be selected on the basis of the rated current I_e.
The motor ratings are based on the values specified in DIN 42 973 (kW) and NEC 96 / UL 508 (hp).

Ambient temperature = 40 °C

200V	230 V	460V	I_e	Order number	460V	575V	I_e	Order number
Pe in hp	Pe in hp	Pe in hp	In A	MLFB	Pe in hp	Pe in hp	In A	MLFB
1	1	3	4.8	3RW30 14-1CB.4	—	—	—	—
2	2	5	7.8	3RW30 16-1CB.4	—	—	—	—
3	3	7.5	11	3RW30 24-1AB.4	7.5	10	11	3RW30 24-1AB.5
5	5	10	17.5	3RW30 25-1AB.4	10	15	17.5	3RW30 25-1AB.5
7.5	7.5	15	25.3	3RW30 26-1AB.4	15	20	25.3	3RW30 26-1AB.5
7.5	7.5	20	27	3RW30 34-1AB.4	20	25	27	3RW30 34-1AB.5
10	10	25	34	3RW30 35-1AB.4	25	30	34	3RW30 35-1AB.5
10	15	30	42	3RW30 36-1AB.4	30	40	42	3RW30 36-1AB.5
20	20	40	62.1	3RW30 44-1AB.4	40	60	62.1	3RW30 44-1AB.5
20	25	50	68	3RW30 45-1AB.4	50	60	68	3RW30 45-1AB.5
30	30	75	99	3RW30 46-1AB.4	75	100	99	3RW30 46-1AB.5

Table 8-25: 3RW3 motor ratings in acc. with NEMA at 40 °C

Ambient temperature = 50 °C

200V	230 V	460V	I_e	Order number	460V	575V	I_e	Order number
Pe in hp	Pe in hp	Pe in hp	In A	MLFB	Pe in hp	Pe in hp	In A	MLFB
1	1	3	4.8	3RW30 14-1CB.4	—	—	—	—
2	2	5	7.8	3RW30 16-1CB.4	—	—	—	—
3	3	7.5	11	3RW30 24-1AB.4	7.5	10	11	3RW30 24-1AB.5
3	3	10	14	3RW30 25-1AB.4	10	10	14	3RW30 25-1AB.5
5	5	15	21	3RW30 26-1AB.4	15	15	21	3RW30 26-1AB.5
7.5	7.5	20	27	3RW30 34-1AB.4	20	25	27	3RW30 34-1AB.5
7.5	10	20	32	3RW30 35-1AB.4	20	30	32	3RW30 35-1AB.5
10	10	25	38	3RW30 36-1AB.4	25	30	38	3RW30 36-1AB.5
15	20	40	54	3RW30 44-1AB.4	40	50	54	3RW30 44-1AB.5
20	20	40	64	3RW30 45-1AB.4	40	60	64	3RW30 45-1AB.5
25	30	60	85	3RW30 46-1AB.4	60	75	85	3RW30 46-1AB.5

Table 8-26: 3RW3 motor ratings in acc. with NEMA at 50 °C

Ambient temperature = 60 °C

200 V	230 V	460 V	I_e	Order number	460 V	575 V	I_e	Order number
Pe in hp	Pe in hp	Pe in hp	In A	MLFB	Pe in hp	Pe in hp	In A	MLFB
0.75	0.75	2	4	3RW30 14-1CB.4	—	—	—	—
1.5	1.5	3	7	3RW30 16-1CB.4	—	—	—	—
2	2	5	9	3RW30 24-1AB.4	5	7.5	9	3RW30 24-1AB.5
3	3	7.5	12	3RW30 25-1AB-4	7.5	10	12	3RW30 25-1AB.5
5	5	10	18	3RW30 26-1AB.4	10	15	18	3RW30 26-1AB.5
5	7.5	15	23	3RW30 34-1AB.4	15	20	23	3RW30 34-1AB.5
7.5	7.5	20	27	3RW30 35-1AB.4	20	25	27	3RW30 35-1AB.5
7.5	10	20	32	3RW30 36-1AB.4	20	30	32	3RW30 36-1AB.5
10	15	30	46	3RW30 44-1AB.4	30	40	46	3RW30 44-1AB.5
15	20	40	54	3RW30 45-1AB.4	40	50	54	3RW30 45-1AB.5
20	25	50	72	3RW30 46-1AB.4	50	60	72	3RW30 46-1AB.5

Table 8-27: 3RW3 motor ratings in acc. with NEMA at 60 °C

9

3RE Enclosed starter

Section	Subject	Page
9.1	**Specifications/regulations/approvals**	**9-2**
9.2	**Device description**	**9-3**
9.3	**Application and areas of use**	**9-5**
9.3.1	The enclosed starter in motor branches	9-5
9.3.2	Planning and operation	9-5
9.4	**Accessories**	**9-6**
9.5	**Mounting and connection**	**9-7**
9.5.1	Mounting	9-7
9.5.2	Connection	9-7
9.5.3	Circuit diagrams	9-8
9.6	**Dimensional drawings**	**9-9**
9.7	**Technical Data**	**9-10**

9.1 Specifications/regulations/approvals

Standards

IEC 60 947-1, EN 60 947-1 (VDE 0660 Part 100)
IEC 60 947-5, EN 60 947-5 (VDE 0660 Part 200)
IEC 60 947-2, EN 60 947-2 (VDE 0660 Part 102)

The 3RE enclosed starter does not meet UL standards required for use in the United States.

Protection against electrical shock

The 3RE enclosed starters are touch safe according to DIN VDE 0106, Part 100.

9.2 Device description

Functions

The 3RE enclosed starters are available as direct starters or reversing starters that are used for both the switching of motors and the current dependent protection of motors. The switching of the motors is done by the 3RT10 contactor. The current dependent protection is achieved by using either the 3RU11 thermal overload relays or 3RB10 the electronic overload relays with the wide adjustment range.
These combination starters of contactor(s) and overload relay are mounted in a molded plastic enclosure which has the IP65 degree of protection rating thus provides protection against dust and spraying water. The operating device, that preforms the local manual on and off switching also fulfills this high degree of protection.

Device designs

The 3RE enclosed starters are available as a direct starter in three frame sizes for motors with one direction of rotation up to 22 kW at 400 V.

- The **frame size S00** is suitable for three phase motors up to 5.5 kW at 400 V AC and a maximum motor current of 12 A. The starters are available in the following two variants:
  - Molded plastic enclosure for a direct starter including the contactor – the thermal or electronic overload relay needs to be selected according to the rated motor current and ordered separately.
  - Molded plastic enclosure for a direct starter (without the contactor) – the contactor as well as the thermal or electronic overload relay need to be selected according to the rated motor current and ordered separately.

- The **frame size S0** is suitable for three phase motors up to 11 kW at 400 V AC and a maximum motor current of 25 A. The starters are available in the following two variants:
  - Molded plastic enclosure for a direct starter including the contactor – the thermal or electronic overload relay needs to be selected according to the rated motor current and ordered separately.
  - Molded plastic enclosure for a direct starter (without the contactor) – the contactor as well as the thermal or electronic overload relay need to be selected according to the rated motor current and ordered separately.

- The **frame size S2** is suitable for three phase motors up to 22 kW at 400 V AC and a maximum motor current of 50 A. The starters are available in the following variant:
  - Molded plastic enclosure for a direct starter (without the contactor) – the contactor as well as the thermal or electronic overload relay need to be selected according to the rated motor current and ordered separately.

The 3RE enclosed starters are available as reversing starters in two frame sizes for motors with two directions of rotation up to 11 kW at 400 V.

- The **frame size S00** is suitable for three phase motors up to 5.5 kW at 400 V AC and a maximum motor current of 12 A. The starters are available in the following two variants:
  - Molded plastic enclosure for a reversing starter including the contactor combination – the thermal or electronic overload relay needs to be selected according to the rated motor current and ordered separately.
  - Molded plastic enclosure for a reversing starter (without the contactor combination) – the contactor combination as well as the thermal or electronic overload relay need to be selected according to the rated motor current and ordered separately.

- The **frame size S0** is suitable for three phase motors up to 11 kW at 400 V AC and a maximum motor current of 25 A. The starters are available in the following variant:
  - Molded plastic enclosure for a reversing starter (without the contactor combination) – the contactor combination as well as the thermal or electronic overload relay need to be selected according to the rated motor current and ordered separately.

Detailed information

More detailed technical data on the 3RE enclosed starters can be found in Section 9.7 "Technical data".
Furthermore detailed information regarding the contactors can be found in Chapter 3 and for the overload relays in Chapter 4.

9.3 Application and areas of use

9.3.1 The enclosed starter in motor branches

Enclosed starter: Enclosure + contactor(s) + overload relay

The enclosed starters, which consist of a contactor (combination) and a thermal or electronic overload that are protected against dust and spraying water by the molded plastic enclosure, serve to switch the motor and provide current dependent protection for the motor. Short-circuit protection must be provided by fuses or circuit breakers (see short-circuit protection).

Short-circuit protection

Short-circuit protection needs to be provided by either fuses (fused method) or circuit breakers (fuseless method). The coordination of corresponding short-circuit protection devices for the combinations of contactor and overload can be found in Section 4.7 "Technical data". When selecting the load feeders from the table the types of coordination need to be taken into consideration.

Types of coordination

The types of coordination (DIN EN 60947-4-1 (VDE 0660 part 102)) describe how the devices perform after a short-circuit. They are broken down into two types:
With **type of coordination 1:** In the event of a short-circuit, persons and equipment must not be in danger from the contactor or starter. These do not have to be suitable for subsequent operation (without repair and replacement of parts).
With **type of coordination 2:** In the event of a short-circuit, persons and equipment must not be in danger from the contactor or starter. These must be suitable for subsequent operation. There is a risk of welding of the contacts.

9.3.2 Planning and operation

Areas of use

The 3RE enclosed starters serve to switch the motor and provide current dependent protection for the motor up to 22 kW at 400 V AC.

Supply voltage

The starters including the contactor come with the following rated control voltages:
Frame size S00: 230 V, 50/60 Hz and 400 V, 50/60 Hz
Frame size S0: 230 V, 50 Hz and 400 V, 50 Hz
The 3RU11 thermal overload relay and the 3RB10 electronic overload relay do not require any special supply voltage.

Setting

The 3RU11 thermal overload relay and the 3RB10 electronic overload relay are to be set for the rated motor current corresponding to the instructions for the overload relays.

Environmental requirements

The enclosed starters can be operated without being derated in the temperature range of 0 °C to +35 °C. At temperatures over 35 °C the highest current setting value of the setting range needs to be derated by a certain factor:

Ambient temperature in °C	Derating factor for the highest current setting value
+35 +45	1.0 0.87

The corresponding table shows that 45 °C has a derating factor of 13 %.

Switching ON/OFF

The direct starter switches on the load by means of the white button (I). The black button (O) is used to switch off the load.
The reversing starter can start the motor in the corresponding rotation by turning the upper switch clockwise- or counter clockwise. A change in the rotation of the motor is possible by pressing the black button (O).

Manual and automatic RESET

On the direct starter for the frame sizes S00 and S0 you can choose either automatic or manual reset of the overload relay. When using manual reset the black button (O) is the RESET button. This button must be actuated after an overload trip before it is possible to restart the motor.
The other starters come only with the automatic-RESET function.
Information regarding the setting of either automatic or manual reset on the overload relay can be found in chapter 4 for overload relays under the corresponding topic.

Recovery time

The recovery time for the overload relays after tripping due to an overload, phase imbalance, or phase loss can be found in chapter 4 for overload relays under the corresponding topic.

Tripping characteristics/phase loss protection

Information regarding tripping characteristics as a result of overload, phase imbalance, or phase loss can be found in chapter 4 for overload relays under the corresponding topic.

Enclosure

The enclosure comes with an IP65 degree of protection rating with grounding terminals, operating device and metric knockouts.

9.4 Accessories

There are no accessories for the 3RE enclosed starter.

9.5 Mounting and connection

9.5.1 Mounting

Mounting options

There are two options when mounting the 3RE enclosed starter:

- The first option is to use the 3RE10 direct starter or 3RE13 reversing starter. These consist of a molded plastic enclosure with operating device and integrated contactor or integrated contactor combination. All that needs to be done is to mount the overload relay (to be ordered separately) to the integrated contactor or integrated contactor combination in accordance with the installation instructions of the overload relay. The wiring is quick and easy with the prefabricated wiring (for related connection notes see section 9.5.2).
- The second option is to use the 3RE19 molded plastic enclosure with integrated operating device. The contactor/contactor combination and overload relay, can be bought separately as pre-assembled combinations or as individual components for self assembly (see note regarding various designs and the Mounting/Connection in Chapter 3 "Contactor combinations for reversing"). The overload relay needs to be installed according to the note regarding the direct mounting of the overload to the contactor or contactor combination. The self assembled or pre-assembled combination is snapped on to the DIN rail in the molded plastic housing.

Mounting position

When considering the mounting position of the starter, the allowable mounting position of the overload relay needs to be observed.

9.5.2 Connection

Connection options

The method of conductor connection as well as the type of screw driver, bit size, tightening torque and conductor cross-section (min.; max.) can be taken from the individual devices from sections 3.5 and 4.7.

Protection against electrical shock

The 3RE enclosed starters are touch safe according to DIN VDE 0106, part 100.

9.5.3 Circuit diagrams

The following shows the proper wiring of the 3RE enclosed starter.

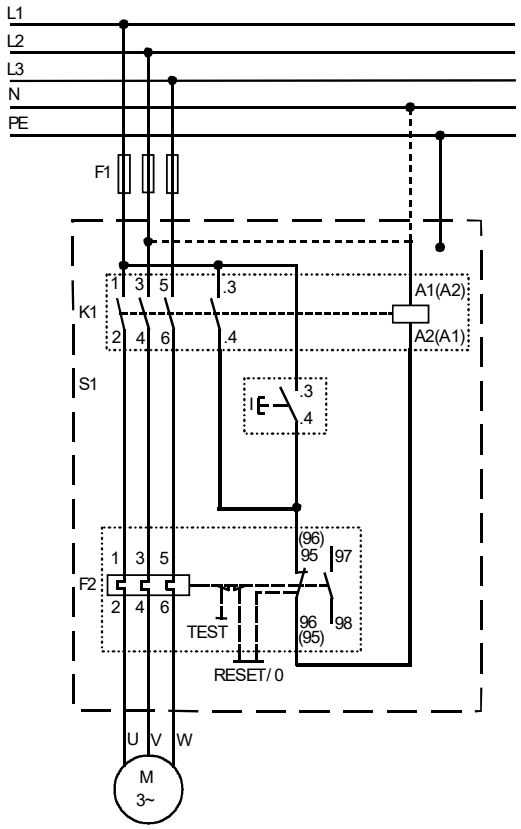

Direct starter, frame size S00 and S0

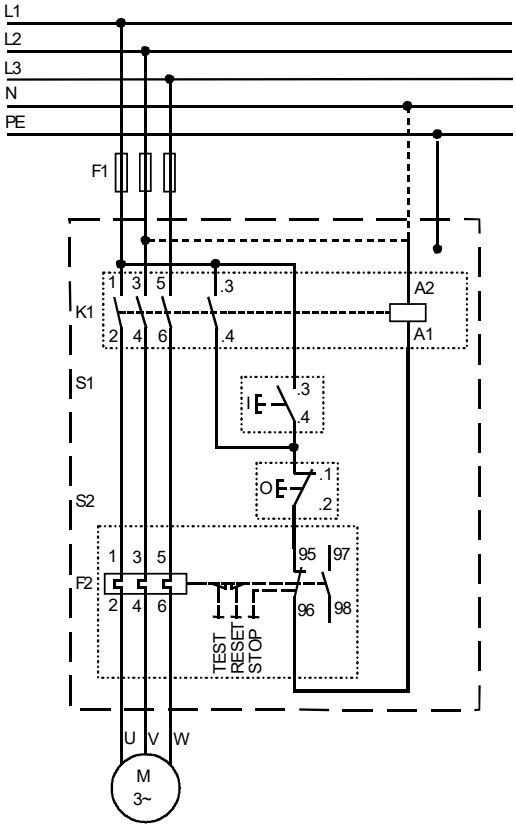

Direct starter, frame size S2

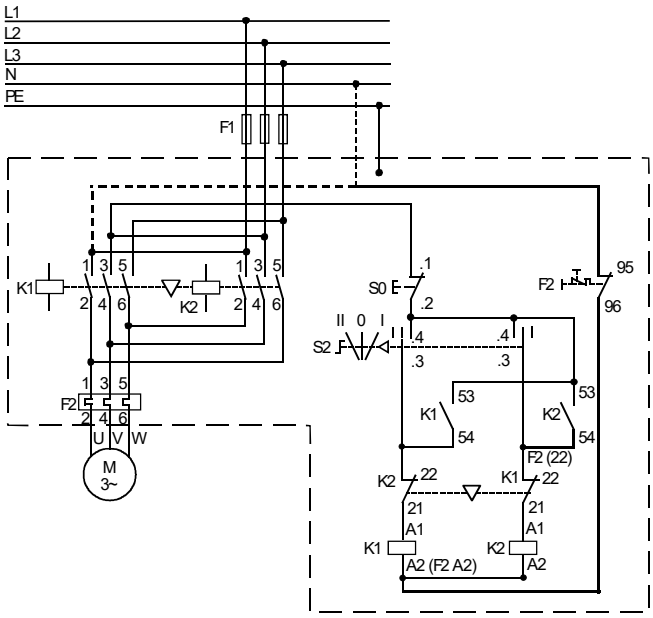

Reversing starter, frame size S00

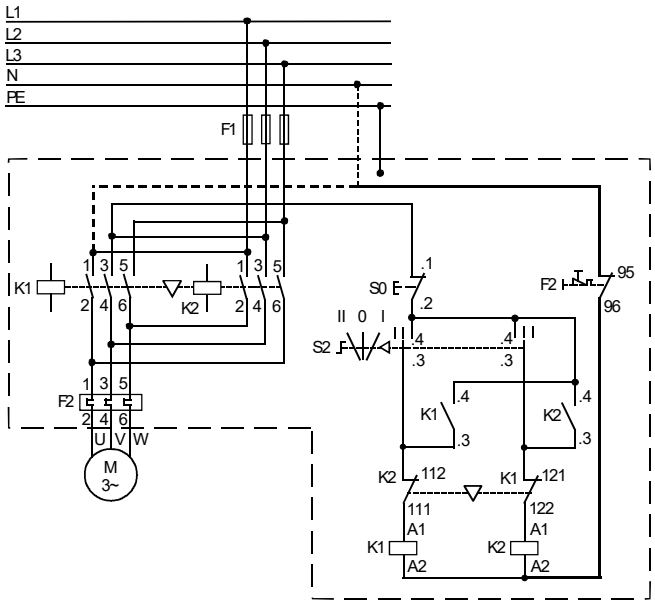

Reversing starter, frame size S0

9.6 Dimensional drawings

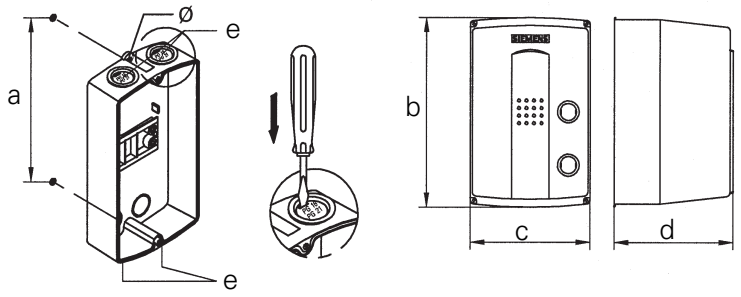

Fig. 9-1: Dimensions of the 3RE enclosed starter

mm	Ø	a	b	c	d	e (3RE1...-..B..)
Direct starter S00	4.5	150	160	85	98	2xM25
Direct starter S0	4.5	180	190	105	118	2xM25
Direct starter S2	7	240	250	160	160	2xM32
Reversing starter S00/S0						

9.7 Technical Data

3RE Enclosed starter

General data				
Type		**3RE1. 10, 3RE19 13**	**3RE1. 20, 3RE19 23**	**3RE10 30, 3RE19 33**
Specifications IEC 60 947-1, EN 60 947-1 (VDE 0660 Part 100) IEC 60 947-5, EN 60 947-5 (VDE 0660 Part 200) IEC 60 947-2, EN 60 947-2 (VDE 0660 Part 102)		 Yes Yes Yes		
Frame size		**S00**	**S0**	**S2**
Max. rated current $I_{N\ max}$ **(= max. rated operational current I_e)**	A	12	25	50
Rated insulation voltage U_e (Pollution degree 3)	V	400		
Rated impulse withstand voltage U_{imp}	kV	4		
Permissible ambient temperature In operation In storage	 °C °C	 -20 to +35 (over + 35 °C derating required) -55 to +80		
Permissible rated current of the overload relay with an ambient temperature: **+ 35 °C** **+ 45 °C**	 % %	 100 87		
Degree of protection according to IEC 60 947-1		IP65		
Shock-hazard protection according to VDE 0106 part 100		Touch safe		
Installation altitude	m	up to 2000 over sea level; exceeding that level on request		
Conductor cross-sections		see section 4.7 "Technical Data"		
Short circuit protection				
Main power circuit		see section 4.7 "Technical Data"		
Auxiliary circuit		see section 4.7 "Technical Data"		

Note: Further technical data for the individual devices can be found in Chapter 3 for contactors and Chapter 4 for overload relays.

Index

Numerics
35 mm rail 6-14
3-phase busbar system 2-43
3-phase busbars 2-43, 2-44
3RW3 soft starter 8-15
3RW31 special variant 8-11
4-pole contactor 3-25, 3-42, 3-110
4-pole contactor combination for reversing 3-42

A
A/B-Technique 1-28
Accessories 1-10, 3-54, 5-8
Actuator-sensor interface (AS-Interface) 1-22
Adapters for individual installation 4-33
Adding to the auxiliary contacts 3-58
Additional load module 3-75
Address 1-25
Addressing socket 1-25
Advantages of load feeders/combination starters with overload relays 4-14
Alarm switch 2-17
ALPHA/LOVAG 1-3
Ambient requirements 4-17, 4-24, 9-6
Ambient temperature 3-20
Analog modules 1-25
Analog output 4-7, 4-27
Application notes for the use of 3RV1 downstream from frequency converters 2-72
Approvals/test reports 4-2
Areas of use 4-16, 4-23, 9-5
AS-Interface compact starter 1-30
AS-Interface load feeder 1-29
AS-Interface SaW 1-27
Assembly kits for reversing combinations 3-39
Assembly kits for star-delta combinations 3-50, 3-51
ATEX-Approval 2-4
Auxiliary conducting path, integrated 3-57
Auxiliary connecting lead terminal, 3-pole 3-83
Auxiliary contact 3-25, 3-57, 3-58
Auxiliary contact elements with make-before-break contacting 3-61
Auxiliary contact repeat terminal 4-41
Auxiliary contact, BYPASSED 8-32
Auxiliary contactors 3-32
Auxiliary contacts 2-7, 2-17, 4-19, 5-6, 8-12
Auxiliary release 2-7, 2-17
Auxiliary switch blocks 3-57
Auxiliary switch, at side 3-60
Auxiliary switch, at the front 3-59

B
Banks of capacitors 3-26
Base plate 2-47
Bay 2-34
Bistable 4-26
Box terminal blocks 4-33
Box terminal construction type 6-5
Break-loose torque 8-14
Busbar adapter 2-39
Busbar mounting 5-14, 5-20
Busbar systems 2-39

C
Cable coupler capacitances 8-32
Cable release 4-32
Cage Clamp terminal 1-19, 3-32, 3-94
Cage Clamp-Technology 4-41
Cage-type clamping unit 1-19
Capacitor contactors 3-112
Capacitor switching capacity 3-27
Capacitor-switching contactors 3-26
Changing the contact pieces 3-103
Changing the magnetic coils 3-98
Characteristics 2-11
Circuit breaker 3RV1 2-5
Circuit diagrams 4-43, 5-23, 8-38, 9-8
Circuit example 8-29
Coasting-down time 8-31
Coding plug set (7PX9904) 7-8
Coding system 1-25
Coil voltage tolerance 3-21
Combination and wide-range voltages 7-6
Combination voltage 7-6
Combinations for reversing 3-118
Commissioning 8-30
Communication 1-10
Communication-capable motor starter 1-29
Compact modules 1-26
Compensating for different depths 3-52

Complete devices 5-5
Components 1-12
Conductor cross-sections 3-96, 5-21, 6-15
Conductor cross-sections for main and auxiliary connections 3-96
Connected in parallel 3-87
Connecting lead 6-12
Connection 3-94
Connection comb 6-12
Connection cross-sections 1-21
Connection module 1-31
Connection of the main conducting path 3-84
Connection options 4-41, 4-42, 9-7
Connection tool 1-18
Constant operation 3-21
Contact pieces 3-105
Contact reliability 3-15, 3-33
Contactor combinations for reversing 3-35, 3-118
Contactor combinations for wye-delta starting 3-120
Contactor relays 1-12, 3-110, 6-3
Contactors - 4-pole 3-110
Contactors with 4 main contacts 3-25, 3-42, 3-110
Contactors with an extended operating range 3-28, 3-113
Continuous loading when connected in 3-87
Control relays 1-12
Control supply voltage 5-6
Control supply voltage, failure 4-26
Control using PLC 3-76
Coordination type 4-12
Coordination type 1 3-13, 5-2
Coordination type 2 3-13, 5-2
Coordination types 5-2, 9-5
Correction factors 8-20
Coupling element 3-76
Coupling links 6-3
Coupling links for direct attachment 6-7
Cover 7-23
Current and voltage limitation 8-14
Current gain 6-10
Current setting 2-7, 8-20

D

DC brakes 8-14
DC power supply 4-33
Degree of protection 1-24, 2-3, 3-14
Device circuit diagrams 2-50
Device combinations 1-14
Device designs 4-8, 9-3
Device holder 2-42
Device variants 5-3
Diagnostics 8-33
Digital modules 1-25
Dimensional drawings 2-52, 5-24
DIN rail mounting 3-92, 5-18
Diode 3-80
Diode combination 3-80
Direct attachment 6-7
Direct current loads 2-10
Direct mounting 4-34, 4-40
Direct starters 5-14
Disconnector specifications 2-3
Display system 1-25
Disturbances 3-84

E

Electrical isolation 6-9
Electrical remote RESET 4-30
Electrical service life 3-4
Electromagnetic compatibility 7-2
Electromagnetic overcurrent release 2-12
Electromechanical remote reset 4-30
Electromotive force 3-84
Electronic device overload protection 8-14
Electronically optimized auxiliary switch blocks 3-58
EMC interference suppression module 3-84
EMC suppression module 3-84
Emergency-Stop 1-27
Emergency-Stop button 2-37
Emergency-Stop devices 1-27
EN 50 005 3-3
EN 50 011 3-3
EN 50 012 3-3
Enclosed starter
Enclosure + contactor(s) + overload relay 9-5
Enclosure 2-34, 9-6
End holder 6-13
End plate, coupling links 6-13
Energy-saving operation 8-14
Environmental protection 1-11
Environmental requirements 1-11
ET 200S 1-30
ET 200X 1-30
Event messages 8-32
Explosion protection 1-3, 2-11
Explosion-proof motors 4-3, 4-13
Extended operating range 3-28
Extended terminal covers 8-13

F

Failsafe motor starter 1-32
Fan 8-13, 8-35
Features/Customer benefits 4-6
Feeder lugs 2-44
Feed-in terminal block 3-49
F-Kit 1-31
Frequency converter 8-8
Frequency sensitivity of the short-circuit releases 2-12

Front plates 2-35, 2-36
Function diagrams 7-16
Function setting 7-14
Functional extra-low voltage (FELV) 3-9
Functions 4-15, 4-22, 7-13
Fuseless load feeder for rail mounting 5-9
Fuseless load feeders/combination starters for busbar mounting 5-14

G
Galvanic isolation 6-10
Ground fault protection 4-28

H
Hand-held controller 1-30
High Feature motor starter 1-31
High long-term stability 4-7
Higher ambient temperature 3-20
Housing 2-10, 2-34

I
Identifying letters 7-15
Indicator lights 2-37
Individual installation 4-37, 4-40
Input modules 6-5
Inrush currents 2-13
Installation guidelines 8-18
Installation on horizontal surfaces 3-93
Installation/Removal 4-30
Installing in series 3-31
Insulation displacement method 1-26
Integrated auxiliary contacts 4-6
Interface modules 6-3
Interference 6-10
Internal power supply 4-7
Isolating distance 8-3
Isolation 8-3, 8-11

K
Kits 5-5
KTA certificate 2-4

L
Label set 7-14, 7-22
Large current setting knob 4-6
Laser scanners 1-27
Latched auxiliary contactors 3-33
LED module 3-83
Level adaptation 6-10
Light curtains 1-27
Limit the residual voltage 3-75
Limiter function 2-70
Limiting tripping current 4-20
Line lengths 8-19
Link modules 5-8
Load control 7-6
Load feeder 3RA5 1-29
Load feeders 1-13
Load feeders (combination starters) with communication capability 1-13
Locking device 2-37
Locking during maintenance work 2-30
Looping of the cables 4-42
Low ambient temperatures 3-22
Lugs and connecting bars 1-18

M
Main and emergency stop switches 2-15
Making/ breaking capacity 3-87
Manual Motor Starter 2-66
Manual/auto RESET 4-15
Manual/automatic switchover 4-18
Manual-automatic RESET 4-18, 4-24, 9-6
Maximum number of auxiliary contacts 3-60
Mechanical interlock 3-119
Mechanical interlocking 3-25
Mechanical life 3-14
Mechanical thru-the-door reset 4-31
Minimal clearance 4-39, 4-40
Minimal power losses 4-7
Modular system 1-10
Mono- and bistable output relays 4-25
Monostable 4-26
Motor contactors 1-12
Motor protection 2-13
Motor protection with overload relay function 2-14
Motorized remote-control mechanism 2-22
Mounting 9-7
Mounting kits 5-5
Mounting options 3-91, 4-34, 4-40
Mounting plate 1-25
Mounting position 3-92, 4-39, 4-40, 9-7
Mounting systems 5-4

N
NC contact interlock 3-35
Network structures 1-24
No load 8-33
Nodes 1-24, 1-28
Normal and heavy starting 4-12
Normal switching duty 8-3, 8-11
Number of auxiliary switches, maximum 3-60

O
Operating limits 4-2
Operating time adjustment 7-8
Operation with Frequency converters 4-12
Optocoupler 6-2
Outgoing terminal rail 2-42
Output modules 6-5
Overload protection 3-48
Overload relay function 2-14
Overload relays 1-12, 1-13

Overload relays in star-delta combinations 4-11
Overload release 2-6
Overload warning 4-7, 4-28
Overvoltage 3-78

P

Panel mounting 1-16, 3-91, 5-19
Paralleling links 3-87
PELV 3-9
Permissible residual current 3-75
Phase firing 8-9
Phase loss 8-33
Phase loss protection 4-21, 4-29
Phase loss sensitivity 2-10, 2-13
Plug-in relay coupling links 6-6
Pole-changing motors 8-11
Positively driven contacts 3-7
Positively driven operation 3-7
Potentiometers 8-17
Power gain 6-10
Precharging resistors 3-26, 3-27
Procedure 1-20
PROFIBUS 1-22
PROFIsafe 1-23

R

Railway vehicles 2-4
Ramp time 8-31
Ramp times 8-17
RC-Element 3-79
Reactive-current compensation 3-26
Recovery time 4-19, 4-24, 9-6
Reduction in starting current 8-6
Reductions 8-16
Relay 6-2
Relay coupling modules 6-4
Remote-controlled mechanism 2-22
Removal 4-31, 4-32
Repeatability 7-7
RESET-Function 4-6
Resetting plunger 4-31
Resistance to extreme climates 4-3
Response threshold 2-15
Retainer, coupling links 6-13
Reversing 3-35
Reversing combination 3-35
Root 3 circuits 8-15
Rules for installing Circuit breakers/MSPs 2-71

S

Safe isolation 3-7, 3-8, 6-9
Safety at Work 1-27
Safety extra-low voltage (SELV) 3-9
Safety modules 1-27
Safety monitors 1-27
Safety technology 1-10
Screw terminals 3-94
Screw-type terminals 1-18, 6-8, 7-5
Sealing 2-8
Sealing cover 3-88, 4-16, 4-17, 4-23, 4-33
Second ramp time 8-32
Self-assembly kits 3-39
Self-monitoring 4-28
Semiconductor coupling links 6-22
Semiconductor coupling modules 6-4
Service life 3-22
Setting 4-16, 4-23, 8-11, 8-41, 9-5
Setting accuracy 7-7
Shielding 1-24
Shipbuilding certificates 2-4
Ships' systems 4-3
Shock protection 2-3, 3-3, 3-89, 4-3, 4-41, 4-42, 9-2, 9-7
Short time operation 3-20
Short-circuit breaking capacity 2-10, 2-68
Short-circuit protection 2-10, 3-13, 4-12, 9-5
Short-circuit release 2-6, 2-11
Shunt release 2-19
Side module 2-42
Signal transmission 6-10
SIGUARD power modules 1-31
SIKOSTART 3RW22 8-14
SIKOSTART 3RW34 8-15
Single-phase loads 2-10
SIRIUS NET 1-29
SIRIUS system 1-5
Snap-on attachment 3-92, 6-7, 6-14, 8-37
Snap-on mounting 1-16, 5-18
Soft coasting-down function 8-12
Soft starter 1-13, 8-3, 8-9
Soft starting function 8-12
Soldering pin adapter 3-85
Soldering pin connector 2-48, 3-32, 3-85
Solid-state time relay blocks with semiconductor output 3-72
Solid-state time relays 1-13
Stand-alone installation 8-18
Standard 3RW30 variant 8-11
Standard motor starter 1-31
Standards 2-3, 4-2, 7-2
Star starting 8-7
Star-delta combinations 3-46, 8-16
Star-delta starter 8-7
Star-delta starting 3-48
Start contact 7-5
Starter
  Contactor + overload relay 4-10
Starter protection 2-13
Starting current 8-6
Starting current ratio 3-48
Starting time 8-31
Starting torque 8-16
Starting voltage 8-17, 8-31

Status display 4-6
Status indication 4-19, 4-25
STOP-Function 4-19, 4-25
Straight-through current transformer 4-6, 4-41, 4-42
Summation current transformer 4-33
Supply interruption in the bypassed state 8-34
Supply power 4-16, 4-23, 9-5
Supply voltage 8-33
Surface casing 2-34
Surge suppressor 3-80
Switch ES motor starter 1-32
Switching capacitive loads 6-8
Switching capacity 3-4, 3-5, 3-6, 7-2
Switching direct current 2-15
Switching frequency 8-20, 8-31
Switching inductive loads 6-8
Switching ON/OFF 9-6
Switch-over pause 3-35, 3-48
Switch-over time 3-35

T

Technical specifications 2-63, 8-41
Temperature compensation 4-7
Temperature monitoring 8-14
Terminal covers 3-89, 4-33, 8-13
Terminal for contactor coils 3-49, 4-41
Terminal markings 3-3
Terminals for contactor coils 3-49
Terminating resistors 1-24
TEST-Function 4-6, 4-19, 4-25
Testing overload tripping 2-10
Thermal load carrying capacity 3-21
Thermal overload release 2-11, 2-13
Thermistor motor protection-Function 4-27
Thermistor-Motorschutz-Funktion 4-27
Three-phase current asynchronous motors 8-6
Three-phase induction motors 2-13
Three-pole load 2-11
Time ramps 8-12
Time-current characteristics 2-3
Time-delay auxiliary contact block 3-116
Time-delay auxiliary switch 3-69
Time-delay time relay blocks, on-delay 3-116
Time-delayed overload release 4-2
Time-delayed overload releases 4-2
Timing diagram 8-33
Tool 1-20
Transformer protection 2-13
Trip classes > CLASS 10 4-7
Tripping characteristics 2-13, 4-20, 4-28
Tripping characteristics/Phase loss protection 9-6
Tripping classes 2-6, 4-2
Two-conductor connection 3-95
Two-tier construction type 6-5
Two-wire time relay 7-6, 7-19
Type E 2-66

U

UL/CSA 1-4
Undervoltage release 2-19
Uniformity 1-10
Unwanted signals 3-78
Utilization categories 3-3

V

Vacuum-switching tubes 3-103
Variable setting of the trip classes 4-7
Varistor 3-79
Voltage ranges 3-34

W

Weld free 3-13
Wide current adjustment ranges 4-7
Wide-range voltage 7-5
Wiring kits 5-8