SIEMENS

Industrial Controls

Protection devices SIRIUS 3RV Motor Starter Protectors

Equipment Manual

Introduction 1

Standards 2

Safety instructions 3

Product description 4

Product combinations 5

Functions 6

Configuration 7

Mounting 8

Connection 9

Operation 10

Accessories 11

Technical data 12

Circuit diagrams 13

Types of coordination A

References B

Dimension drawings (dimensions in mm) C

02/2026

A5E03656507320A/RS-AN/014

Промэлектроника, sales@prom-elec.com

sales@prom-elec.com / ООО ПРОМЭЛЕКТРОНИКА

Legal information

Warning notice system

This manual contains notices you have to observe in order to ensure your personal safety, as well as to prevent damage to property. The notices referring to your personal safety are highlighted in the manual by a safety alert symbol, notices referring only to property damage have no safety alert symbol. These notices shown below are graded according to the degree of danger.

⚠ DANGER
indicates that death or severe personal injury **will** result if proper precautions are not taken.

⚠ WARNING
indicates that death or severe personal injury **may** result if proper precautions are not taken.

⚠ CAUTION
indicates that minor personal injury can result if proper precautions are not taken.

NOTICE
indicates that property damage can result if proper precautions are not taken.

If more than one degree of danger is present, the warning notice representing the highest degree of danger will be used. A notice warning of injury to persons with a safety alert symbol may also include a warning relating to property damage.

Qualified Personnel

The product/system described in this documentation may be operated only by **personnel qualified** for the specific task in accordance with the relevant documentation, in particular its warning notices and safety instructions. Qualified persons are those who, because of their training and experience, are familiar with the installation, assembly, commissioning, operation, decommissioning and disassembly of the product and can recognize risks and avoid possible hazards.

Proper use of Siemens products

Note the following:

⚠ WARNING
Siemens products may only be used for the application described in the catalog and the associated usage information. If products and components from other manufacturers are used, these must be recommended or approved by Siemens. Proper transport, storage, installation, assembly, commissioning, operation and maintenance are required to ensure that the products operate safely and without any problems. The permissible ambient conditions must be complied with. The information in the relevant documentation must be observed.

Trademarks

All names identified by ® are registered trademarks of Siemens Aktiengesellschaft. The remaining trademarks in this publication may be trademarks whose use by third parties for their own purposes could violate the rights of the owner.

Disclaimer of Liability

We have reviewed the contents of this publication to ensure consistency with the hardware and software described. Since variance cannot be precluded entirely, we cannot guarantee full consistency. However, the information in this publication is reviewed regularly and any necessary corrections are included in subsequent editions.

Siemens Aktiengesellschaft
Smart Infrastructure
Electrical Products
Postfach 10 09 53
93009 Regensburg
GERMANY

Ⓟ 04/2026 Subject to change

Copyright © Siemens 2011.
All rights reserved

Table of contents

1 Introduction ... 9

1.1 Responsibility of the user for system configuration and functionality ... 9

1.2 Purpose of the manual ... 11

1.3 Change documentation ... 12

1.4 Advantages through energy efficiency ... 13

1.5 Required basic knowledge ... 14

1.6 Scope of the manual ... 15

1.7 Siemens Industry Online Support ... 16

1.8 Further documentation ... 18

1.9 Siemens Industry Online Support app ... 19

1.10 Support Request ... 20

2 Standards ... 21

2.1 Requirements for switching high-efficiency motors ... 22

2.2 Notes on the protection of device connections ... 23

3 Safety instructions ... 25

3.1 General safety notes ... 25

3.2 Cybersecurity information ... 26

3.3 Intended use ... 27

3.4 Current information about operational safety ... 28

3.5 Recycling and disposal ... 29

4 Product description ... 31

4.1 Introduction ... 31

4.2 Versions ... 33

4.3 Applications ... 34

4.4 Motor starter protectors ... 35

4.5 Performance features ... 42

5 Product combinations ... 43

6 Functions ... 45

6.1 Overload and short-circuit protection ... 46

6.1.1 Tripping classes ... 47

6.1.2 Tripping characteristics ... 47

6.2 Phase loss sensitivity ... 50

6.3 Protection of single-phase loads ... 51
6.4 Test function ... 52
7 Configuration ... 53
7.1 Performance features ... 53
7.2 TIA Selection Tool ... 55
7.3 Short-circuit protection ... 56
7.3.1 Short-circuit breaking capacity ... 57
7.3.1.1 Short-circuit breaking capacity for motor starter protectors ... 57
7.3.1.2 Short-circuit breaking capacity for 3RV1.1 motor starter protectors in an enclosure ... 65
7.3.1.3 Short-circuit breaking capacity for 3RV2.1 and 3RV2.2 motor starter protectors in an enclosure ... 68
7.3.1.4 Short-circuit breaking capacity for motor starter protectors in the IT system ... 76
7.3.1.5 Short-circuit breaking capacity for motor starter protectors with limiter function ... 83
7.4 Motor protection ... 85
7.5 System protection ... 86
7.6 Motor protection with overload relay function ... 87
7.7 Using 3RV1011 and 3RV2 motor starter protectors with highly energy-efficient motors (IE3 / IE4) ... 88
7.7.1 General information on the startup characteristics of highly energy-efficient motors (IE3 / IE4) ... 88
7.7.1.1 Short-circuit detection ... 88
7.7.1.2 Making and breaking capacity of motor starter protectors ... 88
7.7.1.3 Rated motor current/setting scale ... 89
7.7.2 Optimization of 3RV1011 and 3RV2 motor starter protectors for IE3 / IE4 motors ... 89
7.7.3 Technical modifications/restrictions of 3RV2 motor starter protectors ... 91
7.8 Short-circuit protection for starter combinations ... 92
7.9 Transformer protection ... 94
7.10 Main switch ... 95
7.11 Fuse monitoring ... 96
7.12 Voltage transformer circuit breaker ... 98
7.13 Use in IT systems ... 100
7.14 Devices for North America (UL/CSA) ... 101
7.14.1 Approval in compliance with UL 60947-4-1 (UL 508) / CSA C22.2 No. 14 (CSA-C22.2 No. 60947-4-1) ... 101
7.14.1.1 "Manual motor controller", group installation ... 101
7.14.1.2 "Manual motor controller suitable for tap conductor protection in group installations" ... 102
7.14.1.3 "Self-protected combination motor controller (type E)" ... 103
7.14.2 Approval as "circuit breaker" according to UL 489/CSA C 22.2 No. 5 ... 105
7.15 Application environment ... 106
7.16 Selecting the motor starter protectors ... 110
7.17 Project guidelines for use downstream of frequency converters/inverters with pulsed voltage ... 111
7.17.1 Effects of high-frequency currents on the thermal overload release (size S00 to S2) ... 111

7.17.2 Capacitive leakage currents ... 113
7.17.3 Speed control of motors with characteristic-controlled frequency converters ... 113

8 Mounting ... 115

8.1 Warning notice ... 115

8.2 Standard mounting ... 116
8.2.1 Minimum clearances and mounting position ... 116
8.2.2 Mounting/Disassembly ... 118

8.3 Mounting in limiter circuit ... 124

9 Connection ... 131

9.1 Warning notice ... 131

9.2 Conductor cross-sections ... 132
9.2.1 Conductor cross-sections ... 132
9.2.2 Conductor cross-sections for screw-type connection systems ... 132
9.2.3 Conductor cross-sections for spring-loaded connection systems ... 140
9.2.4 Conductor cross-sections for ring cable lug connection system ... 142

10 Operation ... 145

10.1 Setting the current ... 146

10.2 Testing the overload release ... 148

10.3 Testing the overload relay function (3RV21) ... 150

10.4 Securing ... 151

10.5 Reclosing after tripping ... 152

11 Accessories ... 153

11.1 Accessories overview ... 153

11.2 Installation rules/Component rules ... 157

11.3 Auxiliary switch ... 158
11.3.1 Description ... 158
11.3.2 Mounting ... 160
11.3.3 Disassembly ... 162

11.4 Signaling switch ... 163
11.4.1 Description ... 163
11.4.2 Mounting ... 165
11.4.3 Disassembly ... 168
11.4.4 Operation and diagnostics ... 169

11.5 Auxiliary release ... 171
11.5.1 Description ... 171
11.5.2 Auxiliary release voltage ranges ... 174
11.5.3 Mounting ... 175
11.5.4 Disassembly ... 175

11.6 Disconnector module ... 176
11.6.1 Description ... 176
11.6.2 Mounting ... 178
11.6.3 Isolation and shut-off ... 180

11.7 Phase barriers / terminal block UL 60947-4-1 (UL 508) "Type E" ... 181
11.7.1 Description ... 181
11.7.2 Mounting terminal block UL 60947-4-1 (UL 508) "Type E" ... 183
11.7.3 Mounting phase barriers ... 185

11.8 Door-coupling rotary operating mechanism (not for 3RV1011 and 3RV1611) ... 188
11.8.1 Description ... 188
11.8.2 Mounting ... 190
11.8.2.1 Mounting the door-coupling rotary operating mechanism for standard conditions ... 191
11.8.2.2 Mounting the door-coupling rotary operating mechanism for harsh conditions ... 199
11.8.3 Operation ... 208

11.9 Enclosures and mounting accessories ... 218
11.9.1 Description ... 218
11.9.2 Mounting ... 222

11.10 Sealable cover ... 228
11.10.1 Description ... 228
11.10.2 Mounting ... 228

11.11 Insulated 3RV1915 (S00/S0) and 3RV1935 (S2) 3-phase busbar system ... 229
11.11.1 Description ... 229
11.11.2 Versions ... 231
11.11.3 Mounting ... 235

11.12 8US busbar adapter ... 240
11.12.1 Description ... 240
11.12.2 Versions ... 241
11.12.3 Mounting ... 244
11.12.4 Disassembly ... 248

11.13 3RV2917 infeed system ... 250
11.13.1 Description ... 250
11.13.2 Installation guidelines ... 255
11.13.3 Derating ... 256
11.13.4 Mounting ... 257

11.14 Link module for attaching a contactor ... 262
11.14.1 Description ... 262
11.14.2 Mounting ... 262

11.15 Terminal cover for cable lug connection and busbar connection ... 263
11.15.1 Description ... 263
11.15.2 Mounting ... 263

11.16 Terminal covers for box terminal block ... 265
11.16.1 Description ... 265
11.16.2 Mounting ... 265

11.17 Terminal cover for circuit breaker and the terminal block UL 60947-4-1 (UL 508) "Type E" ... 266
11.17.1 Description ... 266
11.17.2 Mounting ... 266

12 Technical data ... 269

12.1 Technical specifications in the Siemens SiePortal ... 269

13 Circuit diagrams ... 271

13.1 CAx data in the Siemens SiePortal ... 271
13.2 Internal circuit diagrams for 3RV1 motor starter protectors / circuit breakers ... 272
13.3 Internal circuit diagrams for 3RV2 motor starter protectors ... 273
13.4 Internal circuit diagrams for auxiliary switches ... 275
13.5 Internal circuit diagrams for motor starter protector accessories ... 276
A Types of coordination ... 277
A.1 Types of coordination ... 277
B References ... 279
B.1 References ... 279
B.2 Manuals - SIRIUS Modular System ... 280
C Dimension drawings (dimensions in mm) ... 283
C.1 CAx data in the Siemens SiePortal ... 283
C.2 Dimension drawings 3RV1 motor starter protectors ... 284
C.2.1 Dimension drawings 3RV1.1 motor starter protectors (size S00) ... 284
C.3 Dimension drawings for 3RV2 motor starter protectors ... 286
C.3.1 Dimension drawings for 3RV2 motor starter protectors (sizes S00 and S0) ... 286
C.3.2 Dimension drawings for 3RV2 motor starter protectors (size S2) ... 289
C.3.3 Dimension drawings 3RV2 motor starter protectors / circuit breakers (size S3) ... 290
C.4 Dimension drawings for disconnector modules ... 292
C.5 Dimension drawings for busbars ... 293
C.6 Dimension drawings for 3RV2926-0 door-coupling rotary operating mechanisms ... 299
C.7 Dimension drawings for 3RV2926-1 door-coupling rotary operating mechanisms ... 301
C.8 Dimension drawings for 3RV29.6-2. door-coupling rotary operating mechanisms for arduous conditions ... 305
C.9 Dimension drawings for 3RV29.6-3 door-coupling rotary operating mechanisms for harsh conditions. ... 306
C.10 Dimension drawings for terminals for "Self-Protected Combination Motor Controller Type E" according to UL 60947-4-1 (UL 508) ... 310
C.11 Dimension drawings for 3RV19.3-1.A00 molded-plastic surface-mounting enclosure ... 312
C.12 Dimension drawings for 3RV1923-1.A01 cast-aluminum surface-mounting enclosure ... 315
C.13 Dimension drawings for 3RV19.3-2.A00 molded-plastic flush-mounting enclosure ... 316
C.14 Dimension drawings for 3RV1923-4 molded-plastic front plates ... 318
C.15 Dimension drawings 3RV2921-.M signaling switch ... 319
Index ... 321

Introduction 1

1.1 Responsibility of the user for system configuration and functionality

The SIRIUS 3RV motor starter protectors described here have been developed to carry out switching and protection functions as part of a plant or machine.

SIRIUS 3RV2 motor starter protectors are available in the following versions:

- Motor starter protectors, standard version (3RV20)

  Short-circuit and overload protection
- Motor starter protectors with relay function (3RV21)

  Short-circuit protection and auto-RESET in the event of overload in one device
- MSP for starter combinations (3RV23)

  Short-circuit protection only

  Combined with solid-state overload relay, large setting ranges and auto-RESET
- MSP for transformer protection (3RV24)

  Standard version for transformers
- Circuit breakers in accordance with UL489 (3RV27/3RV28)
  Overload protection, short-circuit protection, and transformer protection

3RV1 motor starter protectors are available in the following versions:

- Motor starter protector standard version (3RV1011)

  Short-circuit and overload protection
- Circuit breaker for fuse monitoring (3RV1611-0BD10)
- Voltage transformer circuit breakers for distance protection (3RV1611-1.G14)

Siemens AG, its regional offices, and associated companies (hereinafter referred to as "Siemens") cannot guarantee all the properties of an overall installation or machine that has not been designed by Siemens.

Nor can Siemens assume liability for recommendations that appear or are implied in the following description. No new guarantee, warranty, or liability claims beyond the scope of the Siemens general terms of supply are to be derived or inferred from the following description.

Note

With regard to the design of a system, comply with all valid national installation specifications and standards.

1.2 Purpose of the manual

Purpose of the manual

This manual describes the motor starter protector and provides the following information:

- Information on integrating the motor starter protector into the system environment.
- Information on necessary hardware components.
- Information on installing, connecting and operating the motor protector starter.
- Technical information such as dimension drawings and unit wiring diagrams.

The information in this manual enables you to configure and commission the motor starter protectors.

1.3 Change documentation

Version	Changes
02/2026	- Conductor cross-sections for screw-type connection systems have been added in the "Conductor cross-sections" chapter. - References to the 3RV2921-5M have been removed. – A conductor cross-section table has been added to the technical specifications.

1.4 Advantages through energy efficiency

Siemens offers you a unique portfolio for efficient energy management in industry – a process that serves to optimally shape your energy requirement. Operational energy management is subdivided into three phases:

- Identifying
- Evaluating
- Realizing

Siemens supports you with suitable hardware and software solutions in every phase of a project.

More information can be found on the Internet (https://www.siemens.com/global/en/products/automation/topic-areas/sustainable-industries/industrial-energy-efficiency.html).

3RV motor starter protectors contribute to energy efficiency throughout the plant as follows:

- Minimization of energy losses through optimization of the bimetal trip units
- Reduced intrinsic power loss
- Reduced control cabinet heat development
- Smaller control cabinet air conditioners can be used

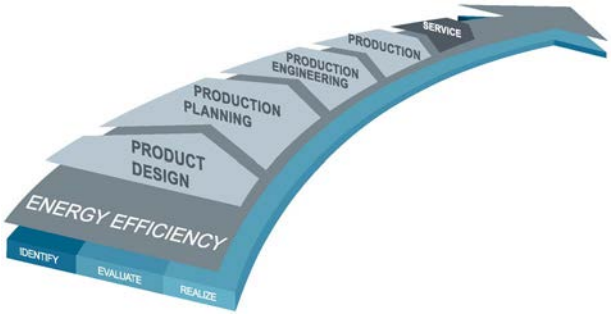

Figure 1-1 Energy management process

1.5 Required basic knowledge

Required basic knowledge

To understand these operating instructions you should have a general knowledge of automation engineering and low-voltage switchgear.

1.6 Scope of the manual

Scope of the manual

The manual is valid for these motor starter protectors. It contains a description of the devices that is valid at the time of publication.

1.7 Siemens Industry Online Support

Information and Service

In Siemens Industry Online Support, you can obtain up-to-date information from our global support database quickly and simply. To accompany our products and systems, we offer a wealth of information and services that provide support in every phase of the lifecycle of your machine or plant – from planning and implementation, through commissioning, up to maintenance and modernization:

- Product support
- Application examples
- Services
- Forum
- mySupport

Link: Siemens Industry Online Support (https://support.industry.siemens.com/cs/ww/en)

Product support

You will find here all the information and comprehensive know-how covering all aspects of your product:

- **FAQs**

  Our answers to frequently asked questions.
- **Manuals/operating instructions**

  Read online or download, available as PDF or individually configurable.
- **Certificates**

  Clearly sorted according to approving authority, type and country.
- **Characteristic curves**

  For support in planning and configuring your system.
- **Product announcements**

  The latest information and news concerning our products.
- **Downloads**

  You can find here updates, service packs, HSPs and much more for your product.
- **Application examples**

  Function blocks, background and system descriptions, performance statements, demonstration systems, and application examples, clearly explained and represented.
- **Technical data**

  Technical product data for support in planning and implementing your project.

Link: Product support (https://support.industry.siemens.com/cs/ww/en/ps)

mySupport

With "mySupport", your personal workspace, you get the very best out of your Industry Online Support. Everything to enable you to find the right information every time.

The following functions are now available:

- **Personal messages**
  Your personal mailbox for exchanging information and managing your contacts
- **Inquiries**
  Use our online form for specific solution suggestions, or send your technical inquiry directly to a specialist in Technical Support
- **Notifications**
  Make sure you always have the latest information - individually tailored to your needs
- **Filters**
  Simple management and re-use of your filter settings from Product Support and the Technical Forum
- **Favorites / Tags**
  Create your own knowledge database by assigning "Favorites" and "Tags" to documents – simply and efficiently
- **Entries last viewed**
  Clear presentation of your last viewed entries
- **Documentation**
  Configure your individual documentation from different manuals – quickly and without complications
- **Personal data**
  Change personal data and contact information here
- **CAx data**
  Simple access to thousands of items of CAx data such as 3D models, 2D dimension drawings, EPLAN macros and much more

1.8 Further documentation

Further documentation

To install and connect the motor starter protectors, you require the operating instructions of the motor starter protectors used.

You can find a list of operating instructions and an overview of the manuals pertaining to the SIRIUS modular system in the Appendix "References (Page 279)".

1.9 Siemens Industry Online Support app

Siemens Industry Online Support app

The Siemens Industry Online Support app provides you access to all the device-specific information available on the Siemens Industry Online Support portal for a particular article number, such as operating instructions, manuals, data sheets, FAQs etc.

The Siemens Industry Online Support app is available for Android and iOS:

Android

iOS

1.10 Support Request

You can submit and manage support requests in the mySupport Cockpit. To do this, you must register once.

Support request:	Internet (https://support.industry.siemens.com/My/ww/en/requests)

Standards

2

Applicable standards

3RV motor starter protectors / circuit breakers meet the requirements of the following standards:

Table 2- 1 Applicable standards

Applications	Applicable standards
3RV motor starter protectors	IEC 60947-1, EN 60947-1 (VDE 0660 Part 100) IEC 60947-2, EN 60947-2 (VDE 0660 Part 101)
3RV motor starter protectors[1)]	UL 60947-4-1 (UL 508)
3RV27/28 circuit breakers	UL 489
Motor starter protectors	IEC 60947-4-1, EN 60947-4-1 (VDE 0660 Part 102)
Auxiliary switches	IEC 60947-5-1/VDE 0660 Part 200
Terminal designations	DIN EN 50 011
Isolating function according to features of main and EMERGENCY OFF switches	• IEC 60947-2 • IEC 60204 (VDE 0113 Part 1)
Isolating features	DIN EN 60947-1
Touch protection on the front	IEC 60529
Degree of protection IP20 on the front	IEC 60529

1) Without 3RV27/28

2.1 Requirements for switching high-efficiency motors

The increased requirements for protection devices and switchgear when switching high-efficiency motors are covered by the new utilization category AC-3e introduced in the IEC 60947-4-1 product standard.
The utilization category AC-3e takes into account the higher switch-on characteristic of efficiency-enhanced motors. This is reflected, for example, in a higher starting current when starting squirrel-cage motors.
All SIRIUS protection devices and switchgear that are subject to the IEC 60947-4-1 product standard meet the increased requirements in accordance with utilization category AC-3e and are suitable for use with high-efficiency motors.

The specifications for 3-phase line supply according to IEC 60947-4-1 are valid for the following line system configurations:

Voltage specification Ue in the Equipment Manual	**Line system configurations**	
	Three-phase four-wire systems	**Three-phase three-wire systems**
	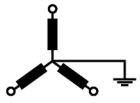	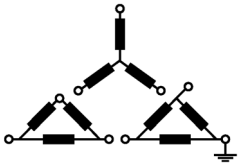
[V]	[V]	[V]
230	--	230
400	230 / 400	400
440	260 / 440	440
500	--	500
690	400 / 690	690 (only from size S3)
1000	--	1000

-- not specified

2.2 Notes on the protection of device connections

The specifications for short-circuit protection (fuses, circuit breakers, or miniature circuit breakers) are available for the device connections of the main circuit and the auxiliary circuit. In order to ensure a holistic view for the protection of the device connections, the manufacturer is obliged to provide all relevant information for short-circuit protection and overcurrent protection.
If, for example, device connections for the control supply voltage, the supply voltage, or digital inputs/digital outputs are not connected to self-limiting current sources or energy sources, you can find the relevant information in the Equipment Manual or the technical data sheet.

Reference

Other standards that 3RV motor starter protectors conform to are listed in the chapter Technical data (Page 269). SIRIUS components have been approved by a whole range of bodies for various sectors (shipbuilding, etc.). An up-to-date list of approvals is provided in the appendix of the Siemens IC 10 Catalog - "SIRIUS Industrial Controls". You will find more information and downloadable certificates on the Internet (https://support.industry.siemens.com/cs/ww/en/ps/16244/cert).

Safety instructions

3

3.1 General safety notes

DANGER

Hazardous voltage.
Will cause death or serious injury.

Turn off and lock out all power supplying this device before working on this device.

3.2 Cybersecurity information

Siemens provides products and solutions with industrial cybersecurity functions that support the secure operation of plants, systems, machines and networks.

In order to protect plants, systems, machines and networks against cyber threats, it is necessary to implement – and continuously maintain – a holistic, state-of-the-art industrial cybersecurity concept. Siemens' products and solutions constitute one element of such a concept.

Customers are responsible for preventing unauthorized access to their plants, systems, machines and networks. Such systems, machines and components should only be connected to an enterprise network or the internet if and to the extent such a connection is necessary and only when appropriate security measures (e.g. firewalls and/or network segmentation) are in place.

For additional information on industrial cybersecurity measures that may be implemented, please visit
https://www.siemens.com/cybersecurity-industry.

Siemens' products and solutions undergo continuous development to make them more secure. Siemens strongly recommends that product updates are applied as soon as they are available and that the latest product versions are used. Use of product versions that are no longer supported, and failure to apply the latest updates may increase customer's exposure to cyber threats.

To stay informed about product updates, subscribe to the Siemens Industrial Cybersecurity RSS Feed under
https://www.siemens.com/cert.

3.3 Intended use

Improper use of 3RV circuit breakers

Improper use of the circuit breakers and their accessories result in a risk of death, risk of serious injury or property damage.

This equipment is only allowed to be used for the applications described in the catalog and in the technical description, and only in conjunction with non-Siemens equipment and components recommended by Siemens.

Correct transport, storage, installation and assembly, as well as careful operation and maintenance, are required to ensure that the product operates safely and without faults.

Before you run any sample programs or programs that you have written yourself, make sure that running the plant cannot cause injury to anyone else or damage to the machine itself.

3.4 Current information about operational safety

Important note for maintaining the operational safety of your system

Please take note of our latest information. Systems with safety-oriented characteristics are subject to special operational safety requirements on the part of the operator. The supplier is also obliged to comply with certain actions when monitoring the product. By subscribing to the appropriate newsletter, you will ensure that you are always up-to-date and able to make changes to your system, when necessary:

For this purpose, go to the page: SIEMENS newsletter (www.siemens.com/sirius/newsletter)

Click "Subscribe to newsletter".

3.5 Recycling and disposal

For environmentally-friendly recycling and disposal of your old device, contact a company certified for the disposal of used electrical and electronic equipment, and dispose of the device as specified in the regulations for your particular country.

Product description

4

4.1 Introduction

Applications

3RV motor starter protectors are compact current-limiting devices which have been optimized for load feeders. They are used for protecting and switching three-phase motors and other loads. The scalable setting ranges mean that a suitable motor starter protector can provide protection for all standard motors at ambient temperatures of ≤ 60 °C. 3RV1.11 motor starter protectors have a toggle switch. 3RV2 motor starter protectors are uniformly fitted with rotary operating mechanisms.

Reference

More information ...	Can be found in the chapter titled ...
on permissible ambient temperatures	Application environment (Page 106)

Functions

The motor starter protectors protect loads against overloads and short circuits. They also feature a lockable rotary actuator/toggle switch to facilitate manual on/off switching (e.g. in the event of repair work).

System integration

In both electrical and mechanical terms the motor starter protectors are compatible with 3RT contactors, 3RF solid-state contactors, and 3RW soft starters. They can be integrated in the feeder by means of direct mounting. 3RV1 motor starter protectors are available in size S00. 3RV2 motor starter protectors are available in four sizes, S00, S0, S2 and S3.

Note

3RF solid-state contactors are available in two sizes, S00 and S0.

Connection systems

The motor starter protectors are available with the following connection system options (in the main circuit):

- Screw-type connection system (up to 100 A)
- Spring-loaded connection system (3RV2 only, in sizes S00 and S0 up to 32 A)
- Ring cable lug connection system (3RV2 only, in size S3)

Accessories

The accessories have been tailored to the motor starter protectors and they are available with a screw-type or spring-loaded connection system. Accessories can be fitted easily and without the need for tools.

4.2 Versions

Device versions

- Motor starter protector standard version (3RV1011, 3RV20)

  Overload and short-circuit protection
- Motor starter protectors with relay function (3RV21)

  Short-circuit protection and auto-RESET in the event of overload in one device
- MSP for starter combinations (3RV23)

  Short-circuit protection only

  Combined with solid-state overload relay, large setting ranges and auto-RESET
- MSP for transformer protection (3RV24)

  Standard version for transformers
- Circuit breakers in accordance with UL489 (3RV27/3RV28)
  Overload protection, short-circuit protection, and transformer protection
- Circuit breaker for fuse monitoring (3RV1611-0BD10)
- Voltage transformer circuit breakers for distance protection (3RV1611-1.G14)

Sizes

3RV1 motor starter protectors are available in size S00 (45 mm width) up to a maximum rated current of 12 A. 3RV2 motor starter protectors are available in four sizes, S00, S0, S2 and S3.

The table below lists the sizes and the corresponding maximum rated current at a voltage of 400 V AC. The last column of the table indicates the maximum power of the three-phase motor which is suitable for the relevant size.

Table 4- 1 Size of the 3RV2 motor starter protector

Size	Width	Max. rated current	Power of three-phase motor
S00	45 mm[1)]	16 A	7.5 kW
S0	45 mm[1)]	40 A[2)]	18.5 kW
S2	55 mm[3)]	80 A	37 kW
S3	70 mm[4)]	100 A	45 kW / 55 kW

1) 3RV211, 3RV212: 65 mm

2) 3RV20 and 3RV23 only

3) 3RV213: 75 mm

4) 3RV214: 90 mm

Number of poles

3RV motor starter protectors have 3 poles.

4.3 Applications

General

3RV motor starter protectors are used for protecting and switching the following loads:

- Three-phase motors up to 45 kW / 55 kW at 400 V AC
- Loads with rated currents up to 100 A

Special applications

The various 3RV motor starter protectors are suitable for:

- Short-circuit protection
- Motor protection (also with overload relay function)
- System protection (3RV20..-.....-0DA0)
- Short-circuit protection for starter combinations
- Transformer protection
- As main and EMERGENCY OFF switches
- Use in IT systems
- Hazardous areas (ATEX and IECEx)
- Use as Branch Circuit Protection Device (BCPD) according to UL (3RV27/28)
- Circuit breaker for fuse monitoring (3RV1611-0BD10)
- Use as voltage transformer circuit breakers for distance protection (3RV1611-1.G14)

Reference

More information ...	Can be found in the chapter titled ...
About application areas	Configuration (Page 53)

4.4 Motor starter protectors

3RV1 motor starter protectors (size S00)

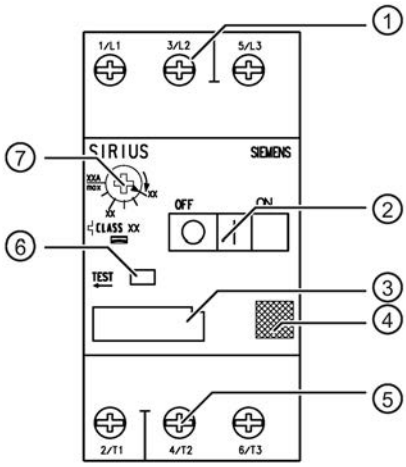

① Terminals: Up to two conductors with different cross-sections can be connected for the main and auxiliary circuits. Connection of the main circuit is possible with size S00 devices with screw-type connection technology. In the case of size S00 devices, the auxiliary circuit can be connected using screw terminals and spring-loaded terminals.

② Toggle switch: For switching on and off; with integrated locking device. Switching on and off must be executed quickly and without interruption.

③ Label

④ Data Matrix code

⑤ Connection for mounting contactors in various connection systems:

- Direct mounting using link modules
- Separately using connecting cables

⑥ TEST function: Enables testing of the release mechanism.

⑦ Motor current setting: The large rotary knob provides an easy means of setting the device to the rated motor current.

Figure 4-1 Equipment features of 3RV1 motor starter protectors

A sealable transparent cover can be optionally mounted (accessory). It prevents tampering with the motor setting.

Terminal labels and notes on the protection of device connections

1/L1 3/L2 5/L3 2/T1 4/T2 6/T3	Main circuit terminals	The specifications for short-circuit protection (fuses or miniature circuit breakers) are available for the device connections of the main circuit and the auxiliary circuit. You can find technical specifications of the product in the Siemens Industry Online Support (https://support.industry.siemens.com/cs/ww/en/ps/16244/td). The line protection of the main circuit on the load side is implemented by the circuit breaker without an additional protective device. In the main circuit on the line side and in auxiliary circuits and control circuits, line protection must be considered in line with the configuration standards.

3RV2 motor starter protectors (size S00 and S0)

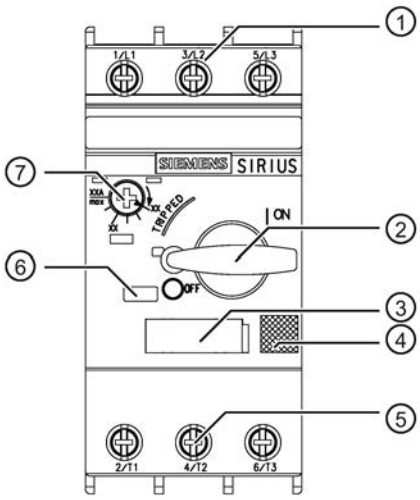

① Terminals: Up to two conductors with different cross-sections can be connected for the main and auxiliary circuits. Connection of the main circuit is possible with size S00 and S0 devices with screw-type and spring-loaded connection systems. Connection of the auxiliary circuit is possible with size S00 and S0 devices with screw-type and spring-loaded connection systems.

② Rotary operating mechanism: For switching on and off; display of a possible trip; with integrated locking device. Switching on and off must be executed quickly and without interruption.

③ Label

④ Data Matrix code

⑤ Connection for mounting contactors, solid-state contactors, and soft starters in various connection systems:

- Direct mounting using link modules
- Separately using connecting cables

⑥ TEST function: Enables testing of the release mechanism.

⑦ Motor current setting: The large rotary knob provides an easy means of setting the device to the rated motor current.

Figure 4-2 Features of 3RV2.1/3RV2.2 motor starter protectors

A sealable transparent cover can be optionally mounted (accessory). The cover prevents the motor setting being adjusted (this option is not available for 3RV23/3RV27/3RV28).

Terminal labels and notes on the protection of device connections

<table>
<tr><td>1/L1</td><td rowspan="6">Main circuit terminals</td><td rowspan="9">The specifications for short-circuit protection (fuses or miniature circuit breakers) are available for the device connections of the main circuit and the auxiliary circuit.
You can find technical specifications of the product in the Siemens Industry Online Support (https://support.industry.siemens.com/cs/ww/en/ps/16244/td).
The line protection of the main circuit on the load side is implemented by the circuit breaker without an additional protective device. In the main circuit on the line side and in auxiliary circuits and control circuits, line protection must be considered in line with the configuration standards.</td></tr>
<tr><td>3/L2</td></tr>
<tr><td>5/L3</td></tr>
<tr><td>2/T1</td></tr>
<tr><td>4/T2</td></tr>
<tr><td>6/T3</td></tr>
<tr><td>95</td><td rowspan="2">Relay function
NC contact
(NC 95-96)</td></tr>
<tr><td>96</td></tr>
<tr><td>97</td><td rowspan="2">Relay function
NO contact
(NO 97-98)</td></tr>
<tr><td>98</td></tr>
</table>

3RV2.3 motor starter protectors (size S2)

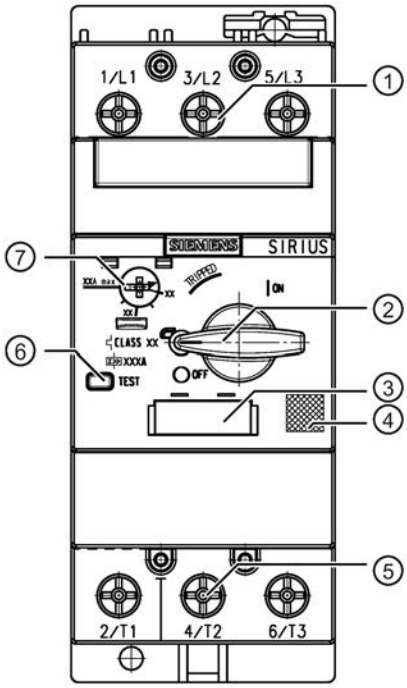

① Terminals: Up to two conductors with different cross-sections can be connected for the main and auxiliary circuits. Connection of the main circuit is possible with size S2 devices with a screw-type connection system. In the case of size S2 devices, the auxiliary circuit can be connected using either screw-type or spring-loaded connection systems.

② Rotary operating mechanism: For switching on and off; display of a possible trip; with integrated locking device. Switching on and off must be executed quickly and without interruption.

③ Label

④ Data Matrix code

⑤ Connection for mounting contactors and soft starters in various connection systems:

- Direct mounting using link modules
- Separately using connecting cables

⑥ TEST function: Enables testing of the release mechanism.

⑦ Motor current setting: The large rotary knob provides an easy means of setting the device to the rated motor current.

Figure 4-3 Features of 3RV2.3 motor starter protectors

A sealable transparent cover can be optionally mounted (accessory). The cover prevents the motor setting being adjusted (this option is not available for 3RV23).

Terminal labels and notes on the protection of device connections

<table>
<tr><td>1/L1</td><td rowspan="6">Main circuit terminals</td><td rowspan="9">The specifications for short-circuit protection (fuses or miniature circuit breakers) are available for the device connections of the main circuit and the auxiliary circuit.
You can find technical specifications of the product in the Siemens Industry Online Support (https://support.industry.siemens.com/cs/ww/en/ps/16244/td).
The line protection of the main circuit on the load side is implemented by the circuit breaker without an additional protective device. In the main circuit on the line side and in auxiliary circuits and control circuits, line protection must be considered in line with the configuration standards.</td></tr>
<tr><td>3/L2</td></tr>
<tr><td>5/L3</td></tr>
<tr><td>2/T1</td></tr>
<tr><td>4/T2</td></tr>
<tr><td>6/T3</td></tr>
<tr><td>95</td><td rowspan="2">Relay function
NC contact
(NC 95-96)</td></tr>
<tr><td>96</td></tr>
<tr><td>97</td><td rowspan="2">Relay function
NO contact
(NO 97-98)</td></tr>
<tr><td>98</td></tr>
</table>

3RV2.4 motor starter protectors (size S3)

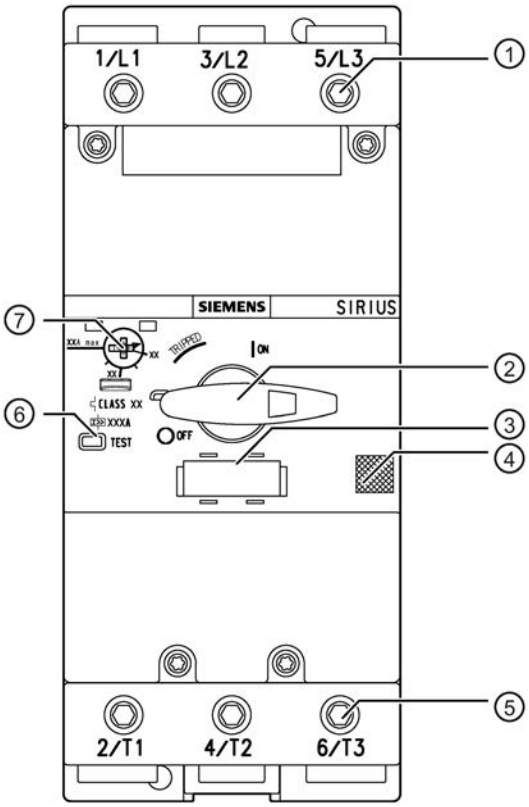

① Terminals: Up to two conductors with different cross-sections can be connected for the main and auxiliary circuits. Connection of the main circuit is possible with size S3 devices with screw-type and ring cable lug connection systems (after removing the box terminal block). In the case of size S3 devices, the auxiliary circuit can be connected using either screw-type or spring-loaded connection systems.

② Rotary operating mechanism: For switching on and off; display of a possible trip; with integrated locking device. Switching on and off must be executed quickly and without interruption.

③ Label

④ Data Matrix code

⑤ Connection for mounting contactors and soft starters in various connection systems:

- Direct mounting using link modules
- Separately using connecting cables

⑥ TEST function: Enables testing of the release mechanism.

⑦ Motor current setting: The large rotary knob provides an easy means of setting the device to the rated motor current.

Figure 4-4 Equipment features of 3RV2.4 motor starter protectors

A sealable transparent cover can be optionally mounted (accessory). The cover prevents adjustment of the motor setting (this option is not available for 3RV23 and 3RV27).

Terminal labels and notes on the protection of device connections

<table>
<tr><td>1/L1</td><td rowspan="6">Main circuit terminals</td><td rowspan="9">The specifications for short-circuit protection (fuses or miniature circuit breakers) are available for the device connections of the main circuit and the auxiliary circuit.
You can find technical specifications of the product in the Siemens Industry Online Support (https://support.industry.siemens.com/cs/ww/en/ps/16244/td).
The line protection of the main circuit on the load side is implemented by the circuit breaker without an additional protective device. In the main circuit on the line side and in auxiliary circuits and control circuits, line protection must be considered in line with the configuration standards.</td></tr>
<tr><td>3/L2</td></tr>
<tr><td>5/L3</td></tr>
<tr><td>2/T1</td></tr>
<tr><td>4/T2</td></tr>
<tr><td>6/T3</td></tr>
<tr><td>95</td><td rowspan="2">Relay function
NC contact
(NC 95-96)</td></tr>
<tr><td>96</td></tr>
<tr><td>97</td><td rowspan="2">Relay function
NO contact
(NO 97-98)</td></tr>
<tr><td>98</td></tr>
</table>

4.5 Performance features

SIRIUS motor starter protectors boast the following technical advantages:

Technical highlights	Customer benefits
Up to 20% less power consumption than previous solutions	• Reduced temperature rise in the control cabinet • Cost savings during operation
Uniform connection systems: • Screw-type connection system (sizes S00, S0, S2, and S3) • Spring-loaded connection (sizes S00[3], S0, S2[1], and S3[1]) • Ring cable lug-type connection (size S3[4])	The right connection for every application (e.g. operational reliability (vibration-resistant, non-temperature-specific, etc.) and less wiring thanks to spring-loaded connection system)
Link modules for any device combination from the SIRIUS modular system	Fast, error-free installation for screw-type and spring-loaded connection systems
• Motor starter protectors up to 40 A (18.5 kW) in 45 mm width • Motor starter protectors up to 80 A (37 kW) in 55 mm width • Motor starter protectors up to 100 A (55 kW) in 70 mm width	Space and cost savings
Motor starter protector combined with undervoltage release and contactor can be used as a Cat. 3 feeder in accordance with EN 951-1, SIL 2 in accordance with IEC 62061 or PL d 13849-1	Safety solution can be implemented with just one switching device
Factory-fitted integrated auxiliary switches (optional)	Reduced installation complexity
Joint range of accessories for sizes S00, S0, S2 and S3[6]	Easy to configure, reduced stockkeeping
Current values graded in accordance with all standard motors	• The right motor starter protector for every standard motor • Integrated protection even for ambient temperatures > 60 °C (with derating)
Bimetals with extreme long-term stability	Operational reliability over many years
Compatible for use in all infeed systems (3-phase busbars[5], 3RA6[2], 3RV29 infeed[2], 8US)	Maximum flexibility in terms of power infeed

1) In the case of size S2 and S3 devices, only connection of the auxiliary circuit is possible using spring-type terminals.

2) Only for devices of size S00 and S0.

3) Not applicable to 3RV1 motor starter protectors.

4) On devices of size S3, the terminal blocks of the main current connectors can be removed and conductors with ring cable lugs can be connected.

5) Only for devices of size S00, S0 and S2.

6) Not applicable to 3RV1 motor starter protectors.

Product combinations

5

Since the products from the innovative SIRIUS modular system are matched to one another both electrically and mechanically, they can be combined quickly and easily.

Typical combinations for fuseless and fused designs have been fully tested and approved.

Reference

More information ...	Can be found in the appendix ...
About the possible combinations of standard products from the SIRIUS modular system	"References" under "Manuals - SIRIUS Modular System (Page 280)"

Functions

6

3RV motor starter protectors meet the requirements for motor and system protection according to IEC 60947-2 / DIN VDE 0660-101.

Motor and system protection is achieved using the following functions:

- Overload protection
- Short-circuit protection
- Phase loss sensitivity

6.1 Overload and short-circuit protection

Overload protection

The rated current of the motor requiring protection (see rating plate) is set on the setting scale. This sets the integrated overload protection to the motor current.

Short-circuit protection

The short-circuit release is factory-set to a multiple of the motor starter protector's rated current (top value on the setting scale). The response value of the short-circuit release (in A) is lasered onto the front of the device. This ensures problem-free ramping-up and safe protection for the motor.

Release

3RV motor starter protectors are fitted with the following releases:

- Inverse-time delayed thermal overload release (exception: 3RV23)
  The overload releases can be set on the load feeder (exception: 3RV16, 3RV27 and 3RV28 circuit breakers).
- Instantaneous short-circuit release

Note

Motor starter protectors for transformer protection

The short-circuit releases of motor starter protectors for transformer protection (3RV24, 3RV28) are set to a higher value than in the case of the 3RV20 motor starter protectors. This avoids unintentional releases otherwise caused by high inrush currents. The response value of the short-circuit release (in A) is lasered onto the front of the device.

6.1.1 Tripping classes

3RV10 / 3RV20 / 3RV21 motor starter protectors conform to CLASS 10 according to IEC 60947-4-1. Some size S2 and S3 3RV20 motor starter protector variants fulfill CLASS 20.

The tripping times according to IEC 60947-4-1 are as follows:

Table 6- 1 Tripping times dependent upon tripping classes according to standard IEC 60947-4-1

Tripping class	**Tripping time t_A in s at 7.2 x I_e from cold**
CLASS 10 A	$2 < t_A \leq 10$
CLASS 10	$4 < t_A \leq 10$
CLASS 20	$6 < t_A \leq 20$
CLASS 30	$9 < t_A \leq 30$

6.1.2 Tripping characteristics

The time-current characteristic, the current-limiting characteristics, and the I^2t characteristics have been determined according to DIN VDE 0660/IEC 60947.

In the case of the time-current characteristic, the tripping characteristic of the inverse-time delayed overload release (thermal overload release) applies for alternating current with frequencies from 0 Hz up to 400 Hz.

The characteristics apply to the cold state; at operating temperature, the tripping times of the thermal releases drop to approximately 25%.

In normal operation the device must be loaded at 3 poles. To protect single-phase loads, all 3 main current paths must be connected in series.

With both 2- and 3-pole loading, the maximum deviation of the tripping times at and above 3 times the current setting is ± 20% and thus meets the requirements of DIN VDE 0165.

The tripping characteristics for the instantaneous, electromagnetic overcurrent releases (short-circuit releases, 'n' releases) are based on the rated current I_n that is also the upper value of the setting range for motor starter protectors with adjustable overcurrent releases. If the current is set to a lower value the tripping current of the 'n' release is increased by a correspondingly higher multiple.

Frequency dependence of the short-circuit release

The characteristics of the electromagnetic overcurrent release apply for frequencies of 50 Hz/60 Hz. For lower frequencies up to 16 2/3 Hz, for higher frequencies up to 400 Hz, and for direct current, correction factors have to be taken into account accordingly.

The following characteristic curve shows the frequency dependence of the short-circuit release.

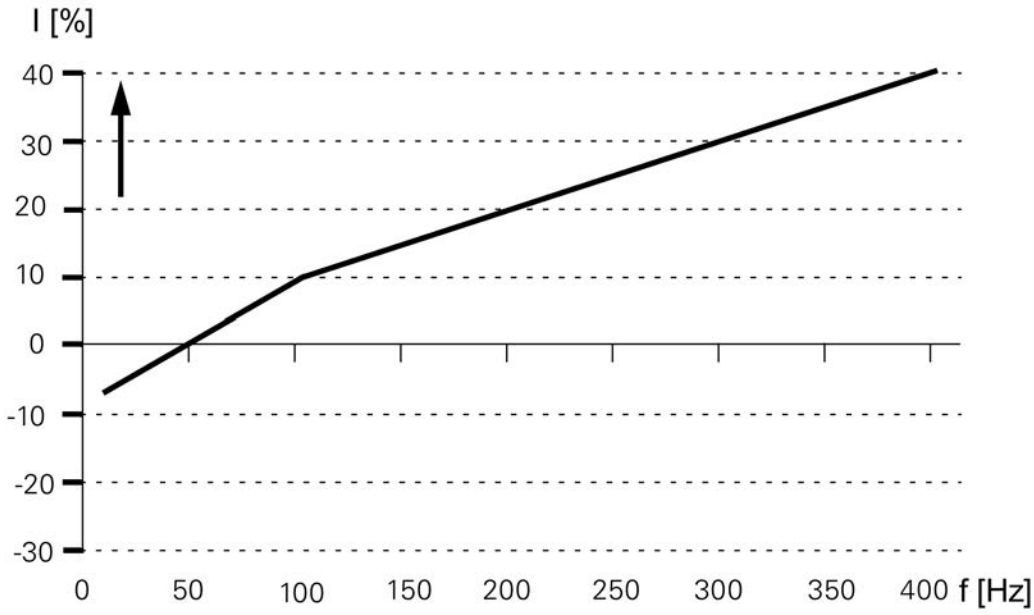

Δ I Change in operating current

f Frequency

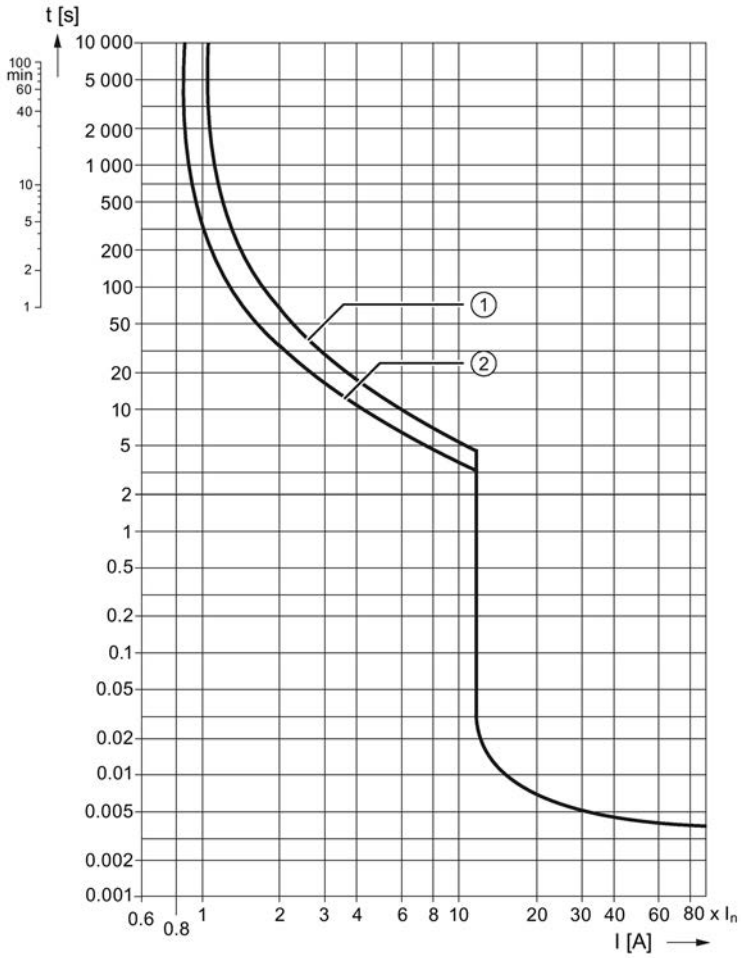

t Tripping time

I Multiple of current setting

① 3-pole load CLASS 10

② 2-pole load CLASS 10

Figure 6-1 Schematic circuit diagram of the time-current characteristic curve for 3RV20

The characteristic curve reproduced above for the motor starter protector relates to a specific setting range. It is, however, also valid as a schematic circuit diagram for motor starter protectors with other current ranges.

Reference

Time-current characteristics, current-limiting characteristics and I^2t characteristics can be found on the Internet (https://support.industry.siemens.com/cs/ww/en/ps/16027/char).

6.2 Phase loss sensitivity

The phase loss sensitivity (not in the case of 3RV20..-.....-0DA0, 3RV23, 3RV27 and 3RV28) of the motor starter protector ensures that it trips in good time in the event of a phase failure or significant phase unbalance. The motor starter protector tripping prevents overcurrents from occurring in the remaining phases.

6.3 Protection of single-phase loads

The 3RV20..-.....-0DA0 motor starter protectors for system protection and 3RV27 / 3RV28 circuit breakers according to UL 489 do not feature phase asymmetry detection. Therefore these devices can be used for the protection of single-phase or two-phase loads. The 3RV20..-.....-0DA0 motor starter protectors for system protection do not have UL approval. For applications according to UL 489, Circuit Breaker 3RV27 / 3RV28 are suitable.

All other motor starter protectors (3RV1011, 3RV20, 3RV21 and 3RV24) are loaded with three poles in normal operation. To protect single-phase loads, with these devices all 3 main current paths must be connected in series.

6.4 Test function

The TEST slide / TEST pushbutton can be used to check whether the operational motor starter protector is working correctly (not on the 3RV23 / 3RV27 / 3RV28 circuit breakers in sizes S00 and S0). The tripping of the motor starter protector can be simulated by operating the slide / pushbutton.

Configuration

7

7.1 Performance features

Table 7- 1 Performance features of 3RV1 motor starter protectors

Feature		3RV10	3RV1611-0BD10	3RV1611-1.G14
Applications				
• System protection		✓[1]	--	--
• Motor protection		✓	--	--
• Fuse monitoring		--	✓	--
• Voltage transformer circuit breakers for distance protection		--	--	✓
Size		S00	S00	S00
Rated current I_n				
• Size S00	A	Up to 12	0.2	Up to 3
Rated operational voltage V_e acc. to IEC	V	690 AC[2]	690 AC[2]	AC 400
Rated frequency	Hz	50 / 60	50 / 60	16×2/3 / 60
Trip class		CLASS 10	CLASS 10	--
Thermal overload releases	A	0.11 ... 0.16	0.2	1.4 ... 3
Overcurrent release Multiple of the rated current		13 times	6 times	4 ... 7 times
Short-circuit breaking capacity I_{cu} at 400 V AC	kA	100	100	50

✓ = Supports this function

-- = Does not support this function

1) If all 3 phases are under symmetrical load

2) With molded-plastic enclosure 500 V AC

Table 7- 2 Performance features of 3RV2 motor starter protectors

Feature		3RV20	3RV21	3RV23	3RV24	3RV27	3RV28
Applications							
• System protection		✓[1]	✓[1]	--	--	✓	✓
• Motor protection		✓	--	--	--	--	--
• Motor protection with overload relay function		--	✓	--	--	--	--
• Starter combinations		--	--	✓	--	--	--
• Transformer protection		--	--	--	✓	--	✓
Size		S00, S0, S2, S3	S00, S0, S2, S3	S00, S0, S2, S3	S00, S0, S2	S00, S0, S3	S00, S0
Rated current I_n							
• Size S00	A	Up to 16	Up to 16	Up to 16	Up to 16	Up to 15	Up to 15
• Size S0	A	Up to 40	Up to 32	Up to 40	Up to 25	Up to 22	Up to 22
• Size S2	A	Up to 80	Up to 80	Up to 80	Up to 65	--	--
• Size S3	A	Up to 100	Up to 100	Up to 100	--	Up to 70	--
Rated operational voltage U_e acc. to IEC	V	690 AC[2]	690 AC[2]	690 AC[2]	690 AC[2]	AC 690	AC 690
Rated frequency	Hz	50 / 60	50 / 60	50 / 60	50 / 60	50 / 60	50 / 60
Tripping class		CLASS 10 (S00 ... S3), CLASS 20 (S2, S3)	CLASS 10	--	CLASS 10	--	--
Thermal overload release	A	0.11 ... 0.16 to 80 ... 100	0.11 ... 0.16 to 80 ... 100	Without[3]	0.11 to 0.16 to 54 to 65	S00, S0: 0.16 ... 22 fixed setting S3: 10 ... 70 fixed setting	0.16 to 22 fixed setting
Overcurrent release Multiple of the rated current		13x	13x	13x	20x	13x	20x
Short-circuit breaking capacity I_{cu} at 400 V AC	kA	20 / 55 / 65 100	55 / 65 / 100	20 / 55 / 65 / 100	55 / 65 / 100	[4]	[4]

✓ = Supports this function

-- = Does not support this function

[1] If all 3 phases are under symmetrical load

[2] With molded-plastic enclosure and cast aluminum enclosure: 500 V AC

[3] Appropriate overload relays must be provided for motor overload protection

[4] Acc. to UL 489 at 480 V/277 V AC: 65 kA

7.2 TIA Selection Tool

You can select, configure and order devices for Totally Integrated Automation (TIA) with the TIA Selection Tool.

You will find the TIA Selection Tool on the Internet (http://www.siemens.com/tst).

7.3 Short-circuit protection

The short-circuit releases on 3RV2 motor starter protectors isolate the load from the supply system (three phases) in the event of a short circuit, thereby preventing further damage.

With a short-circuit breaking capacity of 50 kA, 55 kA, 65 kA or 100 kA in the case of a voltage of 400 V AC, the motor starter protectors count as short-circuit-proof as long as higher short-circuit currents are not anticipated at their installation location.

Backup fuses are only necessary if the short-circuit current at the installation location exceeds the motor starter protectors' short-circuit breaking capacity.

The short-circuit breaking capacity in the case of different voltages and the dimensioning of a fuse (if it is required) are described in the Siemens Industry Online Support (https://support.industry.siemens.com/cs/ww/en/ps/16244/td).

7.3.1 Short-circuit breaking capacity

7.3.1.1 Short-circuit breaking capacity for motor starter protectors

Short-circuit breaking capacity I_{cu}, I_{cs} acc. to IEC 60947-2

The tables list the rated ultimate short-circuit breaking capacity I_{cu} and the rated service short-circuit breaking capacity I_{cs} for 3RV2 motor starter protectors at different operating voltages dependent on the rated current I_n of the protectors.

Power can be fed in to the motor starter protectors via the terminals at the top or at the bottom without restricting the rated data. If the short-circuit current at the place of installation exceeds the rated short-circuit breaking capacity of the motor starter protector specified in the tables, a back-up fuse is required. It is also possible to install an upstream motor starter protector with a limiter function.

The maximum rated current of this back-up fuse is indicated in the tables. The rated ultimate short-circuit breaking capacity then applies as specified on the fuse.

Table 7- 3 Short-circuit breaking capacity I_{CU}, I_{CS} acc. to IEC 60947-2 - Part 1 - Size S00

Motor starter protector	Rated current I_n	Up to 240 V AC[1]			Up to 400 V AC[1] / 415 V AC[2]		
		Icu	Ics	Max. fuse (gG)	Icu	Ics	Max. fuse (gG)[3]
Type	A	kA	kA	A	kA	kA	A
Size S00							
3RV2.11	0.16 ... 1.6	100	100	--	100	100	-
	2	100	100	--	100	100	-
	2.5	100	100	--	100	100	-
	3.2	100	100	--	100	100	-
	4	100	100	--	100	100	-
	5	100	100	--	100	100	-
	6.3	100	100	--	100	100	-
	8	100	100	--	100	100	-
	10	100	100	--	100	100	-
	12.5	100	100	--	100	100	-
	16	100	100	--	55	30	100
3RV1611 -0BD10	0.2	100	100	--	100	100	--

--- No back-up fuse required, because short-circuit-proof up to 100 kA.

1) 10% overvoltage

2) 5% overvoltage

3) Fuse only required if short-circuit current at installation location is > I_{CU}

Table 7- 4 Short-circuit breaking capacity I_{CU}, I_{CS} acc. to IEC 60947-2 - Part 2 - Size S00

Motor starter protector	Rated current I_n	Up to 440 V AC[1] / 460 V AC[2]			Up to 500 V AC[1] / 525 V AC[2]			Up to 690 V AC[1]		
		I_{cu}	I_{cs}	Max. fuse (gG)[3]	I_{cu}	I_{cs}	Max. fuse (gG)[3]	I_{cu}	I_{cs}	Max. fuse (gG)[3][4]
Type	**A**	**kA**	**kA**	**A**	**kA**	**kA**	**A**	**kA**	**kA**	**A**
Size S00										
3RV2.11	0.16 ... 1.6	100	100	--	100	100	--	100	100	--
	2	100	100	--	100	100	--	10	10	25
	2.5	100	100	--	100	100	--	10	10	25
	3.2	100	100	--	100	100	--	10	10	32
	4	100	100	--	100	100	--	6	4	32
	5	100	100	--	100	100	--	6	4	32
	6.3	100	100	--	100	100	--	6	4	50
	8	50	50	63	42	42	63	6	4	50
	10	50	50	80	42	42	63	6	4	50
	12.5	50	50	80	42	42	80	6	4	63
	16	50	12.5	80	10	5	80	4	4	63
3RV1611-0BD10	0.2	100	100	--	100	100	--	100	100	--

-- No back-up fuse required, because short-circuit-proof up to 100 kA.

1) 10% overvoltage

2) 5% overvoltage

3) Back-up fuse only required if short-circuit current at installation location is > I_{CU}

4) Alternatively, fuseless limiter combinations can be used for 690 V AC.

Table 7- 5 Short-circuit breaking capacity I_{CU}, I_{CS} acc. to IEC 60947-2 - Part 1 - Size S0

Motor starter protector	Rated current I_n	Up to 240 V AC[1]			Up to 400 V AC[1] / 415 V AC[2]		
		Icu	Ics	Max. fuse (gG)	Icu	Ics	Max. fuse (gG)[3]
Type	**A**	**kA**	**kA**	**A**	**kA**	**kA**	**A**
Size S0							
3RV2.21	0.16 ... 1.6	100	100	--	100	100	--
	2	100	100	--	100	100	--
	2.5	100	100	--	100	100	--
	3.2	100	100	--	100	100	--
	4	100	100	--	100	100	--
	5	100	100	--	100	100	--
	6.3	100	100	--	100	100	--
	8	100	100	--	100	100	--
	10	100	100	--	100	100	--
	12.5	100	100	--	100	100	--
	16	100	100	--	55	25	100
	20	100	100	--	55	25	125
	22	100	100	--	55	25	125
	25	100	100	--	55	25	125
	28	100	100	--	55	25	125
	32	100	100	--	55	25	125
	36	100	100	--	20	10	125
	40	100	100	--	20	10	125

-- No back-up fuse required, because short-circuit-proof up to 100 kA.

1) 10% overvoltage

2) 5% overvoltage

3) Fuse only required if short-circuit current at installation location is > I_{CU}

Table 7- 6 Short-circuit breaking capacity I_{CU}, I_{CS} acc. to IEC 60947-2 - Part 2 - Size S0

Motor starter protector	Rated current I_n	Up to 440 V AC[1] / 460 V AC[2]			Up to 500 V AC[1] / 525 V AC[2]			Up to 690 V AC[1]		
		I_{cu}	I_{cs}	Max. fuse (gG)[3]	I_{cu}	I_{cs}	Max. fuse (gG)[3]	I_{cu}	I_{cs}	Max. fuse (gG)[3][4]
Type	**A**	**kA**	**kA**	**A**	**kA**	**kA**	**A**	**kA**	**kA**	**A**
Size S0										
3RV2.21	0.16 ... 1.6	100	100	--	100	100	--	100	100	--
	2	100	100	--	100	100	--	10	10	25
	2.5	100	100	--	100	100	--	10	10	25
	3.2	100	100	--	100	100	--	10	10	32
	4	100	100	--	100	100	--	6	4	32
	5	100	100	--	100	100	--	6	4	32
	6.3	100	100	--	100	100	--	6	4	50
	8	50	50	63	42	42	63	6	4	50
	10	50	50	80	42	42	63	6	4	50
	12.5	50	50	80	42	42	80	6	4	63
	16	50	12.5	80	10	5	80	4	2	63
	20	50	10	80	10	5	80	4	2	63
	22	50	10	100	10	5	80	4	2	63
	25	50	10	100	10	5	80	4	2	63
	28	30	10	125	10	5	100	4	2	100
	32	30	10	125	10	5	100	4	2	100
	36	12	8	125	6	3	100	3	2	100
	40	12	8	125	6	3	100	3	2	100

-- No back-up fuse required, because short-circuit-proof up to 100 kA.

1) 10% overvoltage

2) 5% overvoltage

3) Back-up fuse only required if short-circuit current at installation location is > I_{CU}

4) Alternatively, fuseless limiter combinations can be used for 690 V AC.

Table 7- 7 Short-circuit breaking capacity I_{CU}, I_{CS} acc. to IEC 60947-2 - Part 1 - Size S2

Motor starter protector	Rated current I_n	Up to 240 V AC[1]			Up to 400 V AC[1] / 415 V AC[2]		
		Icu	Ics	Max. fuse (gG)	Icu	Ics	Max. fuse (gG)[3]
Type	**A**	**kA**	**kA**	**A**	**kA**	**kA**	**A**
Size S2							
3RV2.31	14; 17	100	100	--	65	30	100
	20	100	100	--	65	30	100
	25	100	100	--	65	30	100
	32; 36	100	100	--	65	30	125
	40; 45	100	100	--	65	30	160
	52	100	100	--	65	30	160
	59; 65	100	100	--	65	30	160
	73; 80	100	100	--	65	30	200
Size S2, with increased breaking capacity							
3RV2.32	14; 17	100	100	--	100	50	--
	20; 25	100	100	--	100	50	--
	32 ... 45	100	100	--	100	50	--
	52	100	100	--	100	50	--
	59; 65	100	100	--	100	50	--
	73; 80	100	100	--	100	50	--

-- No back-up fuse required, because short-circuit-proof up to 100 kA.

1) 10% overvoltage

2) 5% overvoltage

3) Back-up fuse only required if short-circuit current at installation location is > I_{CU}

Table 7- 8 Short-circuit breaking capacity I_{CU}, I_{CS} acc. to IEC 60947-2 - Part 2 - Size S2

Motor starter protector	Rated current I_n	Up to 440 V AC[1] / 460 V AC[2]			Up to 500 V AC[1] / 525 V AC[2]			Up to 690 V AC[1]		
		I_{cu}	I_{cs}	Max. fuse (gG)[3]	I_{cu}	I_{cs}	Max. fuse (gG)[3]	I_{cu}	I_{cs}	Max. fuse (gG)[3][4]
Type	**A**	**kA**	**kA**	**A**	**kA**	**kA**	**A**	**kA**	**kA**	**A**
Size S2										
3RV2.31	14; 17	50	25	100	12	6	63	5	3	63
	20	50	25	100	12	6	80	5	3	80
	25	50	15	100	12	6	80	5	3	80
	32; 36	50	15	125	10	5	100	4	2	100
	40; 45	50	15	125	10	5	100	4	2	100
	52	50	15	125	10	5	125	4	2	125
	59; 65	50	15	160	8	4	125	4	2	125
	73; 80	50	15	200	8	4	160	4	2	125
Size S2, with increased breaking capacity										
3RV2.32	14; 17	65	30	100	18	10	63	8	5	63
	20; 25	65	30	100	18	10	80	8	5	80
	32 ... 45	65	30	125	15	8	100	6	4	100
	52	65	30	125	15	8	125	6	4	125
	59; 65	50	15	160	10	5	125	6	4	125
	73; 80	50	15	200	10	5	160	6	4	125

--- No back-up fuse required, because short-circuit-proof up to 100 kA.

1) 10% overvoltage

2) 5% overvoltage

3) Back-up fuse only required if short-circuit current at installation location is > I_{CU}

4) Alternatively, fuseless limiter combinations can be used for 690 V AC.

Table 7- 9 Short-circuit breaking capacity I_{CU}, I_{CS} acc. to IEC 60947-2 - Part 1 - Size S3

Motor starter protector	Rated current I_n	Up to 240 V AC[1]			Up to 400 V AC[1] / 415 V AC[2]		
		Icu	Ics	Max. fuse (gG)	Icu	Ics	Max. fuse (gG)[3]
Type	**A**	**kA**	**kA**	**A**	**kA**	**kA**	**A**
Size S3							
3RV2.41	40	100	100	--	65	30	125
	50	100	100	--	65	30	125
	63	100	100	--	65	30	160
	75	100	100	--	65	30	160
	84 ... 100	100	100	--	65	30	160
Size S3, with increased breaking capacity							
3RV2.42	40	100	100	--	100	50	--
	50	100	100	--	100	50	--
	63	100	100	--	100	50	--
	75	100	100	--	100	50	--
	84 ... 100	100	100	--	100	50	--
3RV2742 [4]	up to 70 A	100	100	--	100	50	--

-- No back-up fuse required, because short-circuit-proof up to 100 kA.

1) 10% overvoltage

2) 5% overvoltage

3) Back-up fuse only required if short-circuit current at installation location is > I_{CU}

4) The values for the 3RV2742 motor starter protector have been tested only up to 400 V/415 V AC.

Table 7- 10 Short-circuit breaking capacity I_{CU}, I_{CS} acc. to IEC 60947-2 - Part 2 - Size S3

Motor starter protector	Rated current I_n	Up to 440 V AC[1] / 460 V AC[2]			Up to 500 V AC[1] / 525 V AC[2]			Up to 690 V AC[1]		
		I_{cu}	I_{cs}	Max. fuse (gG)[3]	I_{cu}	I_{cs}	Max. fuse (gG)[3]	I_{cu}	I_{cs}	Max. fuse (gG)[3][4]
Type	**A**	**kA**	**kA**	**A**	**kA**	**kA**	**A**	**kA**	**kA**	**A**
Size S3										
3RV2.41	40	65	30	125	12	6	100	6	3	63
	50	65	30	125	12	6	100	6	3	80
	63	65	30	160	12	6	100	6	3	80
	75	65	30	160	8	4	125	5	3	100
	84 ... 100	65	30	160	8	4	125	5	3	125
Size S3, with increased breaking capacity										
3RV2.42	40	100	50	--	18	9	160	12	6	80
	50	100	50	--	15	7.5	160	10	5	100
	63	70	50	200	15	7.5	160	7.5	4	100
	75	70	50	200	10	5	160	6	3	125
	84 ... 100	70	50	200	10	5	160	6	3	160
3RV2742 [5]	up to 70 A	On request								

--- No back-up fuse required, because short-circuit-proof up to 100 kA.

1) 10% overvoltage

2) 5% overvoltage

3) Back-up fuse only required if short-circuit current at installation location is > I_{CU}

4) Alternatively, fuseless limiter combinations can be used for 690 V AC.

5) The values for the 3RV2742 motor starter protector have been tested only up to 400 V/415 V AC.

7.3.1.2 Short-circuit breaking capacity for 3RV1.1 motor starter protectors in an enclosure

Short-circuit breaking capacity I_{cu}, I_{cs} according to IEC 60947-2 for 3RV1.1 motor starter protectors in an enclosure

The table lists the rated ultimate short-circuit breaking capacity I_{cu} and the rated service short-circuit breaking capacity I_{cs} for 3RV1.1 motor starter protectors in an enclosure at different operating voltages dependent on the rated current I_n of the protectors.

Power can be fed in to the motor starter protectors via the terminals at the top or at the bottom without restricting the rated data. If the short-circuit current at the place of installation exceeds the rated short-circuit breaking capacity of the motor starter protector specified in the tables, a back-up fuse is required. It is also possible to install an upstream motor starter protector with a limiter function.

The maximum rated current of this back-up fuse is indicated in the tables. The rated ultimate short-circuit breaking capacity then applies as specified on the fuse.

Table 7- 11 Short-circuit breaking capacity I_{cu}, I_{cs} according to IEC 60947-2 for 3RV1.1 motor starter protectors in **molded-plastic enclosure 3RV1913-1CA00 / 3RV1913-1DA00** - Part 1 - Size S00

Motor starter protector	Rated current I_n	Up to 240 V AC[1]			Up to 400 V AC[1] / 415 V AC[2]		
		Icu	Ics	Max. fuse (gG)	Icu	Ics	Max. fuse (gG)[3]
Type	A	kA	kA	A	kA	kA	A
Size S00							
3RV1.1	0.16 ... 1.6	100	100	--	100	100	-
	2	100	100	--	100	100	-
	2.5	100	100	--	100	100	-
	3.2 ... 5	100	100	--	100	100	-
	6.3	15	15	50	15	15	50
	8 ... 12	5	5	80	5	5	80

-- No back-up fuse required, because short-circuit-proof up to 100 kA.

1) 10% overvoltage

2) 5% overvoltage

3) Fuse only required if short-circuit current at installation location is > I_{CU}

Table 7- 12 Short-circuit breaking capacity I_{cu}, I_{cs} according to IEC 60947-2 for 3RV1.1 motor starter protectors in **molded-plastic enclosure 3RV1913-1CA00 / 3RV1913-1DA00** - Part 2 - Size S00

Motor starter protector	Rated current I_n	Up to 440 V AC[1] / 460 V AC[2]			Up to 500 V AC[1] / 525 V AC[2]		
		Icu	Ics	Max. fuse (gG)	Icu	Ics	Max. fuse (gG)[3]
Type	A	kA	kA	A	kA	kA	A
Size S00							
3RV1.1	0.16 ... 1.6	100	100	--	100	100	--
	2	10	10	35	10	10	35
	2.5	10	10	35	10	10	35
	3.2 ... 5	3	3	40	3	3	40
	6.3	3	3	50	3	3	50
	8 ... 12	3	3	63	3	3	63

-- No back-up fuse required, because short-circuit-proof up to 100 kA.

1) 10% overvoltage

2) 5% overvoltage

3) Fuse only required if short-circuit current at installation location is > I_{cu}

Table 7- 13 Short-circuit breaking capacity I_{cu}, I_{cs} according to IEC 60947-2 for 3RV1.1 motor starter protectors in **molded-plastic enclosure 3RV1913-2DA00** - Part 1 - Size S00

Motor starter protector	Rated current I_n	Up to 240 V AC[1]			Up to 400 V AC[1] / 415 V AC[2]		
		Icu	Ics	Max. fuse (gG)	Icu	Ics	Max. fuse (gG)[3]
Type	A	kA	kA	A	kA	kA	A
Size S00							
3RV1.1	0.16 ... 1.6	100	100	--	100	100	--
	2	100	100	--	100	100	--
	2.5	100	100	--	100	100	--
	3.2 ... 5	100	100	--	100	100	--
	6.3	100	100	--	100	100	--
	8 ... 12	10	10	63	10	10	63

-- No back-up fuse required, because short-circuit-proof up to 100 kA.

1) 10% overvoltage

2) 5% overvoltage

3) Fuse only required if short-circuit current at installation location is > I_{cu}

Table 7- 14 Short-circuit breaking capacity I_{cu}, I_{cs} according to IEC 60947-2 for 3RV1.1 motor starter protectors in **molded-plastic enclosure 3RV1913-2DA00** - Part 2 - Size S00

Motor starter protector	**Rated current I_n**	**Up to 440 V AC[1] / 460 V AC[2]**			**Up to 500 V AC[1] / 525 V AC[2]**		
		Icu	**Ics**	**Max. fuse (gG)**	**Icu**	**Ics**	**Max. fuse (gG)[3]**
Type	**A**	**kA**	**kA**	**A**	**kA**	**kA**	**A**
Size S00							
3RV1.1	0.16 ... 1.6	100	100	--	100	100	--
	2	10	10	35	10	10	35
	2.5	10	10	35	10	10	35
	3.2 ... 5	3	3	40	3	3	40
	6.3	3	3	50	3	3	50
	8 ... 12	3	3	63	3	3	63

-- No back-up fuse required, because short-circuit-proof up to 100 kA.

1) 10% overvoltage

2) 5% overvoltage

3) Fuse only required if short-circuit current at installation location is > I_{cu}

7.3.1.3 Short-circuit breaking capacity for 3RV2.1 and 3RV2.2 motor starter protectors in an enclosure

Short-circuit breaking capacity I_{cu}, I_{cs} according to IEC 60947-2 for 3RV2.1 and 3RV2.2 motor starter protectors in an enclosure

The tables list the rated ultimate short-circuit breaking capacity I_{cu} and the rated service short-circuit breaking capacity I_{cs} for 3RV2.1 and 3RV2.2 motor starter protectors in an enclosure at different operating voltages depending on the rated current I_n of the protectors.

Power can be fed in to the motor starter protectors via the terminals at the top or at the bottom without restricting the rated data. If the short-circuit current at the place of installation exceeds the rated short-circuit breaking capacity of the motor starter protector specified in the tables, a back-up fuse is required. It is also possible to install an upstream motor starter protector with a limiter function.

The maximum rated current of this back-up fuse is indicated in the tables. The rated ultimate short-circuit breaking capacity then applies as specified on the fuse.

Table 7- 15 Short-circuit breaking capacity I_{CU}, I_{CS} according to IEC 60947-2 for 3RV2.1 / 3RV2.2 motor starter protectors in **molded-plastic enclosure 3RV1923-1CA00 / 3RV1923-1FA00** - Part 1 - Size S00 / Size S0

Motor starter protector	Rated current I_n	Up to 240 V AC[1]			Up to 400 V AC[1] / 415 V AC[2]		
		Icu	Ics	Max. fuse (gG)	Icu	Ics	Max. fuse (gG)[3]
Type	**A**	**kA**	**kA**	**A**	**kA**	**kA**	**A**
Size S00 / Size S0							
3RV2.1 / 3RV2.2	0.16 ... 4.0	100	100	--	100	100	--
	5	5	5	25	5	5	25
	6.3	5	5	25	5	5	25
	8 ... 12.5	3	3	35	3	3	35
	16	2	2	40	2	2	40
Size S0							
3RV2.2	16	2	2	40	2	2	40
	20	2	2	40	2	2	40
	22	2	2	50	2	2	50
	25	2	2	50	2	2	50
	28	2	2	63	2	2	63
	32	2	2	63	2	2	63

--- No back-up fuse required, because short-circuit-proof up to 100 kA.

1) 10% overvoltage

2) 5% overvoltage

3) Fuse only required if short-circuit current at installation location is > I_{CU}

Table 7- 16 Short-circuit breaking capacity I_{CU}, I_{CS} according to IEC 60947-2 for 3RV2.1 / 3RV2.2 motor starter protectors in **molded-plastic enclosure 3RV1923-1CA00 / 3RV1923-1FA00** - Part 2 - Size S00 / Size S0

Motor starter protector	**Rated current I_n**	**Up to 440 V AC[1] / 460 V AC[2]**			**Up to 500 V AC[1] / 525 V AC[2]**		
		Icu	**Ics**	**Max. fuse (gG)**	**Icu**	**Ics**	**Max. fuse (gG)[3]**
Type	**A**	**kA**	**kA**	**A**	**kA**	**kA**	**A**
Size S00 / Size S0							
3RV2.1 / 3RV2.2	0.16 ... 4.0	100	100	--	100	100	--
	5	5	5	25	5	5	25
	6.3	5	5	25	5	5	25
	8 ... 12.5	3	3	35	3	3	35
	16	2	2	40	2	2	40
Size S0							
3RV2.2	16	2	2	40	2	2	40
	20	2	2	40	2	2	40
	22	2	2	50	2	2	50
	25	2	2	50	2	2	50
	28	2	2	63	2	2	63
	32	2	2	63	2	2	63

--- No back-up fuse required, because short-circuit-proof up to 100 kA.

1) 10% overvoltage

2) 5% overvoltage

3) Fuse only required if short-circuit current at installation location is > I_{CU}

Table 7- 17 Short-circuit breaking capacity I_{CU}, I_{CS} according to IEC 60947-2 for 3RV2.1 / 3RV2.2 motor starter protectors in **molded-plastic enclosure 3RV1923-1DA00 / 3RV1923-1GA00** - Part 1 - Size S00 / Size S0

Motor starter protector	Rated current I_n	Up to 240 V AC[1]			Up to 400 V AC[1] / 415 V AC[2]		
		Icu	Ics	Max. fuse (gG)	Icu	Ics	Max. fuse (gG)[3]
Type	**A**	**kA**	**kA**	**A**	**kA**	**kA**	**A**
Size S00 / Size S0							
3RV2.1 / 3RV2.2	0.16 ... 5.0	100	100	--	100	100	--
	6.3	10	10	25	10	10	25
	8	10	10	35	10	10	35
	10	6	6	35	6	6	35
	12.5	6	6	35	6	6	35
	16	4	4	40	4	4	40
Size S0							
3RV2.2	16	4	4	40	4	4	40
	20	4	4	40	4	4	40
	22	4	4	50	4	4	50
	25	4	4	50	4	4	50
	28	4	4	63	4	4	63
	32	4	4	63	4	4	63

--- No back-up fuse required, because short-circuit-proof up to 100 kA.

1) 10% overvoltage

2) 5% overvoltage

3) Fuse only required if short-circuit current at installation location is > I_{CU}

Table 7- 18 Short-circuit breaking capacity I_{CU}, I_{CS} according to IEC 60947-2 for 3RV2.1 / 3RV2.2 motor starter protectors in **molded-plastic enclosure 3RV1923-1DA00 / 3RV1923-1GA00** - Part 2 - Size S00 / Size S0

Motor starter protector	Rated current I_n	Up to 440 V AC[1] / 460 V AC[2]			Up to 500 V AC[1] / 525 V AC[2]		
		Icu	Ics	Max. fuse (gG)	Icu	Ics	Max. fuse (gG)[3]
Type	**A**	**kA**	**kA**	**A**	**kA**	**kA**	**A**
Size S00 / Size S0							
3RV2.1 / 3RV2.2	0.16 ... 5.0	100	100	--	100	100	--
	6.3	10	10	25	10	10	25
	8	10	10	35	10	10	35
	10	6	6	35	6	6	35
	12.5	6	6	35	6	6	35
	16	4	4	40	4	4	40
Size S0							
3RV2.2	16	4	4	40	4	4	40
	20	2	2	40	2	2	40
	22	2	2	50	2	2	50
	25	2	2	50	2	2	50
	28	2	2	63	2	2	63
	32	2	2	63	2	2	63

-- No back-up fuse required, because short-circuit-proof up to 100 kA.

1) 10% overvoltage

2) 5% overvoltage

3) Fuse only required if short-circuit current at installation location is > I_{CU}

Table 7- 19 Short-circuit breaking capacity I_{cu}, I_{cs} according to IEC 60947-2 for 3RV2.1 / 3RV2.2 motor starter protectors in **molded-plastic enclosure 3RV1923-2DA00 / 3RV1923-2GA00 / 3RV1923-2GA10** - Part 1 - Size S00 / Size S0

Motor starter protector	Rated current I_n	Up to 240 V AC[1]			Up to 400 V AC[1] / 415 V AC[2]		
		Icu	Ics	Max. fuse (gG)	Icu	Ics	Max. fuse (gG)[3]
Type	**A**	**kA**	**kA**	**A**	**kA**	**kA**	**A**
Size S00 / Size S0							
3RV2.1 / 3RV2.2	0.16 ... 4.0	100	100	--	100	100	--
	5.0	100	100	--	100	100	--
	6.3	100	100	--	100	100	--
	8	50	50	35	50	50	35
	10	20	20	35	20	20	35
	12.5	10	10	35	10	10	35
	16	10	10	40	10	10	40
Size S0							
3RV2.2	16	10	10	40	10	10	40
	20	4	4	40	4	4	40
	22	4	4	50	4	4	50
	25	4	4	50	4	4	50
	28	4	4	63	4	4	63
	32	4	4	63	4	4	63

--- No back-up fuse required, because short-circuit-proof up to 100 kA.

1) 10% overvoltage

2) 5% overvoltage

3) Fuse only required if short-circuit current at installation location is > I_{cu}

Table 7- 20 Short-circuit breaking capacity I_{CU}, I_{CS} according to IEC 60947-2 for 3RV2.1 / 3RV2.2 motor starter protectors in **molded-plastic enclosure 3RV1923-2DA00 / 3RV1923-2GA00 / 3RV1923-2GA10** - Part 2 - Size S00 / Size S0

Motor starter protector	Rated current I_n	Up to 440 V AC[1] / 460 V AC[2]			Up to 500 V AC[1] / 525 V AC[2]		
		Icu	Ics	Max. fuse (gG)	Icu	Ics	Max. fuse (gG)[3]
Type	**A**	**kA**	**kA**	**A**	**kA**	**kA**	**A**
Size S00 / Size S0							
3RV2.1 / 3RV2.2	0.16 ... 4.0	100	100	--	100	100	--
	5.0	20	20	25	20	20	25
	6.3	10	10	25	10	10	25
	8	7	7	35	7	7	35
	10	5	5	35	5	5	35
	12.5	5	5	35	5	5	35
	16	4	4	40	4	4	40
Size S0							
3RV2.2	16	4	4	40	4	4	40
	20	3	3	40	2	2	40
	22	3	3	50	2	2	50
	25	3	3	50	2	2	50
	28	3	3	63	2	2	63
	32	3	3	63	2	2	63

--- No back-up fuse required, because short-circuit-proof up to 100 kA.

1) 10% overvoltage

2) 5% overvoltage

3) Fuse only required if short-circuit current at installation location is > I_{CU}

Table 7- 21 Short-circuit breaking capacity I_{cu}, I_{cs} according to IEC 60947-2 for 3RV2.1 / 3RV2.2 motor starter protectors in **cast aluminum enclosure 3RV1923-1DA01 / 3RV1923-1GA01** - Part 1 - Size S00 / Size S0

Motor starter protector	Rated current I_n	Up to 240 V AC[1]			Up to 400 V AC[1] / 415 V AC[2]		
		Icu	Ics	Max. fuse (gG)	Icu	Ics	Max. fuse (gG)[3]
Type	**A**	**kA**	**kA**	**A**	**kA**	**kA**	**A**
Size S00 / Size S0							
3RV2.1 / 3RV2.2	0.16 ... 4.0	100	100	--	100	100	--
	5.0	100	100	--	100	100	--
	6.3	100	100	--	100	100	--
	8 ... 12.5	100	100	--	100	100	--
	16	100	100	--	55	30	100
Size S0							
3RV2.2	16	100	100	--	55	25	100
	20	100	100	--	55	25	125
	22	100	100	--	55	25	125
	25	100	100	--	55	25	125
	28	100	100	--	55	25	125
	32	100	100	--	55	25	125

--- No back-up fuse required, because short-circuit-proof up to 100 kA.

1) 10% overvoltage

2) 5% overvoltage

3) Fuse only required if short-circuit current at installation location is > I_{cu}

Table 7- 22 Short-circuit breaking capacity I_{CU}, I_{CS} according to IEC 60947-2 for 3RV2.1 / 3RV2.2 motor starter protectors in **cast aluminum enclosure 3RV1923-1DA01 / 3RV1923-1GA01** - Part 2 - Size S00 / Size S0

Motor starter protector	Rated current I_n	Up to 440 V AC[1] / 460 V AC[2]			Up to 500 V AC[1] / 525 V AC[2]		
		Icu	Ics	Max. fuse (gG)	Icu	Ics	Max. fuse (gG)[3]
Type	**A**	**kA**	**kA**	**A**	**kA**	**kA**	**A**
Size S00 / Size S0							
3RV2.1 / 3RV2.2	0.16 ... 4.0	100	100	--	100	100	--
	5.0	100	100	--	100	100	--
	6.3	100	100	--	100	100	--
	8	50	50	63	42	42	63
	10 ... 12.5	50	50	80	42	42	80
	16	50	12.5	80	10	5	80
Size S0							
3RV2.2	16	50	12.5	80	10	5	80
	20	50	10	80	10	5	80
	22	50	10	100	10	5	80
	25	50	10	100	10	5	80
	28	30	10	125	10	5	100
	32	30	10	125	10	5	100

--- No back-up fuse required, because short-circuit-proof up to 100 kA.

1) 10% overvoltage

2) 5% overvoltage

3) Fuse only required if short-circuit current at installation location is > I_{CU}

7.3.1.4 Short-circuit breaking capacity for motor starter protectors in the IT system

Short-circuit breaking capacity I_{cuIT} in the IT system (IT network) according to IEC 60947-2

3RV2 motor starter protectors are suitable for use in IT systems. The values of I_{cu} and I_{cs} apply for the three-pole short circuit. In the case of a double ground fault in different phases (input and output side of a motor starter protector), the special short-circuit breaking capacity I_{cuIT} applies. The specifications listed in the tables below apply for 3RV2 motor starter protectors.

If the short-circuit current at the place of installation exceeds the rated short-circuit breaking capacity of the motor starter protector specified in the tables, a back-up fuse is required. The maximum rated current of this back-up fuse is indicated in the tables. The rated short-circuit breaking capacity then applies as specified on the fuse.

Table 7- 23 Short-circuit breaking capacity I_{cuIT} in the IT system Part 1 - Size S00

	Rated current I_n	Up to 240 V AC[2]		Up to 400 V AC[2] / 415 V AC[3]	
		I_{cuIT}	Max. fuse (gG)[4]	I_{cuIT}	Max. fuse (gG)[4, 5]
	A	kA	A	kA	A
Size S00					
3RV2.11	0.16 ... 0.4	100	[1]	100	[1]
	0.5	100	[1]	100	[1]
	0.63	100	[1]	100	[1]
	0.8	100	[1]	100	[1]
	1	100	[1]	100	[1]
	1.25	100	[1]	100	[1]
	1.6	100	[1]	100	[1]
	2	100	[1]	8	25
	2.5	100	[1]	8	25
	3.2	100	[1]	8	32
	4	100	[1]	4	32
	5	100	[1]	4	32
	6.3	100	[1]	4	50
	8	100	[1],	4	50
	10	100	[1]	4	50
	12.5	100	[1]	4	63
	16	55	80	4	63

[1] No back-up fuse required, because short-circuit-proof up to 100 kA

[2] 5% overvoltage

[3] Without overvoltage

[4] Back-up fuse only required if short-circuit current at installation location is > I_{cuIT}

[5] Alternatively, fuseless limiter combinations can be used for 690 V AC.

Table 7- 24 Short-circuit breaking capacity I_{cuIT} in the IT system Part 2 - Size S00

	Rated current I_n	Up to 440 V AC[2] / 460 V AC[3]		Up to 500 V AC[2] / 525 V AC[3]		Up to 690 V AC [2] [5]	
		I_{cuIT}	Max. fuse (gG)[4]	I_{cuIT}	Max. fuse (gG)[4]	I_{cuIT}	Max. fuse (gG)[4]
	A	kA	A	kA	A	kA	A
Size S00							
3RV2.11	0.16 ... 0.4	100	[1]	100	[1]	100	[1]
	0.5	100	[1]	100	[1]	0.5	4
	0.63	100	[1]	100	[1]	0.5	6
	0.8	100	[1]	100	[1]	0.5	6
	1	2	10	2	10	1.5	10
	1.25	2	16	2	16	1.5	16
	1.6	2	20	2	20	1.5	16
	2	2	25	2	25	1.5	20
	2.5	2	25	2	25	1.5	20
	3.2	2	32	2	32	1.5	25
	4	1.5	32	1.5	32	1.5	25
	5	1.5	32	1.5	32	1.5	25
	6.3	1	40	1	40	1	35
	8	1	40	1	40	1	35
	10	1	40	1	40	1	40
	12.5	1	50	1	50	1	40
	16	1	50	1	50	1	40

1) No back-up fuse required, because short-circuit-proof up to 100 kA

2) 5% overvoltage

3) Without overvoltage

4) Back-up fuse only required if short-circuit current at installation location is > I_{cuIT}

5) Overvoltage category II applies for applications in IT systems > 600 V

Table 7- 25 Short-circuit breaking capacity I_{cuIT} in the IT system Part 1 - Size S0

	Rated current I_n	Up to 240 V AC[2]		Up to 400 V AC[2] / 415 V AC[3]	
		I_{cuIT}	Max. fuse (gG)[4]	I_{cuIT}	Max. fuse (gG)[4, 5]
	A	kA	A	kA	A
Size S0					
3RV2.21	0.16 ... 0.4	100	[1]	100	[1]
	0.5	100	[1]	100	[1]
	0.63	100	[1]	100	[1]
	0.8	100	[1]	100	[1]
	1	100	[1]	100	[1]
	1.25	100	[1]	100	[1]
	1.6	100	[1]	100	[1]
	2	100	[1]	8	25
	2.5	100	[1]	8	25
	3.2	100	[1]	8	32
	4	100	[1]	4	32
	5	100	[1]	4	32
	6.3	100	[1]	4	50
	8	100	[1]	4	50
	10	100	[1]	4	50
	12.5	100	[1]	4	63
	16	55	80	4	63
	20	55	80	4	63
	22	55	80	4	63
	25	55	80	4	63
	28	55	80	2	63
	32	55	80	2	63
	36	20	80	2	63
	40	20	80	2	63

1) No back-up fuse required, because short-circuit-proof up to 100 kA

2) 5% overvoltage

3) Without overvoltage

4) Back-up fuse only required if short-circuit current at installation location is > I_{cuIT}

5) Alternatively, fuseless limiter combinations can be used for 690 V AC.

Table 7- 26 Short-circuit breaking capacity I_{cuIT} in the IT system Part 2 - Size S0

	Rated current I_n	Up to 440 V AC[2] / 460 V AC[3]		Up to 500 V AC[2] / 525 V AC[3]		Up to 690 V AC [2] [5]	
		I_{cuIT}	Max. fuse (gG)[4]	I_{cuIT}	Max. fuse (gG)[4]	I_{cuIT}	Max. fuse (gG)[4]
	A	kA	A	kA	A	kA	A
Size S0							
3RV2.21	0.16 ... 0.4	100	[1]	100	[1]	100	[1]
	0.5	100	[1]	100	[1]	0.5	4
	0.63	100	[1]	100	[1]	0.5	6
	0.8	100	[1]	100	[1]	0.5	6
	1	2	10	2	10	1.5	10
	1.25	2	16	2	16	1.5	16
	1.6	2	20	2	20	1.5	16
	2	2	25	2	25	1.5	20
	2.5	2	25	2	25	1.5	20
	3.2	2	32	2	32	1.5	25
	4	1.5	32	1.5	32	1.5	25
	5	1.5	32	1.5	32	1.5	25
	6.3	1	40	1	40	1	35
	8	1	40	1	40	1	35
	10	1	40	1	40	1	40
	12.5	1	50	1	50	1	40
	16	1	50	1	50	1	40
	20	1	50	1	50	1	50
	22	1	50	1	50	1	50
	25	1	50	1	50	1	50
	28	1	63	1	63	1	63
	32	1	63	1	63	1	63
	36	1	63	1	63	1	63
	40	1	63	1	63	1	63

1) No back-up fuse required, because short-circuit-proof up to 100 kA

2) 5% overvoltage

3) Without overvoltage

4) Back-up fuse only required if short-circuit current at installation location is > I_{cuIT}

5) Overvoltage category II applies for applications in IT systems > 600 V

Table 7- 27 Short-circuit breaking capacity I_{cuIT} in the IT system Part 1 - Size S2

	Rated current I_n	Up to 240 V AC[2]		Up to 400 V AC[2] / 415 V AC[3]	
		I_{cuIT}	Max. fuse (gG)[4]	I_{cuIT}	Max. fuse (gG)[4, 5]
	A	kA	A	kA	A
Size S2					
3RV2031 3RV2131 3RV2331	14 ... 25	100	[1]	8	100
	32 ... 45	100	[1]	6	125
	52 ... 80	100	[1]	4	160
Size S2, with increased breaking capacity					
3RV2032 3RV2332	14 ... 25	100	[1]	8	100
	32 ... 45	100	[1]	6	125
	52	100	[1]	6	160
	59 ... 80	100	[1]	6	160

[1] No back-up fuse required, because short-circuit-proof up to 100 kA

[2] 10% overvoltage

[3] 5% overvoltage

[4] Back-up fuse only required if short-circuit current at installation location is > I_{cuIT}

[5] Alternatively, fuseless limiter combinations can be used for 690 V AC.

Table 7- 28 Short-circuit breaking capacity I_{cuIT} in the IT system Part 2 - Size S2

	Rated current I_n	Up to 440 V AC[1] / 460 V AC[2]		Up to 500 V AC[1] / 525 V AC[2]		Up to 690 V AC [1] [4]	
		I_{cuIT}	Max. fuse (gG)[3]	I_{cuIT}	Max. fuse (gG)[3]	I_{cuIT}	Max. fuse (gG)[3]
	A	kA	A	kA	A	kA	A
Size S2							
3RV2031 3RV2131 3RV2331	14 ... 25	6	80	6	80	4	63
	32 ... 45	4	100	4	100	3	80
	52 ... 80	3	125	3	125	2	100
Size S2, with increased breaking capacity							
3RV2032 3RV2332	14 ... 25	6	80	6	80	4	63
	32 ... 45	6	100	6	100	4	80
	52	6	125	6	125	4	100
	59 ... 80	4	125	4	125	4	100

[1] 10% overvoltage

[2] 5% overvoltage

[3] Back-up fuse only required if short-circuit current at installation location is > I_{cuIT}

[4] Overvoltage category II applies for applications in IT systems > 600 V

Table 7- 29 Short-circuit breaking capacity I_{cuIT} in the IT system Part 1 - Size S3

	Rated current I_n	Up to 240 V AC[2]		Up to 400 V AC[2] / 415 V AC[3]	
		I_{cuIT}	Max. fuse (gG)[4]	I_{cuIT}	Max. fuse (gG)[4, 5]
	A	kA	A	kA	A
Size S3					
3RV2.41	40	65	125	8	63
	50	65	125	6	80
	63	65	160	5	80
	75	65	160	5	100
	84	65	160	5	125
	93	65	160	5	125
	100	65	160	5	125
Size S3, with increased breaking capacity					
3RV2.42	40	100	[1]	12	80
	50	100	[1]	10	100
	63	100	[1]	7.5	100
	75	100	[1]	6	125
	84	100	[1]	6	160
	93	100	[1]	6	160
	100	100	[1]	6	160

1) No back-up fuse required, because short-circuit-proof up to 100 kA

2) 10% overvoltage

3) 5% overvoltage

4) Back-up fuse only required if short-circuit current at installation location is > I_{cuIT}

5) Alternatively, fuseless limiter combinations can be used for 690 V AC.

Table 7- 30 Short-circuit breaking capacity I_{cuIT} in the IT system Part 2 - Size S3

	Rated current I_n	Up to 440 V AC[1] / 460 V AC[2]		Up to 500 V AC[1] / 525 V AC[2]		Up to 690 V AC [1] [4]	
		I_{cuIT}	Max. fuse (gG)[3]	I_{cuIT}	Max. fuse (gG)[3]	I_{cuIT}	Max. fuse (gG)[3]
	A	kA	A	kA	A	kA	A
Size S3							
3RV2.41	40	5	50	5	50	5	50
	50	3	63	3	63	3	63
	63	3	63	3	63	3	63
	75	2	80	2	80	2	80
	84	2	100	2	100	2	100
	93	2	100	2	100	2	100
	100	2	100	2	100	2	100
Size S3, with increased breaking capacity							
3RV2.42	40	6	63	6	63	6	63
	50	4	80	4	80	4	80
	63	4	80	4	80	4	80
	75	3	100	3	100	3	100
	84	3	125	3	125	3	125
	93	3	125	3	125	3	125
	100	3	125	3	125	3	125

1) 10% overvoltage

2) 5% overvoltage

3) Back-up fuse only required if short-circuit current at installation location is > I_{cuIT}

4) Overvoltage category II applies for applications in IT systems > 600 V

7.3.1.5 Short-circuit breaking capacity for motor starter protectors with limiter function

Short-circuit breaking capacity for motor starter protectors with limiter function for 500 V AC and 690 V AC according to IEC 60947-2

The tables show the rated ultimate short-circuit breaking capacity Icu and the rated service short-circuit breaking capacity Ics with an upstream standard motor starter protector that fulfills the limiter function at voltages 500 V AC and 690 V AC.

The short-circuit breaking capacity can be increased significantly with an upstream standard motor starter protector with limiter function. The motor starter protector connected downstream must be set to the rated current of the load.

With motor starter protector assemblies, note the clearance to grounded parts and between the motor starter protectors. Short-circuit proof wiring between the motor starter protectors must also be ensured. The motor starter protectors may be mounted side by side in a modular arrangement.

Table 7- 31 Short-circuit breaking capacity for motor starter protectors with limiter function - Size S00

Type			Up to 500 V AC[1] / 525 V AC[2]		Up to 690 V AC[1]	
Motor starter protector	**Limiter**	**In [A]**	**Icu [kA]**	**Ics [kA]**	**Icu [kA]**	**Ics [kA]**
Size S00						
3RV2011	3RV2321-4EC10 (I_n = 32 A)	2	--	--	50	25
		2.5	--	--	50	25
		3.2	--	--	50	25
		4	--	--	50	25
		5	--	--	50	25
		6.3	--	--	50	25
		8	100	50	20	10
		10	100	50	20[3]	10[3]
		12.5	100	50	20[3]	10[3]
		16	100	50	20[3]	10[3]
	3RV2331-4WC10 (I_n = 52 A)	10 ... 16	--	--	50	25

-- A limiter is not required.

1) 10% overvoltage

2) 5% overvoltage

3) Infeed to the limiter is always on the side 1L1/3L2/5L3.

Table 7- 32 Short-circuit breaking capacity for motor starter protectors with limiter function - Size S0

Type				Up to 500 V AC[1] / 525 V AC[2]	Up to 690 V AC[1]	
Size S0						
3RV2021	3RV2321-4EC10 (I_n = 32 A)	16	100	50	20[3]	10[3]
		20	100	50	20[3]	10[3]
		22	100	50	20[3]	10[3]
		25	100	50	20[3]	10[3]
		28	100	50	20[3]	10[3]
		32	100	50	20[3]	10[3]
	3RV2331-4WC10 (I_n = 52 A)	16 ... 32	--	--	50	20

-- A limiter is not required.

1) 10% overvoltage

2) 5% overvoltage

3) Infeed to the limiter is always on the side 1L1/3L2/5L3.

Table 7- 33 Short-circuit breaking capacity for motor starter protectors with limiter function - Size S2

Type				Up to 500 V AC[1] / 525 V AC[2]	Up to 690 V AC[1]	
Size S2, with increased breaking capacity						
3RV2032	3RV2332-4RC10 (I_n = 80 A)	14 ... 80	100	50	75	35

1) 10% overvoltage

2) 5% overvoltage

Table 7- 34 Short-circuit breaking capacity for motor starter protectors with limiter function - Size S3

Type				Up to 500 V AC[1] / 525 V AC[2]	Up to 690 V AC[1]	
Size S3, with increased breaking capacity[3]						
3RV2042	3RV2342-4MC10 (I_n = 100 A)	40 ... 100	100	50	50	25

1) 10% overvoltage

2) 5% overvoltage

3) Infeed to the limiter is always on the side 2T1 / 4T2 / 6T3. Phase barriers 3RV2948-1K must be used on the infeed side.

7.4 Motor protection

The tripping characteristic of 3RV10 / 3RV20 / 3RV21 motor starter protectors is primarily designed for protecting three-phase motors.

The rated current I_n of the motor to be protected (see nameplate) is set on the setting scale. The short-circuit release is factory-set to a multiple of the motor starter protector's rated current (top value on the setting scale). This ensures problem-free ramping-up and safe protection for the motor. The response value of the short-circuit release (in A) is lasered onto the front of the device.

The phase loss sensitivity (not in the case of 3RV20..-.....-0DA0, 3RV23, 3RV27 and 3RV28) of the motor starter protector ensures that it trips in good time in the event of a phase failure or significant phase unbalance. The motor starter protector tripping prevents overcurrents from occurring in the remaining phases, thus preventing damage to the load.

7.5 System protection

3RV20 and 3RV21 motor starter protectors are also suitable for protecting systems.

To prevent premature tripping caused by phase loss sensitivity, the load applied to each of the three current paths of the motor starter protector in standard version must always be the same. With single-phase loads, the current paths must be connected in series. There are also motor starter protectors 3RV20..-.....-0DA0 without phase loss sensitivity specially developed for system protection. The 3RV20..-.....-0DA0 motor starter protectors for system protection do not have UL approval and are only suitable for applications according to IEC.

3RV27 and 3RV28 circuit breakers are also suitable for protecting systems. The devices do not possess any phase failure detection and are also approved as Circuit Breaker in accordance with UL 489 or CSA C22.2 No.5.

7.6 Motor protection with overload relay function

3RV21 motor starter protectors with overload relay function have the same overload and short-circuit release characteristic as 3RV20 motor starter protectors. However, the overload releases have no effect on the motor starter protectors' breaker latching mechanism. In the event of an overload, the motor starter protector remains on.

The overload release is linked to two auxiliary contacts (1 NO contact + 1 NC contact) mounted on the side; these are switched in the event of an overload. The auxiliary contacts can be evaluated or can be used to disconnect a downstream contactor. The auxiliary contacts are reset automatically once the motor starter protector has cooled down.

CAUTION

In the overload range the motor starter protector with overload relay function does not protect itself. Provision has to be made, therefore, to ensure that the current is safely disconnected by a downstream switching device such as a contactor.

Note

Fixed connection: Auxiliary contacts with motor starter protector

The auxiliary contacts are connected to the right-hand side of the motor starter protector. The connection is fixed and cannot be removed.

This means that auxiliary releases cannot be mounted on the right-hand side of 3RV21 motor starter protectors with overload relay function.

Reference

More information ...	Can be found in the chapter titled ...
About motor starter protector operation	Operation (Page 145)

7.7 Using 3RV1011 and 3RV2 motor starter protectors with highly energy-efficient motors (IE3 / IE4)

7.7.1 General information on the startup characteristics of highly energy-efficient motors (IE3 / IE4)

Motor starter protectors have been conceived to protect and switch motors. They assume the task of line protection in the event of an overload or short-circuit.
To this end, motor starter protectors are equipped with sensors for overload and short-circuit detection and possess an interruption point for switching motor and short-circuit currents. Without technical adaptation to the new highly energy-efficient motors (IE3 / IE4), the problems described below can arise.

7.7.1.1 Short-circuit detection

In the event of unusually high currents in the electrical installation, short-circuit detection serves to keep the thermal and dynamic load low and ensure safe shutdown. The response threshold should lie above the currents that a starting motor causes. The dimensioning of a system is influenced by the response value. The higher the response value, the higher the chosen cable cross-sections to be protected must be. This increases costs in the system and for the switching devices. This is why the response values have been adapted to the previously typical motor starting currents.

The drawback of the new, more efficient motors (IE3 / IE4) is that, on average, the starting currents and magnetization currents (inrush currents) arising at the moment of switching on are considerably higher than in the case of the previous generations of motors. The spread of locked rotor and inrush currents is very wide. Motors with high values can therefore cause the motor starter protector's short-circuit detection to respond. This leads to unintentional shutdown ("early tripping") during motor starting. Early tripping can occur whenever the motor current lies in the top range of the motor starter protector's setting scale and a motor with a high inrush current is used.

7.7.1.2 Making and breaking capacity of motor starter protectors

Making and breaking capacity tests are conducted in compliance with the standard under three-phase AC loading with 10 to 8 times the rated current. In some cases, the starting and inrush currents of IE3 / IE4 motors are clearly above these values. In isolated cases, current spikes that arise during switching on can cause brief lifting of the contacts without triggering a breaking operation by short-circuit detection. This can lead to welding of the contacts.

Where the motor is switched on by a contactor, for example, the motor starter protector's making/breaking capacity is irrelevant. In this case, the motor current is only carried. The current that can be carried without any problems is normally higher than the switching device's making/breaking capacity. This should not lead to welding of the contacts.

7.7.1.3 Rated motor current/setting scale

For motor protection, the motor's rated current must be set on the motor starter protector's setting scale. The new IE3 / IE4 motors generally have lower rated currents. This can lead to situations in which a motor starter protector with a lower rated current has to be chosen for the same motor rating. Thus, the short-circuit detection (Page 88) response value also drops and can lead to tripping during motor starting.

7.7.2 Optimization of 3RV1011 and 3RV2 motor starter protectors for IE3 / IE4 motors

The motor starter protectors have been revised in relation to the higher locked rotor currents and inrush currents as follows:

- Raising of the lower short-circuit detection response tolerances without changes to the maximum values.
  → No change of customer-end system dimensioning.
- Adaptation of making/breaking capacity.
  → For necessary restrictions of maximum locked rotor currents, see the chapter entitled "Technical modifications/restrictions of 3RV2 motor starter protectors (Page 91)".
- Adaptation of some motor starter protector versions' overload releases and setting scales.
  → Avoidance of using smaller motor starter protectors due to lower rated motor currents (see chapter "Technical modifications/restrictions of 3RV2 motor starter protectors (Page 91)")

In the case of motors with very high locked rotor and inrush currents, problems can arise despite adaptations, e.g. undesired tripping on starting. It is recommended that motor starter protectors be selected such that the setting does not need to be made in the upper range of the setting scale. This reduces power loss in the device (cost saving and reduced temperature rise in the control cabinet) and increases the distance from the short-circuit releases' response limits.

Selection example (size S0)

Rated motor current: 15 A
Motor starter protector A: Setting scale 10 ... 16 A
Motor starter protector B: Setting scale 13 ... 20 A

→ Recommended motor starter protector 13 ... 20 A because of reduced power loss and greater distance from response limits.

In the calculation example, the power loss in the case of motor starter protector B is lower by about 35 % than in the case of motor starter protector A.
The short-circuit releases' response limits always refer to the maximum set value.
In the case of motor starter protector A, the short-circuit release's response value is 208 A (13 · 16 A).
When the value 15 A is set, the distance from the short-circuit release's response limit is 13.86 times the current setting (208 A/15 A =13.86).
In the case of motor starter protector B, the short-circuit release's response limit is 260 A (13 · 20 A). When the value 15 A is set, the distance from the short-circuit release's response limit is 17.33 times the current setting (260 A/15 A = 17.33).
In this example, the distance from the response limit of 13.86 times the current setting in the case of motor starter protector A increases to 17.33 times the current setting in the case of motor starter protector B.

7.7.3 Technical modifications/restrictions of 3RV2 motor starter protectors

Restriction of the maximum starting current is necessary for one setting range each of sizes S0, S2 and S3.
The reason for this lies in the corresponding variants' making and breaking capacities.

3RV2 motor starter protectors	3RV2.21-4E...	3RV2.3.-4R...	3RV2.4.-4M...
Setting range for overload release	27 to 32 A	70 to 80 A	80 ... 100 A
Reduced starting current ratio	8 times	9 times	7.8 times
Max. permissible starting current	32 A x 8 = 256 A	80 A x 9 = 720 A	100 A x 7.8 = 780 A

Starting current ratio:	Maximum permissible rated operational current [A]		
	3RV2.21-4E...	3RV2.3.-4R...	3RV2.4.-4M...
≤ 8 times	32.0	80.0	97.5 A
8.5 times	30.2	80.0	91.8 A
9 times	28.4	80.0	86.6 A
9.5 times	27.0	75.8	82.1 A
10 times	-	72.0	--

Additionally, in the case of size S0 motor starter protectors, the setting range variants "-4P" (30 to 36 A) and "-4F" (34 to 40 A) are not suitable for use with IE3 / IE4 motors. You are advised to use size S2 motor starter protectors in these current ranges.

Extended setting ranges of overload releases (sizes S00 and S0)

For the following versions of the motor starter protectors (sizes S00 and S0), the setting ranges of the overload releases have been extended and adapted to the lower rated motor current of IE3 / IE4 motors:

Size	Article number	Setting range for overload release Previously	Setting range for overload release New
S00	3RV2.11-4A...	11 to 16 A	10 to 16 A
S0	3RV2.21-4A...	11 to 16 A	10 to 16 A
	3RV2.21-4B...	14 to 20 A	13 to 20 A
	3RV2.21-4C...	17 to 22 A	16 to 22 A
	3RV2.21-4D...	20 to 25 A	18 to 25 A

7.8 Short-circuit protection for starter combinations

3RV23 MSP for starter combinations

3RV23 MSPs for starter combinations are motor starter protectors without overload releases. They are always used in conjunction with a contactor and overload relay, as the motor starter protector alone is not able to protect the motor and itself against overloads.

Function

In the event of an overload, the overload relay opens the contactor. The motor starter protector remains on. The motor starter protector will only trip in the event of a short circuit in the feeder.

The short-circuit release is factory-set to a multiple of the motor starter protector's rated current (top setting scale). The response value of the short-circuit release (in A) is lasered onto the front of the device. This ensures problem-free ramping-up and safe protection for the motor.

Advantage

In the event of tripping due to overload, an automatic or manual reset can be performed without having to open the control cabinet.

Using MSPs for starter combinations with IE3 / IE4 motors

As described in the chapter "Using 3RV1011 and 3RV2 motor starter protectors with highly energy-efficient motors (IE3 / IE4) (Page 88)", the integrated motor starting currents and inrush currents can result in early tripping.
For this reason, when selecting a combination of thermal overload relays and MSPs for starter combinations, you are recommended to proceed similarly to selecting motor starter protectors. The selection should be made in such a way that the devices are not operated in the upper range of the setting scale. As a result, power loss is also reduced in the case of the thermal overload relays.

Sizes S00 and S0

On feeders of sizes S00 and S0, we recommend you select the motor circuit protector and the thermal overload relay each with the same rated current: e.g. MSP for starter combination 3RV2311-1FC10 (with rated current 5 A) and thermal overload relay 3RU2116-1FB10 (setting range 3.5 ... 5 A → rated current 5 A).

Sizes S2

For the design of feeders of size S2, we recommend the device combinations given in the following table:

MSPs for starter protection		Thermal overload relay	
Rated current [A]	**Article number**	**Setting range [A]**	**Article number**
17	3RV233x-4TC10	11 ... 16	3RU2136-4AB0
20	3RV233x-4BC10	14 ... 20	3RU2136-4BB0
25	3RV233x-4DC10	18 ... 25	3RU2136-4DB0
32	3RV233x-4EC10	22 ... 32	3RU2136-4EB0
40	3RV233x-4UC10	28 ... 40	3RU2136-4FB0
45	3RV233x-4VC10	36 ... 45	3RU2136-4GB0
52	3RV233x-4WC10	40 ... 50	3RU2136-4HB0
59	3RV233x-4XC10	47 ... 57	3RU2136-4QB0
65	3RV233x-4JC10	54 ... 65	3RU2136-4JB0
73	3RV233x-4KC10	62 ... 73	3RU2136-4KB0
80	3RV233x-4RC10	70 ... 80	3RU2136-4RB0

x = 1: 65 kA

x = 2: 100 kA

Size S3

For the design of size S3 feeders, we recommend the device combinations given in the following table:

MSPs for starter protection		Thermal overload relay	
Rated current [A]	**Article number**	**Setting range [A]**	**Article number**
63	3RV234x-4JC10	45 ... 63	3RU2146-4JB0
75	3RV234x-4KC10	57 ... 75	3RU2146-4KB0
84	3RV234x-4RC10	70 ... 90	3RU2146-4LB0
93	3RV234x-4YC10	80 ... 100	3RU2146-4MB0
100	3RV234x-4MC10		

x = 1: 65 kA

x = 2: 100 kA

Feeders with MSPs for starter combinations and solid-state overload relays

Consult Technical Support (https://support.industry.siemens.com/My/ww/en/requests) for information about the correct selection of devices for assembling feeders with MSPs for starter combinations and solid-state overload relays.

7.9 Transformer protection

Protection against inrush currents

When control transformers are protected on the primary side, the high inrush currents generated at the time the transformers are switched on often cause spurious tripping in the protective devices. The short-circuit releases of motor starter protectors for transformer protection (3RV24, 3RV28) are set to a higher value than in the case of the 3RV20 motor starter protectors. This avoids unintentional releases otherwise caused by high inrush currents. The response value of the short-circuit release (in A) is lasered onto the front of the device. This version of motor starter protector is not necessary in the case of control transformers with low inrush currents. In such cases, 3RV20 motor starter protectors can be used for motor protection.

7.10 Main switch

3RV2 motor starter protectors satisfy the features of main switches according to IEC 60947-2.

3RV20 and 3RV21 motor starter protectors are also suitable for protecting systems.

In order to prevent premature tripping caused by phase loss sensitivity, the charge applied to each of the three current paths must always be the same. With single-phase loads, connect the current paths in series.

For system protection, specially developed 3RV20.. -.....-0DA0 motor starter protectors without phase failure sensitivity are available.

7.11 Fuse monitoring

The 3RV1611-0BD10 circuit breaker is used for fuse monitoring. A current path of the circuit breaker is connected in parallel to each fuse. When a fuse fails, the current flows via the parallel connected current path of the circuit breaker, and trips it.

Safety information

DANGER

Hazardous voltage.
Will cause death or serious injury.

Turn off and lock out all power supplying this device before working on this device.

DANGER

Hazardous voltage.
Will cause death or serious injury.

- Fuse monitoring with the 3RV1611-0BD10 motor starter protector is not permissible in branches with power controllers in which DC regeneration with higher values (DC > 250 V for one current path or DC > 600 V for series connection of three current paths) can occur in the event of a fault.
- If downstream plant sections are to be isolated with the fuses monitored, you must ensure that the 3RV1611-0BD10 circuit breaker for fuse monitoring connected in parallel cannot cause parasitic voltages.
- In conjunction with **switch disconnectors with fuses**, disconnection in the ON position is not ensured without fuses.
- In conjunction with **fuse bases**, disconnection is only guaranteed with removed fuses if the fuse monitoring device is additionally switched off.

Note

Displaying additional information

When monitoring fuses that are used for disconnection, information specifying the equipment identifier must be attached in the immediate vicinity of the fuses.
When a fuse is removed and the monitoring device is not switched off, voltage can still be present in the presumably isolated area due to the parallel connected voltage path of the monitoring device.

The following text is recommended for the note:

NOTICE

Switching off the fuse monitoring device

For isolation, the fuse monitoring device with equipment identifier ..... must additionally be switched off.

Auxiliary switch functions

The circuit breaker for fuse monitoring can be equipped with a transverse or lateral auxiliary switch. The auxiliary switch signals the tripping of the circuit breaker and thus the failure of the fuse. The auxiliary switch causes an all-pole disconnection of the faulty circuit by means of a corresponding switching device.

Rated operating voltage

The 3RV1611-0BD10 circuit breaker for fuse monitoring is suitable for the following voltage ranges:

- 24 to 690 V AC, 50 / 60 Hz
- 24 to 250 V DC
- 100 to 600 V DC

Rated short-circuit breaking capacity I_{CN} 100 kA

U_e	24 to 690 V AC	24 to 250 V DC	100 to 600 V DC
	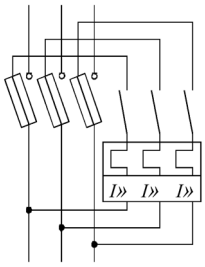	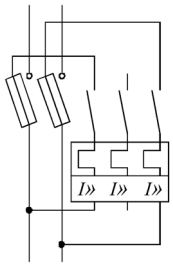	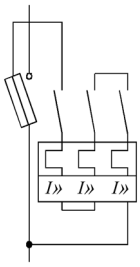

Parallel cables / meshed networks

NOTICE
With parallel cables and meshed networks, tripping and signaling occurs only when the voltage difference on the motor starter protector is at least 24 V.

7.12 Voltage transformer circuit breaker

The voltage transformer circuit breaker corresponds largely to the 3RV1 motor starter protector of size S00.

To reliably prevent false tripping of the distance protection, two features are taken into account:

- Auxiliary switches for blocking the distance protection
- Impedance via the main contacts

Auxiliary switches for blocking the distance protection

The main contacts of the circuit breaker are opened during tripping or switching off. The distance protection detects a low impedance and would interpret this incorrectly as a near fault which would result in immediate disconnection of the network within a few milliseconds.

To prevent this false tripping, special auxiliary contacts are required that possess a specific time-based assignment to the main contacts of the motor starter protector. With these auxiliary contacts, the distance protection is blocked and false tripping does not occur.

1 CO contact permanently installed in the voltage transformer circuit breaker is available as an auxiliary switch for blocking the distance protection. The CO contact can be used as 1 NO contact (11-14) or 1 NC contact (11-12). These auxiliary contacts possess a high degree of reliability at the lowest possible rated operational currents. This makes the circuit breaker suitable for today's electronic distance protection devices too.

The time diagrams below represent the time-based assignment of the auxiliary contacts to the main contacts of the circuit breaker.

		Power on →	Power off/short-circuit trip →
①	Main contact elements	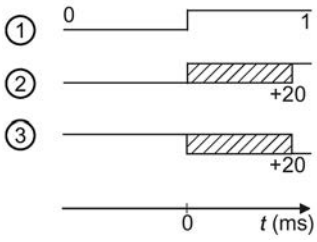	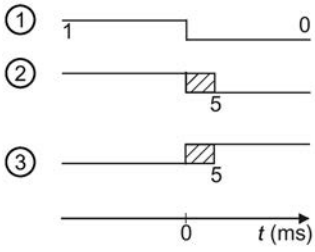
②	1 NO contract 11-14		
③	1 NC contact 11-12		

For signaling purposes, further laterally mountable auxiliary switches from the SIRIUS range can be used. These cannot be used for blocking the distance protection device.

Impedance via the main contacts

Only low currents flow via the main contacts of the voltage transformer circuit breaker.

For the measuring system of the distance protection to function reliably, the contact resistances of the main contacts must be minimal and must remain almost constant throughout the service life of the circuit breaker.

This is implemented in the 3RV16 voltage transformer circuit breakers with the appropriate contacts and contact materials.

7.13 Use in IT systems

3RV motor starter protectors are suitable for use in IT systems according to IEC 60947-2. In the event of a 3-pole short circuit, they respond in exactly the same way as other systems: For this reason, the same short-circuit breaking capacity I_{cu} and I_{cs} applies.

Function

In the case of IT systems the first fault (ground fault) does not necessarily lead to the immediate disconnection of the system. A second unrelated fault (ground fault) can reduce the switching capacity of the motor starter protector.

This is the case specifically if both ground faults occur in different phases and if one of the two ground faults is on the motor starter protector's input side and the other is on its outgoing side.

To maintain the motor starter protector's short-circuit-protection function even in the case of two separate ground faults (known as a double line-to-ground fault), the reduced short-circuit breaking capacity for double ground faults in IT systems I_{cuIT} has to be taken into account. Detecting a ground fault when it occurs (ground-fault monitoring) and dealing with it quickly can significantly reduce the risk of a double ground fault and, as a result, that of a reduced short-circuit breaking capacity I_{cuIT}.

Note

Double ground fault

In the case of the "2-pole switching, non-grounded system" circuit, it is assumed that safe tripping will follow even in the event of a double ground fault which short-circuits two contacts.

Reference

More information ...	Can be found in the chapter titled ...
About short-circuit breaking capacity	Technical data (Page 269)

7.14 Devices for North America (UL/CSA)

7.14.1 Approval in compliance with UL 60947-4-1 (UL 508) / CSA C22.2 No. 14 (CSA-C22.2 No. 60947-4-1)

The motor starter protectors/circuit breakers in the 3RV1 and 3RV2 series are approved for UL / CSA and can be used in accordance with
UL 60947-4-1 (UL 508) / CSA C22.2 No. 14 (CSA-C22.2 No. 60947-4-1) individually or as load feeders in conjunction with a contactor.

These motor starter protectors can be used as "Manual Motor Controller" for "Group Installations", as "Manual Motor Controller Suitable for Tap Conductor Protection in Group Installations", and as "Self-Protected Combination Motor Controller (Type E)".

7.14.1.1 "Manual motor controller", group installation

3RV1 and 3RV2 motor starter protectors as "Manual Motor Controller"

Upstream short-circuit protection is always implemented if the motor starter protector is used as a "Manual Motor Controller". This requires approved fuses (according to UL 248) or a circuit breaker (according to UL 489/CSA C22.2 No. 5). These devices must be dimensioned according to the National Electrical Code (UL) or Canadian Electrical Code (CSA) installation regulation respectively.

The file numbers for the approval of the 3RV as a manual motor controller are as follows:

- UL File No. 47705, CCN: NLRV
- CSA Master Contract 165071, Product Class: 3211 05

7.14.1.2 "Manual motor controller suitable for tap conductor protection in group installations"

3RV1011 [1] and 3RV20 motor starter protectors as "Manual Motor Controller Suitable for Tap Conductor Protection in Group Installations"

The "Manual Motor Controller Suitable for Tap Conductor Protection in Group Installations" application is only possible in the case of UL.

The CSA does not recognize this approval! Upstream short-circuit protection is always implemented if the motor starter protector is used as a "Manual Motor Controller Suitable for Tap Conductor Protection in Group Installations". This requires approved fuses (according to UL 248) or a circuit breaker (according to UL 489).

These devices must be dimensioned according to the National Electrical Code installation regulation.

3RV1011 [1] and 3RV20 motor starter protectors are approved as "Manual Motor Controller Suitable for Tap Conductor Protection in Group Installations" under the following file number:

- UL File No. 47705, CCN: NLRV

[1] The approval does not apply for 3RV1011 motor starter protectors with rated current I_n = 10 A and I_n = 12 A

7.14.1.3 "Self-protected combination motor controller (type E)"

3RV2 motor starter protectors[1)] as "Self-Protected Combination Motor Controller (Type E)" (up to 100 A)

For approval according to UL 60947-4-1 (UL 508), a clearance of 1 inch and a creepage distance of 2 inches are required on the line side for a "Self-Protected Combination Motor Controller".

The 3RV20 / 3RV24 motor starter protectors in size S00 / S0 with screw-type terminals are therefore approved according to UL 60947-4-1 (UL 508) together with the terminal block (article no. 3RV2928-1H) or phase barriers (article no. 3RV2928-1K). The motor starter protectors with spring-loaded connection technology are approved with the 3RV2917 infeed system as Type E.
By virtue of their design, some 3RV20 / 3RV24 motor starter protectors in size S2 already fulfill the required clearances and creepage distances at the input end:

- 3RV2.31-4S.1.
- 3RV2.31-4T.1.
- 3RV2.31-4B.1.
- 3RV2.31-4D.1.
- 3RV2.31-4E.1.
- 3RV2.31-4P.1.
- 3RV2.31-4U.1.
- 3RV2.31-4V.1.

The following motor starter protectors in size S2 are approved with phase barriers (article no. 3RV2938-1K):

- 3RV2.31-4W.1.
- 3RV2.31-4X.1.
- 3RV2.31-4J.1.
- 3RV2.31-4K.1.
- 3RV2431-4VA1.
- 3RV2.32-.....

The 3RV20 motor starter protectors in size S3 are approved according to UL 60947-4-1 (UL 508) together with the terminal block (article no. 3RT2946-4GA07).

CSA approval does not require extended clearances and creepage distances. The terminal blocks or phase barriers can, therefore, be omitted for use as a "Self-Protected Combination Motor Controller" according to the CSA.

The 3RV20 / 3RV24 motor starter protectors are approved as "Self-Protected Combination Motor Controller" under the following file numbers:

- UL File No. E156943, CCN: NKJH
- CSA Master Contract 165071, Product Class: 3211 08

[1] Not applicable to 3RV1011 motor starter protectors.

7.14.2 Approval as "circuit breaker" according to UL 489/CSA C 22.2 No. 5

3RV27 and 3RV28 as "Circuit Breaker"

These devices are approved as Circuit Breaker according to UL 489 or CSA C22.2 No.5 with 100% rated current ("100 %-rated breaker"). As such they can be used as upstream short-circuit protection devices for "Manual Motor Controller" and "Manual Motor Controller Suitable for Tap Conductor Protection in Group Installations".

3RV27 and 3RV28 are approved as "Circuit Breaker" under the following file numbers:

- UL File No. E235044, CCN: DIVQ,
- CSA Master Contract 165071, Product Class: 1432 01.

7.15 Application environment

Introduction

The following information must be taken into account when planning applications involving 3RV motor starter protectors.

Installation altitude

The motor starter protectors are approved for installation altitudes up to 2,000 m. The reduced air density at altitudes higher than 2,000 meters affects the motor starter protectors' electrical characteristics. The reduction factors which have to be taken into account when using motor starter protectors at altitudes higher than 2,000 m can be obtained on request on the Internet (https://support.industry.siemens.com/cs/de/en).

Operating conditions

3RV motor starter protectors are climate-proof. They are intended for use in enclosed spaces in which no severe operating conditions prevail (e.g. dust, caustic vapors, hazardous gases). If they are to be installed in dusty and damp spaces, suitable enclosures must be provided.

3RV motor starter protectors can optionally be fed from the top or from below.

Ambient temperatures/Derating

The permissible ambient temperatures, maximum switching capacity, tripping currents, and other limiting conditions relevant to application are listed in the technical data. Technical information is available on the Internet (https://support.industry.siemens.com/cs/de/en).

3RV1.11 and 3RV2 motor starter protectors are temperature-compensating according to IEC 60947-4-1 / VDE 0660 Part 102 in the temperature range from -20 °C to +60 °C.

At higher temperatures, a correction of the current value to be set is required. At the same time, the upper set value of the adjustment range must be reduced by a certain factor according to the tables below (derating factor for the upper set value).

Necessary correction

The following tables show the necessary correction of the rated motor current to which the motor starter protector is to be set on the setting scale.

Table 7- 35 Use at ambient temperatures > 60 °C[1)]

Ambient temperature in °C	Maximum continuous current in %	Necessary correction
-20 to +60	100	None
Up to +65	[3)]	1.1 x Ie motor[2)]
Up to +70	[3)]	1.1 x Ie motor[2)]

1) The service life (the T1 value/duration) may be reduced when operating at ambient temperatures > 60 °C

2) Correction only permissible up to highest set value

3) For reduction see "Ambient temperatures for 3RV2 motor starter protectors" tables

Derating factor for the upper set value

Table 7- 36 Ambient temperatures for 3RV1.11 and 3RV2 motor starter protectors (size S00 / S0)

Ambient temperature in °C	Reduction factor for the upper set value applies to ...	
	Rated current 0.16 to 20 A	Rated current 22 to 32 A
+60	1.0	1.0
+65	0.94	0.97
+70	0.87	0.94

In accordance with the table, the derating factor is 13% at 70 °C. This factor is so low that due to the overlapping of the current setting ranges there are no gaps before the next setting range. This means that the available current range spans from 0.11 A to 30.1 A at 70 °C.

Note

Ambient temperatures for size S0 motor starter protectors (36 A and 40 A)

The 36 A and 40 A variants in size S0 are compatible for use in ambient temperatures up to a maximum of 40° C.

Table 7- 37 Ambient temperatures for 3RV2 motor starter protectors (size S2)

Ambient temperature in °C	Reduction factor for the upper set value applies to ...
	Rated current 14 to 80 A
+60	1
+65	0.93
+70	0.87

In accordance with the table, the derating factor is 13% at 70 °C. This factor is so low that due to the overlapping of the current setting ranges there are no gaps before the next setting range. This means that at 70 °C the available current range spans from 9.5 A to 69.6 A.

Table 7- 38 Ambient temperatures for 3RV2 motor starter protectors (size S3)

Ambient temperature in °C	Reduction factor for the upper set value applies to ...
	Rated current 40 ... 100 A
+60	1
+65	0.93
+70	0.87

In accordance with the table, the derating factor is 13% at 70 °C. This factor is so low that due to the overlapping of the current setting ranges there are no gaps before the next setting range. This means that at 70 °C, the available current range goes from 28 A to 87 A.

Operation of the 3RV2 motor starter protectors at temperatures down to -50 °C

In sizes S00, S0 and S2, special variants of the 3RV2 motor starter protectors are available that can be used down to -50 °C. In the case of these special variants, the article number is supplemented with "-0BA0" at positions 13 to 16. (e.g. 3RV2021-4DA10-0BA0).
These versions have a limited mechanical service life:

- Sizes S00 / S0: 500 mechanical operating cycles
- Size S2: 250 mechanical operating cycles

UL / CSA derating table

3RV2.3 (size S2)	Surrounding Air Temperature 40 °C	Ambient Temperature 40 °C
80 A	80 A	--
73 A	73 A	--
65 A	65 A	--
59 A	59 A	--
≤ 52 A	52 A	52 A

Special application environments

SIRIUS components have been approved by a whole range of bodies for various sectors (shipbuilding, etc.). An up-to-date list of approvals appears in the Appendix of the Siemens Industrial Controls IC 10 Catalog. More information, as well as downloadable certificates, can be obtained on the Internet (https://support.industry.siemens.com/cs/de/en).

7.16 Selecting the motor starter protectors

Since the inrush current can cause the operational currents, the starting currents, and the current peaks to be at different levels, even where motors with the same power are being used, the motor power values in the selection tables should be viewed as guide values only. The actual starting characteristics and rated data of the motor to be protected are always the decisive factors in selecting the right motor starter protectors. The same applies for motor starter protectors to be used for transformer protection.

Explosion protection

Note

In the case of 2- and 3-pole loading, the permissible deviation of the tripping time with 300% to 800% current setting is up to ± 20% maximum and as such meets the requirements of DIN VDE 0165 and EN 50019.

The 3RV10 and 3RV20 circuit breakers for motor protection, Class 10 have ATEX approval according to EU Directive 2014/34/EU (DMT certificate) and IECEx-approval according to IEC 60079.

3RV1011 and 3RV20 motor starter protectors are suitable for the overload protection of explosion-proof motors with "increased safety" type of protection EEx e.
The 3RV1011 and 3RV20 motor starter protectors are not intended for installation in hazardous areas.

7.17 Project guidelines for use downstream of frequency converters/inverters with pulsed voltage

Using thermal motor protection devices downstream of frequency converters/inverters with pulsed voltage affects switching devices and can cause them to trip undesirably. Practical configuration guidelines for such applications are given below.

7.17.1 Effects of high-frequency currents on the thermal overload release (size S00 to S2)

The thermal overload release on motor starter protectors and overload relays usually comprises a bimetal and a heating coil through which the motor current flows, causing heat rise. Excessive deflection of the bimetal (caused by the motor current being too high) will cause the motor current to be disconnected.

Releases of this type are adjusted with a 50 Hz alternating current. As such, the tripping point will only be in the required normal range range for currents whose effective heat value is the same as or similar to this adjustment current. This is the case for alternating currents from 0 to 400 Hz and for direct currents.

Where high-frequency currents such as those occurring downstream of converters are concerned, there is additional heat rise of the bimetal. This can be attributed on the one hand to eddy currents induced by harmonics and on the other to the skin effect in the heating coil. Both cause the overload release to trip, even at reduced currents (undesirable premature tripping!).

The effects are dependent upon the frequency of the current. The higher the frequency of the converter and the lower the setting range/rated current, the more the tripping current will drop.

To return the tripping limits to the normal range, the setting of the overload release has to be corrected. The following table shows the adjustment correction factors for the various setting ranges dependent upon the converter's pulse frequency.

Table 7- 39 Adjustment correction factors for different setting ranges

Setting range/rated current	Pulse frequency [kHz]								
	0	2	4	6	8	10	12	14	16
0.16 ... 0.25 A (sizes S00, S0)	1.00	1.10	1.17	1.24	1.28	1.33	1.38	1.42	1.46
0.32 ... 0.4 A (sizes S00, S0)	1.00	1.09	1.15	1.21	1.25	1.29	1.33	1.35	1.37
0.5 ... 2.5 A (sizes S00, S0)	1.00	1.08	1.13	1.17	1.21	1.24	1.26	1.28	1.29
3.2 ... 40 A (sizes S00, S0)	1.00	1.07	1.12	1.16	1.18	1.19	1.21	1.22	1.23
14 ... 80 A (size S2)	1.00	1.07	1.12	1.16	1.18	1.19	1.21	1.22	1.23

Note

On devices of size S3, there is no effect on the thermal release.

Application example

rms value of the motor current at rated load: 1.2 A. Frequency converter with a pulse frequency of 8 kHz.
Set to: 1.2 A x 1.21 = 1.45 A
Recommended motor starter protector with setting range: 1.4 to 2 A.

Making this adjustment compensates the high-frequency currents. The tripping current is in the normal range.

Note

Harmonics

The harmonics can cause the rms value of the motor current to be higher than the motor rated current. In such cases, undesirable tripping can occur in spite of a correction being made.

To rectify the situation, the rms value of the motor current has to be determined at rated load and used as the base current for the correction described above. Only measuring instruments which are able to reproduce the true rms value up to the prevailing frequencies are suitable for determining the values. Good examples include hot-wire instruments. Although moving-iron measuring instruments are in principle also rms instruments, they can only be used for frequencies up to 1 kHz and, therefore, are not compatible with the majority of the scenarios described above. Commercially available multimeters or clip-on ammeters are generally not suitable for taking measurements in these cases.

7.17.2 Capacitive leakage currents

Despite adjustment correction undesirable tripping can occur in individual systems. Extensive tests have shown that in systems with pulsed voltages other effects can transpire which reduce the tripping current of the overload release or increase the current flowing through the release.

Practical example

In a system supplied by an inverter with a 3 kHz pulse frequency, the motors are connected with cables measuring 80 m in length. An analysis of the actual current flow shows that very high-frequency currents (up to 150 kHz) are superimposed on the motor current with a peak value of 1.5 A. In the case of these frequencies, the effect on the thermal overload release is significantly greater than described in Effects of high-frequency currents on the thermal overload release (size S00 to S2) (Page 111). Furthermore, capacitive leakage currents occur in this system due to the cable length and the high frequency. These increase the current flowing through the release and cause undesirable tripping.

An alternative approach is described below for cases in which high-frequency currents significantly higher than 16 kHz occur and the procedure described in Effects of high-frequency currents on the thermal overload release (size S00 to S2) (Page 111) no longer rectifies the problem. When the motor is operating without overload, the overload release has to be set so high that it will not trip. Once the motor has been running for approx. 1.5 hours at full load, the overload release has to be reduced to the tripping limit and then this limit set value has to be increased by approx. 10%. This compensates the effects on the system. The value hereby obtained can also be used as the correction factor for similar systems.

7.17.3 Speed control of motors with characteristic-controlled frequency converters

With adjustment to linear voltage frequency characteristic and continuous boost, a reduction in speed (< 50 Hz) combined with constant load torque can cause the motor current to increase. The reason for this is that in the case of this adjustment the reduction in the output voltage of the frequency converter is not in line with the output frequency.

Should this lead to undesirable tripping, and if this cannot be compensated by adjusting this release to a higher value (taking the motor overload into account), minimizing boost or switching to a quadratic voltage frequency characteristic may provide a remedy.

Mounting

8

8.1 Warning notice

DANGER

Hazardous voltage. Will cause death or serious injury.

Turn off and lock out all power supplying this device before working on this device.

8.2 Standard mounting

8.2.1 Minimum clearances and mounting position

Minimum clearances

The following clearances from grounded or non-isolated live parts and from cable ducts made of molded plastic must be observed in compliance with IEC 60947-2 when motor starter protectors are mounted.

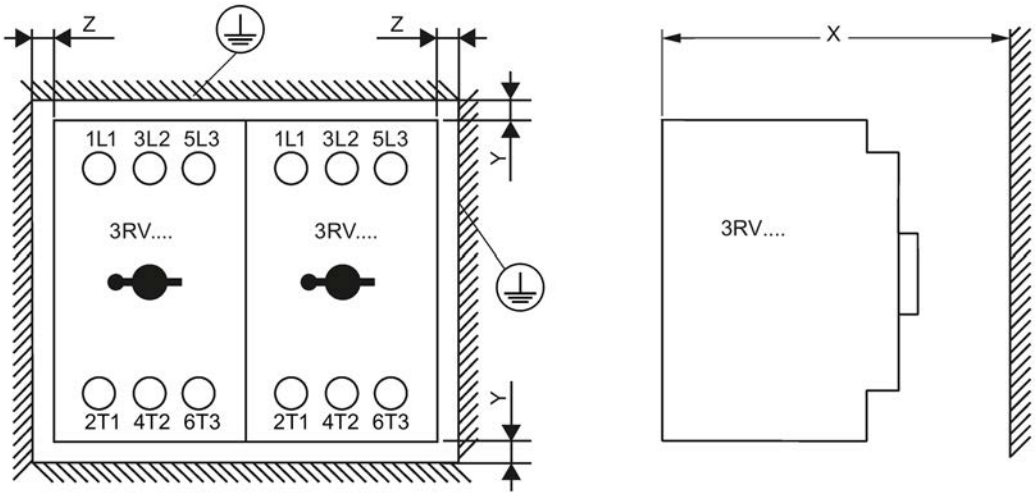

Figure 8-1 Clearances from grounded or live parts

Table 8- 1 Installation guidelines for 3RV2 motor starter protectors (size S00 / S0)

U_e [V]	X [mm]	Y [mm]	Z [mm]
240	90	30	9
400	90	30	9
440	90	30	9
500	90	30	9
690	90	50 / 70[1)]	30

1) Up to and including the setting range of 32 A, the required clearance above and below is 50 mm; for the 36 / 40 A setting range, the clearance is 70 mm.

Note

Terminal block type E

In conjunction with the type E terminal block 3RV2928-1H the applicable lateral clearance is 30 mm for all voltages.

Table 8- 2 Installation guidelines for 3RV1.1 / 3RV161 motor starter protectors (size S00)

U_e [V]	X [mm]	Y [mm]	Z [mm]
Up to 690	70	20	9

Table 8- 3 Installation guidelines for motor starter protectors (size S2)

U_e [V]	X [mm]	Y [mm]	Z [mm]
240	140	50	10
400	140	50	10
440	140	50	10
500	140	50	10
690	140	50	10

No distance from grounded parts needs to be observed on the front.

Table 8- 4 Installation guidelines for 3RV2 motor starter protectors (size S3)

U_e [V]	X [mm]	Y [mm]	Z [mm]
240	167	50	10
400	167	70	10
440	167	70	10
500	167	110	10
690	167	150	30

No distance from grounded parts needs to be observed on the front.

Mounting position

The mounting position of 3RV1 and 3RV2 motor starter protectors can be selected at will.

8.2.2 Mounting/Disassembly

Installation options

The motor starter protectors are mounted as follows:

- Snapping onto a 35 mm DIN rail according to DIN EN 60715
- Screwed onto a baseplate

Mounting/disassembling (sizes S00 and S0)

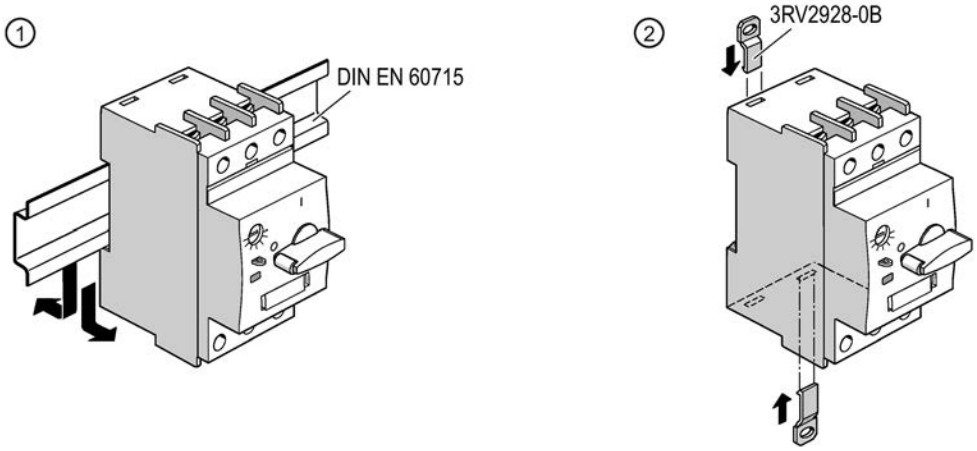

① Mounting on a DIN rail

② Mounting on base plate

Figure 8-2 Mounting/disassembling motor starter protectors (sizes S00 and S0)

Note

Push-in lugs (sizes S00 and S0)

The motor starter protectors can be mounted on a level surface with 2 screws. In the case of size S00 and S0 motor starter protectors, 2 push-in lugs (3RV2928-0B) (supplied in packs of 10) are also required.

Mounting/disassembling (size S2)

The following figure shows the mounting of motor starter protectors (size S2) on a base plate.

Screw mounting motor starter protectors (size S2)

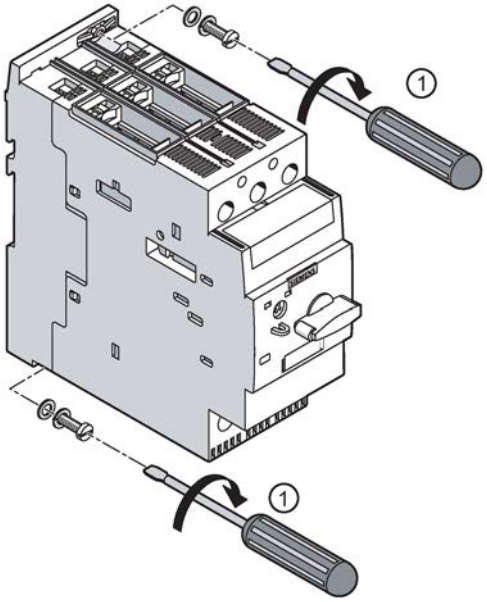

① Using two M4 screws (maximum tightening torque 1.2 to 1.4 Nm), plain washers, and spring washers, diagonally screw the motor starter protector tight into the designated drill holes.

The following figures show snapping onto/removal from DIN rail (size S2).

Snapping motor starter protectors (size S2) onto DIN rail

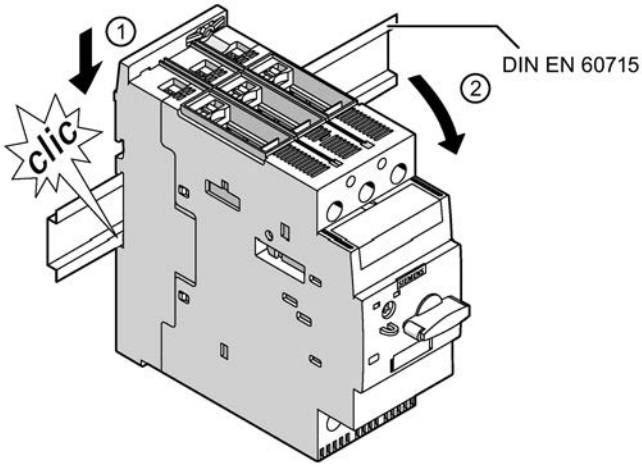

① Position the device on the top edge of the DIN rail.

② Press the device down until it snaps onto the bottom edge of the rail.

Removing motor starter protectors (size S2) from DIN rail

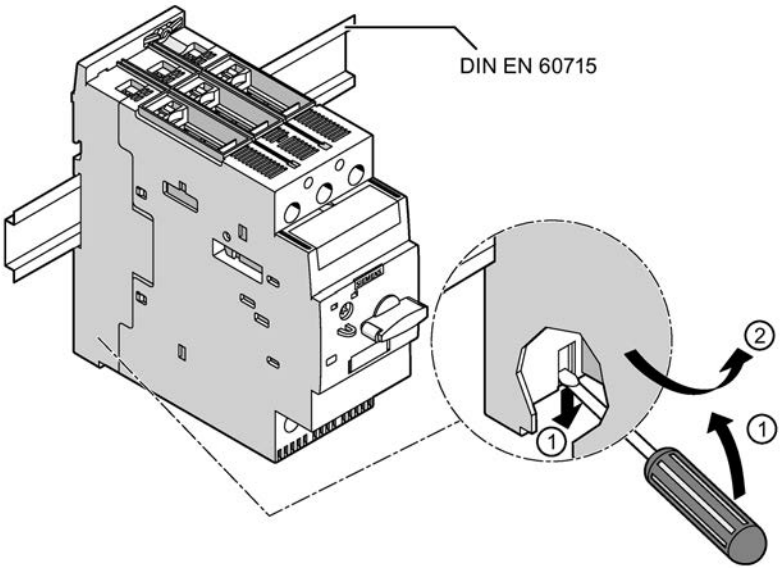

① Push the release slide down with a screwdriver to enable its removal.

② Swing the device upwards to remove it.

Mounting / disassembling (size S3)

The following figure shows the mounting of motor starter protectors (size S3) on a base plate.

Screw mounting motor starter protectors, size S3

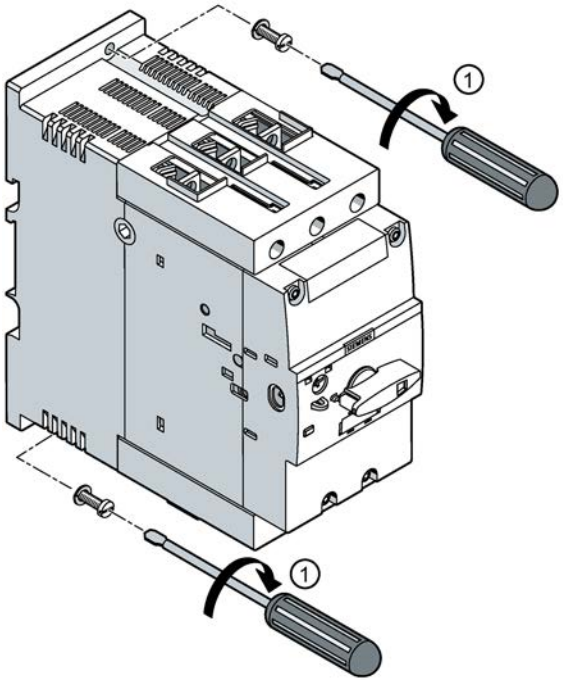

① Using two M4 screws (maximum tightening torque 1.2 to 1.4 Nm) and plain washers, diagonally screw the motor starter protector tight into the designated drill holes.

The following figures show mounting on / removal from standard rails (size S3).

Mounting motor starter protectors (size S3) on standard rails

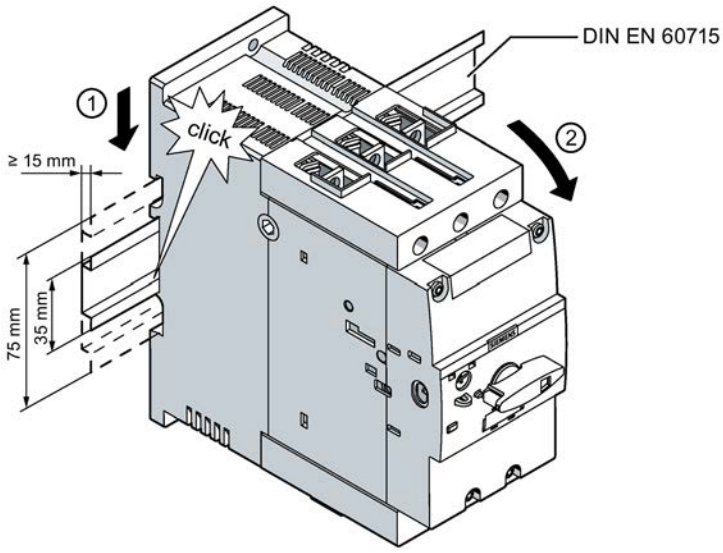

① Position the device on the top edge of the DIN rail.

② Press the device down until it snaps onto the bottom edge of the rail.

Removing motor starter protectors (size S3) from standard rails

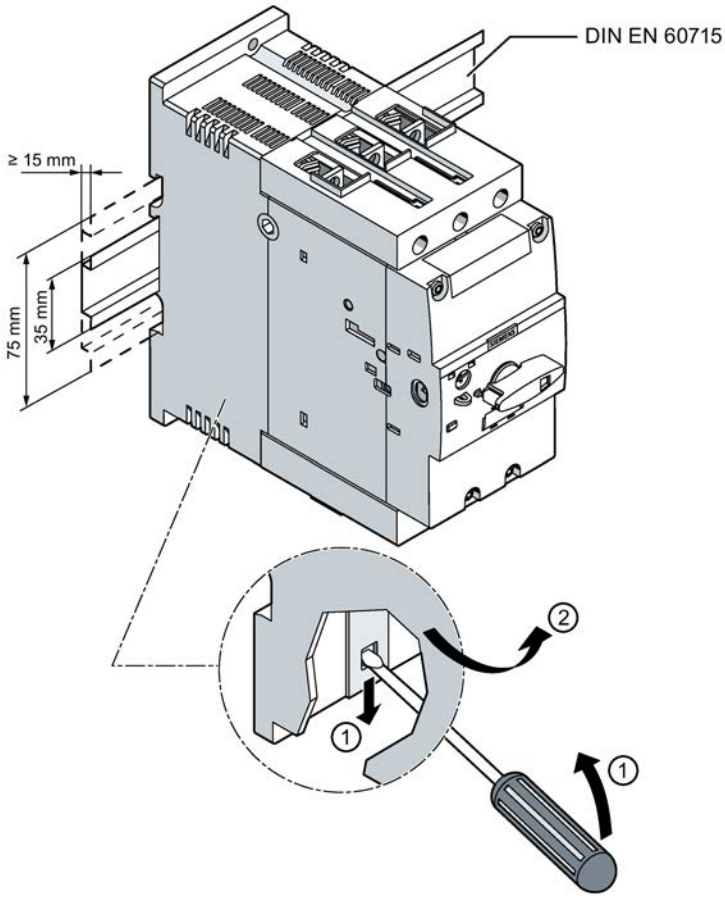

① Push the release slide down with a screwdriver to enable its removal.

② Swing the device upwards to remove it.

Reference

More information ...	Can be found in the chapter titled ...
About the drilling plan	Dimension drawings for 3RV2 motor starter protectors (Page 286)

8.3 Mounting in limiter circuit

Installation guidelines for 3RV2 motor starter protectors with limiter function (size S00 and S0)

When installing 3RV2 motor starter protectors, size S00 and S0, the following clearances must be observed from grounded or non-isolated live parts, and from cable ducts made from insulating material.

Table 8- 5 Minimum clearances for 3RV2321-4EC10 and 3RV2.1./3RV2.2.

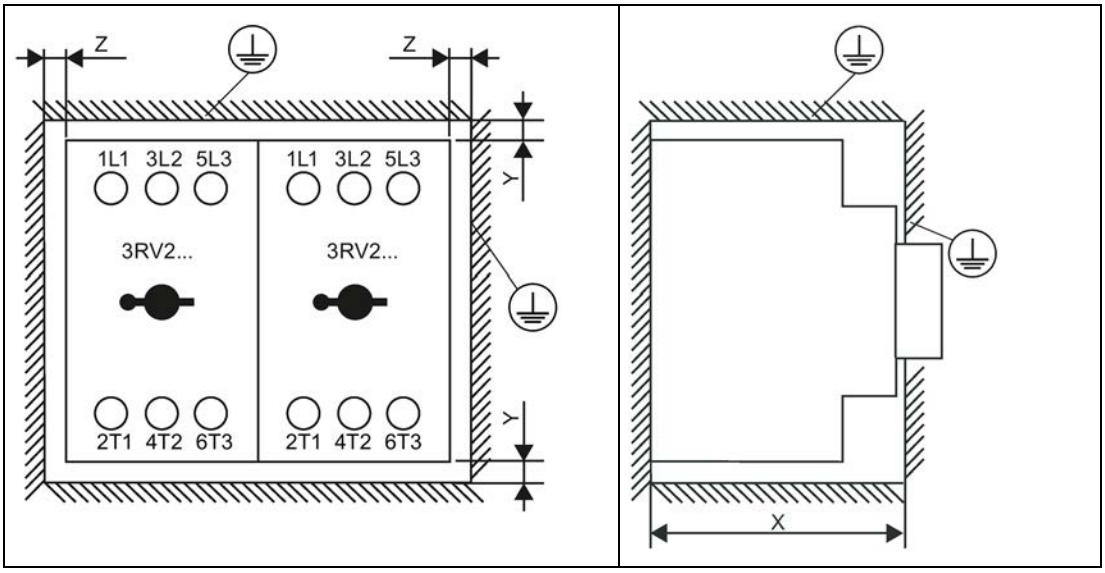

Table 8- 6 Minimum clearances for 3RV2331-4WC10 and 3RV2.1. / 3RV2.2.

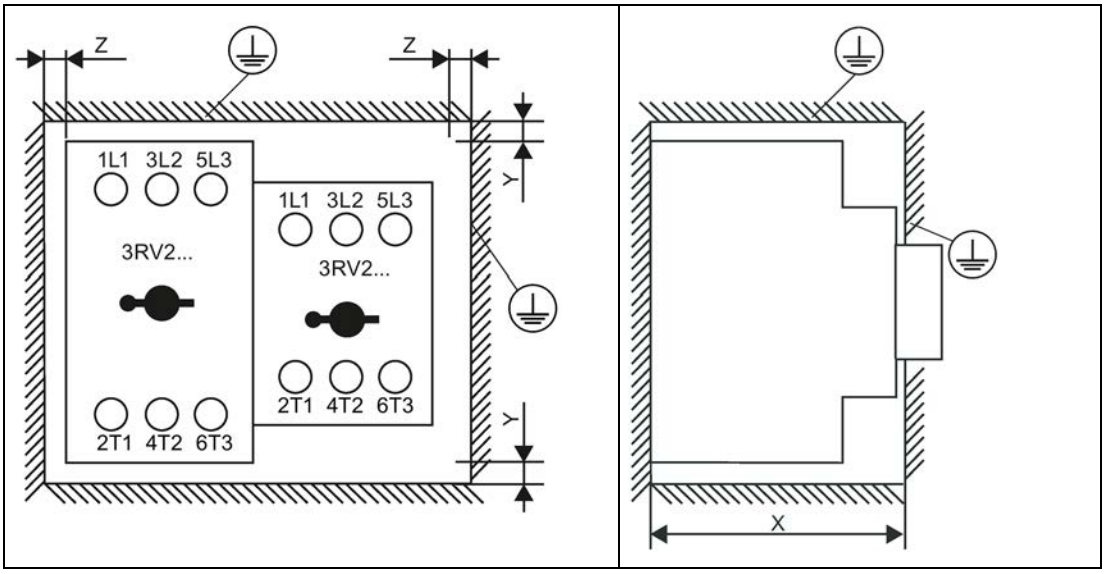

Type			Clearance		
Limiter	**Motor starter protector**	**Ue [V]**	**X [mm]**	**Y [mm]**	**Z [mm]**
3RV2321-4EC10	3RV2.1./3RV2.2.	500	90	40	10
		690	90	60	30
3RV2331-4WC10	3RV2.1./3RV2.2.	690	140	50	10

Installation guidelines for 3RV2 motor starter protectors with limiter function (size S2)

When installing 3RV2 motor starter protectors, size S2, the following clearances must be observed from grounded or non-isolated live parts, and from cable ducts made from insulating material.

Minimum clearances for 3RV2332-4RC10 and 3RV2.3

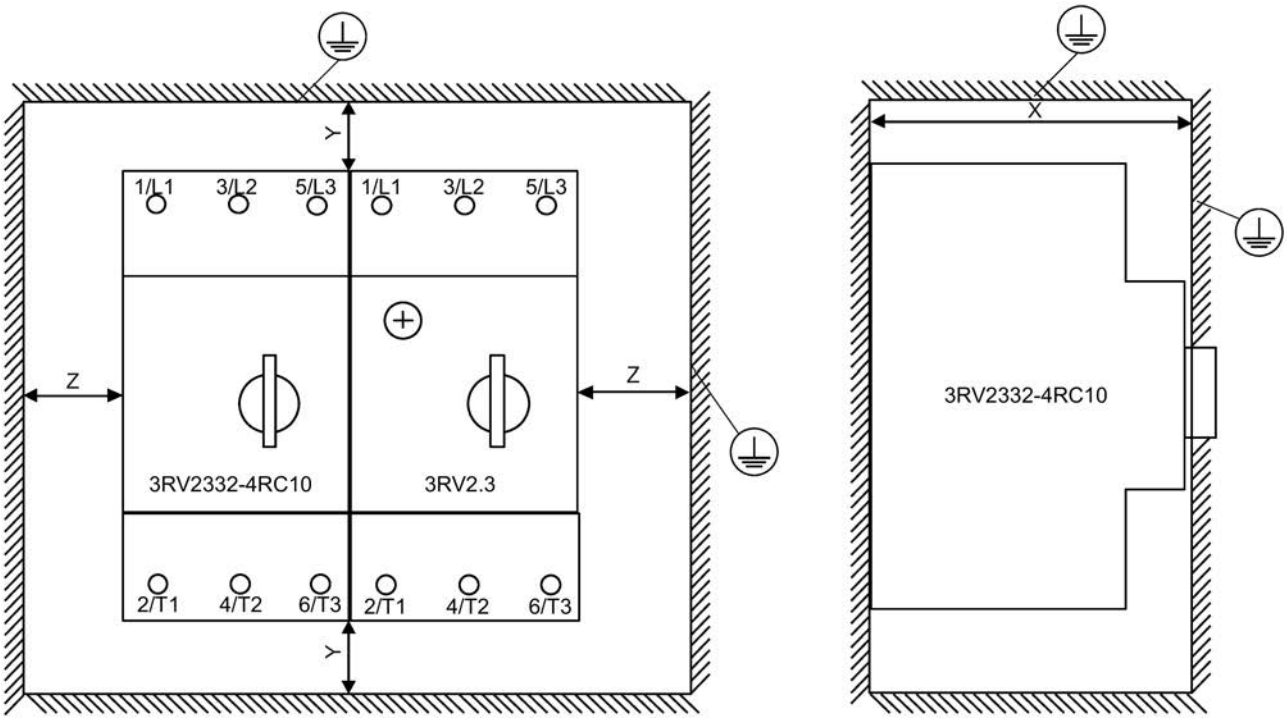

Type			Clearance		
Limiter	**Motor starter protector**	**Ue [V]**	**X [mm]**	**Y [mm]**	**Z [mm]**
3RV2332-4RC10	3RV2.3.	500	140	50	10
		690	140	50	10

Note

At rated operational voltages greater than 500 V AC, 3RV2938-1K phase barriers are required on the infeed side of the limiter.

Installation guidelines for 3RV2332-4RC10 and 3RV2.3 (I_n = 14 to 52 A)

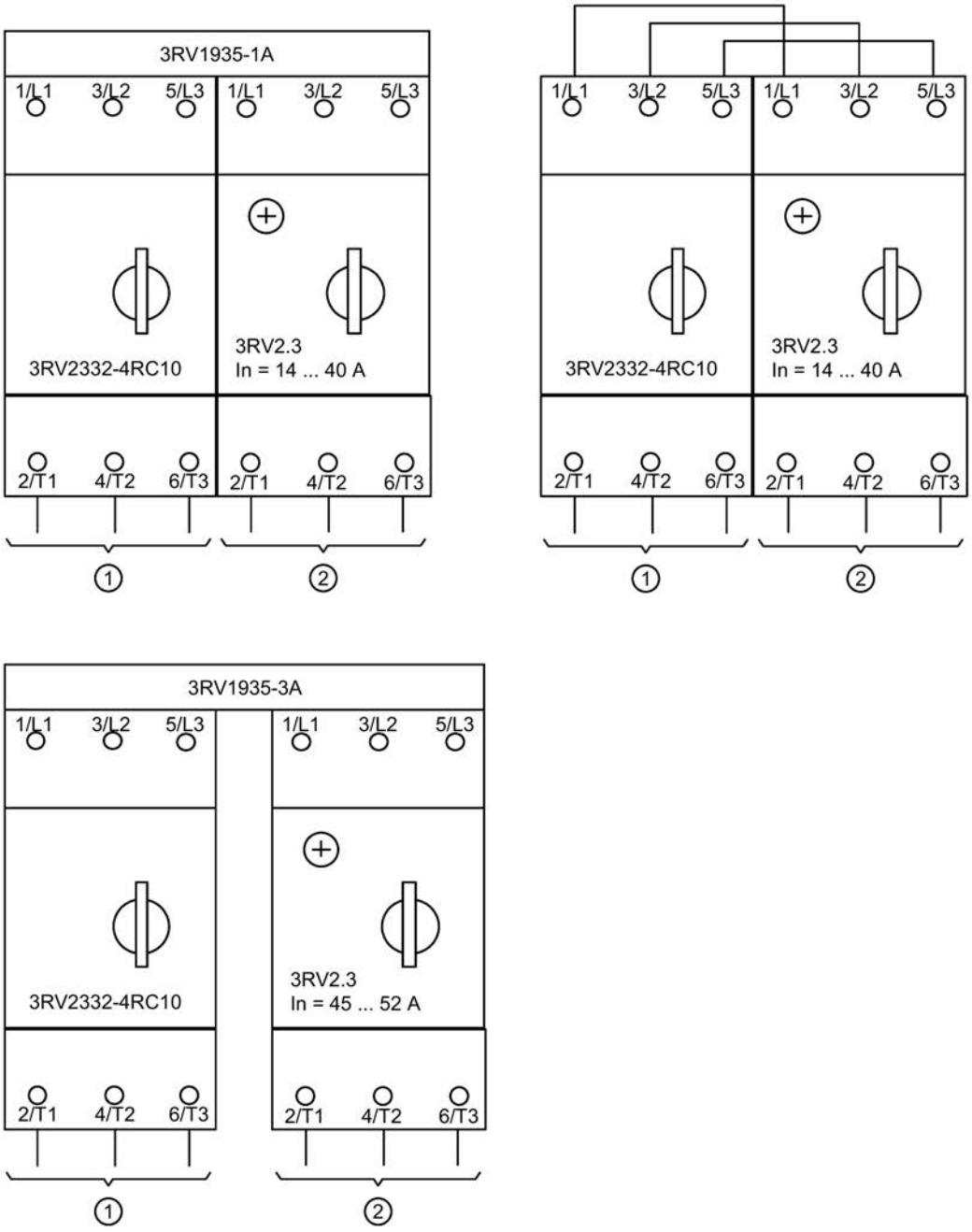

① Infeed side
② Load side

Installation guidelines for 3RV2332-4RC10 and 3RV2.3 (I_n = 59 to 80 A)

Note

All dimensions are specified in mm.

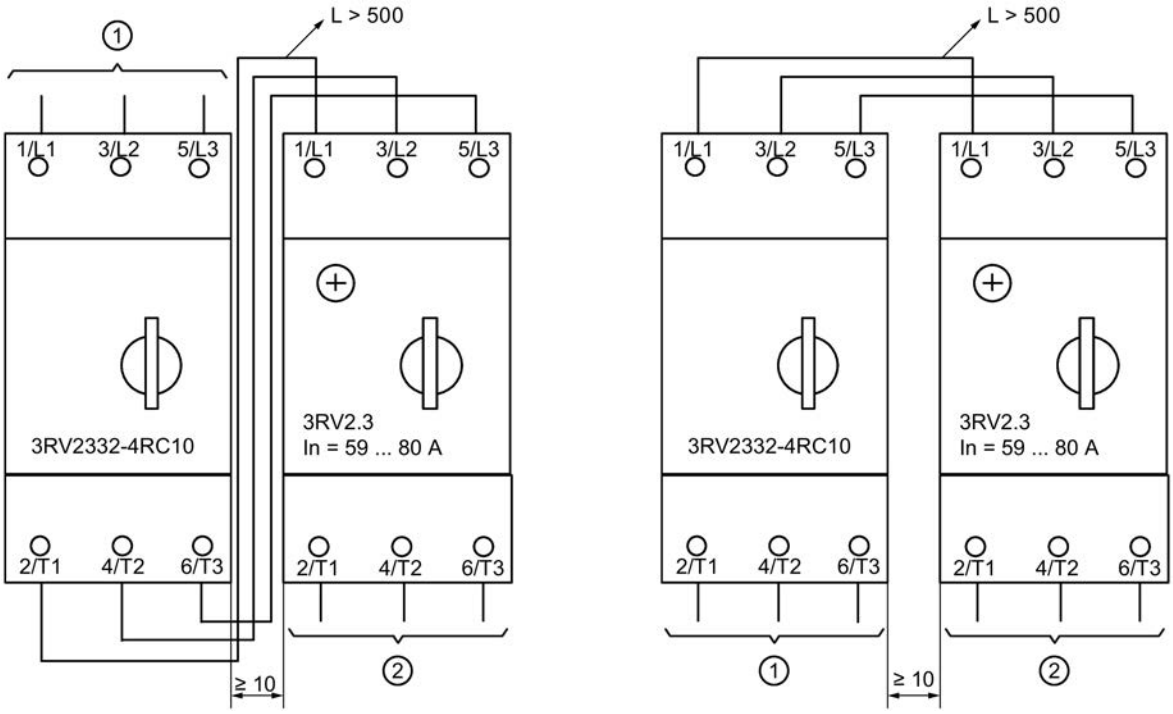

① Infeed side

② Load side

Installation guidelines for 3RV2 motor starter protectors with limiter function (size S3)

When installing 3RV2 motor starter protectors, size S3, the following clearances must be observed from grounded or non-isolated live parts, and from cable ducts made from insulating material.

Minimum clearances for 3RV2342-4MC1. and 3RV2042-4.A1.

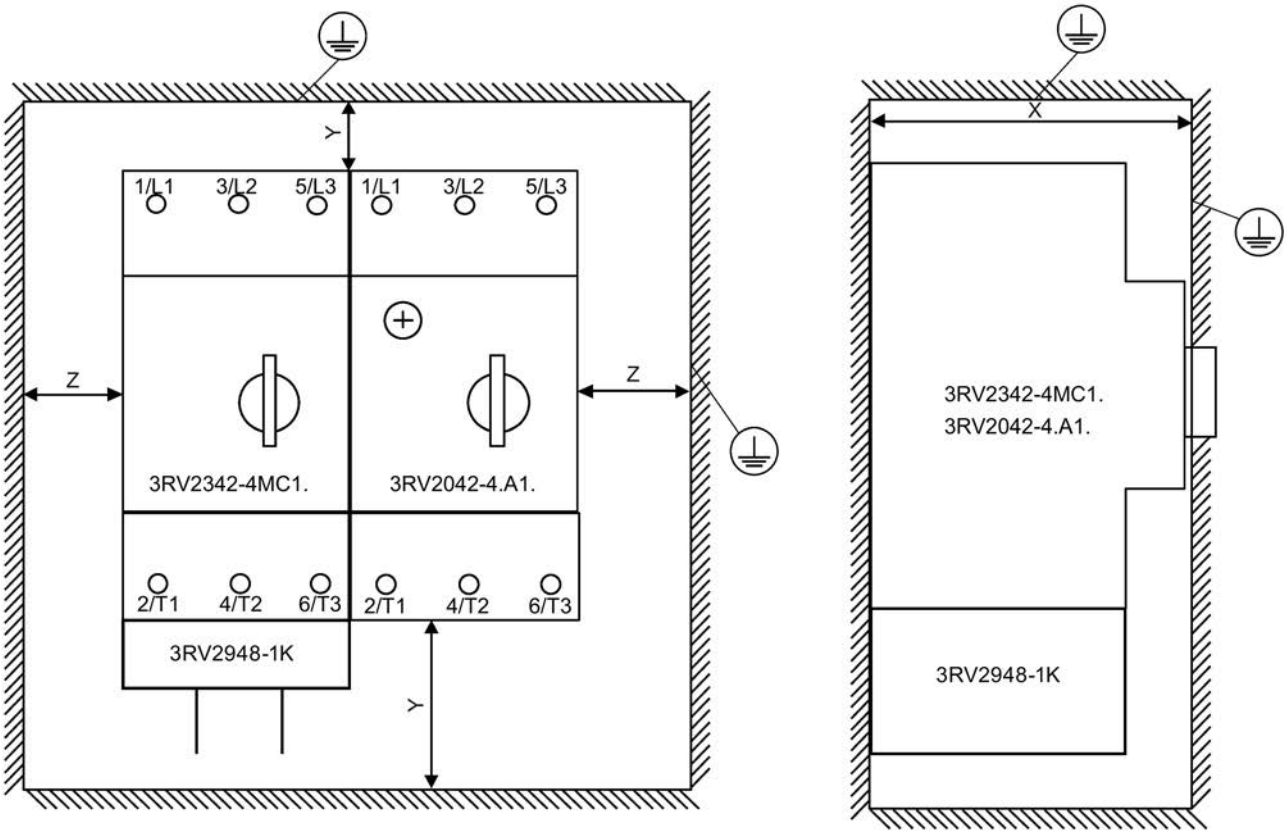

Type			Clearance		
Limiter	**Motor starter protector**	**Ue [V]**	**X [mm]**	**Y [mm]**	**Z [mm]**
3RV2342-4MC1.	3RV2042-4.A1.	500	162	170	20
		690	162	220	30

Note

At a rated operational voltage greater than 400 V AC, 3RV2948-1K phase barriers are required on the infeed side of the limiter.

Installation guidelines for 3RV2342-4MC1. and 3RV2042-4.A1. (I_n = 28 to 100 A)

Note

All dimensions are specified in mm.

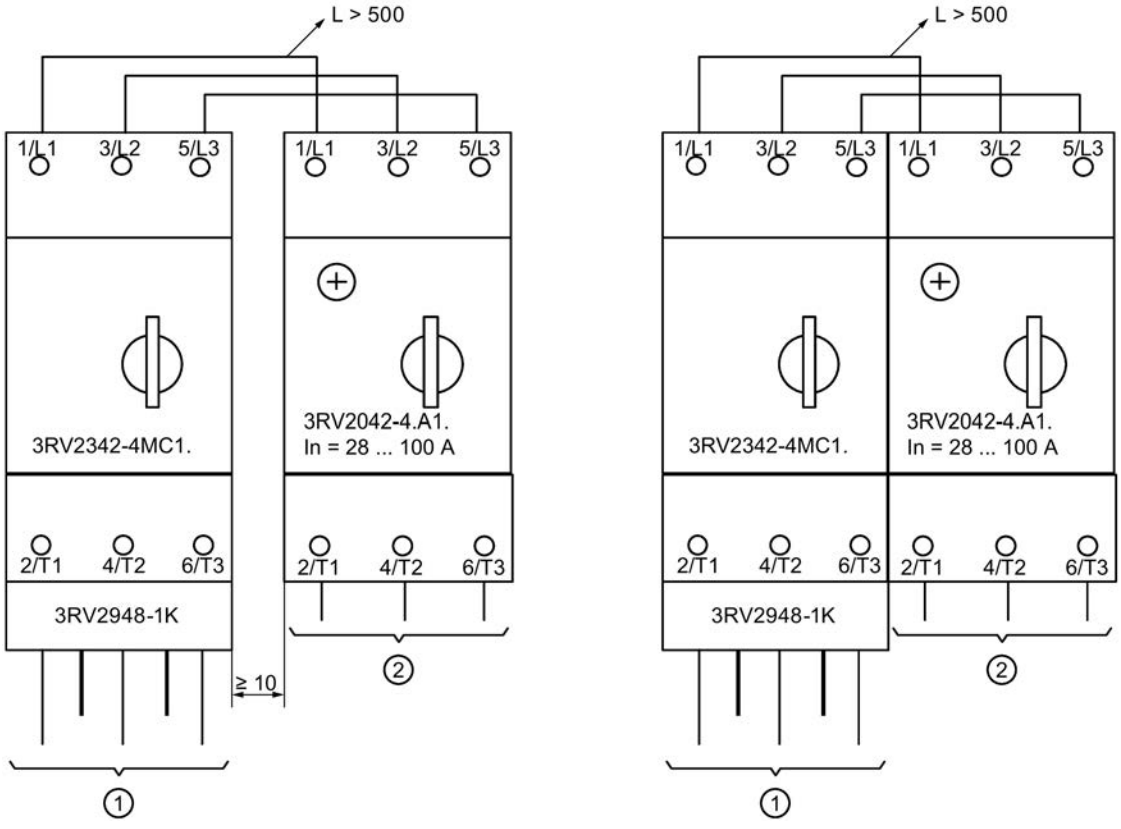

① Infeed side

② Load side

Derating table			Mounting variant Maximum permissible rated current I_e [%]	
Limiter	**Motor starter protector**	**Setting range [A]**	**Side-by-side design**	**Clearance between motor starter protectors 10 mm**
3RV2342-4MC1.	3RV2042-4FA1.	28 ... 40	100	100
	3RV2042-4HA1.	36 ... 50	100	100
	3RV2042-4JA1.	45 ... 63	100	100
	3RV2042-4KA1.	57 ... 75	100	100
	3RV2042-4RA1.	65 ... 84	100	100
	3RV2042-4YA1.	75 ... 93	95	96
	3RV2042-4MA1.	80 ... 100	95	96

Connection 9

9.1 Warning notice

DANGER

Hazardous voltage. Will cause death or serious injury.

Turn off and lock out all power supplying this device before working on this device.

Infeed

3RV motor starter protectors can optionally be fed from the top or from below.

Connection types

The motor starter protectors are available with the following connection types:

- Screw-type connection system
- Spring-loaded connection system (3RV2 only, in sizes S00 and S0 up to 32 A)
- Ring cable lug connection system (3RV2 only, in size S3)

Connection of terminals

Within the SIRIUS modular system, the conductor cross-sections are matched to one another dependent upon size.

Reference

More information ...	Can be found ...
About connecting the SIRIUS modular system	In the "References" appendix under "Manuals - SIRIUS Modular System (Page 280)".
About conductor cross-sections and tightening torques	In the chapter entitled "Technical data (Page 269)".

9.2 Conductor cross-sections

9.2.1 Conductor cross-sections

Due to SIRIUS being a modular system, the conductor cross-sections of all the devices of one size are identical.

9.2.2 Conductor cross-sections for screw-type connection systems

Conductor cross-sections for screw-type connection systems

The tables below define the permissible conductor cross-sections for main terminals and auxiliary conductor connections in sizes S00, S0, S2 and S3 for screw-type connection systems.

Table 9- 1 Main conductors of size S00 with M3 combination screws (3RV1.1 motor starter protector)

Motor starter protector						
Tool		Pozidriv size PZ 2, ∅ 5 ... 6 mm				
Tightening torque		0.8 - 1.2 Nm				
				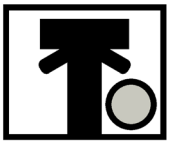	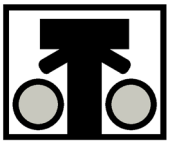	
			Left	Right	Left	Right
IEC mm²	Solid	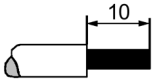	1 x (0.75 ... 4)	1 x (0.75 ... 4)	1 x (0.75 ... 2.5) 1 x (4)	1 x (0.75 ... 2.5) 1 x (4)
	Stranded	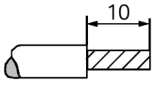	1 x (0.75 ... 4)	1 x (0.75 ... 4)	1 x (0.75 ... 2.5) 1 x (4)	1 x (0.75 ... 2.5) 1 x (4)
	Finely stranded without end sleeve	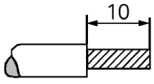	-	-	-	-
	Finely stranded with end sleeve	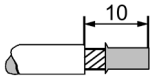	1 x (0.5 ... 2.5)	1 x (0.5 ... 2.5)	1 x (0.5 ... 1.5) 1 x (0.75 ... 2.5)	1 x (0.5 ... 1.5) 1 x (0.75 ... 2.5)
UL AWG/kcmil	Solid		1 x (18 ... 12)	1 x (18 ... 12)	1 x (18 ... 14) 1 x (12)	1 x (18 ... 14) 1 x (12)
	Stranded		1 x (18 ... 12)	1 x (18 ... 12)	1 x (18 ... 14) 1 x (12)	1 x (18 ... 14) 1 x (12)

Table 9- 2 Main conductors of size S00 with M3 combination screws (3RV2.1 motor starter protector[1])

Motor starter protector						
Tool		Pozidriv size PZ 2, Ø 5 ... 6 mm				
Tightening torque		0.8 - 1.2 Nm				
			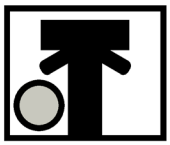	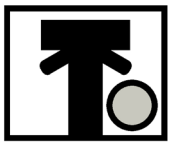	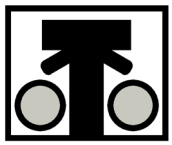	
			Left	Right	Left	Right
IEC mm²	Solid	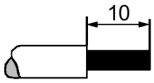	1 x (0.75 ... 4)	1 x (0.75 ... 4)	1 x (0.75 ... 2.5) 1 x (4)	1 x (0.75 ... 2.5) 1 x (4)
	Stranded	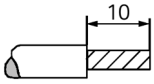	1 x (0.75 ... 4)	1 x (0.75 ... 4)	1 x (0.75 ... 2.5) 1 x (4)	1 x (0.75 ... 2.5) 1 x (4)
	Finely stranded without end sleeve	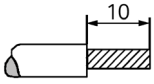	-	-	-	-
	Finely stranded with end sleeve	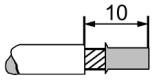	1 x (0.5 ... 2.5)	1 x (0.5 ... 2.5)	1 x (0.5 ... 1.5) 1 x (0.75 ... 2.5)	1 x (0.5 ... 1.5) 1 x (0.75 ... 2.5)
UL AWG/kcmil	Solid		1 x (18 ... 12)	1 x (18 ... 12)	1 x (18 ... 14) 1 x (12)	1 x (18 ... 14) 1 x (12)
	Stranded		1 x (18 ... 12)	1 x (18 ... 12)	1 x (18 ... 14) 1 x (12)	1 x (18 ... 14) 1 x (12)

[1)] The conductor cross-sections do not apply to the 3RV27 and 3RV28 devices.

Table 9- 3 Main conductors of size S0 with M4 combination screws (3RV2.2 motor starter protector[1])

Motor starter protector						
Tool		Pozidriv size PZ 2, ∅ 5 ... 6 mm				
Tightening torque		2.0 - 2.5 Nm				
				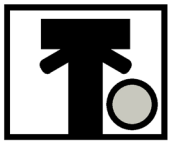	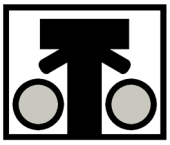	
			Left	Right	Left	Right
IEC mm²	Solid	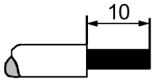	1 x (1 ... 10)	1 x (1 ... 10)	1 x (1 ... 2.5) 1 x (2.5 ... 10)	1 x (1 ... 2.5) 1 x (2.5 ... 10)
	Stranded	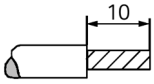	1 x (1 ... 10)	1 x (1 ... 10)	1 x (1 ... 2.5) 1 x (2.5 ... 10)	1 x (1 ... 2.5) 1 x (2.5 ... 10)
	Finely stranded without end sleeve	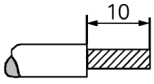	-	-	-	-
	Finely stranded with end sleeve	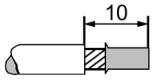	1 x (1 ... 10)	1 x (1 ... 10)	1 x (1 ... 2.5) 1 x (2.5 ... 6)	1 x (1 ... 2.5) 1 x (2.5 ... 6)
UL AWG/kcmil	Solid		1 x (16 ... 10)	1 x (16 ... 10)	1 x (16 ... 12) 1 x (14 ... 10)	1 x (16 ... 12) 1 x (14 ... 10)
	Stranded		1 x (16 ... 8)	1 x (16 ... 8)	1 x (16 ... 12) 1 x (14 ... 8)	1 x (16 ... 12) 1 x (14 ... 8)

[1] The conductor cross-sections do not apply to the 3RV27 and 3RV28 devices.

Table 9- 4 Main conductors of size S2 with box terminal (3RV2.31)

Motor starter protector						
Tool		Pozidriv size PZ 2, Ø 5 ... 6 mm				
Tightening torque		3.0 - 4.5 Nm				
			Top	Bottom	Top	Bottom
IEC mm²	Solid	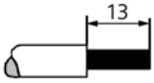	1 x (1 ... 16)	1 x (1 ... 16)	1 x (1 ... 16)	1 x (1 ... 16)
	Stranded	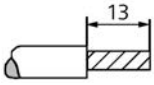	1 x (1 ... 35)	1 x (1 ... 35)	1 x (1 ... 25)	1 x (1 ... 25)
	Finely stranded without end sleeve	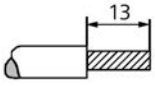	-	-	-	-
	Finely stranded with end sleeve	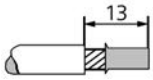	1 x (1 ... 25)	1 x (1 ... 25)	1 x (1 ... 16)	1 x (1 ... 16)
	Ribbon cables: Number x (width x thickness)		-	-	-	-
UL AWG/kcmil	Solid		1 x (18 ... 10)	1 x (18 ... 10)	1 x (18 ... 10)	1 x (18 ... 10)
	Stranded		1 x (18 ... 2)	1 x (18 ... 2)	1 x (18 ... 3)	1 x (18 ... 3)

Table 9- 5 Main conductors of size S2 with box terminal (3RV2.32)

Motor starter protector						
Tool		Pozidriv size PZ 2, ∅ 5 ... 6 mm				
Tightening torque		3.0 - 4.5 Nm				
			Top	Bottom	Top	Bottom
IEC mm²	Solid	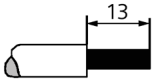	1 x (1 ... 16)	1 x (1 ... 16)	1 x (1 ... 16)	1 x (1 ... 16)
	Stranded	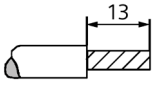	1 x (1 ... 50)	1 x (1 ... 50)	1 x (1 ... 35)	1 x (1 ... 35)
	Finely stranded without end sleeve	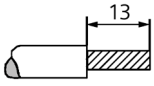	-	-	-	-
	Finely stranded with end sleeve	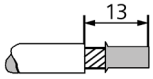	1 x (1 ... 35)	1 x (1 ... 35)	1 x (1 ... 25)	1 x (1 ... 25)
	Ribbon cables: Number x (width x thickness)		-	-	-	-
UL AWG/kcmil	Solid		1 x (18 ... 10)	1 x (18 ... 10)	1 x (18 ... 10)	1 x (18 ... 10)
	Stranded		1 x (18 ... 1)	1 x (18 ... 1)	1 x (18 ... 2)	1 x (18 ... 2)

Table 9- 6 Main conductors of size S3 with box terminal block (3RV2.4[1])

Motor starter protector						
Tool		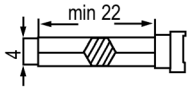 Allen key, 4 mm				
Tightening torque		4.5 - 6.0 Nm				
			Top	Bottom	Top	Bottom
IEC mm²	Solid	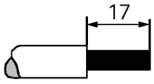	1 x (2.5 ... 16)	1 x (2.5 ... 16)	1 x (2.5 ... 16)	1 x (2.5 ... 16)
	Stranded	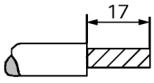	1 x (10 ... 70)	1 x (10 ... 70)	1 x (6 ... 16) 1 x (10 ... 50)	1 x (6 ... 16) 1 x (10 ... 50)
	Finely stranded without end sleeve	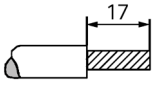	1 x (10 ... 50)	1 x (10 ... 50)	1 x (10 ... 35)	1 x (10 ... 35)
	Finely stranded with end sleeve	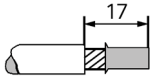	1 x (2.5 ... 50)	1 x (2.5 ... 50)	1 x (2.5 ... 35)	1 x (2.5 ... 35)
	Ribbon cables: Number x (width x thickness)		6 x (9 x 0.8)	6 x (9 x 0.8)	6 x (9 x 0.8)	6 x (9 x 0.8)
UL AWG/kcmil	Solid		1 x (10)	1 x (10)	1 x (10)	1 x (10)
	Stranded		1 x (10 ... 2)	1 x (10 ... 2)	1 x (10 ... 2)	1 x (10 ... 2)
	Mixed solid/stranded		-	-	Mixing is allowed	

[1] The conductor cross-sections do not apply to the 3RV27 devices.

Table 9- 7 Auxiliary conductors of sizes S00/S0/S2/S3 with M3 combination screws

		Accessories for motor starter protectors
Tool		Pozidriv size PZ 2, Ø 5 to 6 mm
Tightening torque		0.8 to 1.2 Nm
Solid	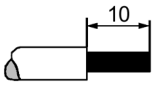	2 x (0.5 to 1.5) mm²
Stranded	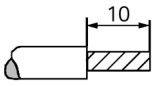	2 x (0.75 to 2.5) mm²
Finely stranded with end sleeve	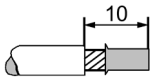	2 x (0.5 to 1.5) mm² 2 x (0.75 to 2.5) mm²
AWG		2 x (20 to 16) 2 x (18 to 14)

Reference

You can find more information on the conductor cross-sections of the 3RV27 and 3RV28 devices in the Technical data (Page 269) chapter.

9.2.3 Conductor cross-sections for spring-loaded connection systems

Conductor cross-sections for spring-loaded connection systems

The tables below define the permissible conductor cross-sections for main terminals and auxiliary conductor connections of the 3RV2 motor starter protectors (sizes S00 and S0) for spring-loaded connection technology.

Note

The main terminals of size S2 and S3 motor starter protectors are not available with spring-loaded connection technology.

Table 9- 8 Main conductors of size S00 (3RV2.1 motor starter protector)

Motor starter protector						
Tool		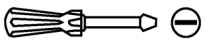 Ø 3.0 x 0.5 (3RA2908-1A)				
Tightening torque		-				
			Left	Right	Left	Right
IEC mm²	Solid	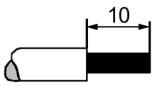	1 x (0.5 ... 4)	1 x (0.5 ... 4)	1 x (0.5 ... 4)	1 x (0.5 ... 4)
	Stranded	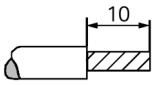	1 x (0.5 ... 4)	1 x (0.5 ... 4)	1 x (0.5 ... 4)	1 x (0.5 ... 4)
	Finely stranded without end sleeve	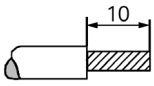	1 x (0.5 ... 2.5)	1 x (0.5 ... 2.5)	1 x (0.5 ... 2.5)	1 x (0.5 ... 2.5)
	Finely stranded with end sleeve	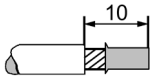	1 x (0.5 ... 2.5)	1 x (0.5 ... 2.5)	1 x (0.5 ... 2.5)	1 x (0.5 ... 2.5)
UL AWG/kcmil	Solid		1 x (20 ... 12)	1 x (20 ... 12)	1 x (20 ... 12)	1 x (20 ... 12)
	Stranded		1 x (20 ... 12)	1 x (20 ... 12)	1 x (20 ... 12)	1 x (20 ... 12)
	Mixed solid/stranded		-	-	Mixing is allowed	

Table 9- 9 Table 9-8 Main conductors of size S0 (3RV2.2 motor starter protector)

Motor starter protector						
Tool		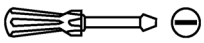 Ø 3.0 x 0.5 (3RA2908-1A)				
Tightening torque		-				
			Left	Right	Left	Right
IEC mm²	Solid	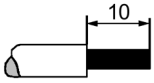	1 x (1 ... 10)	1 x (1 ... 10)	1 x (1 ... 10)	1 x (1 ... 10)
	Stranded	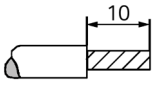	1 x (1 ... 10)	1 x (1 ... 10)	1 x (1 ... 10)	1 x (1 ... 10)
	Finely stranded without end sleeve	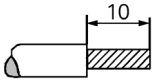	1 x (1 ... 6)	1 x (1 ... 6)	1 x (1 ... 6)	1 x (1 ... 6)
	Finely stranded with end sleeve	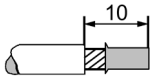	1 x (1 ... 6)	1 x (1 ... 6)	1 x (1 ... 6)	1 x (1 ... 6)
UL AWG/kcmil	Solid		1 x (18 ... 10)	1 x (18 ... 10)	1 x (18 ... 10)	1 x (18 ... 10)
	Stranded		1 x (18 ... 8)	1 x (18 ... 8)	1 x (18 ... 8)	1 x (18 ... 8)
	Mixed solid/stranded		-	-	Mixing is allowed	

Table 9- 10 Auxiliary conductors of size S00/S0/S2/S3

		Accessories for motor starter protectors
Tool	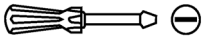	Ø 3.0 x 0.5 (3RA2908-1A)
Solid and stranded	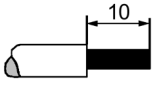	2 x (0.5 to 2.5) mm²
	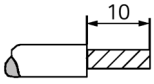	
Finely stranded without end sleeve	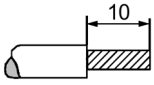	2 x (0.5 to 2.5) mm²
Finely stranded with end sleeve	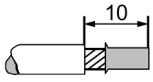	2 x (0.5 to 1.5) mm²
AWG		2 x (20 to 14)

9.2.4 Conductor cross-sections for ring cable lug connection system

Conductor cross-sections for ring cable lug connection systems (3RV2 only, in size S3)

The table below defines the permissible conductor cross-sections for main terminals and auxiliary conductor connections in size S3 for ring cable lug connection systems. When using ring cable lug connection technology, terminal 3RT2946-4GA07 must be removed in advance.

Table 9- 11 Main conductors of size S3 with M6 screws

		SIRIUS devices
Tool	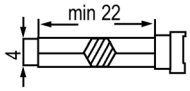	Allen key, 4 mm
Tightening torque		4.5 ... 6.0 Nm
Busbars (M6 x 25)		2 x 12 x 4
Ring cable lug[1)]	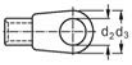	d_2 = min. 6.3 mm d_3 = max. 19.0 mm
Ring cable lug cover	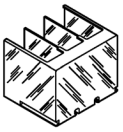	3RT1946-4EA1

[1)] The following ring cable lugs are approved for achieving the required clearances and creepage distances:

- For applications according to IEC 60947-1:
  - DIN 46237 (with insulating sleeve)
  - JIS CS805 type RAV (with insulating sleeve)
  - JIS CS805 type RAP (with insulating sleeve)
- For applications according to UL 60947-4-1 (UL 508):
  - DIN 46234 (without insulating sleeve)
  - DIN 46225 (without insulating sleeve)
  - JIS CS805 (without insulating sleeve)

A shrink-on sleeve must be used to insulate ring cable lugs without an insulating sleeve. The following conditions must be met:

- Operating temperature: -55 °C to +155 °C
- UL 224 approved
- Flame-protected

DANGER

Hazardous voltage. Will cause death or serious injury.

Use only approved ring cable lugs to meet the required clearances and creepage distances.
Use the ring cable lug covers supplied to achieve touch protection.

Operation

10

Note

The motor starter protector must be switched on and off quickly and without interruption.

10.1 Setting the current

Procedure

Use a screwdriver to set the load's rated current (current setting) I_e on the scale on the motor starter protector.

In the context of this setting, a distinction is made between two fundamental designs:

1. Stand-alone assembly: No directly mounted contactor and clearance of at least 10 mm to left and right.
2. Side-by-side design: Directly mounted contactor or clearance to left and right of less than 10 mm (commonly used design).

Note the two possible setting marks on the adjusting knob:

- Dash marking: Setting mark for the motor starter protector in stand-alone design.
- Triangular marking: Setting mark for the motor starter protector in side-by-side design.

In both cases, you can use the full current range up to the scale mark at the top for size S00, S0, S2 and S3 motor starter protectors at ambient temperatures of up to + 60 °C.

Note

Restrictions in the case of motor starter protectors 3RV2.21-4PA10 (30 to 36 A) and 3RV2.21-4FA10 (34 to 40 A) in size S0

In the case of motor starter protectors with 30 to 36 A and 34 to 40 A, the maximum permissible ambient temperature is 40 °C.

These motor starter protectors must not be operated side-by-side. A clearance of 9 mm at the side must be observed. Direct mounting of contactors with link module is not permitted.

The motor starter protectors with 30 to 36 A and 34 to 40 A have only one setting mark (= dash).

Set the relevant setting mark (dash or triangle) to the load current.

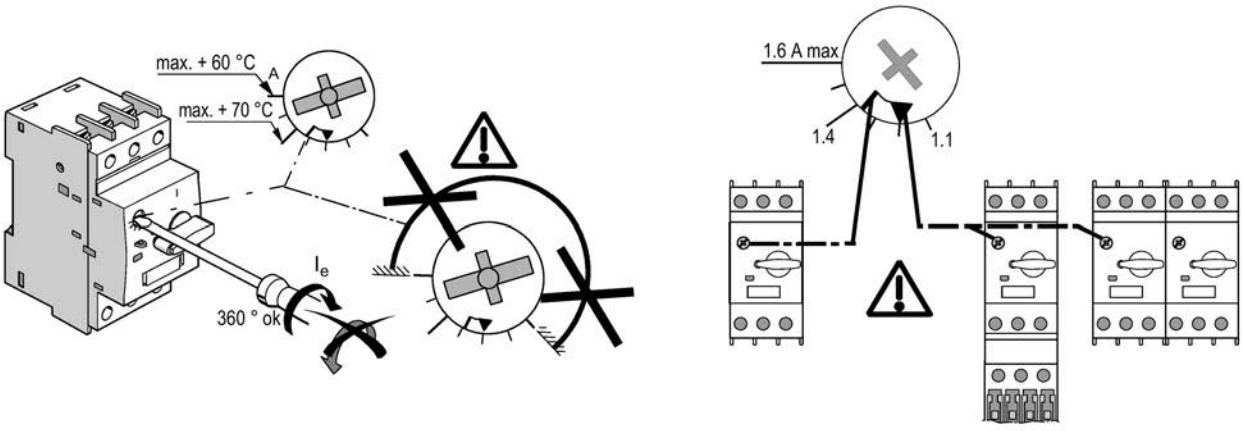

Figure 10-1 Making the current setting I_e

Current reduction

Current reduction is required at ambient temperatures above +60 °C. The maximum permissible current setting for an ambient temperature of +70 °C is indicated on the scale by a slightly longer mark on the scale. You can find more information about derating in the chapter titled Application environment (Page 106).

10.2 Testing the overload release

The tables below show the procedures for testing the motor starter protectors' overload release:

3RV1 motor starter protectors (size S00)

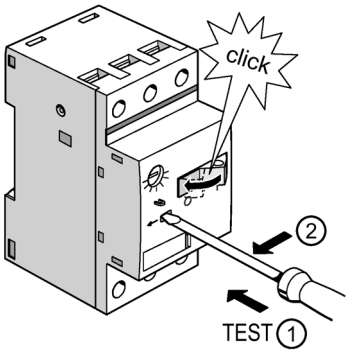

① Insert a screwdriver into the test opening.
② Push the screwdriver to the left.

3RV2 motor starter protectors (size S00 and S0)

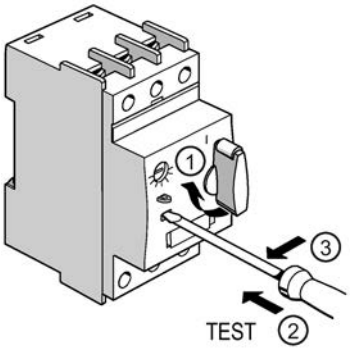

① Turn the rotary button from O to I.
② Insert a screwdriver into the test opening.
③ Push the screwdriver to the left.

3RV2 motor starter protectors (size S2 and S3)

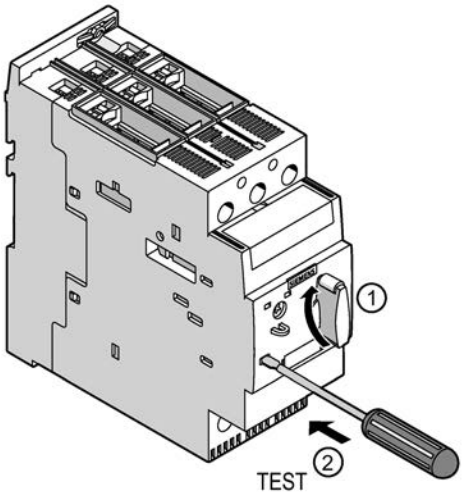

① Turn the rotary button from O to I.

② Insert a screwdriver into the test opening and carefully push it towards the back.

Result

If the rotary button on the 3RV2 motor starter protector snaps into the tripped setting, the test was successful.
If the toggle switch on the 3RV1 motor starter protector snaps into the O setting, the test was successful.

10.3 Testing the overload relay function (3RV21)

Testing the overload relay function (3RV21)

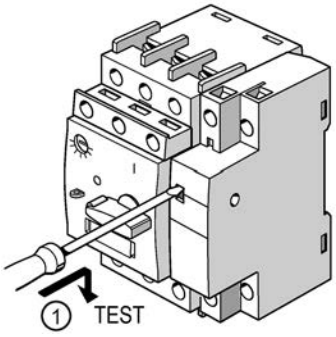

① The control circuit must be energized.
Insert a screwdriver into the test opening and push it down.

Result

The connected contactor disconnects.

10.4 Securing

Function

You can secure the motor starter protector against unauthorized closing, for example, if repair work needs to be carried out.

Procedure

Move the rotary switch to the OFF position. Take the cylinder out of the rotary lever. (This locks the rotary operating mechanism.) Secure the motor starter protector against unauthorized closing by locking the rotary switch with a padlock (shackle diameter 3.5 to 4.5 mm).

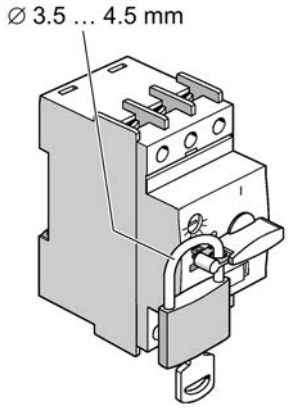

Figure 10-2 Securing the rotary switch (3RV2)

Move the toggle switch to the OFF position. Secure the motor starter protector against unauthorized closing by locking the toggle switch with a padlock (shackle diameter 3.5 to 4.5 mm).

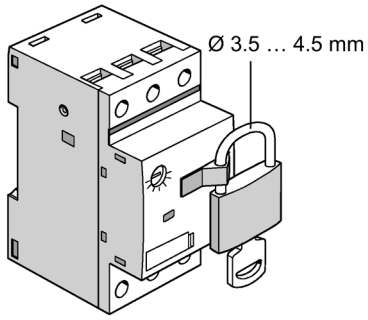

Figure 10-3 Securing the toggle switch (3RV1.1)

10.5 Reclosing after tripping

Tripping

When the 3RV2 motor starter protector trips, the rotary switch moves to the tripped setting to indicate that it has tripped. An option is available (in the form of an accessory) to have a signaling switch report the tripping of the 3RV2 motor starter protector electrically.

In the event of a trip, the 3RV1.1 motor starter protector goes to the "OFF" position to indicate that it has tripped.

Note

The signaling switch cannot be used for the 3RV1.1. motor starter protectors.

Reclosing (after remedying the cause of a fault/ascertaining the absence of faults)

Reclosing takes place directly on the switch. The rotary operating mechanism has to be set to O first before reclosing, to return the mechanism to readiness for operation (not on 3RV1.1 motor starter protectors). The motor starter protector can then be reclosed.

Accessories

11

11.1 Accessories overview

Accessories

For maximum flexibility, accessories can be added to the motor starter protector as required, easily, and without the need for tools.

Mountable accessories

The mountable accessories for size S00 3RV1011 motor starter protectors are illustrated below.

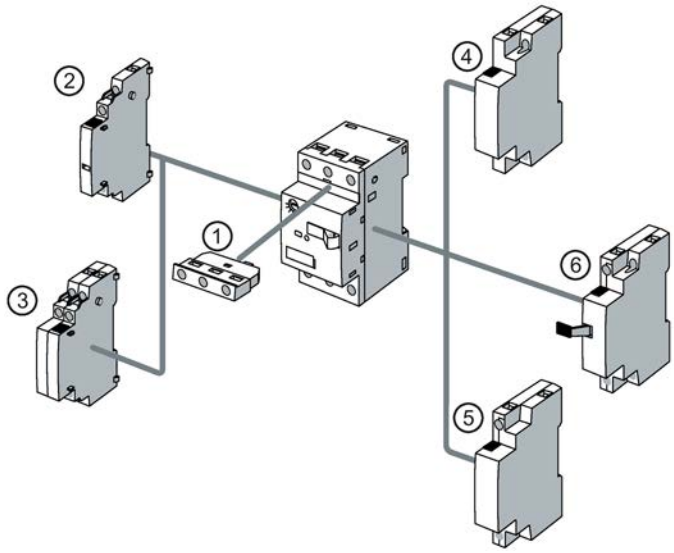

① Transverse auxiliary switch
② Lateral auxiliary switch with 2 contacts
③ Lateral auxiliary switch with 4 contacts
④ Shunt release
⑤ Undervoltage release
⑥ Undervoltage release with leading auxiliary contacts

The mountable accessories for size S00/S0 3RV2 motor starter protectors are illustrated below.

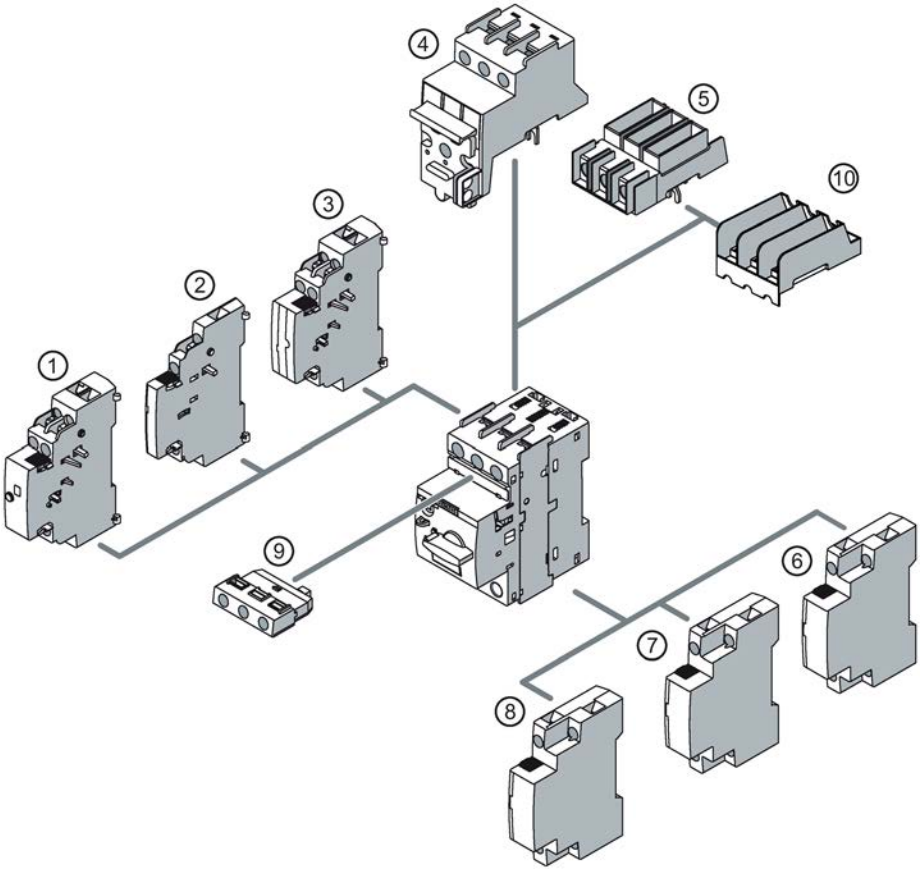

① Signaling switch
② Lateral auxiliary switch with 2 contacts
③ Lateral auxiliary switch with 4 contacts
④ Disconnector module
⑤ Terminal block type E
⑥ Undervoltage release
⑦ Shunt release
⑧ Undervoltage release with leading auxiliary contacts
⑨ Transverse auxiliary switch
⑩ Phase barriers / accessories, type E

Figure 11-1 Motor starter protectors size S00 and S0 with mountable accessories

The mountable accessories for size S2 and S3 3RV2 motor starter protectors are illustrated below.

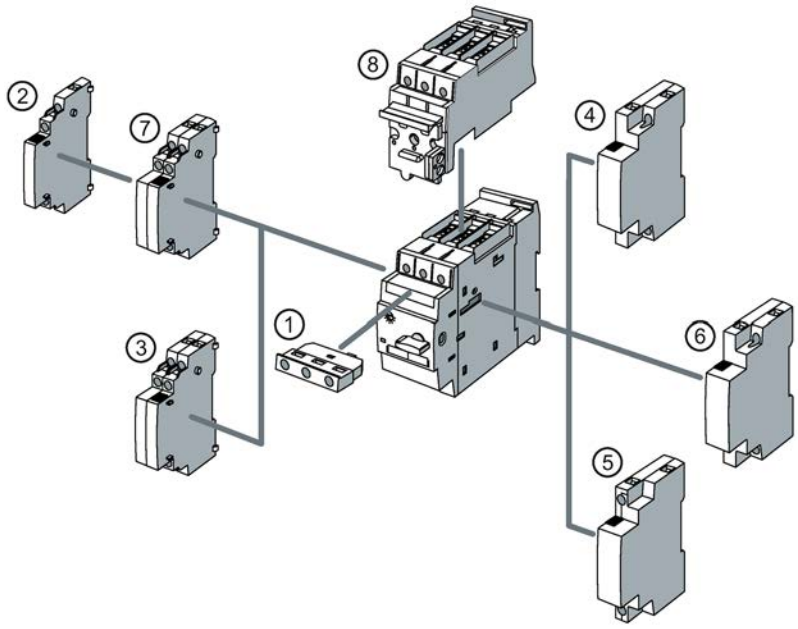

① Transverse auxiliary switch
② Lateral auxiliary switch with 2 contacts
③ Lateral auxiliary switch with 4 contacts
④ Shunt releases
⑤ Undervoltage releases
⑥ Undervoltage release with leading auxiliary contacts
⑦ Signaling switch
⑧ Isolator module (for size S2 only)

Figure 11-2 Motor starter protector size S2 and S3 with mountable accessories

Further accessories

- Phase barriers / accessories, type E
- Door-coupling rotary operating mechanism
- Enclosures and mounting accessories
- Sealable cover
- Insulated 3-phase busbar system
- 8US busbar adapter
- 3RV2917 infeed system (3RV2 only, in sizes S00 and S0)
- Link modules for the installation of contactors, solid-state contactors or soft starters

For maximum flexibility, accessories can be added to the motor starter protector as required – easily, and without the need for tools.

Accessories	3RV1	3RV20	3RV21	3RV23	3RV24	3RV27[3]	3RV28[1]
Auxiliary switch	✓	✓	✓	✓	✓	✓[5]	✓
Signaling switch	-	✓	✓	✓	✓	-	-
Undervoltage release	✓	✓	-	✓	✓	✓	✓
Shunt release	✓	✓	-	✓	✓	✓	✓
Isolator module[4]	-	✓	✓	✓	✓	-	-
Insulated 3-phase busbar system[4]	✓	✓	✓[2]	✓	✓	✓	✓
8US busbar adapters	-	✓	✓	✓	✓	-	-
Door-coupling rotary operating mechanism	-	✓	✓	✓	✓	✓	✓
Link modules	✓	✓	✓	✓	✓	-	-
Surface-mounting enclosure[4]	✓	✓	✓	✓	✓	-	-
Flush-mounting enclosure	✓	✓[1]	✓[1]	✓[1]	✓[1]	-	-
Front plate	-	✓	✓	✓	✓	-	-
Infeed system	✓	✓[1]	-	✓[1]	✓[1]	✓	✓

[1] Only for 3RV2 in sizes S00 and S0.

[2] Only for 3RV2 in size S2.

[3] Only for 3RV2 in sizes S00, S0 and S3.

[4] Not for 3RV2 in size S3.

[5] Only lateral auxiliary switches can be fitted to 3RV27 motor starter protectors in size S3.

11.2 Installation rules/Component rules

Maximum expansion

3RV2 motor starter protectors

The maximum expansion of the 3RV2 motor starter protector is one transverse auxiliary switch, one lateral auxiliary switch with 2 contacts, one signaling switch, and one auxiliary release.

The lateral auxiliary switch 2 NO contacts + 2 NC contacts can also be used as an alternative to a transverse auxiliary switch and a lateral auxiliary switch with 2 contacts. However, in this case it will not be possible to add a signaling switch. Accordingly, a maximum of 4 auxiliary contacts with auxiliary switches may be mounted on each 3RV2 motor starter protector.

3RV1.1 motor starter protector

The maximum expansion of the 3RV1.1 motor starter protector is one transverse auxiliary switch, one lateral auxiliary switch with 2 contacts, and one auxiliary release.

The lateral auxiliary switch with 2 NO contacts + 2 NC contacts can also be used as an alternative to a transverse auxiliary switch and a lateral auxiliary switch with 2 contacts. Accordingly, a maximum of 4 auxiliary contacts with auxiliary switches may be mounted on each 3RV1.1 motor starter protector.

Note

The signaling switch cannot be used for the 3RV1.1. motor starter protectors.

Possible combinations

The following auxiliary/signaling switch and auxiliary switch combinations are possible:

- The lateral auxiliary switch must be mounted to the left of the signaling switch.
- Transverse and lateral auxiliary switches can be combined.
- A maximum of 4 auxiliary contacts may be added.
- One auxiliary release can be mounted on the right of each motor starter protector. An auxiliary release cannot be mounted on the 3RV21 motor starter protector.
- The signaling switch must be selected before the auxiliary switch.
- Once a signaling switch has been selected, only one lateral auxiliary switch with 2 contacts can be selected. It is not possible to select the lateral auxiliary switch with 4 contacts.

11.3 Auxiliary switch

11.3.1 Description

Function

The contacts of the auxiliary switch open and close along with the main contacts on the motor starter protector.

Versions

Table 11- 1 Auxiliary switch versions

Auxiliary switch	Versions	Connection system	Width	Mountable
Transverse auxiliary switch	1 CO contact	Screw-type connection	45 mm	Front side
	1 NO contact + 1 NC contact	Screw-type/spring-loaded connection		
	2 NO contacts	Screw-type/spring-loaded connection		
Solid-state compatible transverse auxiliary switch for operation in dusty atmosphere and in solid-state circuits with low operational currents	1 CO contact	Screw-type connection	45 mm	Front side
Cover caps for transverse auxiliary switch to ensure finger-safety	-	-	45 mm	Front side
Lateral auxiliary switch	1 NO contact + 1 NC contact	Screw-type/spring-loaded connection	9 mm	Left-hand side
	2 NO contacts	Screw-type/spring-loaded connection	9 mm	
	2 NC contacts	Screw-type/spring-loaded connection	9 mm	
	2 NO contacts + 2 NC contacts	Screw-type connection	18 mm	

Note

- A maximum of four auxiliary contacts with auxiliary switches can be mounted on each motor starter protector.
- Auxiliary switches (2 contacts) and signaling switches can be mounted individually or together (does not apply for 3RV1.1).

Terminal labels and notes on the protection of device connections - lateral auxiliary switches and transverse auxiliary switches

21	NC contact (NC 21-22)	The specifications for short-circuit protection (fuses or miniature circuit breakers) are available for the device connections of the main circuit and the auxiliary circuit. You can find technical specifications of the product in the Siemens Industry Online Support (https://support.industry.siemens.com/cs/ww/en/ps/16244/td).
22		
31	NC contact (NC 31-32)	
32		
41	NC contact (NC 41-42)	
42		
13	NO contact (NO 13-14)	
14		
23	NO contact (NO 23-24)	
24		
33	NO contact (NO 33-34)	
34		
43	NO contact (NO 43-44)	
44		

11.3.2 Mounting

Note

The auxiliary switches are mounted in the same way for all sizes.

Mounting auxiliary switches

Mounting a transverse auxiliary switch

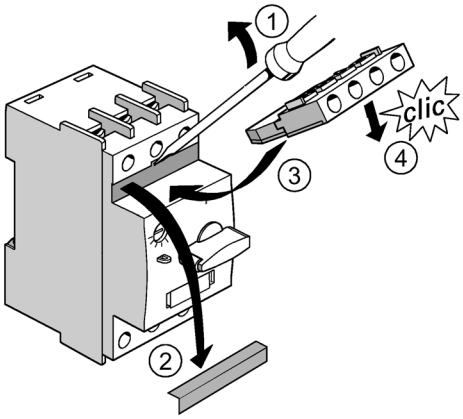

① Using a screwdriver, carefully force off the cover. (Size S00 / S0)

② Take out the cover. (Size S2 / S3[1])

③ Slant the transverse auxiliary switch and push it into the opening on front of the motor starter protector.

④ Press the transverse auxiliary switch down until you hear it engage.

1) Does not apply to 3RV2742.

Mounting a lateral auxiliary switch

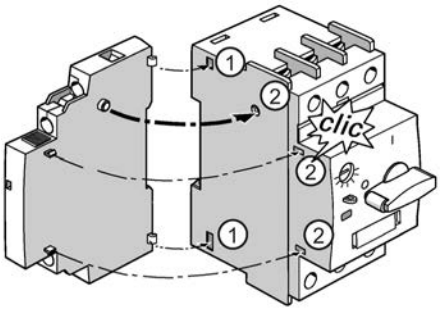

① Attach the lateral auxiliary switch to the rear of the motor starter protector.

② Press the auxiliary switch to the motor starter protector until you hear it engage.

Reference

More information ...	can be found in the Chapter ...
About connection	Circuit diagrams (Page 271)

11.3.3 Disassembly

Note

The auxiliary switches are disassembled in the same way for all sizes.

Disassembling auxiliary switches

Disassembling a transverse auxiliary switch

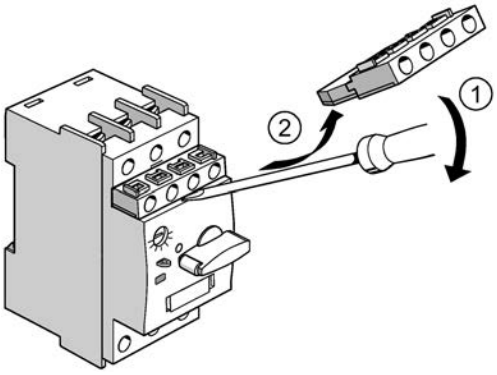

① Slide a screwdriver underneath the transverse auxiliary switch. Using the screwdriver, carefully dislodge the auxiliary switch.

② Pull the transverse auxiliary switch out at an angle and remove it from the motor starter protector.

Disassembling a lateral auxiliary switch

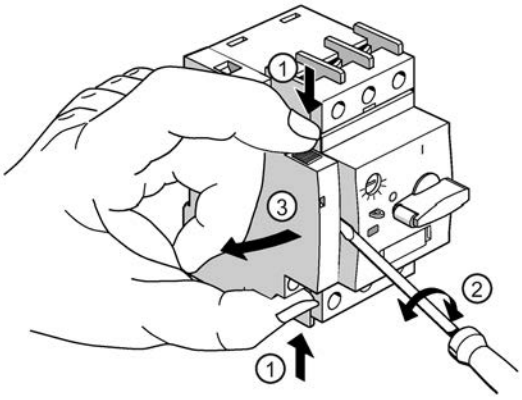

① Press the clips on the top and bottom of the lateral auxiliary switch together.

② Run a screwdriver between the motor starter protector and the lateral auxiliary switch. Dislodge the auxiliary switch from the motor starter protector by carefully turning the screwdriver.

③ Remove the lateral auxiliary switch from the side of the motor starter protector.

11.4 Signaling switch

11.4.1 Description

Function

The signaling switch has two contact systems:

- One contact system (1 NO contact + 1 NC contact) signals general tripping irrespective of whether this was caused by a short-circuit, an overload, or an auxiliary release.
- The other contact system (1 NO contact and 1 NC contact) only switches in the event of short-circuit release.

To be able to reclose the motor starter protector after a short-circuit, once the cause of the error has been dealt with, the signaling switch has to be reset by hand.

Versions

Signaling switch	Versions	Connection system	Width	Mountable
Signaling switch	2 contact systems each with 1 NO contact and 1 NC contact	Screw-type/spring-loaded connection	18 mm	Left-hand side

Note

- A signaling switch can be mounted on the side of the motor starter protector.
- An auxiliary switch (2 contacts) and a signaling switch can be mounted individually or together.
- The signaling switch cannot be used with 3RV1.1, 3RV27 and 3RV28 circuit breakers.

Terminal labels and notes on the protection of device connections - signaling switch

57	Thermal trip	Observe the relevant standards and regulations for the configuration of control panels and the parts and components contained in them, e.g. when dimensioning the cables. Select a current-limiting power supply, for example, to protect these circuits. When selecting the source and the connecting cable, observe the load characteristics of the components connected to the signaling switch, e.g. short-time inrush current peaks, switch-on power, and holding power. The same applies to the selection of suitable protection devices. You can find technical specifications of the product in the Siemens Industry Online Support (https://support.industry.siemens.com/cs/ww/en/ps/16244/td).
58	NO contact (NO 57-58)	
65	Thermal trip	
66	NC contact (NC 65-66)	
77	Short-circuit trip	
78	NO contact (NO 77-78)	
85	Short-circuit trip	
86	NC contact (NC 85-86)	

11.4.2 Mounting

Mounting signaling switches

Mounting a signaling switch (size S00 / S0)

Note

The signaling switch cannot be used for 3RV1 motor starter protectors with size S00 and 3RV27 / 3RV28 circuit breakers.

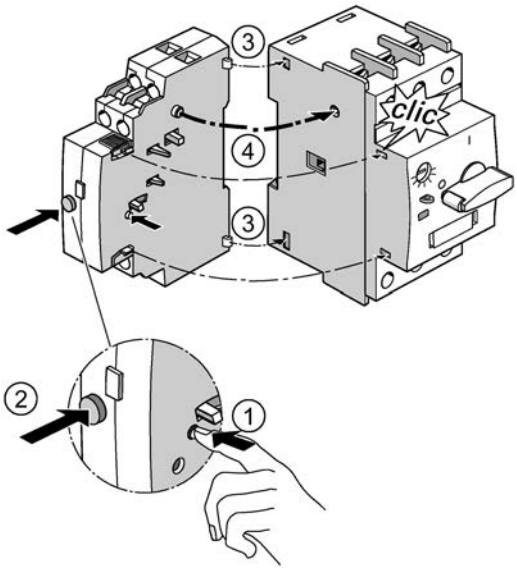

① Press and hold down the transport lock on the inside of the signaling switch.
② Then also press the blue RESET button on the front of the signaling switch until it engages.
③ Attach the signaling switch to the rear of the motor starter protector.
④ Press the signaling switch to the motor starter protector until you hear it engage.

Mounting/disassembling a signaling switch (size S2)

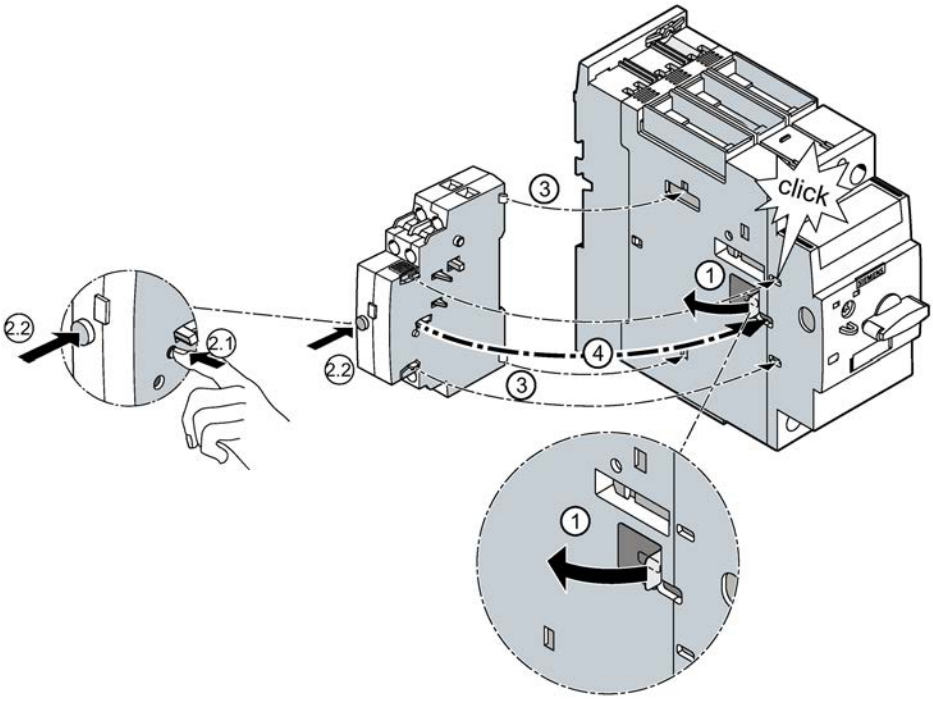

① Remove the adhesive label on the left of the motor starter protector (only for 3RV2.31 up to and including 45 A and 3RV2431 up to and including 40 A).

② Press and hold down the transport lock on the inside of the signaling switch.
Then also press the blue RESET button on the front of the signaling switch until it engages.

③ Attach the signaling switch to the rear of the motor starter protector.

④ Press the signaling switch to the motor starter protector until you hear it engage.

Mounting a signaling switch (size S3)

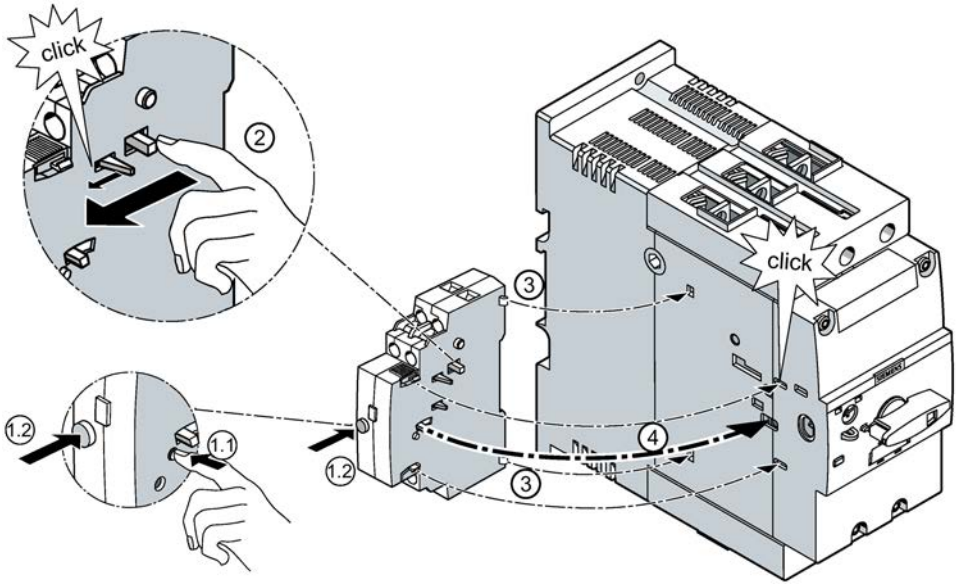

① Press and hold down the transport lock on the inside of the signaling switch.
Then also press the blue RESET button on the front of the signaling switch until it engages.

② Press the hook in the direction of the front side of the signaling switch, as shown in the figure, until you hear the lever change to the tensioned state.

③ Attach the signaling switch to the rear of the motor starter protector.

④ Press the signaling switch to the motor starter protector until you hear it engage.

Reference

More information ...	can be found in the Chapter ...
About connection	Circuit diagrams (Page 271)

11.4.3 Disassembly

Disassembling signaling switches

Disassembling a signaling switch

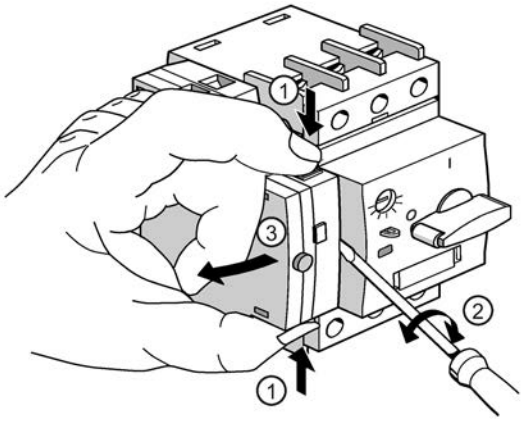

① Press the clips on the top and bottom of the signaling switch together.

② Run a screwdriver between the motor starter protector and the signaling switch. Dislodge the signaling switch from the motor starter protector by carefully turning the screwdriver.

③ Remove the signaling switch from the side of the motor starter protector.

11.4.4 Operation and diagnostics

Overview

The signaling switch supplies two signals:

- Tripped signal (short-circuit, overload, or tripping by shunt release or undervoltage release or by actuation of the TEST slide switch on the motor starter protector)
- A short-circuit signal (short circuit only)

Signaling switch display

Signaling switch with tripped signal

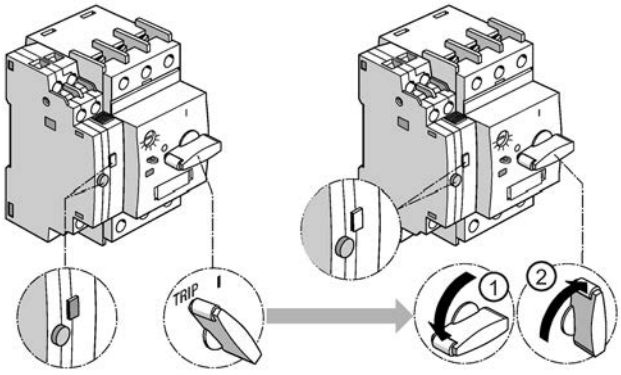

State	Procedure after tripping[1]	
Tripped signal • Motor starter protector – In tripped setting • Signaling switch – Display is red – RESET button (blue) remains pressed down	① / ②	Open (move to O) and then reclose (move to I) the motor starter protector.

[1] Rectify the cause of tripping (overload) before resetting the signaling switch.

Signaling switch with short-circuit signal

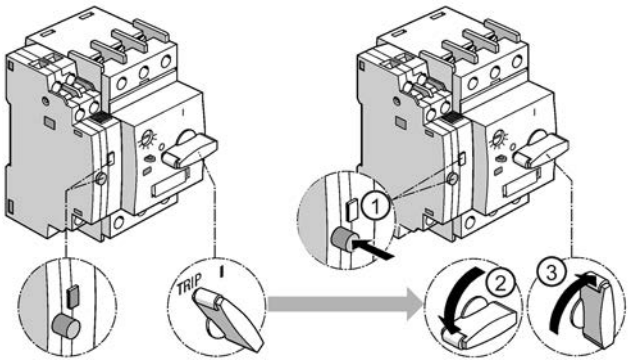

State	Procedure after tripping[1]	
Short-circuit signal • Motor starter protector – In tripped setting • Signaling switch – Display is red – RESET button (blue) is not pressed down	①	Press the blue RESET button on the signaling switch.
	② / ③	Open (move to O) and then reclose (move to I) the motor starter protector.

[1] Rectify the cause of tripping (short-circuit) before resetting the signaling switch.

11.5 Auxiliary release

11.5.1 Description

Auxiliary release

The releases, which are not size-specific, are available in three versions:

- Undervoltage release
- Undervoltage release with leading auxiliary contacts (2 NO contacts)

Note

Special undervoltage releases with leading auxiliary contacts must be used for the 3RV1011 motor starter protectors.

- Shunt release

The releases are mounted on the right-hand side of the motor starter protector and have a width of 18 mm. They are available for all commonly used voltages all over the world. They can be installed inside molded-plastic enclosures.

Note

- One auxiliary release can be mounted on each motor starter protector.
- No accessories can be mounted on the right-hand side of 3RV21 motor starter protectors with overload relay function.
- Special undervoltage releases with leading auxiliary contacts must be used for the 3RV1011 motor starter protectors.

WARNING

Hazardous Voltage. Risk of death or serious injury.

The function of the undervoltage release may be restricted following a short-circuit release.

Following a short-circuit release, check that the undervoltage release is correctly mounted and carry out the function test for 3RV2902-1A..., 3RV2902-1C... again.

Shunt release

For remote-controlled tripping of the motor starter protector

- Via PLC: The release's coil should only be energized for a brief period (maximum 5 s).

Terminal labels and notes on the protection of device connections - shunt release

C1 C2	Coil connection	Observe the relevant standards and regulations for the configuration of control panels and the parts and components contained in them, e.g. when dimensioning the cables. Select a current-limiting power supply, for example, to protect these circuits. When selecting the source and the connecting cable, observe the load characteristics of the shunt release, e.g. short-time inrush current peaks, switch-on power and holding power. The same applies to the selection of suitable protection devices. You can find technical specifications of the product in the Siemens Industry Online Support (https://support.industry.siemens.com/cs/ww/en/ps/16244/td).

Undervoltage release

The undervoltage release trips the motor starter protector in the event of voltage interruption (e.g. if the power supply fails) and prevents the motor from being unintentionally restarted when the voltage is restored. The motor starter protector then has to be reclosed by hand. Particularly suitable for EMERGENCY OFF disconnection via corresponding EMERGENCY OFF pushbutton according to IEC 60204-1 (VDE 0113)

Terminal labels and notes on the protection of device connections - undervoltage release

D1 D2	Coil circuit	Observe the relevant standards and regulations for the configuration of control panels and the parts and components contained in them, e.g. when dimensioning the cables. Select a current-limiting power supply, for example, to protect these circuits. When selecting the source and the connecting cable, observe the load characteristics of the undervoltage release, e.g. short-time inrush current peaks, switch-on power and holding power. The same applies to the selection of suitable protection devices. You can find technical specifications of the product in the Siemens Industry Online Support (https://support.industry.siemens.com/cs/ww/en/ps/16244/td).

Undervoltage release with leading auxiliary contacts

The undervoltage release with leading auxiliary contacts has the same function as the undervoltage release without auxiliary contacts.

Additional functions:

- The auxiliary contacts ensure that the undervoltage release is only energized during the motor starter protector's ON time.
- The auxiliary contacts isolate the undervoltage release from the line on both sides when the voltage is disconnected or in the event of tripping, thereby preventing parasitic voltages into the control circuit when the switch is set to OFF. This requires a conductive connection between outputs D2 and 08.
- Because the contacts are leading contacts, the power supply to the undervoltage release is assured before the remaining steps involved in switching on are carried out.
- Special undervoltage releases with leading auxiliary contacts must be used for the 3RV1011 motor starter protectors.

Terminal labels and notes on the protection of device connections - undervoltage release with leading auxiliary contacts

D1	Coil circuit	Observe the relevant standards and regulations for the configuration of control panels and the parts and components contained in them, e.g. when dimensioning the cables. Select a current-limiting power supply, for example, to protect these circuits. When selecting the source and the connecting cable, observe the load characteristics of the undervoltage release with leading auxiliary contacts, e.g. short-time inrush current peaks, switch-on power and holding power. The same applies to the selection of suitable protection devices. You can find technical specifications of the product in the Siemens Industry Online Support (https://support.industry.siemens.com/cs/ww/en/ps/16244/td).
D2		
07	Coil contact (auxiliary switch)	
08		

11.5.2 Auxiliary release voltage ranges

Table 11- 2 Undervoltage release voltage ranges

Auxiliary release	Frequency		
	DC	**50 Hz AC**	**60 Hz AC**
Undervoltage release	24 V *)	24 V	-
		110 V	120 V
		-	208 V
		230 V	240 V
		400 V	440 V
		415 V	480 V
		500 V	600 V
Undervoltage release with leading auxiliary contacts	-	230 V	240 V
		400 V	440 V
		415 V	480 V

*) A break of at least 2.5 s must be observed between the trip and switching the undervoltage release back on again.

Table 11- 3 Shunt release voltage ranges

Auxiliary release	Frequency	
	50/60 Hz AC 100% ED 1)	**50/60 Hz AC; DC 5 s ED 2)**
Shunt release	20 to 24 V	20 to 70 V
	90 to 110 V	70 to 190 V
	210 to 240 V	190 to 330 V
	350 to 415 V	330 to 500 V
	500 V	500 V

1) The voltage range is valid for 100% (infinite) ON period. The response voltage lies at 0.9 of the lower limit of the voltage range.

2) The voltage range is valid for 5 s ON period at 50 Hz/60 Hz AC and DC. The response voltage lies at 0.85 of the lower limit of the voltage range.

11.5.3 Mounting

Mounting a shunt release / undervoltage release

Mounting a shunt release / undervoltage release

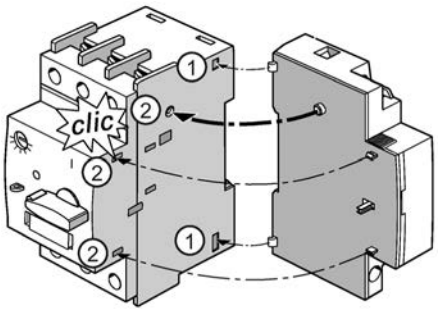

① Attach the shunt release / undervoltage release to the rear of the motor starter protector.

② Press the shunt release / undervoltage release to the motor starter protector until you hear it engage.

11.5.4 Disassembly

Disassembling the shunt release / undervoltage release

Disassembling a shunt release / undervoltage release

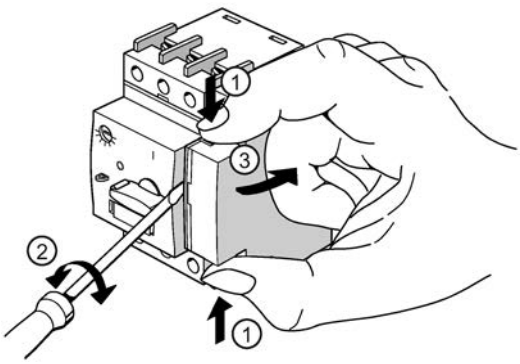

① Press the clips on the top and bottom of the shunt release / undervoltage release together.

② Run a screwdriver between the shunt release / undervoltage release and the motor starter protector. Dislodge the shunt release / undervoltage release from the motor starter protector by carefully turning the screwdriver.

③ Remove the shunt release / undervoltage release from the side of the motor starter protector.

11.6 Disconnector module

11.6.1 Description

Disconnector module

The disconnector module is mounted on the motor starter protector on the infeed side. The disconnector module can be used to form a visible isolating distance. To set up the isolating distance, the plug connector is removed from the enclosure. The isolating plug can only be removed with the supply disconnected.

The isolating point is clearly visible and is secured with a bracket lock so that the plug connector cannot be inserted during maintenance work, for example.

Disconnector modules are available for motor starter protectors in sizes S00, S0 and S2.

Note

- The disconnector module cannot be used with 3RV1.11, 3RV27 and 3RV28 circuit breakers.
- The disconnector module cannot be used with the transverse auxiliary switches. We recommend using lateral auxiliary switches when using the disconnector module.
- The disconnector module must not be used in conjunction with the 3-phase busbars 3RV1915 and 3RV1935.
- The disconnector module in size S2 can only be used together with motor starter protectors with rated currents up to 65 A.

UL / CSA derating table

A specific derating must be observed when fitting a disconnector module onto a motor starter protector (sizes S0 and S2). The following table presents the maximum permitted conventional thermal current for sizes S0 and S2.

3RV2.2 (size S0)	Surrounding Air Temperature 40 °C	Ambient Temperature 40 °C
40 A	37.5 A	--
36 A	33.7 A	--
32 A	32 A	30.3 A
28 A	28 A	27 A
≤ 25 A	25 A	25 A

3RV2.3 (size S2)	Surrounding Air Temperature 40 °C	Ambient Temperature 40 °C
80 A	--	--
73 A	--	--
65 A	65 A	--
59 A	59 A	--
≤ 52 A	52 A	52 A

11.6.2 Mounting

Mounting the disconnector module

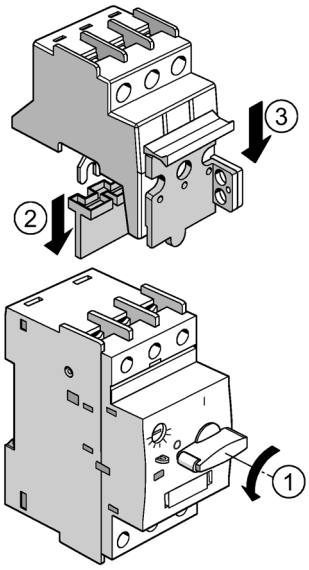

① Set the rotary knob on the motor starter protector to O.

② Remove the protective cover from the terminal lugs on the disconnector module.

③ Set the disconnector module down on the motor starter protector. Make sure that the terminal lugs on the disconnector module slot into the corresponding openings.

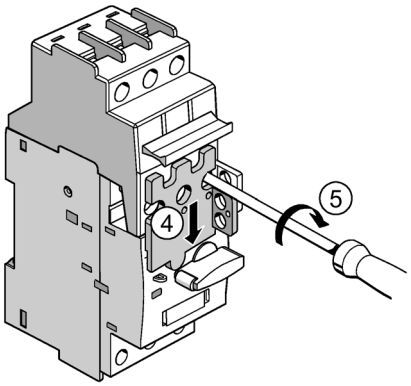

④ Slide the closing lockout down.

⑤ Screw the main conductor terminals tight on the motor starter protector.

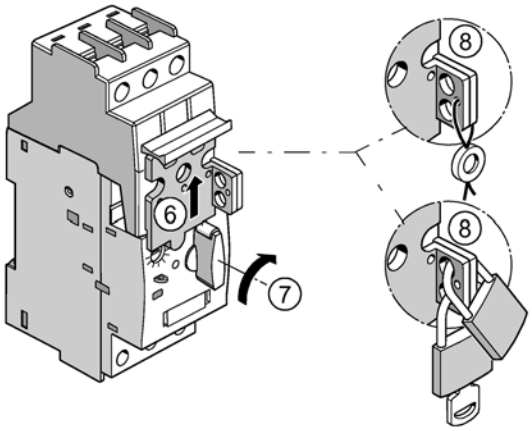

⑥ Slide the closing lockout up.

⑦ Set the rotary button on the motor starter protector to I.

⑧ Secure the disconnector module so that the isolating plug cannot be removed when the motor starter protector is active.

11.6.3 Isolation and shut-off

Creating and securing the isolating distance

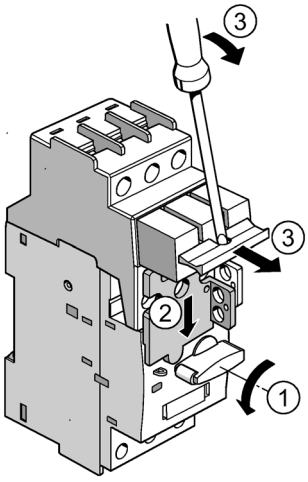

① Set the rotary knob on the motor starter protector to O.
② Slide the closing lockout down.
③ Slide the isolating plug forward and out of the disconnector module.

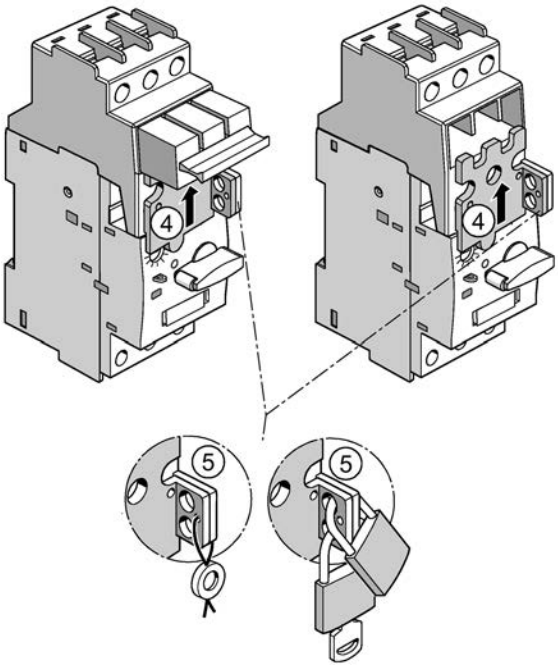

④ Slide the closing lockout up.
⑤ Secure the closing lockout so that the isolating plug cannot be inserted or pushed further in.

11.7 Phase barriers / terminal block UL 60947-4-1 (UL 508) "Type E"

11.7.1 Description

"Self-Protected Combination Motor Controller (Type E)" according to UL 60947-4-1 (UL 508)

The 3RV20 / 3RV24 motor starter protectors are approved as "Self-Protected Combination Motor Controller" (Type E) according to UL 60947-4-1 (UL 508).

This requires increased clearance and creepage distances (1 inch and 2 inches respectively) at the input side of the device, which are achieved by mounting terminal blocks:

1. The 3RV2928-1H terminal block is screwed onto the basic unit (sizes S00 and S0 only).
2. The 3RV2928-1K (for 3RV2 in sizes S00 and S0) and 3RV2938-1K (for 3RV2 in size S2) phase barriers are plugged onto the device.[1)]

   [1)] The following motor starter protectors fulfill the extended clearances and creepage distances for approval according to Type E without using a phase barrier:

   – 3RV2.31-4S.1.
   – 3RV2.31-4T.1.
   – 3RV2.31-4B.1.
   – 3RV2.31-4D.1.
   – 3RV2.31-4E.1.
   – 3RV2.31-4P.1.
   – 3RV2.31-4U.1.
   – 3RV2.31-4V.1.

3. With size S3, the supplied terminal block is replaced with the 3RT2946-4GA07 terminal block (accessory). No transverse auxiliary switches can be fitted when using this terminal block. As an option, the terminal cover 3RV2948-1LA00 can be mounted on the terminal block 3RT2946-4GA07.

The 3RV2928-1H terminal block for size S00/S0 is recommended for the connection of larger conductor cross-sections.

Note

CSA

CSA approval does not require extended clearances and creepage distances.

Function

To ensure optimum protection against flashover between the connected conductors in the event of a short circuit, phase barriers / terminal blocks can be used. The phase barriers / terminal blocks are required to increase the clearances and creepage distances in conjunction with prevailing switching overvoltages when switching the motor starter protectors. The phase barriers / terminal blocks increase the insulation strength between the connection contacts of the motor starter protectors.

Restriction

The terminal block and phase barriers cannot be used simultaneously with 3RV19.5 3-phase busbars.

It is not possible to install the 3RV2 motor starter protector (size S00 / S0) with a phase barrier onto a mounting plate.

Observe the following procedure when fitting the 3RV2 motor starter protector (size S2) with a phase barrier onto a mounting plate.

1. Use a screwdriver to diagonally tighten the screws in the drilled holes on the motor starter protector.
2. Attach the phase barrier to the motor starter protector from the front. Slide the phase barrier back until it snaps onto the motor starter protector.

Versions

The terminal block and the phase barriers are available in screw designs. They can only be mounted on the motor starter protector using screw-type connection systems.

11.7.2 Mounting terminal block UL 60947-4-1 (UL 508) "Type E"

The 3RV2928-1H terminal block can only be mounted on 3RV2 motor starter protectors in sizes S00 and S0 using the screw-type connection system.

Mounting the terminal block UL 60947-4-1 (UL 508) "Type E" (size S00 and S0)

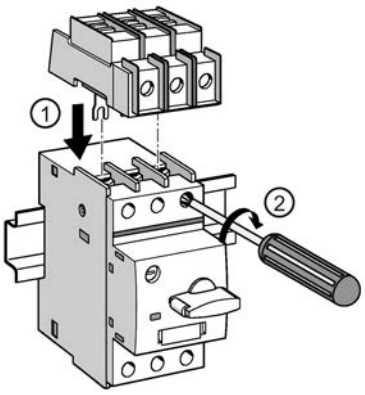

① Place the terminal block on the motor starter protector from above.

② Screw the terminal block tight by screwing the main conductor terminals of the motor starter protector tight.

Mounting the terminal block UL 60947-4-1 (UL 508) "Type E" (size S3)

The 3RT2946-4GA07 terminal block can only be mounted on 3RV2 motor starter protectors in size S3.

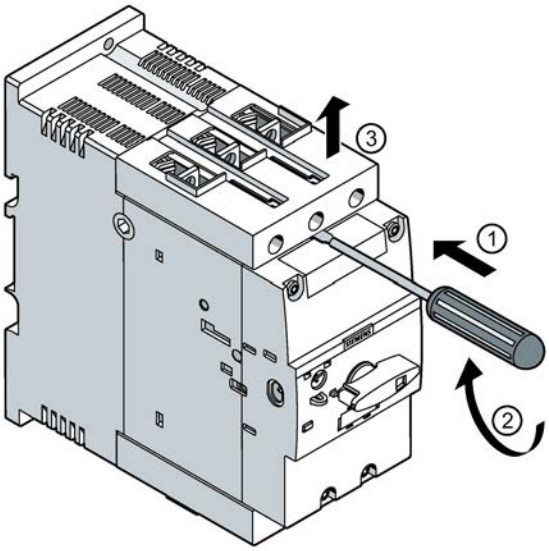

① Position the screwdriver on the terminal support, as shown in the figure, in the middle between the motor starter protector and the removable box terminal block.

② Carefully lever the detachable box terminal block from the motor starter protector.

③ Detach the removable box terminal block from the motor starter protector in the upward direction.

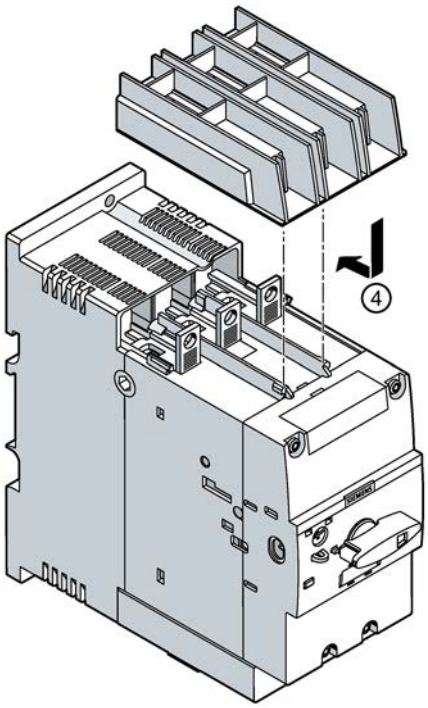

④ Slide the terminal block into the guide tabs provided on the motor starter protector.

Note

No transverse auxiliary switches can be fitted when using 2946-4GA07 3RT terminal blocks.

11.7.3 Mounting phase barriers

The phase barriers are available for 3RV2 motor starter protectors in sizes S00, S0, S2 and S3. The illustration below shows how to assemble the 3RV29.8-1K phase barriers on the motor starter protector.

Mounting the phase barriers (size S00 / S0)

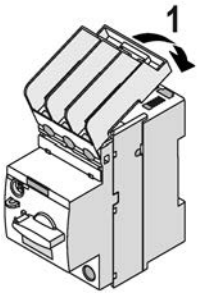

① Attach the phase barriers to the motor starter protector from the front. Tilt the phase barriers back and down until they snap onto the motor starter protector.

Mounting the phase barriers (size S2)

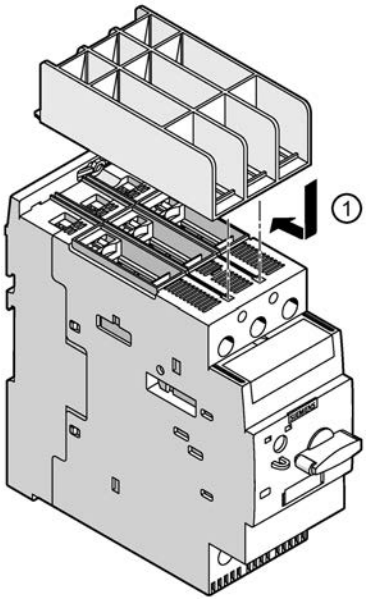

① Slide the phase barriers into the guide rails provided on the motor starter protector.

Mounting the phase barriers (size S3)

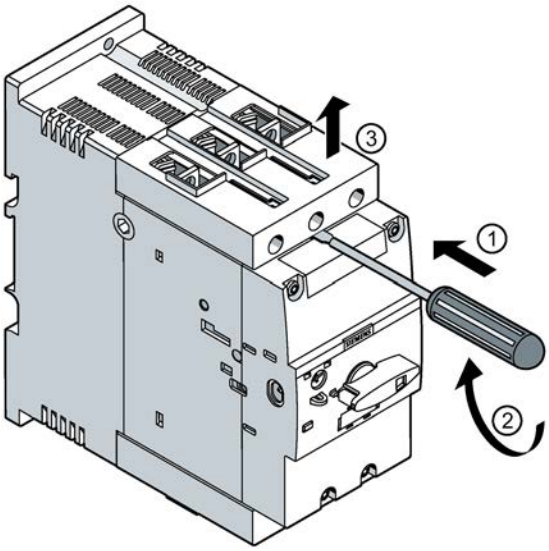

① Position the screwdriver on the terminal support, as shown in the figure, in the middle between the motor starter protector and the removable box terminal block.

② Carefully lever the detachable box terminal block from the motor starter protector.

③ Detach the removable box terminal block from the motor starter protector in the upward direction.

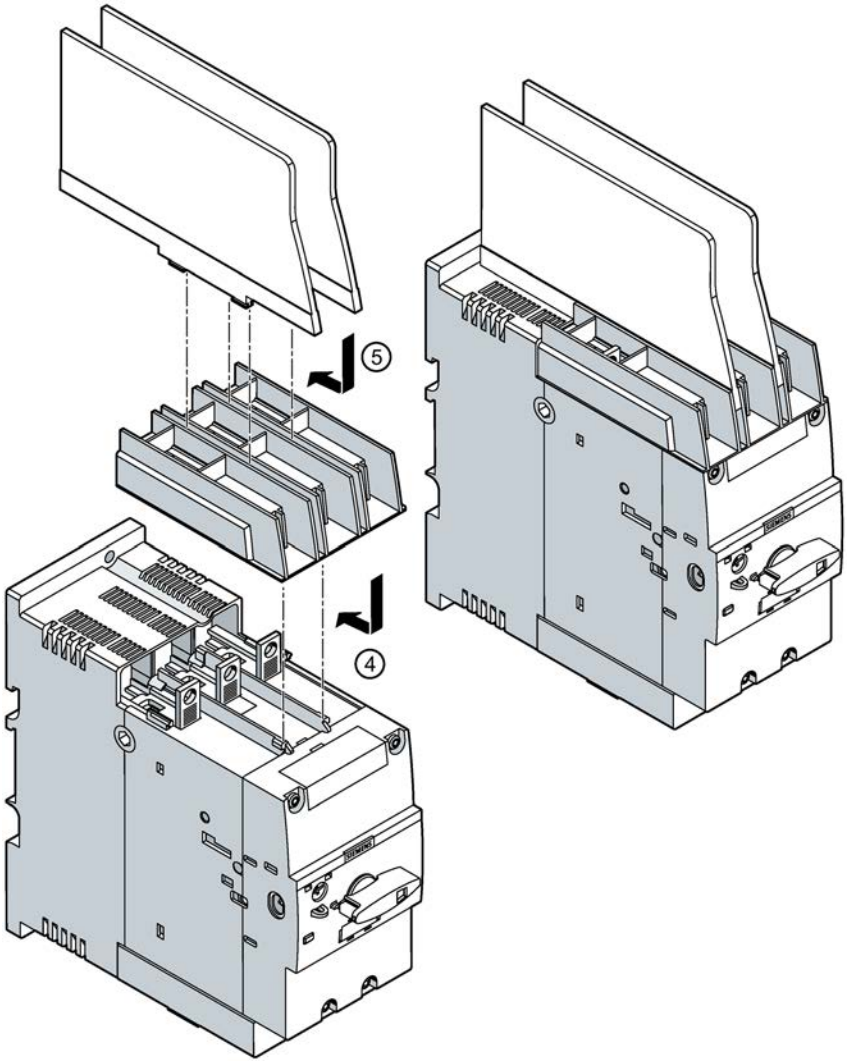

④ Slide the terminal block into the guide tabs provided on the motor starter protector.

⑤ Slide the phase barriers into the openings provided on the terminal block.

Note

No transverse auxiliary switches can be fitted when using the 3RV2948-1K terminal blocks for 3RV2 motor starter protectors in size S3.

11.8 Door-coupling rotary operating mechanism (not for 3RV1011 and 3RV1611)

11.8.1 Description

The 3RV2 motor starter protectors can be installed in the control cabinet and operated externally by means of a door-coupling rotary operating mechanism. The mechanism engages when the control cabinet door closes. If the motor starter protector is active, the coupling locks, thereby preventing the door opening unintentionally. This lock can be deactivated by maintenance personnel. In the OPEN position, the rotary operating mechanism can be secured against reclosing with bracket locks. The bracket locks prevent the door from opening unintentionally. The door-coupling rotary operating mechanisms are certified to UL / CSA and tested for Enclosure Type 1, 3R, 12.

Door-coupling rotary operating mechanisms for standard conditions

The door-coupling rotary operating mechanisms comprise a knob, a coupling driver, and an extension shaft 130/330 mm in length (6 x 6 mm). The door-coupling rotary operating mechanisms are dimensioned for IP64 degree of protection. The interlocking of the door prevents the unintentional opening of the control cabinet door when the switch is set to ON. Accessories mounted on the side can be used.

Door-coupling rotary operating mechanisms for harsh conditions

The door-coupling rotary operating mechanisms comprise a knob, a coupling driver, and an extension shaft 300 mm in length (8 x 8 mm), a spacer and two metal brackets, which are used to mount the motor starter protector.

The door-coupling rotary operating mechanisms are designed to degree of protection IP65. The interlocking of the door reliably prevents the unintentional opening of the control cabinet door when the switch is set to ON.

Laterally mountable auxiliary releases and 2-pole auxiliary switches can be used. The door-coupling rotary operating mechanisms meet the requirements for isolating function according to IEC 60947-2.

Versions

Door-coupling rotary operating mechanism	Versions	Width	Mountable
Door-coupling rotary operating mechanisms for standard conditions (degree of protection IP64)			
Door-coupling rotary operating mechanism	Gray	Depending on version	Depending on version
EMERGENCY OFF door-coupling rotary operating mechanism	Red/yellow	Depending on version	Depending on version
Door-coupling rotary operating mechanism for harsh conditions (IP65 degree of protection)			
Door-coupling rotary operating mechanism	Gray	Depending on version	Depending on version
EMERGENCY OFF door-coupling rotary operating mechanism	Red/yellow	Depending on version	Depending on version

11.8.2 Mounting

Disassembling the knob attachment on 3RV2.4 motor starter protectors (size S3)

Before mounting a door-coupling rotary operating mechanism, the knob attachment of the 3RV2.4 motor starter protector must be disassembled.

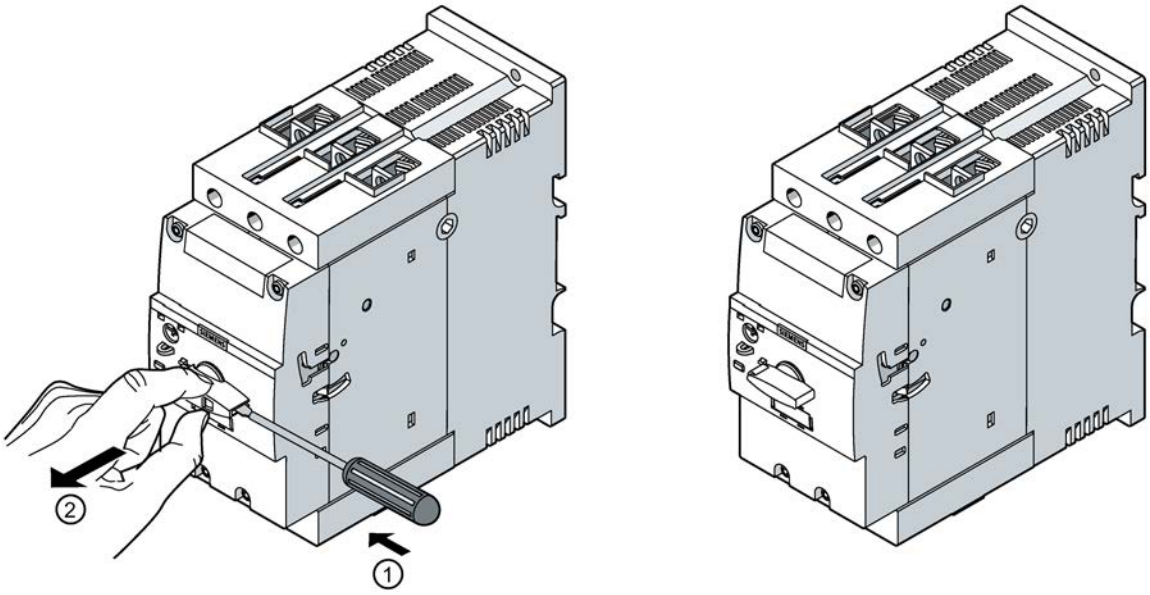

① Slide a screwdriver from the side into the opening on the knob attachment, as shown in the figure.

② Remove the knob attachment from the motor starter protector to the front.

11.8.2.1 Mounting the door-coupling rotary operating mechanism for standard conditions

Mounting of the 3RV2926-0. door-coupling rotary operating mechanism for standard conditions

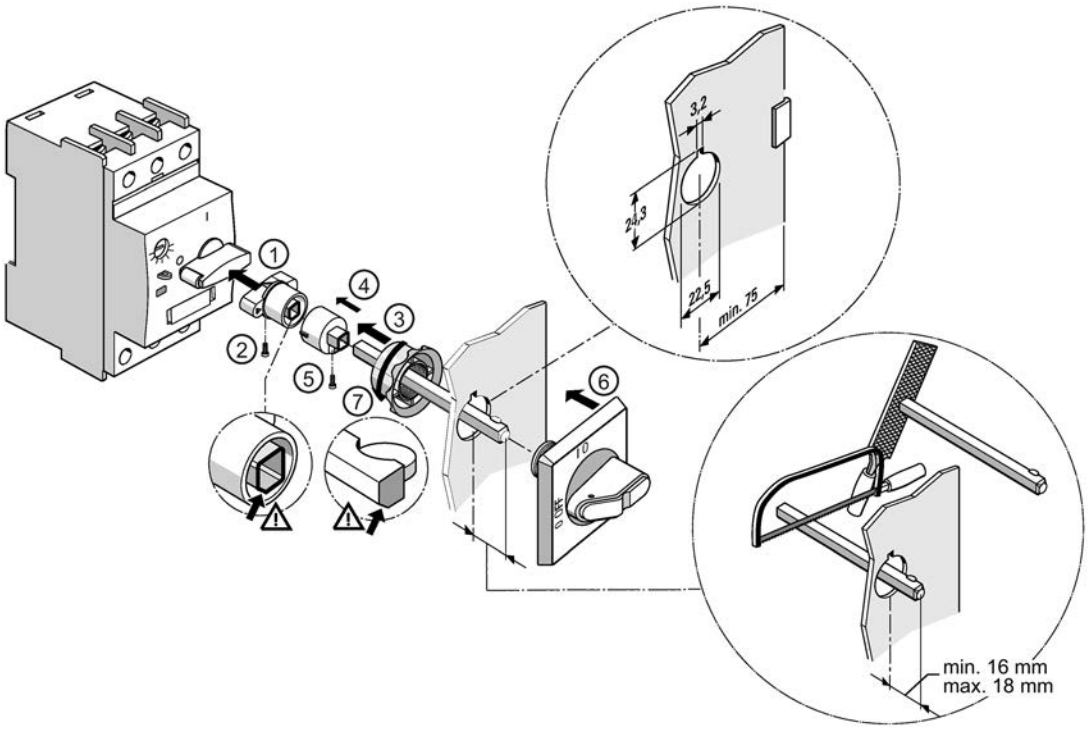

Figure 11-3 Mounting the door-coupling rotary operating mechanism

Note

Remember to observe the mechanical coding of the connecting rod!

Mounting of the 3RV2926-1. door-coupling rotary operating mechanisms for standard conditions

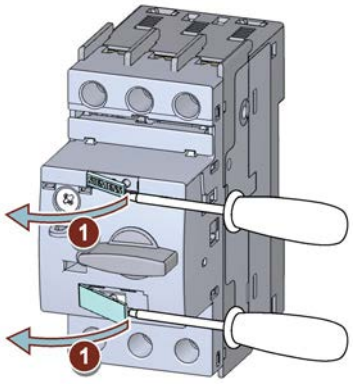

① Push a screwdriver at the side into the opening of the labeling plate and the SIEMENS label and remove the labeling plate and the SIEMENS label.

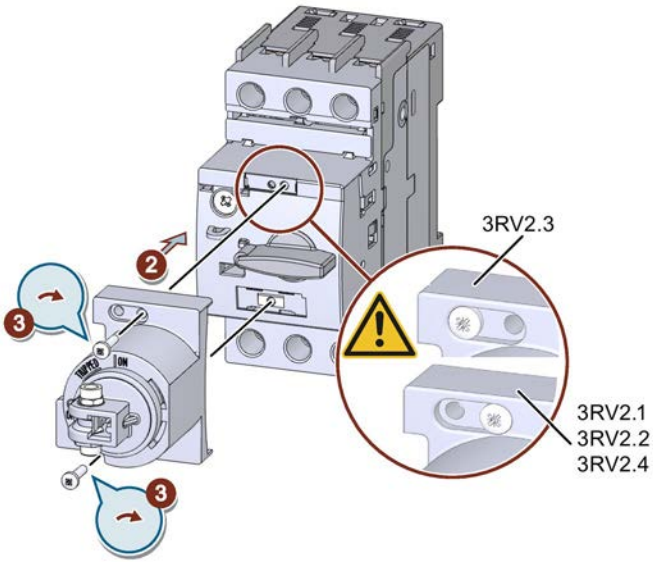

② Mount the door-coupling rotary operating mechanism on the motor starter protector as shown
③ in the figure. Make sure that you screw the door-coupling rotary operating mechanism in the right position on the motor starter protector.

Tightening torque: 0.4 Nm

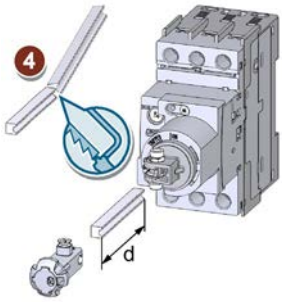

④ Shorten the shaft to the required length.

Note

The minimum and maximum extension options can be found in Chapter "Dimension drawings for 3RV2926-1 door-coupling rotary operating mechanisms (Page 301)".

⑤ Slide the coupling driver onto the extension shaft and tighten the screw on the coupling driver using a screwdriver.

Screwdriver: PZ 2
Tightening torque: 1.5 Nm

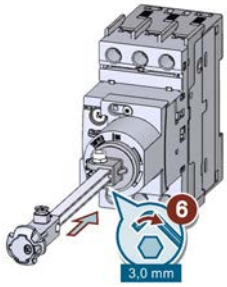

⑥ Slide the shaft with the mounted coupling driver into the holder of the door-coupling rotary operating mechanism. Tighten the screw on the shaft using an Allen key.

Allen key: 3.0 mm
Tightening torque: 0.8 ... 1.0 Nm

The lateral offset must not exceed + / - 1 mm. In the shaft direction, the offset must not exceed + / - 1.5 mm.

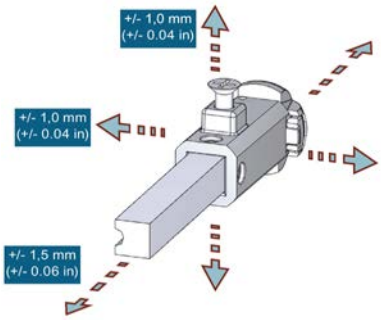

Mounting the handle

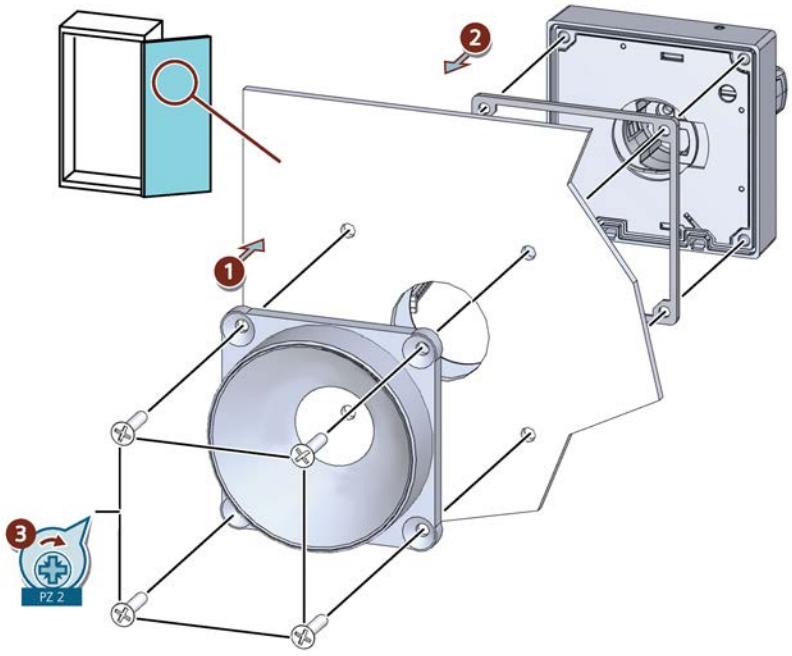

① Screw the handle with the masking plate and seal to the inside of the control cabinet door
② using a PZ 2 screwdriver.
③ Tightening torque: 1.0 Nm

Mounting of the 3RV2926-1. door-coupling rotary operating mechanisms for standard conditions with tolerance compensation

With the 3RV2926-0Q tolerance compensation, an offset can be compensated when installing the door-coupling rotary operating mechanism for standard conditions. For this purpose, the standard coupling head on the shaft is removed and replaced by the tolerance compensation.

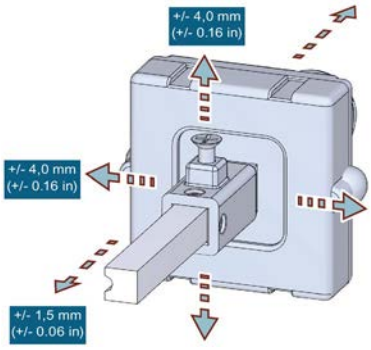

The lateral offset must not exceed + / - 4 mm. In the shaft direction, the offset must not exceed + / - 1.5 mm.

Note

When using the 3RV2926-0Q tolerance compensation for the following circuit-breakers (size S2), the switching status can jump directly to the "OFF" position when triggered:

- 3RV2.3.-4S.
- 3RV2.3.-4T.
- 3RV2.3.-4B.
- 3RV2.3.-4D.
- 3RV2.3.-4E.

Procedure

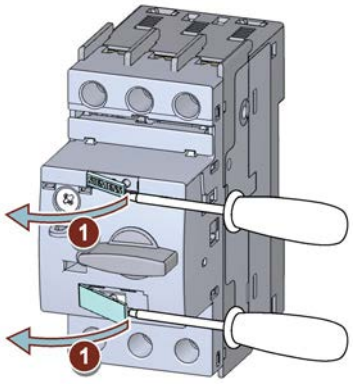

① Push a screwdriver at the side into the opening of the labeling plate and the SIEMENS label and remove the labeling plate and the SIEMENS label.

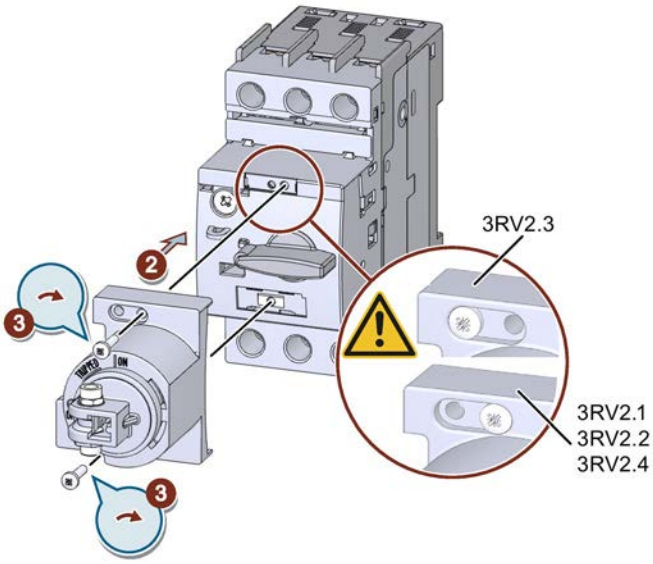

② Mount the door-coupling rotary operating mechanism on the motor starter protector as shown
③ in the figure. Make sure that you screw the door-coupling rotary operating mechanism in the right position on the motor starter protector.

Tightening torque: 0.4 Nm

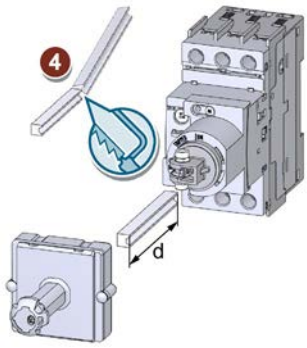

④ Shorten the shaft to the required length.

Note

The minimum and maximum extension options can be found in Chapter "Dimension drawings for 3RV2926-1 door-coupling rotary operating mechanisms (Page 301)".

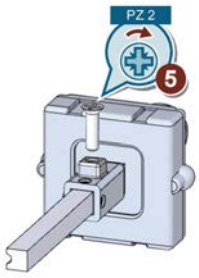

⑤ Slide the tolerance compensation onto the extension shaft and tighten the screw on the tolerance compensation using a screwdriver.

Screwdriver: PZ 2
Tightening torque: 1.5 Nm

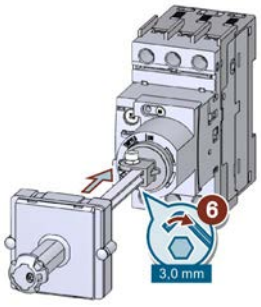

⑥ Slide the shaft with the mounted tolerance compensation into the holder of the door-coupling rotary operating mechanism. Tighten the screw on the shaft using an Allen key.

Allen key: 3.0 mm
Tightening torque: 0.8 ... 1.0 Nm

Mounting position

It is optionally possible to adjust the mounting position.

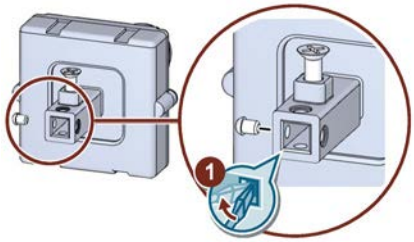

① Use a screwdriver to lever the clip out of the holder on the tolerance compensation.

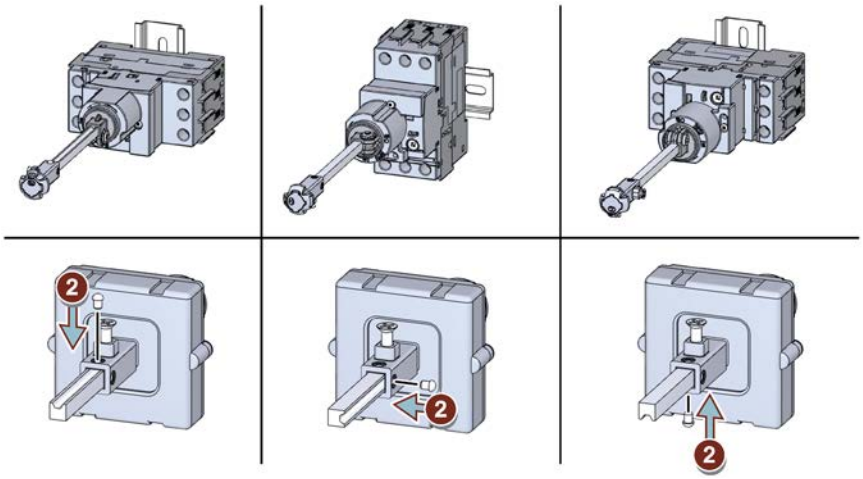

② Slide the shaft into the tolerance compensation holder and reinsert the clip into the opening.

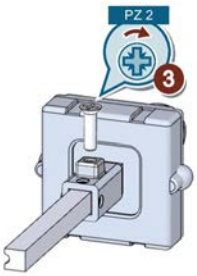

③ Tighten the screw on the tolerance compensation using a PZ 2 screwdriver.
Tightening torque: 1.5 Nm

11.8.2.2 Mounting the door-coupling rotary operating mechanism for harsh conditions

Mounting the door-coupling rotary operating mechanisms for harsh conditions

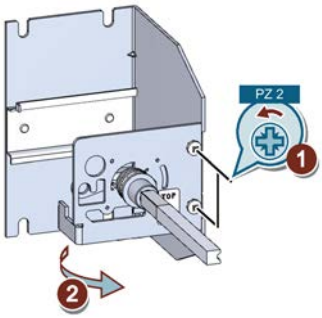

① Loosen the screws of the cover of the door-coupling rotary operating mechanism.
② Remove the cover.

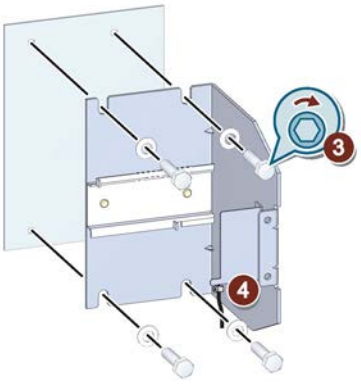

③ Screw the base of the door-coupling rotary operating mechanism tight to a level surface using 4 x M5 screws.
Make sure that the screw connection can withstand an extraction force of > 800 N.
④ Connect to ground.

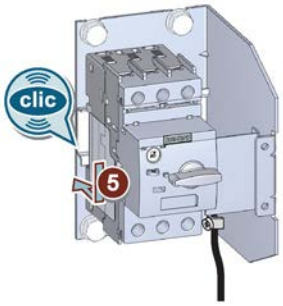

⑤ Attach the deactivated motor starter protector (size S00 and S0) to the mounting rail from above and snap the motor starter protector onto the DIN rail.

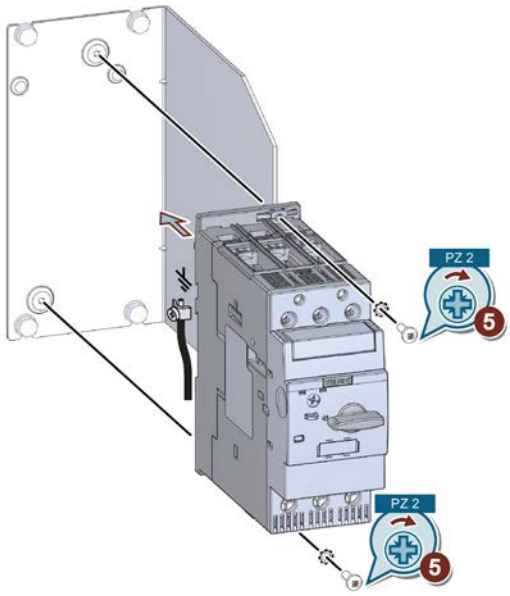

⑤ Screw the switched off motor starter protector (size S2 and S3) to the base of the door-coupling rotary operating mechanism with 2 x M4 screws.

Tightening torque: 1.2 ... 1.4 Nm

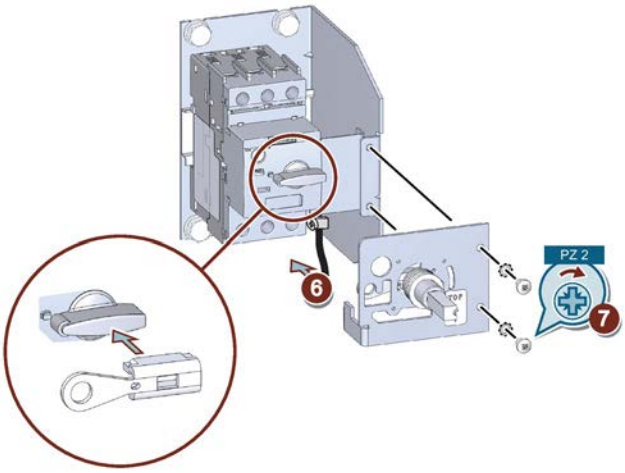

⑥ ⑦ Mount the cover on the base of the door-coupling rotary operating mechanism. When doing this, make sure that the motor starter protector is set to "OFF" and that the shaft slot is on the right.

Screwdriver: PZ 2
Tightening torque: 1.5 ... 2.0 Nm

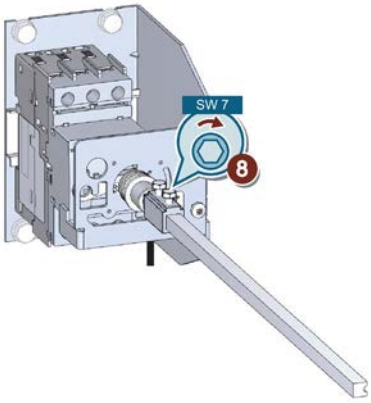

⑧ Slide the spacer onto the shaft. Slide the extension shaft into the spacer. Screw the spacer tight.
Tightening torque: 2.6 ... 3.0 Nm

3RV.9.6-2. door-coupling rotary operating mechanisms for harsh conditions

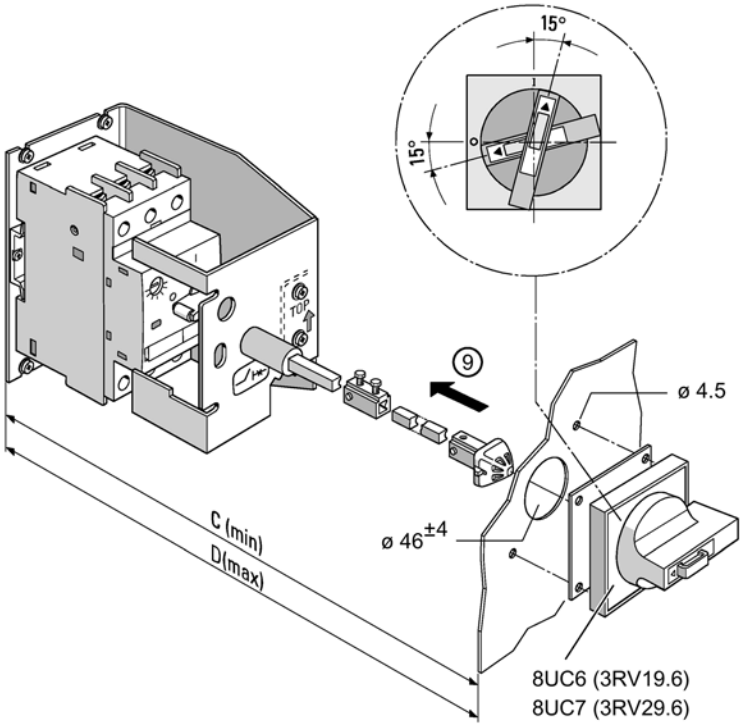

⑨ Slide the spacer onto the shaft. Slide the extension shaft into the spacer. Slide the coupling driver onto the extension shaft.
Secure the spacer and coupling driver at the desired length.
Screw the handle with masking frame and seal onto the doors from behind.

The following table shows the minimum and maximum extension options.

	mm	
	C (min)	**D (max)**
3RV1926-2B / 3RV1926-2C / 3RV2926-2B / 3RV2926-2C	163	463
3RV1936-2B / 3RV1936-2C / 3RV2936-2B / 3RV2936-2C	215	515
3RV1946-2B / 3RV1946-2C / 3RV2946-2B / 3RV2946-2C	240	540

3RV29.6-3. door-coupling rotary operating mechanisms for harsh conditions

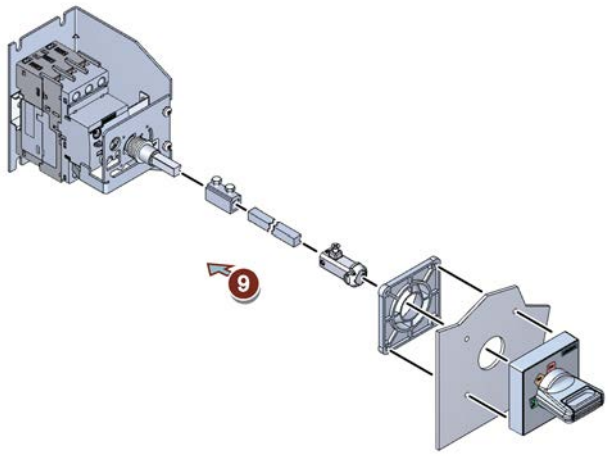

⑨ Slide the coupling driver onto the extension shaft.
Secure the spacer and coupling driver at the desired length.
Tighten the screw on the coupling driver using a screwdriver.

Screwdriver: PZ 2
Tightening torque: 1.5 Nm

Screw the handle with the masking frame and seal to the inside of the control cabinet door using a PZ 2 screwdriver.

Tightening torque: 1.0 Nm

The lateral offset must not exceed + / - 1 mm. In the shaft direction, the offset must not exceed + / - 1.5 mm.

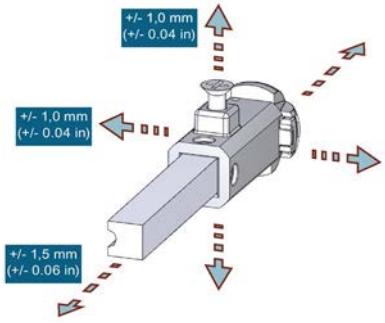

Note

The minimum and maximum extension options can be found in Chapter "Dimension drawings for 3RV29.6-3 door-coupling rotary operating mechanisms for harsh conditions. (Page 306)".

Mounting the handle

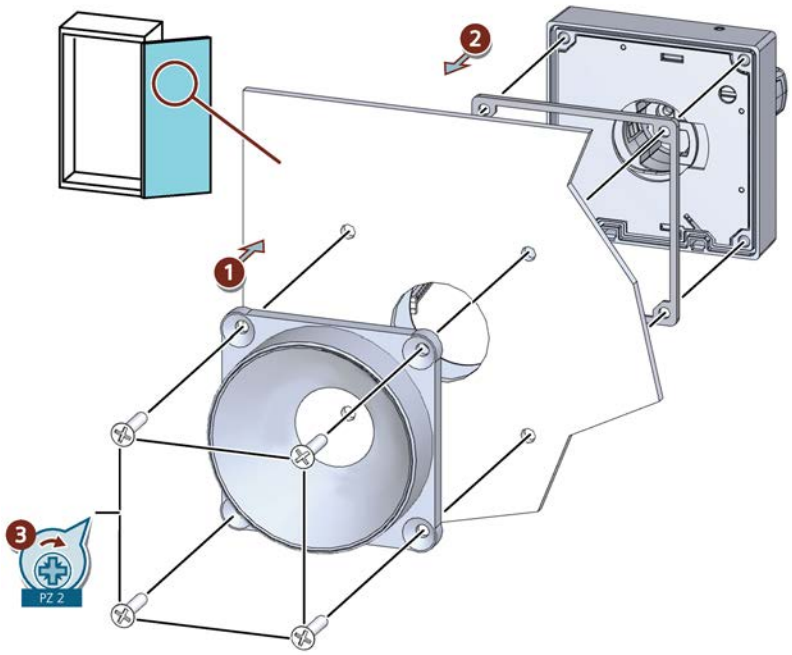

① Screw the handle with the masking frame and seal to the inside of the control cabinet door
② using a PZ 2 screwdriver.
③ Tightening torque: 1.0 Nm

Mounting of the 3RV29.6-3. door-coupling rotary operating mechanisms for harsh conditions with tolerance compensation

With the 3RV2926-2Q tolerance compensation, an offset can be compensated when installing the door-coupling rotary operating mechanism for harsh conditions. For this purpose, the standard coupling head on the shaft is removed and replaced by the tolerance compensation.

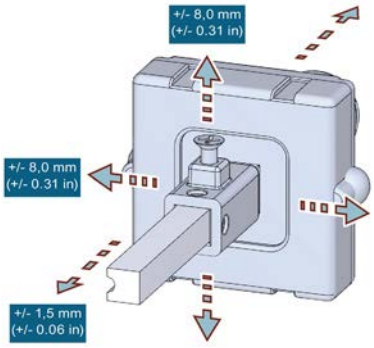

The lateral offset must not exceed + / - 8 mm. In the shaft direction, the offset must not exceed + / - 1.5 mm.

Mounting position

It is optionally possible to adjust the mounting position.

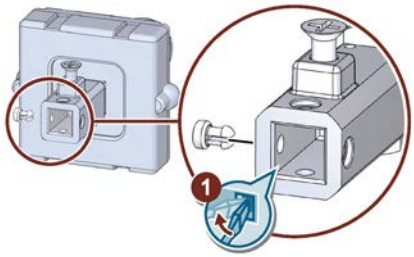

① Use a screwdriver to lever the clip out of the holder on the tolerance compensation.

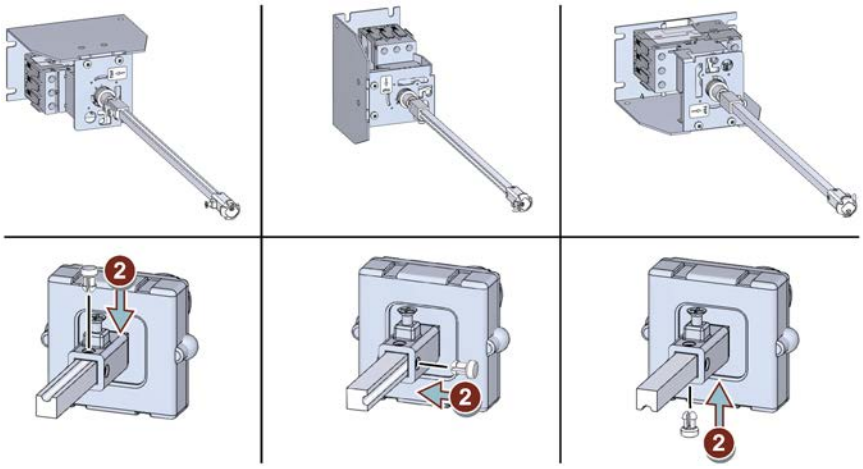

② Slide the shaft into the tolerance compensation holder and reinsert the clip into the opening.

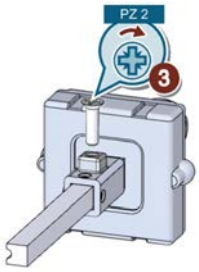

③ Tighten the screw on the tolerance compensation using a PZ 2 screwdriver.
Tightening torque: 1.5 Nm

Mounting of the 3RV2946-3. door-coupling rotary operating mechanism for harsh conditions for a main switch size S3 according to UL 508A and NFPA 79

For the installation of a door-coupling rotary operating mechanism for harsh conditions for a main switch (size S3) in a UL control cabinet (according to UL 508A and NFPA 79), the standard requires a second handle in the control cabinet. This supplementary handle may only be switched on with the control cabinet door open by means of a deliberate action.

The following figures show the setup required for this purpose, using a 3RV2946-3. door-coupling rotary operating mechanism for harsh conditions, the 3RV2926-0P shaft support and the 3VA9137-0GC01 supplementary handle (gray) or the 3VA9137-0GC05 supplementary handle (red/yellow). When switching on the supplementary handle, the handle must be pressed against a spring in the direction of the mounting plane. This is the required deliberate action so that the supplementary handle does not turn empty and the circuit breaker can be closed.

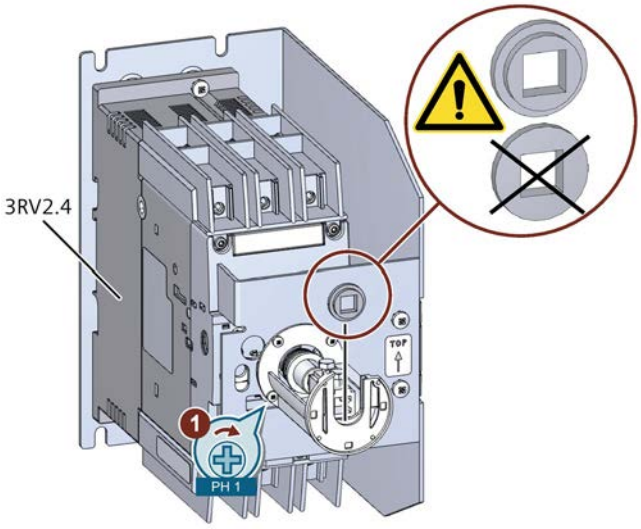

① Attach the 3RV2926-0P shaft support to the 3RV2946-3 door-coupling rotary operating mechanism for harsh conditions. Tighten the screws using a PH 1 screwdriver.
Tightening torque: 0.2 Nm
Make sure that the plastic part supplied is pushed onto the shaft in the correct position so that it is correctly positioned in the groove of the shaft support.

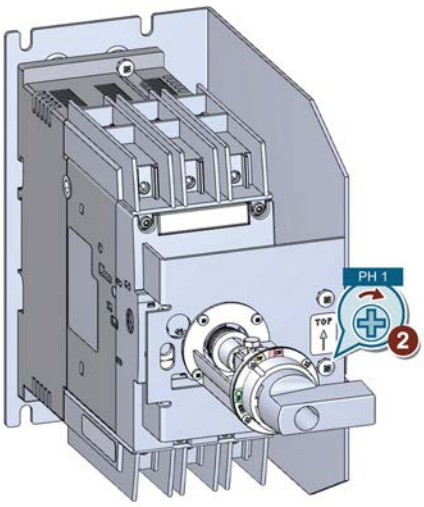

② Screw the supplementary handle 3VA9137-0GC01 (gray) or the supplementary handle 3VA9137-0GC05 (red/yellow) to the shaft support 3RV2926-0P. using a PH 1 screwdriver.
Tightening torque: 0.5 ... 0.6 Nm

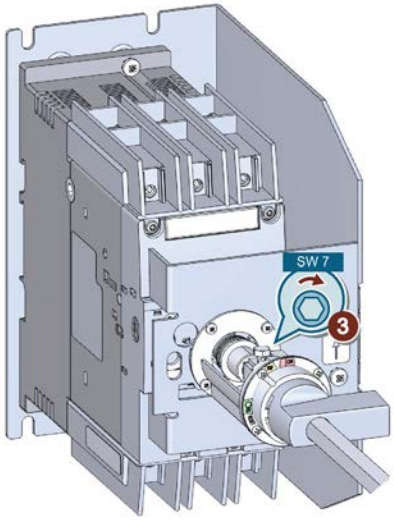

③ Slide the shaft through the supplementary handle 3VA9137-0GC01 (gray) or the supplementary handle 3VA9137-0GC05 (red/yellow) and the shaft support 3RV2926-0P and tighten the shaft using an Allen wrench.
Tightening torque: 2.6 ... 3.0 Nm

11.8.3 Operation

Operating the door-coupling rotary operating mechanism for standard conditions

Open the door

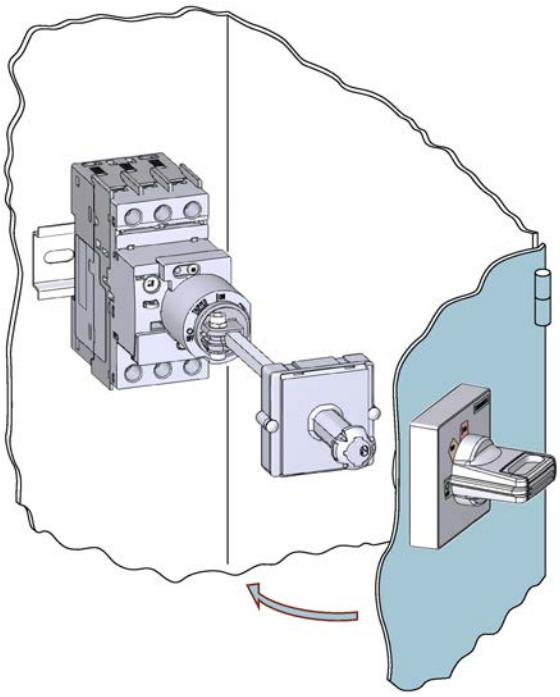

The figures below show how to open the control cabinet door with the door-coupling rotary operating mechanism:

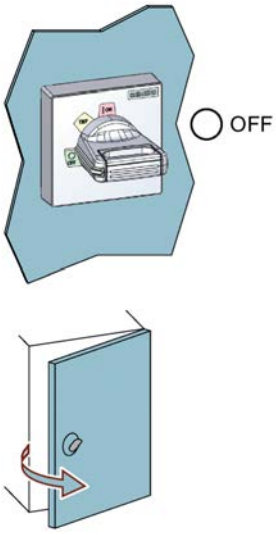

To open the control cabinet door during operation, set the motor starter protector to O (OFF). This will release the extension shaft from the rotary operating mechanism so that you can open the door.

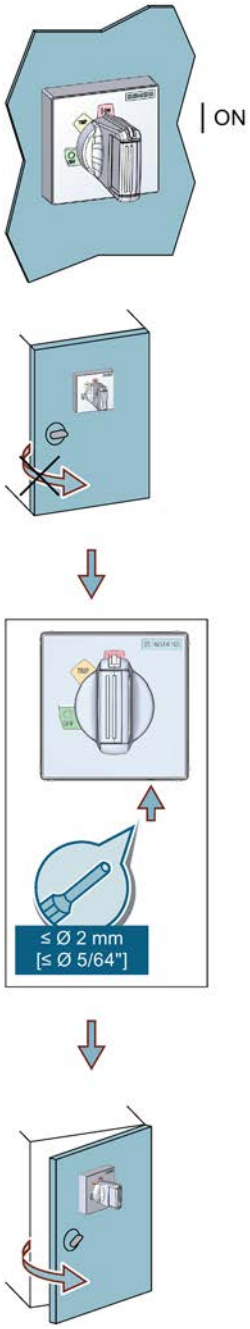

If you need to open the control cabinet door during operation, press the button below to the rotary knob to "override" the interlock.

To close the door during operation (motor starter protector is in I (ON) position), turn the handle 5 to 10 °in the OFF direction to facilitate the engagement of the extension shaft.

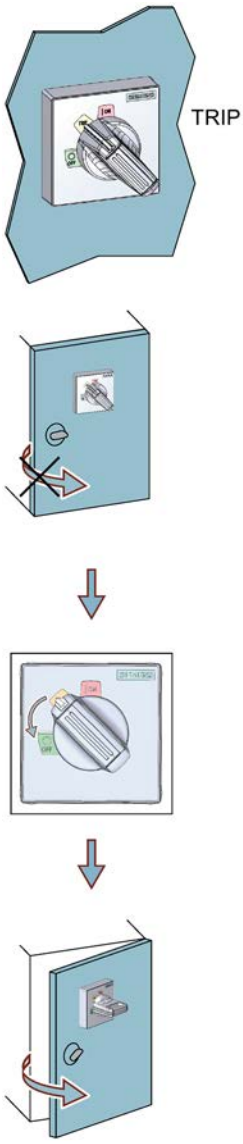

If the motor starter protector is in the TRIP position, you can open the control cabinet door by putting the motor starter protector into the O (OFF) position.

Opening the door with significant force

Note

If the motor starter protector is set to ON and the door is opened with a force of > 150 to 200 N, the extension shaft will break away from the coupling to prevent irreparable damage to the motor starter protector. The motor starter protector remains set to ON.

Locking

The mechanism can be locked outside the control cabinet via the handle.

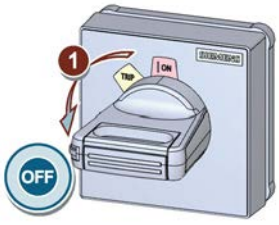

① Set the motor starter protector to O (OFF).

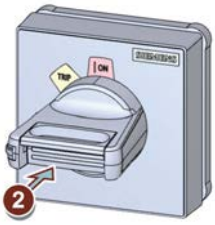

② Push the locking device on the handle backwards.

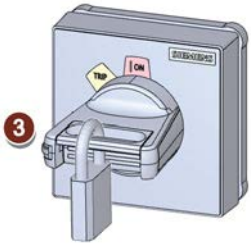

③ Hook the bracket lock into the opening on the handle.

Up to three bracket locks with a maximum bracket diameter of 8.5 mm can be hooked into this opening.

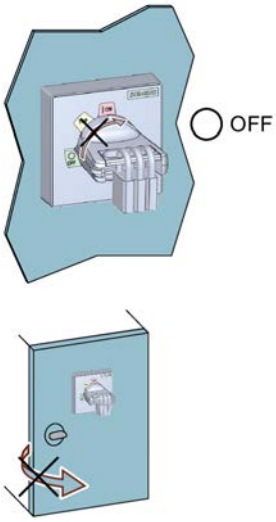

With a hooked-in bracket lock, the handle can no longer be turned into the ON position and the control cabinet door remains closed.

Operating the door-coupling rotary operating mechanism for harsh conditions

Open the door

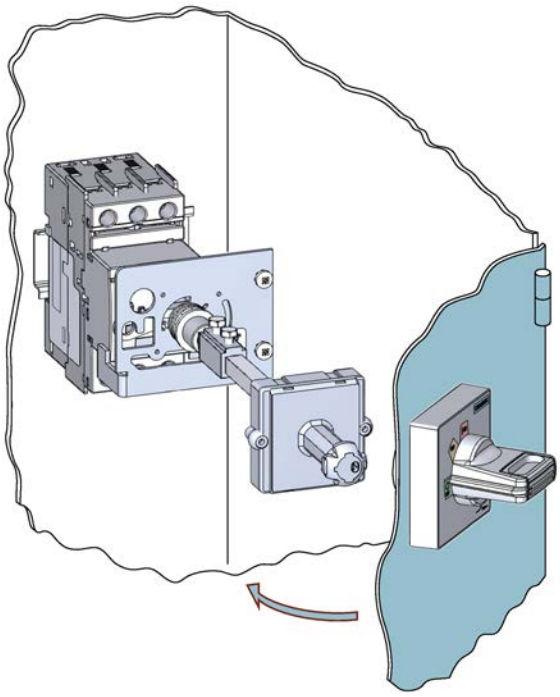

The figures below show how to open the control cabinet door with the door-coupling rotary operating mechanism:

To open the control cabinet door during operation, set the motor starter protector to O (OFF). This will release the extension shaft from the rotary operating mechanism so that you can open the door.

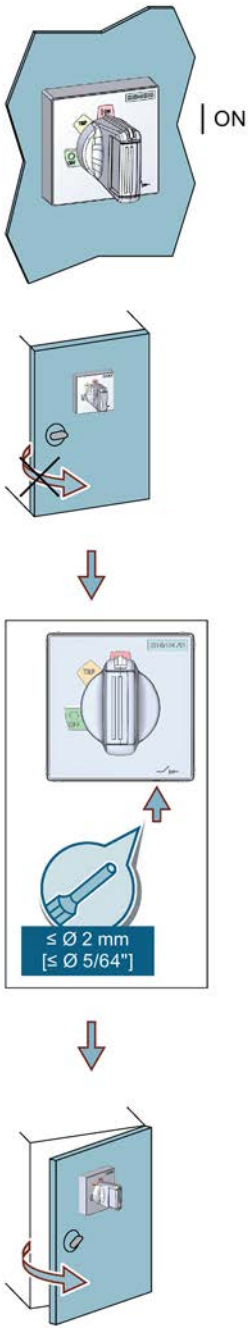

If you need to open the control cabinet door during operation, press the button below to the rotary knob to "override" the interlock.

To close the door during operation (motor starter protector is in I (ON) position), turn the handle 5 to 10 °in the OFF direction to facilitate the engagement of the extension shaft.

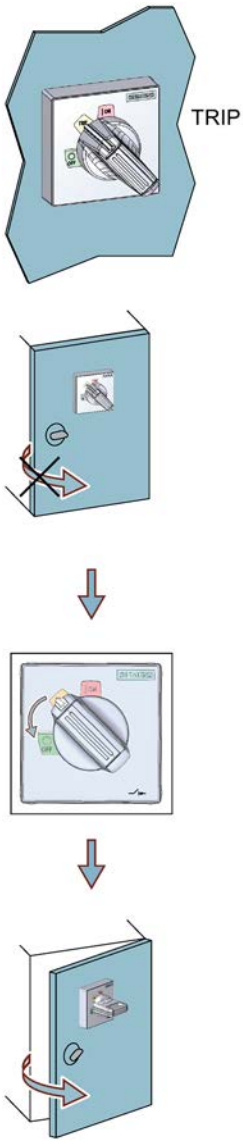

If the motor starter protector is in the TRIP position, you can open the control cabinet door by putting the motor starter protector into the O (OFF) position.

Opening the door with significant force

Note

Opening the door with a force of ≥ 350 N when the motor starter protector is set to I can damage the mechanism beyond repair. The motor starter protector remains active. The mechanism will keep the door closed up to a force of 350 N.

Locking

The mechanism can be locked inside the control cabinet with a bracket lock.

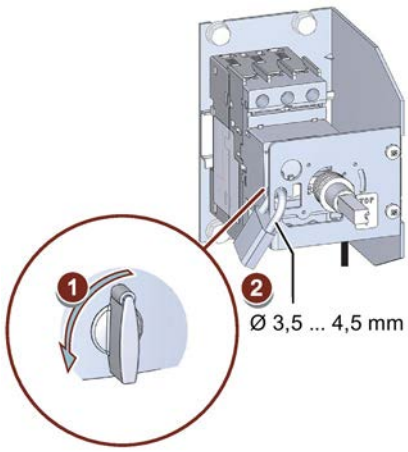

① Set the motor starter protector to O (OFF).

② Secure the motor starter protector against unauthorized closing by locking the cover of the door-coupling rotary operating mechanism with a bracket lock.
Bracket diameter: 3.5 ... 4.5 mm

The mechanism can also be locked outside the control cabinet via the handle.

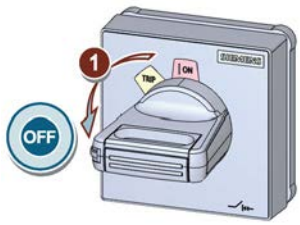

① Set the motor starter protector to O (OFF).

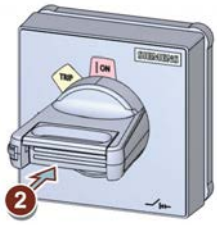

② Push the locking device on the handle backwards.

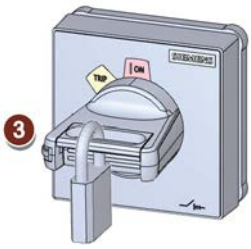

③ Hook the bracket lock into the opening on the handle.
Up to three bracket locks with a maximum bracket diameter of 8.5 mm can be hooked into this opening.

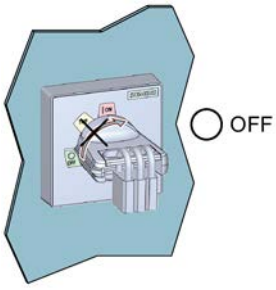

With a hooked-in bracket lock, the handle can no longer be turned into the ON position and the control cabinet door remains closed.

11.9 Enclosures and mounting accessories

11.9.1 Description

General

Plastic enclosures for surface mounting are available for the stand-alone assembly of 3RV1011 motor starter protectors, size S00 ($I_{n\ max}$ = 12 A) and 3RV2 motor starter protectors, sizes S00 ($I_{n\ max}$ = 16 A), S0 ($I_{n\ max}$ = 32 A) and S2 ($I_{n\ max}$ = 65 A). Molded-plastic enclosures and aluminum cast enclosures for flush mounting are available in various dimensions for motor starter protectors in sizes S00 and S0.

In the case of installation in molded-plastic enclosures and aluminum cast enclosures, the maximum rated operational voltage U_e of the motor starter protectors is 500 V.

The enclosures for surface mounting have degree of protection IP55 or IP65 for aluminum cast enclosures; the enclosures for flush mounting also comply with degree of protection IP55 at the front (the flush-mounted section complies with IP20).

When installing motor starter protectors with spring-loaded connections (size S00/S0) in enclosures for surface mounting, the rear cable entries cannot be used.

Motor starter protectors with spring-loaded connections (for 3RV2 in sizes S00 and S0 only) cannot be used in enclosures for flush mounting.

The circuit breakers according to UL 489 (sizes S00 and S0) cannot be used in these enclosures.

Enclosures

They have 2 knockout cable entry openings for cable glands at the top and 2 at the bottom, along with corresponding cable entries scored on the rear. There is a knockout on the top of the enclosure for indicator lights which are available as accessories.

The slim-line enclosure can accommodate a motor starter protector without accessories, with transverse and lateral auxiliary switches. There is no provision for installing a motor starter protector with signaling switch.

The enclosures can either be supplied with a black rotary operating mechanism or with EMERGENCY OFF rotary operating mechanism with red / yellow handle.

In the OFF position, all rotary operating mechanisms can be locked with up to three bracket locks.

Derating when installing 3RV1011 motor starter protectors

A certain derating must be observed when installing 3RV1011 motor starter protectors of size S00 in 3RV1913-1CA00/3RV1913-1DA00/3RV1913-2DA00 enclosures for surface mounting. The following table lists the maximum permissible conventional thermal current at an ambient temperature T_U = 35 °C outside the enclosure.

3RV1011	Maximum permissible conventional thermal current I_{the}
0.16 A	0.16 A
0.2 A	0.2 A
0.25 A	0.25 A
0.32 A	0.32 A
0.4 A	0.4 A
0.5 A	0.5 A
0.63 A	0.63 A
0.8 A	0.8 A
1.0 A	1.0 A
1.25 A	1.25 A
1.6 A	1.6 A
2.0 A	2.0 A
2.5 A	2.5 A
3.2 A	3.2 A
4.0 A	4.0 A
5.0 A	5.0 A
6.3 A	5.5 A
8.0 A	7.0 A
10.0 A	9.0 A
12.0 A	11.0 A

The following table shows the maximum configuration of the motor starter protectors with shunt release, undervoltage release, and lateral and transverse auxiliary switches when mounted in 3RV1913-1CA00/3RV1913-1DA00/3RV1913-2DA00 enclosures for surface mounting.

Maximum permissible attachment				
Maximum 1 lateral auxiliary switch		Maximum 1 transverse auxiliary switch		Shunt trip, undervoltage release [1]
3RV2901-.A	+	3RV2901-1D	+	3RV29.2-.A..
3RV2901-.B		3RV2901-.E		3RV29.2-.C..
3RV2901-.C		3RV2901-.F		3RV29.2-.D..
		3RV2901-.G		

[1] Not for 3RV1913-1CA00

Derating when installing 3RV2.1 and 3RV2.2 motor starter protectors

A certain derating must be observed when installing 3RV2.1 motor starter protectors of size S00 and 3RV2.2 motor starter protectors of size S0 in 3RV1923-1CA00/3RV1923-1DA00/3RV1923-1FA00/3RV1923-1GA00/3RV1923-1DA01/3RV1923-1GA01/3RV1923-2DA00/3RV1923-2GA00 enclosures for surface mounting. The following table lists the maximum permissible conventional thermal current at an ambient temperature T_U = 35 °C outside the enclosure.

3RV2.1 3RV2.2	Maximum permissible conventional thermal current I_{the}
0.16 A	0.16 A
0.2 A	0.2 A
0.25 A	0.25 A
0.32 A	0.32 A
0.4 A	0.4 A
0.5 A	0.5 A
0.63 A	0.63 A
0.8 A	0.8 A
1.0 A	1.0 A
1.25 A	1.25 A
1.6 A	1.6 A
2.0 A	2.0 A
2.5 A	2.5 A
3.2 A	3.2 A
4.0 A	4.0 A
5.0 A	5.0 A
6.3 A	5.5 A
8.0 A	7.0 A
10.0 A	9.0 A
12.5 A	11.0 A
16.0 A	14.0 A
20.0 A	17.0 A
22.0 A	19.0 A
25.0 A	22.0 A
28.0 A	25.0 A
32.0 A	28.0 A

The following table shows the maximum configuration of the motor starter protectors with shunt release, undervoltage release, and lateral and transverse auxiliary switches when mounted in 3RV1923-1CA00/3RV1923-1DA00/3RV1923-1FA00/3RV1923-1GA00/3RV1923-1DA01/3RV1923-1GA01/3RV1923-2DA00/3RV1923-2GA00 enclosures for surface mounting.

Maximum permissible attachment				
Maximum 1 lateral auxiliary switch		Maximum 1 transverse auxiliary switch		Shunt trip, undervoltage release [1]
3RV2901-.A	+	3RV2901-1D	+	3RV29.2-.A..
3RV2901-.B		3RV2901-.E		3RV29.2-.C..
3RV2901-.C		3RV2901-.F		3RV29.2-.D..
		3RV2901-.G		

[1] Not for 3RV1923-1CA00 / 3RV1923-1FA00

Derating when installing 3RV2.3 motor starter protectors

When installing 3RV2.3 size S2 motor starter protectors in the 3RV1933-1DA00 and 3RV1933-1GA00 enclosures for surface mounting, a certain derating must be observed. The following table lists the maximum permitted conventional thermal current.

3RV2.3	**Maximum permissible conventional thermal current I_{the}**	**I_p (max. U_e = 500 V)**
80 A	--	--
73 A	--	--
65 A	59 A	5 kA
59 A	56 A	
52 A	48 A	
45 A	42 A	
40 A	37 A	
36 A	34 A	
32 A	28 A	
25 A	22 A	
20 A	19 A	
17 A	17 A	
14 A	14 A	

Front plates

Many applications require motor starter protectors to be actuated in any type of enclosure. Front plates equipped with a rotary operating mechanism are available for size S00, S0, S2 and S3 motor starter protectors for this purpose.

A holder for size S00 and S0 motor starter protectors is available for the front plates (the motor starter protectors snap into the holder).

The front plates can also be used for 3RV2 motor starter protectors in sizes S00 and S0 with spring-loaded connection.

11.9.2 Mounting

Mounting of enclosure (for 3RV1011 in size S00)

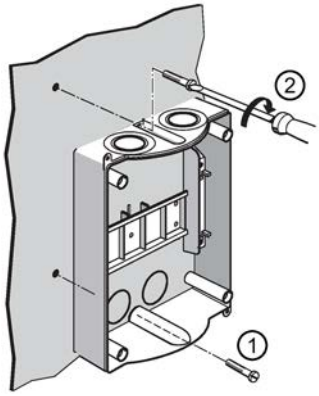

① Mount the lower part of the enclosure on a level surface.

②

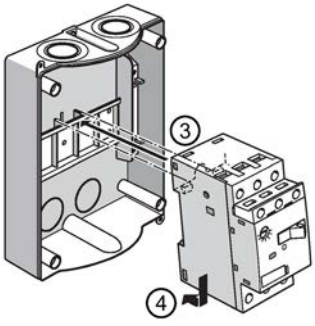

③ Snap the motor starter protector onto the rail in the enclosure as illustrated in the diagram.

④

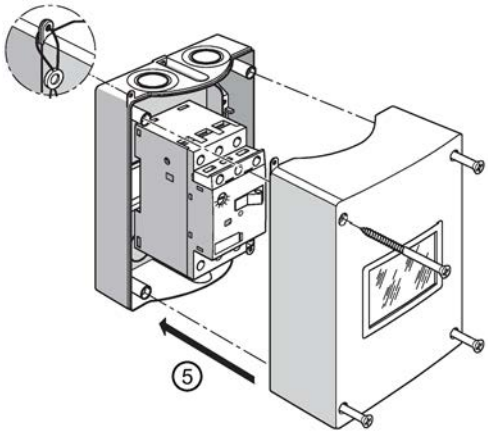

⑤ Screw the upper part of the enclosure onto the lower part of the enclosure.
Tightening torque: 1.2 ... 1.5 Nm
The enclosure can also be sealed with leads on the bottom right and/or top left.

Mounting the enclosure (for 3RV2 in sizes S00, S0 and S2)

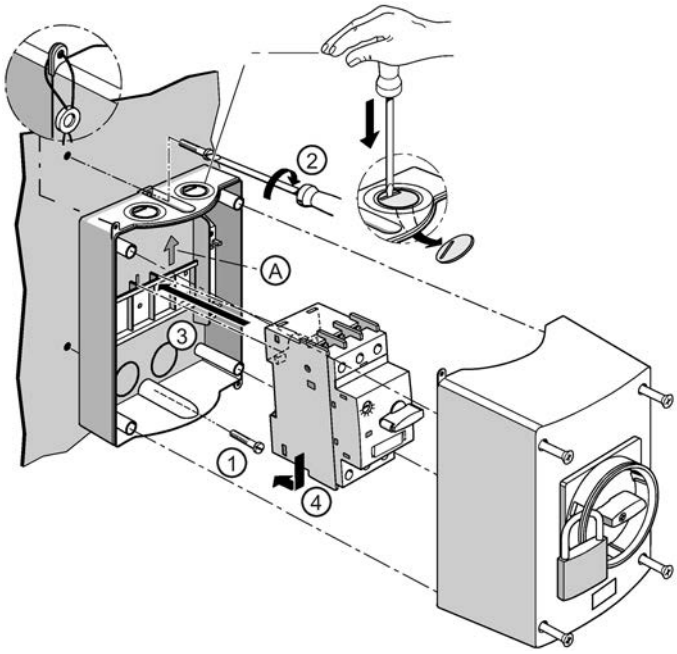

① Mount the lower part of the enclosure on a level surface.
② Make sure that the arrow (A) is pointing up.
③ Snap the motor starter protector onto the rail in the enclosure as illustrated in the diagram.
④ Screw the upper part of the enclosure onto the lower part of the enclosure.
Tightening torque: 1.2 ... 1.5 Nm.
The enclosure can also be sealed with leads on the bottom right and/or top left.

Mounting of flush-mounting enclosure (for 3RV1011 in size S00)

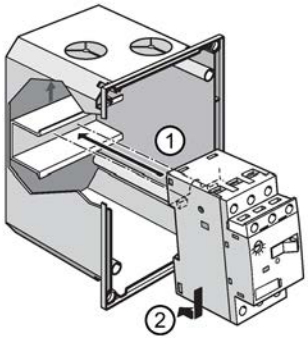

① Snap the motor starter protector onto the rail in the enclosure as illustrated in the diagram.
②

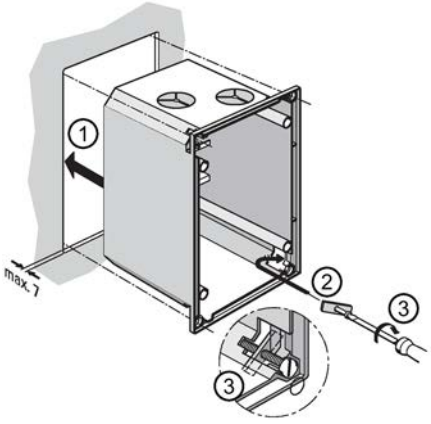

① A cutout measuring 157 x 87 mm and with a radius of the corners of R3 is required to mount
② the flush-mounting enclosure. The enclosure is 96 mm deep.
③ Position the lower part of the enclosure in the cutout.
Secure the enclosure as shown in the zoom view to prevent it from sliding out.

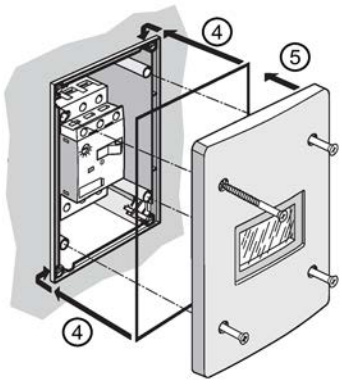

④ Position the seal between the enclosure and the mounting surface as illustrated in the diagram.

⑤ Screw the upper part of the enclosure onto the lower part of the enclosure.
Tightening torque: 1.8 ... 2.2 Nm.

Mounting the enclosure for flush mounting (for 3RV2 in sizes S00 and S0)

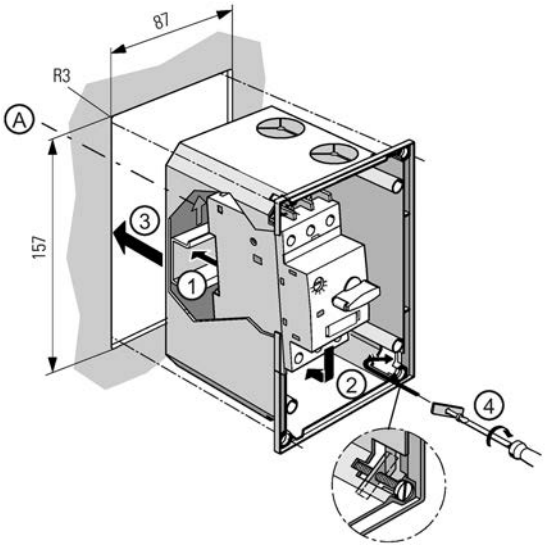

① A cutout measuring 157 x 87 mm and with a radius of the corners of R3 is required to mount
② the flush-mounting enclosure. The enclosure is 96 mm deep.
Snap the motor starter protector onto the rail in the enclosure as illustrated in the diagram. Make sure that the arrow (A) is pointing up.

③ Position the lower part of the enclosure in the cutout.

④ Secure the enclosure as shown in the zoom view to prevent it from sliding out.

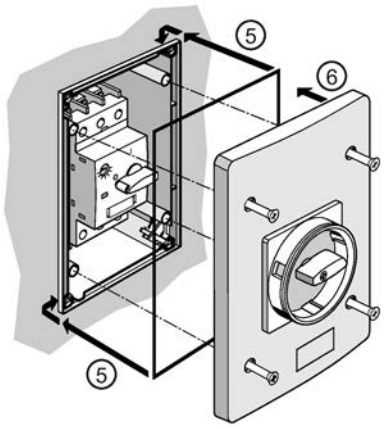

⑤ Position the seal between the enclosure and the mounting surface as illustrated in the diagram.

⑥ Screw the upper part of the enclosure onto the lower part of the enclosure.
Tightening torque: 1.8 ... 2.2 Nm

Disassembling the knob attachment on 3RV2.4 motor starter protectors (size S3)

Before mounting a front plate, the knob attachment of the 3RV2.4 motor starter protector must be disassembled.

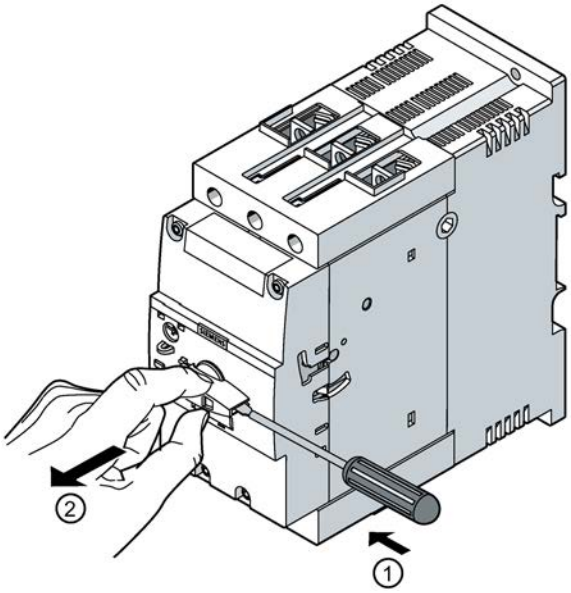

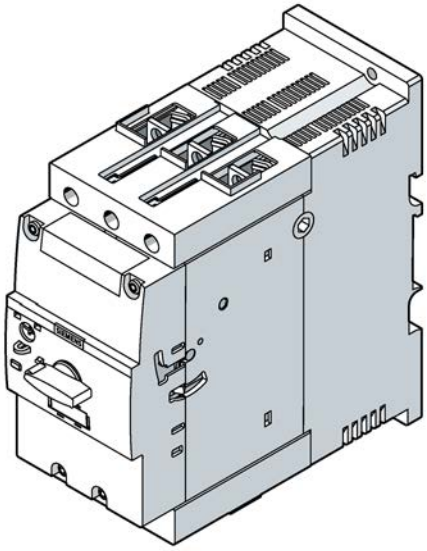

① Slide a screwdriver from the side into the opening on the knob attachment, as shown in the figure.

② Remove the knob attachment from the motor starter protector to the front.

Mounting front plates (for 3RV2 in sizes S00, S0, S2 and S3)

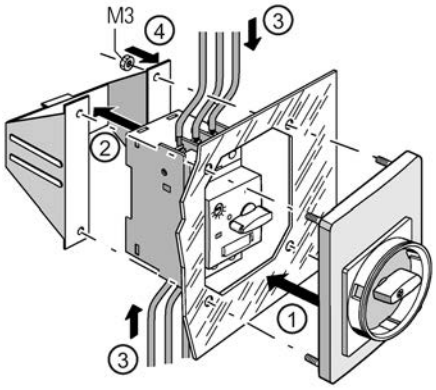

① Insert the rotary operating mechanism into the front plate.
② Snap the motor starter protector onto the holder.
③ Connect the motor starter protector.
④ Screw the front plate and the rotary operating mechanism tight to the holder (use M3 screws).

Note

Note that no holder is available for mounting the front plate of a motor starter protector in size S2 and S3.
Position the motor starter protector and the mounted rotary operating mechanism on the front plate in a suitable position.

11.10 Sealable cover

11.10.1 Description

3RV2908-0P sealable cover

A sealable cover compatible for use with all sizes is available for the motor starter protectors. This cover can also be used for the 3RU21 thermal overload relay.

The sealable cover can be used to secure the rotary button for setting the rated motor current against unauthorized manipulation.

11.10.2 Mounting

Mounting the sealable cover on the motor starter protector

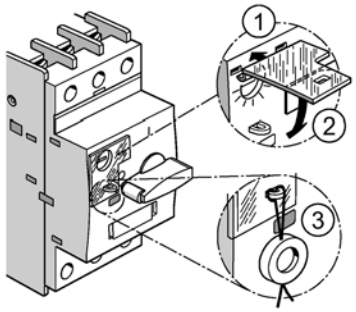

① Attach the hooks on the cover in the openings on the motor starter protector.
② Tilt the cover down.
③ Seal the cover to secure it against unauthorized removal.

11.11 Insulated 3RV1915 (S00/S0) and 3RV1935 (S2) 3-phase busbar system

11.11.1 Description

Insulated 3-phase busbar system

The 3-phase busbar systems provide a straightforward, time-saving, and transparent means of supplying power to 3RV motor starter protectors with screw terminals. They can be used for the various types of motor starter protector. The structure of the insulated 3-phase busbar system was tested at UL with "Surrounding Air Temperature 40 °C".

Note

Exceptions

The 3RV19.5 3-phase busbars are generally unsuitable for 3RV21 motor starter protectors (for motor protection with overload relay function). The devices must also not be used with 3RV29.8-1A disconnector modules, 3RV2928-1H Type E terminals (for sizes S00 and S0) or 3RV29.8-1K phase barriers.

Extending the busbars

3RV1915 busbars are designed for between 2 and 5 size S00/S0 motor starter protectors. In the case of size S2, 3RV1935 busbars are available for 2 to 4 motor starter protectors. They can be extended at will by clamping the terminal lugs of a second busbar (rotated by 180°) underneath the terminals of the last respective motor starter protector on the first busbar.

Combination of sizes S0 and S00

It is possible to combine these sizes of motor starter protectors of the 3RV2 series. Power is fed in via corresponding infeed terminals.

A combination of 3RV1011 and 3RV2 motor starter protectors/circuit breakers of size S00 and S0 is possible. Corresponding 3RV1915-5DB connecting pieces for 3-phase busbars are offered for this purpose.

Touch protection and short-circuit stress

The 3-phase busbar systems have finger-safe shock protection. They have been dimensioned to withstand the level of short-circuit stress that can occur on the output side of the connected motor starter protectors.

Type E starters

The 3-phase busbar systems can also be used to construct "type E starters" in sizes S00 (not 3RV1011), S0 and S2 according to UL / CSA. However, special infeed terminals have to be used for this purpose.

Circuit Breaker 3RV27 / 3RV28

The 3-phase busbar systems can also be used to construct 3RV27 / 3RV28 circuit breakers in sizes S00 and S0. For this purpose, the infeed terminals must be disconnected on the infeed side of the circuit breakers and special infeed terminals must be used for supplying the group.

11.11.2 Versions

3-phase busbar versions

For the infeed of several motor starter protectors with screw terminals for side-by-side mounting on DIN rails, insulated, with touch protection

Table 11- 4 3-phase busbars (size S00/S0)[1)]

Article No.		Number of motor starter protectors that can be connected		Incl. auxiliary release	Rated current I_n at 690 V
	Modular spacing [mm]	Without lateral accessories	Incl. lateral auxiliary switch		
3RV1915-1..	45	2 / 3 / 4 / 5	-	-	63
3RV1915-2..	55	-	2 / 3 / 4 / 5	-	63
3RV1915-3..	63	-	-	2 / 4	63

1) Not suitable for 3RV21 motor starter protectors for motor protection with overload relay function.

Table 11- 5 3-phase busbars (size S2)[1)]

Article No.		Number of motor starter protectors that can be connected		Incl. auxiliary release	Rated current I_n at 690 V
	Modular spacing [mm]	Without lateral accessories	Incl. lateral accessories		
3RV1935-1..	55	2 / 3 / 4	-	-	108
3RV1935-3..	75[2)]	-	2 / 3 / 4	2 / 3 / 4	108

1) Not suitable for 3RV21 motor starter protectors for motor protection with overload relay function.

2) For motor starter protectors with lateral accessories.
Auxiliary releases and lateral auxiliary switches/signaling switches cannot be used in combination.

Table 11- 6 Derating (3RV2.3 + 3RV1935-1. / 3RV1935-3.)

3RV2.3 + 3RV1935-1. / 3RV1935-3.	
3RV2.3	**Rated current $I_{n\ max}$**
80 A	78 A
73 A	71 A
65 A	63 A
59 A	57 A
≤ 52 A	52 A

3RV2.3 + 3RV1935-1. / 3RV1935-3.	UL / CSA: Surrounding Air Temperature 40 °C

3-phase infeed terminal

The infeed terminal supports larger conductor cross-sections than is the case with direct connection on the motor starter protector.

- Infeed terminal from above
- Infeed terminal from below (3RV1 and 3RV2 only, in sizes S00 and S0)

Note

Space requirement of the infeed terminal from below

The infeed terminal with connection from below is connected instead of a motor starter protector. You will, therefore, need to take the space requirements into account when configuring the 3-phase busbars.

Article No.	Conductor cross-section			Tightening torque	For motor starter protector size
	Solid or stranded	Finely stranded with end sleeve	AWG cables, solid or stranded		
	mm²	mm²	AWG	Nm	
	Connection from above				
3RV1915-5A	2.5 ... 25	2.5 ... 16	10-4	3 ... 4	S00 (3RV1011)
3RV2925-5AB	2.5 ... 25	2.5 ... 16	10-4	3 ... 4	S00, S0
3RV2935-5A	2 x (2.5 ... 50) 1 x (2.5 ... 70)	2 x (2.5 ... 35) 1 x (2.5 ... 50)	2 x (10 to 1/0) 1 x (10 to 2/0)	4 ... 6	S2
	Connection from below[1)]				
3RV2915-5B	2.5 ... 25	2.5 ... 16	10-4	Input: 4, Output: 2 ... 2.5	S00, S0

[1)] This terminal is connected in place of a switch, please take the space requirement into account.

3-phase infeed terminal for installing "type E starters"

- Infeed terminal from above

Article No.	Conductor cross-section			Tightening torque	For motor starter protector size
	Solid or stranded	Finely stranded with end sleeve	AWG cables, solid or stranded		
	mm²	mm²	AWG	Nm	
	Connection from above				
3RV2925-5EB	2.5 ... 25	2.5 ... 16	10-4	3 ... 4	S00 (not 3RV1011), S0
3RV2935-5E	2 x (2.5 ... 50) 1 x (2.5 ... 70)	2 x (2.5 ... 35) 1 x (2.5 ... 50)	2 x (10 to 1/0) 1 x (10 to 2/0)	4 ... 6	S2

Cover cap for terminal lugs

Cover caps provide touch protection for reserve slots:

- Sizes S00/S0: article no. 3RV1915-6AB
- Size S2: article no. 3RV1935-6A

These cover caps need to be removed before extending the busbars.

3-phase busbars for constructing "circuit breakers"

Note

Use the infeed terminal 3RV2925-5EB to supply the group.

Note

When "circuit breakers" with 3-phase busbars are constructed, connection of the following lateral auxiliary switches is not permitted:

- 3RV2901-1A / 3RV2901-2A
- 3RV2901-1B / 3RV2901-2B
- 3RV2901-1C / 3RV2901-2C
- 3RV2901-1J

Table 11- 7 Derating (3RV2711 / 3RV2811 + 3RV2925-EB + 3RV1915-..B and 3RV2721 / 3RV2821 + 3RV2925-EB + 3RV1915-..B)

	Rated current I_n	Rated current $I_{n\ max}$	Infeed terminal		3-phase busbars
3RV2711 3RV2811	0.16 ... 12.5 A	100%	3RV2925-5EB	+	3RV1915-.AB 3RV1915-.BB 3RV1915-.CB 3RV1915-.DB
3RV2711 3RV2811	15 A	100%	3RV2925-5EB	+	3RV1915-2AB / 3RV1915-3AB 3RV1915-2BB 3RV1915-2CB / 3RV1915-3CB 3RV1915-2DB
3RV2711 3RV2811	15 A	80%	3RV2925-5EB	+	3RV1915-1AB 3RV1915-1BB 3RV1915-1CB 3RV1915-1DB
3RV2721 3RV2821	20 A 22 A	80%	3RV2925-5EB	+	3RV1915-.AB 3RV1915-.BB 3RV1915-.CB 3RV1915-.DB

3RV2711 / 3RV2811 + 3RV2925-EB + 3RV1915-..B and 3RV2721 / 3RV2821 + 3RV2925-EB + 3RV1915-..B	**UL / CSA: Surrounding Air Temperature 40 °C**

11.11.3 Mounting

Mounting with 3-phase busbars

Note
Current carrying capacity
When extending the busbars, please take their current carrying capacity into account.

The diagrams below illustrate the mounting procedure for the 3-phase busbar system:

3RV2 size S00 / S0

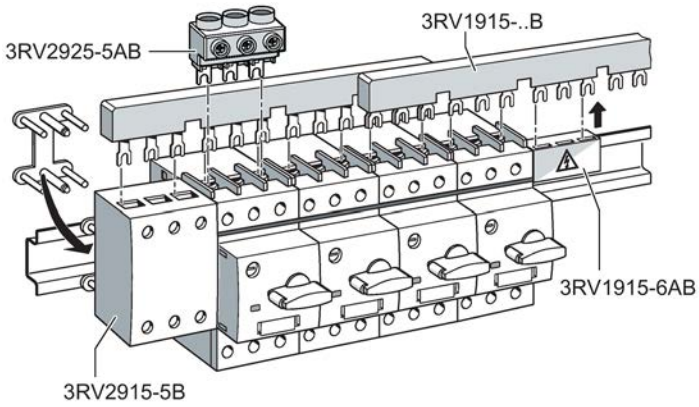

Figure 11-4 Mounting with 3-phase busbar (3RV2 size S00 / S0)

3RV2 size S00 / S0 with 3RV1011

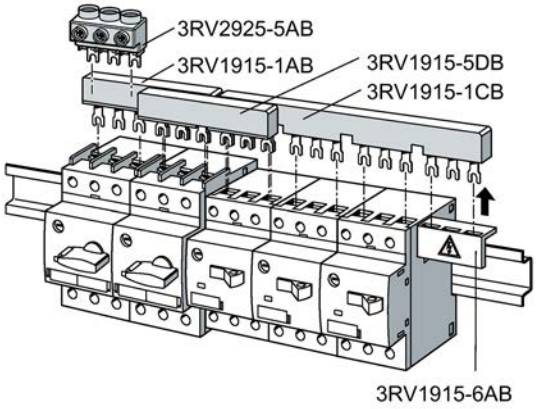

Figure 11-5 Mounting with 3-phase busbar (3RV2 size S00 / S0 with 3RV1011)

3RV2711 / 3RV2721 / 3RV2811 / 3RV2821 size S00 / S0

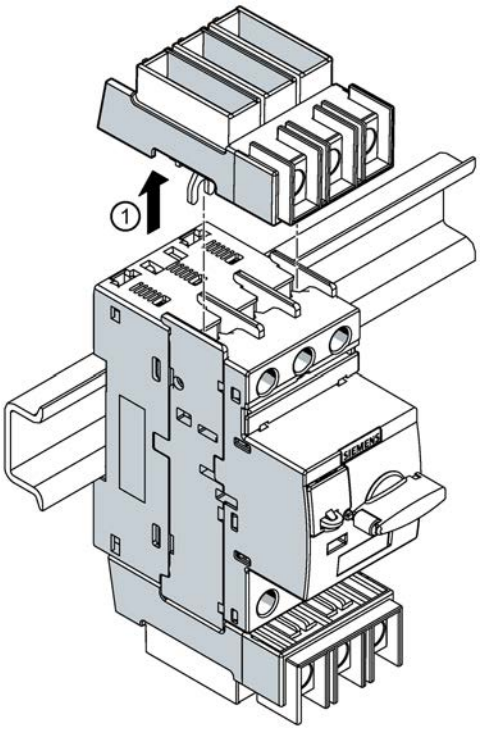

Figure 11-6 Installation with 3-phase busbars (3RV2711 / 3RV2721 / 3RV2811 / 3RV2821 size S00 / S0)

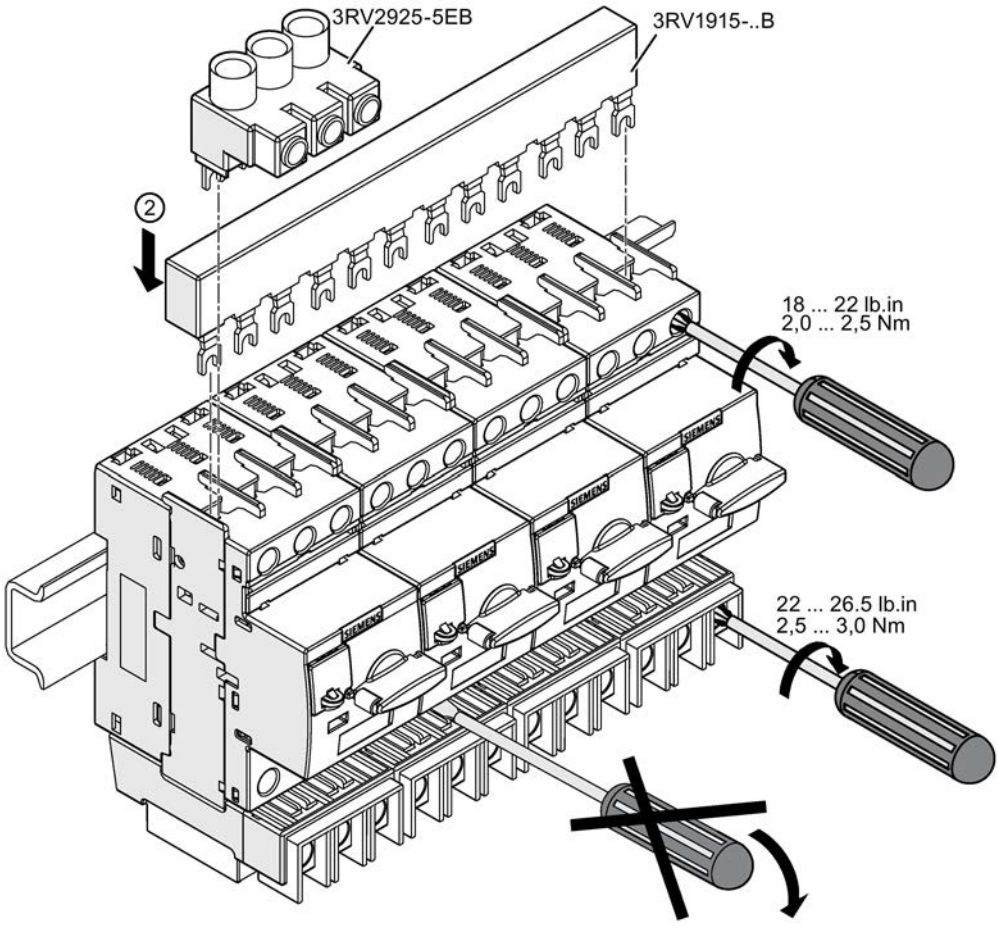

Figure 11-7 Installation with 3-phase busbars (3RV2711 / 3RV2721 / 3RV2811 / 3RV2821 size S00 / S0)

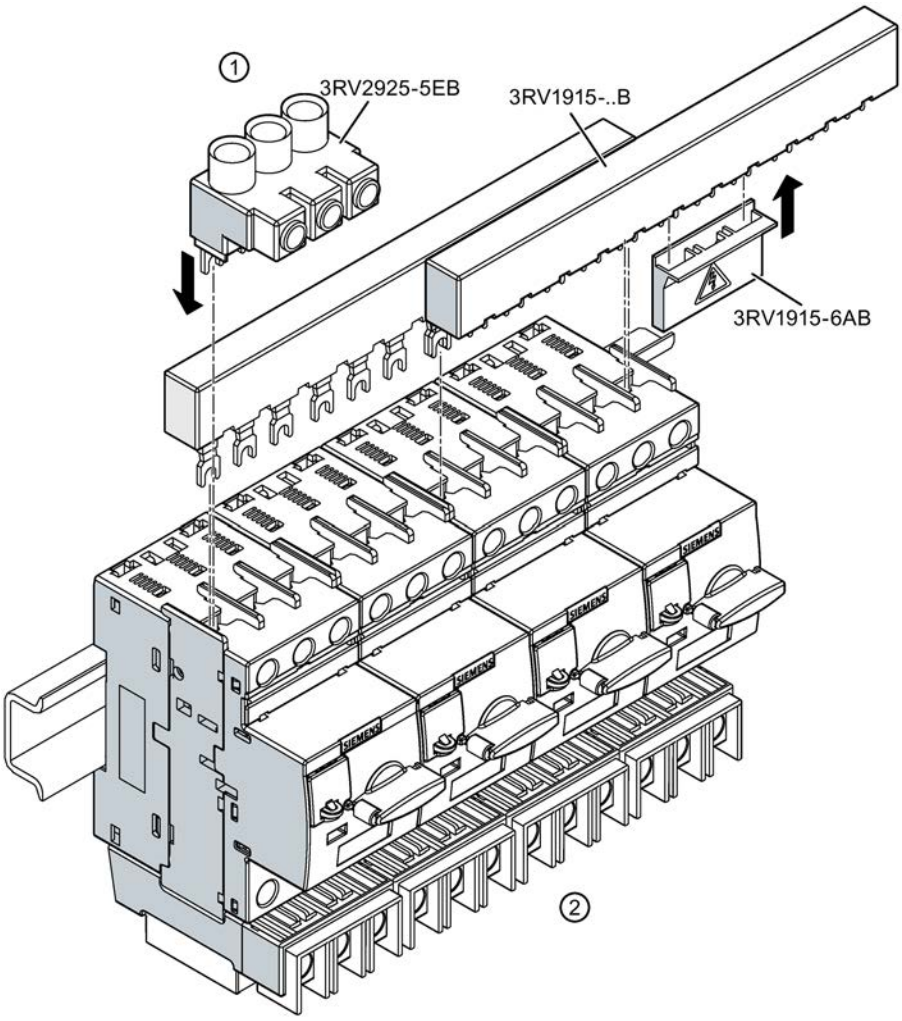

① Infeed side

② Load side

Figure 11-8 Installation with 3-phase busbars (3RV2711 / 3RV2721 / 3RV2811 / 3RV2821 size S00 / S0)

3RV2 size S2

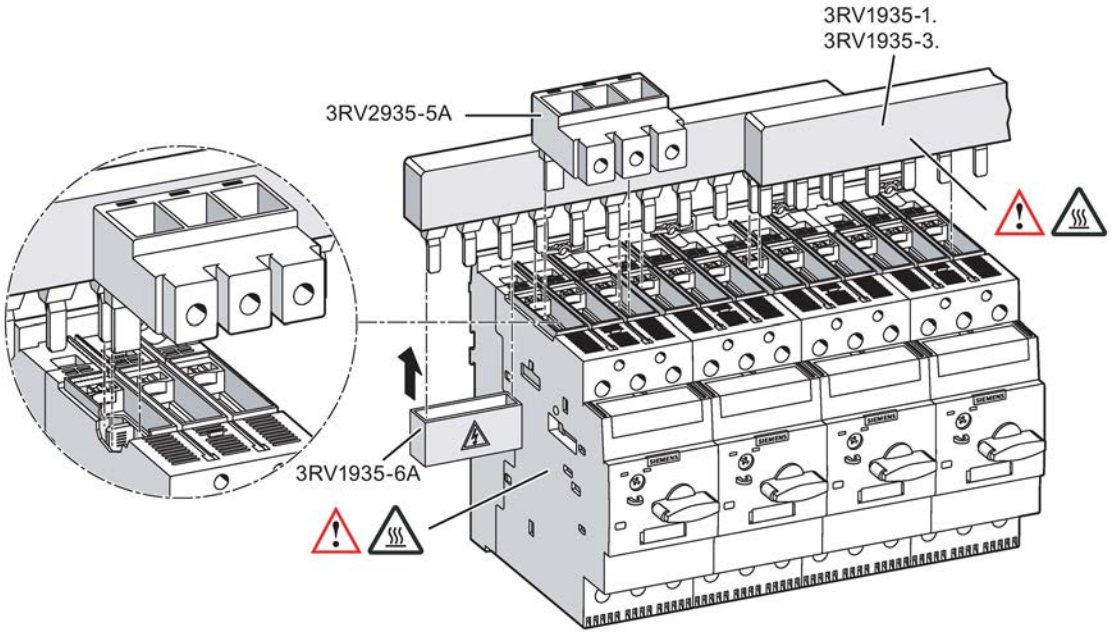

Figure 11-9 Mounting with 3-phase busbar (size S2)

WARNING
Hot surface! Risk of serious injury!
Never touch the side surface with bare hands, there is a risk of serious burns.

11.12 8US busbar adapter

11.12.1 Description

8US 3-phase busbar adapter

To save space when installing the motor starter protectors and to save time and money when implementing the infeed, busbar adapters are used to attach the motor starter protectors directly to busbar systems with center-to-center clearance of 60 mm.

The busbar adapters for busbar systems with a center-to-center clearance of 60 mm are suitable for copper busbars in widths of 12 mm through 30 mm. The busbars can be 5 mm or 10 mm thick.

The motor starter protectors snap onto the adapter and are connected at the input side. This ready-to-use unit plugs directly onto the busbar systems, thereby taking care of mechanical fastening and electrical connection at the same time.

The 8US 3-phase busbar adapter was tested at UL with "Surrounding Air Temperature 40 °C".

Reference

For other busbar adapters, see the Catalog Siemens Low-Voltage Power Distribution LV10.1.

11.12.2 Versions

Busbar systems for 60 mm system

For copper busbars according to DIN 46433:

- Width: 12 mm to 30 mm
- Thickness: 5 mm or 10 mm
- and for T and I special profiles

Article No.	Size	Rated current	Connecting cable	Adapter length	Adapter width	Rated voltage
		A	AWG	mm	mm	V
for motor starter protectors with screw terminals						
8US1251-5DS10	S00/S0	25	12	200	45	690
8US1251-5DT10	S00/S0	25	12	260	45	690
8US1251-5NS10	S0	32	10	200	45	690
8US1251-5NT10	S0	32	10	260	45	690
8US1261-5MS13	S2	80	4	200	55	690
8US1261-6MT10	S2	80	4	260	55	690
8US1211-6MT10[1)]	S2	80	4	260	118	690
8US1211-4TR00	S3	100	4	215	72	690
for motor starter protectors with spring-loaded terminals						
8US1251-5DS11	S00/S0	25	12	200	45	690
8US1251-5DT11	S00/S0	25	12	260	45	690
8US1251-5NS11	S0	32	10	200	45	690
8US1251-5NT11	S0	32	10	260	45	690

1) Assembly kit for load feeders for reversing starters consisting of motor starter protectors and two contactors.

Table 11- 8 Derating (3RV2.3 + 8US1261-5MS13)

3RV2.3 + 8US1261-5MS13	
3RV2.3	**Rated current $I_{n\ max}$**
80 A	78 A
73 A	71 A
65 A	63 A
59 A	57 A
≤ 52 A	52 A

3RV2.3 + 8US1261-5MS13	**UL / CSA: Surrounding Air Temperature 40 °C**

Table 11- 9 Derating (3RV2.4 + 8US1211-4TR00)

3RV2.4 + 8US1211-4TR00		
	Rated current $I_{n\ max}$	**Ambient temperature $T_{a\ max}$**
3RV2.4	97 %	60 °C
	100 %	55 °C

3RV2.4 + 8US1211-4TR00	**UL / CSA: Surrounding Air Temperature 40 °C**

Accessories

The following accessories are available for busbar adapters:

- Device holder for lateral mounting on busbar adapters

Article No.	Adapter length	Adapter width
	mm	mm
8US1250-5AS10	200	45
8US1250-5AT10	260	45

- Lateral modules that can be attached on both sides for widening adapters

Article No.	Adapter length	Adapter width
	mm	mm
8US1998-2BJ10	200	9

- Spacer to fix the feeder onto the busbar adapter (article no. 8US1998-1BA10)
- Vibration and shock kit (size S2) for increased vibration and shock load (article no. 8US1998-1DA10)

Reference

More information ...	Can be found in the chapter titled ...
About load feeders on busbar systems	"List of references" under "Manuals - SIRIUS Modular System (Page 280)" in the "SIRIUS - SIRIUS 3RA load feeders" manual.

11.12.3 Mounting

Prerequisites

DANGER

Hazardous voltage!

Will cause death or serious injury.

Turn off and lock out all power supplying this device before working on this device.

Adjusting the 8US busbar adapter for the busbar system

The busbar adapter can be adjusted to suit the following busbar thicknesses:

- 5 mm (delivery condition)
- 10 mm

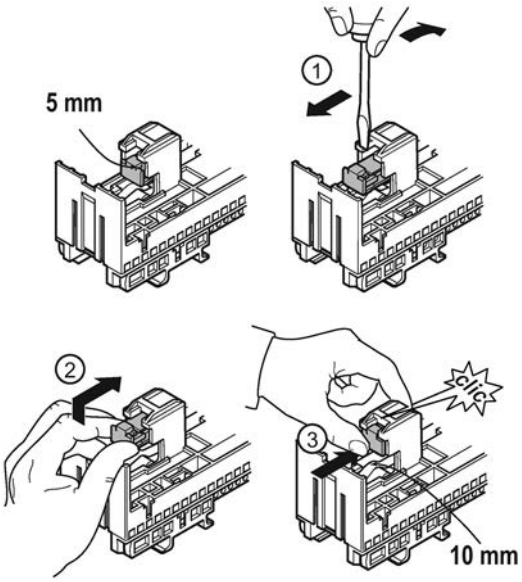

① Push the 3 fastening blocks down.

② Adjust the fastening blocks in accordance with the busbar thickness (5 mm/10 mm).

③ Push the fastening blocks up until they engage.

Mounting the motor starter protector on the busbar adapter

The diagrams below illustrate how to mount the motor starter protector on the busbar adapter (8US):

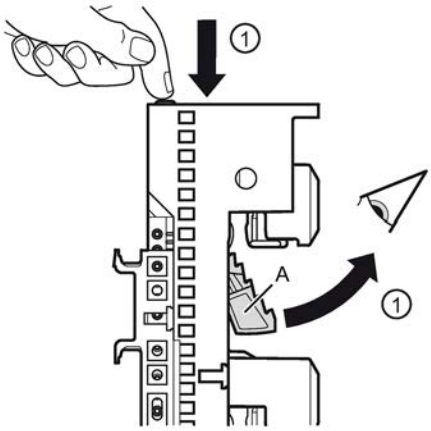

① Press the button on the top of the busbar adapter to release the holder. The holder (A) should flip out from the front of the busbar adapter.

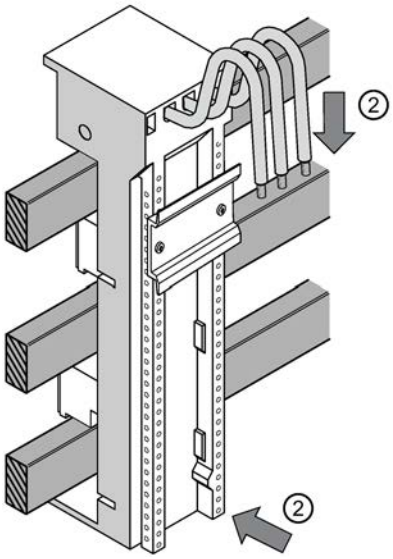

② Attach the busbar adapter to the busbars from above.

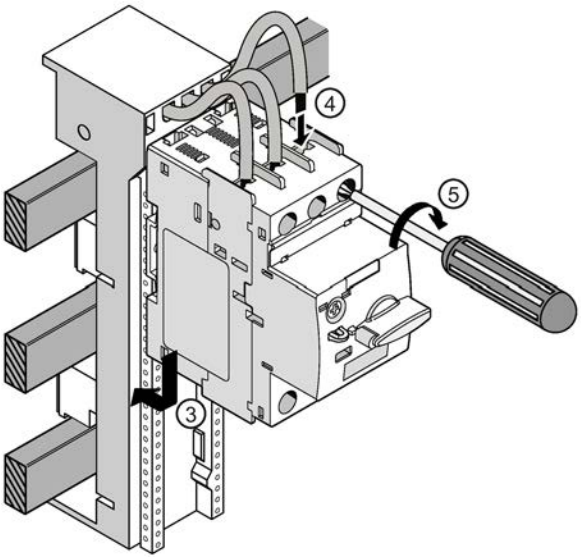

③ Snap the motor starter protector onto the DIN rail to connect it to the busbar adapter.

④ Connect the wiring from the busbar adapter to the motor starter protector's main circuit terminal.

⑤ Tighten the screws on the screw terminal.

Check that the cables are clamped.

Mounting the motor starter protector on the 8US1216-5AT80 /8US1216-5AS80 busbar adapter

The diagrams below illustrate how to mount the motor starter protector on the busbar adapter (8US):

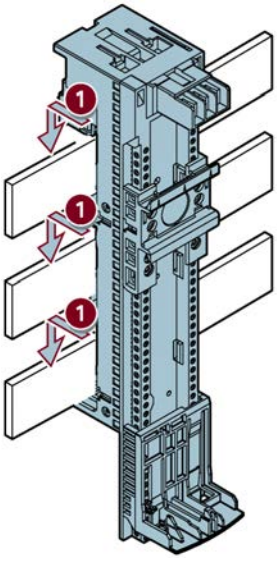

① Attach the busbar adapter to the busbars from above.

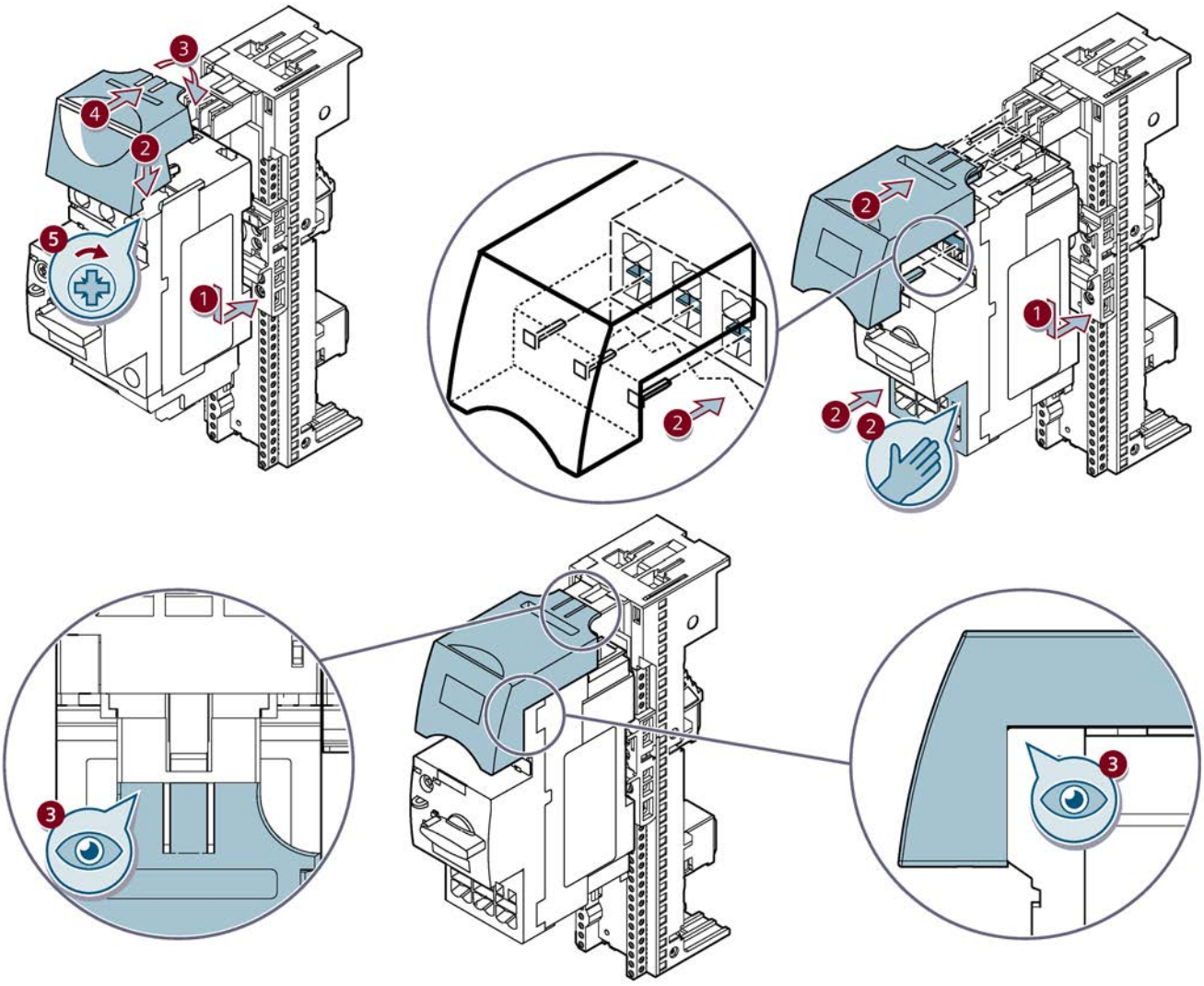

① Snap the motor starter protector onto the DIN rail to connect it to the busbar adapter.
② Snap the cable connector onto the motor starter protector.
③ Check that the cable connector is firmly fitted.

11.12.4 Disassembly

Prerequisites

DANGER

Hazardous voltage!

Will cause death or serious injury.

Turn off and lock out all power supplying this device before working on this device.

Mounting sequence

Note

The motor starter protector/feeder can be disassembled from the 8US busbar adapter either before or after the 8US busbar adapter has been removed from the busbars.

Disassembly of the busbar adapter from the busbar system

The diagrams below illustrate how the busbar adapter is disassembled from the busbar system:

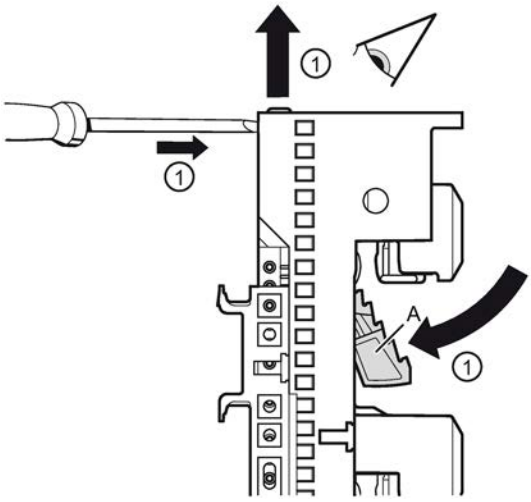

① From the front, insert a screwdriver into the right-hand opening on the busbar adapter and lock the holder (A). The button on the top of the busbar adapter should spring up.

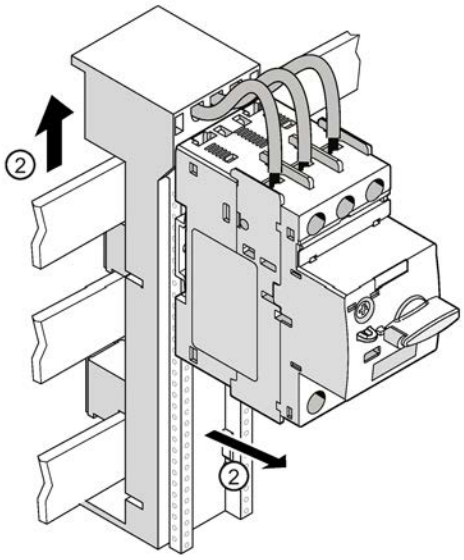

② Remove the busbar adapter from the busbars. To do this, you will first need to push it up slightly so that you can remove it by pulling it off toward you.

11.13 3RV2917 infeed system

11.13.1 Description

Overview

The 3RV29 infeed system provides a convenient means of feeding in and distributing power for a group of several 3RV1011 motor starter protectors and 3RV2 motor starter protectors or complete load feeders with screw-type and spring-loaded connections in sizes S00 and S0 (exception: this system cannot be used for 3RV21 motor starter protectors).

The system is based on a basic module complete with a lateral infeed (3-phase busbar with infeed). This infeed with spring-type terminals is mounted on the right or left depending on the version and can be supplied with a maximum conductor cross-section of 25 mm^2 (with end sleeve). A basic module has two slots onto each of which a motor starter protector can be snapped.

Expansion modules (3-phase busbars for system expansion) are available for expanding the system. An expansion plug is used to connect the individual modules.

The electrical connection between the 3-phase busbars and the motor starter protectors is established using connectors. The complete system can be mounted on a TH 35 standard mounting rail to IEC 60715 and can be expanded as required up to a maximum current carrying capacity of 63 A.

The simple and time-saving plug-in connections mean that the system can be set up easily and in next to no time. The lateral infeed means that the system does not take up as much space in the control cabinet either. The additional overall height required for the infeed unit is only 30 mm. The option to have the infeed on both sides maximizes flexibility where the configuration of the control cabinet is concerned: Infeed on left-hand or right-hand side as well as infeed on one side and outfeed on the other side to supply further loads with power are all possible. As well as the integration of SIRIUS motor starter protectors, a terminal block with spring-loaded-connections in conjunction with a DIN rail also supports the integration of 1-/2-/3-phase components such as 5SY miniature circuit breakers or SIRIUS relay components.

The 3RV29 infeed system has UL approval and is approved for assembling the "Self-Protected Combination Motor Controller" (type E starter), and the "Type F-Starter" (type E and contactor), as well as for assembling 3RV27 / 3RV28 circuit breakers according to UL 489.

Note

The cable connector can be removed for replacing load feeders or motor starter protectors in the energized state (load-free state). The motor starter protector must first be switched off.

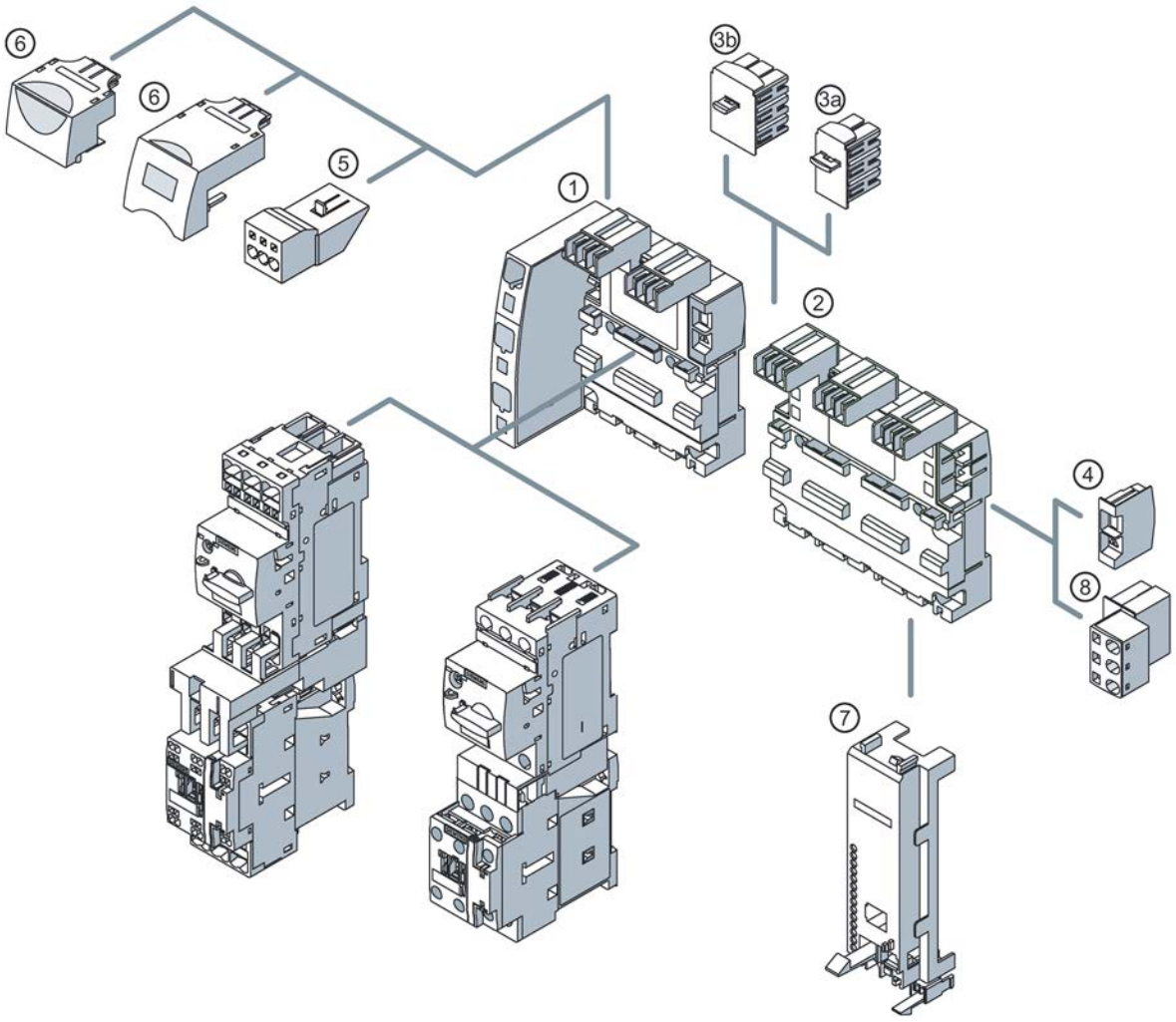
6
6
5
1
3b
3a
2
4
8
7

3-phase busbars with infeed (3RV2917-1A, 3RV2917-1E) ①

A 3-phase busbar with infeed is required for connecting the energy supply. These modules comprise an infeed module and 2 slots for each motor starter protector. A choice of two versions with infeed on the left- or right-hand side is available. Power is fed in via spring-loaded connections. The spring-loaded terminals support an infeed of up to 25 mm^2 with end sleeve. An end cover is also supplied with every module.

Note

Protection of the infeed system

Depending on the conductor cross-section "A" used, the upstream protection device must not exceed the values in the following table.

3RV2917-1A / 3RV2917-1E		
Conductor cross-section "A"	**$I_{d\ max}$**	**I^2t_{max}**
4.0 mm^2	< 9.5 kA	85 kA^2s
6.0 mm^2	< 12.5 kA	140 kA^2s
10.0 mm^2	< 15 kA	180 kA^2s
16.0 mm^2 25.0 mm^2	< 19 kA	440 kA^2s

3-phase busbars for system expansion (3RV2917-4A, 3RV2917-4B) ②

The 3-phase busbars for system expansion enable the system to be expanded. Users can choose modules with 2 or 3 slots. The system can be expanded as required up to a maximum current carrying capacity of 63 A. An expansion plug is also supplied with each module.

Expansion plug (3RV2917-5BA00) ③a

The expansion plug is used to establish the electrical connection of adjacent 3-phase busbars. The current carrying capacity of this plug equals 63 A. One expansion plug is supplied with each three-phase busbar for system expansion. Additional expansion plugs are, therefore, only required as spare parts.

Extra-wide expansion plug (3RV2917-5E) ③b

The extra-wide expansion plug establishes the electrical connection between two 3-phase busbars. As such, it performs the same function as the 3RV2917-5BA00 expansion plug; the electrical characteristics (e.g. current carrying capacity 63 A) are identical.

This 3RV2917-5E expansion plug is 10 mm wider than the 3RV2917-5BA00 expansion plug so that there is a distance of 10 mm between the connected 3-phase busbars when the plug is connected. This distance can be used to lay the auxiliary and control current wiring ("wiring duct"). Motor starter protectors and contactors can be wired from below, so the complete cable duct above the system can be omitted.

End cover (3RV2917-6A) ④

The end cover is used to cover the 3-phase busbars at the open end of the system. This cover is therefore only required one for each system. An end cover is supplied with each 3-phase busbar with infeed. Additional end covers are, therefore, only required as spare parts.

Terminal block for device infeed (3RV2917-1FA00) ⑤

A new addition to the system is a connector for outfeeding to a device slot within a module. This offers the option not only of connecting three-phase loads to the system, but also of integrating single-phase loads into the infeed system.

Connector ⑥

The connectors are used to establish the electrical connection between the 3-phase busbar and the 3RV2 motor starter protector. There are various versions:

- 3RV2 motor starter protector, size S00
  - With screw terminals (3RV2917-5CA00)
  - With spring-loaded terminals (3RV2917-5AA00)
- 3RV2 motor starter protector, size S0
  - With screw terminals (3RV1927-5AA00)
  - With spring-loaded terminals (3RV2927-5AA00)
- 3RV1011 motor starter protector, size S00
  - With screw terminals (3RV1917-5CA00)

Note

The cable connector can be removed for replacing load feeders or motor starter protectors in the energized state (load-free state). The motor starter protector must first be switched off.

Contactor bases (3RV2917-7AA00 and 3RV2927-7AA00) ⑦

Load feeders can be assembled in the system using size S00 and S0 contactor bases. The contactor bases are suitable for size S00 and S0 contactors with spring-loaded terminals and screw terminals and are simply snapped onto the 3-phase busbars. Both direct-on-line and reversing starters are possible. One contactor base is required for direct-on-line starters and two for reversing starters.

To assemble load feeders for reversing feeders, the contactor bases can be arranged next to one another (overall width 90 mm). (In this case, mechanical interlocking of the contactors is possible.) The contactor bases (size S0) are also suitable for size S00 and S0 soft starters with screw terminals.

The infeed system has been designed for installation on a 35 mm DIN rail with 7.5 mm overall depth. These DIN rails provide the contactor base with a stable mounting surface. When using DIN rails with a depth of 15 mm, the spacer connected to the underside of the contactor base has to be knocked out and attached to the counterpart, which is also located on the underside. This stabilizes the contactor base on the mounting surface. When using DIN rails with a depth of 7.5 mm, the spacer has no function and can be removed.

The link modules are used for direct start load feeders. The motor starter protector and contactor assemblies can then be snapped directly onto the slots in the 3-phase busbars. The corresponding link modules (3RA19 21-1...., 3RA29 21-1...., 3RA29 11-2. or 3RA29 21-2....) should generally be used for size S00 and S0 feeders.

Terminal block (3RV2917-5D) ⑧

The 3RV2917-5D terminal block can be used to integrate additional 1-, 2-, and 3-phase components alongside the SIRIUS motor starter protector. With the aid of the terminal block, the 3 phases can be fed out of the system, thereby enabling even single-phase loads to be integrated into the system. As the terminal block plugs into the slot on the expansion plug, the outfeed can be positioned in the center or at the end of the infeed system. The terminal block can be rotated through 180° and interlocked with the infeed system's support modules. So that the 1-, 2-, and 3-phase components can be plugged into the infeed system, the 45 mm 3RV1917-7B DIN rail (which is screwed onto the support plate) is available.

The short-circuit protection device connected downstream from the 3RV2917-5D terminal block must be configured in accordance with the conductor cross-section on the terminal block according to the table below.

Table 11- 10 Conductor cross-section on the terminal block

Conductor cross-section on the terminal block		**Downstream short-circuit protection device (e.g. 5SY)**		
		$I_{d\ max}$		
1.5	mm^2	< 7.5	kA	Short-circuit-proof routing of the cables from the terminal block to the downstream short-circuit protection device (e.g. 5SY) must be ensured.
2.5	mm^2	< 9.5	kA	
4	mm^2	< 9.5	kA	
6	mm^2	< 12.5	kA	

11.13.2 Installation guidelines

When installing, the clearance in the Y direction from live, grounded or insulated parts in accordance with IEC 60947-4 is: 10 mm. The installation guidelines for motor starter protectors or fuseless load feeders must also be observed along with the associated clearances.

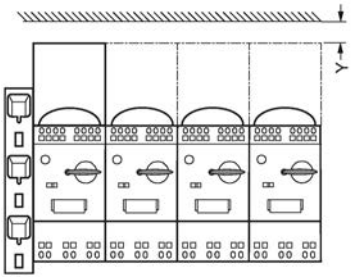

Figure 11-10 Installation guidelines

11.13.3 Derating

Derating for motor starter protectors and fuseless load feeders S00 / S0 in the 3RV infeed system (63 A)

Size	Rated current I_e [A]	Max. permissible rated operating current I_e [%]	Max. ambient temperature T [°C]
S00	≤ 14	100	60
	> 14 ... 16	87	60
	> 14 ... 16	100	40
S0	≤ 16	100	60
	> 16 ... 25	87	60
	> 16 ... 25	100	40
	> 25 ... 32	87	40
	> 32	Not permissible	

11.13.4 Mounting

Mounting the 3RV2917 infeed system

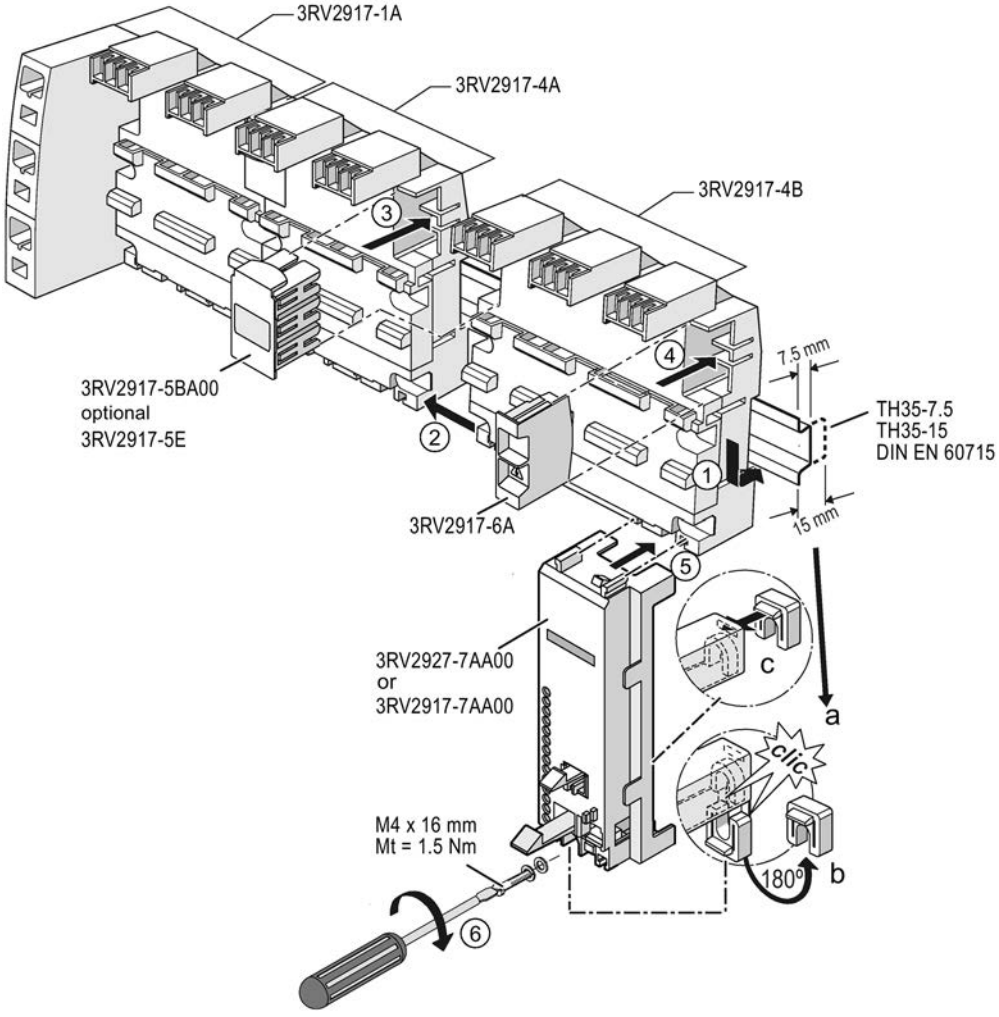

① Snap the busbar onto the DIN rail.

② Slide the individual busbars together.

③ Connect the individual busbars with the expansion plug to establish an electrical connection between the busbars.

④ Fit the end cover to cover the terminal connections at the end of the busbars.

⑤ You need the contactor base to mount load feeders. Connect this to the underside of the busbar, as illustrated in the diagram.

If you are using DIN rails with a depth of 15 mm, spacers are attached to the contactor base (a). Remove the spacer (b) and attach it to the designated opening (c).

⑥ Screw the contactor base tight with M4 screws, tightening torque 1.5 Nm.

Mounting position rotated by 90°

The 3RV2917 infeed system can also be mounted rotated by 90°. The graphic below shows the vertical installation.

Note

When the infeed system is installed vertically, a maximum of eight 3RV2.1 / 3RV2.2 motor starter protectors without a 3RT2 contactor can be fitted.

If more than eight 3RV2.1 / 3RV2.2 motor starter protectors without a 3RT2 contactor are mounted, please contact Technical Support (https://support.industry.siemens.com/My/ww/en/requests).

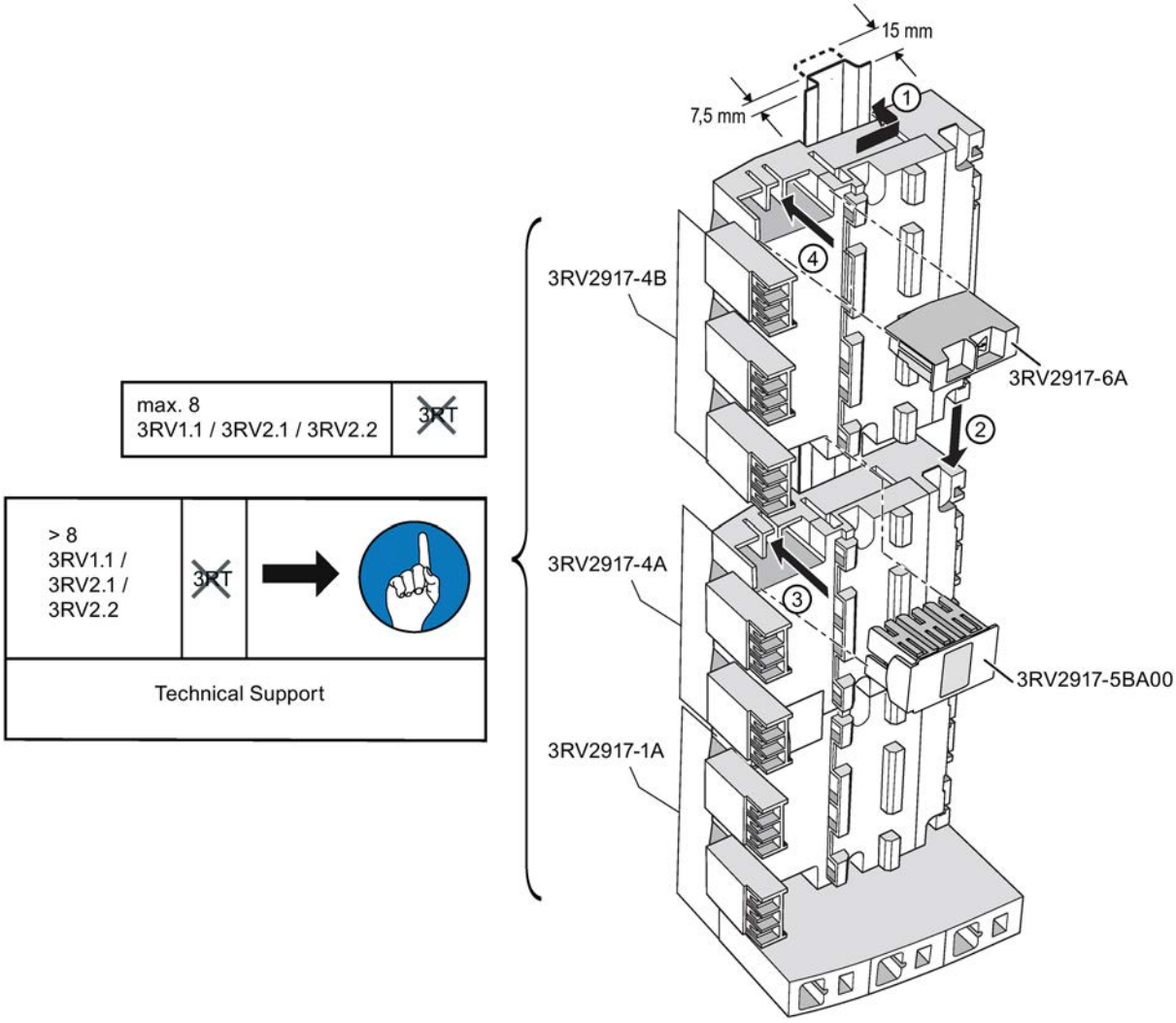

① Snap the busbar onto the DIN rail.
② Slide the individual busbars together.
③ Connect the individual busbars with the expansion plug to establish an electrical connection between the busbars.
④ Fit the end cover to cover the terminal connections at the end of the busbars.

Mounting the 3RV2 motor starter protector to the 3RV2917 infeed system

The diagram below shows an example of attaching the 3RV2 motor starter protector with spring-loaded terminals, size S0, to the 3RV2917 infeed system.

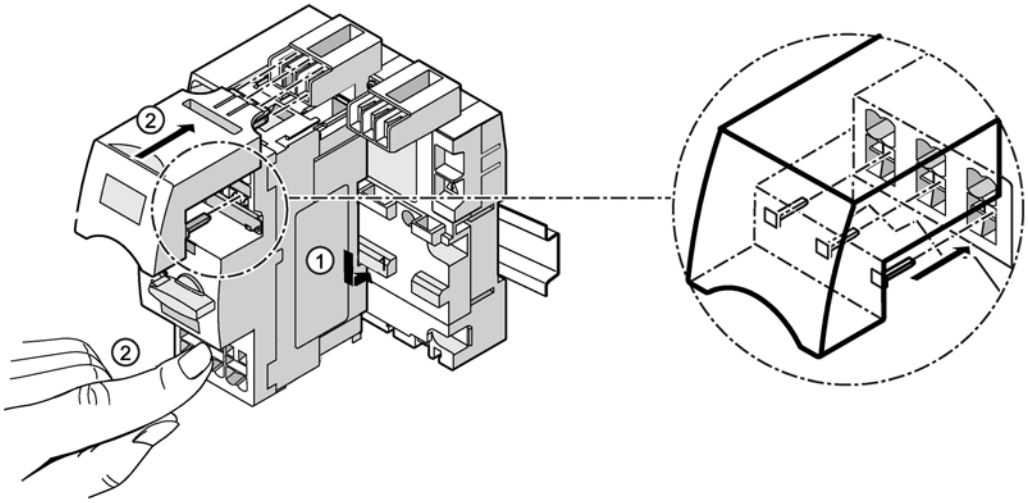

① Snap the motor starter protector onto the infeed system.

② Establish the electrical connection between the infeed system and the motor starter protector by inserting the connector into the corresponding socket contacts as shown in the zoom view. Keep hold of the device as you do this.

Mounting the 3RV27 / 3RV28 Circuit Breakers to the 3RV2917 infeed system

Table 11- 11 Derating table UL / CSA

	Rated current I_n [A]	**Max. permissible rated current I_n [%]**
3RV2711 / 3RV2721 3RV2811 / 3RV2821	0.16 ... 22	80
UL / CSA: Surrounding Air Temperature 40 °C		
IEC: Ambient Temperature 40 °C		

The following illustrations show the mounting of the 3RV27 / 3RV28 Circuit Breakers to the 3RV2917 infeed system.

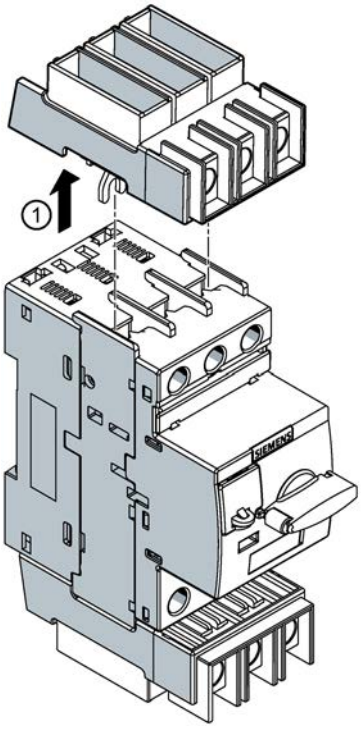

① Remove the upper terminal block from the motor starter protector.

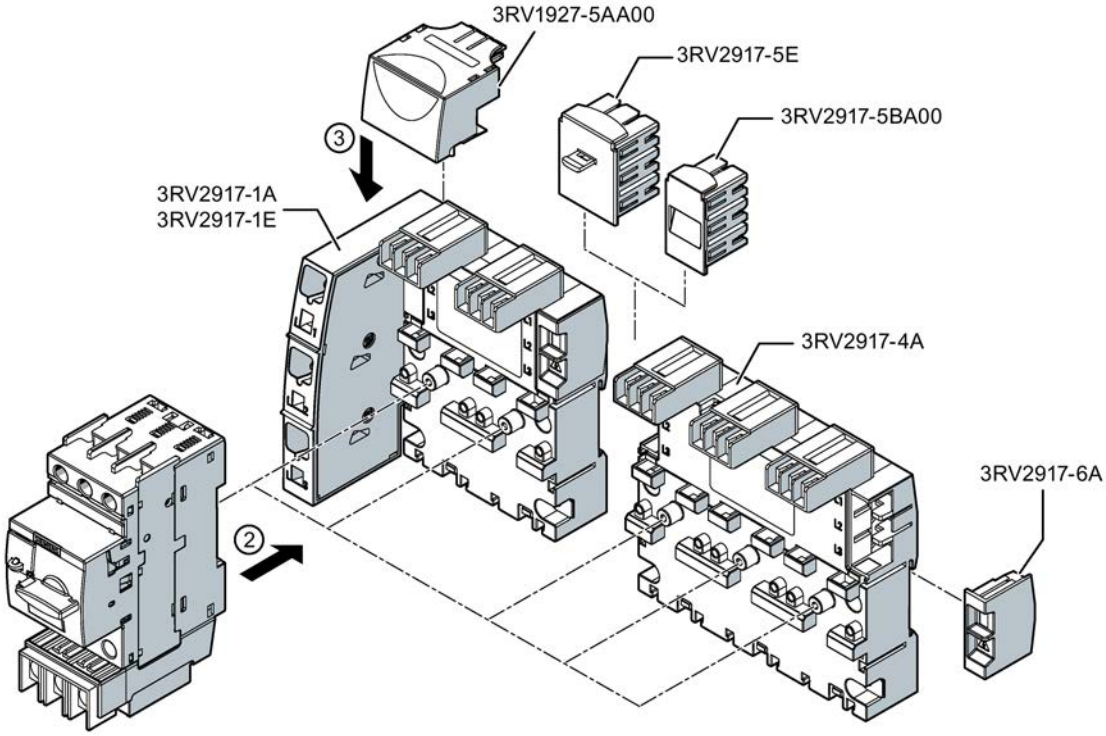

② Snap the motor starter protector onto the infeed system.

③ Establish the electrical connection between the infeed system and the motor starter protector by inserting the connector into the corresponding socket contacts. Keep hold of the device as you do this.

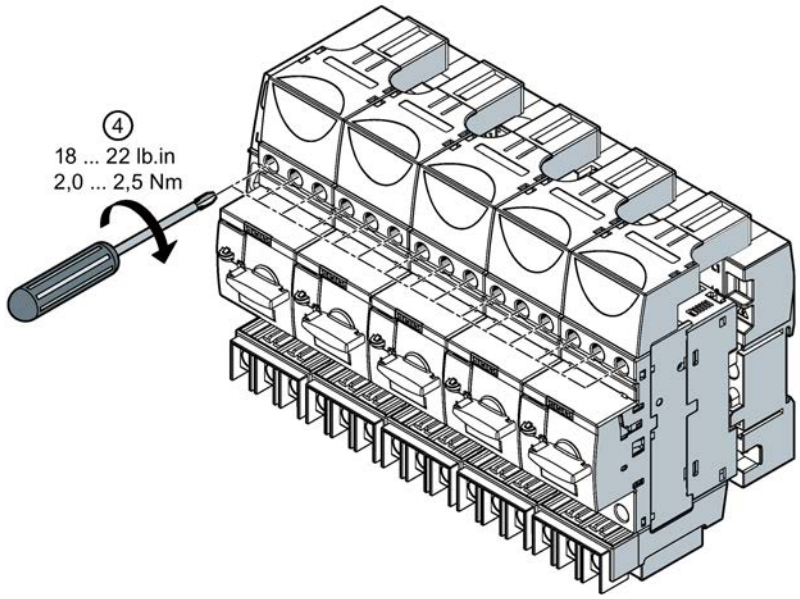

④ Screw the connector tight by screwing the main conductor terminals of the motor starter protector tight.

Tightening torque: 2.0 ... 2.5 Nm (18 ... 22 lb.in)

11.14 Link module for attaching a contactor

11.14.1 Description

Link module for motor starter protector - contactor

Link modules to establish the electrical and mechanical connections between motor starter protector and contactor/solid-state contactor or soft starter are required if you wish to use load feeders.

Function of link modules

The link modules have the following functions:

- Electrical connection between motor starter protector and contactor/solid-state contactor or soft starter
- Mechanical connection between motor starter protector and contactor/solid-state contactor or soft starter

Depending on the connection system of the individual devices there are three different types of link module for load feeders:

- Link modules with screw-type connection system

  The motor starter protector and the contactor/contactors have a screw connection.
- Link modules for individual devices with spring-loaded connection (sizes S00/S0 only)

  The motor starter protector and the contactor/contactors have a spring-loaded connection.
- Link modules for hybrid connection (sizes S00/S0 only)

  The motor starter protector has a screw connection and the contactor/contactors have a spring-loaded connection.

11.14.2 Mounting

Reference

More information ...	Can be found in the appendix ...
About mounting link modules	"List of references" under "Manuals - SIRIUS Modular System (Page 280)" in the "SIRIUS - SIRIUS 3RA load feeders" manual.

11.15 Terminal cover for cable lug connection and busbar connection

11.15.1 Description

Terminal cover for cable lug connection and busbar connection

For the motor starter protectors (size S3), there is a terminal cover for cable lug connection and busbar connection.
For connection of conductors with ring cable lugs or connecting bars, the box terminal blocks of the size S3 devices can be detached. The terminal cover is available as touch protection and to ensure the necessary clearances and creepage distances when box terminal blocks have been removed.

11.15.2 Mounting

Mounting the terminal cover for cable lug connection and busbar connection

The diagram below shows an example of mounting the terminal cover for cable lug connection and busbar connection.

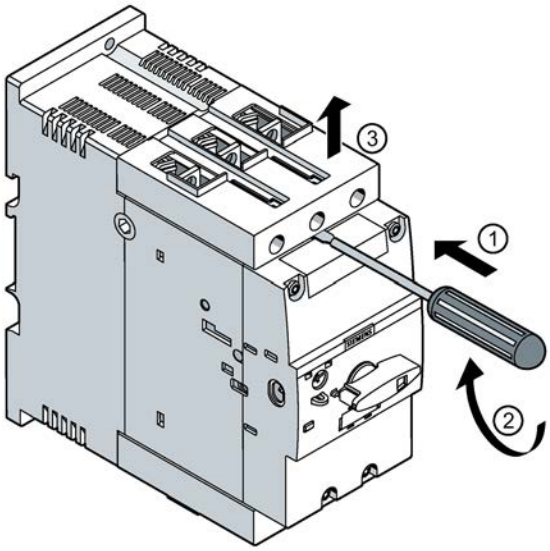

① Position the screwdriver on the terminal support, as shown in the figure, in the middle between the motor starter protector and the removable box terminal block.

② Carefully lever the detachable box terminal block from the motor starter protector.

③ Detach the removable box terminal block from the motor starter protector in the upward direction.

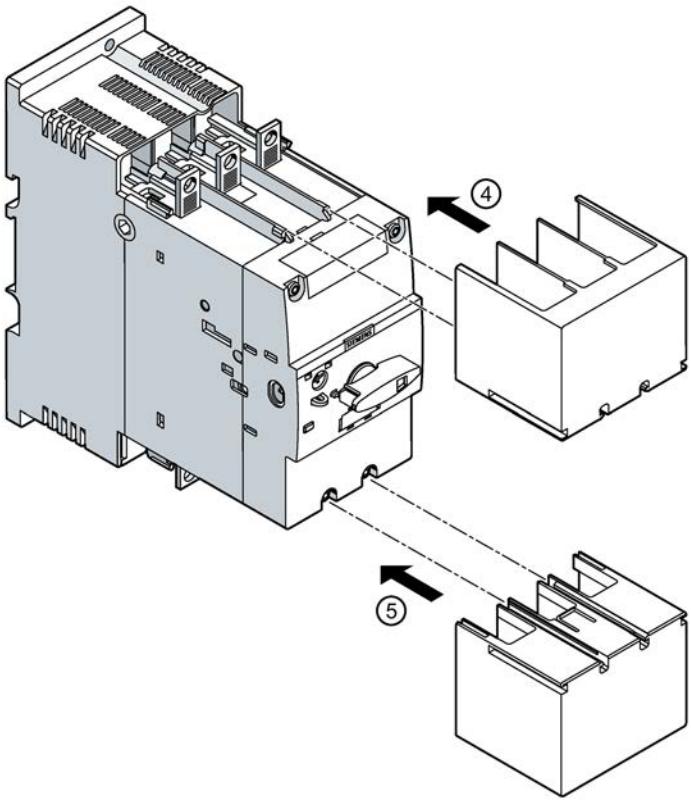

④ Slide the terminal cover for cable lug connection and busbar connection into the guide tabs on
⑤ the motor starter protector.

11.16 Terminal covers for box terminal block

11.16.1 Description

Terminal covers for box terminal block

Terminal covers for box terminal blocks are available for the motor starter protectors (sizes S2 and S3).

11.16.2 Mounting

Mounting the terminal cover for the box terminal block

The diagram below shows an example of mounting the terminal cover for the box terminal block.

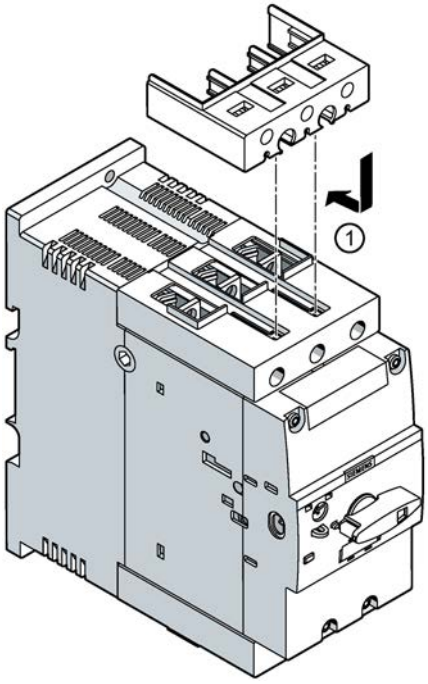

① Slide the terminal cover for the box terminal block into the openings provided on the box terminal block of the motor starter protector.

11.17 Terminal cover for circuit breaker and the terminal block UL 60947-4-1 (UL 508) "Type E"

11.17.1 Description

Terminal cover for Circuit Breaker 3RV2742 and the terminal block UL 60947-4-1 (UL 508) "Type E" 3RT2946-4GA07 (size S3)

The terminal cover 3RV2948-1LA00 for the box terminal blocks is available for the Circuit Breaker 3RV2742 with size S3 and the terminal block UL 60947-4-1 (UL 508) "Type E" 3RT2946-4GA07.

11.17.2 Mounting

Installation of the terminal cover 3RV2948-1LA00 for Circuit Breaker 3RV2742 and the terminal block UL 60947-4-1 (UL 508) "Type E" 3RT2946-4GA07 (size S3)

The following diagrams show the attachment of the terminal cover 3RV2948-1LA00.

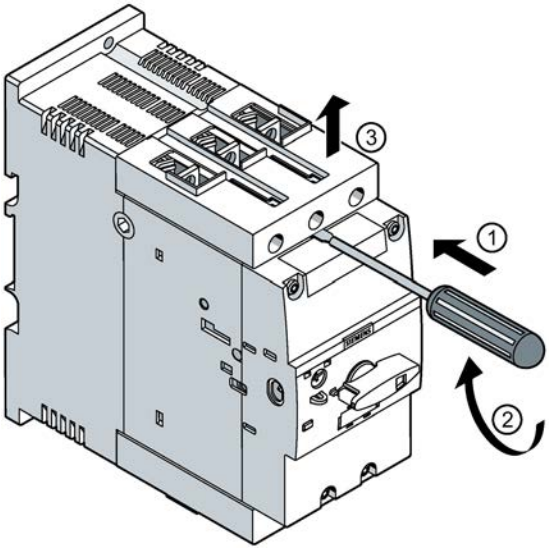

① Position the screwdriver on the terminal support, as shown in the figure, in the middle between the circuit breaker and the removable box terminal block.

② Carefully lever the detachable box terminal block from the circuit breaker.

③ Detach the removable box terminal block from the circuit breaker in the upward direction.

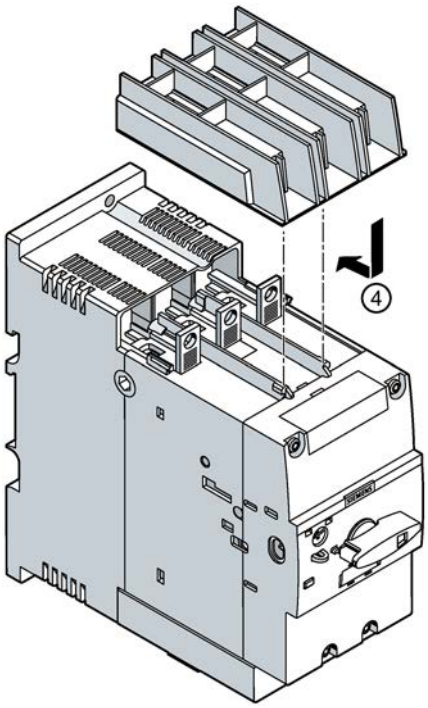

④ Slide the terminal block 3RT2946-4GA07 into the guide tabs provided on the circuit breaker.

Note

No transverse auxiliary switches can be fitted when using 3RT2946-4GA07 terminal blocks.

As an option, the terminal cover 3RV2948-1LA00 can be fixed to the terminal block 3RT2946-4GA07.

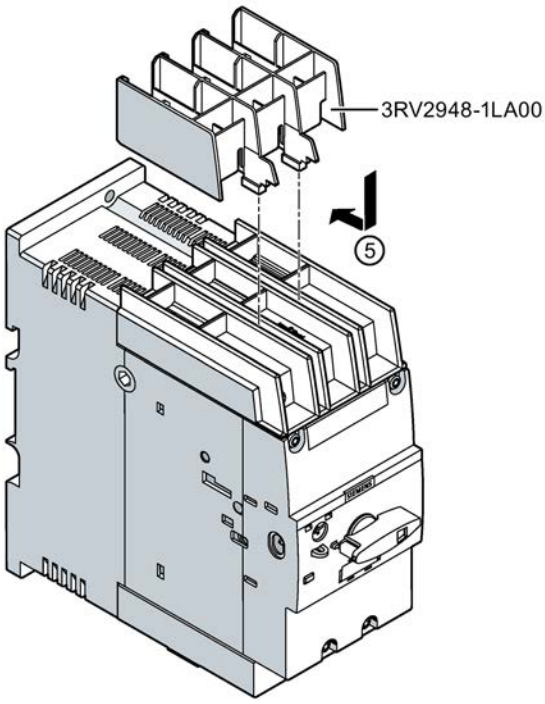

⑤ Slide the terminal cover 3RV2948-1LA00 into the openings provided on the terminal block.

Technical data

12

12.1 Technical specifications in the Siemens SiePortal

Technical data sheet

You can find the technical specifications for the product in Siemens SiePortal.

1. Enter the article number of the desired device in the "Products" field.
2. Click the "Technical specifications" link in the result.

See also

SIOS technical data - 3RV (https://support.industry.siemens.com/cs/ww/en/ps/16244/td)

Conductor cross-sections for the 3RV27 and 3RV28 devices

S00/S0 CB 3RV2711/21 and 3RV2811/21					
		Top	Bottom	Top	Bottom
IEC mm²	Solid	1 x (1 ... 10)	1 x (1 ... 10)	1 x (1 ... 10)	1 x (1 ... 10)
	Stranded	1 x (10 ... 25)	1 x (10 ... 25)	1 x (10)	1 x (10 ... 25)
	Finely stranded without end sleeve	-	-	-	
	Finely stranded with end sleeve	1 x (1 ... 16)	1 x (1 ... 16)	1 x (1 ... 6)	1 x (1 ... 16)
UL AWG/kcmil	Solid	1 x (14 ... 10)	1 x (14 ... 10)	1 x (14 ... 10)	1 x (14 ... 10)
	Stranded	1 x (14 ... 10)	1 x (14 ... 10)	1 x (14 ... 10)	1 x (14 ... 10)
	Mixed solid/stranded	-	-	Mixing is allowed	

S3 CB 3RV2742					
		Top	Bottom	Top	Bottom
IEC mm²	Solid	1 x (2.5 ... 16)	1 x (2.5 ... 16)	1 x (2.5 ... 16)	1 x (2.5 ... 16)
	Stranded	1 x (10 ... 70)	1 x (10 ... 70)	1 x (6 ... 16) 1 x (10 ... 50)	1 x (6 ... 16) 1 x (10 ... 50)
	Finely stranded without end sleeve	1 x (10 ... 50)	1 x (10 ... 50)	1 x (10 ... 35)	1 x (10 ... 35)
	Finely stranded with end sleeve	1 x (2.5 ... 50)	1 x (2.5 ... 50)	1 x (2.5 ... 35)	1 x (2.5 ... 35)
	Ribbon cables: Number x (width x thickness)	6 x (9 x 0.8)	6 x (9 x 0.8)	6 x (9 x 0.8)	6 x (9 x 0.8)
UL AWG/kcmil	Solid	1 x (14 ... 10)	1 x (12 ... 10)	1 x (12 ... 10)	1 x (12 ... 10)
	Stranded	1 x (10 ... 4)	1 x (8 ... 4)	1 x (10 ... 4)	1 x (8 ... 4)
	Mixed solid/stranded	-	-	Mixing is allowed	

Circuit diagrams 13

13.1 CAx data in the Siemens SiePortal

You can find CAx data for the product in the SiePortal.

1. Enter the article number of the desired device in the "Products" field.
2. Click the "CAx data" link in the result.

See also

SIOS technical data - 3RV (https://support.industry.siemens.com/cs/ww/en/ps/16244/td)

13.2 Internal circuit diagrams for 3RV1 motor starter protectors / circuit breakers

3RV1 motor starter protector / circuit breaker UL 489

3RV10.1-...0

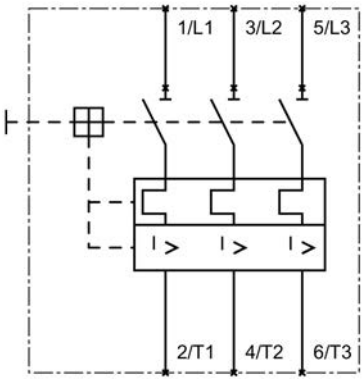

Motor starter protectors for motor protection/transformer protection/system protection

3RV1611-0BD10
3RV1611-1.G14

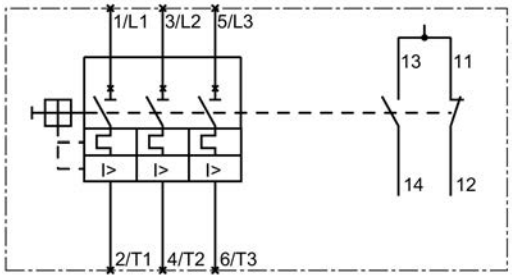

Circuit breakers for fuse monitoring / voltage transformer circuit breakers for distance protection

13.3 Internal circuit diagrams for 3RV2 motor starter protectors

3RV2 motor starter protectors/circuit breakers

3RV20.1-...0, 3RV24.1-...0, 3RV27.1-...0, 3RV28.1-...0, 3RV20.2-...0

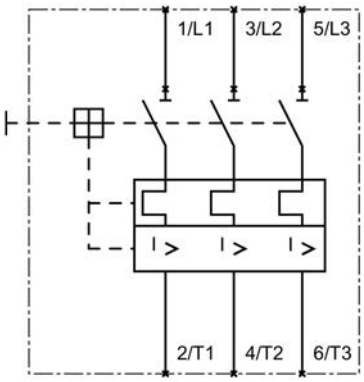

Motor starter protectors for motor protection/transformer protection/system protection

3RV23.1-...0, 3RV23.2-...0

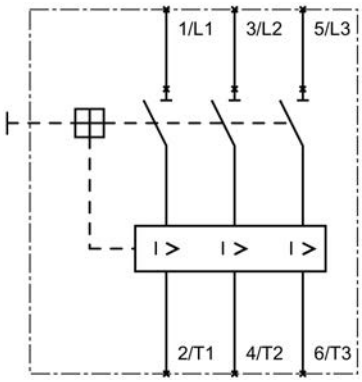

Motor starter protector for starter protection

3RV20.1-...5, 3RV24.1-...5, 3RV20.2-...5

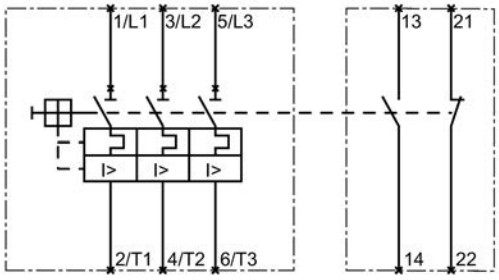

Motor starter protectors for motor protection/transformer protection with transverse auxiliary switch

3RV21.1-...0

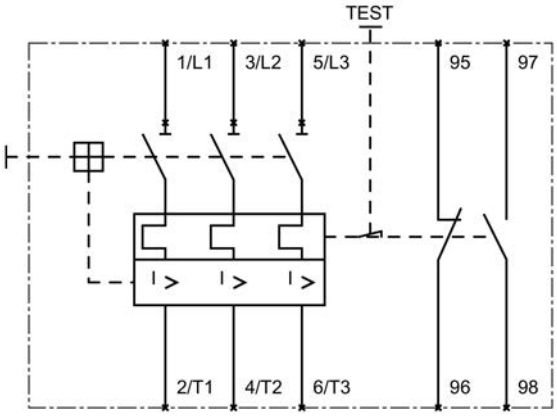

Motor starter protectors for motor protection with overload relay function

13.4 Internal circuit diagrams for auxiliary switches

3RV29 auxiliary switches

Lateral auxiliary switches

3RV2901-.A

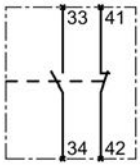

1 NO contact, 1 NC contact

3RV2901-.B

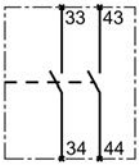

2 NO contacts

3RV2901-.C

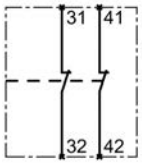

2 NC contacts

Transverse auxiliary switches

3RV2901-1D

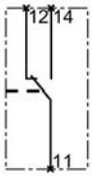

1 CO contact

3RV2901-.E

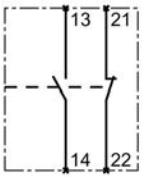

1 NO contact, 1 NC contact

3RV2901-.F

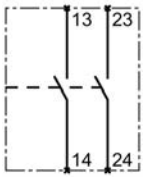

2 NO contacts

3RV2901-.J

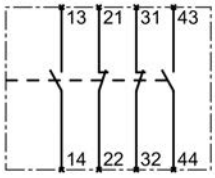

2 NO contacts, 2 NC contacts

13.5 Internal circuit diagrams for motor starter protector accessories

Auxiliary releases and signaling switches

Auxiliary release

3RV2902-.A..

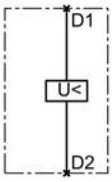

Undervoltage release

3RV2922-.C..

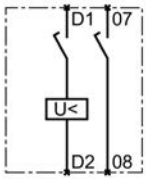

Undervoltage release with leading auxiliary contacts, 2 NO

3RV2902-.D..

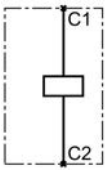

Shunt release

Signaling switch

3RV2921-.M

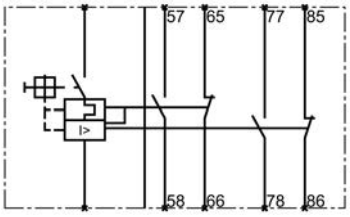

Signaling switch

Types of coordination

A

A.1 Types of coordination

Types of coordination

Standard DIN EN 60947-4-1 (VDE 0660 Part 102) or IEC 60947-4-1 distinguishes between two types of coordination (type of coordination), which are referred to as coordination type "1" and coordination type "2". In the case of both types of coordination, the short-circuit is reliably mastered. the only differences are in the extent of the damage sustained by the device following a short circuit.

Type of coordination 1

The load feeder may be non-operational after a short circuit has been cleared. Damage to the contactor and the overload release is also permissible.

Type of coordination 2

After short-circuit disconnection, there must be no damage to the overload release or to any other part. The load feeder can resume operation without needing to be renewed. Welding of the contactor contacts only is permitted if these can be separated easily without significant deformation.

References

B

B.1 References

Further references

In addition to this manual, please refer to the operating instructions and manuals for any accessories. You can download the relevant documentation from the Internet (http://www.siemens.com/sirius/manuals). Simply enter the Article number of the relevant item into the search field.

Operating instructions

Title	Article number
SIRIUS motor starter protectors/circuit breakers S00 (3RV1.1)	3ZX1012-0RV01-1AA1
SIRIUS circuit breakers for fuse monitoring S00 (3RV1611-0BD10)	3ZX1012-0RV01-2AS1
SIRIUS voltage transformer circuit breakers S00 (3RV1611-1.G14)	3ZX1012-0RV01-3AS1
SIRIUS motor starter protectors S00 / S0 (3RV2.1 and 3RV2.2)	3ZX1012-0RV21-1AA1
SIRIUS motor starter protector S2 (3RV2.3.)	3ZX1012-0RV23-0AA0
SIRIUS motor starter protectors S3 (3RV2.4.)	3ZX1012-0RV24-0AA0
SIRIUS circuit breakers UL 489 S00 / S0 (3RV27. and 3RV28.)	3ZX1012-0RV27-4AU1
SIRIUS circuit breakers UL 489 S3 (3RV2742)	3ZX1012-0RV27-5AU1
SIRIUS disconnector module (3RV2928-1A and 3RV2938-1A)	3ZX1012-0RV20-8AA1
SIRIUS door coupling rotary operating mechanism (3RV19.6-2. and 3RV29.6-2.)	3ZX1012-0RV10-6AA1
SIRIUS molded-plastic enclosure/aluminum cast enclosure (3RV1923 and 3RV1933)	3ZX1012-0RV10-2AA1
SIRIUS signaling switch for 3RV2 circuit breaker (3RV2921-1M, 3RV2921-2M)	3ZX1012-0RV20-8MA1

B.2 Manuals - SIRIUS Modular System

Manuals - SIRIUS Modular System

You can download the SIRIUS manuals from the Internet.

Information about ...	Is available in ...
• Contactors and contactor assemblies 3RT, 3RH and 3RA	• "SIRIUS 3RT contactors/contactor assemblies" (https://support.industry.siemens.com/cs/ww/en/view/60306557) Equipment Manual
• 3RF34 electronic switching devices	• "SIRIUS - SIRIUS 3RF34 electronic Switching Devices" (https://support.industry.siemens.com/cs/ww/en/view/60298187) manual
• 3RW soft starters	• "SIRIUS 3RW30/3RW40 Soft Starter" (https://support.industry.siemens.com/cs/ww/en/view/38752095) manual • "SIRIUS 3RW44 Soft Starter" (https://support.industry.siemens.com/cs/ww/en/view/21772518) manual
• 3RV motor starter protectors	• "SIRIUS 3RV Motor Starter Protectors" (https://support.industry.siemens.com/cs/ww/en/view/60279172) manual
• 3RU, 3RB overload relays	• "SIRIUS 3RU Thermal Overload Relays / SIRIUS 3RB Electronic Overload Relays" (https://support.industry.siemens.com/cs/ww/en/view/60298164) manual
• 3UG4 monitoring relays / 3RR2 current monitoring relays	• "3UG4/3RR2 Monitoring Relay" (https://support.industry.siemens.com/cs/ww/en/view/54397927) manual
• SIMOCODE pro 3UF7 Motor Management and Control Devices	• Manual "Manual Collection - SIMOCODE pro 3UF7" (https://support.industry.siemens.com/cs/ww/en/view/109803120)
• SIMOCODE M-CP motor management system	• Manual "SIMOCODE M-CP Motor Management System" (https://support.industry.siemens.com/cs/ww/en/view/109973290)
• 3UG48 monitoring relays / 3RR24 current monitoring relays for IO-Link	• "3UG48/3RR24 Monitoring Relays for IO-Link" (https://support.industry.siemens.com/cs/ww/en/view/54375430) manual
• 3UG5 monitoring relay	• Manual "SIRIUS Monitoring Relay 3UG5"
• 3RA load feeders	• "SIRIUS - SIRIUS 3RA Load Feeders" (https://support.industry.siemens.com/cs/ww/en/view/60284351) manual
• 3RA6 compact starters	• "SIRIUS 3RA6 Compact Starter" (https://support.industry.siemens.com/cs/ww/en/view/27865747) manual

Information about ...	Is available in ...
• 3RA28 function modules for mounting on contactors	• "SIRIUS - SIRIUS 3RA28 Function Modules for Mounting on 3RT2 Contactors" (https://support.industry.siemens.com/cs/ww/en/view/60279150) manual
• Digital Configuration Manual for configuring the load feeders	• Manual "Digital Engineering Manual" (https://support.industry.siemens.com/cs/ww/en/view/109993832)

See also

SIRIUS function modules for AS-Interface
(https://support.industry.siemens.com/cs/ww/en/view/39318922)

SIRIUS function modules for IO-Link
(https://support.industry.siemens.com/cs/ww/en/view/39319600)

3RB24 solid-state overload relay for IO-Link
(https://support.industry.siemens.com/cs/ww/en/view/46165627)

3RS1 / 3RS2 temperature monitoring relays
(https://support.industry.siemens.com/cs/ww/en/view/54999309)

3RS14 / 3RS15 temperature monitoring relays for IO-Link
(https://support.industry.siemens.com/cs/ww/en/view/54375463)

Dimension drawings (dimensions in mm)

C

C.1 CAx data in the Siemens SiePortal

You can find CAx data for the product in the SiePortal.

1. Enter the article number of the desired device in the "Products" field.
2. Click the "CAx data" link in the result.

See also

SIOS technical data - 3RV (https://support.industry.siemens.com/cs/ww/en/ps/16244/td)

Note

All dimensions are specified in mm.

C.2 Dimension drawings 3RV1 motor starter protectors

C.2.1 Dimension drawings 3RV1.1 motor starter protectors (size S00)

3RV1011 motor starter protectors with screw-type connection technology S00

3RV1011

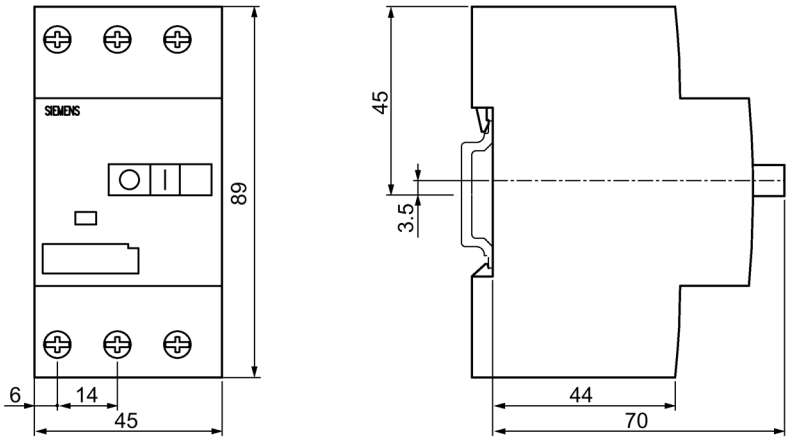

Figure C-1 Motor starter protector with screw-type connection system S00

3RV1611-0BD10 circuit breaker for fuse monitoring, screw-type connection technology S00

3RV1611-0BD10

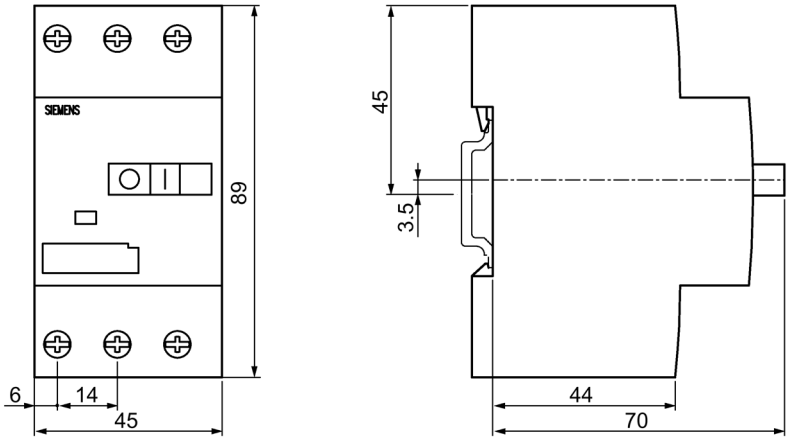

Figure C-2 3RV1611-0BD10 circuit breaker for fuse monitoring, screw-type connection technology S00

3RV1611-1.G14 voltage transformer circuit breakers for distance protection with screw-type connection technology, S00

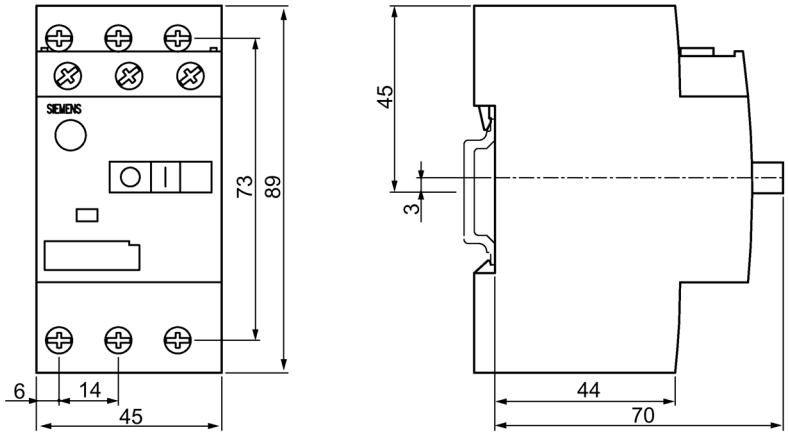

Figure C-3 3RV1611-1.G14 voltage transformer circuit breakers for distance protection with screw-type connection technology, S00

C.3 Dimension drawings for 3RV2 motor starter protectors

C.3.1 Dimension drawings for 3RV2 motor starter protectors (sizes S00 and S0)

Motor starter protectors with screw-type and spring-loaded connection systems, S00/S0

3RV2.1 and 3RV2.2

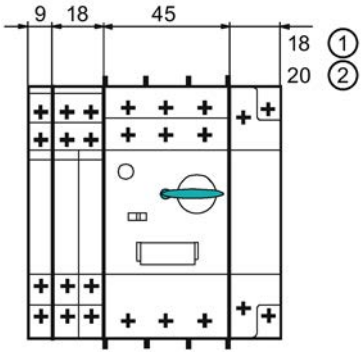

① 3RV2902, 3RV2922

② 3RV2111, 3RV2121

Figure C-4 Motor starter protectors with screw-type and spring-loaded connection systems, S00/S0

Motor starter protector with screw-type connection system

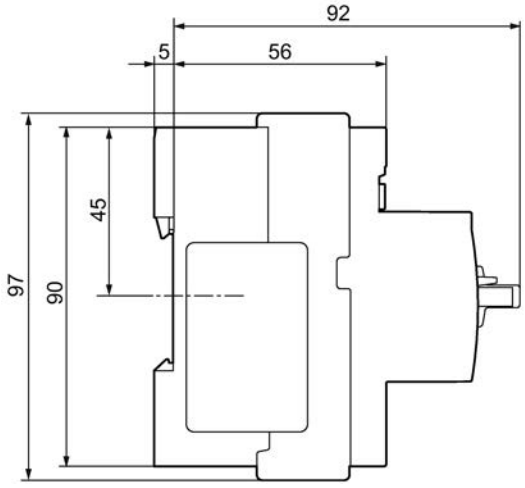

Figure C-5 Motor starter protector with screw-type connection system S00/S0

Motor starter protector with spring-loaded connection system

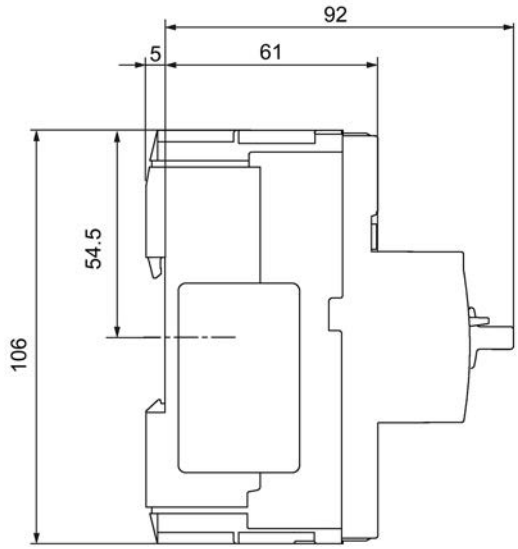

Figure C-6 Motor starter protector with spring-loaded connection system S00

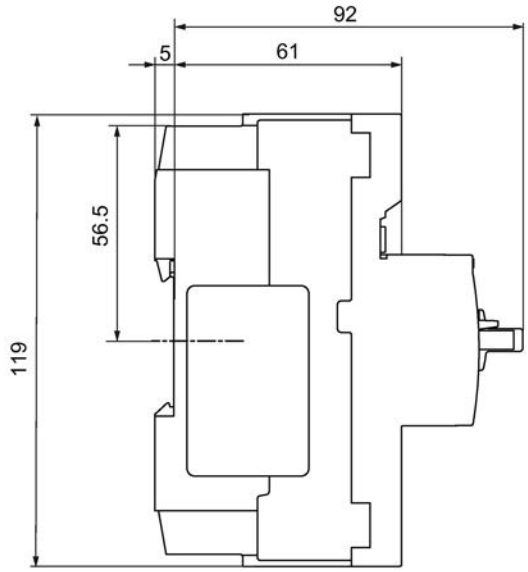

Figure C-7 Motor starter protector with spring-loaded connection system S0

Circuit breaker acc. to UL 489

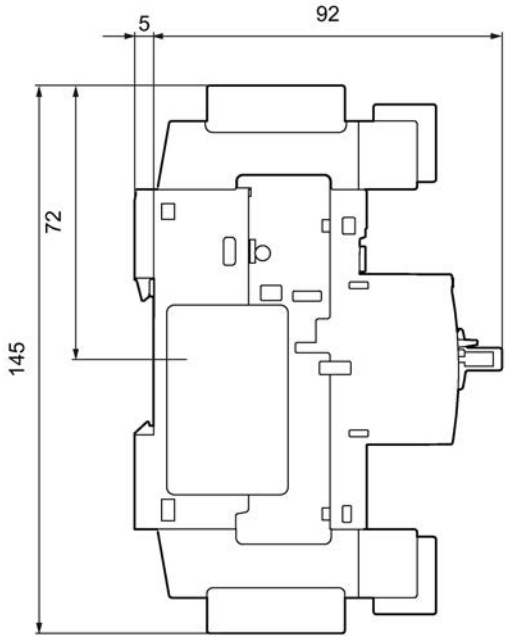

Figure C-8 Circuit breaker acc. to UL 489

Drilling plan

Figure C-9 Motor starter protectors S00 / S0 with lugs for screw fastening

C.3.2 Dimension drawings for 3RV2 motor starter protectors (size S2)

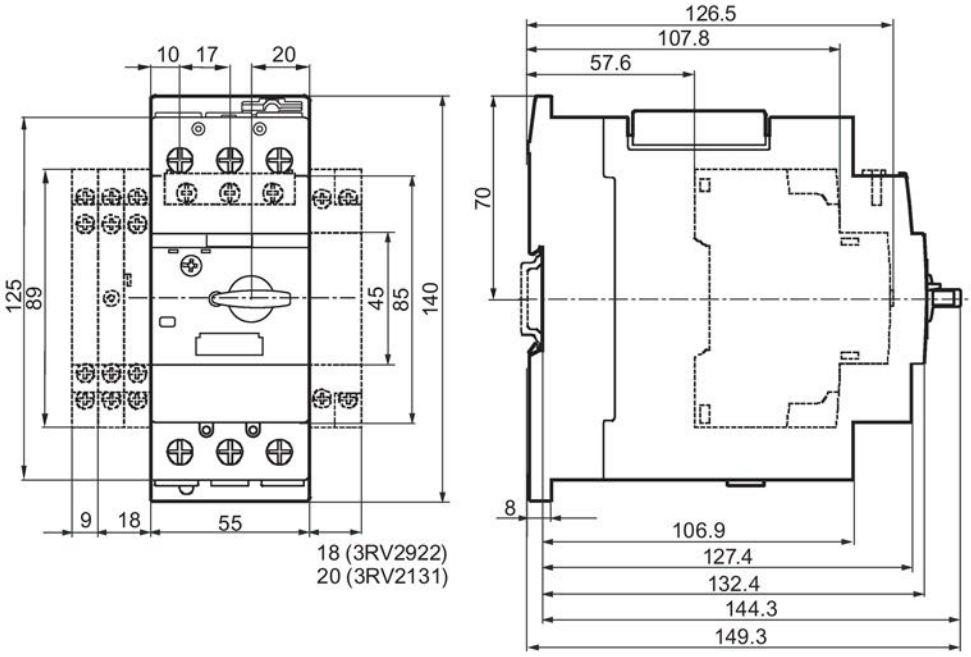

Figure C-10 3RV2.31 motor starter protector (≤ 45 A)

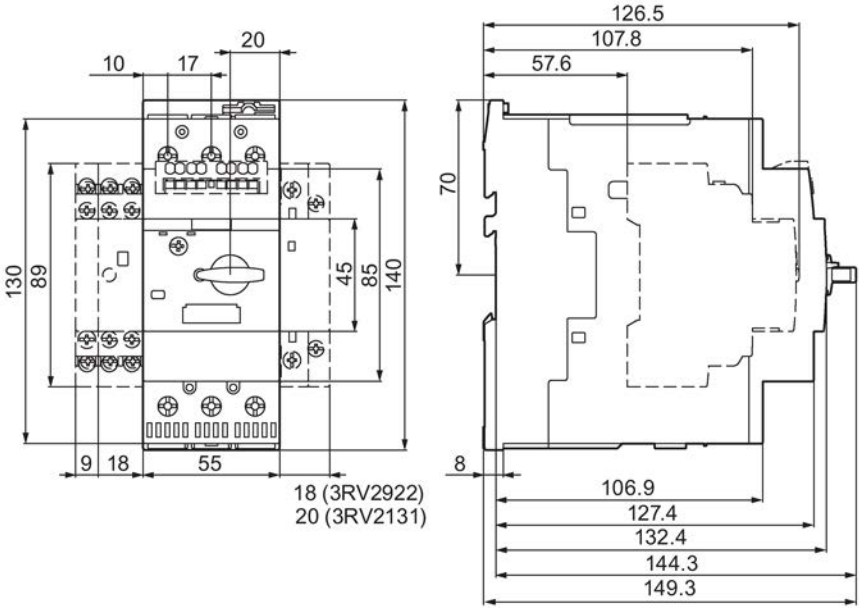

Figure C-11 3RV2.31(≥ 52 A) / 3RV2.32 / 3RV2431-4VA1 motor starter protectors.

Drilling plan

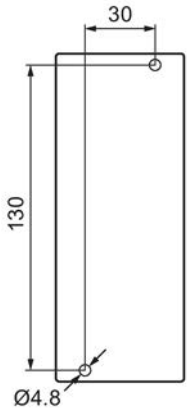

Figure C-12 3RV2.3 motor starter protector

C.3.3 Dimension drawings 3RV2 motor starter protectors / circuit breakers (size S3)

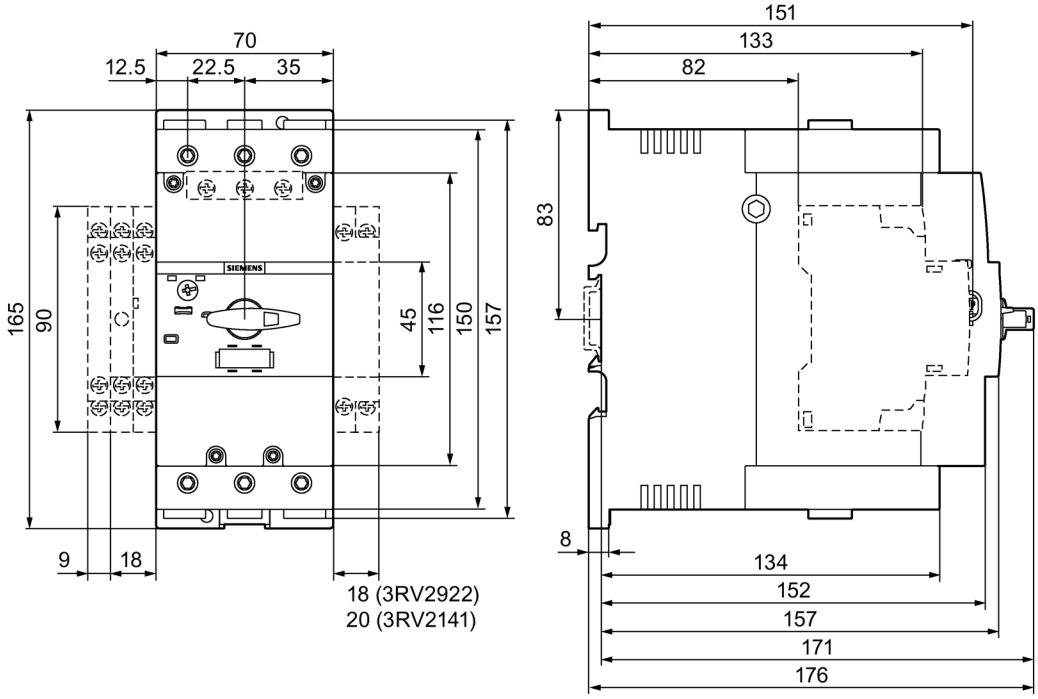

Figure C-13 3RV2.4 motor starter protectors

Circuit breaker acc. to UL 489

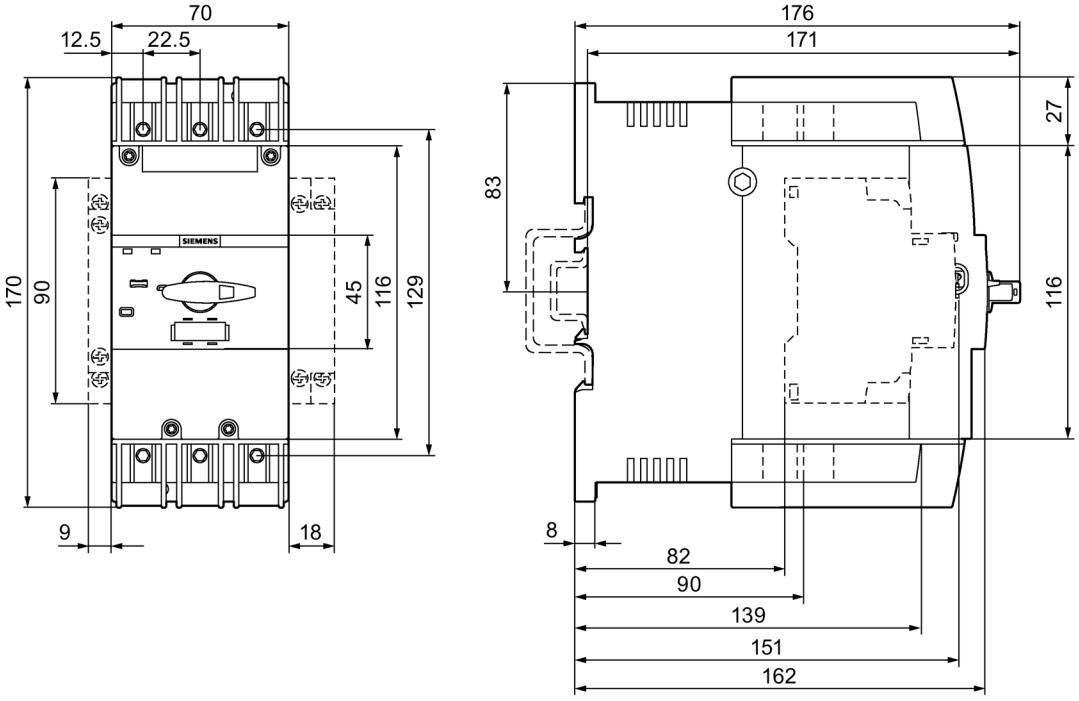

Figure C-14 Circuit breaker acc. to UL 489

Drilling plan

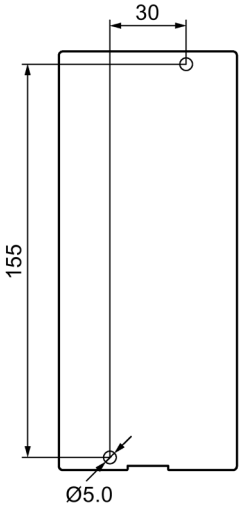

Figure C-15 3RV2.4 motor starter protectors

C.4 Dimension drawings for disconnector modules

3RV2928-1A disconnector module

For motor starter protectors sizes S00 and S0.

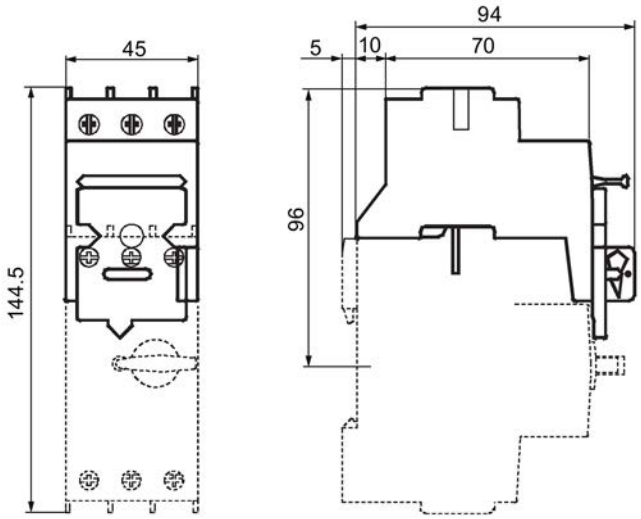

Figure C-16 3RV2928-1A

3RV2938-1A disconnector module

For motor starter protectors size S2.

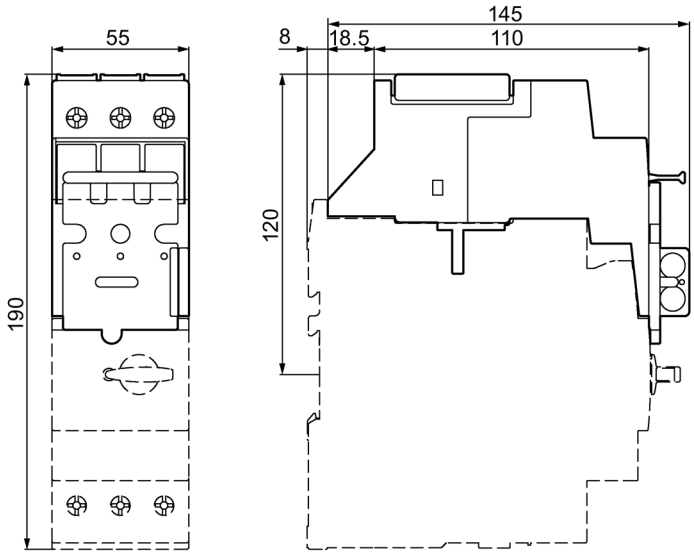

Figure C-17 3RV2938-1A

C.5 Dimension drawings for busbars

3RV1915-1.. 3-phase busbar system

For motor starter protectors sizes S00 and S0, modular spacing 45 mm
for 2 3RV1915-1AB motor starter protectors
for 3 3RV1915-1BB motor starter protectors
for 4 3RV1915-1CB motor starter protectors
for 5 3RV1915-1DB motor starter protectors

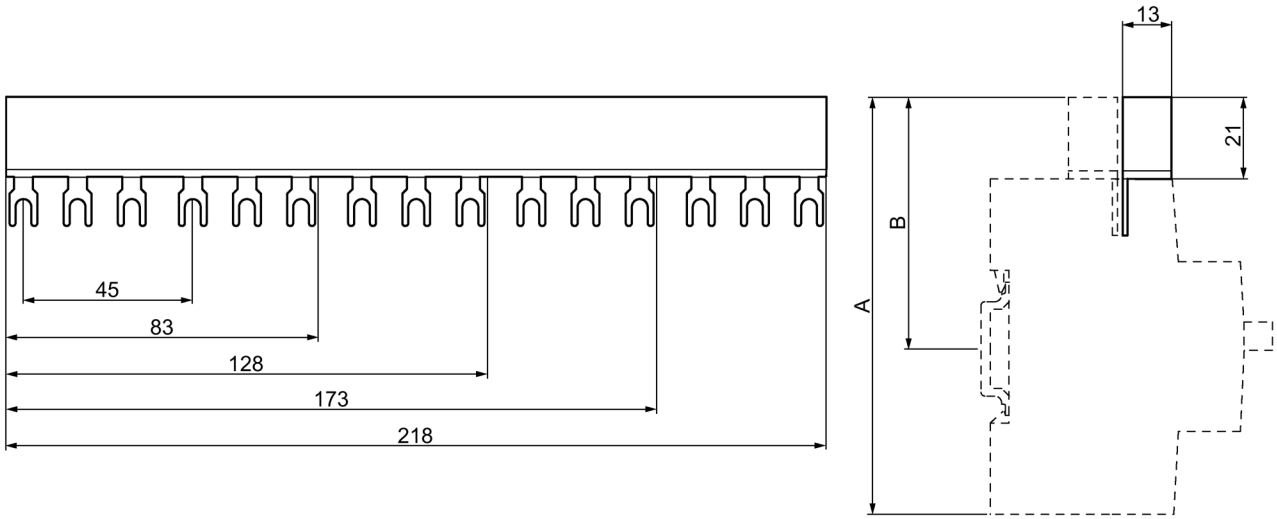

Size	A	B
S00/S0	119	70

Figure C-18 3RV1915-1..

3RV1915-2.. 3-phase busbar system

For motor starter protectors sizes S00 and S0, modular spacing 55 mm
for 2 3RV1915-2AB motor starter protectors with accessories
for 3 3RV1915-2BB motor starter protectors with accessories
for 4 3RV1915-2CB motor starter protectors with accessories
for 5 3RV1915-2DB motor starter protectors with accessories

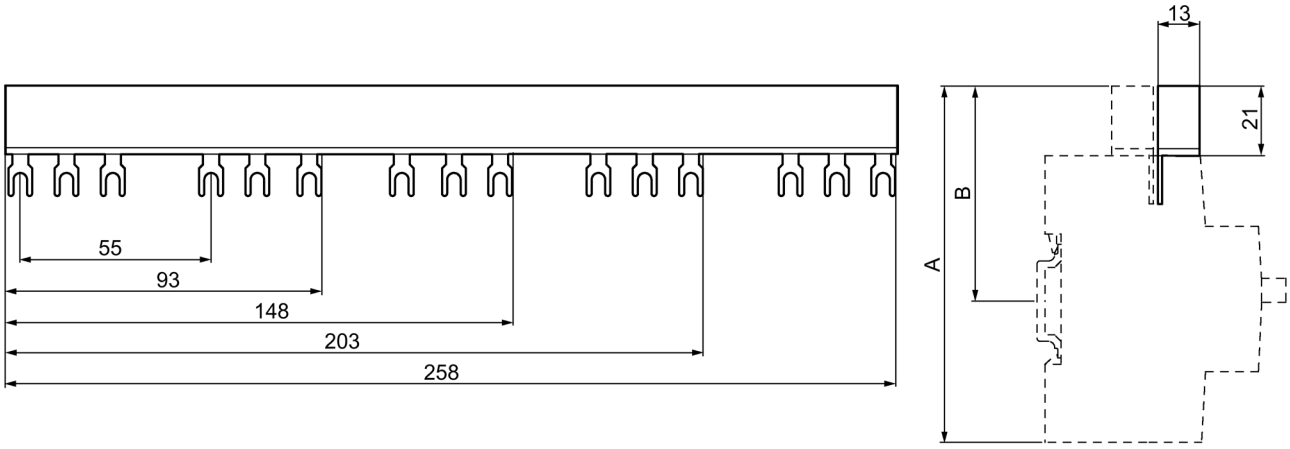

Size	A	B
S00/S0	119	70

Figure C-19 3RV1915-2..

3RV1915-3.. 3-phase busbar system

For motor starter protectors sizes S00 and S0, modular spacing 63 mm
for 2 3RV1915-3AB motor starter protectors with accessories
for 4 3RV1915-3CB motor starter protectors with accessories

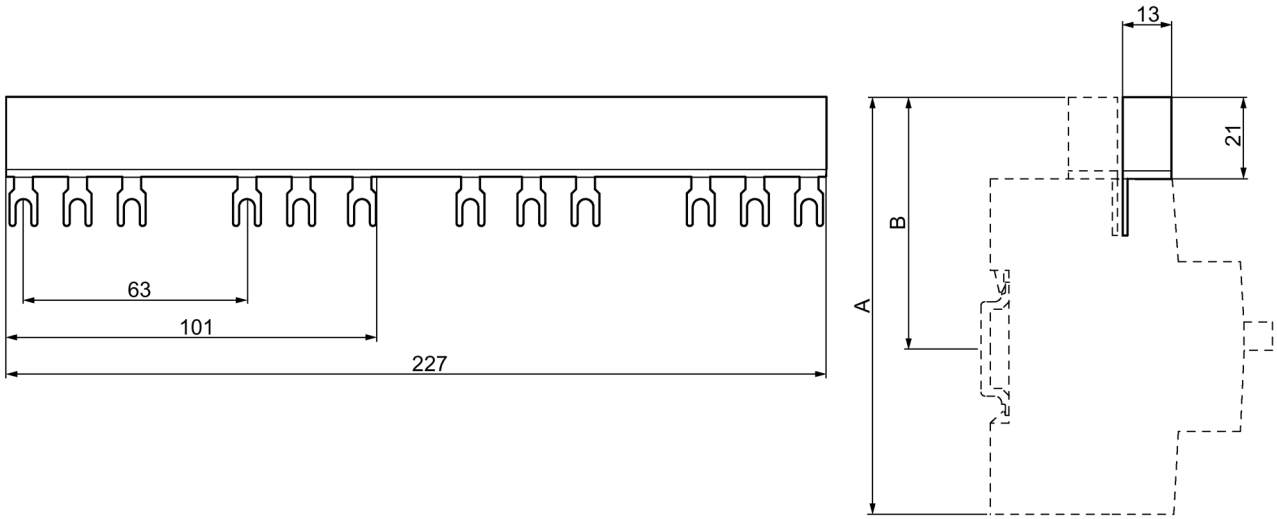

Size	A	B
S00/S0	119	70

Figure C-20 3RV1915-3..

3RV1935-1 3-phase busbar system

for motor starter protectors in size S2, modular spacing 55 mm
for 2 3RV1935-1A motor starter protectors
for 3 3RV1935-1B motor starter protectors
for 4 3RV1935-1C motor starter protectors

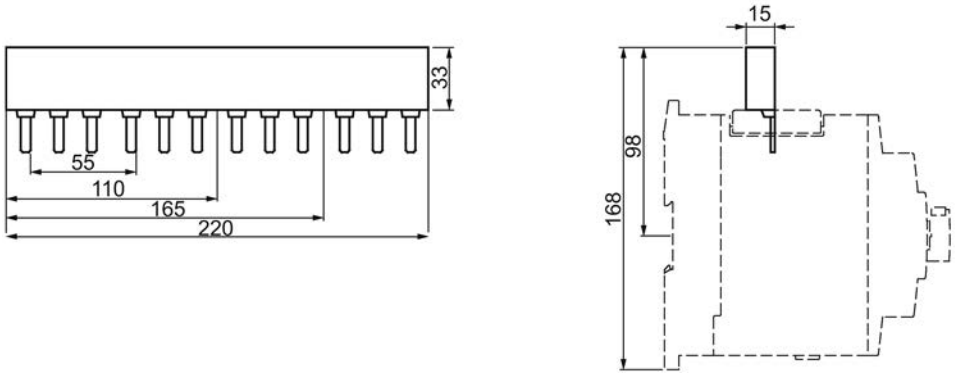

Figure C-21 3RV1935-1.

3RV1935-3 3-phase busbar system

For motor starter protectors in size S2, modular spacing 75 mm
for 2 3RV1935-3A motor starter protectors with accessories
for 4 3RV1935-3C motor starter protectors with accessories

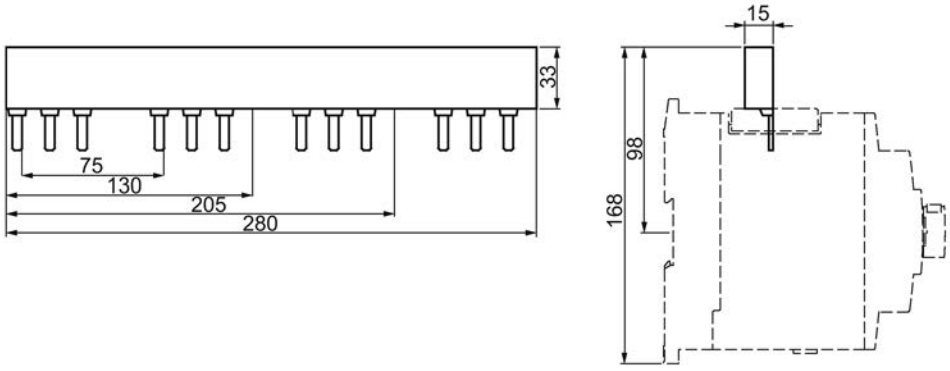

Figure C-22 3RV1935-3.

3RV29.5 3-phase infeed terminals

3RV2925-5AB

Connection from above,
for motor starter protectors sizes S00 and S0

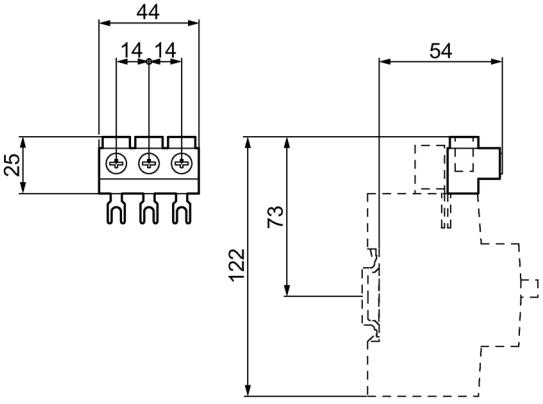

Figure C-23 3RV2925-5AB

3RV2925-5EB

For installing "type E starters"
Connection from above,
for motor starter protectors sizes S00 and S0

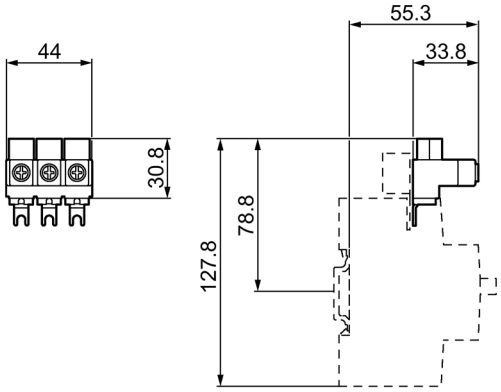

Figure C-24 3RV2925-5EB

3RV2915-5B

Connection from below,
for motor starter protectors sizes S00 and S0

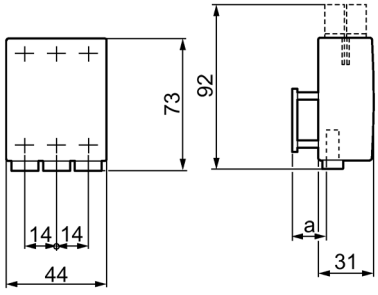

Type	a
3RV2.1 / 3RV2.2	23

Figure C-25 3RV2915-5B

3RV2935-5A

Connection from above,
for motor starter protectors size S2

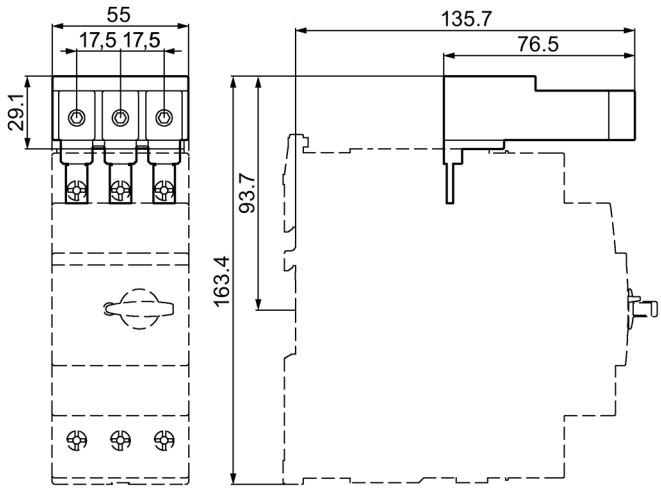

Figure C-26 3RV2935-5A

3RV2935-5E

For installing "type E starters"
Connection from above,
for motor starter protectors size S2

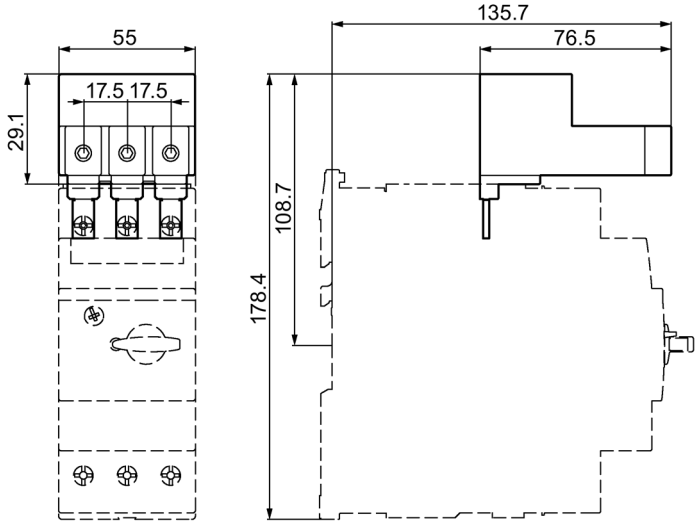

Figure C-27 3RV2935-5E

C.6 Dimension drawings for 3RV2926-0 door-coupling rotary operating mechanisms

3RV2926-0B, 3RV2926-0C

Short shaft[3)], for motor starter protectors sizes S00, S0 and S2

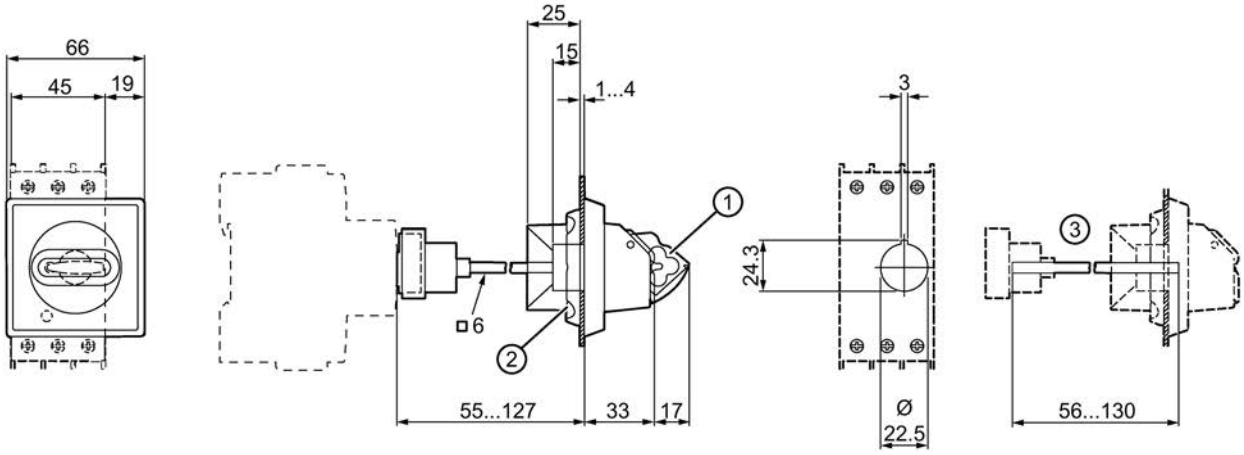

① Can be locked in neutral position with maximum shackle diameter 8 mm.

② Mounting with screw caps.

③, 3) Delivered with shaft length of 130 mm; adaptable by shortening the shaft.

Figure C-28 3RV2926-0B, 3RV2926-0C

3RV2926-0K, 3RV2926-0L

Long shaft (with bracket)[3)], for motor starter protectors sizes S00, S0 and S2

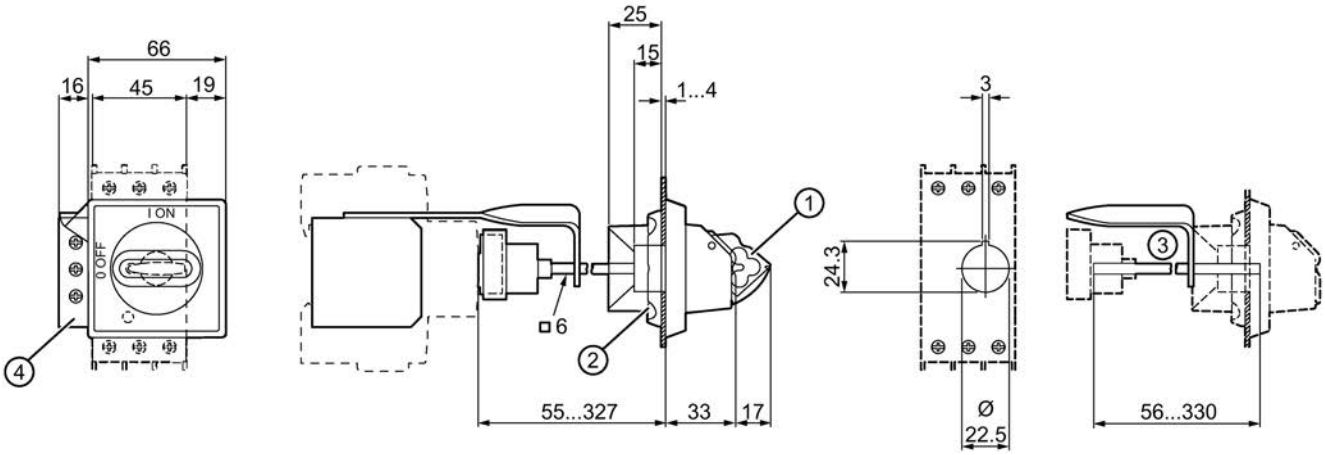

① Can be locked in neutral position with maximum shackle diameter 8 mm.

② Mounting with screw caps.

③, 3) Delivered with shaft length of 330 mm; adaptable by shortening the shaft.

④ Grounding terminal 35 mm² and metal bracket for 330 mm shaft.

Figure C-29 3RV2926-0K, 3RV2926-0L

C.7 Dimension drawings for 3RV2926-1 door-coupling rotary operating mechanisms

3RV2926-1B, 3RV2926-1C, 3RV2926-1K and 3RV2926-1L

Door-coupling rotary operating mechanisms for standard conditions for 3RV2 motor starter protectors in sizes S0, S2 and S3.

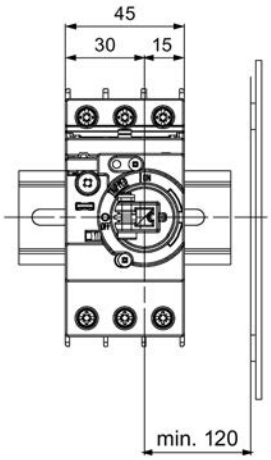

Figure C-30 3RV2.1 and 3RV2.2

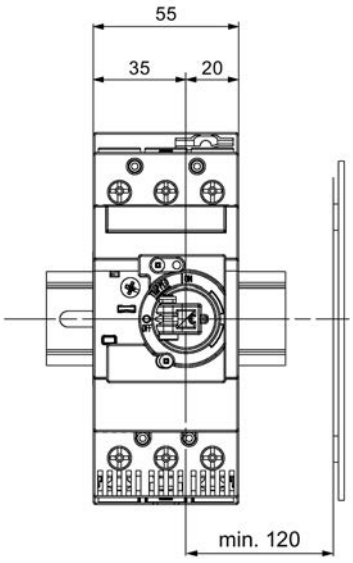

Figure C-31 3RV2.3

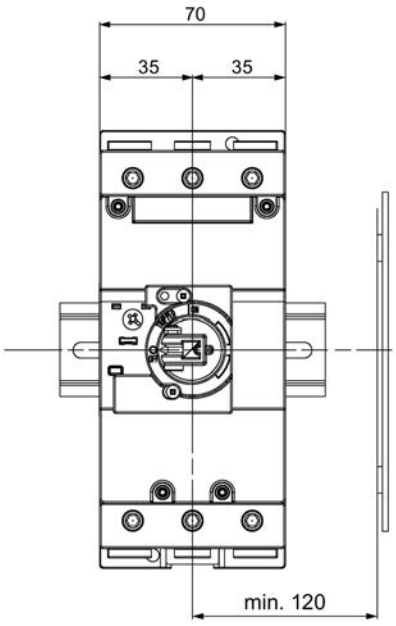

Figure C-32 3RV2.4

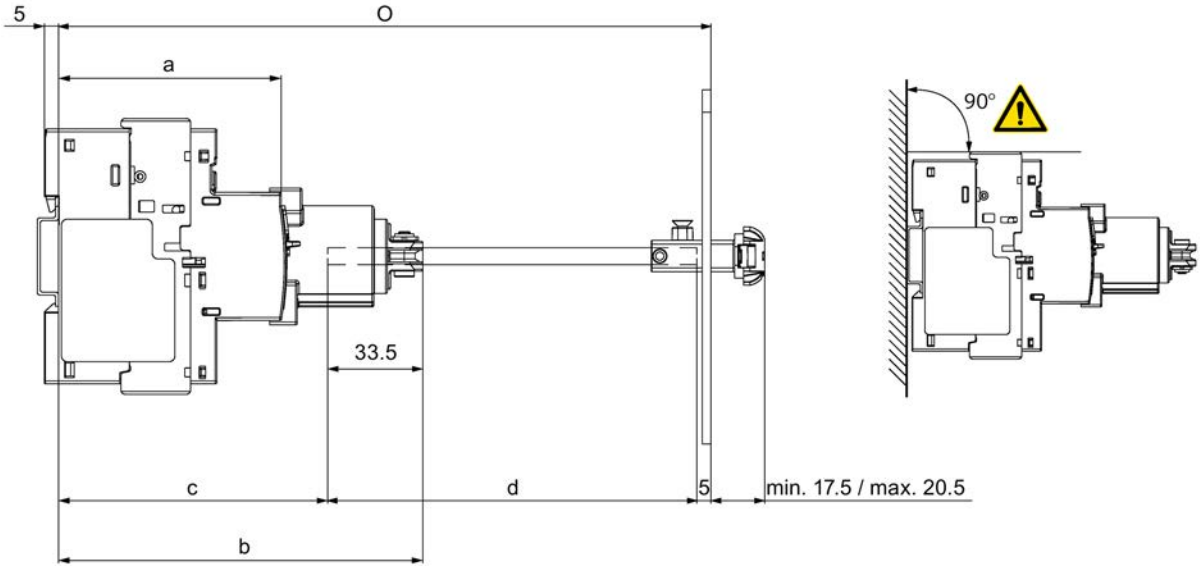

						3RV2926-1B 3RV2926-1C	3RV2926-1K 3RV2926-1L
						130	**330**
	Size	**a**	**b**	**c**	**d**	**O_{min}**	**O_{max}**
3RV2.1 3RV2.2	S0	78.4	128.3	95	O-c-5	230	430
3RV2.3	S2	131.8	181.7	148	O-c-5	283	483
3RV2.4	S3	157.3	207.2	174	O-c-5	309	509

Door-coupling rotary operating mechanisms for standard conditions with attached tolerance compensation 3RV2926-2Q for 3RV2 motor starter protectors sizes S0, S2 and S3.

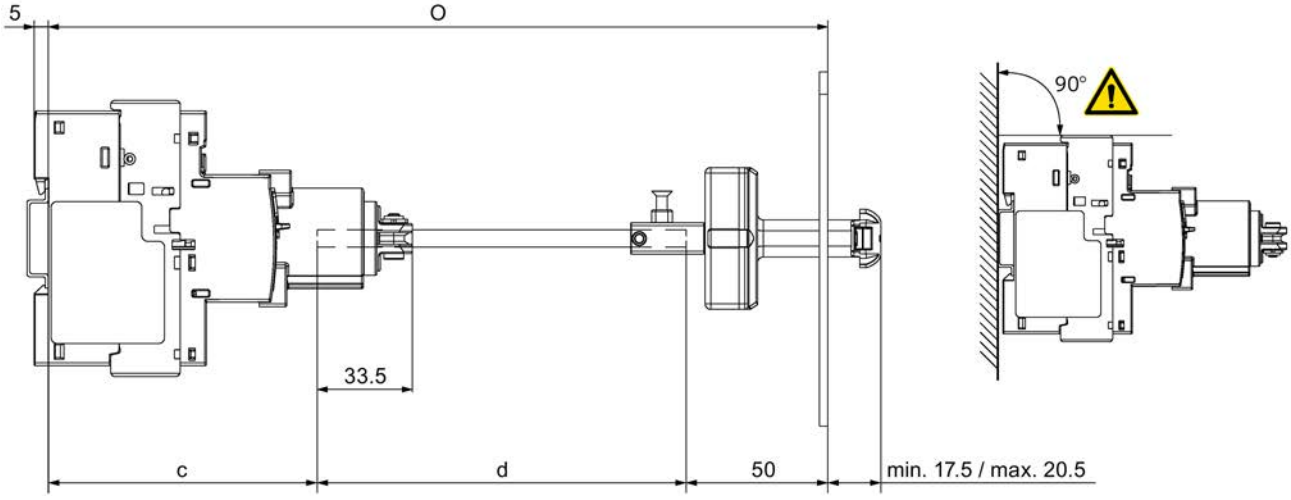

					3RV2926-1B 3RV2926-1C	3RV2926-1K 3RV2926-1L
		3RV2926-2Q			130	330
	Size	**c**	**d**	**O_{min}**	**O_{max}**	
3RV2.1 3RV2.2	S0	95	O-c-50	198	275	475
3RV2.3	S2	148	O-c-50	251	328	528
3RV2.4	S3	174	O-c-50	277	354	554

Dimension drawing and drilling plan for handle

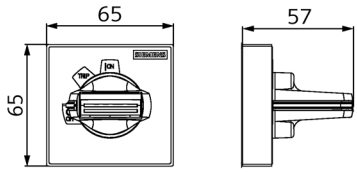

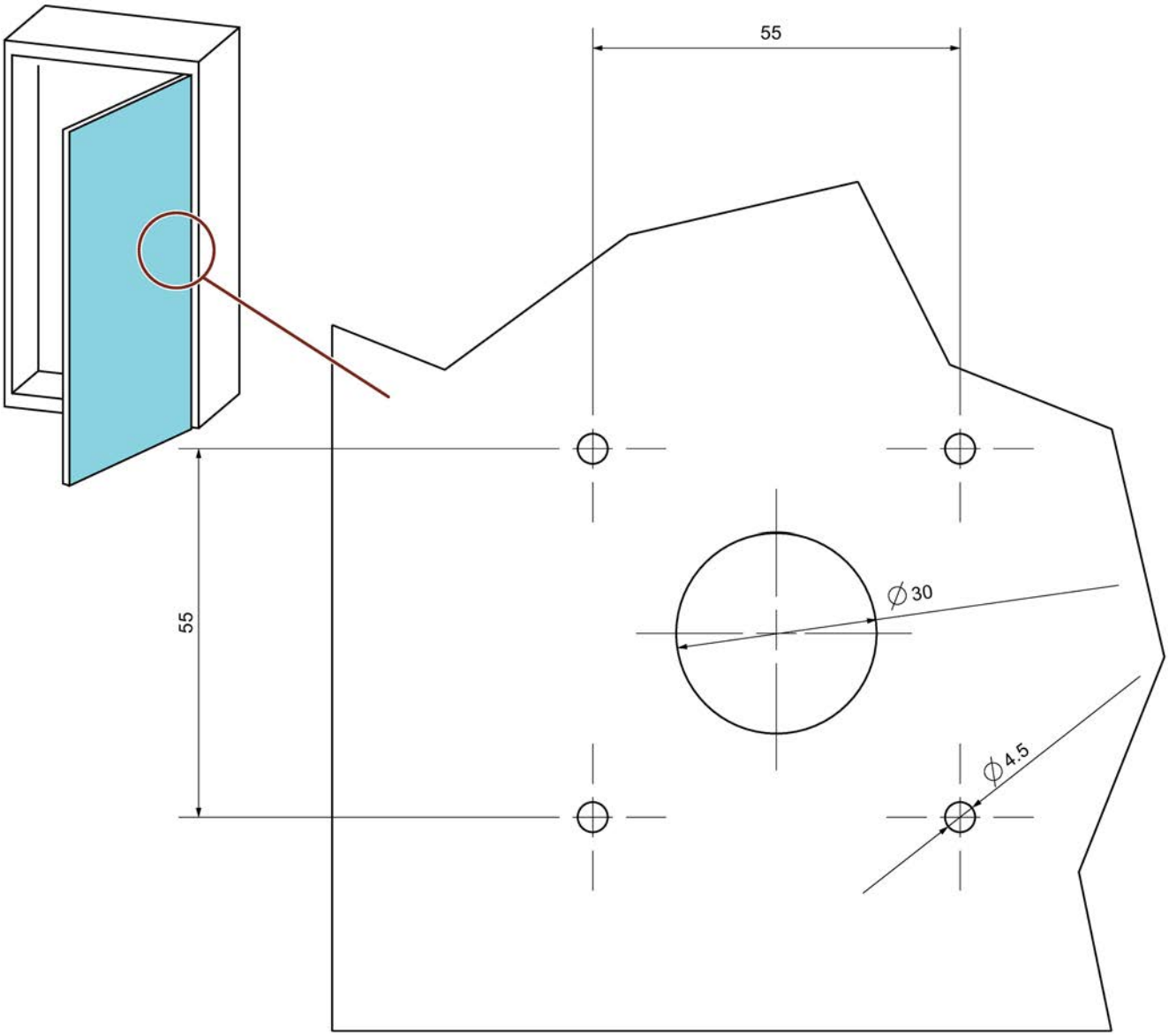

C.8 Dimension drawings for 3RV29.6-2. door-coupling rotary operating mechanisms for arduous conditions

3RV2926-2., 3RV2936-2.

for motor starter protector sizes S00, S0 and S2

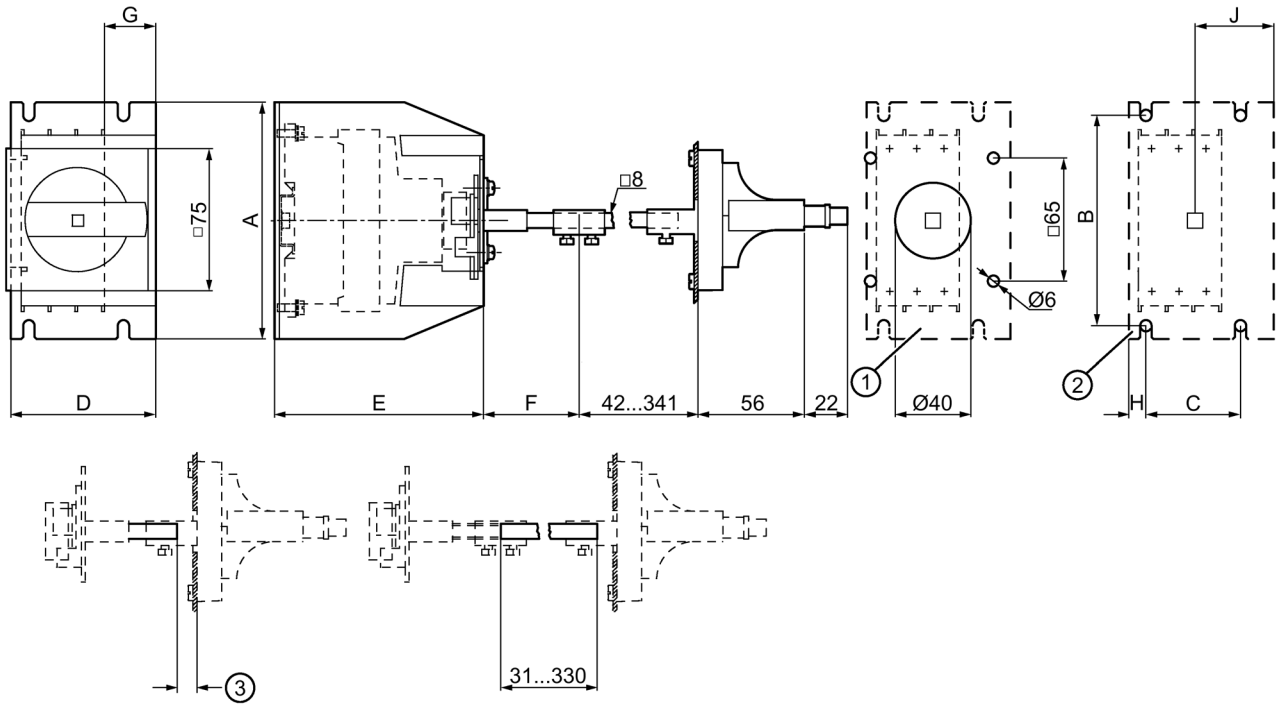

① Drilling pattern door

② Drilling pattern floor

③ min. 11 mm without shaft

Type	Size	A	B	C	D	E	F	G	H	J
3RV2926 -2..	S00/S0	125	111	50	77	112	50	27	9	42
3RV2936 -2..	S2	170	160	60	87	162	50	27	10	47

C.9 Dimension drawings for 3RV29.6-3 door-coupling rotary operating mechanisms for harsh conditions.

3RV2926-3., 3RV2936-3. and 3RV2946-3.

Door-coupling rotary operating mechanisms for harsh conditions for 3RV2 motor starter protectors sizes S0, S2 and S3.

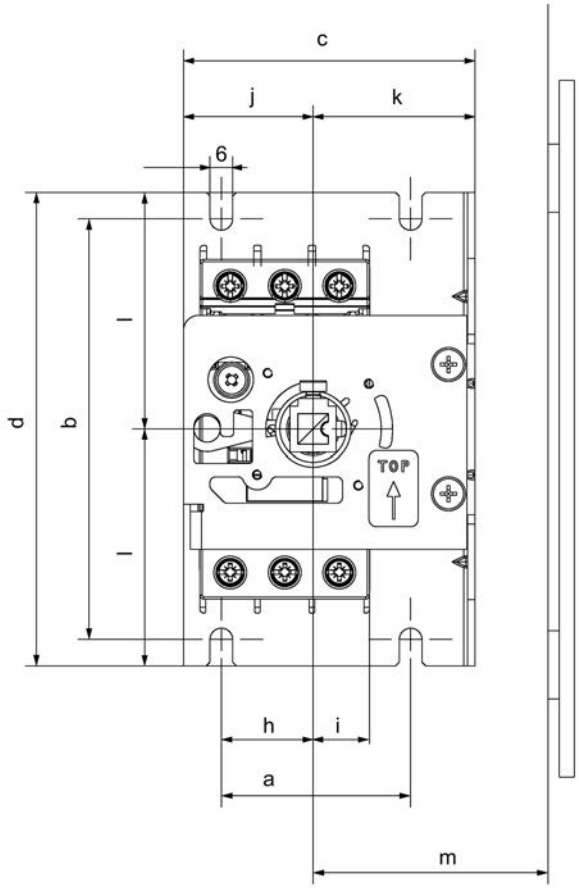

Type	Size	a	b	c	d	h	i	j	k	l	m
3RV2926 -3..	S0	50	115	77	125	24	15	34	43	62.5	min. 120
3RV2936 -3..	S2	60	160	87	170	30	20	40	47	85	min. 120
3RV2946 -3..	S3	60	185	102	195	30	35	40	62	97.5	min. 120

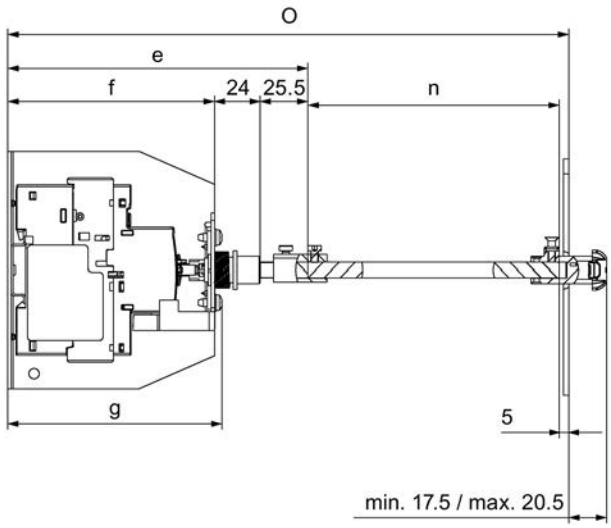

Type	Size	e	f	g	n	O_{min}	O_{max}
3RV2926-3..	S0	159	109.5	115	O-e-5	167	467
3RV2936-3..	S2	211	161.5	167	O-e-5	218	518
3RV2946-3..	S3	236	186.5	192	O-e-5	244	544

Door-coupling rotary operating mechanisms for harsh conditions with attached tolerance compensation 3RV2926-2Q for 3RV2 motor starter protectors sizes S0, S2 and S3.

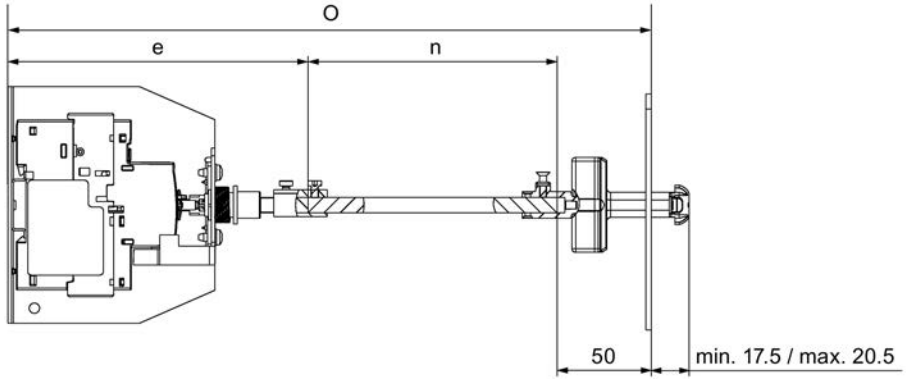

Type	Size	e	n	O_{min}	O_{max}
3RV2926-3..	S0	159	O-e-50	212	512
3RV2936-3..	S2	211	O-e-50	263	563
3RV2946-3..	S3	236	O-e-50	289	589

3RV2946-3. door-coupling rotary operating mechanism for harsh operating conditions for a main switch (size S3) according to UL 508A and NFPA 79

3RV2946-3. door-coupling rotary operating mechanism for harsh conditions with attached accessories shaft support 3RV2926-0P, tolerance compensation 3RV2926-2Q and the supplementary handle 3VA9137-0GC0. (gray or red/yellow) for a main switch (size S3) according to UL 508A and NFPA 79.

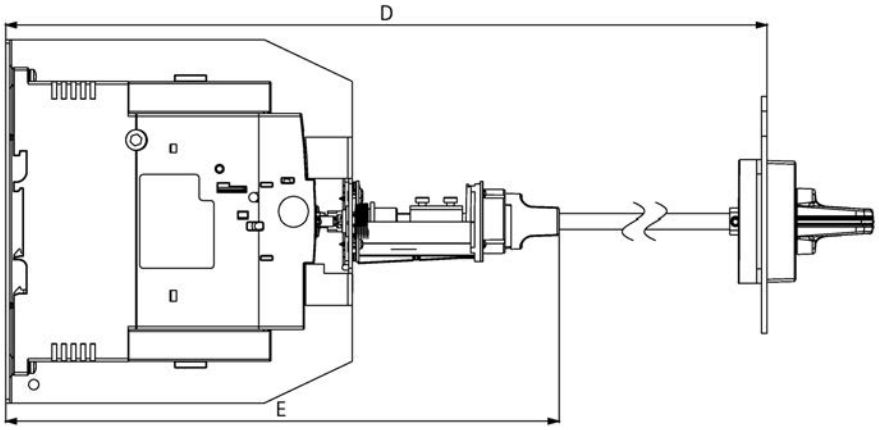

Type	Size	D_{min}	D_{max}	E
		3RV2926-0P **3VA9137-0GC01** **3VA9137-0GC05**	**3RV2926-2Q** **3RV2926-0P** **3VA9137-0GC01** **3VA9137-0GC05**	
3RV2946-3.	S3	329	374	298

Dimension drawing and drilling plan for handle

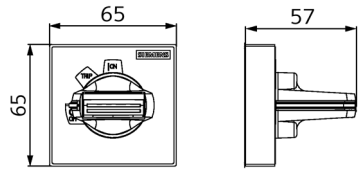

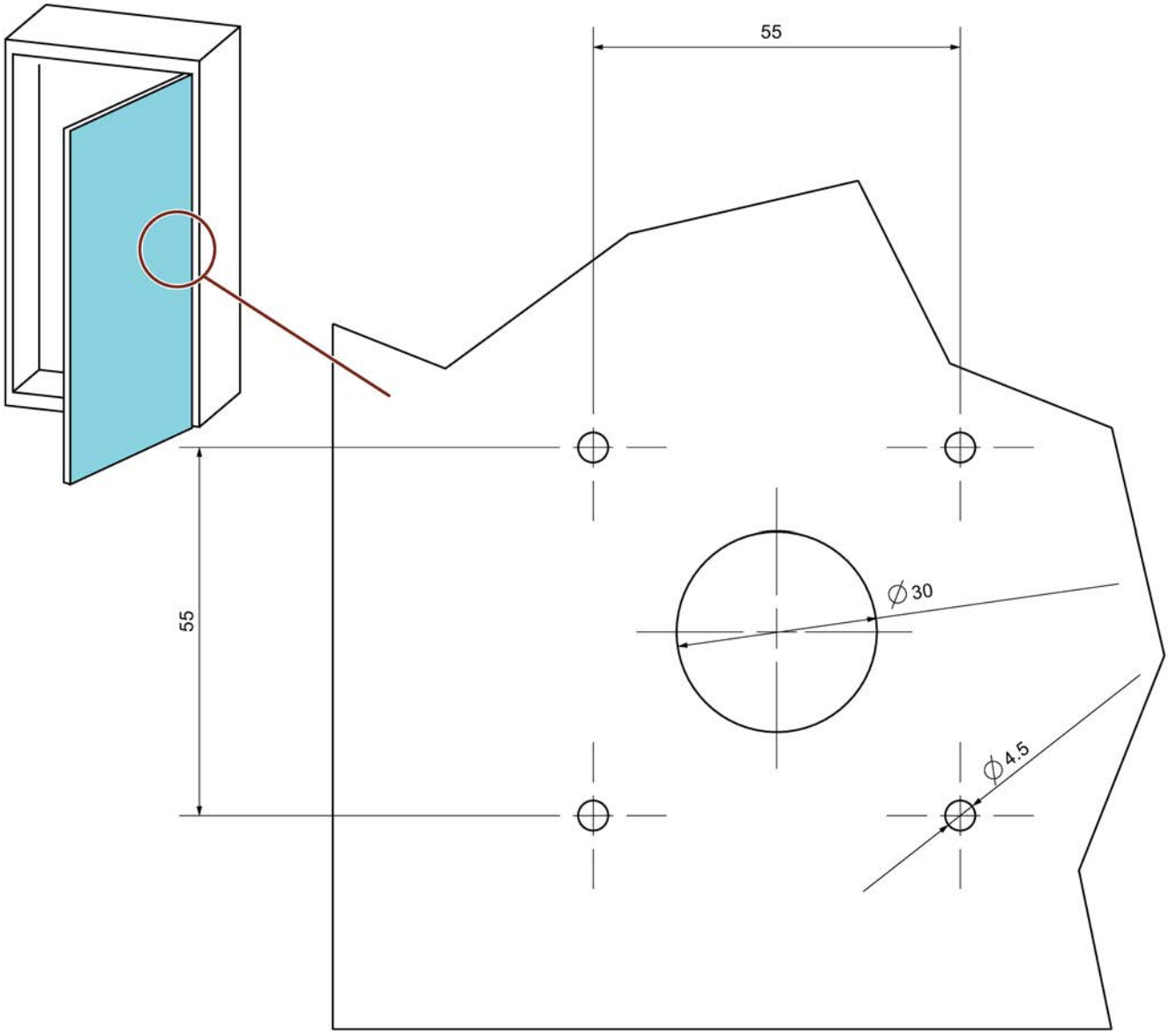

C.10 Dimension drawings for terminals for "Self-Protected Combination Motor Controller Type E" according to UL 60947-4-1 (UL 508)

3RV2928-1H

For motor starter protectors sizes S00 and S0

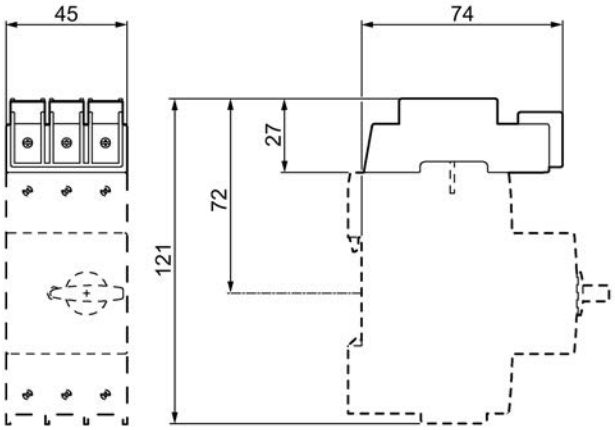

Figure C-33 3RV2928-1H

3RV2928-1K

For motor starter protectors sizes S00 and S0

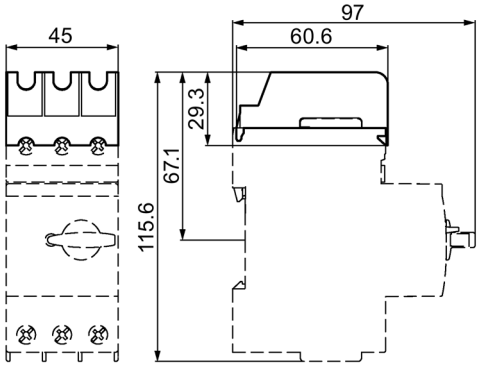

Figure C-34 3RV2928-1K

3RV2938-1K

for motor starter protectors size S2

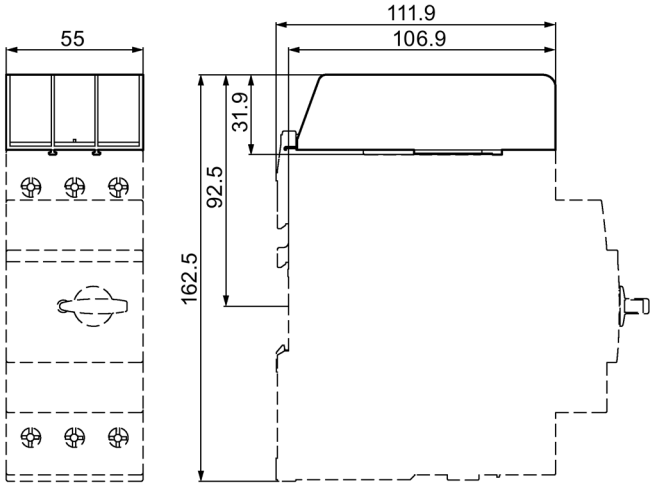

Figure C-35 3RV2938-1K

3RT2946-4GA07

for motor starter protectors size S3

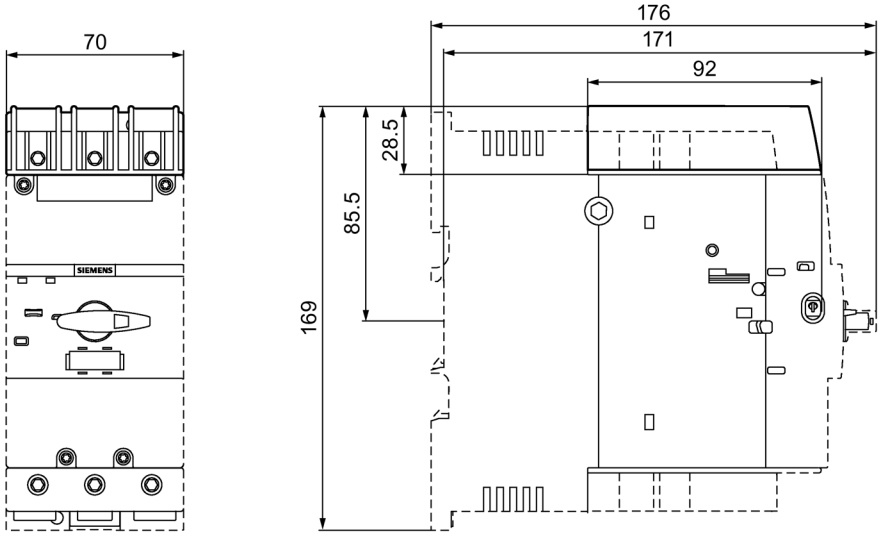

Figure C-36 3RT2946-4GA07

C.11 Dimension drawings for 3RV19.3-1.A00 molded-plastic surface-mounting enclosure

3RV1913-1.A00

For 3RV1011 motor starter protector (size S00)

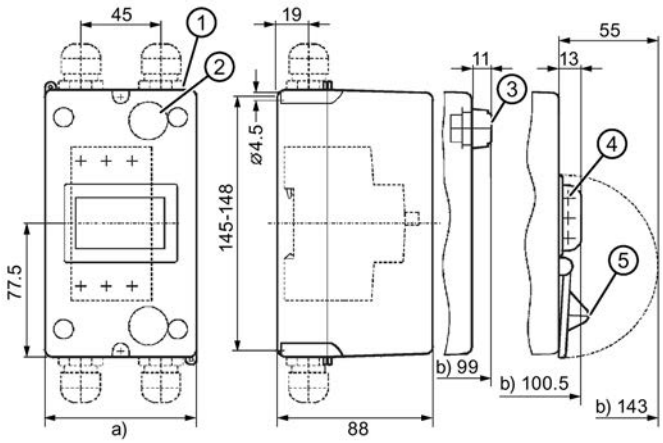

Type	a)
3RV1913-1CA00	85
3RV1913-1DA00	105

b) Dimensions refer to the mounting plane.

① Knockouts for M25 cable glands.

② Knockouts for M20 cable entry on the rear.

③ 3RV1903-5 indicator light

④ Maximum bracket diameter for bracket lock: 8 mm.

⑤ Locking device 3RV1913-6B

Figure C-37 3RV1913-1CA00, 3RV1913-1DA00

3RV1923-1.A00

For motor starter protectors sizes S00 and S0

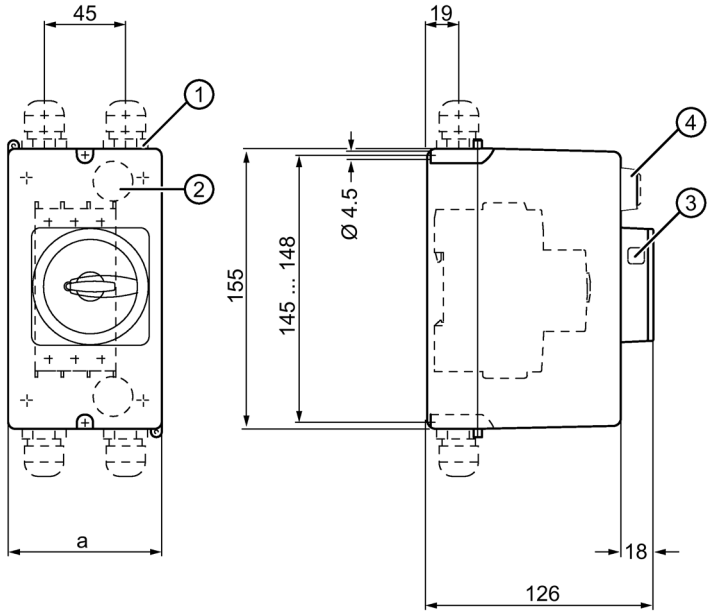

Type	a
3RV1923-1CA00	85
3RV1923-1DA00	105

① Knockouts for M25 cable glands.

② Knockouts for M20 cable entry on the rear.
The cable entries on the rear cannot be used with devices with spring-loaded connections 3RV2..11-...2. and 3RV2.21-...2..

③ Opening for padlock with maximum shackle diameter 6 to 8 mm.

④ 3RV1903-5 indicator light

Figure C-38 3RV1923-1.A00

3RV1933-1DA00, 3RV1933-1GA00

for motor starter protectors size S2

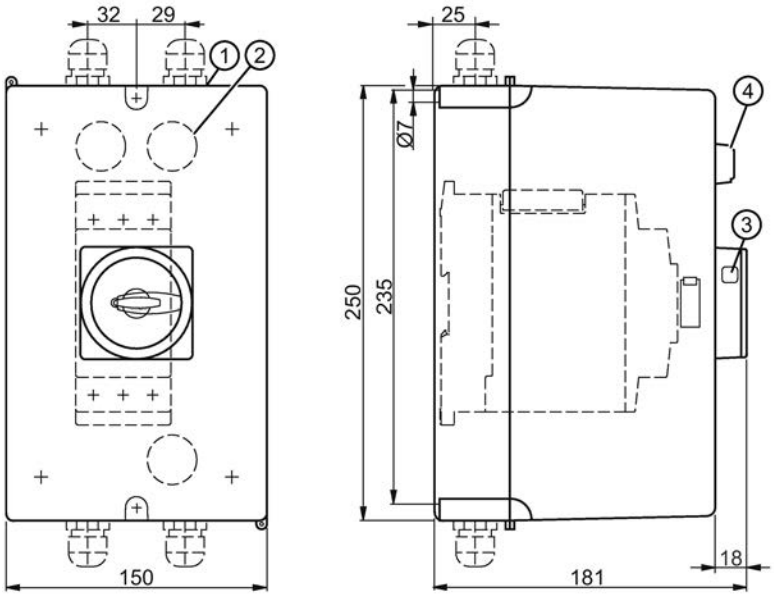

① Knockouts for M32 (left) and M40 (right) cable glands.

② Knockouts for M32 cable entry on the rear.

③ Opening for padlock with maximum shackle diameter 6 to 8 mm.

④ 3RV1903-5 indicator light

Figure C-39 3RV1933-1.A00

C.12 Dimension drawings for 3RV1923-1.A01 cast-aluminum surface-mounting enclosure

3RV1923-1DA01, 3RV1923-1GA01

For motor starter protectors sizes S00 and S0

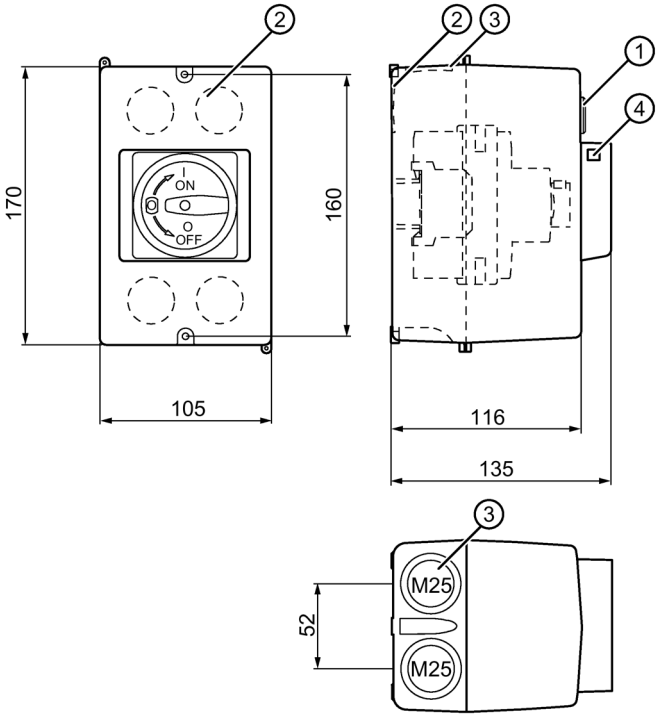

① 3RV1903-5 indicator light

② Knockouts for M20 cable entry on the rear.
The cable entries on the rear cannot be used with devices with spring-loaded connections 3RV2..11-...2. and 3RV2.21-...2..

③ Knockouts for M25 cable glands.

④ Opening for padlock with shackle diameter 6 to 8 mm

Figure C-40 3RV1923-1DA01, 3RV1923-1GA01

C.13 Dimension drawings for 3RV19.3-2.A00 molded-plastic flush-mounting enclosure

3RV1913-2DA00

For 3RV1011 motor starter protector (size S00)

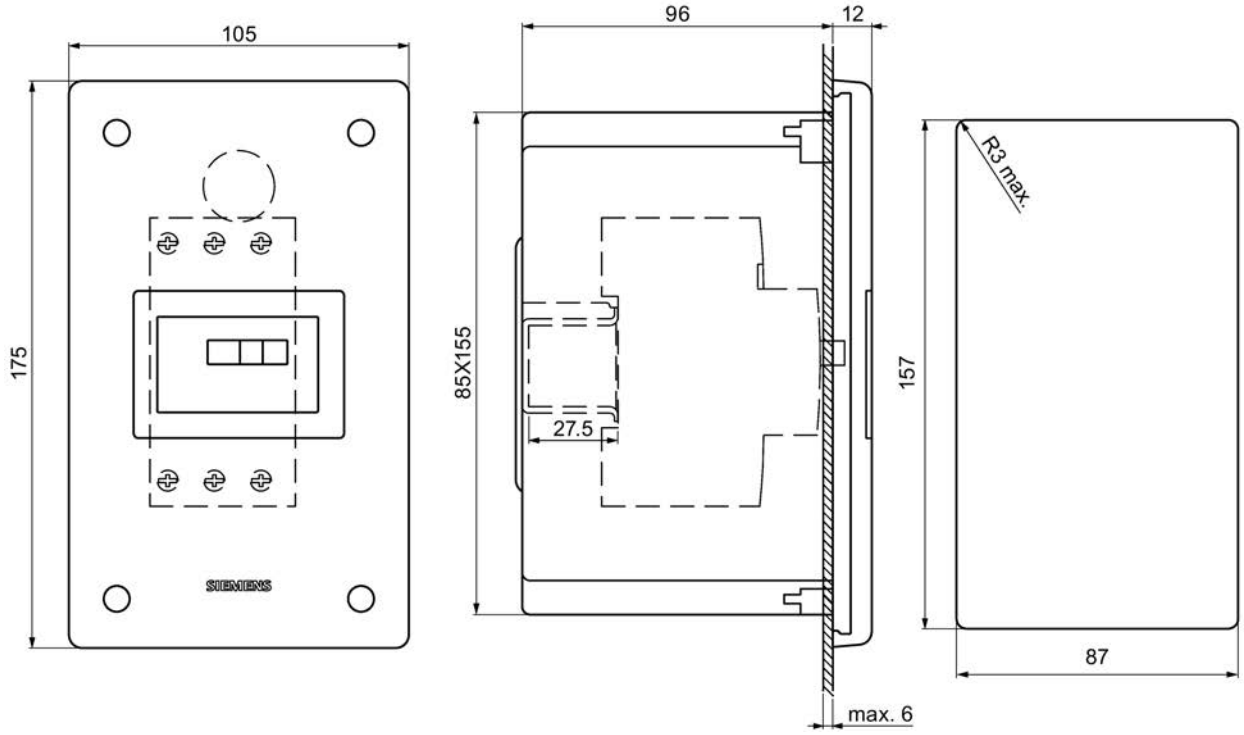

Figure C-41 3RV1913-2DA00

3RV1923-2DA00, 3RV1923-2GA00

For motor starter protectors sizes S00 and S0, not for devices with spring-loaded connections

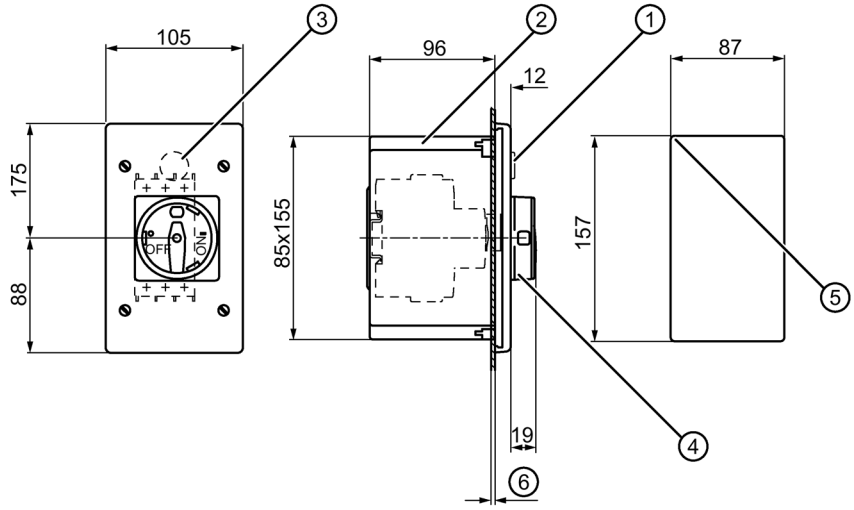

① 3RV1903-5 indicator light
② Knockouts for M25 cable glands.
③ Knockouts for M20 cable entry on the rear.
④ Opening for padlock with shackle diameter 6 to 8 mm.
⑤ R3 max.
⑥ max. 6

Figure C-42 3RV1923-2DA00, 3RV1923-2GA00

C.14 Dimension drawings for 3RV1923-4 molded-plastic front plates

3RV1923-4B, 3RV1923-4E

for motor starter protectors sizes S00, S0 and S2;
3RV1923-4G bracket only for motor starter protectors sizes S00 and S0

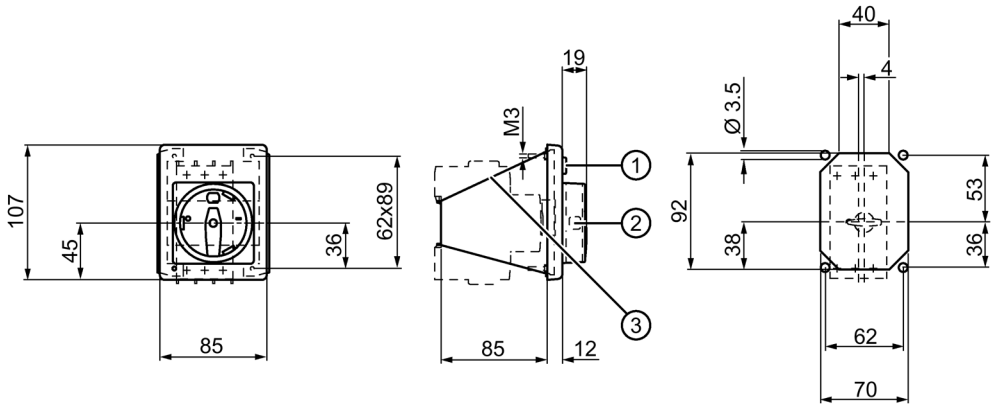

① 3RV1903-5 indicator light

② Opening for padlock with shackle diameter 6 to 8 mm.

③ 3RV1923-4G bracket

Figure C-43 3RV1923-4B, 3RV1923-4E

C.15 Dimension drawings 3RV2921-.M signaling switch

3RV2921-.M signaling switch

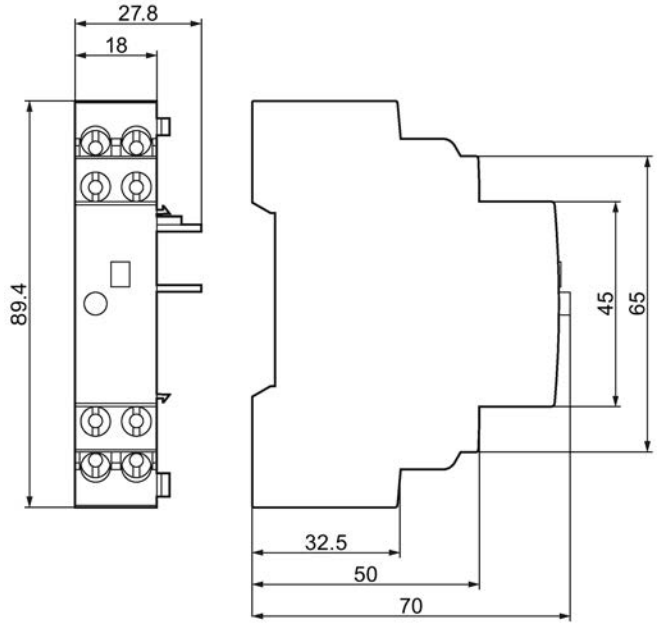

Figure C-44 3RV2921-1M signaling switch (screw-type connection system)

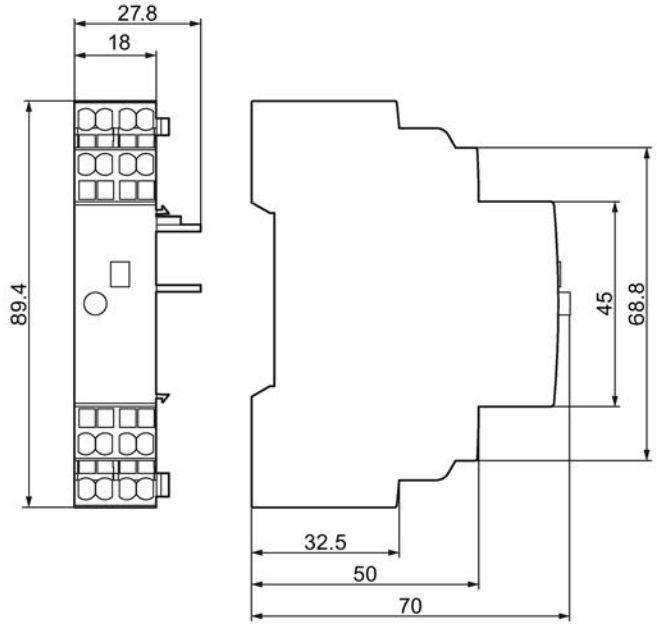

Figure C-45 3RV2921-2M signaling switch (spring-type connection)

Index

3

3D model, 17
3-phase busbar system
    Motor starter protector, 182, 229, 231, 235
3-phase busbar system (circuit breakers)
    Circuit breaker, 230, 233
3-phase busbar system (motor starter protectors)
    3-phase infeed terminal, 232
    Type E starters, 230, 232
3RV1 equipment features
    3RV1 motor starter protectors, 35
3RV2.1 / 3RV2.2 equipment features
    3RV2.1 / 3RV2.2 motor starter protectors, 36
3RV2.3 equipment features
    3RV2.3 motor starter protector, 38
3RV2.4 equipment features
    3RV2.4 motor starter protectors, 40
3RV2917 infeed system
    Motor starter protector, 250, 256, 257

A

Accessories
    Motor starter protector, 153
Accessories - motor starter protectors
    Busbar adapter, 240, 241
Accessories - Motor starter protectors
    3-phase busbar system, 182, 229, 231, 235
    3RV2917 infeed system, 250, 256, 257
    Auxiliary release, 171, 174, 175, 175
    Auxiliary switch blocks, 160, 162
    Busbar adapter, 248, 248
    Disconnector module, 176
    Door-coupling rotary operating mechanism, 208, 213
    Door-coupling rotary operating mechanism for harsh conditions, 204, 206
    Door-coupling rotary operating mechanism for standard conditions, 191, 192
    Enclosures and mounting accessories, 222, 223
    Installation rules, 157
    Knob attachment, 190, 226
    Link module for contactor, 262
    Phase barriers/terminal block, 181, 183, 185, 185
    Sealable cover, 228, 228
    Signaling switch, 168, 169
    Signaling switches, 165
    Terminal cover for cable lug connection and busbar connection, 263, 263
    Terminal cover for circuit breaker and the terminal block UL 60947-4-1 (UL 508) "Type E", 266
    Terminal covers for box terminal block, 265, 265
Accessories – Motor starter protectors
    Auxiliary switch blocks, 158
Accessories – Motor starter protectors
    Signaling switch, 163
Accessories – Motor starter protectors
    Disconnector module, 178, 180
Accessories – Motor starter protectors
    Disconnector module
Accessories – Motor starter protectors
    Door-coupling rotary operating mechanism for standard conditions, 195
Accessories – Motor starter protectors
    Door-coupling rotary operating mechanism for harsh conditions, 199
Accessories – Motor starter protectors
    Enclosures and mounting accessories, 218
Accessories – Motor starter protectors
    Busbar adapter, 244, 245, 246
Accessories – Motor starter protectors
    Busbar adapter
Accessories – Motor starter protectors
    Busbar adapter
Adjustment correction factors
    Frequency converter, 111
Advantages
    Motor starter protector, 42
Ambient temperature
    Motor starter protector, 106, 146
Applications
    Motor starter protector, 34
Auxiliary contacts (motor starter protector), 87
Auxiliary release
    Motor starter protector, 171, 174, 175, 175
Auxiliary release (motor starter protector)
    EMERGENCY OFF disconnection, 172
    Shunt release, 171
    Undervoltage release, 172
    Voltage ranges, 174
Auxiliary switch blocks
    Motor starter protector, 158, 160, 162

Auxiliary switch blocks (motor starter protector)
Solid-state compatible, 158

B

Basic knowledge, 14
Busbar adapter
Motor starter
protector, 240, 241, 244, 245, 246, 248, 248

C

CAx data, 17
Circuit breaker
Circuit breaker, 230
Motor starter protector, 105
Clearance, 182
Conductor cross-sections, 132
Configuration guidelines (motor starter protectors)
Frequency converter, 111
Inverter with pulsed voltage, 111
Connection systems
Motor starter protector, 32, 131
Coupling driver
Motor starter protector, 188
Creepage distance, 182
CSA
Motor starter protector, 101
Current reduction
Motor starter protector, 147
Current setting
Motor starter protector, 146

D

Derating
Motor starter protector, 106
Derating (motor starter protectors)
3RV2917 infeed system, 256
Device versions
Motor starter protector, 33
Dimension drawings, 17
Disconnector module
Motor starter protector, 176, 178, 180
Disconnector module (motor starter protector)
Maintenance work, 176
Distance protection
Motor starter protector, 98
Door-coupling rotary operating mechanism
Motor starter protector, 208, 213
Door-coupling rotary operating mechanism (motor starter protector)
Door interlocking, 188
Isolating function, 188
Locking, 211, 216
Maintenance work, 188
Door-coupling rotary operating mechanism for harsh conditions
Motor starter protector, 199, 204, 206
Door-coupling rotary operating mechanism for standard conditions
Motor starter protector, 191, 192, 195
Double ground fault
Motor starter protector, 100, 100

E

EMERGENCY OFF door-coupling rotary operating mechanism
Motor starter protector, 189
EMERGENCY OFF rotary operating mechanism, 218
Enclosure for surface mounting, 218
Enclosures and mounting accessories
Motor starter protector, 218, 222, 223
Enclosures and mounting accessories (motor starter protectors)
Enclosures, 223
Flush-mounting enclosure, 224, 225
Front plates, 227
EPLAN macros, 17
Explosion protection
Motor starter protector, 110
Extension shaft
Motor starter protector, 188

F

Frequency converter
Motor starter protector, 111, 113
Frequency converters
Motor starter protector, 112
Front plates, 221
Fuse monitoring
Motor starter protector, 96

I

Inrush currents
Motor starter protector, 94
Installation altitude
Motor starter protector, 106

Installation guidelines
Motor starter protector, 116, 117, 117, 117
Motor starter protectors with limiter function, 124
Installation rules
Accessories - Motor starter protectors, 157
Insulation strength, 182
Inverter with pulsed voltage, 111, 113
IT system
Motor starter protector, 100

K

Knob
Motor starter protector, 188
Knob attachment
Motor starter protector, 190, 226

L

Link module for contactor
Motor starter protector, 262
Locking
Door-coupling rotary operating mechanism, 211, 216

M

Main switch
Motor starter protector, 95
Manual motor controller
Motor starter protector, 101, 101
Manual motor controller suitable for tap conductor protection in group installations
Motor starter protector, 101, 102
Minimum clearance
Motor starter protector, 116
Molded-plastic enclosure, 218
Motor protection
Motor starter protector, 85
Mounting position
Motor starter protector, 117

O

Operating instructions, 279
Overload protection
Motor starter protector, 46
Overload relay function
Motor starter protector, 87, 150
Overload release
Motor starter protector, 148

P

Phase barriers
Motor starter protector, 103
Phase barriers/terminal block
Motor starter protector, 181, 183, 185, 185
Phase loss sensitivity
Motor starter protector, 45, 50, 95
Power distribution, 250
Power supply, 250

R

Reclosing
Motor starter protector, 152
References, 279
Ring cable lug connection system, 142
Rotary operating mechanism, 188

S

Scope of validity
Manual, 15
Screw mounting
Motor starter protector, 118, 118
Screw-type connection system, 132
Sealable cover
Motor starter protector, 228, 228
Securing
Disconnector module, 180
Motor starter protector, 151
Selection
Motor starter protector, 110
Self-protected combination motor controller (type E), 103
Motor starter protector, 101
Setting the current
Motor starter protector, 146
Shaft support, 206
Short-circuit breaking capacity
Motor starter protector, 100
Short-circuit protection
Motor starter protector, 46, 56
Signaling switch
Motor starter protector, 163, 168, 169
Signaling switch (motor starter protector)
Diagnostics, 169
Operation, 169

Signaling switches
    Motor starter protector, 165
Single-phase load
    Motor starter protector, 51
Snap-on mounting
    Motor starter protector, 118, 118
Spring-loaded connection system, 140
Standards
    Motor starter protector, 21
Starter combinations
    Motor starter protector, 92
Supplementary handle, 206
System protection
    Motor starter protector, 86

T

Terminal blocks
    Motor starter protector, 103
Terminal cover for cable lug connection and busbar connection
    Motor starter protector, 263, 263
Terminal cover for circuit breaker and the terminal block UL 60947-4-1 (UL 508) "Type E"
    Motor starter protector, 266
Terminal covers for box terminal block
    Motor starter protector, 265, 265
Terminal designations
    Motor starter protector, 116
Test function
    Motor starter protector, 52
Tolerance compensation, 195, 204, 206
Transformer protection, 46
    Motor starter protector, 94
Tripping characteristics
    Motor starter protector, 47
Tripping classes
    Motor starter protector, 47

U

UL
    Motor starter protector, 101

V

Voltage transformer circuit breaker
    Motor starter protector, 98