© Siemens 2022

SIEMENS

Motion Control

SINUMERIK 840

Equipment for Machine Tools

Catalog
NC 62

Edition
2021

siemens.com/sinumerik

Промэлектроника, sales@prom-elec.com

© Siemens 2022

Related catalogs

Motion Control NC 64
SINUMERIK MC
Equipment for woodworking, glass working and stone working machines, as well as special technologies

PDF (E86060-K4464-A101-A1-7600)

Motion Control NC 82
SINUMERIK 828
Equipment for Machine Tools

PDF (E86060-K4482-A101-B1-7600)

Motion Control Drives D 21.4
SINAMICS S120 and SIMOTICS

E86060-K5521-A141-A1-7600

SIMATIC ST 70
Products for
Totally Integrated Automation

PDF (E86060-K4670-A101-B8-7600)

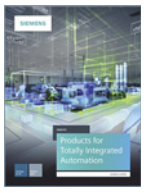

SIMATIC HMI / PC-based Automation ST 80/ST PC
Human Machine Interface Systems
PC-based Automation

PDF (E86060-K4680-A101-C9-7600)

Industrial Communication IK PI
SIMATIC NET

E86060-K6710-A101-B8-7600

SITOP KT 10.1
SITOP
Power Supply

E86060-D4001-A510-E0

SITRAIN
Digital Industry Academy

www.siemens.com/sitrain

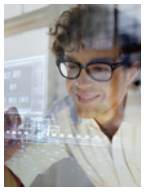

Industry Mall
Information and Ordering Platform
on the Internet:

www.siemens.com/industrymall

Scan the QR code to download the SINUMERIK 840D sl Glossary as a PDF file to your tablet or smartphone.

Via the Siemens Industry Mall:
https://mall.industry.siemens.com/mall/en/en/Catalog/Products/10352767

© Siemens 2022

SINUMERIK 840

Equipment for Machine Tools

Motion Control

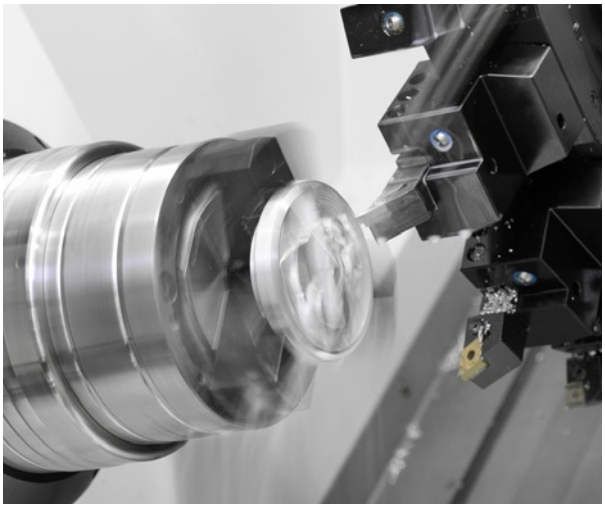

Catalog NC 62 · 2021

Supersedes:
Catalog NC 62 · 2019

Refer to the Industry Mall for current updates of this catalog:
www.siemens.com/industrymall

Please contact your local Siemens branch.

© Siemens 2022

NEW

Click on an Article No. in the catalog PDF to call it up in the Industry Mall and to obtain all the information.

Article No.
6SL3070-0AA00-0AG0
6SL3072-0AA00-0AG0

Or directly on the internet, e.g.
www.siemens.com/product?6SL3070-0AA00-0AG0

The products and systems described in this catalog are distributed under application of a certified quality management system in accordance with DIN EN ISO 9001. The certificate is recognized by all IQNet countries.

Introduction 1

SINUMERIK CNC 2

SINUMERIK Operate 3

CNC Shopfloor Management Software 4

SINAMICS S120 drive system 5

SIMOTICS motors 6

Motion Control Encoder measuring systems 7

MOTION-CONNECT connection systems 8

Lifecycle Services 9

Product Partner SINUMERIK Systems 10

Appendix 11

© Siemens 2022

Digital Enterprise

The building blocks that ensure everything works together perfectly in the digital enterprise

Digitalization is already changing all areas of life and existing business models. It is placing greater pressure on industry while at the same time creating new business opportunities. Today, thanks to scalable solutions from Siemens, companies can already become a digital enterprise and ensure their competitiveness.

Industry faces tremendous challenges

Reduce time-to-market

Today manufacturers have to bring products to market at an ever-increasing pace despite the growing complexity of these products. In the past, a major manufacturer would push aside a small one, but now it is a fast manufacturer that overtakes a slow one.

Boost flexibility

Consumers want customized products, but at a price they would pay for a mass-produced item. That only works if production is more flexible than ever before.

Improve quality

To ensure a high level of quality while meeting legal requirements, companies have to establish closed quality loops and enable the traceability of products.

Boost efficiency

Today the product itself needs to be sustainable and environmentally friendly, while energy efficiency in production has become a competitive advantage.

Increase security

Increasing networking escalates the threat to production facilities of cyberattacks. Today more than ever, companies need suitable security measures.

© Siemens 2022

The digital enterprise has already become a reality

To fully benefit from all the advantages of digitalization, companies first have to achieve complete consistency of their data. Fully digitally integrated business processes, including those of suppliers, can help to create a digital representation of the entire value chain. This requires

- the integration of industrial software and automation,
- expansion of the communication networks,
- security in automation,
- and the use of business-specific industrial services.

MindSphere

The cloud-based open IoT operating system from Siemens

With MindSphere, Siemens offers a cost-effective and scalable cloud platform as a service (PaaS) for the development of applications. The platform, designed as an open operating system for the Internet of Things, makes it possible to improve the efficiency of plants by collecting and analyzing large volumes of production data.

Totally Integrated Automation (TIA)

Where digitalization becomes reality

Totally Integrated Automation (TIA) ensures the seamless transition from the virtual to the real world. It already encompasses all the necessary conditions for transforming the benefits of digitalization into true added value. The data that will form the digital twin for actual production is generated from a common base.

Digital Plant
Learn more about the digital enterprise for the process industry
www.siemens.com/digitalplant

Digital Enterprise Suite
Learn more about the digital enterprise for the discrete industry
www.siemens.com/digital-enterprise-suite

© Siemens 2022

Integrated Drive Systems

Faster on the market and in the black with Integrated Drive Systems

Integrated Drive Systems are Siemens' trendsetting answer to the high degree of complexity that characterizes drive and automation technology today. The world's only true one-stop solution for entire drive systems is characterized in particular by its threefold integration: Horizontal, vertical, and lifecycle integration ensure that every drive system component fits seamlessly into the whole system, into any automation environment, and even into the entire lifecycle of a plant.

The outcome is an optimal workflow – from engineering all the way to service that entails more productivity, increased efficiency, and better availability. That's how Integrated Drive Systems reduce time to market and time to profit.

Horizontal integration

Integrated drive portfolio: The core elements of a fully integrated drive portfolio are frequency converters, motors, couplings, and gear units. At Siemens, they're all available from a single source. Perfectly integrated, perfectly interacting. For all power and performance classes. As standard solutions or fully customized. No other player in the market can offer a comparable portfolio. Moreover, all Siemens drive components are perfectly matched, so they are optimally interacting.

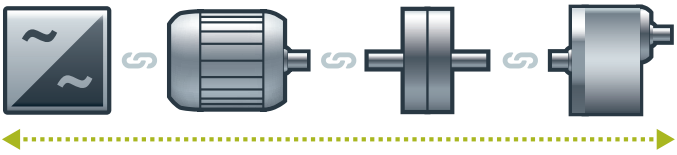

You can boost the availability of your application or plant to up to

*e.g., conveyor application

Vertical integration

Thanks to **vertical integration**, the complete drive train is seamlessly integrated in the entire automation environment – an important prerequisite for production with maximum value added. Integrated Drive Systems are part of Totally Integrated Automation (TIA), which means that they are perfectly embedded into the system architecture of the entire industrial production process. This enables optimal processes through maximum communication and control.

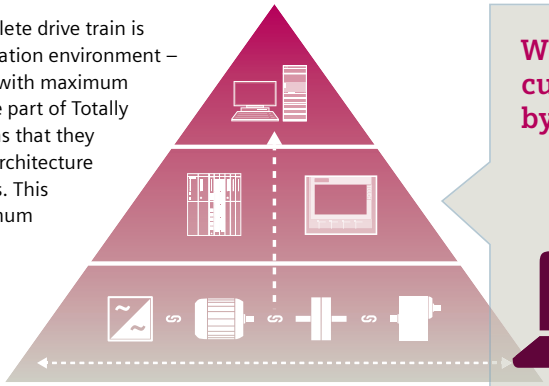

With TIA Portal you can cut your engineering time by up to

Lifecycle integration

Lifecycle integration adds the factor of time: Software and service are available for the entire lifecycle of an Integrated Drive System. That way, important optimization potential for maximum productivity, increased efficiency, and highest availability can be leveraged throughout the system's lifecycle – from planning, design, and engineering to operation, maintenance, and all the way even to modernization.

With Integrated Drive Systems, assets become important success factors. They ensure shorter time to market, maximum productivity and efficiency in operation, and shorter time to profit.

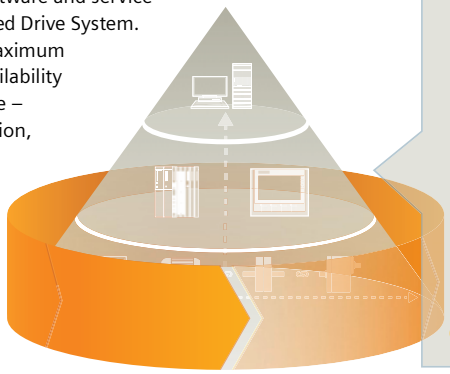

With Integrated Drive Systems you can reduce your maintenance costs by up to

www.siemens.com/ids

© Siemens 2022

Introduction

1/2	**SINUMERIK 840D sl**
1/7	**Industry solutions and machining technologies**
1/8	**Digitalization**
1/8	CNC Shopfloor Management Software
1/10	CNC performance
1/11	**Motion Control Services**

© Siemens 2022

Overview

SINUMERIK – the CNC portfolio for the global machine tool market

From basic, standard CNC machines through standardized machine tools up to modular, high-end machine concepts – SINUMERIK CNCs offer the optimum solution for each and every machine concept.

Whether individual part or mass production, basic or complex workpieces – SINUMERIK is the highly productive automation solution across all production domains. These extend from prototype and tool building through mold making up to large series production.

www.siemens.com/sinumerik

SINUMERIK 808	SINUMERIK 828	SINUMERIK MC
The entry-level CNC for simple standard machines The SINUMERIK 808D ADVANCED control is a panel-based CNC for the lower performance range. The compact and user-friendly entry-level solution is used for basic turning and milling applications. Features such as easy operation, commissioning and maintenance, combined with an optimum cost position, represent the perfect basis for equipping entry-level CNC machines.	**The compact CNC for standardized machines** The SINUMERIK 828 control is ideally suited for standardized machines with low levels of modularity and high unit quantities. The powerhouse SINUMERIK 828D in the compact class is the solution for cost-sensitive markets that demand high CNC performance and easy commissioning.	**The CNC for special technologies** Thanks to its integrated SINUMERIK CNC, SIMATIC Controller and Windows 10 operating system, the SINUMERIK MC is the ideal solution for machine tools with individual user interfaces.
• Panel-based compact CNC • Up to 6 axes/spindles • 1 machining channel • 8.4" color display • PLC based on SIMATIC S7-200	• Panel-based compact CNC • Up to 10 axes/spindles and 2 auxiliary axes • Up to 2 machining channels and 2 handling channels T, M, G • 15.6" touch display • PLC based on SIMATIC S7-200	• PC-based CNC • Open operator control design via WinCC or Run MyHMI /3GL • Up to 8 axes/spindles • Up to 4 machining channels • Modular panel concept • SIMATIC S7-1500F PLC
SINAMICS V70 SIMOTICS S-1FL6 SIMOTICS M-1PH1	SINAMICS S120 Combi SINAMICS S120 Booksize SIMOTICS	SINAMICS S120 Booksize with CU320-2 SINAMICS S210 SIMOTICS
SINUMERIK 808D ADVANCED	SINUMERIK 828D	SINUMERIK MC

SINUMERIK 840	SINUMERIK ONE
The open CNC for modular machine concepts The SINUMERIK 840D sl offers the absolute maximum in terms of openness and flexibility. This makes the SINUMERIK 840D sl the optimum CNC for machines with mechanical configurations that are to be adapted to the needs of the individual users.	**The digital native CNC – the next level of the digital transformation** SINUMERIK ONE is the world's first CNC developed from scratch and specifically designed to meet the challenges of digital transformation in the machine tool industry. This has led to a paradigm shift, with the digital twin constituting an integral part of the control and forming the essential basis for real-world action. Machining processes and machine behavior can be simulated in realistic conditions with meticulous attention to detail.
• Drive-based modular CNC • Multi-technology CNC • Up to 93 axes/spindles and any number of PLC axes • Up to 30 machining channels • Modular panel concept, up to 24" color display • PLC based on SIMATIC S7-300	• Digital twin as integral part of the CNC • Drive and panel-based modular CNC • Multi-technology CNC • Up to 31 axes/spindles and any number of PLC axes • Up to 10 machining channels • Modular panel concept with up to 24" multi-touch color display • SIMATIC S7-1500F PLC
SINAMICS S120 Booksize SINAMICS S120 Chassis SINAMICS S120 Combi SIMOTICS	SINAMICS S120 Booksize SINAMICS S120 Chassis SINAMICS S120 Combi SIMOTICS
SINUMERIK 840D sl	SINUMERIK ONE

© Siemens 2022

Overview

SINUMERIK 840D sl – ultimate performance in the premium class

The SINUMERIK 840D sl is quite rightly regarded as the benchmark for premium CNCs. Maximum CNC performance and unequalled flexibility and openness form the basis for almost any machine concept.

Maximum performance

SINUMERIK 840D sl offers a virtually inexhaustible performance potential, thanks to its drive-based, high-performance NCUs (Numerical Control Units) with state-of-the-art multicore processor technology. This means up to 93 axes can be controlled in 30 machining channels in the NCU link. Machine concepts that require fewer axes benefit from the performance capability of the SINUMERIK 840D sl with its combination of the highest machining precision standards and shortest machining times.

Benchmark for open architecture

The openness of the SINUMERIK 840D sl system is second to none. The CNC can be optimally adapted to the machine's technology. For example, the operating equipment can be added to and adapted, and even robots and handling systems can be integrated. Thanks to the openness in the CNC kernel and in the drive, unique mechanical concepts – such as adapted control algorithms and specific kinematic transformations – can be implemented.

Communication at all levels

SINUMERIK 840D sl fits seamlessly into the Siemens automation world with PROFINET, the leading Industrial Ethernet standard. Totally Integrated Automation stands for a unique level of integration – from field level through production up to the corporate level. The result is optimum interaction between all components of the automation system and, as a consequence, an extremely transparent, highly available manufacturing process.

Intuitive operator control and monitoring

SINUMERIK panels make operator control and monitoring easier for machine operators. With their touch screens, they open the way to a new machine operating philosophy. In conjunction with the state-of-the-art SINUMERIK Operate user interface, touch and gesture control are establishing themselves in production. In addition, various mobile SINUMERIK handheld terminals such as SINUMERIK HT 8 are available to the machine operator, facilitating simplified operation thanks to the functional combination of the operator and machine control panels.

Modular and scalable

In addition to scalable NCU performance, SINUMERIK 840D sl has a high degree of modularity when it comes to the operating components. With a flexible M:N operating concept, for example, any operator panel can be combined with the NCU, the SINUMERIK 840D sl ideally fits the operating philosophy of compact machines through to state-of-the-art high-end machine concepts.

© Siemens 2022

Overview

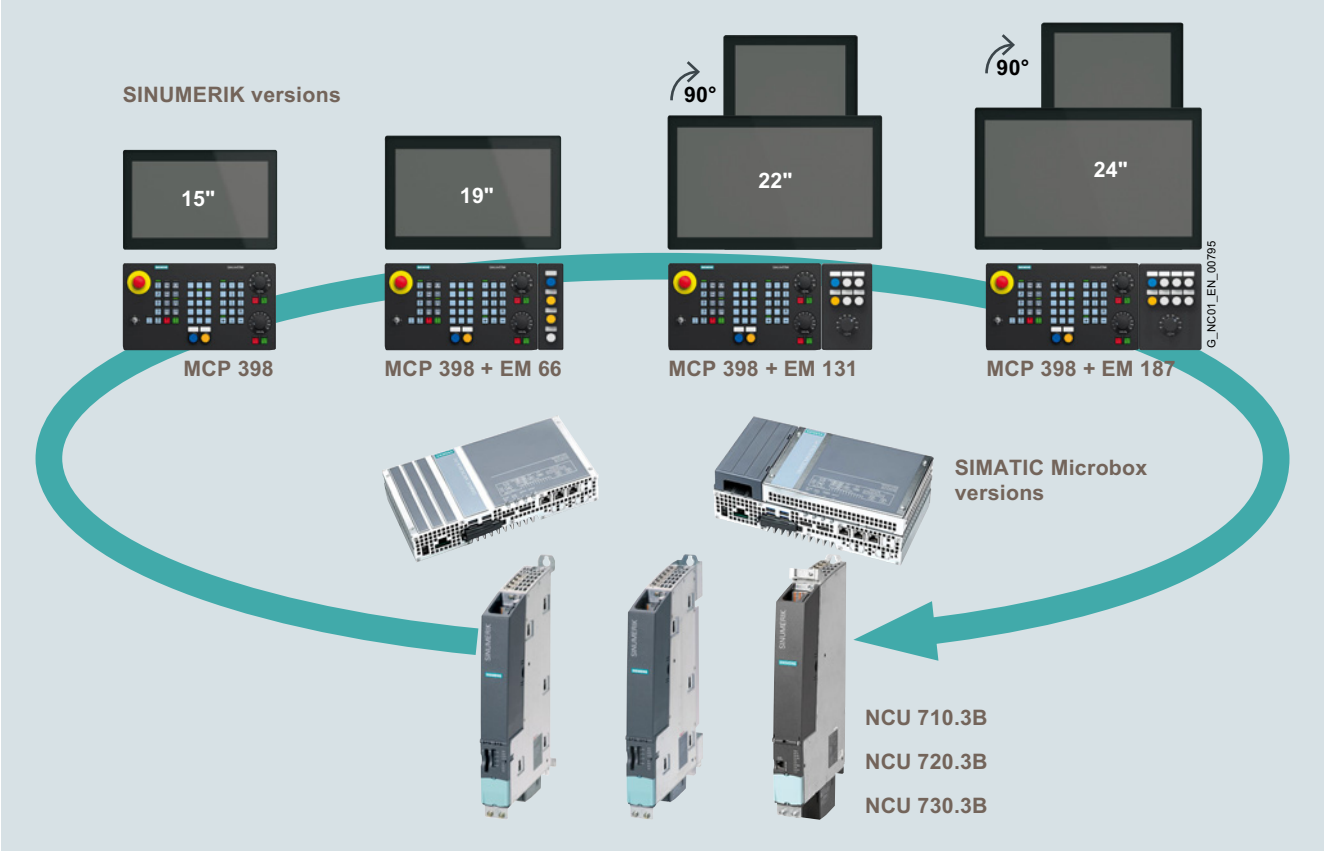

© Siemens 2022

Design

SINUMERIK 840D sl controls, in conjunction with SINAMICS S120 drives and SIMOTICS motors, are optimally designed to address the requirements of machine tools. The complete and integrated SINAMICS drives family covers all performance levels and is characterized by the highest level of flexibility, functionality, and efficiency. SIMOTICS motors for motion control applications and SINAMICS drives are the driving force for SINUMERIK CNCs, which sets the standard for maximum precision and speed.

Drives

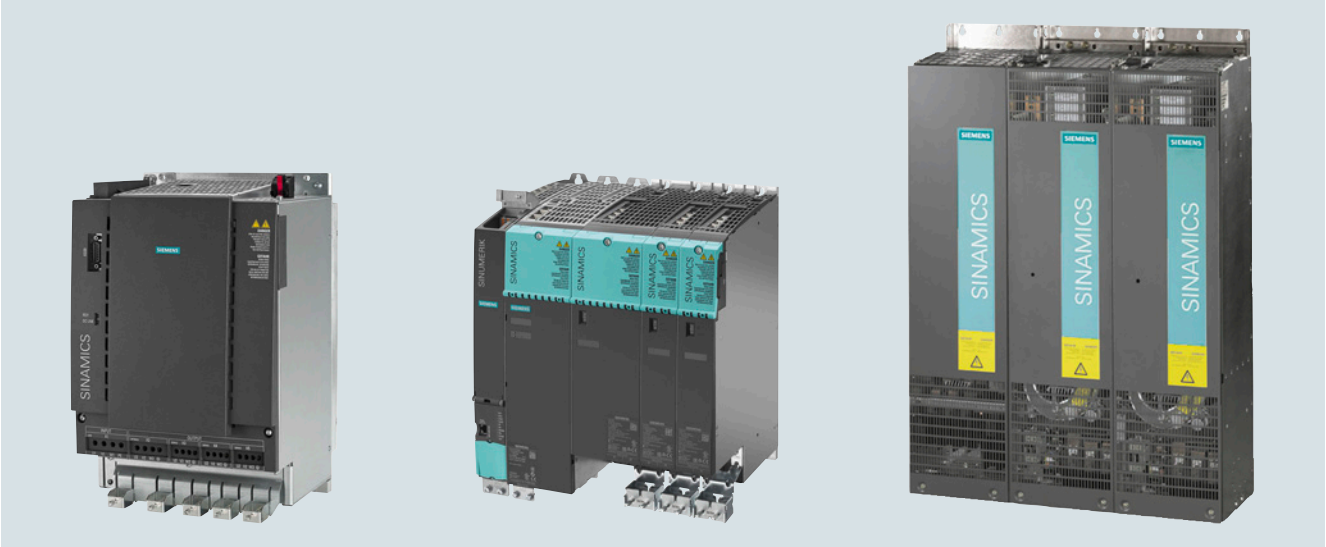

SINAMICS S120 Combi, SINAMICS S120 Booksize and SINAMICS S120 Chassis

SINAMICS S120 – providing the highest degree of flexibility

SINAMICS S120 is synonymous with performance and flexibility when it comes to equipping machine tools. In addition to a wide range of Motor Modules, various infeed options are available with functions such as energy recovery and controlled DC link. This ensures the shortest spindle acceleration times and facilitates perfect reactive power compensation for the complete machine (cos φ = 1). The SINAMICS S120 allows the power unit and control module to be mounted separately, which means that this drive system can be perfectly adapted to address the widest range of drive applications.

SINAMICS S120 Combi – the ideal drive for compact machines

SINAMICS S120 Combi combines the performance of the modular SINAMICS S120 in a compact, rugged design. An infeed and up to four Motor Modules are integrated into a single enclosure. This drive is the ideal basis for equipping compact standard machine concepts with a spindle power up to 15 kW and up to five feed axes.

SINAMICS S120 Booksize – minimal footprint for the control cabinet

The new SINAMICS S120 Booksize devices have a 300 percent overload capability and combine compactness with power density. The width can be reduced for applications that are dimensioned for maximum current with high acceleration levels – or for positioning axes demanding a high dynamic performance. The height required in a control cabinet has also been reduced as a result of a new motor connection/shield concept for the module.

SINAMICS S120 Chassis

The SINAMICS S120 converter built-in units in chassis design represent an extension of the range for large power ratings up to 300 kW and currents up to 490 A and enable perfect adaptation of the SINAMICS S120 drive system to the highest power demand.

© Siemens 2022

Design

SIMOTICS Motion Control motors

SINUMERIK control systems, in conjunction with SINAMICS drives and SIMOTICS motors, are optimally designed to address the requirements of machine tools. The complete SINAMICS drives family addresses all of the performance levels and sets itself apart as a result of the highest degree of flexibility, functionality and efficiency. SIMOTICS motors for motion control applications and SINAMICS drives are the driving force for SINUMERIK CNCs, which sets the standard for maximum precision and speed.

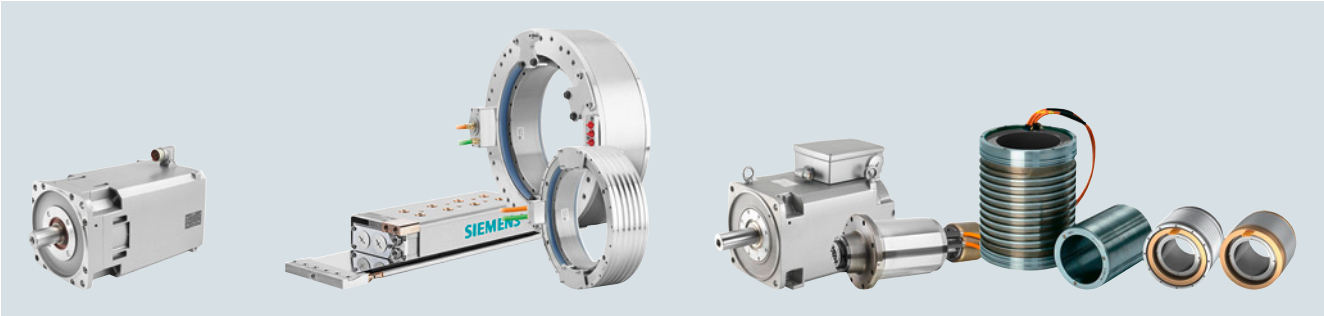

SIMOTICS servomotors, SIMOTICS linear and torque motors, SIMOTICS main spindle motors

SIMOTICS servomotors

A high stall torque, high encoder accuracy and smooth running characteristics make SIMOTICS servomotors the optimum feed drive for machine tools.

SIMOTICS S-1FL6 motors with enclosure and connectors in compliance with military standards (MIL standards) represent the highest degree of ruggedness when it comes to price-sensitive entry level machines.

SIMOTICS S-1FK7 motors are synonymous with flexibility when it comes to equipping machine tools, and are available with various rated speeds, encoder types and moments of inertia.

SIMOTICS S-1FT7 motors offer the highest performance with 400 percent overload capability, available in self-ventilated, force-ventilated and water-cooled cooling methods.

The servomotor portfolio has been expanded to include compact SIMOTICS S-1FG1 servo-geared motors.

SIMOTICS linear and torque motors

Going beyond conventional rotary motor principles, the SIMOTICS range also encompasses linear and torque motors with a high dynamic performance.

SIMOTICS L-1FN3 linear motors eliminate elasticity, backlash and friction characteristics as well as mechanical transmission elements in the machine drive train almost completely and thus achieve maximum precision.
Furthermore, the SIMOTICS T-1FW6 built-in torque motors not only enable highly dynamic positioning tables but also rotary and swivel tables for precise 5-axis machining as well as completely new fields of technology such as turning on milling machines.

SIMOTICS main spindle motors

An outstanding portfolio has been obtained by teaming-up the expertise in spindle design and construction of the Weiss Spindeltechnologie GmbH company with Siemens' long tradition of building electric motors. It supports all types of spindle solutions – from classic mechanical spindles with SIMOTICS M-1PH8 and SIMOTICS M-1PH1 mounted spindle motors, through both SIMOTICS M-1FE1/1FE2 synchronous built-in spindle motors and SIMOTICS M-1PH2 asynchronous built-in spindle motors, all the way to hybrid and high-performance 2SP1 motor spindles.

© Siemens 2022

Overview

Solutions for every industry that are fit for the future

Each industry has its own individual requirements. Whether standardized automation concepts for the automotive industry, or holistic solution approaches across all phases of the product and production lifecycle for aerospace. As a long-time partner of the machine tool industry, Siemens provides machine tool systems with industry solutions that are used worldwide.

Impressive years of industry expertise

Thanks to our experience and the acquired industry expertise, we always offer the right solution for cost-effective component manufacturing in the automotive and aerospace, power generation and electronics segments.

Your partner, from machine tool to complete factory automation

From our many decades of direct contact with end users in key industries, we know what requirements are put on the current generation and future generations of machines. This knowledge flows directly back into product development and ensures that the SINUMERIK controls are closely aligned to address market requirements. As an all-in-one provider, we can also take over the factory automation of entire plants in addition to simple automation of the machine tools. Customer benefits: Integrated automation solutions from a single source for highly productive manufacturing.

Setting trends in manufacturing

Siemens Machine Tool Systems is considered an innovation leader in the machine tool world. The development of innovative, cutting-edge solutions is a matter of course for us. Our digitalization solutions ensure maximum productivity, flexibility, and availability.

www.siemens.com/machinetools

Leverage the bandwidth of machining technologies

With SINUMERIK, every manufacturing environment is optimally equipped to address technological challenges – now and in the future. SINUMERIK is powerful when it comes to turning, milling, grinding, nibbling, laser machining and gear wheel machining. In addition to this, it is open for new technological concepts, such as multitasking, additive manufacturing, or composite machining.

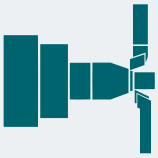

Turning

Maximum precision and productivity, from cycle controlled and standard CNC turning and milling on the turning machine up to multi-channel and multitasking machining.

Milling

Optimized milling with SINUMERIK MDynamics, Advanced Surface, Top Surface and Collision Avoidance. From 3-axis milling and 5-axis simultaneous machining to multitasking machining.

Multitasking

Whether series production or workshop operations – multitasking machining is supported system-wide with SINUMERIK Operate. For efficient and highly productive CNC machining.

Nibbling, lasering, water jet machining, plasma machining

The system openness of the SINUMERIK provides solutions beyond the standard technologies for nibbling, lasering, water jet cutting and plasma machining.

Composite machining

When machining composite materials, the quality of the end product is crucial. Depending on the material, manufacturing methods such as lasering, milling or grinding are used. These can be flexibly controlled using SINUMERIK.

Additive manufacturing

In additive processes such as material extrusion or laser cladding, the 5-axis technology of the SINUMERIK 840D sl in combination with the SINAMICS S120 drive system and SIMOTICS motors allows exact and dynamic motion control.

Grinding

New form-truing or re-form-truing with the SINUMERIK option 'Paraxial form-truing' increases the productivity of the grinding machine and saves time when form-truing. Cylinder error compensation compensates chucking errors and torsions in the clamping point.

Gear machining

Machining gears is a complex process that requires maximum precision. SINUMERIK controls come into their own during gear wheel rotation, interlocking with hobs and the subsequent chamfering of the component.

Automated cell

Robots must be easy to integrate into machine tools and production processes. SINUMERIK Run MyRobot offers solutions ranging from simple connecting and user-friendly integration for handling tasks to high-precision motion control of machines with robot kinematics.

© Siemens 2022

Overview

On track to achieve higher productivity with CNC Shopfloor Management Software

Through digitalization, machine manufacturers and companies operating machines can respond more flexibly to market demands – and at the same time boost their productivity. CNC Shopfloor Management Software specifically addresses the requirements in the machine tool domain. It facilitates the management, analysis and optimization of machine tools – independent of the manufacturer of the control system being used.

More productivity in engineering

Fast and flexible, from idea to machine

Mechanical engineering has two objectives: On the one hand, increased efficiency and flexibility in development, through consistent virtualization in the development process, for example. And on the other, provision of supplementary offers for digitalization in the customer's production, all the way to new business models.

Higher productivity in production

Optimizing production performance

Machine tools are intelligently integrated in manufacturing processes. The precondition is networking of job planning and production and between machines on the SINUMERIK Integrate platform. This permits error-free transfer of programs and data.

Digital twins – the virtual copy

Production planning can be shifted from the machine to the PC by virtually emulating machines and SINUMERIK controls. Programming and setup operations become virtual when using a digital twin – increasing the productivity of real machines.

CNC Shopfloor Management Software – Ecosystem

With the three levels **In Cloud**, **In Line** and **In Machine**, a leading-edge IT architecture was created using CNC Shopfloor Management Software. These levels correspond to the MindSphere, SINUMERIK Integrate and SINUMERIK/SINUMERIK Edge platforms, with their numerous tailored functions from the field to the cloud.

On top of this, you have new business model options, in the service sector for example. With digitalization, previously unknown optimization potential can be tapped to sustainably enhance productivity and competitiveness.

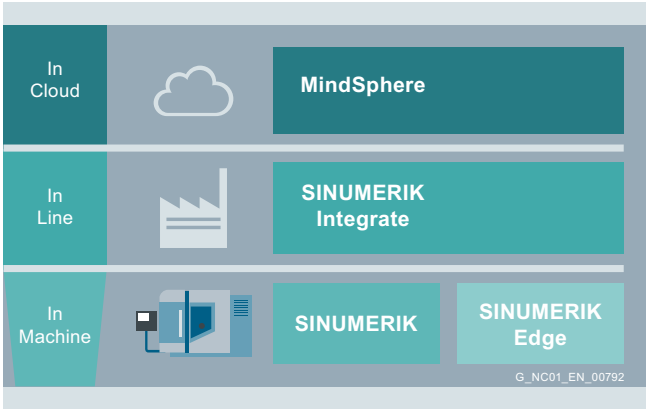

© Siemens 2022

Overview

Digitalization with cloud-based applications – optimally networked

Cloud-based applications provide all the advantages of working on a shared database. Intelligent tools network the cross-site design, work preparation, and machine tools to form seamless production processes with maximum effectiveness. Production and machines are continuously analyzed. The acquired data is evaluated and creates transparency. This makes it possible to detect and utilize previously unrecognized optimization potential.

Manage MyMachines – more transparency and an ideal starting-point for new business models in the digital enterprise

Current machine and production data from across the entire machine park at a glance. Generate displays for visualization and analysis via the web. Transparent and efficient operation of machine tools. All this becomes possible with Manage MyMachines – an application for MindSphere, the cloud-based, open IoT operating system from Siemens. The MindApp collects data centrally in the cloud and can give individual status overviews of machine tools at any time.

SINUMERIK Integrate platform – numerous applications for optimizing availability and productivity

The advantages of the digital world can be used even without a cloud connection. There are a large number of applications available on the SINUMERIK Integrate platform, including Performance Monitoring, which provides functions adapted to engineering and production.

SINUMERIK Edge – process analysis and optimization with real-time data

SINUMERIK Edge is a robust and powerful hardware and software solution for use at the machine (edge computing). It allows high-frequency process data to be processed and analyzed in real-time in the field. Tailored EdgeApps can be used to monitor and optimize processes, for example.

© Siemens 2022

Overview

Always achieve the maximum CNC performance

Productivity, precision, availability, costs – these are the decisive driving factors in the machine tool market. Packed with special functions, SINUMERIK controls precisely satisfy these requirements – for a high level of CNC performance.

Wide-ranging possibilities to achieve high productivity

Robot integration, intelligent motion control as well as continuous optimization are the relevant buzz words when it comes to leveraging the wide-ranging possibilities of boosting productivity.

- **All facets of robot integration**
  The demand for automation solutions for machine tools teamed up with high precision industrial robots is increasing at a rapid pace. This applies equally to handling – as well as high-precision and complex machining tasks.
  With SINUMERIK, Siemens has a CNC system for robot integration: From a simple connection via the user-friendly integration for handling tasks – up to the complete integration of robot kinematics in a system.
- **Intelligent motion control**
  SINUMERIK provides an optimal workpiece surface at maximum milling speed with the intelligent Advanced Surface and Top Surface motion control features.
- **Continuous optimization**
  Maximum dynamic performance and precision of machine axes are achieved using the Auto Servo Tuning (AST) functionality of SINUMERIK Operate, which allows control parameters to be automatically optimized. This simplifies commissioning the machine, and in operation, the machine can be regularly optimized using AST. This ensures maximum machine precision over the entire lifecycle.

Precision in production

One way the SINUMERIK precision is achieved is due to the compensation of mechanical effects via the software. This includes functions such as 80-bit NANO, friction compensation and nodding compensation.

- **Accuracy**
  SINUMERIK CNCs and SINAMICS drives perform calculations with powerful 80-bit NANO accuracy. This eliminates rounding errors and provides extremely high internal computing accuracy in the entire control chain.
- **Nodding compensation**
  Nodding compensation is used to compensate dynamic position deviations due to acceleration operations in machine axes. As a result, improved machining quality with simultaneously higher jerk and acceleration values is achieved.
- **Friction compensation**
  Friction-related path errors are even more effectively eliminated by compensating the effects of friction as a function of the velocity. This allows a consistently high contour accuracy and workpiece precision to be achieved.
- **Volumetric compensation (VCS)**
  VCS enables compensation of geometric deviations of linear as well as rotary axes in their effect on the tool center point. Higher machining accuracy is the direct consequence.

Increasing availability

Condition monitoring and collision avoidance ensure high availability of the machine tool.

- **Collision Avoidance**
  Provides optimum collision protection: Collision Avoidance in SINUMERIK offers 3D collision monitoring in real time – for 1-channel machines with one NCU – and also for complex machining operations such as 5-axis simultaneous milling. Collision detection is available in all operating modes (JOG, MDI and Automatic). The motion of machine elements with respect to one another and the tool is visualized in 3D in SINUMERIK Operate.
- **Condition monitoring**
  With SINUMERIK condition monitoring, information about the machine condition is evaluated and the status acquired using machine fingerprints. The direct result is a valid statement about the machine quality and possible hidden deficiencies.

Lower operating costs

Operating costs can be reduced using energy-efficient solutions over the entire life cycle of the machine.

- **SINUMERIK Ctrl-Energy**
  SINUMERIK Ctrl-Energy covers a wide range of highly efficient drive/motor components, CNC/drive functions, software solutions, and services. For example, the user has access to intelligent functions that allow analysis of the energy costs for each workpiece. Pressing the Ctrl+E shortcut helps the SINUMERIK to save energy in the long term.

Increasing security

Safeguarding intellectual property in the program code and protection against manipulation by malware are two important aspects in the system integrity of SINUMERIK.

- **Know-how protection**
  The SINUMERIK function Lock MyCycles is used to store user cycles in the control as protected data. The SIMATIC STEP 7 program blocks are also protected by a password, thus ensuring confidentiality of user know-how.
- **Security**
  PC-based systems and the control level must be protected against cyber attacks. The use of antivirus and whitelisting software provides manipulation protection and prevents malware from affecting PC-based systems.

© Siemens 2022

Overview

Motion Control Services – digitalization of machine tools and optimization of production

Motion Control Services provide support to dealers or machine operators over the complete lifecycle of production systems – for drives, motors, or controls. The focus is on increasing transparency in order to facilitate more efficient, productive and versatile use of resources and machines and to ultimately increase the machine's availability.

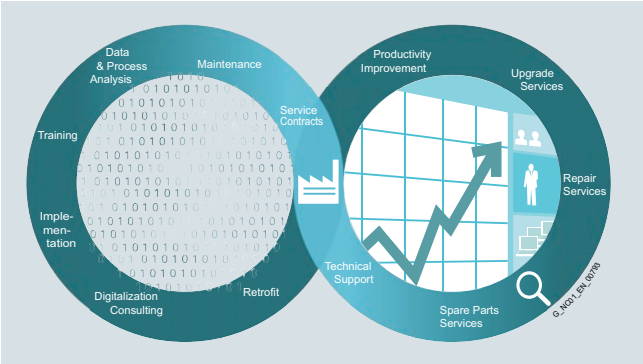

Digital services – the path to digital production

Based on the CNC Shopfloor Management Software, Manufacturing IT Services partly or fully digitize the mechanical production process. We offer a complete solution from a single source, from the requirements analysis and installation with subsequent customer training all the way to operating and maintaining the system.

Digital Transformation Awareness and Consulting

Consulting portfolio on digital transformation with a pre-analysis of the company and agreement of the details for the actual workshop. Digital Transformation Awareness and Consulting CNC is the starting point for defining a customer-specific digitalization roadmap along the value chain.

Digitalization Check for Machine Tools

This service provides support where the digitalization of production is heavily dependent on machine tools.

Integration Services

Support for the necessary connection between field-to-edge and cloud to integrate new software, virtual machines and digital twins into your system. Up to 60 % of the time required for commissioning new machines can be saved.

Digitalization preparation

If individual machines of the "installed base" cannot be integrated into the IT, this service facilitates digital connection of machines through a software update. Depending on the use case, a hardware upgrade or retrofit is also possible.

Brownfield Connectivity Services

Increased transparency within production for complete networking of existing production machines. Connection between the production network and higher-level networks.

Training

Training courses ensure that applications are safely and correctly used and lead to independent extraction of user data and correct derivation of optimization measures.

Data and Process Analysis

The portfolio of classic services derives individual optimization measures on the basis of the collected and analyzed data.

Maintenance

This service ensures that IT systems remain operational, to secure operating time as well as resolve faults in the event of unscheduled downtimes.

Classic services – the foundation for continuous improvement

Service contracts

Matched to needs and economic objectives, service contracts are modular in structure and provide machine users with an individually tailored service concept for reducing machine downtimes.

Technical support

In more than 25 regions worldwide, our competent hotline experts answer any questions about SINUMERIK – at local times and in the national language.

Spare parts & repair services

An extensive, flexible and accommodating spare parts and repair service at more than 150 service locations in more than 70 regions worldwide, for quick replacement at fair prices. For selected components, the long life repair service extends service availability for up to 25 years.

Upgrade services

A component upgrade extends the service life of machines and systems in order to provide long-term investment protection.

Productivity Improvement

Especially when it comes to machine tools that are used intensively with high utilization levels, fully leveraging the machine capacity to its maximum has significant economic benefits. With Productivity Improvement we optimize the production potential for machine tools equipped with SINUMERIK 840D sl or SINUMERIK 840D pl.

Retrofit

If the mechanical parts of a machine tool are still in good condition, but the control system and/or drive technology are no longer leading edge, CNC retrofit measures are usually much more economical than a new investment. Within the scope of our offer, we bring specific individual components up to the current state-of-the -art. Cycle times can be significantly reduced and quality optimized solely through retrofit measures at the control end.

www.siemens.com/motioncontrolservices

© Siemens 2022

Notes

© Siemens 2022

2/2 SINUMERIK 840D sl
2/6 NCU 710.3B PN/NCU 720.3B PN/ NCU 730.3B PN
2/8 Ordering examples
2/9 Numeric Control Extensions NX10.3/NX15.3
2/10 SINUMERIK COM01.3 module
2/11 CBE30-2 communication module

2/12 SINUMERIK I/O devices
2/12 SINUMERIK I/O modules PP 72/48D PN and PP 72/48D 2/2A PN

2/14 SIMATIC I/O devices
2/14 SIMATIC I/O devices for SINUMERIK 840D sl

2/15 Supplementary components
2/15 SITOP power supply

2/16 SINUMERIK Safety Integrated

Part 9 **Drive Technology Configurator selection tool**
Guided product selection through to exact article number.
www.siemens.com/dt-configurator

2/20 Functions
2/20 Information about export Versions with full functional scope/ export versions
2/23 Control structure and configuration
2/27 Drives
2/31 Connectable motors
2/31 Connectable measuring systems
2/32 Drive functions
2/34 Axis functions
2/34 Spindle functions
2/35 Interpolations
2/36 Couplings
2/37 Transformations
2/38 Measuring
2/38 Technologies
2/41 Motion-synchronous actions
2/42 CNC programming language
2/45 Programming support
2/46 Simulations
2/46 Operating modes
2/48 Tools
2/50 Communication and data management
2/51 Operation
2/58 Monitoring functions
2/59 Compensations
2/60 Programmable logic controller PLC
2/61 Safety functions
2/64 Engineering
2/67 Boost productivity

Important ordering information:
The marketing of selected CNC Shopfloor Management Software products will be gradually transferred to Siemens Industry Software. These products can then only be ordered using the corresponding product IDs.
If you need any further information or assistance, please get in touch with your Siemens contact.
www.siemens.com/automation-contact

The most important functions of the **SINUMERIK 840D sl are listed in the function overview.**

This gives you quick and selective access to the individual functions.

The designation E in the name of the SINUMERIK 840DE sl CNC indicates that it is the export version, i.e. the control can be exported with the functions specified in the table.

The information in the function overview of the SINUMERIK controls is based on the following software version:

CNC	Software version
SINUMERIK 840D sl	4.95 SP1

© Siemens 2022

Overview

The SINUMERIK 840D sl CNC offers modularity, openness, flexibility and uniform structures for operation, programming, and visualization. It provides a system platform with trend-setting functions for almost all technologies.

Integrated into the SINAMICS S120 drive system and complemented by the SIMATIC S7-300 automation system, the SINUMERIK 840D sl forms a complete digital system that is ideally suited for the mid to upper performance range.

The SINUMERIK 840D sl is characterized by:

- A high degree of flexibility
- Excellent dynamic response and precision
- Optimum integration into networks

Benefits

- Outstanding performance and flexibility for multi-axis systems of average to high complexity thanks to scalable hardware and software
- Universal openness of the user interface, the PLC and the NCK area to allow integration of your specialist know-how
- Integrated safety functions for man and machine: SINUMERIK Safety Integrated
- Comprehensive range of products for integrating machine tools into communication, engineering and production processes: SINUMERIK Integrate

Application

The SINUMERIK 840D sl can be deployed around the world for the following technologies:

- Turning
- Drilling
- Milling
- Grinding
- Laser machining
- Nibbling
- Punching
- Tool and mold making
- High-speed cutting applications
- Woodworking and glass processing
- Handling
- Transfer lines
- Rotary indexing machines
- Mass production
- JobShop production

The SINUMERIK 840DE sl is available as an export version for use in countries where approval is required.

Design

Matched modular system

The SINUMERIK 840D sl CNC is modular in design, offering outstanding flexibility and openness for any machine application. Entirely in line with the motto "Mix and Match", the components can be perfectly matched to each other - tailored precisely to the requirements of the mechanical engineer and the subsequent operating environment of the machine.

The SINUMERIK 840D sl combines CNC, HMI, PLC, closed-loop control and communication tasks on one SINUMERIK NCU (NCU 710.3B PN/NCU 720.3B PN/NCU 730.3B PN).

For operation, programming and visualization, the corresponding HMI software is already integrated into the CNC software for the NCU and therefore executes on the high-performance NCU multi-processor module. For enhanced operating performance, the SINUMERIK PCU industrial PC (SIMATIC IPC for SINUMERIK) can be used.

Up to 4 distributed SINUMERIK OP operator panels can be operated on one NCU/PCU. The operator panel can be installed as a Thin Client at a distance of up to 100 m.

The high-performance NCU multi-processor module can be installed to the left of the Line Module of the SINAMICS S120 drive system. If necessary, the NCU can be installed separately at a distance of up to 100 m. MOTION-CONNECT DRIVE-CLiQ cables from Siemens are used for the connections. SINUMERIK 840D sl offers integrated PROFINET functionality and supports PROFINET CBA and PROFINET IO.

© Siemens 2022

Function

Performance and flexibility

The scalability of the hardware and software – both in the CNC and the operating area – provides exceptional conditions for using SINUMERIK 840D sl in many sectors. The possibilities range from simple positioning tasks up to complex multi-axis systems. We offer different types of NCU for your machining tasks.

A total of 8 axes is provided by SINUMERIK 840D sl with NCU 710.3B PN, while the number of axes can be increased to a maximum of 31 in combination with the NCU 720.3B PN/ NCU 730.3B PN.

Up to 3 NCUs can be connected with the CBE30-2 communications module via NCU-Link. Thus, up to 93 CNC-controlled axes/spindles and 150 CNC and PLC-controlled axes/spindles can be implemented.

Siemens has bundled its entire milling expertise into the SINUMERIK MDynamics technology packages. which allow users to attain outstanding milling results in terms of perfect surface quality, precision, quality and speed:

- Powerful CNC hardware and intelligent CNC functions
- Simple operation
- Unique CAD/CAM/CNC process chain
- Technological expertise in all industries

Use of an NCU 720.3B PN or NCU 730.3B PN is recommended where excellent dynamic response and accuracy are required for mold making applications or in the high-speed cutting (HSC) range.

	Notes	SINUMERIK 840DE sl/840D sl		
		NCU 710.3B PN	**NCU 720.3B PN**	**NCU 730.3B PN**
Axes/spindles, maximum configuration:	Option			
• CNC-controlled		8	31	31
• CNC and PLC-controlled		15	40	50
• PLC-controlled	Less the CNC-controlled axes/spindles	7 ... 15	9 ... 40	19 ... 50
Mode groups, maximum configuration	Option	4	10	10
Machining channels, maximum configuration	Option	4	10	10
Axes/spindles per channel, maximum configuration	Option	8	20	20
Interpolating axes, maximum configuration	Option: Multi-axis interpolation	8	20	20
CNC user memory:				
• Basic version		10 MB	10 MB	10 MB
• Maximum configuration	Option	16 MB	22 MB	22 MB
Block change times (block processing times), typical	Requirement: Use of the compressor	1.2 ms	0.5 ms	0.3 ms
DRIVE-CLiQ interfaces		4	6	6
SINAMICS NX10.3/NX15.3 modules, maximum configuration	NX10.3: up to 3 axes NX15.3: up to 6 axes	2 2	5 5	5 5

© Siemens 2022

Function

System-wide openness

Thanks to openness across the HMI, CNC and PLC, users can apply their specific expertise such that they achieve exactly the individual control solution desired. SINUMERIK 840D sl offers openness right down to the NCK level. This open architecture and the high computing performance of the SINUMERIK 840D sl mean that the CNC functions can be adapted to many different innovative machine kinematics flexibly, rapidly and cost-effectively. Additional technology-specific functions can be subsequently loaded as compile cycles.

PROFINET functionality

PROFINET is the leading Industrial Ethernet Standard. PROFINET is based on tried and tested IT standards and fully supports TCP/IP – for company-wide data transfer across all levels. It also offers integrated diagnostics and fail-safe communication to ensure maximum plant availability, modular machine concepts for outstanding flexibility, as well as very fast transfer rates and WLAN applications for significantly enhanced performance.

PROFINET IO is a communication concept for the implementation of modular, distributed applications. PROFINET IO is based on Industrial Ethernet and allows distributed field devices and I/O devices to be connected to the NCU. 128 PROFINET IO devices can be operated as IO Controllers.

The integrated PROFINET CBA (Component Based Automation) functionality for machine-to-machine communication allows users to modularize technologically machines and systems on a process-specific basis and benefit accordingly: Systems are easier to standardize and easier to reuse or extend. Response to customer demands is faster and more flexible and startup is simplified and speeded up by pretesting at component level.

Integrated safety functions

Integrated safety functions (SINUMERIK Safety Integrated) are available with SINUMERIK 840D sl. The safety functions comply with the requirements of Category 3 as well as Performance Level PL d according to EN ISO 13849-1 and Safety Integrity Level SIL 2 according to EN 61508. Consequently, highly effective protection for personnel and machines is achieved in a simple, economical and practical manner.

Integration

The following components can be connected to the SINUMERIK 840D sl:

- SINUMERIK operator panel front with TCU
- SINUMERIK PCU (SIMATIC IPC for SINUMERIK)
- SINUMERIK Machine Control Panels MCP and Machine Pushbutton Panels MPP
- SIMATIC Comfort Panels, SIMATIC Mobile Panels and SIMATIC Thin Client Panels
- SINUMERIK handheld units
- Distributed PLC I/O via PROFIBUS DP or PROFINET IO
- SINUMERIK PP 72/48D PN and PP 72/48D 2/2A PN I/O modules
- SINAMICS S120/S120 Combi drive systems
- SIMOTICS feed and main spindle motors
- Probe systems
  (The use of high-precision probes such as those from RENISHAW's RENGAGE range is recommended)

© Siemens 2022

Integration

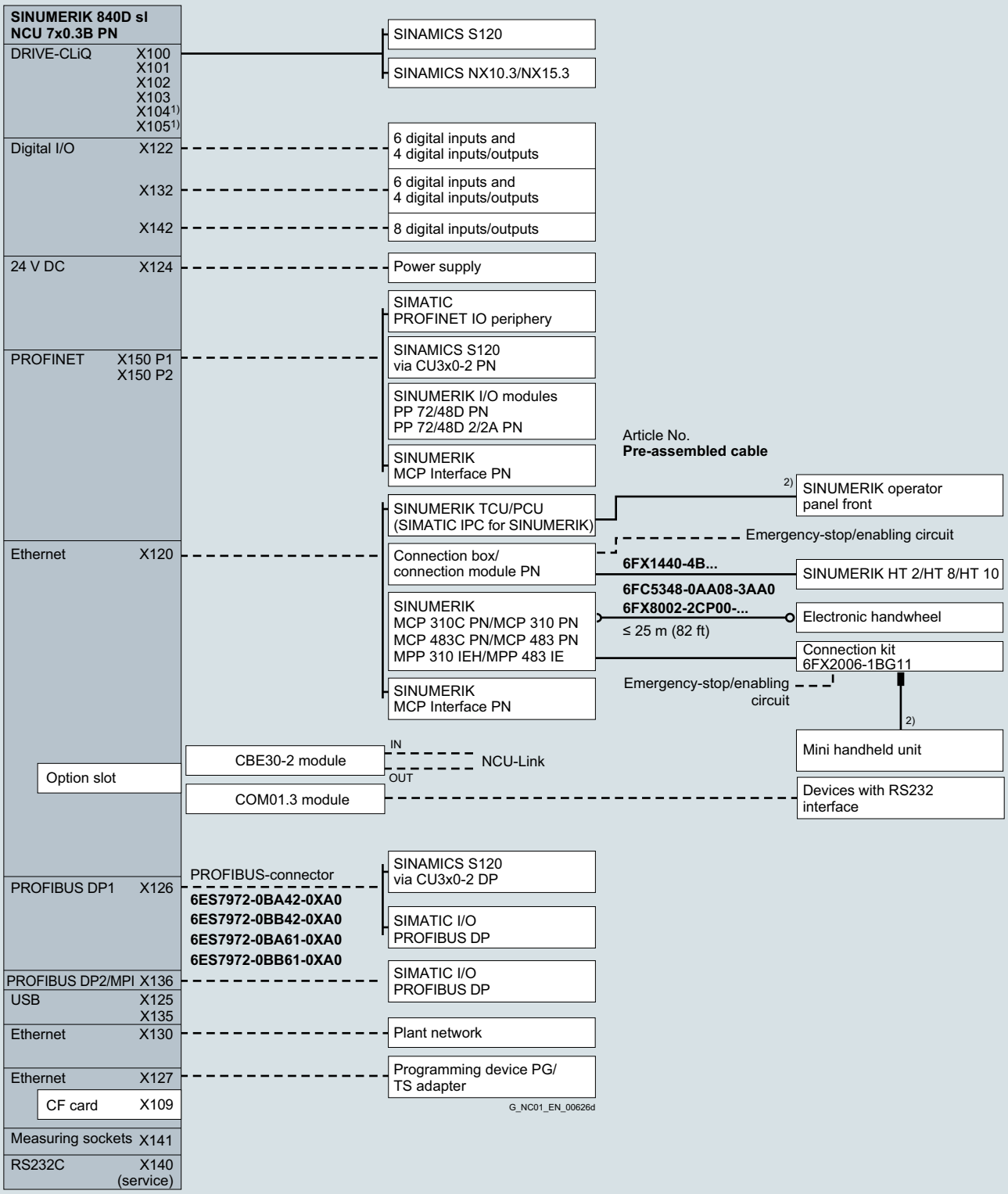

1) Not for NCU 710.3B PN.
2) Cable included in the scope of supply.

Connection overview for SINUMERIK 840D sl NCU710.3B PN/NCU720.3B PN/NCU730.3B PN

For information on the cables and length codes, refer to section MOTION-CONNECT connection systems.

© Siemens 2022

Overview

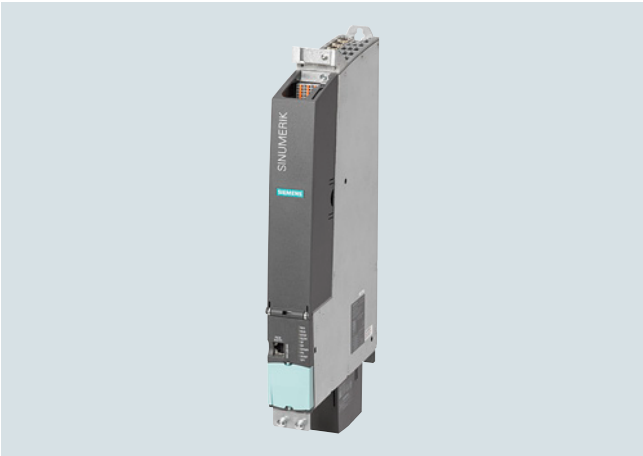

NCU 710.3B PN

The NCU 710.3B PN represents the first configuration level of the SINUMERIK 840D sl.

NCU 720.3B PN

The NCU 720.3B PN represents the medium configuration level of the SINUMERIK 840D sl.

NCU 730.3B PN

The NCU 730.3B PN is the flagship of the SINUMERIK 840D sl, representing the highest configuration level within the SINUMERIK 840D sl.

Technical specifications

Article number		6FC5371-0AA30-0AB0	6FC5372-0AA30-0AB0	6FC5373-0AA30-0AB0
Product brand name		SINUMERIK	SINUMERIK	SINUMERIK
Product type designation		840D sl	840D sl	840D sl
Product short term		NCU 710.3B PN	NCU 720.3B PN	NCU 730.3B PN
Product designation		CNC control	CNC control	CNC control
Type of PLC as SIMATIC S7 Integrated		PLC 317-3 PN/DP	PLC 317-3 PN/DP	PLC 317-3 PN/DP
Storage capacity of main memory 1	Gbyte	2	2	2
• Type of main memory 1		DRAM	DRAM	DRAM
Storage capacity of main memory 2	Mbyte	1	1	1
• Type of main memory 2		NVM	NVM	NVM
Supply voltage at DC rated value	V	24	24	24
Active power consumption maximum	W	281	352	352
Power loss, typ.	W	21	24	24
Degree of protection		IP20 / UL open type	IP20 / UL open type	IP20 / UL open type
• note		IPXXB with cover for option slot	IPXXB with cover for option slot	IPXXB with cover for option slot
Environmental category acc. to IEC 60721-3-3		Condensation and icing excluded. Low air temperature 0 °C (32 °F).	Condensation and icing excluded. Low air temperature 0 °C (32 °F).	Condensation and icing excluded. Low air temperature 0 °C (32 °F).
Relative humidity at 25 °C (77 °F), during				
• storage	%	5 ... 95	5 ... 95	5 ... 95
• transport	%	5 ... 95	5 ... 95	5 ... 95
• operation	%	5 ... 95	5 ... 95	5 ... 95
Ambient temperature, during				
• storage	°C (°F)	-25 ... +55 (-13 ... +131)	-25 ... +55 (-13 ... +131)	-25 ... +55 (-13 ... +131)
• transport	°C (°F)	-40 ... +70 (-40 ... +158)	-40 ... +70 (-40 ... +158)	-40 ... +70 (-40 ... +158)
• operation	°C (°F)	0 ... 55 (32 ... 131)	0 ... 55 (32 ... 131)	0 ... 55 (32 ... 131)
Width	mm (in)	50 (1.9685)	50 (1.9685)	50 (1.9685)
Height	mm (in)	455 (17.91339)	455 (17.91339)	455 (17.91339)
Depth	mm (in)	272 (10.70866)	272 (10.70866)	272 (10.70866)
Net weight	kg (lb)	3.7 (8.1571)	3.9 (8.59803)	3.9 (8.59803)
Certificate of suitability		CE, cULus	CE, cULus	CE, cULus

© Siemens 2022

Selection and ordering data

Description	Article No.
Hardware	
SINUMERIK NCU 710.3B PN With integrated PLC 317-3 PN/DP	**6FC5371-0AA30-0AB0**
SINUMERIK NCU 720.3B PN With integrated PLC 317-3 PN/DP	**6FC5372-0AA30-0AB0**
SINUMERIK NCU 730.3B PN With integrated PLC 317-3 PN/DP	**6FC5373-0AA30-0AB0**
SINAMICS Numeric Control Extension NX10.3 Expansion of automatic speed control for SINUMERIK 840D sl up to 3 axes	**6SL3040-1NC00-0AA0**
SINAMICS Numeric Control Extension NX15.3 Expansion of automatic speed control for SINUMERIK 840D sl up to 6 axes	**6SL3040-1NB00-0AA0**
SINUMERIK CNC user memory Expansion by increments of 2 MB	**6FC5800-0AD00-0YB0**
SINUMERIK PLC user memory Expansion by increments of 128 KB	**6FC5800-0AD10-0YB0**
Software	
SINUMERIK HMI user memory Additionally on CompactFlash card of NCU Software option • Single license without data storage medium	**6FC5800-0AP12-0YB0**
Accessories	
Spacers For NCU 710.3B PN/NCU 720.3B PN/ NCU 730.3B PN	**6SL3064-1BB00-0AA0**
Blanking cover For NCU 710.3B PN/NCU 720.3B PN/ NCU 730.3B PN	**6SL3064-3BB00-0AA0**
Front cover For NCU 710.3B PN/NCU 720.3B PN/ NCU 730.3B PN	**6FC5348-0AA30-0AA0**
PROFIBUS RS485 bus connector With angular cable outlet (35°) and screw-type terminals maximum transmission rate 12 Mbps	
• Without programming device interface	**6ES7972-0BA42-0XA0**
• With programming device interface	**6ES7972-0BB42-0XA0**
PROFIBUS RS485 bus connector With angular cable outlet (35°) and insulation displacement method FastConnect maximum transmission rate 12 Mbps	
• Without programming device interface	**6ES7972-0BA61-0XA0**
• With programming device interface	**6ES7972-0BB61-0XA0**

Description	Article No.
Software	
SINUMERIK CNC software 31-3 with SINUMERIK Operate for NCU On CompactFlash Card Languages: Chinese Simplified, English, French, German, Italian, Spanish	
SINUMERIK 840DE sl Export:	
• Software version 4.95 SP1 with single license	**6FC5851-1YG47-1YA0**
• Software version 4.95 SP1 without single license	**6FC5851-1YG47-1YA8**
• Single license without data storage medium	**6FC5851-1YF00-0YB0**
SINUMERIK 840D sl Standard:	
• Software version 4.95 SP1 with single license	**6FC5851-1XG47-1YA0**
• Software version 4.95 SP1 without single license	**6FC5851-1XG47-1YA8**
• Single license without data storage medium	**6FC5851-1XF00-0YB0**
SINUMERIK CNC software 31-3 with SINUMERIK Operate for NCU On DVD-ROM Languages: Chinese Simplified, English, French, German, Italian, Spanish	
SINUMERIK 840DE sl Export:	
• Software version 4.95 SP1 without single license	**6FC5851-1YC47-1YA8**
• Single license without data storage medium	**6FC5851-1YF00-0YB0**
SINUMERIK 840D sl Standard:	
• Software version 4.95 SP1 without single license	**6FC5851-1XC47-1YA8**
• Single license without data storage medium	**6FC5851-1XF00-0YB0**
Language extensions[1]	**6FC5860-0YC44-0YA8**
On DVD-ROM Without license Languages: Bulgarian, Chinese Traditional, Croatian, Czech, Danish, Dutch, Finnish, Greek, Hindi, Hungarian, Indonesian, Japanese, Korean, Malay, Polish, Portuguese/Brazilian, Romanian, Russian, Swedish, Slovakian, Slovene, Tamil, Thai, Turkish, Vietnamese	
• For SINUMERIK 840D sl Up to software version 4.5 SP2	
• For SINUMERIK Operate operating software Up to software version 2.7	
Additional languages Using additional languages Software option • Single license without data storage medium	**6FC5800-0AN00-0YB0**
SINUMERIK 840D sl Toolbox and Protector • Languages: English, German	Supplied on the DVD-ROM containing the CNC software for NCU.

Software options shown with an order code can be ordered in combination with the CNC software for NCU.

The possible software options are listed in the Overview of functions under Functions.

[1] Please inquire about available software versions.

© Siemens 2022

2

Overview

Ordering examples for SINUMERIK 840DE sl

- CNC software 31-3 with SINUMERIK Operate on CF card
- Travel to fixed stop with Force Control
- 3 × additional axis/spindle
- 1 × additional machining channel

Ordering as a bundle

Order using article no. with order codes
License key included in delivery

Quantity	Order item	Remark
1	Item 1: 6FC5851-1YG47-1YA0-Z M01+A03+C11	SINUMERIK 840DE sl CNC software 31-3 with SINUMERIK Operate for NCU on CF card 6 languages (Chinese Simplified, English, French, German, Italian, Spanish) Export Specific software version 4.95 SP1 Single license Travel to fixed stop with Force Control 3 × additional axis/spindle 1 × additional machining channel
Explanation for Item 1:		
1	6FC5851-1YG47-1YA0	SINUMERIK 840DE sl CNC software 31-3 with SINUMERIK Operate for NCU on CF card 6 languages (Chinese Simplified, English, French, German, Italian, Spanish) Export Specific software version 4.95 SP1 Single license
	-Z	Followed by order codes
	M01	Travel to fixed stop with Force Control
	A03	3 × additional axis/spindle
	C11	1 × additional machining channel

Standard orders:

- Article No. CNC software export on CF card with single license
- Article No. CNC software on CF card with single license

Replacement order, e.g. failure of the CF card:

- Article No. CNC software export on CF card without single license
- Article No. CNC software on CF card without single license

License for customers who always put the CNC software on the CF card themselves:

- Article No. CNC software export single license
- Article No. CNC software single license

Ordering individually

Order using the complete article number
License key obtained over internet

Quantity	Order item	Remark
1	Item 1: 6FC5851-1YG47-1YA0	SINUMERIK 840DE sl CNC software 31-3 with SINUMERIK Operate for NCU on CF card 6 languages (Chinese Simplified, English, French, German, Italian, Spanish) Export Specific software version 4.95 SP1 Single license
1	Item 2: 6FC5800-0AM01-0YB0	Travel to fixed stop with Force Control
3	Item 3: 6FC5800-0AA00-0YB0	3 × additional axis/spindle
1	Item 4: 6FC5800-0AC10-0YB0	1 × additional machining channel

© Siemens 2022

Overview

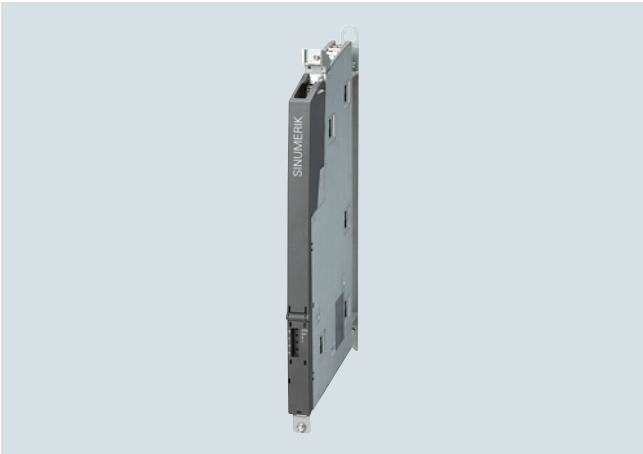

The NX10.3/NX15.3 Numeric Control Extensions are used in the SINUMERIK ONE and SINUMERIK 840D sl systems for applications with large numbers of axes. NX10.3/NX15.3 allow the drive-end computing performance for the SINAMICS drives within the systems to be increased.

The modules have the same design as the SINAMICS S120 components. With a width of only 25 mm, the modules are also ideal for installation in compact machines.

Function

The drive control can be expanded modularly in steps of 3 or 6 additional servo axes by means of Numeric Control Extensions. Each NX10.3 module can control up to three additional servo axes and each NX15.3 module can control up to six additional servo axes.

The SINUMERIK 840D sl CNC handles coordinate transformation, motion control and PLC control for up to 31 axes, whereby the drive control for up to 6 servo axes is already integrated into the respective control system.

Data management for the NX10.3/NX15.3 modules is located exclusively on the CNC, making it much easier to replace modules.

Integration

The following can be operated in an axis grouping with SINUMERIK 840D sl:

- Up to 2 NX10.3/NX15.3 modules on the NCU 710.3B PN
- Up to 5 NX10.3/NX15.3 modules on the NCU 720.3B PN and NCU 730.3B PN

The NX10.3/NX15.3 modules are connected to the SINUMERIK 840D sl via DRIVE-CLiQ cables. This ensures that drive control remains high-performant and clock synchronized. The communications interfaces on both CNCs remain available for other connections.

Technical specifications

Article number		6SL3040-1NC00-0AA0	6SL3040-1NB00-0AA0
Product brand name		SINAMICS	SINAMICS
Product short term		NX10.3	NX15.3
Product designation		Numeric Control Extension	Numeric Control Extension
Number of axes maximum		3	6
Number of digital inputs		6	6
Number of digital inputs/ outputs parameterizable		4	4
Supply voltage at DC rated value	V	24	24
Consumed current typical	A	0.3	0.3
• Note		Ignoring digital outputs and DRIVE-CLiQ supply	Ignoring digital outputs and DRIVE-CLiQ supply
Output current maximum	A	3.35	3.35
Degree of protection		IP20 / UL open type	IP20 / UL open type
Environmental category acc. to IEC 60721-3-3		Condensation and icing excluded. Low air temperature 0 °C (32 °F).	Condensation and icing excluded. Low air temperature 0 °C (32 °F).
Relative humidity at 25 °C (77 °F), during			
• storage	%	5 ... 95	5 ... 95
• transport	%	5 ... 95	5 ... 95
• operation	%	5 ... 95	5 ... 95
Ambient temperature, during			
• storage	°C (°F)	-25 ... +55 (-13 ... +131)	-25 ... +55 (-13 ... +131)
• transport	°C (°F)	-40 ... +70 (-40 ... +158)	-40 ... +70 (-40 ... +158)
• operation	°C (°F)	0 ... 55 (32 ... 131)	0 ... 55 (32 ... 131)
Width	mm (in)	25 (0.98425)	25 (0.98425)
Height	mm (in)	414 (16.29921)	414 (16.29921)
Depth	mm (in)	272 (10.70866)	272 (10.70866)
Net weight	kg (lb)	2.58 (5.68793)	2.58 (5.68793)
Certificate of suitability		CE, cULus	CE, cULus

Selection and ordering data

Description	Article No.
SINAMICS Numeric Control Extension NX10.3 Extension of drive control for SINUMERIK 840D sl up to 3 axes	**6SL3040-1NC00-0AA0**
SINAMICS Numeric Control Extension NX15.3 Extension of drive control for SINUMERIK 840D sl up to 6 axes	**6SL3040-1NB00-0AA0**

© Siemens 2022

Overview

With the SINUMERIK COM01.3 module, an RS232C serial interface is available for the NCU 710.3B PN/NCU 720.3B PN/NCU 730.3B PN. The COM port has been designed in accordance with the ANSI/EIA/TIA-232-F-1997 standard.

Function

The NCU 710.3B PN/NCU 720.3B PN/NCU 730.3B PN can be connected to a master computer, a PC/PG or a modem via the COM interface.

Integration

The COM01.3 module is inserted in the option slot of the SINUMERIK NCUs and can be used for the following CNC:

- SINUMERIK 840D sl
  NCU 710.3B PN/NCU 720.3B PN/NCU 730.3B PN

Technical specifications

Article number	6FC5312-0FA01-1AA0
Product brand name	SINUMERIK
Product short term	COM01.3
Product designation	Interface module
Supply voltage at DC	
• Note	Via NCU 710.3B PN/NCU 720.3B PN/NCU 730.3B PN
Active power consumption maximum	2 W
Degree of protection	IP20 / UL open type
• note	Mounted
Environmental category acc. to IEC 60721-3-3	Condensation and icing excluded. Low air temperature 0 °C (32 °F).
Relative humidity at 25 °C (77 °F), during	
• storage	5 ... 95 %
• transport	5 ... 95 %
• operation	5 ... 95 %
Ambient temperature, during	
• storage	-25 ... +55 °C (-13 ... +131 °F)
• transport	-40 ... +70 °C (-40 ... +158 °F)
• operation	0 ... 55 °C (32 ... 131 °F)
Width	22.5 mm (0.88583 in)
Height	95 mm (3.74016 in)
Depth	130 mm (5.11811 in)
Net weight	65 g (2.29281 oz)
Certificate of suitability	CE, cULus

Selection and ordering data

Description	Article No.
SINUMERIK COM01.3 module Serial RS232C interface for SINUMERIK 840D sl with NCU 710.3B PN/NCU 720.3B PN/NCU 730.3B PN	**6FC5312-0FA01-1AA0**

© Siemens 2022

Overview

The CBE30-2 communications module for NCU-Link can be used to set up NCU link communication between a number of SINUMERIK NCUs on the basis of the generally approved standard configuration.

Benefits

- Using the CBE30-2 communications module, it is possible to implement machines with more than 31 axes via NCU-Link
- Direct linking in the interpolation cycle means that NCUs can exchange data quickly
- Subordination of a physical axis to several different NCUs
- Cross-NCU interpolation
- An increase in the number of usable axes for an NCU grouping
- An increase in the number of channels for an NCU grouping

Design

- 100 Mbps full-duplex/autocrossing
- Integrated 4-port switch with four RJ45 sockets based on PROFINET IO
- Hardwiring for NCU-Link via port 1 (in) and port 2 (out)

Function

To support isochronous Ethernet communication for linking up to three NCUs (NCU-Link).

Integration

The CBE30-2 communications module is inserted in the option slot of the SINUMERIK NCUs and can be used for the following CNC:

- SINUMERIK 840D sl
  NCU 710.3B PN/NCU 720.3B PN/NCU 730.3B PN

Technical specifications

Article number	6FC5312-0FA00-2AA0
Product brand name	SINUMERIK
Product short term	CBE30-2
Product designation	Communication module
Supply voltage at DC	24 V
Consumed current maximum	0.25 A
Degree of protection	IP20 / UL open type
• note	Mounted
Environmental category acc. to IEC 60721-3-3	Condensation and icing excluded. Low air temperature 0 °C (32 °F).
Relative humidity at 25 °C (77 °F), during	
• storage	5 ... 95 %
• transport	5 ... 95 %
• operation	5 ... 95 %
Ambient temperature, during	
• storage	-25 ... +55 °C (-13 ... +131 °F)
• transport	-40 ... +70 °C (-40 ... +158 °F)
• operation	0 ... 55 °C (32 ... 131 °F)
Width	25 mm (0.98425 in)
Height	95 mm (3.74016 in)
Depth	143 mm (5.62992 in)
Net weight	100 g (3.5274 oz)
Certificate of suitability	CE, cULus

Selection and ordering data

Description	Article No.
SINUMERIK/SIMOTION CBE30-2 communication module For connecting SINUMERIK NCU 710.3B PN/ NCU 720.3B PN/NCU 730.3B PN as NCU-Link and for connecting SIMOTION D4x5-2 DP/PN to PROFINET IO	**6FC5312-0FA00-2AA0**

More information

You will find more information about FastConnect RJ45 connectors and Industrial Ethernet cables in the Siemens Industry Mall:

www.siemens.com/industrymall

© Siemens 2022

Overview

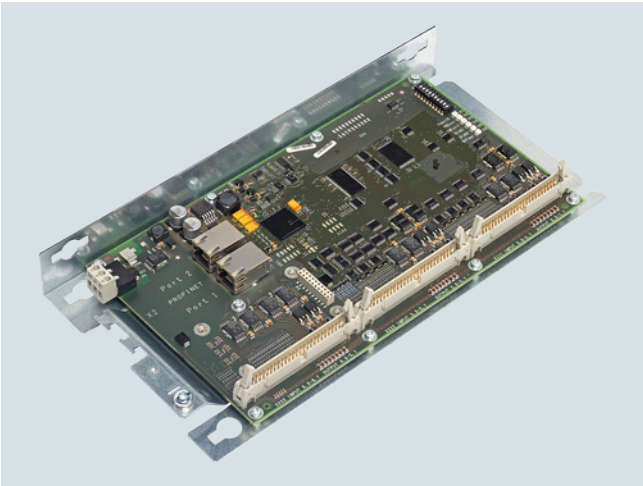

SINUMERIK PP 72/48D PN I/O module

The SINUMERIK PP 72/48D PN I/O module is available in a digital variant with 72 inputs and 48 outputs, and in a digital/analog variant PP 72/48D 2/2A PN with additional 2 analog inputs and 2 analog outputs.

The I/O modules are connected to the CNC via a PROFINET-based I/O interface. The digital inputs and outputs are connected by means of three 50-pin ribbon cables. Terminal strip converters can be used or the direct connection of distribution boards, for example, is possible.

Benefits

- Easy connection via PROFINET-based I/O interface
- Mounting plate for easy module installation in the control cabinet
- Automatic module detection by the CNC, no complex configuring required
- Easy connection of terminal strip converters to plug connectors
- Integrated 24 V DC power supply with electrical isolation between the inputs and outputs and PROFINET

Integration

The SINUMERIK PP 72/48D PN and PP 72/48D 2/2A PN I/O modules can be used for the SINUMERIK 840D sl CNC.

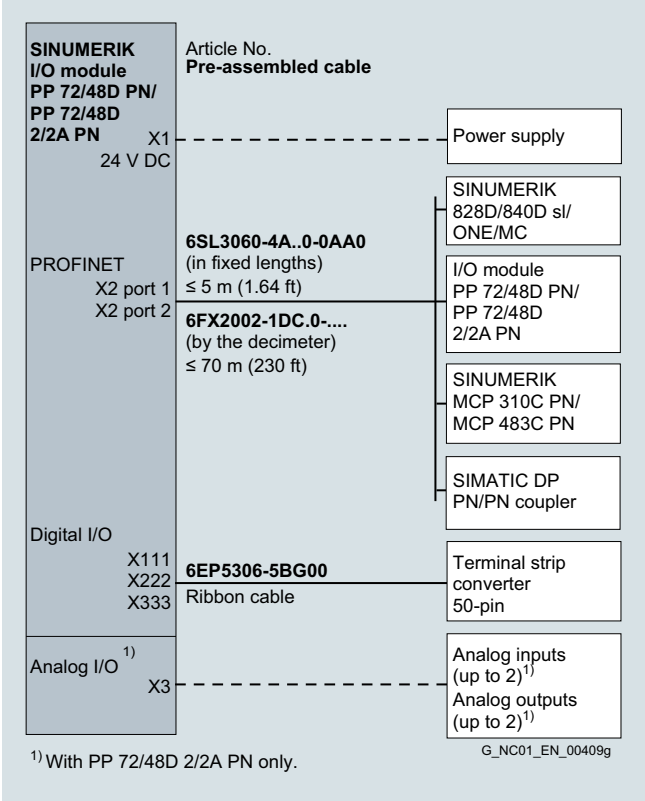

Connection overview for SINUMERIK I/O modules PP 72/48D PN and PP 72/48D 2/2A PN

For information on the cables and length codes, refer to section MOTION-CONNECT connection systems.

© Siemens 2022

Technical specifications

Article number		6FC5311-0AA00-0AA0	6FC5311-0AA00-1AA0
Product brand name		SINUMERIK	SINUMERIK
Product short term		PP 72/48D PN	PP 72/48D 2/2A PN
Product designation		I/O module	I/O module
Supply voltage at DC	V	24	24
Active power consumption maximum	W	17	19
• Note		-	Without digital outputs
Number of digital inputs		72	72
Number of digital outputs		48	48
Number of analog inputs		-	2
Number of analog outputs		-	2
Degree of protection		IP00	IP00
Environmental category acc. to IEC 60721-3-3		Condensation and icing excluded. Low air temperature 0 °C (32 °F).	Condensation and icing excluded. Low air temperature 0 °C (32 °F).
Relative humidity at 25 °C (77 °F), during			
• storage	%	5 ... 95	5 ... 95
• transport	%	5 ... 95	5 ... 95
• operation	%	5 ... 95	5 ... 95
Ambient temperature, during			
• storage	°C (°F)	-40 ... +70 (-40 ... +158)	-40 ... +70 (-40 ... +158)
• transport	°C (°F)	-40 ... +70 (-40 ... +158)	-40 ... +70 (-40 ... +158)
• operation	°C (°F)	0 ... 55 (32 ... 131)	0 ... 55 (32 ... 131)
Width	mm (in)	150 (5.90551)	150 (5.90551)
Height	mm (in)	300 (11.81102)	300 (11.81102)
Depth	mm (in)	35 (1.37795)	35 (1.37795)
Net weight	kg (lb)	0.9 (1.98416)	0.9 (1.98416)
Certificate of suitability		CE, cULus	CE, cULus

Selection and ordering data

Description	Article No.
SINUMERIK **PP 72/48D PN I/O module** 72 digital inputs and 48 digital outputs	**6FC5311-0AA00-0AA0**
SINUMERIK **PP 72/48D 2/2A PN I/O module** 72 digital inputs and 48 digital outputs 2 analog inputs and 2 analog outputs	**6FC5311-0AA00-1AA0**

Description	Article No.
Accessories	
Terminal strip converter For 1-to-1-connection of ID connector to screw terminals 50-pin	**6EP5406-5AA00**
Cable set for self-assembly Ribbon cable, 50-pin length 6 m (19.7 ft) with 8 insulation displacement connectors, 50-pin and strain relief clamp	**6EP5306-5BG00**
DRIVE-CLiQ signal cable, pre-assembled For PROFINET connection	
• In fixed lengths[1)] Connector with degree of protection IP20	6SL3060-4A..0-0AA0
• In precise decimeter lengths[1)]	
- Connector with degree of protection IP20	6FX2002-1DC00-....
- Connector with degree of protection IP67	6FX2002-1DC20-....

[1)] For complete article number and length code, see MOTION-CONNECT connection systems.

© Siemens 2022

Overview

SIMATIC ET 200 distributed I/O

SIMATIC ET200 – offers the right solution for every application

SIMATIC ET 200 offers a broad range of distributed I/O systems - for solutions in the control cabinet or without a control cabinet directly at the machine and for applications in hazardous areas. Thanks to their modular design, ET 200 systems are easy to scale and expand in small steps. Ready integrated add-on modules reduce costs while at the same time offering extremely diverse application potential. A huge range of different combinations can be selected: Digital and analog inputs/outputs, intelligent modules with CPU functionality, safety engineering, motor starters, pneumatic systems, frequency converters and a variety of technology modules, e.g. for counting and positioning tasks.

The communication via PROFIBUS and PROFINET, the uniform engineering, the user-friendly diagnostic tools and the optimum interfacing with SIMATIC controllers and HMI equipment are all proof of the unique consistency of the Totally Integrated Automation.

PROFIBUS

PROFIBUS is the international standard (IEC 1158/61784) for the field level. It is the only fieldbus to allow communication both in manufacturing applications and in process-oriented applications.

PROFIBUS is used to connect field devices such as distributed I/O devices or drives to automation systems such as SIMATIC S7, SIMOTION, SINUMERIK or PCs.

PROFIBUS is standardized in accordance with IEC 61158 and is a powerful, open and rugged fieldbus system with short response times. PROFIBUS is available in different forms for various applications.

PROFIBUS DP (distributed I/O)

PROFIBUS DP is used for connecting distributed field devices, e.g. SIMATIC ET 200 or drives, with extremely fast response times. PROFIBUS DP is used when actuators/sensors are distributed at the machine or in the plant, e.g. at field level.

PROFINET

PROFINET is the open, cross-vendor Industrial Ethernet standard (IEC 61158/61784) for automation.

Based on Industrial Ethernet, PROFINET enables direct communication between field devices (IO devices) and controllers (IO controllers), up to and including the solution of isochronous drive controls for motion control applications.

As PROFINET is based on Standard Ethernet according to IEEE 802.3, any devices from the field level to the management level can be connected.

In this way, PROFINET enables system-wide communication, supports plant-wide engineering and applies IT standards, such as Webserver or FTP, right down to field level. Tried and tested fieldbus systems, such as PROFIBUS or AS-Interface, can be easily integrated without any modification to the existing devices.

More information

You will find further information on the internet or in the Siemens Industry Mall:

www.siemens.com/simatic

www.siemens.com/industrymall

© Siemens 2022

Overview

Stabilized power supplies

The 24 V DC power supply units from the SITOP range are optimized for industrial use and operate on the switched-mode principle. Due to the precisely regulated output voltage, the devices are even suitable for the connection of sensitive sensors. Different versions are available depending on the output current and specific application.

In some cases, functional expansion is possible with add-on modules. For example, to protect against long supply system outages, 6 A, 15 A and 40 A DC UPS modules are available with external buffering by rechargeable batteries and maintenance-free SITOP UPS500 with capacitor technology. 48 V DC power supplies have been added to the SITOP product range.

The SITOP PSU400M power supply unit with 600 V DC input is suitable for use on frequency converters as an efficient DC/DC converter.

It converts the DC link voltage to a stabilized 24 V DC thus allowing, for example, specific emergency retraction movements to be performed in the event of a mains failure. This is possible because the control system and the drive electronics continue to receive a power supply for as long as there is sufficient energy stored in the DC link.

The wide DC input range (200 V to 900 V DC) and the high efficiency level (up to 96 %) ensure efficient use of the DC link energy. The compact power supply units are versatile in their application thanks to their high overload capability with 50 % extra power for 5 s/min, their comprehensive range of functions and their rugged construction. The selectable ON delay which ensures that the converter's DC link is not loaded immediately during starting is one of the features that makes it ideal for operation on SINAMICS frequency converters.

Benefits

- High degree of efficiency
  The efficiency of approximately 90% keeps the current consumption low and the control cabinet cool.
- Easy installation
  The low weight and mounting accessories support fast and therefore low-cost installation.
- Low space requirements
  The high power/weight ratio means that the devices only require minimal space in the control cabinet and in the machines.
- Accurate output voltage
  The output voltage of 24 V DC remains accurate even under conditions of extreme mains voltage variation. The loads are protected from overvoltage spikes which lengthens the lifetime and reduces downtimes.
- Low residual ripple
  The low residual ripple of less than 0.4% supports voltage-sensitive loads.
- Integrated short-circuit protection
  No additional protection of the cables in the 24 V DC circuit is required.
- Safety isolation
  The UA output is electrically isolated from the input (output voltage SELV acc. to EN 60950). Dangerous voltages cannot arise due to electrical isolation at the output.
- Meets the requirements of national and international standards, e.g.:
  - CE marking in accordance with 89/336 EEC und 73/23 EEC
  - UL/cUL (CSA) approval
  - FM approval (Factory Mutual)
  - Marine approval
- No release of silicone

More information

You will find further information on the internet or in the Siemens Industry Mall:

www.siemens.com/sitop

www.siemens.com/industrymall

© Siemens 2022

Overview

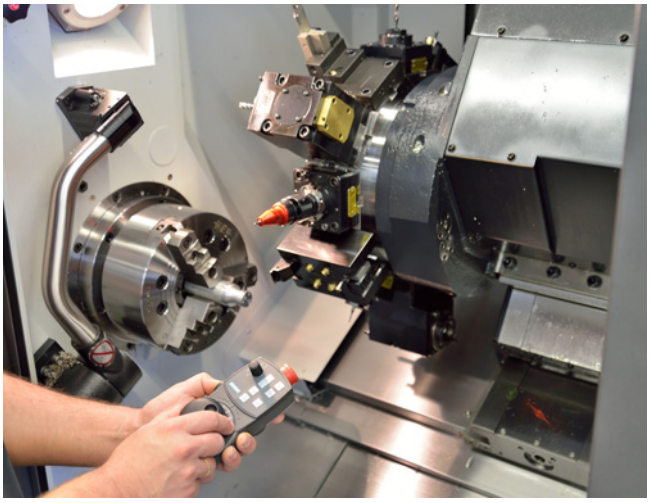

SINUMERIK Safety Integrated provides integrated safety functions that support the implementation of highly effective personnel and machine protection. These safety functions meet the requirements of EN 61508 for use up to and including SIL2 and Category 3, as well as PL d according to EN ISO 13849. This allows not only for simple and economic implementation of the main requirements for functional safety, but also the realization of practical operating and security concepts.

Available functions include, among others:

- Functions for safety monitoring of velocity and standstill
- Functions for establishing safe boundaries in work spaces and protected spaces, and for range recognition
- Direct connection of all safety-related signals and their internal logical linking
- Safe Brake Management
- Safe communication via PROFIBUS or PROFINET
- Operator-controlled acceptance test – integrated in SINUMERIK Operate

Benefits

- High level of safety:
  Complete implementation of the safety functions in Category 3/SIL 2/PL d
- High level of flexibility:
  Practical safety and operating concepts can be implemented
- Extremely cost-effective:
  Reduced hardware and installation costs
- Enhanced availability:
  Absence of interference-susceptible electromechanical switching elements

Function

SINUMERIK Safety Integrated

The safety functions are available in all modes and can communicate with the process using safety-oriented input/output signals. They can be implemented for each individual axis and spindle.

Safety Integrated drive-based (basic version):

- Safe Torque Off (STO)
  Suppression of drive pulses, providing safe electronic interruption of the energy supply
- Safe Brake Control (SBC)
  Safe, 2-channel control of a holding brake – integrated in the SINAMICS S120 Motor Module
- Safe Stop 1 (SS1) time-controlled
  Safe shutdown of a drive, with subsequent transition into the STO state

The Safety Integrated basic functions are license-free.

Safety Integrated system-integrated (option):

- Safe standstill (SH, STO)
  Suppression of drive pulses, providing safe electronic interruption of the power supply
- Safe shutdown
  Ensures safe transition of the drive from motion to standstill when a monitoring device or sensor (e.g. light barrier) responds, optimally adapted to the operating conditions of the machine.
- Safe Operating Stop (SBH, SOS)
  Monitors drives for standstill – the drives remain fully functional in the position control
- Safely-Limited Speed (SG, SLS)
  Monitoring of 4 configurable speed limits, e.g. in setup mode In SLS stages 2 and 4 it is possible to specify 16 percentage values in each case.
- Safe Brake Ramp (SBR)
  Safe monitoring of the braking operation
- Safety-related output $n < n_x$
  Safe checkback signal when a value falls below a settable speed limit, e.g. for enabling a protective door
- Safe software limit switches (SE, SLP)
  Switchable traversing range limitation (2 areas)
- Safe software cam (SN, SCA)
  Range detection: can be implemented by means of up to 30 safety-related parameterizable cams per axis
- Safe Programmable Logic (SPL)
  - Direct connection of all safety-related signals and their internal logical linking
  - Safety-related input/output signals (SGE/SGA) → Interface with process
- Safe brake management (SBM)
  - Safe Brake Control (SBC)
    2-channel braking signal – integrated in the SINAMICS S120 Motor Module
  - Safe Brake Test (SBT) → Diagnostics function
    Cyclic brake test

Safety-related communication via standard bus:

- Connection of distributed I/O for process and safety signals via PROFIBUS/PROFINET using the PROFIsafe protocol
- Safety-oriented CPU – CPU communication via PROFIBUS/PROFINET

Commissioning support:

- Integrated acceptance test with SINUMERIK Operate
  Partially automated acceptance test for all safety-related functions. Simple operation of the test process, automatic configuration of trace functions and automatic generation of an acceptance record.

© Siemens 2022

Function

SINUMERIK Safety Integrated plus
Safety Integrated Extended Functions (option):

The following Safety Integrated functions are available (terms in accordance with IEC 61800-5-2).

- Safe Torque Off (STO)
  Suppression of drive pulses, providing safe electronic interruption of the energy supply
- Safe Stop 1 (SS1) time-controlled or speed-controlled
  Safe shutdown of a drive, with subsequent transition into the STO state
- Safe Stop 2 (SS2)
  Safe stopping of the drive with subsequent monitoring for standstill (SOS)
- Safe Stop 2E (SS2E)
  Path-controlled stopping of the drive with subsequent safe monitoring for standstill (SOS)
- Safe Stop 2ESR (SS2ESR)
  Stopping and retraction of the drive with subsequent safe monitoring for standstill (SOS)
- Safe Operating Stop (SOS)
  Monitoring of drives for standstill – the drives remain fully functional in closed-loop position control
- Safely-Limited Speed (SLS)
  Monitoring of 4 configurable speed limit values, e.g. during setup
  For the SLS limit value 1 an override can additionally be specified via the fail-safe PLC.
- Safe Acceleration Monitor (SAM)/Safe Brake Ramp (SBR)
  Safe monitoring of the braking operation
- Safe Speed Monitor (SSM)
  Safe checkback signal when a value falls below a settable speed limit, e.g. for enabling a protective door
- Safely-Limited Position (SLP)
  Switchable traversing range limitation (2 ranges)
- Safe Position (SP)
  The position values are transferred in a fail-safe manner to the integrated fail-safe PLC.
- Transfer of safe position values (SP)
  The position is transferred to the integrated fail-safe PLC of the SINUMERIK 840D sl and processed in the fail-safe program, e.g. to implement more than 30 cams
- Safe Cam (SCA)
  Range detection: can be implemented by means of up to 30 safety-related parameterizable cams per axis
- Safe Direction (SDI)
  Safe monitoring of the direction of motion
- Safely-Limited Acceleration (SLA)
  The function prevents the acceleration from exceeding a specified limit
- Safe programmable logic (in the integrated fail-safe PLC)
  - Direct connection of all safety-related signals and their internal logical linking
  - Safety-related input/output signals (SGE/SGA) → Interface with process
- Safe Brake Management (SBM)
  - Safe Brake Control (SBC)
    2-channel braking signal – integrated in the SINAMICS S120 Motor Module
  - Safe Brake Test (SBT) → Diagnostics function
    Cyclic brake test

Safety-related communication via standard bus:

- Connection of distributed I/O for process and safety signals via PROFIBUS/PROFINET using the PROFIsafe protocol
- Safety-oriented CPU – CPU communication via PROFIBUS/PROFINET

Commissioning support:

- Graphical commissioning with SINUMERIK Operate
  For each Safety function there is a clear, graphical display available for fast commissioning
- Integrated acceptance test with SINUMERIK Operate
  Partially automated acceptance test for all safety-related functions. Simple operation of the test process, automatic configuration of trace functions and automatic generation of an acceptance record

Diagnostic support:

- System-integrated diagnostic support of the Safety Integrated functions and fail-safe modules in SINUMERIK Operate

Integration

Requirements:

- SINUMERIK 840D sl
- SINAMICS S120 in booksize format
- The encoder systems used must meet the requirements of SINUMERIK Safety Integrated
- The measuring circuit cables must comply with the specifications of SINAMICS S120
- Sensor/actuator integration with PROFIsafe I/Os
- Fail-safe modules:
  - SIMATIC ET 200M
  - SIMATIC ET 200MP
  - SIMATIC ET 200SP
  - SIMATIC ET 200pro
  - SIMATIC ET 200iSP
  - SIMATIC ET 200eco
- Fail-safe DP standard slaves (light array, laser scanner, etc.)
- Extension with standard I/Os is possible
- SIMATIC STEP 7 Professional
- SIMATIC STEP 7 Safety Advanced
- SINUMERIK Toolbox

© Siemens 2022

Selection and ordering data

Description	Article No.
SINUMERIK Safety Integrated	
For SINUMERIK 840D sl	
• SI-Basic For 1 NCU including 1 axis/spindle 4 SPL inputs and 4 SPL outputs	**6FC5800-0AM63-0YB0**
• SI-Comfort For 1 NCU including 1 axis/spindle 64 SPL inputs and 64 SPL outputs	**6FC5800-0AM64-0YB0**
• SI-High Feature For 1 NCU including 1 axis/spindle 192 SPL inputs and 192 SPL outputs Requirement: NCU 720.3B/NCU 730.3B	**6FC5800-0AS68-0YB0**
• SI axis/spindle Extra for each additional axis/spindle Extended motion monitoring functions For 1 axis/spindle	**6FC5800-0AC70-0YB0**
• SI axis/spindle package Additional 15 axes/spindles Extended motion monitoring functions For 15 axes/spindles	**6FC5800-0AC60-0YB0**
• SI-Connect Extended safety-related communication to 16 connections	**6FC5800-0AS67-0YB0**
SINUMERIK Safety Integrated plus	
For SINUMERIK 840D sl	
• SI axis/spindle Extended motion monitoring functions For 1 axis/spindle	**6FC5800-0AK00-0YB0**
• SI multi-axis package Extended motion monitoring functions For all axes/spindles activated in the SINUMERIK	**6FC5800-0AS61-0YB0**
• SI-Logic Enabling of the F-PLC integrated in the SINUMERIK for failsafe programming	**6FC5800-0AS60-0YB0**

Configuration

Only one SI Basic and one SI Comfort option can be ordered for each SINUMERIK 840D sl. If a machine with Safety Integrated requires up to 4 safe inputs and 4 safe outputs, the SI Basic option can be ordered. If five or more safe inputs/outputs are required, the SI Comfort option should be ordered.

Ordering example 1:
The machine has 2 axes and 1 spindle which are to be monitored by Safety Integrated. 4 safe inputs and 3 safe outputs are required. The following options must be ordered:

Number	Article No.	Description
1	6FC5800-0AM63-0YB0	SI-Basic
2	6FC5800-0AC70-0YB0	SI axis/spindle Extended motion monitoring functions for 1 axis/spindle

Ordering example 2:
The machine has 5 axes and 1 spindle, which are to be monitored by Safety Integrated. 9 safe inputs and 5 safe outputs are required. The following options must be ordered:

Number	Article No.	Description
1	6FC5800-0AM64-0YB0	SI-Comfort
5	6FC5800-0AC70-0YB0	SI axis/spindle Extended motion monitoring functions for 1 axis/spindle

More information

The Safety Integrated functions of the SINUMERIK are generally certified by independent institutes. An up-to-date list of certified components is available on request from your local Siemens office or regional company. If you have any questions relating to certifications that have not been completed, please ask your Siemens contact.

Encoder systems

If you require information about the use of suitable encoder systems with SINUMERIK Safety Integrated, please contact your local Siemens office or regional company.

© Siemens 2022

Overview

CNC and HMI performance

The projected utilization of the system is under the sovereignty of the machine manufacturer.

When combining various CNC options/functions, the CNC can reach its performance limit. The remedy here is to use the next bigger hardware.

The machine manufacturer must ensure by configuration that the functions/options used are executable on the NCU.

© Siemens 2022

Overview

As a consequence of the prevailing export restrictions applicable to the CNC software of numerical controls in relation to particular control functions in accordance with the European/German Export List (export list item 2D002), the SINUMERIK 840D sl is available in two versions.

The **versions with full scope** of SINUMERIK 840D sl CNC functions **require official approval** according to the export list item 2D002 when exported to countries outside the EU.

The **export versions** of SINUMERIK 840DE sl have restricted functionality in accordance with the export list restrictions, and therefore **do not require official approval** as a result of their type in accordance with EU or German law.

The approval status for the complete CNC system is correspondingly dependent on the hardware or software version used.

General note:

If any particular components require official re-export approval according to US law, this must be duly filed for. Information about official approval requirements for supplied components is given in the delivery documentation: Goods labeled here with "AL not equal to N" are subject to European or German export authorization when being exported out of the EU. Goods marked with "ECCN not equal to N" are subject to US re-export authorization. Even if goods are not labeled or labeled with "AL:N" or "ECCN:N", they may still be subject to export authorization depending on the final destination and end use of the goods.

If a purchase contract is concluded, fulfillment of this contract by Siemens shall be subject to the proviso that there are no impediments arising from any national or international regulations on foreign trade and that there are no embargoes and/or other sanctions.

Important export information

Export of standard versions of components or systems can be subjected to a time-consuming official authorization process, so it is recommended that the **export version is used where applicable**.

"Information on classification verification (Auskunft zur Güterliste (AZG))" pertaining to the official export authorization process is available for each export version (e.g. Federal Office of Economics and Export Control (BAFA), Customs). You can obtain a copy of this verification from your local Siemens sales office.

When the versions with full functional scope are used, it is important to note that official authorization is also required for the export of components subject to export approval within the framework of providing services, the supply of spare parts and for delivery of software updates and upgrades. This is especially relevant in cases where the CNC is exported after the machine manufacturer has installed it in a machine tool. The lengthy official approval procedure can severely restrict after-sales service.

When an application for an export permit for a system is made, we therefore recommend that spare parts supplies for any components requiring approval are included in the application as a matter of course to avoid future delays.

If the CNC is to be exported as an installed component in a machine tool, we recommend that machine manufacturers include any spare parts requiring approval in the export permit application for the machine. If the machine itself does not require official export approval, but contains components which do, we recommend that an export permit for the replacement supply of such spare parts is applied for in advance, in case this is necessary.

Spare part supplies requiring official approval can then be exported quickly and easily by the machine manufacturer himself, or by Siemens if the manufacturer can make the original export permit available to Siemens.

Restricted functionality of export versions

The letter "E" in the name of the CNC indicates that it is the export version, i.e. the relevant control software is classified as not requiring official approval (AL=N) with the functional restrictions specified in the table according to AL item 2D002.

You will find additional information about "restricted functionality" for the export versions in the glossary for Catalog NC 62 in the Siemens Industry Mall at:

https://mall.industry.siemens.com/mall/en/en/Catalog/Products/10352767

© Siemens 2022

Overview (continued)

Restricted functionality of export versions

Description ✓ Basic version | – Not available | ⊞ Restricted functionality of the export version	**Article No.**	**Order code**	**SINUMERIK 840DE sl**
Scalable analog setpoint*) Run MyCC /SANS	6FC5800-0AN48-0YB0	N48	–
Multi-axis interpolation > 4 interpolating axes	6FC5800-0AM15-0YB0	M15	–
Crank interpolation*) Run MyCC /CRIP	6FC5800-0AN04-0YB0	N04	–
Motion control, model-based*) Run MyCC /EMC	6FC5800-0AN47-0YB0		–
Intelligent adaptation of the machine's dynamic response Run MyCC /AJET	6FC5800-0AN82-0YB0		–
Generic couplings:			
• CP-Basic	6FC5800-0AM72-0YB0	M72	⊞ 1)
• CP-Comfort	6FC5800-0AM73-0YB0	M73	⊞ 1)
• CP-Expert	6FC5800-0AM74-0YB0	M74	⊞ 1)
Transformation redundant and spatially distributed axes at workpiece in Cartesian coordinate system*) Run MyCC /RDCC	6FC5800-0AN26-0YB0	N26	–
Generic transformation	✓		–
Transformation rotating workpiece and tool*) Run MyCC /2RPT	6FC5800-0AN43-0YB0	N43	–
Transformation DOUBLETRANSMIT*) Run MyCC /2TRA	6FC5800-0AM25-0YB0	M25	–
Double generic transformation*) Run MyCC /DGEN	6FC5800-0AN34-0YB0	N34	–
Transformation Dynamic Swivel TRIPOD Basis 5 axes*) Run MyCC /DSTT	6FC5800-0AM84-0YB0	M84	–
Transformation eccentric axis*) Run MyCC /ECCA	6FC5800-0AN44-0YB0	N44	–
Transformation eccentric*) Run MyCC /ECCE	6FC5800-0AN41-0YB0	N41	–
Transformation HEXAPOD 6-axis transformation*) Run MyCC /HEX	6FC5800-0AM71-0YB0	M71	–
Transformation PARACOP 3 axes Run MyCC /PACO	6FC5800-0AM44-0YB0	M44	–
Transformation swivel axis*) Run MyCC /PIVA	6FC5800-0AN52-0YB0	N52	–
Transformation Handling Run MyCC /RCTRA	6FC5800-0AM31-0YB0	M31	–
Transformation robotic extended*) Run MyCC /ROBX	6FC5800-0AN54-0YB0	N54	–
Transformation rotating eccentric*) Run MyCC /ROTE	6FC5800-0AN37-0YB0	N37	–
Transformation pantograph kinematics*) Run MyCC /SCIS	6FC5800-0AM51-0YB0	M51	–
Transformation TRIPOD hybrid kinematics*) Run MyCC /THYK	6FC5800-0AN36-0YB0	N36	–
Transformation TRICEPT 5-axis transformation*) Run MyCC /TRIC	6FC5800-0AM46-0YB0	M46	–
Machining package 5 axes	6FC5800-0AM30-0YB0	M30	–
Machining package 5 axes, additional function 7th axis	6FC5800-0AS01-0YB0	S01	–
Milling technology package SINUMERIK MDynamics 5 axes	6FC5800-0AS33-0YB0	S33	–
Cartesian travel to fixed stop Run MyCC /FXSC	6FC5800-0AN38-0YB0	N38	–
Velocity adaptation for water jet cutting Run MyCC /VADA	6FC5800-0AN05-0YB0	N05	–

*) Compile cycle that is not generally released. Requires machine-specific release process. Please contact your local Siemens sales office or Regional Company.

1) The number of simultaneously traversing axes is restricted to 4.

© Siemens 2022

Overview (continued)

Restricted functionality of export versions (continued)

Description ✓ Basic version | – Not available | ⊞ Restricted functionality of the export version	**Article No.**	**Order code**	**SINUMERIK 840DE sl**
Extrapolated switching signals*) Run MyCC /XOUT	6FC5800-0AN51-0YB0	N51	–
Synchronous motion Run MyCC /SYMO	6FC5800-0AN66-0YB0	N66	–
Fast braking during grinding Run MyCC /SANS	6FC5800-0AN81-0YB0	N81	–
Handling package	6FC5800-0AS31-0YB0	S31	–
Use a Comau robot with a SINUMERIK 840D sl Run MyRobot /Direct control (Run MyCC /ROBX/AR)*)	6FC5800-0AR05-0YB0	R05	–
Electronic transfer CP	6FC5800-0AM76-0YB0	M76	⊞ 1)
SINUMERIK plastics package IME	6FC5800-0AS40-0YB0	S40	–
Synchronized actions and fast auxiliary function output incl. 3 synchronous functions	✓		⊞ 1)
Synchronized actions stage 2	6FC5800-0AM36-0YB0	M36	⊞ 2)
1D/3D clearance control in position control cycle Run MyCC /CLC	6FC5800-0AM40-0YB0	M40	⊞ 3)
1D/3D clearance control in position control cycle with free direction Run MyCC /CLC-FD	6FC5800-0AM65-0YB0	M65	⊞ 3)
Tool orientation interpolation	✓		–
Collision protection Protect MyMachine /CC Axis Monitor	6FC5800-0AN06-0YB0		–
Leadscrew error compensation, bidirectional	6FC5800-0AM54-0YB0	M54	⊞ 4)
Sag compensation, multi-dimensional	6FC5800-0AM55-0YB0	M55	⊞ 4)
Nodding compensation Run MyCC /NOCO	6FC5800-0AN63-0YB0		–
Universal spatial compensation interface*) Run MyCCI /UCI	6FC5800-0AN75-0YB0	N75	–
Spatial compensation for 3 axes Run MyCC /VCS-A3	6FC5800-0AN15-0YB0	N15	–
Spatial compensation for 5 axes Run MyCC /VCS-A5	6FC5800-0AN16-0YB0	N16	–
Spatial compensation for 5 axes plus Run MyCC /VCS-A5 plus	6FC5800-0AN17-0YB0	N17	–
Spatial compensation for 2 axes*) Run MyCC /VCS-ROT	6FC5800-0AN31-0YB0	N31	–
Vibration extinction Run MyCC /VIBX	6FC5800-0AN11-0YB0	N11	–
Magnetic cogging torque compensation*) Run MyCC /COCO	6FC5800-0AN46-0YB0	N46	–
Compensation of a forced mechanical coupling in the machine coordinate system*) Run MyCC /AXCO	6FC5800-0AM81-0YB0	M81	–
Integrate OEM-specific solutions in the CNC kernel SINUMERIK Create MyCC:			
• CNC kernel openness Create MyCC	On request		–
• Execute compile cycles Run MyCC	On request		–
• Universal spatial compensation interface*) Run MyCCI /UCI	6FC5800-0AN75-0YB0	N75	–

*) Compile cycle that is not generally released. Requires machine-specific release process.
Please contact your local Siemens sales office or Regional Company.

1) The number of simultaneously traversing axes is restricted to 4.

2) The number of simultaneously traversing path and positioning axes is restricted to 4.

3) Clearance control can be applied to only one axis because 5-axis transformation is not available. The number of interpolating axes is restricted to 4 without Run MyCC /CLC and to 3 with Run MyCC /CLC.

4) The correctable tolerance band is restricted to 1 mm.

© Siemens 2022

Description ✓ Basic version | O Option | – Not available	**Instructions** (footnotes are applicable line by line)	**Article No.** **Product ID**	**Order code**	**SINUMERIK**	
				840DE sl	**840D sl**
Control structure and configuration					
SINUMERIK 840D sl:					
• NCU 710.3B PN with PLC 317-3 PN/DP		**6FC5371-0AA30-0AB0**		O	O
• NCU 720.3B PN with PLC 317-3 PN/DP		**6FC5372-0AA30-0AB0**		O	O
• NCU 730.3B PN with PLC 317-3 PN/DP		**6FC5373-0AA30-0AB0**		O	O
• Numeric Control Extension NX10.3		**6SL3040-1NC00-0AA0**		O	O
• Numeric Control Extension NX15.3		**6SL3040-1NB00-0AA0**		O	O
• Maximum configuration NX:					
- NCU 710.3B PN				2	2
- NCU 720.3B PN				5	5
- NCU 730.3B PN				5	5
• Maximum configuration NCU + NX + CU3x0-2:					
- NCU 710.3B PN				9	9
- NCU 720.3B PN				13	13
- NCU 730.3B PN				15	15
• Maximum configuration CU3x0-2:					
- NCU 710.3B PN	x = no. of NX			8 - x	8 - x
- NCU 720.3B PN	x = no. of NX			12 - x	12 - x
- NCU 730.3B PN	x = no. of NX			14 - x	14 - x
• SINUMERIK COM01.3 module	As an alternative to CBE30-2 module	**6FC5312-0FA01-1AA0**		O	O
• CBE30-2 communication module with PROFINET IO	As an alternative to COM01.3 module	**6FC5312-0FA00-2AA0**		O	O
Software for SINUMERIK NCU:					
• CNC software 31-3 export version:					
- On CompactFlash Card	Single license Current software version	**6FC5851-1YG00-0YA0**		O	–
	Single license SW version 4.95 SP1	**6FC5851-1YG47-1YA0**		O	–
	Without license SW version 4.95 SP1	**6FC5851-1YG47-1YA8**		O	–
- Without data storage medium	Single license	**6FC5851-1YF00-0YB0**		O	–
• CNC software 31-3 version with full functional scope:	Export approval required				
- On CompactFlash Card	Single license Current software version	**6FC5851-1XG00-0YA0**		–	O
	Single license SW version 4.95 SP1	**6FC5851-1XG47-1YA0**		–	O
	Without license SW version 4.95 SP1	**6FC5851-1XG47-1YA8**		–	O
- Without data storage medium	Single license	**6FC5851-1XF00-0YB0**		–	O

© Siemens 2022

Control structure and configuration

Description ✓ Basic version | O Option | – Not available	Instructions (footnotes are applicable line by line)	Article No. Product ID	Order code	SINUMERIK 840DE sl	 840D sl
Control structure and configuration (continued)					
Software for SINUMERIK NCU, SINUMERIK PCU (SIMATIC IPC for SINUMERIK) and PC:					
• CNC software 31-3 export version and SINUMERIK Operate:					
- On DVD-ROM	Without license Update on order SW version 4.95 SP1	**6FC5851-1YC47-1YA8**		O	–
• CNC software 31-3 version with full functional scope and SINUMERIK Operate:	Export approval required				
- On DVD-ROM	Without license Update on order SW version 4.95 SP1	**6FC5851-1XC47-1YA8**		–	O
Machining channels/mode groups:				✓ 1	✓ 1
• Mode group, each additional		**6FC5800-0AC00-0YB0**	**C01 ... C09**	O	O
• Machining channel, each additional		**6FC5800-0AC10-0YB0**	**C11 ... C19**	O	O
• Maximum configuration:					
- CNC software 31-3				10	10
- NCU 710.3B PN				4	4
- NCU 720.3B PN				10	10
- NCU 730.3B PN				10	10
CNC user memory, buffered for programs and OEM cycles:				✓ 10 MB	✓ 10 MB
• Expansion by increments of 2 MB		**6FC5800-0AD00-0YB0**	**D01 ... D06**	O	O
• Maximum configuration:					
- NCU 710.3B PN				16 MB	16 MB
- NCU 720.3B PN				22 MB	22 MB
- NCU 730.3B PN				22 MB	22 MB
CNC user memory, expanded for programs and OEM cycles:					
• Integrated:	Requirement: CNC user memory, expanded (option P12)	**6FC5800-0AP77-0YB0**	**P77**	O 100 MB	O 100 MB
- On CompactFlash card of the NCU	Not in combination with SINUMERIK PCU and SIMATIC IPC for SINUMERIK	**6FC5800-0AP12-0YB0**	**P12**	O 6 GB	O 6 GB
• On SSD:	Requirement: CNC user memory, expanded (option P77)				
- SINUMERIK PCU (SIMATIC IPC for SINUMERIK)				O 40 GB	O 40 GB
- SIMATIC IPC427E	In combination with SIMATIC IPC for SINUMERIK			O 120 GB	O 120 GB
- SIMATIC IPC477E	In combination with SIMATIC IPC for SINUMERIK			O 120 GB	O 120 GB
• On external storage, e.g. local network, server, USB storage medium or memory stick	Requirement: Execution from external storage EES (option P75)			O Unlimited	O Unlimited

© Siemens 2022

Description ✓ Basic version | O Option | – Not available	**Instructions** (footnotes are applicable line by line)	**Article No.** **Product ID**	**Order code**	**SINUMERIK**	
				840DE sl	**840D sl**
Control structure and configuration (continued)					
HMI user memory					
• Expanded on the CompactFlash card of the NCU	Not in combination with SINUMERIK PCU (SIMATIC IPC for SINUMERIK)	**6FC5800-0AP12-0YB0**	**P12**	O 6 GB	O 6 GB
• On SSD					
- SINUMERIK PCU (SIMATIC IPC for SINUMERIK)				O 40 GB	O 40 GB
- SIMATIC IPC427E	In combination with SIMATIC IPC for SINUMERIK			O 120 GB	O 120 GB
- SIMATIC IPC477E	In combination with SIMATIC IPC for SINUMERIK			O 120 GB	O 120 GB
Axes/spindles or positioning axes/auxiliary spindle CNC software 31-3:				✓ 3	✓ 3
• Axis/spindle, each additional		**6FC5800-0AA00-0YB0**	**A01... A28**	O	O
• Positioning axis/auxiliary spindle, each additional		**6FC5800-0AB00-0YB0**	**B01... B28**	O	O
• Multi-axis package Expansion to 31 axes/spindles and 10 machining channels		**6FC5800-0AM10-0YB0**	**M10**	O	O
• Maximum configuration of axes:					
- NCU 710.3B PN				8	8
- NCU 720.3B PN				31	31
- NCU 730.3B PN				31	31

© Siemens 2022

2

Description ✓ Basic version | O Option | – Not available	**Instructions** (footnotes are applicable line by line)	**Article No.** **Product ID**	**Order code**	**SINUMERIK**	
				840DE sl	**840D sl**
Control structure and configuration (continued)					
Axes/spindles or positioning axes/auxiliary spindle CNC software 31-3 (continued):					
• Maximum configuration of spindles:					
- NCU 710.3B PN				8	8
- NCU 720.3B PN				31	31
- NCU 730.3B PN				31	31
• Configuration, axes incl. spindles per channel:					
- NCU 710.3B PN				8	8
- NCU 720.3B PN				20	20
- NCU 730.3B PN				20	20
• PLC-controlled axis				✓	✓
• PLC positioning axis via PROFIBUS DP				✓	✓
• Maximum configuration axes/spindles, CNC and PLC-controlled:					
- NCU 710.3B PN				15	15
- NCU 720.3B PN				40	40
- NCU 730.3B PN				50	50
• Maximum configuration axes/spindles, PLC-controlled:	No CNC option axis/spindle required				
- NCU 710.3B PN	Max. 15 minus CNC-controlled axes/spindles			7 ... 15	7 ... 15
- NCU 720.3B PN	Max. 40 minus CNC-controlled axes/spindles			9 ... 40	9 ... 40
- NCU 730.3B PN	Max. 50 minus CNC-controlled axes/spindles			19 ... 50	19 ... 50

© Siemens 2022

Description ✓ Basic version | O Option | – Not available	**Instructions** (footnotes are applicable line by line)	**Article No.** **Product ID**	**Order code**	**SINUMERIK**	
				840DE sl	**840D sl**
Drives					
SINAMICS S120 Combi Power Modules	See SINAMICS S120 Combi				
• 3-axis Power Modules		**6SL3111-3VE21-6FA2** **6SL3111-3VE21-6EA1** **6SL3111-3VE22-0HA1**		O	O
• 4-axis Power Modules		**6SL3111-4VE21-0EA1** **6SL3111-4VE21-6FA2** **6SL3111-4VE21-6EA1** **6SL3111-4VE21-6EC1** **6SL3111-4VE21-6ED1** **6SL3111-4VE22-0HA1**		O	O
SINAMICS S120 booksize compact format as expansion for SINAMICS S120 Combi	See SINAMICS S120				
• Single Motor Modules		**6SL3420-1TE13-0AA1** **6SL3420-1TE15-0AA1** **6SL3420-1TE21-0AA1** **6SL3420-1TE21-8AA1**		O	O
• Double Motor Modules		**6SL3420-2TE11-7AA1** **6SL3420-2TE13-0AA1** **6SL3420-2TE15-0AA1**		O	O
SINAMICS S120 Control Units for single-axis drives without CompactFlash card:					
• CU310-2 PN	For positioning tasks via PLC	**6SL3040-1LA01-0AA0**		O	O
• CU310-2 DP	For positioning tasks via PLC	**6SL3040-1LA00-0AA0**		O	O
SINAMICS S120 Control Units without CompactFlash card:					
• CU320-2 PN		**6SL3040-1MA01-0AA0**		O	O
• CU320-2 DP		**6SL3040-1MA00-0AA0**		O	O
CompactFlash card with SINAMICS firmware:					
• License without performance expansion	FW version 5.2 SP3	**6SL3054-0FC30-1BA0**		O	O
• License with firmware option Performance expansion	FW version 5.2 SP3	**6SL3054-0FC31-1BA0**		O	O
CUA31 Control Unit Adapter		**6SL3040-0PA00-0AA1**		O	O
SINAMICS S110 Control Units:					
• CU305 DP	For positioning tasks via PLC	**6SL3040-0JA00-0AA0**		O	O
• CU305 PN	For positioning tasks via PLC	**6SL3040-0JA01-0AA0**		O	O
SINAMICS S120 Sensor Modules Cabinet-Mounted:					
• SMC10	No SINUMERIK Safety Integrated	**6SL3055-0AA00-5AA3**		O	O
• SMC20		**6SL3055-0AA00-5BA3**		O	O
• SMC30	No SINUMERIK Safety Integrated	**6SL3055-0AA00-5CA2**		O	O
• SMC40		**6SL3055-0AA00-5DA0**		O	O

© Siemens 2022

2

Description ✓ Basic version | O Option | – Not available	**Instructions** (footnotes are applicable line by line)	**Article No.** **Product ID**	**Order code**	**SINUMERIK**	
				840DE sl	**840D sl**
Drives (continued)					
SINAMICS S120 Sensor Modules External:					
• SME20		**6SL3055-0AA00-5EA3**		O	O
• SME25		**6SL3055-0AA00-5HA3**		O	O
• SME120		**6SL3055-0AA00-5JA3**		O	O
• SME125		**6SL3055-0AA00-5KA3**		O	O
SINAMICS S120 TB30 Terminal Board		6SL3055-0AA00-2TA0		–	–
SINAMICS S120 TM Terminal Modules:					
• TM15		**6SL3055-0AA00-3FA0**		O	O
• TM31		**6SL3055-0AA00-3AA1**		O	O
• TM41		**6SL3055-0AA00-3PA1**		O	O
• TM120		**6SL3055-0AA00-3KA0**		O	O
SINAMICS S120 Hydraulic Linear Actor HLA Module		**6SL3420-2HX00-0AA0**		O	O
SINAMICS S120 DRIVE-CLiQ Hub Modules:					
• DMC20		**6SL3055-0AA00-6AA1**		O	O
• DME20		**6SL3055-0AA00-6AB0**		O	O
SINAMICS S120 VSM10 Voltage Sensing Module	For SINAMICS S120 chassis format integrated	**6SL3053-0AA00-3AA1**		O	O
SINAMICS S120 booksize format Internal air cooling					
• Single Motor Modules		**6SL3120-1TE28-5AA3** **6SL3120-1TE31-3AA3** **6SL3120-1TE32-0AA4**		O	O
- C type		**6SL3120-1TE21-8AC0** **6SL3120-1TE22-4AC0** **6SL3120-1TE23-0AC0** **6SL3120-1TE24-5AC0** **6SL3120-1TE26-0AC0**		O	O
- D type		**6SL3120-1TE13-0AD0** **6SL3120-1TE15-0AD0** **6SL3120-1TE21-0AD0** **6SL3120-1TE21-8AD0** **6SL3120-1TE22-4AD0** **6SL3120-1TE23-0AD0**		O	O
• Double Motor Modules					
- C type		**6SL3120-2TE21-8AC0**		O	O
- D type		**6SL3120-2TE13-0AD0** **6SL3120-2TE15-0AD0** **6SL3120-2TE21-0AD0** **6SL3120-2TE21-8AD0**		O	O

© Siemens 2022

Description ✓ Basic version | O Option | – Not available	**Instructions** (footnotes are applicable line by line)	**Article No.** **Product ID**	**Order code**	**SINUMERIK**	
				840DE sl	**840D sl**
Drives (continued)					
SINAMICS S120 booksize format Active Line Modules Internal air cooling		**6SL3130-7TE21-6AA4** **6SL3130-7TE23-6AA3** **6SL3130-7TE25-5AA3** **6SL3130-7TE28-0AA3** **6SL3130-7TE31-2AA3**		O	O
SINAMICS S120 booksize format Active Interface Modules		**6SL3100-0BE21-6AB0** **6SL3100-0BE23-6AB0** **6SL3100-0BE25-5AB0** **6SL3100-0BE28-0AB0** **6SL3100-0BE31-2AB0**		O	O
SINAMICS S120 booksize format Smart Line Modules Internal air cooling		**6SL3130-6AE15-0AB1** **6SL3130-6AE21-0AB1** **6SL3130-6TE21-6AA4** **6SL3130-6TE23-6AA3** **6SL3130-6TE25-5AA3**		O	O
SINAMICS S120 booksize format Basic Line Modules Internal air cooling		**6SL3130-1TE22-0AA0** **6SL3130-1TE24-0AA0** **6SL3130-1TE31-0AA0**		O	O
SINAMICS S120 booksize format High Frequency Drive		**6SL3125-1UE32-2AD0**		O	O
SINAMICS S120 chassis format Motor Modules Internal air cooling:					
• Rated pulse frequency 2 kHz		**6SL3320-1TE32-1AA3** **6SL3320-1TE32-6AA3** **6SL3320-1TE33-1AA3** **6SL3320-1TE33-8AA3** **6SL3320-1TE35-0AA3**		O	O
• Rated pulse frequency 1.25 kHz		6SL3320-1TE36-1AA3 6SL3320-1TE37-5AA3 6SL3320-1TE38-4AA3 6SL3320-1TE41-0AA3 6SL3320-1TE41-2AA3 6SL3320-1TE41-4AA3		–	–

© Siemens 2022

2

Description ✓ Basic version | O Option | – Not available	**Instructions** (footnotes are applicable line by line)	**Article No.** **Product ID**	**Order code**	**SINUMERIK**	
				840DE sl	**840D sl**
Drives (continued)					
SINAMICS S120 chassis format Active Line Modules Internal air cooling:					
• Up to 300 kW		**6SL3330-7TE32-1AA3** **6SL3330-7TE32-6AA3** **6SL3330-7TE33-8AA3** **6SL3330-7TE35-0AA3**		O	O
• 380 kW and higher		6SL3330-7TE36-1AA3 6SL3330-7TE37-5AA3 6SL3330-7TE38-4AA3 6SL3330-7TE41-0AA3 6SL3330-7TE41-2AA3 6SL3330-7TE41-4AA3		–	–
SINAMICS S120 chassis format Active Interface Modules		**6SL3300-7TE32-6AA1** **6SL3300-7TE33-8AA1** **6SL3300-7TE35-0AA1**		O	O
SINAMICS S120 chassis format Power Modules 400 V 3 AC Internal air cooling		6SL3310-1TE32-1AA3 6SL3310-1TE32-6AA3 6SL3310-1TE33-1AA3 6SL3310-1TE33-8AA3 6SL3310-1TE35-0AA3		–	–
SINAMICS S120 blocksize format PM240-2 Power Modules standard variant Internal air cooling	For complete Article No., see PM240-2 Power Modules Power Modules >90 kW are not permissible				
• Without integrated line filter					
- 200 ... 240 V 1 AC/3 AC		**6SL3210-1PB..-.UL0**		O	O
- 200 ... 240 V 3 AC		**6SL3210-1PC..-.UL0**		O	O
- 380 ... 480 V 3 AC		**6SL3210-1PE..-.UL.**		O	O
• With integrated line filter class A					
- 200 ... 240 V 1 AC/3 AC		**6SL3210-1PB..-.AL0**		O	O
- 200 ... 240 V 3 AC		**6SL3210-1PC..-.AL0**		O	O
- 380 ... 480 V 3 AC		**6SL3210-1PE..-.AL.**		O	O
SINAMICS S120M Distributed servo drive	For complete Article No., see SINAMICS S120M	**6SL3532-6DF71-0R..** **6SL3540-6DF71-0R..** **6SL3542-6DF71-0R..** **6SL3562-6DF71-0R..** **6SL3563-6DF71-0R..**		O	O
AM600 adapter module		**6SL3555-2BC10-0AA0**		O	O
DRIVE-CLiQ extension		**6SL3555-0AA00-6AB0**		O	O
Hybrid cabinet bushing		**6SL3555-2DA00-0AA0**		O	O

© Siemens 2022

Description ✓ Basic version | O Option | – Not available	**Instructions** (footnotes are applicable line by line)	**Article No.** **Product ID**	**Order code**	**SINUMERIK**	
				840DE sl	**840D sl**
Connectable motors					
SIMOTICS synchronous motors:	See SIMOTICS motors				
• 1FT7/1FK7 feed motors				O	O
• 1PH8/1FE1/1FE2/2SP1 main spindle motors				O	O
• 1FN3 linear motors				O	O
• 1FW6 torque motors				O	O
SIMOTICS asynchronous motors:	See SIMOTICS motors				
• 1PH8/1PH2/2SP1 main spindle motors				O	O
Connectable measuring systems					
SINAMICS S120 DRIVE-CLiQ on SIMOTICS motor:					
• Resolver				✓	✓
• sin/cos 1 V_{pp}				✓	✓
• EnDat 2.1				✓	✓
Measuring systems per axis, maximum number				2	2
Absolute encoder:					
• With DRIVE-CLiQ interface	Via SINAMICS S120			✓	✓
• Integrated in the motors SIMOTICS S-1FT7/-1FK7 and SIMOTICS M-1PH8	Via SINAMICS Sensor Module integrated in the motor			✓	✓
• With SSI interface	Via SINAMICS SMC30 Sensor Module			✓	✓
Incremental encoder:					
• Integrated in the motors SIMOTICS S-1FT7/-1FK7 and SIMOTICS M-1PH8	Via SINAMICS Sensor Modules integrated in the motor			✓	✓
Resolver:	Via SINAMICS Sensor Module:				
• Integrated in SIMOTICS S-1FK7 motors	Integrated in motor			✓	✓
• As external machine encoder	SMC10			✓	✓
Rotary measuring systems with:	Via SINAMICS Sensor Modules:				
• RS422 (TTL)	SMC30			✓	✓
• sin/cos 1 V_{pp}	SMC20/SME20			✓	✓
• Distance-coded reference marks	SMC20/SME20			✓	✓
• EnDat 2.1	SMC20/SME25			✓	✓
• EnDat 2.2	SMC40			✓	✓
Linear scale LMS with:	Via SINAMICS Sensor Modules:				
• sin/cos 1 V_{pp}	SMC20/SME20			✓	✓
• Distance-coded reference marks	SMC20/SME20			✓	✓
• EnDat 2.1	SMC20/SME25			✓	✓
• EnDat 2.2	SMC40			✓	✓

© Siemens 2022

Drive functions

Description ✓ Basic version | O Option | – Not available	**Instructions** (footnotes are applicable line by line)	**Article No.** **Product ID**	**Order code**	**SINUMERIK**	
				840DE sl	**840D sl**
Drive functions					
Voltage protection for SIMOTICS M-1PH8/1FE1/1FE2/2SP1 motors, external via Voltage Protection Module VPM:	See SIMOTICS motors				
• VPM 120		**6SN1113-1AA00-1JA1**		O	O
• VPM 200		**6SN1113-1AA00-1KA1**		O	O
• VPM 200 DYNAMIC		**6SN1113-1AA00-1KC1**		O	O
Control:				✓	✓
• Servo control				✓	✓
• Vector control				–	–
• *V*/*f* control				✓	✓
• Combination of servo/*V*/*f* control possible, e.g. on an NCU, NX or CU				–	–
• Setting the pulse frequency grid in fine steps (3.2 kHz/4 kHz/5.33 kHz/6.4 kHz/8 kHz)	Requires current control cycle of 62.5 µs or 31.25 µs in some cases.			✓	✓
• Sine-wave filter				–	–
• Unit switchover US/SI etc.				–	–
• Direction reversal without changing the setpoint				–	–
• Technology controller				–	–
• k_T estimator				–	–
• $k_T(i_q)$ characteristic				✓	✓
• Rotor/pole position identification saturation-based/motion-based				✓	✓
• Edge modulation				–	–
• Motor data identification stationary/rotating				✓	✓
• Flux reduction for asynchronous motors				✓	✓
Modular machine concept (sub-topologies):					
• Parking axis/encoder				✓	✓
Brakes:					
• Brake control:					
- Basic				✓	✓
- Advanced				✓	✓
• Armature short-circuit brake:					
- Internal				✓	✓
- External				✓	✓
• DC brake				✓	✓
Internal motor winding switchover				✓	✓
Motor changeover	General conditions to be observed			✓	✓
Suspended axis/electronic weight counterbalance				✓	✓
Dynamic energy management (DC link voltage management)				✓	✓
Runtime meter				✓	✓

© Siemens 2022

Description ✓ Basic version | O Option | – Not available	**Instructions** (footnotes are applicable line by line)	**Article No.** **Product ID**	**Order code**	**SINUMERIK**	
				840DE sl	**840D sl**
Drive functions (continued)					
I^2t motor monitoring				✓	✓
Automatic restart mechanism (servo/infeed)				–	–
Technology function: Friction characteristic				–	–
Drive Control Chart DCC	Not possible for integrated drives.	**6AU1810-1HA24-1X.0**		–	–
Drive Based Open Architecture	Drive-related functions can be developed in partnership with Siemens on request.			✓	✓
Basic positioner	Not possible for integrated drives. Included in basic scope on external SINAMICS S120 drives.			–	–
2 command data sets				–	–
Parallel connection of SINAMICS S120 Motor Modules				–	–
Maximum configuration valid for standard PROFIBUS DP cycle for:					
• Current/speed controller cycle 125 µs:					
- Axes/spindles				31	31
- Axes/spindles per NCU or NX				6	6
- Motor measuring systems and direct measuring systems per NCU or NX				12	12
• Current/speed controller cycle 62.5 µs:					
- Axes/spindles				11	11
- Axes/spindles per NCU or NX				3	3
• Current/speed controller cycle 31.25 µs:					
- Axes/spindles				1	1
• SINAMICS S120 chassis format Motor Modules per NCU or NX				6	6
Current/speed controller cycle:					
• SINAMICS S120 booksize format, minimum				31.25 µs	31.25 µs
• SINAMICS S120 chassis format, minimum				125 µs	125 µs
• Maximum				250 µs	250 µs
PROFIBUS DP cycle (corresponds to IPO cycle), minimum				0.5 ms	0.5 ms
Drive data sets, maximum number				32	32
Motor data sets, maximum number				16	16
Encoder data sets, maximum number				8	8

© Siemens 2022

Description ✓ Basic version | O Option | – Not available	**Instructions** (footnotes are applicable line by line)	**Article No.** **Product ID**	**Order code**	**SINUMERIK**	
				840DE sl	**840D sl**
Axis functions					
Traversing range				± 9 decades	± 9 decades
Rotary axis, turning endlessly				✓	✓
Velocity, maximum				300 m/s	300 m/s
Acceleration with jerk limitation				✓	✓
Programmable acceleration				✓	✓
Follow-up mode				✓	✓
Measuring systems 1 and 2, selectable				✓	✓
Feedrate interpolation				✓	✓
Separate feedrate for roundings and chamfers				✓	✓
Travel to fixed stop				✓	✓
Travel to fixed stop with Force Control		**6FC5800-0AM01-0YB0**	**M01**	O	O
Setpoint exchange		**6FC5800-0AM05-0YB0**	**M05**	O	O
Tangential control		**6FC5800-0AM06-0YB0**	**M06**	O	O
Position switching signals/cam sequencer:		**6FC5800-0AM07-0YB0**	**M07**	O	O
• Pairs, maximum				16	16
Advanced Position Control ECO		**6FC5800-0AM12-0YB0**	**M12**	O	O
Advanced Position Control APC		**6FC5800-0AM13-0YB0**	**M13**	O	O
Axis container	Within 31 axes			✓	✓
Link axes Axis container distributed among several NCUs:	Requirement: CBE30-2 communication module			✓	✓
• NCUs, maximum				3	3
Spindle functions					
Digital spindle speed				✓	✓
Spindle speed, maximum programmable range of values	Display ± 999 999 999.9999			10^6 ... 10^{-4}	10^6 ... 10^{-4}
Gear stages				5	5
Gear stage selection, automatic				✓	✓
Oriented spindle stop				✓	✓
Spindle speed limitation, minimum/maximum				✓	✓
Constant cutting rate				✓	✓
Spindle control via PLC Positioning, oscillation				✓	✓
Changeover to axis mode				✓	✓
Axis synchronization on-the-fly				✓	✓
Thread run-in and run-out, programmable				✓	✓
Thread cutting with constant or variable pitch				✓	✓
Tapping with compensating chuck/rigid tapping				✓	✓
Scalable analog setpoint*) Run MyCC /SANS	Requirement: Loadable compile cycle	**6FC5800-0AN48-0YB0**	**N48**	–	O

*) Compile cycle that is not generally released. Requires machine-specific release process.
Please contact your local Siemens sales office or Regional Company.

© Siemens 2022

Description ✓ Basic version | O Option | – Not available	**Instructions** (footnotes are applicable line by line)	**Article No.** **Product ID**	**Order code**	**SINUMERIK**	
				840DE sl	**840D sl**
Interpolations					
Floating point accuracy				✓ 80 bits	✓ 80 bits
Linear interpolating axes:				4	4
• Axes, maximum				4	20
Circle via center point and end point				✓	✓
Circle via interpolation point				✓	✓
Helical interpolation				2D+2	2D+6
Universal interpolator NURBS (non-uniform rational B splines)				✓	✓
Continuous-path mode with programmable rounding clearance				✓	✓
Compressor for 3-axis/5-axis machining				✓	✓
Continue machining at the contour (retrace support) Run MyCC /RESU	Requirements: Loadable compile cycle and cross-mode actions ASUB and synchronized actions (option M43)	**6FC5800-0AM24-0YB0**	**M24**	O	O
Spline interpolation (A, B and C splines)		**6FC5800-0AS16-0YB0**	**S16**	O	O
Polynomial interpolation		**6FC5800-0AM18-0YB0**	**M18**	O	O
Involute interpolation		**6FC5800-0AM21-0YB0**	**M21**	O	O
Multi-axis interpolation > 4 interpolating axes		**6FC5800-0AM15-0YB0**	**M15**	–	O
Crank interpolation*) Run MyCC /CRIP	Requirement: Loadable compile cycle	**6FC5800-0AN04-0YB0**	**N04**	–	O
Motion control:					
• Advanced Surface		**6FC5800-0AS07-0YB0**	**S07**	O	O
• Top Surface	Requirement: Advanced Surface (option S07)	**6FC5800-0AS17-0YB0**	**S17**	O	O
• Top Speed		**6FC5800-0AS13-0YB0**	**S13**	O	O
• Model-based (engineered motion control)*) Run MyCC /EMC Contains the option: Nodding compensation Run MyCC /NOCO (6FC5800-0AN63-0YB0/MCS2130)	Requirements: Loadable compile cycle and NCU 720.3B PN or NCU 730.3B PN	**6FC5800-0AN47-0YB0** **MCS2120**		–	O
• Intelligent adaptation of the machine's dynamic response Run MyCC /AJET	Requirements: Loadable compile cycle	**6FC5800-0AN82-0YB0** **MCS2110**		–	O
• Path acceleration limitation		**6FC5800-0AP26-0YB0**	**P26**	O	O
• SMTE cone turning		**6FC5800-0AR52-0YB0**	**R52**	O	O

*) Compile cycle that is not generally released. Requires machine-specific release process.
Please contact your local Siemens sales office or Regional Company.

© Siemens 2022

Description ✓ Basic version | O Option | – Not available	**Instructions** (footnotes are applicable line by line)	**Article No.** **Product ID**	**Order code**	**SINUMERIK**	
				840DE sl	**840D sl**
Couplings					
Pair of synchronized axes (gantry axes):		**6FC5800-0AM02-0YB0**	**M02**	O	O
• Maximum number				8	8
Leading axis/following axis for drives		**6FC5800-0AM03-0YB0**	**M03**	O	O
Generic couplings:					
• CP-Standard: - 4 axis pairs in simultaneous coupled motion				✓	✓
• CP-Static: - 1 × simple synchronous spindle, coupling ratio |1|:1, no multi-edge machining		**6FC5800-0AM75-0YB0**	**M75**	O	O
• CP-Basic: - 4 axis pairs in simultaneous coupled motion and - 1 × synchronous spindle/multi-edge turning and/or master value coupling/curve table interpolation and/or axial coupling in the machine coordinate system	1) Restricted functionality of the export version The number of simultaneously traversing axes is restricted to 4.	**6FC5800-0AM72-0YB0**	**M72**	O 1)	O
• CP-Comfort: - 4 axis pairs in simultaneous coupled motion and - 4 × synchronous spindle/multi-edge turning and/or master value coupling/curve table interpolation and/or axial coupling in the machine coordinate system and - 1 × electronic gear for 3 leading axes without curve table interpolation, without cascading	1) Restricted functionality of the export version The number of simultaneously traversing axes is restricted to 4.	**6FC5800-0AM73-0YB0**	**M73**	O 1)	O
• CP-Expert: - 8 axis pairs in simultaneous coupled motion and - 8 × synchronous spindle/multi-edge turning and/or master value coupling/curve table interpolation and/or axial coupling in the machine coordinate system and - 8 × electronic gear for 3 leading axes with curve table interpolation, with cascading and - 5 × electronic gear for 5 leading axes with curve table interpolation, with cascading	1) Restricted functionality of the export version The number of simultaneously traversing axes is restricted to 4.	**6FC5800-0AM74-0YB0**	**M74**	O 1)	O
Transformation redundant and spatially distributed axes at workpiece in Cartesian coordinate system *) Run MyCC /RDCC	Requirement: Loadable compile cycle	**6FC5800-0AN26-0YB0**	**N26**	–	O

*) Compile cycle that is not generally released. Requires machine-specific release process.
Please contact your local Siemens sales office or Regional Company.

© Siemens 2022

Description ✓ Basic version | O Option | – Not available	Instructions (footnotes are applicable line by line)	Article No. Product ID	Order code	SINUMERIK 840DE sl	840D sl
Transformations					
Cartesian Point-to-Point travel PTP				✓	✓
Concatenated transformations (inclined axis TRAANG to TRAORI/ cardanic milling head/TRANSMIT/TRACYL)				✓	✓
Generic transformation	Requirement: Machining package 5 axes (option M30) or Milling technology package SINUMERIK MDynamics 5 axes (option S33)			–	✓
TRANSMIT/cylinder surface transformation		**6FC5800-0AM27-0YB0**	**M27**	O	O
Inclined axis		**6FC5800-0AM28-0YB0**	**M28**	O	O
Angle head adapter		**6FC5800-0AM56-0YB0**	**M56**	O	O
Transformation rotating workpiece and tool*) Run MyCC /2RPT	Requirement: Loadable compile cycle	**6FC5800-0AN43-0YB0**	**N43**	–	O
Transformation DOUBLETRANSMIT*) Run MyCC /2TRA	Requirement: Loadable compile cycle	**6FC5800-0AM25-0YB0**	**M25**	–	O
Double generic transformation*) Run MyCC /DGEN	Requirement: Loadable compile cycle	**6FC5800-0AN34-0YB0**	**N34**	–	O
Transformation Dynamic Swivel TRIPOD*) Basis 5 axes Run MyCC /DSTT	Requirement: Loadable compile cycle	**6FC5800-0AM84-0YB0**	**M84**	–	O
Transformation eccentric axis*) Run MyCC /ECCA	Requirement: Loadable compile cycle	**6FC5800-0AN44-0YB0**	**N44**	–	O
Transformation eccentric*) Run MyCC /ECCE	Requirement: Loadable compile cycle	**6FC5800-0AN41-0YB0**	**N41**	–	O
Transformation HEXAPOD 6-axis transformation*) Run MyCC /HEX	Requirement: Loadable compile cycle	**6FC5800-0AM71-0YB0**	**M71**	–	O
Transformation PARACOP 3 axes Run MyCC /PACO	Requirement: Loadable compile cycle	**6FC5800-0AM44-0YB0**	**M44**	–	O
Transformation swivel axis*) Run MyCC /PIVA	Requirement: Loadable compile cycle	**6FC5800-0AN52-0YB0**	**N52**	–	O
Transformation Handling Run MyCC /RCTRA	Requirement: Loadable compile cycle	**6FC5800-0AM31-0YB0**	**M31**	–	O
Transformation robotic extended*) Run MyCC /ROBX	Requirement: Loadable compile cycle	**6FC5800-0AN54-0YB0**	**N54**	–	O
Transformation for articulated arm robots*) Run MyCC /ROBX/AR	Requirements Loadable compile cycle Multi-axis interpolation (> 4 interpolating axes) (option M15), 3 additional axes/spindles (option A03), SINUMERIK Operate /NCU (option S00), Lock MyCycles (option P54), Create MyConfig	**6FC5800-0AR05-0YB0**	**R05**	–	O
Transformation rotating eccentric*) Run MyCC /ROTE	Requirement: Loadable compile cycle	**6FC5800-0AN37-0YB0**	**N37**	–	O
Transformation pantograph kinematics*) Run MyCC /SCIS	Requirement: Loadable compile cycle	**6FC5800-0AM51-0YB0**	**M51**	–	O
Transformation TRIPOD hybrid kinematics*) Run MyCC /THYK	Requirement: Loadable compile cycle	**6FC5800-0AN36-0YB0**	**N36**	–	O
Transformation TRICEPT 5-axis transformation*) Run MyCC /TRIC	Requirement: Loadable compile cycle	**6FC5800-0AM46-0YB0**	**M46**	–	O
Transformation: Additional function 6th axis *) Run MyCC /TRA-6A	Requirement: Loadable compile cycle	**6FC5800-0AM66-0YB0**	**M66**	–	O

*) Compile cycle that is not generally released. Requires machine-specific release process.
Please contact your local Siemens sales office or Regional Company.

© Siemens 2022

Measuring – Technologies

Description ✓ Basic version | O Option | – Not available	Instructions (footnotes are applicable line by line)	Article No. Product ID	Order code	SINUMERIK 840DE sl	840D sl
Measuring					
Logging of measurement results in automatic mode				✓	✓
Measuring stage 1 Two probes (switching) with/without deletion of distance-to-go				✓	✓
Measuring stage 2 • Axial measurement • Measurements from synchronized actions • Cyclic measuring		**6FC5800-0AM32-0YB0**	**M32**	O	O
Measuring cycles for drilling/milling and turning • Calibrating workpiece probes • Workpiece measurement • Tool measurement		**6FC5800-0AP28-0YB0**	**P28**	O	O
Measure kinematics		**6FC5800-0AP18-0YB0**	**P18**	O	O
Technologies					
Handwheel override				✓	✓
Contour handwheel		**6FC5800-0AM08-0YB0**	**M08**	O	O
Punching/nibbling		**6FC5800-0AM33-0YB0**	**M33**	O	O
Slot shape recognition		**6FC5800-0AS18-0YB0**	**S18**	O	O
Balance cutting, 4-axis roughing		**6FC5800-0AS05-0YB0**	**S05**	O	O
Interpolation turning		**6FC5800-0AP57-0YB0**	**P57**	O	O
Machining package 5 axes Contains the option: Multi-axis interpolation > 4 interpolating axes	 Option M15	**6FC5800-0AM30-0YB0**	**M30**	–	O
Machining package 5 axes Additional function 7th axis		**6FC5800-0AS01-0YB0**	**S01**	–	O
Milling technology package SINUMERIK MDynamics 3 axes Contains the options: • ShopTurn/ShopMill • Residual material detection and machining for contour pockets and stock removal • 3D simulation 1 (finished part) • Simultaneous recording • Advanced Surface motion control • Spline interpolation (A, B and C splines) • TRANSMIT/cylinder surface transformation • Measuring cycles for drilling/milling and turning • Expanded HMI user memory on the CompactFlash card of the NCU	 Option P17 Option P13 Option P25 Option P22 Option S07 Option S16 Option M27 Option P28 Option P12	**6FC5800-0AS32-0YB0**	**S32**	O	O
Milling technology package SINUMERIK MDynamics 5 axes Contains the options: • Machining package 5 axes • Multi-axis interpolation > 4 interpolating axes • ShopTurn/ShopMill • Residual material detection and machining for contour pockets and stock removal • 3D simulation 1 (finished part) • Simultaneous recording • Advanced Surface motion control • Spline interpolation (A, B and C splines) • TRANSMIT/cylinder surface transformation • Measuring cycles for drilling/milling and turning • Expanded HMI user memory on the CompactFlash card of the NCU • 3D tool radius compensation • Measure kinematics	 Option M30 Option M15 Option P17 Option P13 Option P25 Option P22 Option S07 Option S16 Option M27 Option P28 Option P12 Option M48 Option P18	**6FC5800-0AS33-0YB0**	**S33**	–	O

© Siemens 2022

Description ✓ Basic version | O Option | – Not available	**Instructions** (footnotes are applicable line by line)	**Article No.** **Product ID**	**Order code**	**SINUMERIK**	
				840DE sl	**840D sl**
Technologies (continued)					
Cartesian travel to fixed stop Run MyCC /FXSC	Requirement: Loadable compile cycle	**6FC5800-0AN38-0YB0**	**N38**	–	O
Velocity adaptation for water jet cutting Run MyCC /VADA	Requirement: Loadable compile cycle	**6FC5800-0AN05-0YB0**	**N05**	–	O
Extrapolated switching signals*) Run MyCC /XOUT	Requirement: Loadable compile cycle	**6FC5800-0AN51-0YB0**	**N51**	–	O
• Maximum number				–	64
Synchronous motion Run MyCC /SYMO	Requirement: Loadable compile cycle	**6FC5800-0AN66-0YB0**	**N66**	–	O
Path-related pulse output*) Run MyCC /PRIG	Requirement: Loadable compile cycle	**6FC5800-0AN76-0YB0**	**N76**	O	O
Utility programs for the servo Run MyCC /SUTI	Requirement: Loadable compile cycle	**6FC5800-0AN10-0YB0**	**N10**	O	O
Grinding:					
• Multiple feedrates in one block, e.g. for calipers				✓	✓
• Continuous dressing, parallel dressing Online modification of tool offset				✓	✓
• Grinding Advanced Extended functions for grinding, e.g. axis-parallel dressing/pre-profiling cycle		**6FC5800-0AS35-0YB0**	**S35**	O	O
• Oscillation functions block-related, modal and asynchronous		**6FC5800-0AM34-0YB0**	**M34**	O	O
• Fast braking during grinding Run MyCC /FABS	Requirement: Loadable compile cycle	**6FC5800-0AN81-0YB0**	**N81**	–	O
• CCG compiler as DLL for SINUMERIK PCU (SIMATIC IPC for SINUMERIK)	Requirements: TRANSMIT (option M27), polynomial interpolation (option M18)	**6FC5800-0AP10-0YB0** **MCS2100**		O	O
Block change times (block processing times), typically for:	Requirement: Use of the compressor				
• NCU 710.3B PN				1.2 ms	1.2 ms
• NCU 720.3B PN				0.5 ms	0.5 ms
• NCU 730.3B PN				0.3 ms	0.3 ms
Handling package Contains the options: • 3 additional axes • 3 additional machining channels • Transformation Handling • Synchronized actions stage 2	Requirement: Loadable compile cycle Option A03 Option C13 Option M31 Option M36 No tool offsets or spindles possible	**6FC5800-0AS31-0YB0**	**S31**	–	O

*) Compile cycle that is not generally released. Requires machine-specific release process.
Please contact your local Siemens sales office or Regional Company.

© Siemens 2022

Description ✓ Basic version | O Option | – Not available	**Instructions** (footnotes are applicable line by line)	**Article No.** **Product ID**	**Order code**	**SINUMERIK**	
				840DE sl	**840D sl**
Technologies (continued)					
Easy connection of robots and handling systems SINUMERIK Run MyRobot /EasyConnect				✓	✓
Integrate KUKA robots into the operation, programming and diagnostics of the SINUMERIK 840D sl:					
• SINUMERIK Run MyRobot /Handling	Requirements: KUKA.mxAutomation 2.1 One additional machining channel (option C11), Run MyHMI /3GL (option P60), Run MyScreens (option P64)	**6FC5800-0AP72-0YB0** **MCS1190**		O	O
CNC robot integration with a SINUMERIK 840D sl with SINUMERIK Run MyRobot /Direct control[1]	Requirement: Run MyCC /ROBX/AR (option R05)			–	O
Electronic transfer CP Contains the function: I/O interfacing via PROFIBUS DP Contains the options: • Position switching signals/cam sequencer • Polynomial interpolation • Generic coupling CP-Comfort • Cross-mode actions ASUB and synchronized actions • Synchronized actions stage 2 • Pairs of synchronized axes (gantry axes)	[1] Restricted functionality of the export version The number of simultaneously traversing axes is restricted to 4. Option M07 Option M18 Option M73 Option M43 Option M36 Option M02	**6FC5800-0AM76-0YB0**	**M76**	O [1]	O
SINUMERIK plastics package IME Contains the function: Travel to fixed stop Contains the options: • 3 additional axes • Pair of synchronized axes (gantry axes) • Leading axis/following axis for drives • Position switching signals/cam sequencer • Polynomial interpolation • Transformation Handling • Synchronized actions stage 2	Option A03 Option M02 Option M03 Option M07 Option M18 Option M31 Option M36 No tool offsets or spindles possible	**6FC5800-0AS40-0YB0**	**S40**	–	O

[1] Compile cycle that is not generally released. Requires machine-specific release process.
Please contact your local Siemens sales office or Regional Company.

© Siemens 2022

Description ✓ Basic version | O Option | – Not available	**Instructions** (footnotes are applicable line by line)	**Article No.** **Product ID**	**Order code**	**SINUMERIK**	
				840DE sl	**840D sl**
Motion-synchronous actions					
CNC inputs/outputs, high-speed:					
• Digital inputs on-board				4	4
• Digital inputs or outputs on-board, total				4	4
• Expansion via SIMATIC S7 I/O	See Siemens Industry Mall or Catalog ST 70			O	O
- Digital inputs				32	32
- Digital outputs				32	32
- Analog inputs				4	4
- Analog outputs				4	4
Synchronized actions and fast auxiliary function output including 3 synchronous functions (max. 159 elements for synchronized actions)	1) Restricted functionality of the export version The number of simultaneously traversing axes is restricted to 4.			✓ 1)	✓
• Number of simultaneously active synchronous functions SYNFC				1	24
Synchronized actions stage 2	1) Restricted functionality of the export version The number of simultaneously traversing path and positioning axes is restricted to 4.	**6FC5800-0AM36-0YB0**	**M36**	O 1)	O
Positioning axes and spindles via synchronized actions (command axes)				✓	✓
Analog value control in the interpolation cycle	Requirement: Analog input			✓	✓
Path velocity-dependent analog output (laser power control)		**6FC5800-0AM37-0YB0**	**M37**	O	O
Laser switching signal, high-speed Run MyCC /HSLC	Requirement: Loadable compile cycle	**6FC5800-0AM38-0YB0**	**M38**	O	O
Clearance control:					
• 1D in interpolation cycle via synchronized actions				✓	✓
• 1D/3D clearance control in position control cycle Run MyCC /CLC	Requirement: Loadable compile cycle 1) Restricted functionality of the export version Clearance control can be applied to only one axis because 5-axis transformation is not available. The number of interpolating axes is restricted to 4 without Run MyCC /CLC and to 3 with Run MyCC /CLC.	**6FC5800-0AM40-0YB0**	**M40**	O 1)	O

© Siemens 2022

Description ✓ Basic version | O Option | – Not available	**Instructions** (footnotes are applicable line by line)	**Article No.** **Product ID**	**Order code**	**SINUMERIK** **840DE sl**	 **840D sl**
Motion-synchronous actions (continued)					
Clearance control (continued):					
• 1D/3D clearance control in position control cycle with free direction Run MyCC /CLC-FD	Requirement: Loadable compile cycle and 1D/3D clearance control in position control cycle, Run MyCC /CLC 1) Restricted functionality of the export version Clearance control can be applied to only one axis because 5-axis transformation is not available. The number of interpolating axes is restricted to 4 without Run MyCC /CLC and to 3 with Run MyCC /CLC.	**6FC5800-0AM65-0YB0**	**M65**	O 1)	O
• Clearance control Run MyCC /CLCX	Requirement: Loadable compile cycle	**6FC5800-0AN78-0YB0**	**N78**	O	O
Evaluation of internal drive variables	Required for Adaptive Control	**6FC5800-0AM41-0YB0** **MCS5100**	**M41**	O	O
Asynchronous subprograms ASUB	High-speed CNC inputs/outputs			✓	✓
Interrupt routines with fast retraction from the contour		**6FC5800-0AM42-0YB0**	**M42**	O	O
Cross-mode actions ASUB and synchronized actions in all control operating modes		**6FC5800-0AM43-0YB0**	**M43**	O	O
CNC programming language					
Programming language DIN 66025 and high-level language expansion				✓	✓
Main program call from main program and subprogram				✓	✓
Subroutine levels, maximum				16	16
Interrupt routines, maximum				2	2
Number of subprogram passes				≤ 9999	≤ 9999
Number of levels for skip blocks				0 ... 8	0 ... 8
Polar coordinates				✓	✓
1/2/3-point contours				✓	✓
Dimensions metric/inch, changeover via operator action or program				✓	✓
Inverse-time feedrate				✓	✓
Auxiliary function output via:					
• M word, maximum programmable range of values				INT 2^{31} -1	INT 2^{31} -1
• H word, maximum programmable range of values REAL ± 3.4028 ex 38	Display ± 999 999 999.9999			INT -2^{31} ... 2^{31} -1	INT -2^{31} ... 2^{31} -1

© Siemens 2022

Description ✓ Basic version | O Option | – Not available	**Instructions** (footnotes are applicable line by line)	**Article No.** **Product ID**	**Order code**	**SINUMERIK**	
				840DE sl	**840D sl**
CNC programming language (continued)					
CNC high-level language with:					
• User variables, configurable				✓	✓
• Predefined user variables (arithmetic parameters)				✓	✓
• Predefined user variables (arithmetic parameters), configurable				✓	✓
• Read/write system variables				✓	✓
• Indirect programming				✓	✓
• Program jumps and branches				✓	✓
• Program coordination with WAIT, START, INIT				✓	✓
• Arithmetic and trigonometric functions				✓	✓
• Comparison operations and logic combinations				✓	✓
• Macro techniques				✓	✓
• Control structures IF-ELSE-ENDIF				✓	✓
• Control structures WHILE, FOR, REPEAT, LOOP				✓	✓
• Commands to HMI				✓	✓
• STRING functions				✓	✓
Program functions:					
• Preprocessing memory, dynamic FIFO				✓	✓
• Look Ahead, recorded part program blocks	MDynamics, Top Surface or COMPSURF active			3000	3000
• Look Ahead, IPO blocks, buffered				1000	1000
• Frame concept				✓	✓
• Inclined-surface machining with frames				✓	✓
• Axis/spindle interchange				✓	✓
• Geometry axes, switchable online in the CNC program				✓	✓
• Program preprocessing				✓	✓
Online ISO dialect interpreter				✓	✓

© Siemens 2022

CNC programming language

Description ✓ Basic version | O Option | – Not available	**Instructions** (footnotes are applicable line by line)	**Article No.** **Product ID**	**Order code**	**SINUMERIK**	
				840DE sl	**840D sl**
CNC programming language (continued)					
Program/workpiece management:					
• Part programs on the SINUMERIK NCU, maximum	In total a maximum of 512 files per directory			1000	1000
• Workpieces on the SINUMERIK NCU, maximum	In total a maximum of 256 directories			250	250
• Workpieces on the SSD of the SINUMERIK PCU (SIMATIC IPC for SINUMERIK), maximum	In total a maximum of 10000 user files			10000	10000
• Templates for programs and workpieces				✓	✓
• Job lists				✓	✓
• On additional HMI user memory on CompactFlash card of the SINUMERIK NCU	In total a maximum of 10000 user files and directories Requirement: Additional HMI user memory on the CF card of the NCU (option P12)			✓	✓
• On additional plug-in CompactFlash card in the SINUMERIK PCU (SIMATIC IPC for SINUMERIK)	Requirement: CF card in the PCU			✓	✓
• On the integrated SSD of the SINUMERIK PCU (SIMATIC IPC for SINUMERIK)				✓	✓
• On USB storage medium, e.g. memory stick	Requirement: Memory stick			✓	✓
• On network drive				✓	✓
Basic frames, maximum				16	16
Settable offsets, maximum				100	100
Work offsets:					
• Programmable (frames)				✓	✓
• Determining – scratching				✓	✓
• External via PLC				✓	✓
User data:					
• Global and local				✓	✓
• Global program				✓	✓
Display system variables, including in online configurable display, and log them	[1] Function is dependent on operating software			[1]	[1]

© Siemens 2022

Description ✓ Basic version | O Option | – Not available	**Instructions** (footnotes are applicable line by line)	**Article No.** **Product ID**	**Order code**	**SINUMERIK**	
				840DE sl	**840D sl**
Programming support					
Program editor:					
• Text editor: selecting, copying, deleting				✓	✓
• Dual editor				✓	✓
• Multi-editor, maximum	Requirement: Operator panel ≥ 19"			4	4
• Write protection for lines				✓	✓
• Suppression of lines in the display				✓	✓
• Technology cycles:					
- Drilling				✓	✓
- Milling				✓	✓
- Pocket milling with free contour definition and islands				✓	✓
- Turning				✓	✓
- Grinding				✓	✓
programGUIDE:					
• Programming support for cycles				✓	✓
• Dynamic programming graphics				✓	✓
• Animated elements				✓	✓
DXF Reader, integrated: • Accepting contours • Accepting point patterns		**6FC5800-0AP56-0YB0** **MCS4130**		O	O
ShopTurn/ShopMill: • Machining step programming • Multiple clamping of identical/different workpieces • Manual machine		**6FC5800-0AP17-0YB0**	**P17**	O	O
programSYNC		**6FC5800-0AP05-0YB0**	**P05**	O	O
Residual material detection and machining for contour pockets and stock removal		**6FC5800-0AP13-0YB0**	**P13**	O	O
Optimize MyProgramming /3D Scanner Faster and more reliable programming of contour and stock removal cycles		**6FC5800-0AP70-0YH0**	**P70**	O	O
Programming support is expandable, e.g. user cycles	See Run MyScreens			✓	✓
Access protection for cycles Lock MyCycles					
• OEM cycle protection Lock MyCycles		**6FC5800-0AP54-0YB0** **MCS1100**	**P54**	O	O

© Siemens 2022

Simulations – Operating modes

Description ✓ Basic version | O Option | – Not available	**Instructions** (footnotes are applicable line by line)	**Article No.** **Product ID**	**Order code**	**SINUMERIK**	
				840DE sl	**840D sl**
Simulations					
Machining channels capable of simulation, maximum	Requirement: programSYNC (option P05)			4	4
Simulation of program X, while program Y is being executed	Requirement: NCU 720.3B PN or NCU 730.3B PN			✓	✓
Quickview for mold-making programs				✓	✓
Turning/drilling/milling:					
• Turning				✓	✓
• Counterspindle				✓	✓
• Turn-milling				✓	✓
• Mill-turning with supported kinematics	Application-specific by machine manufacturer			✓	✓
• Milling up to 5-axis machining with TRAORI				✓	✓
• 2D simulation (finished part)				✓	✓
• 3D simulation 1 (finished part)		**6FC5800-0AP25-0YB0**	**P25**	O	O
• Simultaneous recording (real-time simulation of current machining operation)		**6FC5800-0AP22-0YB0**	**P22**	O	O
Operating modes					
JOG CNC operating mode:				✓	✓
• Handwheel selection				✓	✓
• Inch/metric changeover				✓	✓
• Manual measurement of work offset				✓	✓
• Manual measurement of tool offset				✓	✓
• Automatic tool measurement				✓	✓
• Automatic workpiece measurement				✓	✓
• Reference point approach automatically or via CNC program				✓	✓
• Repos (repositioning on the contour) via operator action/semiautomatically/program				✓	✓
MDI CNC operating mode (Manual Data Input):				✓	✓
• Input in text editor				✓	✓
• Save MDI program				✓	✓
• Teach positions in MDI buffer				✓	✓
• Teach-in function Handling				✓	✓

© Siemens 2022

Description ✓ Basic version | O Option | – Not available	**Instructions** (footnotes are applicable line by line)	**Article No.** **Product ID**	**Order code**	**SINUMERIK**	
				840DE sl	**840D sl**
Operating modes (continued)					
AUTO CNC operating mode:				✓	✓
• Execute with external call:					
- From the storage medium to the USB interface	Requirement: SINUMERIK TCU/PCU (SIMATIC IPC for SINUMERIK)			✓	✓
- From the HMI user memory on the SSD	Requirement: SINUMERIK PCU (SIMATIC IPC for SINUMERIK)			✓	✓
- From the network drive				✓	✓
• Execute directly:					
- From expanded CNC user memory	Requirement: CNC user memory expanded (option P77)			O	O
- From CNC user memory on CompactFlash card of the NCU	Requirement: Additional HMI user memory on CF card of the NCU (option P12)			O	O
- From external storage, e.g. local network, server, USB storage medium or memory stick Contains the option: CNC user memory, expanded for programs and OEM cycles	Option P77	**6FC5800-0AP75-0YB0** **MCS5110**	**P75**	O	O
- One part program memory for several NCUs	Requirement: Execution from external storage (EES) (option P75)			O	O
• DRF offset				✓	✓
• Program control				✓	✓
• Program editing				✓	✓
• Block search with/without calculation				✓	✓
• Overstore				–	–
• Configured stop		**6FC5800-0AS24-0YB0**	**S24**	O	O

© Siemens 2022

Description ✓ Basic version | O Option | – Not available	**Instructions** (footnotes are applicable line by line)	**Article No.** **Product ID**	**Order code**	**SINUMERIK**	
				840DE sl	**840D sl**
Tools					
Tool types:					
• Drilling/milling				✓	✓
• Turning				✓	✓
• Groove sawing				✓	✓
• Grinding				✓	✓
• Nibbling	Not in SINUMERIK Operate			–	–
Tool radius compensations in plane with:					
• Approach and retract strategies				✓	✓
• Transition circle or transition ellipse at outside corners				✓	✓
Configurable intermediate blocks with tool radius compensation active				✓	✓
3D tool radius compensation		**6FC5800-0AM48-0YB0**	**M48**	O	O
Tool change via T number				✓	✓
Tool carrier with orientation capability				✓	✓
Look-ahead detection of contour violations				✓	✓
Grinding wheel peripheral speed, programmable				✓	✓
Tool orientation interpolation	Requirement: Milling technology package SINUMERIK MDynamics 5 axes (option S33) or machining package 5 axes (option M30)			–	✓
Tool length compensation, online				✓	✓
Operation without magazine management:				✓	✓
• Tool offset selection via D number without T-assignment (flat D number)				–	–
• Editing of tool data				✓	✓
• Tool offset selection via T and D numbers				✓	✓
• Tools in the tool list:					
- NCU 710.3B PN				600	600
- NCU 720.3B PN				600	600
- NCU 730.3B PN				1500	1500
• Cutting edges in the tool list:					
- NCU 710.3B PN				1500	1500
- NCU 720.3B PN				1500	1500
- NCU 730.3B PN				3000	3000

© Siemens 2022

Description ✓ Basic version | O Option | – Not available	**Instructions** (footnotes are applicable line by line)	**Article No.** **Product ID**	**Order code**	**SINUMERIK**	
				840DE sl	**840D sl**
Tools (continued)					
Operation with tool management:					
• Up to 4 magazines				✓	✓
• With more than 4 magazines		**6FC5800-0AM88-0YB0**	**M88**	O	O
• Monitoring for maximum tool speed/acceleration		**6FC5800-0AS08-0YB0**	**S08**	O	O
• System displays in standard software				✓	✓
• User-friendly commissioning via system displays				✓	✓
• Tool list				✓	✓
• Configurable tool list				✓ 1	✓ 1
• Tools in the tool list:					
- NCU 710.3B PN				600	600
- NCU 720.3B PN				600	600
- NCU 730.3B PN				1500	1500
• Cutting edges in the tool list:					
- NCU 710.3B PN				1500	1500
- NCU 720.3B PN				1500	1500
- NCU 730.3B PN				3000	3000
• Tool offset selection via T and D numbers				✓	✓
• Editing of tool data				✓	✓
• Editing of OA data				✓	✓
• Magazine list				✓	✓
• Configurable magazine list				✓	✓
• Magazines, maximum:					
- NCU 710.3B PN				32	32
- NCU 720.3B PN				32	32
- NCU 730.3B PN				64	64
• Magazine locations, maximum:					
- NCU 710.3B PN				600	600
- NCU 720.3B PN				600	600
- NCU 730.3B PN				1500	1500
• Magazine data				✓	✓
• Empty location search and place positioning				✓	✓
• Easy empty location search using softkeys				✓	✓
• Loading and unloading of tools				✓	✓
• More than one loading and unloading point per magazine				✓	✓
• Tool life monitoring and workpiece count				✓	✓
• Multi-tool with tools, maximum				64	64
• Adapter data				✓	✓
• Location-dependent offsets				✓	✓
Identify tool demand		**6FC5800-0AM77-0YB0**	**M77**	O	O
Tool identification for loading/unloading tools with code carrier	See Siemens Industry Mall				
• Tool Ident Connection		**6FC5800-0AP52-0YB0** **MCS5130**		O	O

© Siemens 2022

Communication and data management

Description ✓ Basic version | O Option | – Not available	**Instructions** (footnotes are applicable line by line)	**Article No.** **Product ID**	**Order code**	**SINUMERIK**	
				840DE sl	**840D sl**
Communication and data management					
Data on storage medium at:					
• USB interface on the rear of the TCU/PCU, e.g. memory stick	2 plant HMIs can be accessed per plant network			✓	✓
• USB interface on the operator panel front, e.g. memory stick	2 plant HMIs can be accessed per plant network			✓	✓
Manage additional drives via:					
• Ethernet				4	4
• USB				✓	✓
• CompactFlash card of the PCU (SIMATIC IPC for SINUMERIK)				✓	✓
COM (RS232C) serial interface	Requirement: PCU (SIMATIC IPC for SINUMERIK) or COM01.3 module for NCU			✓	✓
I/O interfacing via PROFIBUS DP				✓	✓
Reading of actual positions correlated with output signal Run MyCC /COPA *)	Requirement: Loadable compile cycle	**6FC5800-0AN61-0YB0**	**N61**	O	O
Data backup:					
• CompactFlash card of the NCU (backup/restore) on memory stick or in network				✓	✓
• On the integrated SSD of the SINUMERIK PCU (SIMATIC IPC for SINUMERIK)				✓	✓
• With Ghost (backup/restore) on the SINUMERIK PCU (SIMATIC IPC for SINUMERIK) or in the network				✓	✓
Host computer connection Server for OPC UA in SINUMERIK Operate Access MyMachine:	See Engineering software				
• Access MyMachine /OPC UA	License for NCU	**6FC5800-0AP67-0YB0**	**P67**	O	O
Variables, maximum number				200	200

*) Compile cycle that is not generally released. Requires machine-specific release process.
Please contact your local Siemens sales office or Regional Company.

© Siemens 2022

Description ✓ Basic version | O Option | – Not available	**Instructions** (footnotes are applicable line by line)	**Article No.** **Product ID**	**Order code**	**SINUMERIK**	
				840DE sl	**840D sl**
Operation					
Operator panels *blackline plus* in neutral design					
SIMATIC Industrial Thin Client for SINUMERIK:					
• SIMATIC ITC1500, 15", multi-touch, neutral		**6AV6646-1BA15-0NA0**		O	O
• SIMATIC ITC1900, 19", multi-touch, neutral		**6AV6646-1BA18-0NA0**		O	O
• SIMATIC ITC2200, 22", multi-touch, neutral		**6AV6646-1BA22-1NA0**		O	O
SIMATIC panels for SINUMERIK					
• SIMATIC IFP1500 V2 extended neutral, 15"		**6AV7863-5MA10-2NA0**		O	O
• SIMATIC IFP1900 V2 extended neutral, 19"		**6AV7863-6MA10-2NA0**		O	O
• SIMATIC IFP2200 V2 extended neutral, 22"		**6AV7863-4MA10-2NA0**		O	O
• SIMATIC IFP2400 V2 extended neutral, 24"		**6AV7863-7MA10-2NA0**		O	O
- Display port cable	Length 3 m (9.84 ft) Length 5 m (16.4 ft)	**6AV7860-0DH30-0AA0** **6AV7860-0DH50-0AA0**		O O	O O
- USB cable	Length 3 m (9.84 ft) Length 5 m (16.4 ft)	**6AV7860-0CH30-0AA0** **6AV7860-0CH50-0AA0**		O O	O O
- Cable set for SIMATIC IFP.... V2 extended neutral consisting of: CAT6 cable, host module V2 (HDBaseT)	Length 10 m (32.8 ft) Length 15 m (49.2 ft) Length 20 m (65.6 ft) Length 30 m (98.4 ft)	**6AV7860-1EX21-0AB1** **6AV7860-1EX21-5AB1** **6AV7860-1EX22-0AB1** **6AV7860-1EX23-0AB1**		O O O O	O O O O
SIMATIC panels with integrated IPC for SINUMERIK	Requirement: SINUMERIK PCU base software /IPC (option P86)				
• SIMATIC IPC477E, Celeron G3902E, 15", Windows 10, multi-touch, neutral		**6AV7241-1WA07-0FA0**		O	O
• SIMATIC IPC477E, Core i3-6102E, 19", Windows 10, multi-touch, neutral		**6AV7241-3XB07-0FA0**		O	O
• SIMATIC IPC477E, Core i3-6102E, 22", Windows 10, multi-touch, neutral		**6AV7241-3YA07-0FA0**		O	O
• SIMATIC IPC477E, Core i5-6442EQ, 24", Windows 10, multi-touch, neutral		**6AV7241-5SB07-0FA0**		O	O
SIMATIC IPC for SINUMERIK:	Requirement: SINUMERIK PCU base software /IPC (option P86)				
• SIMATIC IPC427E, Celeron G3902E, Windows 10		**6AG4141-1AA17-0FA0**		O	O
• SIMATIC IPC427E, Core i5-6442EQ, Windows 10		**6AG4141-5AB17-0FA0**		O	O
• SIMATIC IPC427E Celeron G3902E, Windows 10, with installed PCU base software		**6AG4141-1DA17-0FX0**		O	O
• SIMATIC IPC427E Core i5-6442EQ, Windows 10, with installed PCU base software		**6AG4141-5DB17-0FX0**		O	O
- DIN rail mounting kit for SIMATIC IPC427E		**6ES7648-1AA21-0YM0**		O	O
- Mounting kit for wall mounting for SIMATIC IPC427E		**6ES7648-1AA20-0YN0**		O	O
- Mounting kit for portrait mounting for SIMATIC IPC427E		**6ES7648-1AA20-0YP0**		O	O

© Siemens 2022

2

Description ✓ Basic version | O Option | – Not available	**Instructions** (footnotes are applicable line by line)	**Article No.** **Product ID**	**Order code**	**SINUMERIK**	
				840DE sl	**840D sl**
Operation (continued)					
SINUMERIK machine control panels *blackline plus*	For operator panels *blackline plus*				
• SINUMERIK MCP 398C	For 15", 19", 22", 24" operator panels	**6FC5303-0AF25-0AA0**		O	O
- EM 66 expansion module	For 19" operator panels	**6FC5303-0AF30-0AA0**		O	O
- EM 131 expansion module	For 22" operator panels	**6FC5303-0AF31-0AA0**		O	O
- EM 187 expansion module	For 24" operator panels	**6FC5303-0AF28-0AA0**		O	O
Operator panel fronts in *blackline* design with integrated SINUMERIK TCU:					
• SINUMERIK OP 015 black, 15.6", multi-touch, capacitive keys and capacitive display area		**6FC5303-0AF14-0AA0**		O	O
Operator panel fronts in classic design Operator panel front with integrated SINUMERIK TCU:					
• SINUMERIK OP 08T, 7.5", membrane keys		**6FC5203-0AF04-1BA1**		O	O
Operator panel fronts without integrated SINUMERIK TCU:					
• SINUMERIK OP 010 with LED backlight, 10.4", membrane keys		**6FC5203-0AF00-0AA3**		O	O
• SINUMERIK OP 010S, 10.4", mechanical keys		**6FC5203-0AF04-0AA0**		O	O
• SINUMERIK OP 010C, 10.4", mechanical keys		**6FC5203-0AF01-0AA0**		O	O
• SINUMERIK OP 012 with LED backlight, 12.1", membrane keys and touch pad		**6FC5203-0AF02-0AA2**		O	O
• SINUMERIK OP 015A with LED backlight, 15", membrane keys and mouse		**6FC5203-0AF05-0AB1**		O	O
• Accessories for operator panel fronts:					
- SINUMERIK TCU 30.3 for operator panel fronts		**6FC5312-0DA00-1AA1**		O	O
• Additional components for SINUMERIK TCU 30.3:	See Siemens Industry Mall or Catalog IK PI				
- Switch SCALANCE XB005 unmanaged		**6GK5005-0BA00-1AB2**		O	O
- Switch SCALANCE X005 unmanaged		**6GK5005-0BA10-1AA3**		O	O
- Switch SCALANCE XC108 unmanaged		**6GK5108-0BA00-2AC2**		O	O
- Switch SCALANCE XC208 managed		**6GK5208-0BA00-2AC2**		O	O
- Switch SCALANCE X208 PRO managed		**6GK5208-0HA10-2AA6**		O	O
Accessories for operator panels:					
• Mounting clips service package	For SIMATIC IFP and SIMATIC IPC 477E	**6AV6671-8XK00-0AX3**		O	O
• USB interface for mounting in control cabinet, with connection between cabinet mounting component and the USB connector	Length 1 m	**6FC5347-0AF01-1AA0**		O	O

© Siemens 2022

Description ✓ Basic version | O Option | – Not available	**Instructions** (footnotes are applicable line by line)	**Article No.** **Product ID**	**Order code**	**SINUMERIK**	
				840DE sl	**840D sl**
Operation (continued)					
Assembly materials for SINUMERIK TCU:					
• Mounting bracket for TCU behind operator panel front		**6FC5248-0AF20-2AA0**		O	O
SINUMERIK Operate Display Manager	Single license without data storage medium Requirements: SINUMERIK Operate /PCU (option P88) or SINUMERIK Operate /PC (option P87) or SINUMERIK Operate /NCU (option S00) in combination with NCU 720.3B and NCU 730.3B	**6FC5800-0AP81-0YB0**	**P81**	O	O
Machine operation with SINUMERIK Operate /NCU	Single license without data storage medium	**6FC5800-0AS00-0YB0**	**S00**	O	O
Machine operation with SINUMERIK Operate /universal client	Single license without data storage medium For general panels	**6FC5800-0AS87-0YB0**	**S87**	O	O
Software for machine operation with SIMATIC IPC for SINUMERIK:	SINUMERIK Operate, see CNC software DVD-ROM				
• SINUMERIK PCU base software /IPC Provide SINUMERIK PCU functions on a defined SIMATIC IPC	Single license without data storage medium Requirement: SIMATIC IPC for SINUMERIK	**6FC5800-0AP86-0YB0**	**P86**	O	O
• Machine operation with SINUMERIK Operate /PCU	Single license without data storage medium Requirement: SINUMERIK PCU base software /IPC	**6FC5800-0AP88-0YB0**	**P88**	O	O
Software for machine operation with PC Machine operation with SINUMERIK Operate /PC:	SINUMERIK Operate, see CNC software DVD-ROM				
• License key on CompactFlash card of the NCU	Single license without data storage medium For general PCs	**6FC5800-0AP87-0YB0**	**P87**	O	O
• License key locally on the PC	Single license without data storage medium For general PCs alternative to option P87	**6FC5860-2YF00-1YB0**		O	O

© Siemens 2022

Description ✓ Basic version | O Option | – Not available	**Instructions** (footnotes are applicable line by line)	**Article No.** **Product ID**	**Order code**	**SINUMERIK**	
				840DE sl	**840D sl**
Operation (continued)					
Software for SIMATIC Comfort Panel KTP900F Mobile/ TP1200 for machine operation with TRANSLINE HMI Lite	Single license on DVD-ROM Current software version	**6FC5263-0PY11-0AG0**		O	O
	Single license on DVD-ROM SW version 8.1 SP1	**6FC5263-8PY11-1AG0**		O	O
	Copy single license without data storage medium	**6FC5263-0PY11-0AG1**		O	O
Connections for					
• SIMATIC Comfort Panel	Requirements: SIMATIC WinCC and Run MyHMI /SIMATIC OP			✓	✓
• SIMATIC Mobile Panel	Requirements: SIMATIC WinCC and Run MyHMI /SIMATIC OP			✓	✓
• SIMATIC Industrial Thin Client ITC 1200/1500/1900 Touch via Industrial Ethernet				✓	✓
Control unit management:					
• Identical display on all OPs with TCU:				✓	✓
- Simultaneous operation interlock				✓	✓
- Activate/deactivate MCP/MPP				✓	✓
- Different resolutions, e.g. SINUMERIK OP 010/OP 012				✓	✓
- Up to 2 operator panel fronts, each with one TCU on an NCU 710.3B PN				✓	✓
- Up to 4 operator panel fronts, each with one TCU on an NCU 720.3B PN/NCU 730.3B PN				✓	✓
- Up to 4 operator panel fronts, each with one TCU on a PCU (SIMATIC IPC) plus 1 additional operator panel front directly on the PCU (SIMATIC IPC)				✓	✓
- From 2/4 operator panel fronts, as many operator panel fronts as required due to intelligent suppression				✓	✓
• One or several TCUs which can be switched over several NCUs and PCUs (IPCs)				✓	✓
• One HMI switchable via several NCUs				✓	✓
• One integrated HMI and one SINUMERIK Operate simultaneously on one NCU	Only for loading/unloading tools			✓	✓
Operation via a VNC viewer				✓	✓

© Siemens 2022

Description ✓ Basic version | O Option | – Not available	**Instructions** (footnotes are applicable line by line)	**Article No.** **Product ID**	**Order code**	**SINUMERIK**	
				840DE sl	**840D sl**
Operation (continued)					
Machine control panels:					
• SINUMERIK MCP 310C PN		**6FC5303-0AF23-0AA1**		O	O
• SINUMERIK MCP 310 PN		**6FC5303-0AF23-1AA1**		O	O
• SINUMERIK MCP 483C PN		**6FC5303-0AF22-0AA1**		O	O
• SINUMERIK MCP 483 PN		**6FC5303-0AF22-1AA1**		O	O
• Accessories for machine control panels:					
- Emergency stop mushroom pushbutton, latching, red, 22 mm		**6FC5347-0AF20-1AA1**		O	O
- Contact block		**6FC5347-0AF20-2AA1**		O	O
- Cable set for additional control devices		**6FC5247-0AA35-0AA0**		O	O
- Spindle/rapid traverse override electronic rotary switch, 1 × 16G, T=24, cap, button, pointer, rapid-traverse and spindle dials		**6FC5247-0AF12-1AA0**		O	O
- Feedrate/rapid traverse override electronic rotary switch, 1 × 23G, T=32, cap, button, pointer, rapid-traverse and feedrate dials		**6FC5247-0AF13-1AA0**		O	O
Machine Push Button Panel MPP with machine control panel functions:					
• SINUMERIK MPP 310 IEH with port for SINUMERIK HT 2 /HT 8		**6FC5303-1AF20-8AA1**		O	O
• SINUMERIK MPP 483 IE		**6FC5303-1AF10-0AA0**		O	O
• SINUMERIK MPP 483 IEH with port for SINUMERIK HT 2/HT 8		**6FC5303-1AF10-8AA0**		O	O
Interface for customer machine control panel SINUMERIK MCP Interface PN		**6FC5303-0AF03-0AA0**		O	O
Handheld units:					
• SINUMERIK HT 2 handheld terminal:		**6FC5303-0AA00-2AA0**		O	O
- Magnetic clamp for HT 2		**6FC5348-0AA08-0AA0**		O	O
- Holder for HT 2		**6FC5348-0AA08-1AA0**		O	O
- Slide-in labels, inscribable (3 A4 sheets)		**6FC5348-0AA08-2AA0**		O	O
• SINUMERIK HT 8 handheld terminal		**6FC5403-0AA20-0AA1**		O	O
• SINUMERIK HT 8 handheld terminal with handwheel		**6FC5403-0AA20-1AA1**		O	O
• SINUMERIK HT 10 handheld terminal		**6FC5403-0AA21-0AA1**		O	O
• SINUMERIK HT 10 handheld terminal with handwheel		**6FC5403-0AA21-1AA1**		O	O
• Accessories for HT 8 handheld terminals:					
- Touch pen with holding loop		**6FC5348-0AA08-4AA0**		O	O
- Wall holder		**6AV6574-1AF04-4AA0**		O	O
• Accessories for HT 10 handheld terminals:					
- Touch pen system		**6AV6881-0AV21-0AA0**		O	O
- Wall holder		**6FC5348-0AA20-0AA0**		O	O
- Connection box standard		**6AV2125-2AE13-0AX0**		O	O
- Connection box advanced		**6AV2125-2AE23-0AX0**		O	O

© Siemens 2022

2

Description ✓ Basic version | O Option | – Not available	**Instructions** (footnotes are applicable line by line)	**Article No.** **Product ID**	**Order code**	**SINUMERIK**	
				840DE sl	**840D sl**
Operation (continued)					
• Accessories for HT 2/HT 8/HT 10 handheld terminals:					
- Spiral connection cable		**6FC5348-0AA08-3AA0**		O	O
- Basic PN connection module without emergency stop override for mounting in the control cabinet with terminating plug		**6FC5303-0AA01-1AA0**		O	O
• Mini handheld unit with coiled connecting cable		**6FX2007-1AD03**		O	O
• Mini handheld unit with straight cable		**6FX2007-1AD13**		O	O
• Accessories for mini handheld units:					
- Connection kit		**6FX2006-1BG03**		O	O
Electronic handwheels:	Third handwheel can be operated as contour hand-wheel			2 (3)	2 (3)
• With 120 mm × 120 mm front panel, 5 V DC		**6FC9320-5DB01**		O	O
• With 76.2 mm × 76.2 mm front panel, 5 V DC		**6FC9320-5DC01**		O	O
• With 76.2 mm × 76.2 mm front panel, 24 V DC, HTL		**6FC9320-5DH01**		O	O
• Without front panel, without setting wheel, 5 V DC		**6FC9320-5DF01**		O	O
• Without front panel, with setting wheel, 5 V DC		**6FC9320-5DM00**		O	O
• Portable in housing, 2.5 m spiral cable, 5 V DC:		**6FC9320-5DE02**		O	O
- Flange socket for portable handwheel		**6FC9341-1AQ**		O	O
Keyboards:					
• SINUMERIK KB 310C		**6FC5203-0AF21-0AA1**		O	O
• SINUMERIK KB 483C		**6FC5203-0AF20-0AA1**		O	O
Electronic Key System EKS	Single license without data storage medium	**6FC5800-0AP53-0YB0**	**P53**	O	O
Memory and storage devices:					
• CompactFlash card:					
- 2 GB		**6FC5313-5AG00-0AA2**		O	O
- 8 GB		**6FC5313-6AG00-0AA0**		O	O
• USB flash drive 32 GB	With SINUMERIK PCU (SIMATIC IPC)	**6AV6881-0AS42-0AA1**		O	O
Plain text display of user variables				✓	✓
Multi-channel display:					
• Number of machining channels				3	3
Workpiece-related actual value system				✓	✓
Menu selection via the PLC				–	–
CNC program messages				✓	✓
Access protection				7 levels	7 levels

© Siemens 2022

Description ✓ Basic version | O Option | – Not available	**Instructions** (footnotes are applicable line by line)	**Article No.** **Product ID**	**Order code**	**SINUMERIK**	
				840DE sl	**840D sl**
Operation (continued)					
Operating software languages:					
• Additional languages	Software versions available on request	**6FC5800-0AN00-0YB0**	**N00**	O	O
• Language switchover online				✓	✓
• Chinese Simplified, English, French, German, Italian, Spanish				✓	✓
• Installed languages, maximum	Unlimited for SINUMERIK PCU (SIMATIC IPC for SINUMERIK)			8	8
Language extensions for the operating software SINUMERIK Operate and SINUMERIK 840D sl:	On DVD-ROM without license				
• Bulgarian, Chinese Traditional, Croatian, Czech, Danish, Dutch, Finnish, Greek, Hindi, Hungarian, Indonesian, Japanese, Korean, Malay, Polish, Portuguese/Brazilian, Romanian, Russian, Swedish, Slovak, Slovene, Tamil, Thai, Turkish, Vietnamese	Further languages and software versions available on request	**6FC5860-0YC44-0YA8**		O	O

© Siemens 2022

Monitoring functions

Description ✓ Basic version | O Option | – Not available	**Instructions** (footnotes are applicable line by line)	**Article No.** **Product ID**	**Order code**	**SINUMERIK**	
				840DE sl	**840D sl**
Monitoring functions					
Working area limitation				✓	✓
Limit switch monitoring Software and hardware limit switches				✓	✓
Position monitoring				✓	✓
Standstill monitoring				✓	✓
Clamping monitoring				✓	✓
2D/3D protection areas				✓	✓
Path length evaluation		**6FC5800-0AM53-0YB0** **MCS3100**	**M53**	O	O
Contour monitoring				✓	✓
Contour monitoring with tunnel function		**6FC5800-0AM52-0YB0**	**M52**	O	O
Axis limitation from the PLC				✓	✓
Spindle speed limitation				✓	✓
Integrated spindle monitor (S-Monitor)	Requirement: WEISS spindle sensor module	**6FC5800-0AP55-0YB0**	**P55**	O	O
Collision avoidance:					
• Collision avoidance Protect MyMachine /3D Primitives	From CNC SW 4.8 SP1 Requirement: NCU 710.3B (NCU 720.3B or NCU 730.3B recommended)	**6FC5800-0AS03-0YB0** **MCS4120**		O	O
• Collision avoidance Protect MyMachine /3D STL	From CNC SW 4.5 SP2 Requirement: NCU 720.3B (NCU 730.3B recommended)	**6FC5800-0AS02-0YB0** **MCS4100**		O	O
• Collision avoidance Protect MyMachine /Open	From CNC SW 4.8 SP2 Requirements: SIMATIC IPC427E ModuleWorks package (ModuleWorks GmbH) OPC UA	**6FC5800-0AS04-0YB0** **MCS4110**		O	O
• Collision protection Protect MyMachine /CC Axis Monitor	Requirement: Loadable compile cycle	**6FC5800-0AN06-0YB0** **MCS4140**		–	O
Extended stop and retract ESR, drive-autonomous		**6FC5800-0AM60-0YB0**	**M60**	O	O
Extended stop and retract ESR, CNC-controlled and drive-autonomous		**6FC5800-0AM61-0YB0**	**M61**	O	O
Tool monitoring and diagnostics:					
• Integrated tool monitoring and diagnostics IMD LIGHT*) Run MyCC /IMD-L	Requirement: Loadable compile cycle	**6FC5800-0AN12-0YB0** **MCS3120**		O	O
• Integrated tool monitoring and diagnostics IMD BASE Run MyCC /IMD	Requirement: Loadable compile cycle	**6FC5800-0AN13-0YB0** **MCS3130**		O	O

*) Compile cycle that is not generally released. Requires machine-specific release process.
Please contact your local Siemens sales office or Regional Company.

© Siemens 2022

Description ✓ Basic version | O Option | – Not available	**Instructions** (footnotes are applicable line by line)	**Article No.** **Product ID**	**Order code**	**SINUMERIK**	
				840DE sl	**840D sl**
Compensations					
Backlash compensation				✓	✓
Leadscrew/measuring system error compensation				✓	✓
Feedforward control:					
• Velocity-dependent				✓	✓
• Acceleration-dependent				✓	✓
Weight counterbalance, electronic	Basic function of SINAMICS S120			✓	✓
Temperature compensation				✓	✓
Quadrant error compensation				✓	✓
Circularity test				✓	✓
Friction compensation, optimized		**6FC5800-0AS06-0YB0**	**S06**	O	O
Leadscrew error compensation, bidirectional	1) Restricted functionality of the export version The correctable tolerance band is restricted to 1 mm.	**6FC5800-0AM54-0YB0**	**M54**	O 1)	O
Sag compensation, multi-dimensional	1) Restricted functionality of the export version The correctable tolerance band is restricted to 1 mm.	**6FC5800-0AM55-0YB0**	**M55**	O 1)	O
Nodding compensation ECO		**6FC5800-0AS20-0YB0**	**S20**	O	O
Nodding compensation ADVANCED		**6FC5800-0AS21-0YB0**	**S21**	O	O
Nodding compensation Run MyCC /NOCO	Requirement: Loadable compile cycle	**6FC5800-0AN63-0YB0** **MCS2130**		–	O
Universal spatial compensation interface*) Run MyCCI /UCI	Requirement: Create MyCC	**6FC5800-0AN75-0YB0**	**N75**	–	O
Spatial compensation for 3 axes Run MyCC /VCS-A3	Requirement: Loadable compile cycle	**6FC5800-0AN15-0YB0**	**N15**	–	O
Spatial compensation for 5 axes Run MyCC /VCS-A5	Requirement: Loadable compile cycle	**6FC5800-0AN16-0YB0**	**N16**	–	O
Spatial compensation for 5 axes plus Run MyCC /VCS-A5 plus	Requirement: Loadable compile cycle	**6FC5800-0AN17-0YB0**	**N17**	–	O
Spatial compensation for 2 axes*) Run MyCC /VCS-ROT	Requirement: Loadable compile cycle	**6FC5800-0AN31-0YB0**	**N31**	–	O
Vibration extinction Run MyCC /VIBX	Requirement: Loadable compile cycle	**6FC5800-0AN11-0YB0**	**N11**	–	O
Cogging torque compensation axis/spindle, each additional	Alternative to option N46	**6FC5800-0AD50-0YB0**	**D51 ... D59**	O	O
Magnetic cogging torque compensation*) Run MyCC /COCO	Requirement: Loadable compile cycle	**6FC5800-0AN46-0YB0**	**N46**	–	O
Compensation of a forced mechanical coupling in the machine coordinate system*) Run MyCC /AXCO	Requirement: Loadable compile cycle	**6FC5800-0AM81-0YB0**	**M81**	–	O
Intelligent Load Control		**6FC5800-0AS11-0YB0**	**S11**	O	O
Intelligent Dynamic Control (IDC)		**6FC5800-0AS23-0YB0**	**S23**	O	O

*) Compile cycle that is not generally released. Requires machine-specific release process.
Please contact your local Siemens sales office or Regional Company.

© Siemens 2022

Programmable logic controller PLC

Description ✓ Basic version | O Option | – Not available	Instructions (footnotes are applicable line by line)	Article No. Product ID	Order code	SINUMERIK 840DE sl	 840D sl
Programmable logic controller PLC					
Expansion of the PLC user memory by 128 KB in each case		**6FC5800-0AD10-0YB0**	**D11 ... D18**	O	O
PLC user memory, maximum				1536 KB	1536 KB
SIMATIC S7-300 PLC 317F-3PN/DP integrated				✓	✓
Execution time for:					
• bit operations, minimum				0.025 µs	0.025 µs
• word operations, minimum				0.03 µs	0.03 µs
SIMATIC STEP 7 programming language:					
• Ladder diagram LAD				O	O
• Function block diagram FBD				O	O
• Statement list STL				O	O
• Structured Control Language SCL	Add-on package for SIMATIC STEP 7			O	O
• Continuous Function Chart CFC	Add-on package for SIMATIC STEP 7			O	O
• GRAPH	Add-on package for SIMATIC STEP 7			O	O
PLC programming with HiGraph	Add-on package for SIMATIC STEP 7			O	O
Distributed I/O via PROFIBUS DP:	See Siemens Industry Mall or Catalog ST 70				
• Via integrated interface, data transfer rate up to				12 Mbps	12 Mbps
• Distributed PROFIBUS DP slaves, maximum	In total on DP1 and DP2			124	124
Distributed I/O via PROFINET:	See Siemens Industry Mall or Catalog ST 70				
• Via integrated interface, data transfer rate up to				100 Mbps	100 Mbps
• Distributed PROFINET slaves, maximum				128	128
PROFINET CBA				✓	✓
PROFINET IO controller				✓	✓
PROFINET IO device				✓	✓
Digital inputs Number can be adjusted between 0 and 4049 bytes	Number = process image inputs			1024 bytes	1024 bytes
Digital outputs Number can be adjusted between 0 and 4049 bytes	Number = process image outputs			1024 bytes	1024 bytes
Peripheral inputs:	Logical address range inputs			8192 bytes	8192 bytes
• Usable, maximum				5700 bytes	5700 bytes
Peripheral outputs:	Logical address range inputs			8192 bytes	8192 bytes
• Usable, maximum				5700 bytes	5700 bytes

© Siemens 2022

Description ✓ Basic version | O Option | – Not available	**Instructions** (footnotes are applicable line by line)	**Article No.** **Product ID**	**Order code**	**SINUMERIK**	
				840DE sl	**840D sl**
Programmable logic controller PLC (continued)					
Bit memory				4096 bytes	4096 bytes
Timers				512	512
Counters				512	512
FBs:				2048	2048
• Largest number per FB				7999	7999
FC:				2048	2048
• Largest number per FC				7999	7999
DB:				2048	2048
• Largest number				16000	16000
Cyclic function blocks				✓	✓
Time-controlled function blocks				✓	✓
SINUMERIK PP 72/48D PN I/O module	Quantity limited by I/O quantity structure of PLC	**6FC5311-0AA00-0AA0**		O	O
SINUMERIK PP 72/48D 2/2A PN I/O module	Quantity limited by I/O quantity structure of PLC	**6FC5311-0AA00-1AA0**		O	O
Safety functions					
SINUMERIK Safety Integrated Drive-based safety functions for personnel and machine protection:					
• Safe Torque Off (STO)				✓	✓
• Safe Brake Control (SBC)				✓	✓
• Safe Stop 1 (SS1) time-controlled				✓	✓

© Siemens 2022

2

Description ✓ Basic version | O Option | – Not available	Instructions (footnotes are applicable line by line)	Article No. Product ID	Order code	SINUMERIK 840DE sl	840D sl
Safety functions (continued)					
SINUMERIK Safety Integrated NCU-integrated Safety functions for with safe programmable logic for personnel and machine protection:	Requirement: Safety Integrated with safe programmable logic SPL				
• Safe shutdown - stops					
- Stop A				O	O
- Stop B (SS1) time and velocity controlled				O	O
- Stop C (SS2)				O	O
- Stop D (SS2e)				O	O
- Stop E				O	O
- Stop F				O	O
• Safe Torque Off (STO)				O	O
• Safe Operating Stop (SOS)				O	O
• Safely-Limited Speed (SLS)				O	O
• Safe Speed Monitor $n < n_x$ (SSM)				O	O
• Safe Acceleration Monitor (SAM)				O	O
• Safely-Limited Position (SLP)				O	O
• Safe Cams (SCA)				O	O
• Safety-related input/output signals (SGE/SGA)				O	O
• Safe Programmable Logic (SPL)				O	O
• Safe Brake Management (SBM)				O	O
- Safe Brake Control (SBC)				O	O
- Safe Brake Test (SBT) - diagnostic function				O	O
• Safety-related communication via standard bus (PROFIsafe with SIMATIC ET 200 range)	See Siemens Industry Mall or Catalog ST 70			O	O
• Safe integration of sensors via SIMATIC DP/AS-i F-Link	See Siemens Industry Mall or Catalog IK PI			O	O
SINUMERIK Safety Integrated with safe programmable logic SPL:					
• For 1 NCU including 1 axis/spindle - SI-Basic	SPL inputs/outputs	**6FC5800-0AM63-0YB0**	**M63**	O 4/4	O 4/4
- SI-Comfort	SPL inputs/outputs	**6FC5800-0AM64-0YB0**	**M64**	O 64/64	O 64/64
- SI-High Feature	SPL inputs/outputs Requirement: NCU 720.3B PN or NCU 730.3B PN	**6FC5800-0AS68-0YB0**	**S68**	O 192/192	O 192/192
• SI axis/spindle extra for each additional axis/spindle extended motion monitoring functions for 1 axis/spindle		**6FC5800-0AC70-0YB0**	**C71 ... C78**	O	O
• SI axis/spindle package additional 15 axes/spindle extended motion monitoring functions for 15 axes/spindles		**6FC5800-0AC60-0YB0**	**C61, C62**	O	O
• SI-Connect Extended safety-related communication to 16 connections		**6FC5800-0AS67-0YB0**	**S67**	O	O
Safety Integrated acceptance test executed automatically with:					
• SinuCom NC SI	Requirement: SinuCom NC			O	O
• SINUMERIK Operate	As from SW version 4.7 SP4			✓	✓

© Siemens 2022

Description ✓ Basic version | O Option | – Not available	**Instructions** (footnotes are applicable line by line)	**Article No.** **Product ID**	**Order code**	**SINUMERIK**	
				840DE sl	**840D sl**
Safety functions (continued)					
SINUMERIK Safety Integrated plus Use of the integrated F-PLC for controlling the drive-integrated safety function for personnel and machine protection Extended Safety Integrated functions:	As from SW version 4.8 SP2 As from HW version 3B of the NCU				
• Safe Torque Off (STO)				✓	✓
• Safe Brake Control (SBC)				✓	✓
• Safe Stop 1 (SS1) time-controlled				✓	✓
• Safe shutdown - stops				O	O
- Stop A				O	O
- Stop B (SS1) time and velocity controlled				O	O
- Stop C (SS2)				O	O
- Stop D (SS2e)				O	O
- Stop E				O	O
- Stop F				O	O
• Safe Operating Stop (SOS)				O	O
• Safely-Limited Speed (SLS)				O	O
• Safe Speed Monitor (SSM)				O	O
• Safe Acceleration Monitor (SAM)				O	O
• Safely-Limited Position (SLP)				O	O
• Safe Cam (SCA)				O	O
• Safe Position (SP)				O	O
• Transfer of safe position values (SP)				O	O
• Safely-Limited Speed (SLS), encoderless				O	O
• Safe Direction (SDI)				O	O
• Safe Brake Management (SBM)				O	O
- Safe Brake Control (SBC)				O	O
- Safe Brake Test (SBT) - diagnostic function				O	O
• Safety-related communication via standard bus (PROFIsafe with SIMATIC ET 200 range)	See Siemens Industry Mall or Catalog ST 70			O	O
• Safe integration of sensors via SIMATIC DP/AS-i F-Link	See Siemens Industry Mall or Catalog IK PI			O	O
SINUMERIK Safety Integrated plus:					
• SI-Logic Enabling of the F-PLC integrated in the SINUMERIK for failsafe programming		**6FC5800-0AS60-0YB0**	**S60**	O	O
• SI axis/spindle Extended motion monitoring functions for 1 axis/spindle	Requirement: Safety Integrated plus /SI-Logic	**6FC5800-0AK00-0YB0**	**K01 ... K09**	O	O
• SI multi-axis package Extended motion monitoring functions for all axes/spindles activated in the SINUMERIK	Requirement: Safety Integrated plus /SI-Logic	**6FC5800-0AS61-0YB0**	**S61**	O	O
Safety Integrated acceptance test executed automatically with:					
• SINUMERIK Operate	Requirement: SINUMERIK Operate SW version 4.8 SP2 and higher			✓	✓

© Siemens 2022

Engineering

Description ✓ Basic version | O Option | – Not available	**Instructions** (footnotes are applicable line by line)	**Article No.** **Product ID**	**Order code**	**SINUMERIK**	
				840DE sl	**840D sl**
Engineering					
Integrated commissioning for the SINUMERIK CNC and the SINAMICS S120 drive system	Requirement: SINUMERIK Operate			✓	✓
Commissioning functions for the SINAMICS S120 drive system Auto Servo Tuning AST, fully automatic speed and position controller optimization:	Requirement: SINUMERIK Operate			✓	✓
• Single-axis optimization, incl. gantry axes				✓	✓
• Speed controller optimization, incl. current setpoint filter setting				✓	✓
• Position controller optimization, incl. speed setpoint filter setting				✓	✓
• Setting of feedforward control				✓	✓
• Overview of optimization results				✓	✓
• Closed circuit can be manually tuned according to Bode plot				✓	✓
• Optimization of path interpolation				✓	✓
• Assignment of torque feedforward control				✓	✓
• Complete user strategy, freely parameterizable				✓	✓
• Forward and backward navigation during optimization, re-optimization of speed controller				✓	✓
• Generation of reports, single axis and path interpolation				✓	✓
• Optimization project can be loaded and optimized offline on the PC				✓	✓
Call Auto Servo Tuning from part program AST call	Requirement: SINUMERIK Operate	**6FC5800-0AS10-0YB0**	**S10**	O	O
Trace	Requirement: SINUMERIK Operate			✓	✓
Circularity test	Requirement: SINUMERIK Operate			✓	✓
Measuring functions for manual drive optimization				✓	✓
Series commissioning via:					
• USB interface with storage medium, e.g. memory stick				✓	✓
• Network drive				✓	✓
• Programming of the CompactFlash card, offline or online	Requirement: Additional HMI user memory on the CF card of the NCU (option P12)			✓	✓
SINUMERIK Toolbox	On DVD-ROM of the CNC software			O	O
SIMATIC STEP 7 software on PC/PG for commissioning of the PLC	See Siemens Industry Mall			O	O
Series production and software upgrade Create MyConfig on DVD-ROM	Single license SW version 4.7 SP2	**6FC5862-2YC44-0YA0** **MCS1020**		O	O
STARTER commissioning tool for SINAMICS and MICROMASTER	For topology and diagnostics	6SL3072-0AA00-0AG0		–	–

© Siemens 2022

Description ✓ Basic version | O Option | – Not available	**Instructions** (footnotes are applicable line by line)	**Article No.** **Product ID**	**Order code**	**SINUMERIK**	
				840DE sl	**840D sl**
Engineering (continued)					
SinuCom commissioning and service tools for SINUMERIK 840D sl:	For commissioning and optimization				
• Software for PC/PG	Single license Current software version	**6FC5250-0AY00-0AG0**		O	O
	Single license SW release 7.7	**6FC5250-7AY00-7AG0**		O	O
	Update on order SW release 7.7	**6FC5250-7AY00-7AG3**		O	O
• SinuCom NC Dialog-based parameterization of machine data, management of series start-up files, integrated online help for functions, machine data and alarms:				✓	✓
- SinuCom NC Trace Dynamic recording of variables and signals, optimization without additional oscilloscope				✓	✓
- SinuCom NC SI supports the machine manufacturer in automating the Safety Integrated acceptance test				✓	✓
• SinuCom FFS Create an image for the PC card of the NCU of SINUMERIK 840D sl				–	–
• SinuCom CFS Create an image for the CF card in Ext3 format				✓	✓
• SinuCom ARC Read, delete, insert and change series start-up files				✓	✓
• Commissioning software for SINAMICS S120				–	–
Alarms and messages				✓	✓
Action log can be activated for diagnostic purposes	Logbook for alarms and keys.			✓	✓
Machine logbook, electronic				✓	✓
Trace: CNC, PLC and drives				✓	✓
Easy Message (SMS service)				–	–
PLC status	Via SIMATIC STEP 7 on PG/PC always possible			✓	✓
SIMATIC STEP 7 for SINUMERIK hardware for service functions	With SINUMERIK PCU (IPC)				
	Single license without data storage medium	**6FC5252-0AY00-0AG1** **MCS1070**		O	O
	Single license Current software version	**6FC5252-0AY00-0AG0**		O	O
	Single license SW release 5.6	**6FC5252-5AY01-6AG0**		O	O

© Siemens 2022

Description ✓ Basic version | O Option | – Not available	Instructions (footnotes are applicable line by line)	Article No. Product ID	Order code	SINUMERIK 840DE sl	840D sl
Engineering software					
Remote diagnostics, data transfer and commissioning support Access MyMachine:					
• Access MyMachine /P2P	License for NCU	**6FC5800-0AP30-0YB0** **MCS3140**	**P30**	O	O
• Access MyMachine /P2P for PC/PG Always permits data transfer between PC/PG and CNCs	Requirement for image transmission by modem: Access MyMachine /P2P				
	Single license Current software version	**6FC5860-7YC00-0YA0** **MCS31401**		O	O
	Single license SW release 4.8	**6FC5860-7YC45-0YA0**		O	O
Program screens, operating areas and user interfaces Create MyHMI /3GL:					
• Programming package Create MyHMI /3GL Software for PC on DVD-ROM	Single license SW version 4.95	**6FC5861-1YC46-5YA0** **MCS1200**		O	O
	SW update service	**Maintenance package**		O	O
• Use extended HMI applications Run MyHMI /3GL		**6FC5800-0AP60-0YB0** **MCS1110**	**P60**	O	O
Configure screens and operating areas Create MyHMI:	OEM contract required				
• Create MyHMI /WinCC Software for PC on DVD-ROM	Single license Current software version	**6FC5861-3YC00-0YA0**		O	O
	Single license SW version 15.1	**6FC5861-3YC45-2YA0** **MCS1210**		O	O
	Single license without data storage medium	**6FC5861-3YP00-0YB0** **MCS1210**		O	O
	SW update service	**6FC5861-3YP00-0YL8** **Maintenance package**		O	O
• Expand operating area in SINUMERIK Operate Run MyHMI /WinCC	Requirement: SINUMERIK Operate on PCU (IPC) or PC	**6FC5800-0AP61-0YB0** **MCS1160**		O	O
• User interface on SIMATIC Panel Run MyHMI /SIMATIC OP for SIMATIC Comfort and Mobile Panels	Requirement: SIMATIC Panel	**6FC5800-0AP03-0YB0** **MCS1150**		O	O
Configure screens and user interfaces Run MyHMI /WinCC Frame	as from SW version 4.8 SP2				
• Run MyHMI /WinCC Frame IPC	Requirement: SIMATIC IPC for SINUMERIK	**6FC5800-0AP62-0YB0** **MCS1170**		O	O
• Run MyHMI /WinCC Frame universal	Requirement: PC	**6FC5800-0AP63-0YB0**	**P63**	O	O
Integrate screens with variable layout in SINUMERIK Operate Create MyHMI /PRO:					
• Software on DVD-ROM	Without license Current software version	**6FC5867-3YC00-0YA8**		O	O
	Without license SW version 9.4	**6FC5867-3YC84-0YA8**		O	O
• Use standardized and freely configurable operating screens in SINUMERIK Operate for machine operation, Run MyHMI /PRO	Single license without data storage medium	**6FC5800-0AP47-0YB0** **MCS1130**	**P47**	O	O

© Siemens 2022

Description ✓ Basic version | O Option | – Not available	**Instructions** (footnotes are applicable line by line)	**Article No.** **Product ID**	**Order code**	**SINUMERIK**	
				840DE sl	**840D sl**
Engineering software (continued)					
Integrate screens in SINUMERIK Operate Run MyScreens:					
• Free screens				5	5
• > 5 screens, extended functions		**6FC5800-0AP64-0YB0**	**P64**	O	O
Integrate OEM-specific solutions in the CNC kernel Create MyCC:	OEM contract required				
• CNC kernel openness Create MyCC		On request		–	O
• Execute compile cycles Run MyCC	Requirement: Create MyCC	On request		–	O
Integrate OEM-specific solutions in the CNC kernel based on customer-specific solutions Create MyCCI:					
• Openness in the CNC kernel based on Create MyCCI	COA contract required	On request		O	O
• Openness in the CNC kernel based on Create MyCCI /Interpreter	COA contract required	On request		O	O
• Universal spatial compensation interface*) Run MyCCI /UCI	Requirement: Create MyCC	**6FC5800-0AN75-0YB0**	**N75**	–	O
• COA interface for compiled OEM cycles*) Run MyCCI /COOC	Requirement: Create MyCC	**6FC5800-0AM67-0YB0**	**M67**	O	O
Boost productivity					
CNC program transfer Manage MyPrograms:					
- Machine Connect	Single license per machine Current software version	**6FC5864-1AP00-0YB0** **MCS5010**		O	O
	Single license per machine SW version 4.1	**6FC5864-1AP41-0YB0** **MCS5010**		O	O
Tool management functions for individual machines and networked machines Manage MyTools:					
• Manage MyTools – individual machine				✓	✓
• Manage MyTools – networked machine:					
- Machine Connect	Single license per machine Current software version	**6FC5864-2AP00-0YB0** **MCS5020**		O	O

*) Compile cycle that is not generally released. Requires machine-specific release process.
Please contact your local Siemens sales office or Regional Company.

© Siemens 2022

Boost manufacturing productivity – Boost service productivity

Description ✓ Basic version | O Option | – Not available	**Instructions** (footnotes are applicable line by line)	**Article No.** **Product ID**	**Order code**	**SINUMERIK**	
				840DE sl	**840D sl**
Boost productivity (continued)					
Optimum utilization of the machinery Analyze MyPerformance:					
• Machine Connect	Single license per machine Current software version	**6FC5864-3AP00-0YB0** **MCS2020**		O	O
	Single license per machine SW version 4.1	**6FC5864-3AP41-0YB0**		O	O
• Server Access	SW update service per year	**6FC5864-3AP00-0YM0** **MCS2020**		O	O
Condition-oriented maintenance Analyze MyCondition /Local:					
• Machine Connect	Single license per machine Current software version	**6FC5864-7LP00-0YB0** **MCS2013**		O	O
	Single license per machine SW version 4.1	**6FC5864-7LP41-0YB0**		O	O
- Server Access	SW update service per year	**6FC5864-7LP00-0YM0** **Maintenance package**		O	O

© Siemens 2022

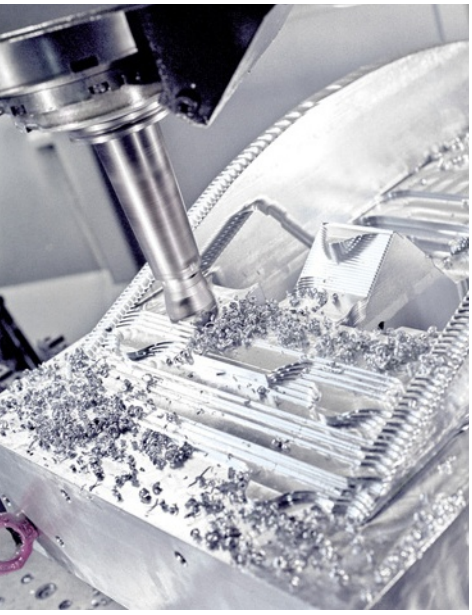

3/2 The user interface for efficient machine operation

3/3 Operator control and programming
3/4 SINUMERIK Operate operating software
3/6 TRANSLINE HMI for SINUMERIK 840D sl

3/8 Operator components for CNCs
3/8 Introduction
3/11 Operator panels for SINUMERIK
3/11 SIMATIC IPC for SINUMERIK
3/13 SINUMERIK TCU 30.3
3/16 Operator panel fronts blackline plus
3/16 SIMATIC Industrial Thin Client for SINUMERIK
3/18 SIMATIC Industrial Flat Panel for SINUMERIK
3/20 SIMATIC Panel with integrated IPC for SINUMERIK
3/23 Operator panel fronts blackline
3/23 SINUMERIK OP 015 black
3/25 Operator panel fronts in classic design
3/25 SINUMERIK OP 08T
3/27 SINUMERIK OP 010 with LED backlight
3/28 SINUMERIK OP 010S
3/29 SINUMERIK OP 010C
3/30 SINUMERIK OP 012 with LED backlight
3/31 SINUMERIK OP 015A with LED backlight
3/32 Handheld units
3/32 SINUMERIK HT 2
3/34 SINUMERIK HT 8
3/36 SINUMERIK HT 10
3/38 Mini handheld unit
3/40 Electronic handwheel
3/44 Machine control panels
3/44 Machine control panel blackline plus
3/44 SINUMERIK MCP 398C
3/46 Machine control panels in classic design
3/46 SINUMERIK MCP 310C PN
3/48 SINUMERIK MCP 310 PN
3/50 SINUMERIK MCP 483C PN
3/52 SINUMERIK MCP 483 PN
3/54 SINUMERIK MPP 310 IEH
3/55 SINUMERIK MPP 483 IE/MPP 483 IEH
3/57 SINUMERIK MCP Interface PN
3/58 SINUMERIK expansion panel
3/59 SIRIUS ACT 3SU1
3/59 Laser inscriptions

3/60 Keyboards
3/60 SINUMERIK KB 310C
3/61 SINUMERIK KB 483C
3/62 RAWE Electronic GmbH – Full CNC QWERTY 483 keyboard
3/63 Storage devices
3/63 SINUMERIK CompactFlash card
3/64 SIMATIC USB flash drive
3/65 Industrial switches
3/65 Industrial Ethernet switches – SCALANCE
3/67 Housing systems
3/67 Siemens control panel solutions
3/69 Rittal command panel systems
3/71 ROSE industrial housing systems

Part 9 **Drive Technology Configurator selection tool**
Guided product selection through to exact article number.
www.siemens.com/dt-configurator

© Siemens 2022

Overview

SINUMERIK Operate – perfect for all programming tasks

With various programming methods, SINUMERIK supports all worldwide promoted CNC programming methods – from single part production to mass production.

For mass production ...

Shortest machining times for mass production combined with the greatest degree of flexibility for special applications: SINUMERIK CNCs make this possible with advanced CNC programming with high-level language elements.
With programGUIDE, SINUMERIK CNC programs can be easily combined with powerful technology and measuring cycles. Even classic ISO codes can be programmed. This makes SINUMERIK especially attractive to operators who prefer this classic type of program.

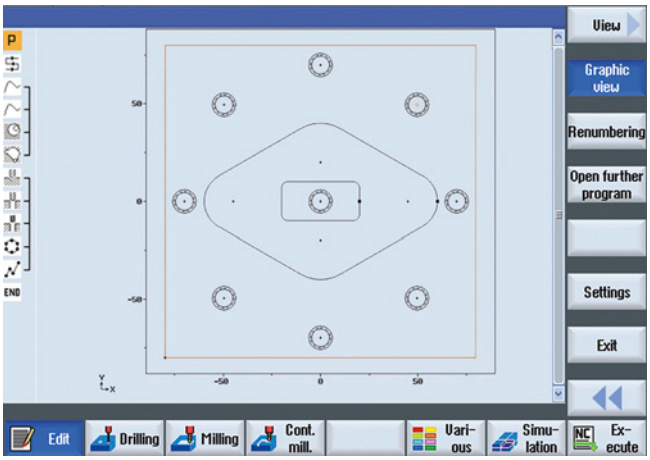

... and small series

The programming times is a crucial productivity factor for small series and single parts. ShopMill and ShopTurn machining step programming is unbeatable in these fields. Processes such as drilling, centering, plunging and pocket milling are represented as machining steps. In this way, CNC programs are extremely compact and easily read, even for complex machining operations. All geometric elements in a CNC program are shown to scale thanks to the dynamic broken-line graphics, the only one of its kind on the market.

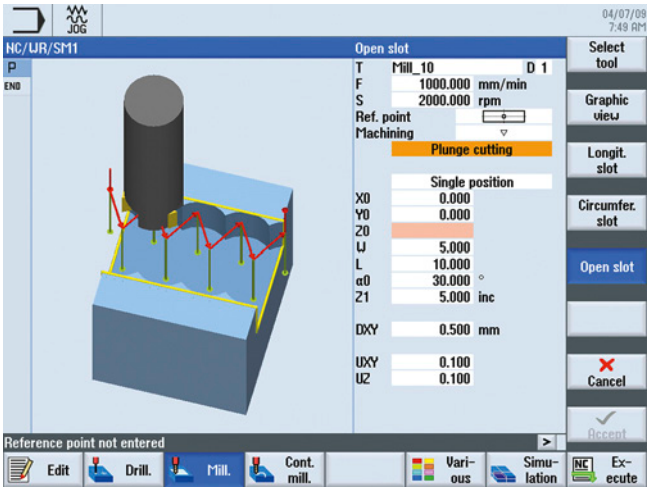

Process safety through CNC simulation

SINUMERIK CNC simulation guarantees maximum process safety by using the real geometries of the loaded tools. Of course the simulation displays an exact image of the desired machining – not just brilliant 3D representations. SINUMERIK CNC simulation simulates every type of machining, such as face and cylinder surfaces, swiveled workpiece planes or even machining in multiple machining channels. Even very large part programs can be displayed on screen within seconds with the Quickview for mold-making.

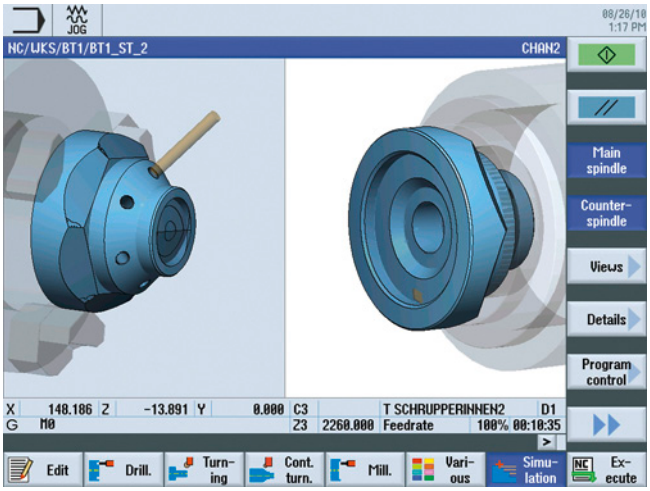

© Siemens 2022

Overview

User-friendly operating and programming made easy

The SINUMERIK Operate user interface offers many new, high-performance functions. This means that machining step and high-level language programming can be combined under a single system user interface, allowing for very fast, efficient and intuitive CNC programming and work preparation.

Operation

The numerous functions in SINUMERIK Operate ensure a high level of user-friendliness for the SINUMERIK controls. These include:

- Modern touch and gesture control
- Working with animated elements
- Pre-configured side screen

Setup

Thanks to an intelligent JOG mode and intuitive tool management in SINUMERIK Operate, all of the typical setup functions feature interactive, graphical support. This reduces the unproductive time to an absolute minimum.

- **Measuring**: The measuring of tools and workpieces is optimally supported in the intelligent JOG mode.
- **Zero points**: Integrated measuring cycles ensure the accuracy of the workpieces in the running machining process. Tool geometries or zero offsets are corrected fully automatically.
- **Optimizing programs** when running in several channels
- **Tool management**: Tool data and magazine position information is displayed very clearly on one screen.
- **Operator protection**: The intelligent system functions of SINUMERIK Safety Integrated allow user-friendly operation with the highest degree of safety for the operator and the machine.

Programming

SINUMERIK Operate offers the right programming for each task: DIN ISO for large series and the shortest cycle times and graphical programming for faster programming times for individual parts.

- **CNC high-level language**: Uniquely fast programming of multi-version workpieces and full flexibility in the workpiece spectrum
- **ProgramGUIDE**: User-friendly combination of SINUMERIK CNC programs with high-performance technology and measuring cycles
- **Machining step programming(ShopMill/ShopTurn)**: Fast and easy programming of complex components, input and programming of each contour directly at the machine by means of a SINUMERIK contour calculator

Diagnostics

Machine failures can lead to serious losses in production, particularly in large series manufacturing. In case of an incident, SINUMERIK Operate provides intelligent diagnostic resources to ensure that machines can be made operationally ready again as quickly as possible. In addition to tools for bus diagnostics of drive, I/O and network components, a powerful trace function is available for recording and diagnosing NC, PLC and drive signals.

© Siemens 2022

3

Overview

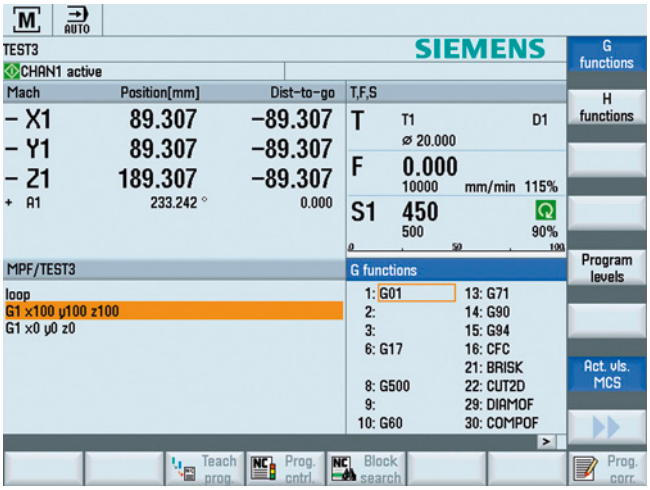

The CNC user interface for efficient machine operation

The modern SINUMERIK Operate operating software is a technology-neutral, multi-channel operating software for:

- Machine operation
- Programming
- Diagnostics
- Startup

It permits user-friendly, practice-oriented operation of the machine, from production to the workshop.

Programming of the part programs is optimally supported by a modern text editor with integrated programGUIDE with Animated Elements. The integrated powerful contour calculator enables programming and graphic display of complex workpiece contours. Processes such as drilling, centering, plunging or pocket milling are represented as machining steps in a simple and clear manner. Part programs can be rapidly checked using the 2D/3D simulation for turning and milling.

The user interface can be modified or redesigned easily.

Benefits

- Simple and quick to master
- Operate and program intuitively and clearly with animated elements
- CNC programming for the highest degree of productivity using programGUIDE
- Machining step programming for the shortest programming time with ShopMill/ShopTurn
- Help always available from help texts for each edit box on the operator screen form, and functions for efficient production, e.g. Help key, tooltips, search shortcut CTRL+F, UNDO
- Confident programming supported by simulation
- Open for user-generated screens and user-defined operating philosophies and concepts

Function

- Modern text editor with many helpful functions
- ProgramGUIDE with Animated Elements – perfect support for integrating cycles in part programs
- Shopfloor-oriented technology cycles for drilling, milling, and turning
- Comprehensive measuring cycles (option)
- Automatic creation of measurement records
- Residual material detection and machining for contour pockets and stock removal (option)
- Powerful contour computer for entering any contours, from simple to very complex ones
- Comprehensive machining step programming with ShopMill/ShopTurn (option)
- Support of swivel heads and swivel tables
- Multiple clamping of identical or different workpieces (ShopMill/ShopTurn is required)
- Quickview for mold-making programs
- Quick checking of part programs
  - Integrated 2D simulation for turning and milling
  - 3D simulation (option)
- Simultaneous recording of current machining (option)
- Integrated tool management for one magazine, more than 4 magazine tables (option)
- Access to external programs through network drives
- Data storage and execution from external memories (option)
- Implement user-defined operating philosophies and concepts with SINUMERIK Integrate Create MyHMI (option)
- Powerful new functions support the entire workflow:
  - Set-up, programming, tool and program management for complete machining
  - Multi-channel capability with ShopTurn for multi-channel machines, including program synchronization with programSYNC, and much more
  - Display and analysis of energy consumption

Integration

The SINUMERIK Operate operating software is a component of the CNC software with:

- SINUMERIK 840D sl:
  NCU 710.3B PN/NCU 720.3B PN/NCU 730.3B PN

The separate SINUMERIK Operate operating software can be used for:

- SIMATIC IPC Windows 10
- PC with Windows 10 (64-bit) operating system

© Siemens 2022

Selection and ordering data

Description	Article No.
SINUMERIK Operate operating software For SIMATIC IPC Windows 10 Languages: Chinese Simplified, English, French, German, Italian, Spanish	Is supplied with CNC software on DVD-ROM.
• Using SINUMERIK Operate /NCU Software option Single license without data storage medium	**6FC5800-0AS00-0YB0**
• Using SINUMERIK Operate /Universal Client Software option Single license without data storage medium	**6FC5800-0AS87-0YB0**
SINUMERIK Operate operating software For PC with Windows 10 (64-bit) Languages: Chinese Simplified, English, French, German, Italian, Spanish	
• Using SINUMERIK Operate /PC software option Single license without data storage medium	**6FC5800-0AP87-0YB0**
• Using SINUMERIK Operate /PC (ALM) software option local Automation License Manager Delivery of a license	**6FC5860-2YF00-1YB0**
Accessories	
Language extensions[1] On DVD-ROM Without license Languages: Bulgarian, Chinese Traditional, Croatian, Czech, Danish, Dutch, Finnish, Greek, Hindi, Hungarian, Indonesian, Japanese, Korean, Malay, Polish, Portuguese/Brazilian, Romanian, Russian, Swedish, Slovak, Slovene, Tamil, Thai, Turkish, Vietnamese • For SINUMERIK 840D sl up to software version 4.5 SP2 • For SINUMERIK Operate operating software up to software version 2.7	**6FC5860-0YC44-0YA8**
Additional languages Use of language extensions Software option • Single license without data storage medium	**6FC5800-0AN00-0YB0**

Description	Article No.
Accessories *(continued)*	
HMI user memory Additionally on CF card of NCU Software option • Single license without data storage medium	**6FC5800-0AP12-0YB0**
Residual material detection and machining for contour pockets and stock removal Software option • Single license without data storage medium	**6FC5800-0AP13-0YB0**
ShopMill/ShopTurn Machining step programming Software option • Single license without data storage medium	**6FC5800-0AP17-0YB0**
DXF Reader Software option • Single license without data storage medium	**6FC5800-0AP56-0YB0** Product ID: MCS4130
Simultaneous recording of current machining Real-time simulation of current machining Software option • Single license without data storage medium	**6FC5800-0AP22-0YB0**
3D simulation 1 (finished part) Simulation of finished part Software option • Single license without data storage medium	**6FC5800-0AP25-0YB0**
Display Manager Integration of 3rd-party applications in the operator interface Software option • Single license without data storage medium	**6FC5800-0AP81-0YB0**
Execution from external storage EES for example from local network, server, USB Software option • Single license without data storage medium	**6FC5800-0AP75-0YB0** Product ID: MCS5110

[1] Please inquire about available software versions.

© Siemens 2022

Overview

The SINUMERIK Create MyHMI /PRO configuration system together with the SINUMERIK Run MyHMI PRO software option for SINUMERIK ONE and SINUMERIK 840D sl provides a machine user interface for operator control and monitoring tasks in mass production, such as for flexible lines, machining centers and assembly lines. SINUMERIK Run MyHMI /PRO standardizes the operation of machines with diverse tasks and technologies by means of operating screen forms and a parameterizable navigation menu.

The technology-specific operating screen forms are combined into function groups, e.g.:

- Machine functions:
  Workpiece counting, cycle times, workpiece overview
- Help texts
- EE@Transline (energy efficiency)
- Overviews
- Tool changing functions
- Setup/manual operation functions

Prepared diagnostics functions support rapid fault localization in the event of a machine fault.

Application

	Hardware	CNC software option
Create MyHMI /PRO	SINUMERIK Operate • For SINUMERIK 840D sl NCU 710.3B PN NCU 720.3B PN NCU 730.3B PN IPC4x7E Windows 10 Siemens PC systems with Windows 10 64-bit	Run MyHMI /PRO Software option **P47**

Function

Diverse target hardware is supported to ensure the best possible price/performance ratio for different applications.

Applications created with SINUMERIK Create MyHMI /PRO can be executed on NCUs with ITC or IPC4x7E with the software option SINUMERIK Run MyHMI /PRO in SINUMERIK Operate.

TRANSLINE HMI Lite is available for SIMATIC-based systems with the SIMATIC Panels KTP900F Mobile, SIMATIC Comfort Panel TP1200, SIMATIC Comfort Panel PRO TP1900 or SIMATIC IPC477E.

The standard application is easy to adapt or expand and is therefore ideally suited for implementing customized versions for project-specific use.

SINUMERIK Create MyHMI /PRO

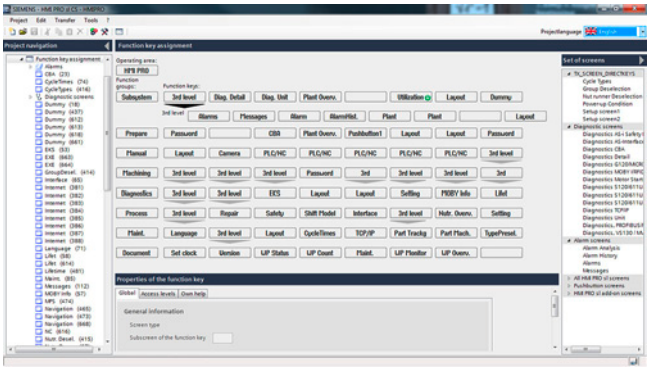

HMI PRO CS (configuration software)

© Siemens 2022

Function

HMI PRO RT (runtime software)

The screen forms for SINUMERIK Run MyHMI /PRO can be parameterized, configured, and loaded into the target hardware with the configuration software that is executable on PGs/PCs. Two diagnostics functions are available for the process error diagnostics integrated into SINUMERIK Run MyHMI /PRO. Process error diagnostics are used in combination with S7-PDIAG and S7-GRAPH.

Constraint:
It is possible to integrate the diagnostic screens of WinCC Advanced for process fault diagnostics of a SIMATIC S7-1500 with SINUMERIK Run MyHMI /PRO. The integrated process fault diagnostics of SINUMERIK Run MyHMI /PRO cannot be used with this configuration.

Users can freely configure their own operator screen forms using the simple, integrated graphic editor.

TRANSLINE HMI Lite

TRANSLINE HMI Lite contains a sample project that can be expanded with machine-specific or project-specific screen forms by using WinCC.

Selection and ordering data

Description	Article No.	Product ID
Solutions for Powertrain TRANSLINE HMI Lite		
Runtime software		
Languages: Chinese Simplified, English, French, German, Italian, Spanish		
• Single license on DVD-ROM current software version	**6FC5263-0PY11-0AG0**	
• Single license on DVD-ROM software version 8.0 for TIA Portal V13	**6FC5263-8PY11-0AG0**	
• Single license on DVD-ROM software version 8.1 for TIA Portal V14	**6FC5263-8PY11-1AG0**	
• Single license on DVD-ROM software version 8.2 for TIA Portal V15	**6FC5263-8PY11-2AG0**	
• Single license on DVD-ROM software version 15.1 for TIA Portal V15.1	**6FC5263-1PY11-5AG1**	
• Single license on DVD-ROM software version 16.0 for TIA Portal V16.0	**6FC5263-1PY11-6AG0**	
• Single license on DVD-ROM software version 17.0 for TIA Portal V17.0	**6FC5263-1PY11-7AG0**	
• Copy single license without data storage medium	**6FC5263-0PY11-0AG1**	
SINUMERIK HMI PRO engineering system		
Create MyHMI /PRO		
• DVD-ROM without license for SINUMERIK 840D sl and SINUMERIK ONE current software version	**6FC5867-3YC00-0YA8**	MCS1220
• DVD-ROM without license For SINUMERIK 840D sl software version 8.3	**6FC5867-3YC80-0YA8**	(– *)
• DVD-ROM without license for SINUMERIK 840D sl and SINUMERIK ONE software version 9.4	**6FC5867-3YC84-0YA8**	MCS1220
Run MyHMI /PRO		
• For SINUMERIK 840D sl software option (in conjunction with SINUMERIK Operate software) single license without data storage medium	**6FC5800-0AP47-0YB0**	MCS1130
• For SINUMERIK 840D sl software option (in conjunction with SINUMERIK Operate operating software) Electronic license as PDF	**6FC5800-0AP47-0YH0**	MCS11300
• For SINUMERIK ONE software option (in conjunction with SINUMERIK Operate operating software) Electronic license as PDF	**6FC5800-0BP47-0YB0**	MCS11301

*) Marketing and sales via Siemens regional company.

© Siemens 2022

Overview

Operator components for CNCs

The Siemens range offers numerous solutions for CNC operator components. It encompasses easy-to-operate devices which can be individually combined for operator components, such as SINUMERIK operator panels, SIMATIC operator components, and supplementary components depending on the machine concept.

The following overview shows possible combinations of operator components for CNCs.

Operator components for CNCs	SINUMERIK NCU 710.3B PN	SINUMERIK NCU 720.3B PN	SINUMERIK NCU 730.3B PN	SINUMERIK TCU 30.3	SINUMERIK PCU (SIMATIC IPC427E)	SINUMERIK NCU 1750	SINUMERIK NCU 1760	SINUMERIK PPU 1740	SINUMERIK MCU 1720
Operator panel fronts blackline plus									
SIMATIC ITC	✓[1]	✓	✓	integrated	✓	✓	✓	✓	✓
SIMATIC IFP	–[2]	–[2]	–[2]	–	✓	✓	✓	✓	✓
SIMATIC IPC477E (Panel PC)	✓	✓	✓	–	–	✓	✓	✓	–
Operator panel fronts blackline									
SINUMERIK OP 015 black	✓	✓	✓	integrated	✓	–	–	–	–
Operator panel fronts in classic design									
SINUMERIK OP 08T	✓	✓	✓	integrated	✓	–	–	–	–
SINUMERIK OP 010	✓	✓	✓	✓	✓	–	–	–	–
SINUMERIK OP 010S	✓	✓	✓	✓	✓	–	–	–	–
SINUMERIK OP 010C	✓	✓	✓	✓	✓	–	–	–	–
SINUMERIK OP 012	✓	✓	✓	✓	✓	–	–	–	–
SINUMERIK OP 015A	✓	✓	✓	✓	✓	–	–	–	–

✓ = Combination possible
– = Combination not possible

Operator panels for SINUMERIK

Operator panels for SINUMERIK can be assembled individually using SINUMERIK and SIMATIC products. They are available with various performance levels and designs, and in miscellaneous display sizes. Operator panels for SINUMERIK are available in the following variants:

SINUMERIK PCU (SIMATIC IPC for SINUMERIK)

The SIMATIC IPC for SINUMERIK can be combined with the SIMATIC IFP/ITC and/or with the SINUMERIK operator panel fronts via the SINUMERIK TCU. It can be connected to a SINUMERIK NCU. In the distributed configuration, the SIMATIC IPC can be positioned at distances up to 100 m from the operator panel in the control cabinet.

SINUMERIK TCU

The SINUMERIK Thin Client Unit (TCU) allows operator panel fronts and the SINUMERIK PCU or NCU to be installed in separate locations. To that end, the user interface is copied to one or several operator panel fronts, each with a SINUMERIK TCU.

SINUMERIK operator panel fronts

All SINUMERIK operator panel fronts can be combined with the SINUMERIK PCU. The blackline operator panel fronts and the SINUMERIK OP 08T feature an integrated SINUMERIK TCU (Thin Client Unit).

The USB interfaces provide hot plug&play functionality for a standard PC keyboard, mouse or USB flash drive. SINUMERIK operator panel fronts are available with various display sizes, membrane keyboards, mechanical or capacitive buttons, as well as state-of-the-art operator panels with capacitive display areas for gesture control.

SIMATIC Industrial Thin Clients ITC for SINUMERIK

The SIMATIC ITC can be combined directly with a SIMATIC IPC. They can be connected to the SINUMERIK NCU via a SIMATIC IPC. SIMATIC ITCs are available in various display sizes, with multi-touch operation.

SIMATIC Industrial Flat Panel IFP for SINUMERIK

The SIMATIC IFPs can be combined directly with a SIMATIC IPC. They can be connected to the SINUMERIK NCU via a SIMATIC IPC. SIMATIC IFPs are available in various display sizes, with multi-touch operation. They can be positioned up to 30 m away from the SIMATIC IPC.

SIMATIC Panels with integrated IPC for SINUMERIK

The SIMATIC IPC477E is a compact unit comprising an operating unit (SIMATIC Industrial Flat Panel) with an integrated computing unit. It can be connected directly to a SINUMERIK NCU and supplemented with a SIMATIC IFP as required.

[1] Not applicable to ITC2200.
[2] Connection only via IPC to NCU.

© Siemens 2022

Overview

Operator panel fronts blackline plus

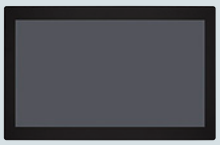

SIMATIC
ITC 1500/1900/2200

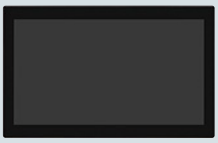

SIMATIC
IFP 1500/1900/2200/2400

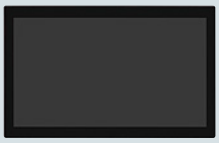

SIMATIC IPC477E

Operator panel fronts blackline

SINUMERIK OP 015 black

Operator panel fronts in classic design

SINUMERIK OP 08T

SINUMERIK OP 010

SINUMERIK OP 010S

SINUMERIK PCU (IPC)
Windows 10

SINUMERIK
TCU 30.3

SINUMERIK OP 010C

SINUMERIK OP 012

SINUMERIK OP 015A

Operator panel fronts blackline plus

The SINUMERIK and SIMATIC blackline plus series operator panels facilitate the monitoring and operation duties of the machine operator. With their touch screens, they open the way to a new machine operating philosophy. In conjunction with the state-of-the-art SINUMERIK Operate user interface, touch and gesture control are establishing themselves in production.

An operator panel is made up of an operator panel front and a SINUMERIK TCU or SIMATIC IPC.

- Modern operator panels that have an impressively low-profile and compact design
- Individual design of your user interface, using your expertise by means of openness in human-machine communication
- Distributed configuration through spatial separation of operator panel and SINUMERIK PCU or SIMATIC IPC

Operator panel fronts blackline

A SINUMERIK blackline operator panel comprises a SINUMERIK TCU as well as a SINUMERIK black operator panel front available in a variety of display sizes.

- Intelligent, rugged operator panels that have an impressively low-profile and compact design
- Individual design of your user interface, using your expertise by means of openness in human-machine communication
- Distributed design with physical separation of PCU and operator panel front or SIMATIC IPC

Operator panel fronts in classic design

A SINUMERIK operator panel in classic design comprises a SINUMERIK PCU and/or SINUMERIK TCU, as well as a SINUMERIK operator panel front in classic design which is available with various performance levels, and in miscellaneous display sizes.

- Intelligent, rugged operator panels that have an impressively low-profile and compact design
- Individual design of your user interface, using your expertise by means of openness in human-machine communication
- Distributed configuration through spatial separation of SINUMERIK PCU or SIMATIC IPC and operator panel fronts

© Siemens 2022

Overview

Supplementary operator components

The complementary, tried and tested operator control components such as handheld units, machine control panels, Push Button Panels, electronic handwheels, keyboards, and card readers can be used with the SINUMERIK TCU or the SINUMERIK PCU (SIMATIC IPC).

Machine control panel blackline plus

SINUMERIK MCP 398C

Machine control panels in classic design

SINUMERIK MCP 310C PN

SINUMERIK MCP 310 PN

SINUMERIK MPP 310 IEH

SINUMERIK MCP 483C PN

SINUMERIK MCP 483 PN

SINUMERIK MPP 483 IE

Keyboards in classic design

SINUMERIK KB 310C

SINUMERIK KB 483C

RAWE – full CNC keyboard

Handheld units

SINUMERIK HT 10

SINUMERIK HT 8

SINUMERIK HT 2

SINUMERIK
mini handheld unit

Electronic
handwheel

Machine control panels

SINUMERIK machine control panels are available in the blackline plus and classic designs. They can be used either with SINUMERIK PCU (SIMATIC IPC for SINUMERIK) or TCU.

SINUMERIK machine control panels can be adapted and expanded individually with the SINUMERIK expansion panel, SIRIUS ACT 3SU1, and laser labeling for machine-specific applications.

- Ergonomic machine control thanks to sophisticated design
- Machine-specific adaptations by means of variable labeling and control devices that can additionally be integrated

Handheld units

The SINUMERIK handheld units are available with a variety of performance options. Ergonomic handheld units are available which can be used as mobile machine control panels or as an additional main operator panel.

- Ergonomic machine control thanks to carefully designed housing
- Setup and operation of simple machines with the mini handheld unit, especially in the JobShop field, or similar applications
- Setup, operation, teaching and programming of user programs with the multifunctional handheld terminals

Keyboards in classic design

The keyboards allow convenient and user-friendly input of programs and texts.

- Ergonomic keyboard
- CNC-specific supplements

Storage devices

Storage devices are used for archiving user data.

Housing systems

Housing systems can be manufactured to precise dimensions and ready to install for numerous combinations of SINUMERIK operating components.

Optimized mounting of SINUMERIK CNCs with:

- Operator panel
- Full CNC keyboard
- Machine control panel
- Machine Push Button Panel

© Siemens 2022

Overview

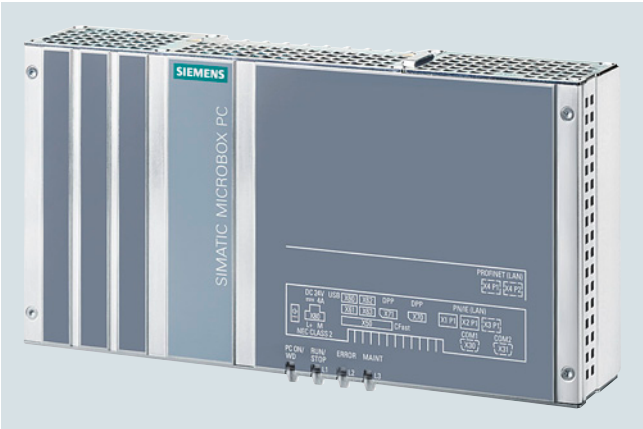

The SIMATIC IPC427E Microbox PC is a high-performance, compact PC platform working directly alongside the machines and processes in the industrial environment. All interfaces for communication are integrated via Ethernet.

The SIMATIC IPC427E Microbox PC is available with Windows 10 operating systems.

The licenses for the SINUMERIK Operate operating software and the PCU base software must be ordered separately.

Benefits

- High productivity for data acquisition and data processing thanks to high-performance Intel Dual Core/Intel Quad Core processor technology
- Maximum compactness for space-saving installation in all installation and mounting positions
- Outstanding industrial functionality due to the utilization of solid-state drive for mass storage
- High system availability reduces failures due to robustness (highly resistant against vibrations and shocks), low maintenance costs
- Maximum investment security due to extended period of service and support

Design

- Intel Dual Core/Intel Quad Core processor technology:
  - SIMATIC IPC427E with Windows 10 Enterprise LTSB 2016/LTSC 2019, 64 bit
    Standard performance: Intel Celeron G3902E 2 MB cache/1.60 GHz/4 GB DDR4 SDRAM
    High Performance: Intel Core i5-644EQ 6 MB cache/up to 2.70 GHz/8 GB DDR4 SDRAM

SIMATIC IPC427E with Windows 10, each with internal 240 GB solid-state drive.

Now also available with pre-installed PCU base software.

Interfaces (accessible from one side):

- 3 × Industrial Ethernet 10/100/1000 Mbps (RJ45 socket)
- 4 × USB 3.0
- 2 × DisplayPort

Function

- Integrated, parameterizable monitoring functions
- Enhanced reporting (diagnostics/messages) via Ethernet, email, sms text messages

Integration

SIMATIC IPC427E Windows 10 can be used for:

- SINUMERIK 840D sl:
  - With CNC SINUMERIK NCU 710.3B PN/NCU 720.3B PN/NCU 730.3B PN
- SIMATIC Flat Panels IFP1500/IFP1900/IFP2200/IFP2400
- SINUMERIK operator panel fronts OP with TCU 30.3 (connection via Ethernet), optionally with the handheld HT 8

Technical specifications

Article number	6AG4141-.....-....
Product brand name	SIMATIC
Product family	IPC
Product category	Microbox PC
Product type designation	IPC427E
Supply voltage	
• Type of supply voltage	24 V DC
Operating systems	
• pre-installed operating system	Windows 10
• Windows 10 Enterprise	Windows 10 Enterprise IoT LTSB 2016 Windows 10 Enterprise IoT LTSC 2019
Software	
• SIMATIC Software	Optionally with pre-installed SIMATIC WinCC RT Advanced / Software Controller CPU 1500S software bundle
Processor	
• Processor type	Celeron G3902 (2C/2T, 1.6 GHz, 2 MB Cache); Core i3-6102E (2C/4T, 1.9 GHz, 3 MB Cache); Core i5-6442EQ (4C/4T, 1.9 (2.7) GHz, 6 MB Cache, iAMT); Xeon E3-1505L v5 (4C/8T, 2.0 (2.8) GHz, 8 MB Cache, iAMT)
Memory	
• Type of memory	DDR4-2400 SO-DIMM
• Main memory	4 / 8 / 16 GB, ECC optional
• Capacity of main memory, max.	16 Gbyte
Data areas and their retentivity	
• Retentive data area (incl. timers, counters, flags), max.	512 kbyte, 128 KB can be stored in the buffer time; optional

© Siemens 2022

Technical specifications

Article number	6AG4141-.....-....
Product brand name	SIMATIC
Product family	IPC
Product category	Microbox PC
Product type designation	IPC427E
Interfaces	
• Number of industrial Ethernet interfaces	3, Ethernet (2 × RJ45, optional 3 × RJ45)
• USB port	4 × USB 3.0
• Connection for keyboard/mouse	USB / USB
• serial interface	Without / 2 × COM (RS 232 / 485 / 422; switchable)
Video interfaces	
• Graphics interface	2 × DisplayPort
Degree and class of protection	
• IP degree of protection	IP20
Ambient conditions	
• Relative humidity	Tested according to IEC 60068-2-78, IEC 60068-2-30: Operation: 5% to 80% at 25 °C (no condensation), Storage: 5% to 95% at 25 °C (no condensation)
Dimensions	
• Width	262 mm (10.31496 in)
• Height	139.7 mm (5.5 in)
• Depth	55.5 mm (2.18504 in)
Certificate of suitability	
• CE mark	Yes
• UL approval	Yes
• UL 508	Yes
• cULus	Yes
• RCM (formerly C-TICK)	Yes
• KC approval	Yes
• FCC	Yes
• EMC	CE, EN 55022A, EN 61000-6-4, EN 61000-6-2

Selection and ordering data

Description	Article No.
SIMATIC IPC427E Microbox PC HD graphic onboard 4 × USB V3.0 (high current) 3 × Gbit Ethernet (IE/PN) 240 GB SATA solid-state drive	
• Celeron G3902E Work memory: 4 GB Windows 10 IoT Enterprise 2016 LTSB (64 bit)	**6AG4141-1AA17-0FA0**
• Core i5-6442EQ Work memory: 8 GB Windows 10 IoT Enterprise 2016 LTSB (64 bit)	**6AG4141-5AB17-0FA0**
• Celeron G3902E, Windows 10, with installed PCU base software Requirements: SINUMERIK PCU base software /IPC (option P86)	**6AG4141-1DA17-0FX0**
• Core i5-6442EQ, Windows 10, with installed PCU base software Requirements: SINUMERIK PCU base software /IPC (option P86)	**6AG4141-5DB17-0FX0**
SINUMERIK 840D sl SINUMERIK PCU base software /IPC For SIMATIC IPC, software option, delivery of a license	**6FC5800-0AP86-0YB0**
Accessories	
USB 1.1/2.0 extension, type A For console installation Degree of protection IP66 *d* = 22 mm (0.87 in), length 1 m (3.28 ft)	**6FC5347-0AF01-1AA0**
Mounting kit for wall mounting For SIMATIC IPC427E	**6ES7648-1AA20-0YN0**
Mounting kit for vertical mounting For SIMATIC IPC427E	**6ES7648-1AA20-0YP0**
Mounting kit for DIN rails For SIMATIC IPC427E	**6ES7648-1AA21-0YM0**

© Siemens 2022

Overview

Thanks to its distributed structure, the SINUMERIK TCU 30.3 Thin Client Unit enables the operator panel fronts and the SINUMERIK PCU/SIMATIC IPC or SINUMERIK NCU to be installed separately. For this purpose, the user interface is copied to one or several operator panel fronts, each with a SINUMERIK TCU 30.3.

Benefits

- Efficient operation of larger machines using up to 5 identical operator panels simultaneously – of which 4 are thin clients
- Convenient operation of linked machines through suppression, also more than 4 thin client operator panels can be connected
- Design of flat operator panels through the shallow installation depth and low power dissipation.
- Vibration-free mounting of the SINUMERIK PCU (SIMATIC IPC for SINUMERIK) in the control cabinet

Design

The SINUMERIK TCU 30.3 is coupled via Industrial Ethernet as a thin client in a dedicated subnet via DHCP server to the SINUMERIK PCU (SIMATIC IPC) or SINUMERIK NCU.

Graphics:

- Resolution 1280 × 1042 pixels (SXGA)
- Color depth 32 bit

Interfaces:

- 4 × USB 2.0 type A at front, for connecting mouse, keyboard and USB flash drive
- 1 × Industrial Ethernet 10/100/1000 Mbps (RJ45 front socket)

Function

- Signal transmission between SINUMERIK PCU (SIMATIC IPC), SINUMERIK NCU and operator panel front via Industrial Ethernet
- Easy installation and service-friendly layout thanks to the component structure
- Functionality of the SINUMERIK PCU (SIMATIC IPC) is the same as in a centralized configuration, e.g. number of PCI slots. The same operating screen is shown synchronously on all operator panel fronts and can be operated from all panel fronts. Operator inputs on a thin client have equal priority with operator inputs on an operator panel directly connected to the SINUMERIK PCU. The operator panel in passive mode shows a darkened screen.
- Operation is possible on the active operator panel. An enabling function permits a passive operator panel to request operation.
- The combined operation of operator panel fronts on a SINUMERIK TCU or with an integral TCU and an operator panel front directly connected to the SINUMERIK PCU is possible.
- The distance to the operator panel fronts is determined by the maximum distance between two network nodes/access points (100 m/328 ft).

Integration

The SINUMERIK TCU 30.3 can be used for:

- SINUMERIK OP 010/OP 010S/OP 010C/OP 012/OP 015A operator panel fronts
- SINUMERIK 840D sl:
  NCU 710.3B PN/NCU 720.3B PN/NCU 730.3B PN
- SINUMERIK PCU (SIMATIC IPC for SINUMERIK)

© Siemens 2022

Configuration

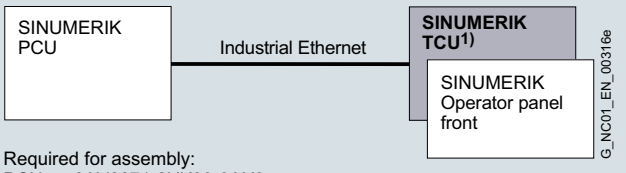

Required for assembly:
PCU: 6AV6671-8XK00-0AX3
TCU: 6FC5248-0AF20-2AA0 (not requ. for OP 010S)

1) Not requ. for operator panel fronts with integral TCU.

Connection overview for SINUMERIK TCU without central OP on PCU

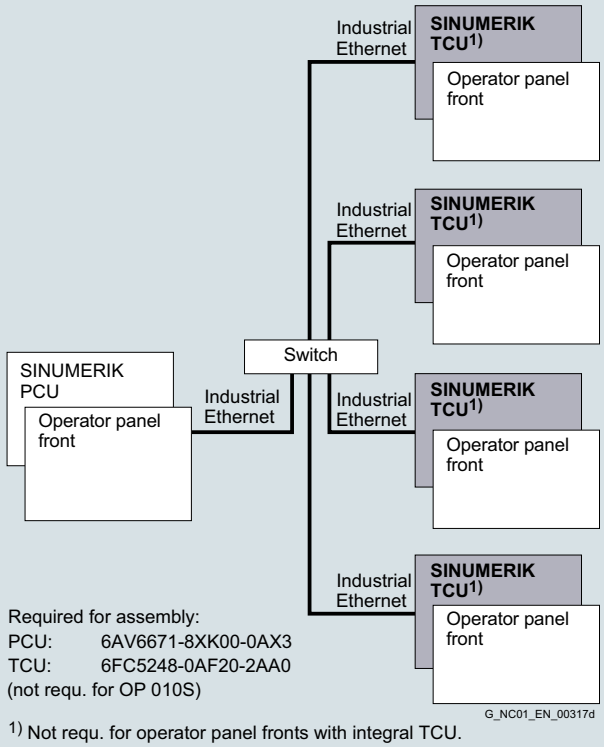

Required for assembly:
PCU: 6AV6671-8XK00-0AX3
TCU: 6FC5248-0AF20-2AA0
(not requ. for OP 010S)

1) Not requ. for operator panel fronts with integral TCU.

Connection overview for SINUMERIK TCU with central OP on PCU

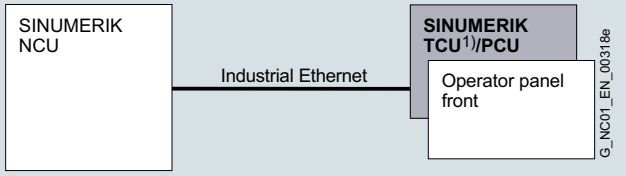

1) Not requ. for operator panel fronts with integral TCU.

Required for assembly:
PCU: 6AV6671-8XK00-0AX3
(not requ. for OP 010S)

Connection overview for SINUMERIK TCU on NCU

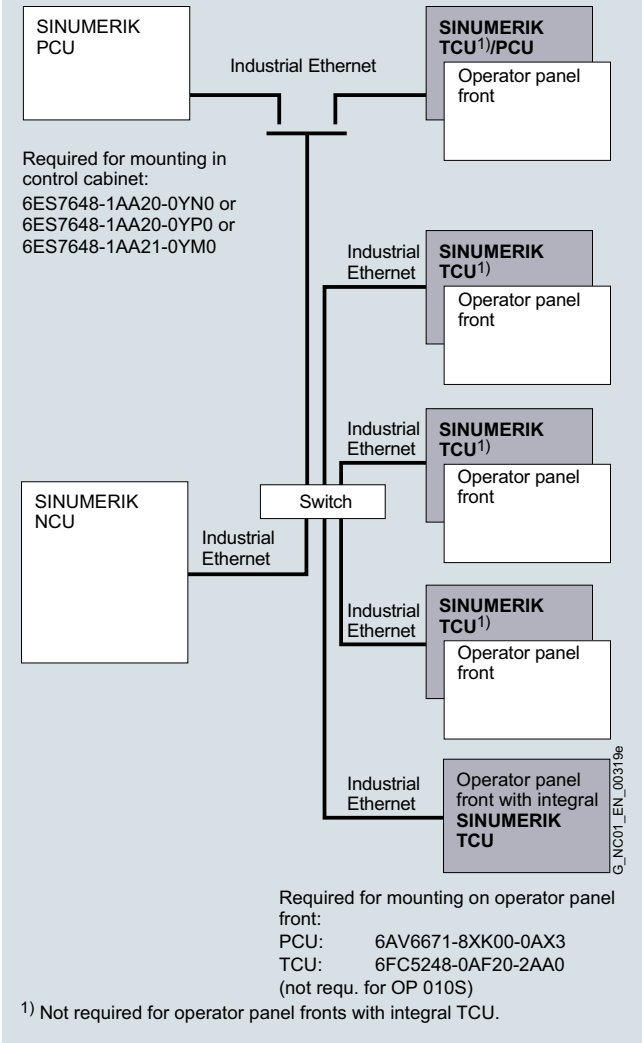

Required for mounting on operator panel front:
PCU: 6AV6671-8XK00-0AX3
TCU: 6FC5248-0AF20-2AA0
(not requ. for OP 010S)

1) Not required for operator panel fronts with integral TCU.

Connection overview for SINUMERIK TCU with several TCUs on NCU

© Siemens 2022

Technical specifications

Article number	6FC5312-0DA00-1AA1
Product brand name	SINUMERIK
Product short term	TCU 30.3
Product designation	Thin Client Unit
Supply voltage at DC	24 V
Active power consumption maximum	60 W
Degree of protection	IP20 / UL open type
• Note	Mounted
Environmental category acc. to IEC 60721-3-3	Condensation and icing excluded. Low air temperature 0 °C (32 °F).
Relative humidity at 25 °C (77 °F), during	
• storage	5 ... 95 %
• transport	5 ... 95 %
• operation	5 ... 95 %
Ambient temperature, during	
• storage	-25 °C ... 55 °C
• transport	-40 °C ... 70 °C
• operation	0 °C ... 55 °C
Width	260 mm (10.23622 in)
Height	265 mm (10.43307 in)
Depth	34 mm (1.33858 in)
• Note	Without brackets
Net weight	1.6 kg (3.5274 lb)
Certificate of suitability	CE, cULus

Selection and ordering data

Description	Article No.
SINUMERIK TCU 30.3 Thin Client Unit	**6FC5312-0DA00-1AA1**
Accessories	
Mounting bracket (2 units) For SINUMERIK PCU/TCU for mounting behind the operator panel front	**6FC5248-0AF20-2AA0**
USB 1.1/2.0 extension, type A For installation in 22 mm (0.87 in) hole Degree of protection IP66 Length 1 m (3.28 ft)	**6FC5347-0AF01-1AA0**
Signal cable for direct keys For SINUMERIK TCU 30.3 Thin Client Units	**6FC5347-0AF10-0AA0**
SIMATIC USB flash drive 32 GB Connection USB 3.0 type A SIMATIC IPC BIOS Manager V3.3 Windows CE preinstalled	**6AV6881-0AS42-0AA1**

More information

Information on the SIMATIC NET components, such as the Industrial Ethernet SCALANCE Electrical Lean Switches and the Industrial Ethernet FC TP Standard/Trailing Cable, can be found in the IK PI Catalog or Siemens Industry Mall.

www.siemens.com/industrymall

© Siemens 2022

Overview

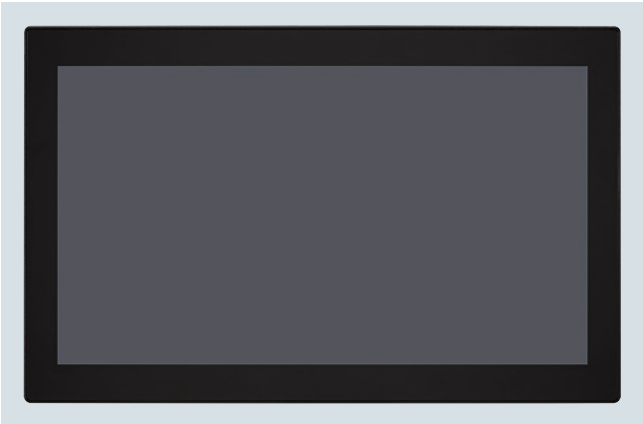

The SIMATIC ITC Industrial Thin Clients for SINUMERIK support the distributed configuration of the operator panel front and control. Communication in the SINUMERIK system takes place via VNC (Virtual Network Computing) for the remote control of an NCU/IPC.

The operating units are available in display sizes 15", 19" and 22" as capacitive multi-touch devices with glass front.

- SIMATIC ITC1500 – 15" multi-touch, HD-ready (1366 × 768)
- SIMATIC ITC1900 – 19" multi-touch, HD-ready (1366 × 768)
- SIMATIC ITC2200 – 22" multi-touch, full HD (1920 × 1080)

The operator panel front is secured from the rear using special mounting clips included in the scope of supply.

Benefits

- Capacitive sensor technology for user-friendly operation
- High-quality design and high degree of ruggedness
- Design of flat operator panels through shallow installation depth and low power dissipation
- Vibration-free mounting of the SIMATIC IPC for SINUMERIK in the control cabinet
- Efficient operation of larger machines using up to 4 additional distributed operator panels simultaneously

Design

The SIMATIC ITC Industrial Thin Clients for SINUMERIK are linked to the IPC/NCU via Industrial Ethernet as a thin client in a dedicated subnet (via DHCP server on the IPC/NCU).

Interfaces:

- 4 × USB 2.0 (rear)
- 2 × Ethernet 10/100/1000 Mbps

For a USB 2.0 interface at the front, a USB extension is available for installation in consoles.

Function

- Signal transmission between operator panel front and IPC/NCU via Industrial Ethernet
- Easy installation assisted by a self-holding mechanism
- The distance to the operator panel fronts is determined by the maximum distance between two network nodes/access points (100 m).

Integration

The SIMATIC ITC Industrial Thin Clients for SINUMERIK can be used for:

- SINUMERIK 840D sl from software version 4.8 SP4:
  - NCU 710.3B PN (for ITC2200 only in conjunction with IPC)
  - NCU 720.3B PN/NCU 730.3 PN
- SIMATIC IPC427E for SINUMERIK
  (PCU basic software V12.1 or higher)

© Siemens 2022

Technical specifications

Article number		6AV6646-1BA15-0NA0	6AV6646-1BA18-0NA0	6AV6646-1BA22-1NA0
Product brand name		SIMATIC	SIMATIC	SIMATIC
Product family		HMI	HMI	HMI
Product category		Industrial Thin Client	Industrial Thin Client	Industrial Thin Client
Product type designation		ITC1500 V3	ITC1900 V3	ITC2200 V3
Screen diagonal	in	15.6	18.5	21.5
Design of display		TFT widescreen display, LED backlighting	TFT widescreen display, LED backlighting	TFT widescreen display, LED backlighting
Monitor keyboard		Yes	Yes	Yes
Screen resolution of the display				
• Horizontal image resolution	Pixel	1366	1366	1920
• Vertical image resolution	Pixel	768	768	1080
Supply voltage				
• Type of supply voltage		24 V DC	24 V DC	24 V DC
• permissible range, lower limit (DC)	V	19.2	19.2	19.2
• permissible range, upper limit (DC)	V	28.8	28.8	28.8
• Rated value (DC)	V	24	24	24
Power				
• Active power consumption typical	W	34	34	41
Degree of protection				
• IP (at the front)		IP65	IP65	IP65
Ambient conditions				
• Ambient temperature during operation				
- min.	°C (°F)	0 (32)	0 (32)	0 (32)
- max.	°C (°F)	50 (122)	45 (113)	45 (113)
• Ambient temperature during storage/transportation				
- max.	°C (°F)	60 (140)	60 (140)	60 (140)
- min.	°C (°F)	-20 (-4)	-20 (-4)	-20 (-4)
• Relative humidity				
- Operation, max.	%	90; no condensation	90; no condensation	90; no condensation
Dimensions				
• Width of the housing front	mm (in)	398 (15.66929)	464 (18.26772)	529 (20.82677)
• Height of housing front	mm (in)	257 (10.11811)	294 (11.5748)	331 (13.0315)
• Mounting cutout, width	mm (in)	382 (15.03937)	448 (17.6378)	513 (20.19685)
• Mounting cutout, height	mm (in)	241 (9.48819)	278 (10.94488)	315 (12.40158)
• Overall depth	mm (in)	73 (2.87402)	73 (2.87402)	73 (2.87402)
Weights				
• Weight without packaging	kg (lb)	5 (11.02311)	6.1 (13.4482)	7.2 (15.87328)

Selection and ordering data

Description	Article No.
SIMATIC ITC1500 Industrial Thin Client Panel 15" display, Industrial Ethernet interface, HD-ready, multi-touch	**6AV6646-1BA15-0NA0**
SIMATIC ITC1900 Industrial Thin Client Panel 19" display, Industrial Ethernet interface, HD-ready, multi-touch	**6AV6646-1BA18-0NA0**
SIMATIC ITC2200 Industrial Thin Client Panel 22" display, Industrial Ethernet interface, full HD, multi-touch	**6AV6646-1BA22-1NA0**

Description	Article No.
Accessories	
Mounting clips (steel) For SIMATIC Industrial Thin Clients with 15", 19" and 22" displays Sheet thickness 2 ... 6 mm (0.08 ... 0.24 in)	**6AV6671-8XK00-0AX3**
USB 1.1/2.0 extension, type A For console installation *d* = 22 mm (0.87 in), length 1 m (3.28 ft)	**6FC5347-0AF01-1AA0**

© Siemens 2022

Overview

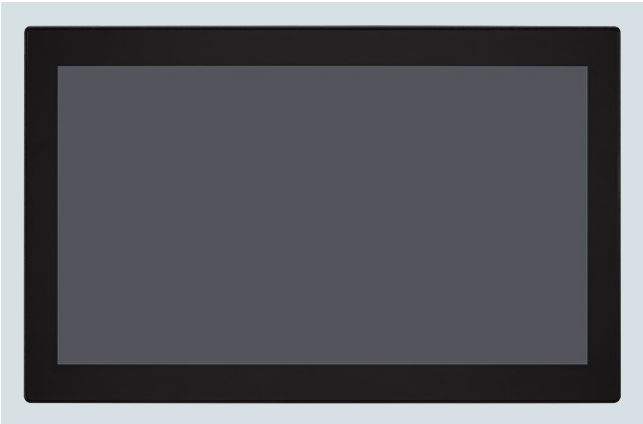

Industrial Flat Panels are LCD monitors in robust industrial design with widescreen format and featuring multitouch operation.

They are ideal for installation in machines, control cabinets, consoles and platforms, or in racks.

The Flat Panels are secured on the rear with special mounting clips included in the scope of supply.

The extended versions can be moved to a distance of up to 100 m from the IPC using a transceiver unit.

Benefits

- Low space requirement and low weight
- Long service life due to rugged industrial design
- Lower energy requirement
- Working free from fatigue
- Well structured operator control and monitoring thanks to various display sizes

Design

- Robust aluminum front, multi-touch display with anti-glare and hardened mineral glass screen
- TFT display in sizes 15", 19", 22" and 24", each featuring 1920 × 1080 pixels, 16 million colors

Interfaces:

- 1 × Ext-Link for transceiver unit (HDBaseT)
- 2 × USB 2.0 type A (rear)
- 1 × DVI-D
- 1 × DisplayPort V1.2

Integration

SIMATIC Flat Panels in conjunction with SINUMERIK PCU can be used for:

- SINUMERIK 840D sl:
  - via IPC to NCU 710.3B PN/NCU 720.3B PN/NCU 730.3B PN

Selection and ordering data

Description	Article No.
SIMATIC IFP1500 V2 extended neutral Industrial Flat Panel 15" display (16:9) Full HD, multi-touch • Extended version up to 100 m (328 ft)	**6AV7863-5MA10-2NA0**
SIMATIC IFP1900 V2 extended neutral Industrial Flat Panel 19" display (16:9) Full HD, multi-touch • Extended version up to 100 m (328 ft), not including transmission module and cable set	**6AV7863-6MA10-2NA0**
SIMATIC IFP2200 V2 extended neutral Industrial Flat Panel 22" display (16:9) Full HD, multi-touch • Extended version up to 100 m (328 ft), not including transmission module and cable set	**6AV7863-4MA10-2NA0**
SIMATIC IFP2400 V2 extended neutral Industrial Flat Panel 24" display (16:9) Full HD, multi-touch • Extended version up to 100 m (328 ft), not including transmission module and cable set	**6AV7863-7MA10-2NA0**
Accessories	
Mounting clips (steel) For SIMATIC Industrial Flat Panels with 15", 19", 22" and 24" displays Sheet thickness 2 … 6 mm (0.08 ... 0.24 in)	**6AV6671-8XK00-0AX3**
USB 1.1/2.0 extension, type A For console installation Degree of protection IP66 *d* = 22 mm (0.87 in), length 1 m (3.28 ft)	**6FC5347-0AF01-1AA0**
Cable set For SIMATIC IFP.... V2 extended neutral (CAT6 cable, host module V2 (HDBaseT) • Length 10 m (32 ft) • Length 15 m (49 ft) • Length 20 m (65 ft) • Length 30 m (98 ft)	 **6AV7860-1EX21-0AB1** **6AV7860-1EX21-5AB1** **6AV7860-1EX22-0AB1** **6AV7860-1EX23-0AB1**
Non-assembled cable, without connector • By the meter and non-assembled, without connector	**6XV1878-2C**
CAT6 connector 2 units	**6AV7860-1EY00-0AA0**
Transmission module • HDBaseT transceiver unit, individual	**6AV7860-3EH00-0AA0**

© Siemens 2022

Technical specifications

Article number		6AV7863-5MA10-2NA0	6AV7863-6MA10-2NA0	6AV7863-4MA10-2NA0	6AV7863-7MA10-2NA0
Product brand name		SIMATIC	SIMATIC	SIMATIC	SIMATIC
Product family		IPC	IPC	IPC	IPC
Product type designation		IFP1500 V2 PRO	IFP1900 V2	IFP2200	IFP2400
Short designation		Flat Panel 15" multi-touch ext.	SIMATIC IFP1900 V2	SIMATIC IFP2200 V2	SIMATIC IFP2400 V2
Screen diagonal	in	15.6	18.5	21.5	23.8
Design of display		TFT widescreen display, LED backlighting	TFT widescreen display, LED backlighting	TFT widescreen display, LED backlighting	TFT widescreen display, LED backlighting
Monitor keyboard		Yes	Yes	Yes	Yes
On Screen Display (OSD) configuration		-, Adjustable by means of software	-, Adjustable by means of software	-	-, Adjustable by means of software
Screen resolution of the display	pixel	1 920 × 1 080	1 920 × 1 080	1 920 × 1 080	1 920 × 1 080
Supply voltage					
• Type of supply voltage		DC	DC	DC	DC
• Rated value (DC)	V	24	24	24	24
Power loss					
• Power loss, max.	W	30	35	30	41
• Power loss, typ.	W	24	29	24	36
Ambient conditions					
• Relative humidity × Operation, max.	%	90	90	90	90
• Ambient temperature during storage/transportation		-	-	-	-
- min.	°C (°F)	-20 (-4)	-20 (-4)	-20 (-4)	-20 (-4)
- max.	°C (°F)	60 (140)	60 (140)	60 (140)	60 (140)
Dimensions					
• Width of the housing front	mm (in)	398 (15.66929)	464 (18.26772)	529 (20.82677)	585 (23.0315)
• Height of housing front	mm (in)	257 (10.11811)	294 (11.5748)	331 (13.0315)	363 (14.29134)
• Mounting cutout, width	mm (in)	382 (15.03937)	448 (17.6378)	513 (20.19685)	569 (22.40158)
• Mounting cutout, height	mm (in)	241 (9.48819)	278 (10.94488)	315 (12.40158)	347 (13.66142)
• Overall depth	mm (in)	63.4 (2.49606)	63.4 (2.49606)	63.4 (2.49606)	63.4 (2.49606)
Weights					
• Weight (without packaging)	kg (lb)	4 (8.81849)	5 (11.02311)	6.4 (14.10958)	7.9 (17.41652)
Certificate of suitability					
• CE mark		Yes	Yes	Yes	Yes
• cULus		Yes	Yes	Yes	Yes
• RCM (formerly C-TICK)		Yes	Yes	Yes	Yes
• KC approval		-	-	-	-

© Siemens 2022

Overview

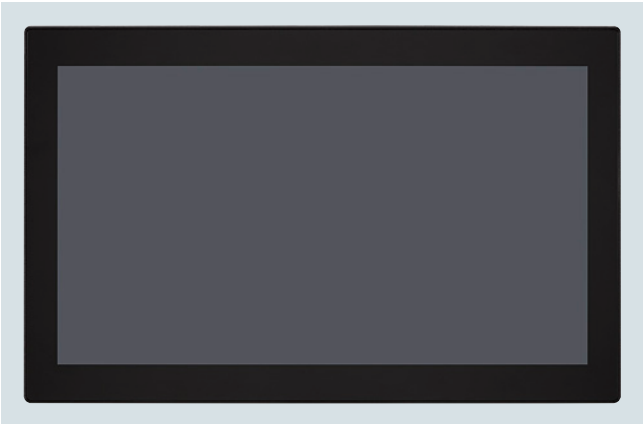

The SIMATIC IPC477E is a high-performance compact unit comprising an operating unit (SIMATIC Flat Panel) with an integrated computing unit. SIMATIC IPC477E is rugged and reliable, provides the openness of a PC, and is designed for use on the machine. The operating unit is available as a 15", 19", 22" or 24" multi-touch display.

The licenses for the operating software SINUMERIK Operate and the PCU base software must be ordered separately.

Benefits

- Superior suitability for industrial applications due to robust and compact construction, withstanding intense vibration and shock loads
- Maximum investment security for long-term machine concepts due to guaranteed availability of spare parts for all components
- High system availability minimizes downtimes through efficient self-diagnostics and no maintenance requirements for components such as fans and hard disks
- Outstanding industrial functionality due to integrated PROFINET interface

Design

The SIMATIC IPC477E is connected to the SINUMERIK NCU via Ethernet.

Panel PC variants for SINUMERIK

- SIMATIC IPC477E with Windows 10 Enterprise LTSB 2016, 64 bit
  - 15" multi-touch device (capacitive glass touch), HD ready
    Intel Celeron G3902E 2 MB cache/1.60 GHz/4 GB
    Internal solid-state drive 240 GB
  - 19" multi-touch device (capacitive glass touch), HD ready
    Intel Core i3-6102E 3 MB cache/1.90 GHz/8 GB
    Internal solid-state drive 240 GB
  - 22" multi-touch device (capacitive glass touch), full HD
    Intel Core i3-6102E 3 MB cache/1.90 GHz/4 GB
    Internal 240 GB solid-state drive
  - 24" multi-touch device (capacitive glass touch), full HD
    Intel Core i5-6442EQ 6 MB cache/up to 2.70 GHz/8 GB
    Internal 240 GB solid-state drive

Interfaces:

- 3 × Ethernet 10/100/1000 Mbps (RJ45 socket)
- 4 × USB 3.0
- 1 × DisplayPort
- 1 slot for external CFast card

Integration

SIMATIC IPCs can be used for:

- SINUMERIK 840D sl:
  NCU 710.3B PN/NCU 720.3B PN/NCU 730.3B PN
- SIMATIC Panels for SINUMERIK Windows 10

© Siemens 2022

Technical specifications

Article number	6AV7241-.....-....
Product brand name	SIMATIC
Product family	IPC
Product category	Panel PC
Supply voltage	
• Type of supply voltage	100/240 V AC (autorange) 50/60 Hz; optional 24 V DC
Operating systems	
• pre-installed operating system	Windows 10
• Windows 10 Enterprise	Yes; Windows 10 Enterprise 2016 LTSB, 64 bit, MUI
Processor	
• Processor type	Celeron G3902 (2C/2T, 1.6 GHz, 2 MB Cache); Core i3-6102E (2C/4T, 1.9 GHz, 3 MB Cache); Core i5-6442EQ (4C/4T, 1.9 (2.7) GHz, 6 MB Cache, iAMT); Xeon E3-1505L v5 (4C/8T, 2.0 (2.8) GHz, 8 MB Cache, iAMT)
Drives	
• Hard disk	2.5" SATA ≥ 320 GB
• SSD	SSD, 128 / 240 / 480 GB
Memory	
• Type of memory	DDR4-2400 SO-DIMM
• Capacity of main memory, max.	16 Gbyte
Data areas and their retentivity	
• Retentive data area (incl. timers, counters, flags), max.	512 kbyte, 128 KB can be stored in the buffer time; optional

Article number	6AV7241-.....-....
Product brand name	SIMATIC
Product family	IPC
Product category	Panel PC
Interfaces	
• Number of industrial Ethernet interfaces	3, 3 × Ethernet (RJ45)
• USB port	4 × USB 3.0
• Connection for keyboard/mouse	USB / USB
• serial interface	Without / 2 × COM (RS 232 / 422 / 485), selectable in the BIOS
Degree and class of protection	
• IP (at the front)	IP65
• IP (rear)	IP20
Certificate of suitability	
• CE mark	CE mark
• CSA approval	Yes
• UL approval	Yes
- UL 508	Yes
• cULus	Yes
• RCM (formerly C-TICK)	Yes
• KC approval	Yes
• FCC	Yes
• EMC	CE, EN 61000-6-4; CISPR 22:2004 Class A; FCC Class A
Ambient conditions	
• Relative humidity	Tested according to IEC 60068-2-78, IEC 60068-2-30: 5% to 80% at 25 °C (no condensation)

© Siemens 2022

Technical specifications

Article number		6AV7241-.B...-....	6AV7241-.D...-....	6AV7241-.E...-....	6AV7241-.J...-....
Design of display		15" TFT touch	19" TFT touch	22" TFT touch	15" TFT multi-touch
Screen diagonal	in	15.6	18.5	21.5	15.6
• Horizontal image resolution	pixel	1 280	1 366	1 920	1 366
• Vertical image resolution	pixel	800	768	1 080	768
MTBF backlighting (at 25 °C)	h	50 000	50 000	30 000	50 000
Design as touch screen		Design as touch screen, analog, resistive	Design as touch screen, analog, resistive	Design as touch screen, analog, resistive	
Design as multi-touch screen					Design as multi-touch screen, Projective-capacitive
• central design		Yes	Yes	Yes	Yes
• distributed design		No	No	No	No

Article number		6AV7241-.K...-....	6AV7241-.L...-....	6AV7241-.R...-....	6AV7241-.S...-....
Design of display		19" TFT multi-touch	22" TFT multi-touch	24" TFT multi-touch	24" TFT multi-touch
Screen diagonal	in	18.5	21.5	23.8	23.8
• Horizontal image resolution	pixel	1 366	1 920	1 920	1 920
• Vertical image resolution	pixel	768	1 080	1 080	1 080
MTBF backlighting (at 25 °C)	h	50 000	30 000	30 000	30 000
Design as multi-touch screen		Design as multi-touch screen, Projective-capacitive	Design as multi-touch screen, Projective-capacitive	Design as multi-touch screen, Projective-capacitive	Design as multi-touch screen, Projective-capacitive
• central design		Yes	Yes	Yes	Yes
• distributed design		No	No	No	No

Selection and ordering data

Description	Article No.
SIMATIC IPC477E With neutral front; 4 USBs (rear), Ethernet (10/100/1000), 3 × Gigabit Ethernet (IE/PN), internal mass storage: SATA 240 GB solid-state drive, without SIMATIC software	
• 15" multi-touch display (1366 × 768), Celeron G3902E, Memory configuration: 4 GB; Windows 10 IoT Enterprise 2016 LTSB (64-bit)	**6AV7241-1WA07-0FA0**
• 19" multi-touch display (1366 × 768), Core i3-6102E, Memory configuration: 8 GB, Windows 10 IoT Enterprise 2016 LTSB (64-bit)	**6AV7241-3XB07-0FA0**
• 22" multi-touch display (1920 × 1080), Core i3-6102E, memory configuration: 4 GB Windows 10 IoT Enterprise 2016 LTSB (64-bit)	**6AV7241-3YA07-0FA0**
• 24" multi-touch display (1920 × 1080), Core i5-6442EQ, memory configuration: 8 GB Windows 10 IoT Enterprise 2016 LTSB (64-bit)	**6AV7241-5SB07-0FA0**
SINUMERIK 840D sl SINUMERIK PCU base software /IPC For SIMATIC IPC software option, delivery of a license	**6FC5800-0AP86-0YB0**

Description	Article No.
Accessories	
Mounting clips (steel) For SIMATIC IPC with 15", 19", 22" and 24" displays Sheet thickness 2 … 6 mm (0.08 … 0.24 in)	**6AV6671-8XK00-0AX3**
USB 1.1/2.0 extension, type A For console installation Degree of protection IP66 *d* = 22 mm (0.87 in), length 1 m (3.28 ft)	**6FC5347-0AF01-1AA0**

© Siemens 2022

Overview

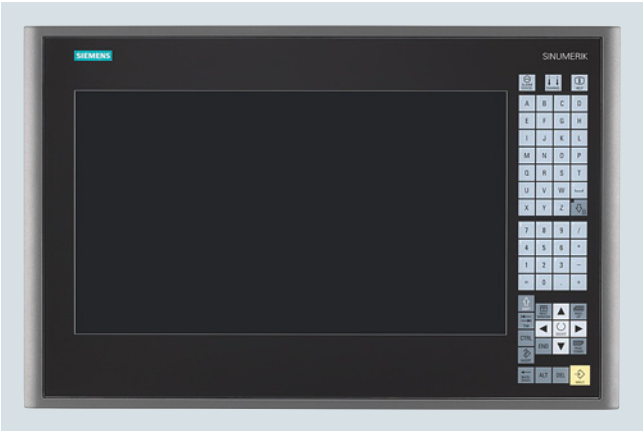

The SINUMERIK OP 015 black operator panel front with 15.6" LCD color display and 1366 × 768 pixels (widescreen format) enables the distributed installation of the operator panel front and the control. The SINUMERIK OP 015 black operator panel front has a capacitive keyboard with 64 keys and capacitive display area for gesture operation.

The operator panel front is secured from the rear using special clamps. Installation is assisted by a self-holding mechanism. The clamps are included in the scope of supply.

Benefits

- Convenient operation through capacitive sensor technology
- Efficient operation of larger machines using up to 4 additional, distributed operator panels simultaneously
- High-quality design and high degree of ruggedness
- Design of flat operator panels through shallow installation depth and low power loss.
- Vibration-free mounting of the SINUMERIK PCU (SIMATIC IPC for SINUMERIK) in the control cabinet

Design

The SINUMERIK OP 015 black operator panel front with integrated TCU is coupled via Industrial Ethernet as a thin client in a dedicated subnet via DHCP server to the PCU/NCU.

Interfaces:

- 3 × USB 2.0 type A (rear)
- 1 × Industrial Ethernet 10/100/1000 Mbps (RJ45 rear socket)

For a USB 2.0 interface at the front, a USB extension is available for installation in consoles.

Function

- Signal transmission between operator panel front and PCU/NCU via Industrial Ethernet
- Easy installation assisted by a self-holding mechanism
- The distance to the operator panel fronts is determined by the maximum distance between two network nodes/access points (100 m).

Integration

The SINUMERIK OP 015 black operator panel front can be used for:

- SINUMERIK 840D sl:
  NCU 710.3B PN/NCU 720.3B PN/NCU 730.3B PN
- SINUMERIK PCU (SIMATIC IPC for SINUMERIK)

© Siemens 2022

Technical specifications

Article number	6FC5303-0AF14-0AA0
Product brand name	SINUMERIK
Product short term	OP 015 black
Product designation	Operator panel front
Screen diagonal	15.6 in
Design of the display	LCD color
Screen resolution of the display	1366 × 768 Pixel
Supply voltage at DC	24 V
Active power consumption	
• typical	24 W
• maximum	42 W
Degree of protection	
• front	IP65/IP66
• rear	IP20
Environmental category acc. to IEC 60721-3-3	Condensation and icing excluded. Low air temperature 0 °C (32 °F).
Relative humidity at 25 °C (77 °F), during	
• storage	5 ... 95 %
• transport	5 ... 95 %
• operation	5 ... 95 %
Ambient temperature, during	
• storage	-20 ... +55 °C (-4 ... +131 °F)
• transport	-20 ... +55 °C (-4 ... +131 °F)
• operation	
- front	0 ... 45 °C (32 ... 113 °F)
- rear	0 ... 55 °C (32 ... 131 °F)
Width	483 mm (19.01575 in)
Height	310 mm (12.20472 in)
Depth	48 mm (1.88976 in)
Installation depth	37 mm (1.45669 in)
• Note	Clearance + 10 mm (0.39 in)
Mounting surface	
• section width	450 mm (17.71654 in)
• section height	290 mm (11.41732 in)
Net weight	7 kg (15.43236 lb)
Certificate of suitability	CE, cULus

Selection and ordering data

Description	Article No.
SINUMERIK OP 015 black operator panel front 39.6 cm/15.6" LCD color display Widescreen format (1366 × 768 pixels) Capacitive keys and capacitive display area Integrated TCU	**6FC5303-0AF14-0AA0**
Accessories	
USB 1.1/2.0 extension, type A For installation in 22 mm (0.87 in) hole Degree of protection IP66 Length 1 m (3.28 ft)	**6FC5347-0AF01-1AA0**
SIMATIC USB flash drive 32 GB Connection USB 3.0 type A SIMATIC IPC BIOS Manager V3.3 Windows CE preinstalled	**6AV6881-0AS42-0AA1**

© Siemens 2022

Overview

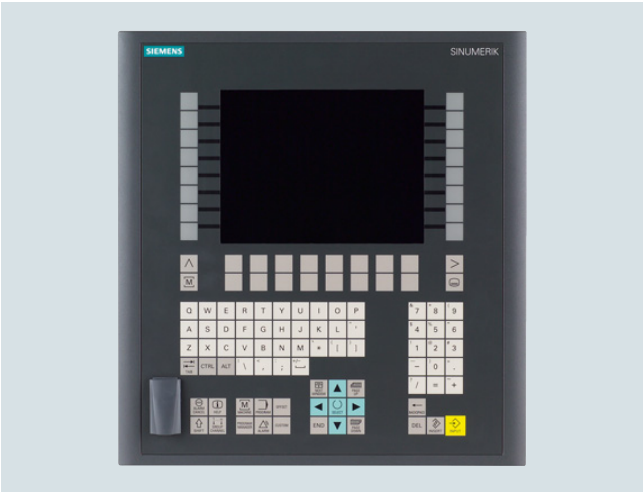

The extremely compact SINUMERIK OP 08T operator panel front with 7.5" TFT color display, 640 × 480 pixels (VGA) supports the distributed installation of the operator panel front and CNC. The SINUMERIK OP 08T operator panel front contains a membrane keyboard with 75 keys (layout as SINUMERIK KB 310C full CNC keyboard), as well as 2 × (8 + 2) horizontal and 2 × 8 vertical softkeys.

The operator panel front is secured from the rear using special clamps included in the scope of supply.

Benefits

- Efficient operation of larger machines using up to 4 additional, distributed operator panels simultaneously
- Design of compact operator panels through small size and installation depth and low power loss
- Vibration-free mounting of the SINUMERIK PCU (SIMATIC IPC for SINUMERIK) in the control cabinet

Design

The SINUMERIK OP 08T operator panel front with integrated TCU is coupled via Industrial Ethernet as a thin client in a dedicated subnet via DHCP server to the PCU/NCU.

Interfaces:

- 2 × USB 1.1 type A (1 × front/1 × rear)
- 1 × Industrial Ethernet 10/100 Mbps (RJ45 rear socket)

The 2 × 8 vertical softkeys can be used as direct keys with SINUMERIK 840D sl.

Function

- Signal transmission between operator panel front and PCU/NCU via Industrial Ethernet
- Simple installation
- Mixed operation with one operator panel front directly on the PCU is possible. Operator inputs on a SINUMERIK OP 08T have equal priority with operator inputs on an operator panel front connected directly to the PCU. The operator panel in passive mode shows a darkened screen.
- The distance to the operator panel fronts is determined by the maximum distance between two network nodes/access points (100 m).

Integration

The SINUMERIK OP 08T operator panel front can be used for:

- SINUMERIK 840D sl:
  NCU 710.3B PN/NCU 720.3B PN/NCU 730.3B PN
- SINUMERIK PCU (SIMATIC IPC for SINUMERIK)

© Siemens 2022

Technical specifications

Article number	6FC5203-0AF04-1BA1
Product brand name	SINUMERIK
Product short term	OP 08T
Product designation	Operator panel front
Screen diagonal	7.5 in
Design of the display	TFT color VGA
Screen resolution of the display	640 pixel × 480 pixel
Supply voltage at DC	24 V
Active power consumption	
• maximum	15 W
Degree of protection	
• front	IP65
• rear	IP00
Environmental category acc. to IEC 60721-3-3	Condensation and icing excluded. Low air temperature 0 °C (32 °F).
Relative humidity at 25 °C (77 °F), during	
• storage	5 ... 95 %
• transport	5 ... 95 %
• operation	5 ... 95 %
Ambient temperature, during	
• storage	-20 ... +55 °C (-4 ... +131 °F)
• transport	-20 ... +55 °C (-4 ... +131 °F)
• operation	
- front	0 ... 45 °C (32 ... 113 °F)
- rear	0 ... 55 °C (32 ... 131 °F)
Width	310 mm (12.20472 in)
Height	330 mm (12.99213 in)
Depth	51.7 mm (2.03543 in)
• Note	Without USB protective cover on the front
Installation depth	41.2 mm (1.62205 in)
• Note	Clearance + 10 mm (0.39 in)
Mounting surface	
• section width	285 mm (11.22047 in)
• section height	304 mm (11.9685 in)
Net weight	2.9 kg (6.39341 lb)
Certificate of suitability	CE / cULus

Selection and ordering data

Description	Article No.
SINUMERIK OP 08T operator panel front 19.1 cm/7.5" TFT color display (640 × 480 pixels) Membrane keys Integrated TCU	**6FC5203-0AF04-1BA1**
Accessories	
Slide-in labels for inscribing For SINUMERIK OP 08T operator panel front For vertical softkeys 3 sheets in A4 format	**6FC5248-0AF04-1BA0**
SIMATIC USB flash drive 32 GB Connection USB 3.0 type A SIMATIC IPC BIOS Manager V3.3 Windows CE preinstalled	**6AV6881-0AS42-0AA1**

© Siemens 2022

Overview

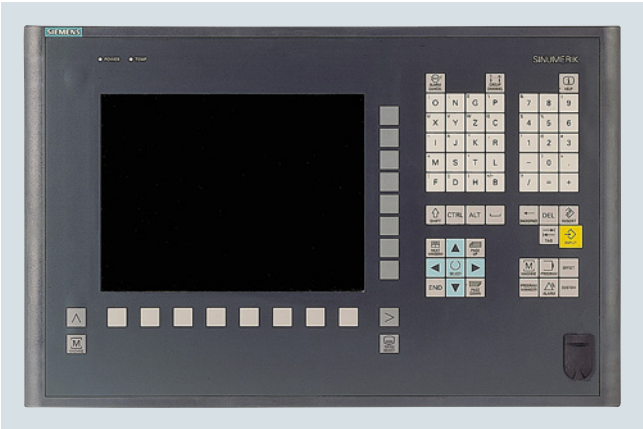

The SINUMERIK OP 010 operator panel front with 10.4" TFT color display with LED backlight and a resolution of 640 × 480 pixels (VGA) features a 62-key membrane keypad with 8 + 4 horizontal and 8 vertical softkeys that has been optimized for programming part programs.

The operator panel front is secured from the rear using special clamps included in the scope of supply.

Benefits

- Low-cost operator control and monitoring thanks to 10.4" TFT color display with optimized keyboard

Design

The SINUMERIK OP 010 operator panel front is connected to the SINUMERIK PCU (SIMATIC IPC for SINUMERIK) by flat ribbon cables.

Interfaces:

- 1 × USB 1.1 type A (front)
- 2 × flat ribbon cables for connecting the PCU

Integration

The SINUMERIK OP 010 operator panel front can be used for:

- SINUMERIK 840D sl:
  NCU 710.3B PN/NCU 720.3B PN/NCU 730.3B PN
- SINUMERIK PCU (SIMATIC IPC for SINUMERIK)
- SINUMERIK TCU 30.3

Technical specifications

Article number	6FC5203-0AF00-0AA3
Product brand name	SINUMERIK
Product short term	OP 010
Product designation	Operator panel front
Screen diagonal	10.4 in
Design of the display	TFT color VGA with LED backlight
Screen resolution of the display	640 pixel × 480 pixel
Supply voltage at DC	5 V
• Note	Via PCU or TCU
Active power consumption	
• typical	10 W
• maximum	16 W
Degree of protection	
• front	IP65
• rear	IP00
Environmental category acc. to IEC 60721-3-3	Condensation and icing excluded. Low air temperature 0 °C (32 °F).
Relative humidity at 25 °C (77 °F), during	
• storage	5 ... 95 %
• transport	5 ... 95 %
• operation	5 ... 95 %
Ambient temperature, during	
• storage	-20 ... +55 °C (-4 ... +131 °F)
• transport	-20 ... +55 °C (-4 ... +131 °F)
• operation	
- front	0 ... 55 °C (32 ... 131 °F)
- rear	0 ... 55 °C (32 ... 131 °F)
Width	483 mm (19.01575 in)
Height	310 mm (12.20472 in)
Depth	30 mm (1.1811 in)
• Note	Without USB protective cover on the front
Installation depth	20 mm (0.7874 in)
• Note	Clearance + 10 mm (0.39 in)
Mounting surface	
• section width	450 mm (17.71654 in)
• section height	290 mm (11.41732 in)
Net weight	5 kg (11.02311 lb)
Certificate of suitability	CE / cULus

Selection and ordering data

Description	Article No.
SINUMERIK OP 010 operator panel front 26.4 cm/10.4" TFT color display (640 × 480 pixels) with LED backlight membrane keys	**6FC5203-0AF00-0AA3**
Accessories	
Slide-in labels for inscribing For SINUMERIK OP 010 operator panel front 3 sheets in DIN A4 format	**6FC5248-0AF07-0AA0**

© Siemens 2022

Overview

The slimline SINUMERIK OP 010S operator panel front with 10.4" TFT color display with a resolution of 640 × 480 pixels (VGA) features 8 + 4 horizontal and 8 vertical mechanical keys.

The SINUMERIK KB 310C full CNC keyboard is suitable as the input keyboard.

The operator panel front is secured from the rear using special clamps included in the scope of supply.

Benefits

- Space-saving operator control and monitoring
- Ergonomic and reliable operation thanks to the optional SINUMERIK KB 310C full CNC keyboard

Design

The SINUMERIK OP 010S operator panel front is connected to the SINUMERIK PCU (SIMATIC IPC for SINUMERIK) by flat ribbon cables.

Interfaces:

- 1 × USB 1.1 type A (front)
- 2 × flat ribbon cables for connecting the PCU

Integration

The SINUMERIK OP 010S operator panel front can be used for:

- SINUMERIK 840D sl:
  NCU 710.3B PN/NCU 720.3B PN/NCU 730.3B PN
- SINUMERIK PCU (SIMATIC IPC for SINUMERIK)
- SINUMERIK TCU 30.3

Technical specifications

Article number	6FC5203-0AF04-0AA0
Product brand name	SINUMERIK
Product short term	OP 010S
Product designation	Operator panel front
Screen diagonal	10.4 in
Design of the display	TFT color VGA
Screen resolution of the display	640 pixel × 480 pixel
Supply voltage at DC	5 V
• Note	Via PCU or TCU
Active power consumption	
• typical	10 W
• maximum	16 W
Degree of protection	
• front	IP54
• rear	IP00
Environmental category acc. to IEC 60721-3-3	Condensation and icing excluded. Low air temperature 0 °C (32 °F).
Relative humidity at 25 °C (77 °F), during	
• storage	5 ... 95 %
• transport	5 ... 95 %
• operation	5 ... 95 %
Ambient temperature, during	
• storage	-20 ... +55 °C (-4 ... +131 °F)
• transport	-20 ... +55 °C (-4 ... +131 °F)
• operation	
- front	0 ... 45 °C (32 ... 113 °F)
- rear	0 ... 55 °C (32 ... 131 °F)
Width	310 mm (12.20472 in)
Height	330 mm (12.99213 in)
Depth	45 mm (1.77165 in)
• Note	Without USB protective cover on the front
Installation depth	35 mm (1.37795 in)
• Note	Clearance + 10 mm (0.39 in)
Mounting surface	
• section width	285 mm (11.22047 in)
• section height	304 mm (11.9685 in)
Net weight	5.5 kg (12.12542 lb)
Certificate of suitability	CE / cULus

Selection and ordering data

Description	Article No.
SINUMERIK OP 010S operator panel front 26.4 cm/10.4" TFT color display (640 × 480 pixels) mechanical keys	**6FC5203-0AF04-0AA0**

© Siemens 2022

Overview

The SINUMERIK OP 010C operator panel front with 10.4" TFT color display with a resolution of 640 × 480 pixels (VGA) features a 65-key mechanical keypad with 8 + 4 horizontal and 8 vertical softkeys.

The 6 hotkeys are designed with replaceable key covers for machine-specific adaptation. The key covers can be freely inscribed using laser.

The operator panel front is secured from the rear using special clamps included in the scope of supply.

Benefits

- Easy, reliable operator control and monitoring thanks to the integral keyboard with mechanical keys
- Fast selection of the main functions using the 6 integral hotkeys

Design

The SINUMERIK OP 010C operator panel front is connected to the SINUMERIK PCU (SIMATIC IPC for SINUMERIK) by flat ribbon cables.

Interfaces:

- 1 × USB 1.1 type A (front)
- 2 × flat ribbon cables for connecting the PCU

Integration

The SINUMERIK OP 010C operator panel front can be used for:

- SINUMERIK 840D sl:
  NCU 710.3B PN/NCU 720.3B PN/NCU 730.3B PN
- SINUMERIK PCU 50.5 Windows 7
- SINUMERIK TCU 30.3

Technical specifications

Article number	6FC5203-0AF01-0AA0
Product brand name	SINUMERIK
Product short term	OP 010C
Product designation	Operator panel front
Screen diagonal	10.4 in
Design of the display	TFT color VGA
Screen resolution of the display	640 pixel × 480 pixel
Supply voltage at DC	5 V
• Note	Via PCU or TCU
Active power consumption	
• typical	10 W
• maximum	16 W
Degree of protection	
• front	IP54
• rear	IP00
Environmental category acc. to IEC 60721-3-3	Condensation and icing excluded. Low air temperature 0 °C (32 °F).
Relative humidity at 25 °C (77 °F), during	
• storage	5 ... 95 %
• transport	5 ... 95 %
• operation	5 ... 95 %
Ambient temperature, during	
• storage	-20 ... +55 °C (-4 ... +131 °F)
• transport	-20 ... +55 °C (-4 ... +131 °F)
• operation	
- front	0 ... 45 °C (32 ... 113 °F)
- rear	0 ... 55 °C (32 ... 131 °F)
Width	483 mm (19.01575 in)
Height	310 mm (12.20472 in)
Depth	30 mm (1.1811 in)
• Note	Without USB protective cover on the front
Installation depth	20 mm (0.7874 in)
• Note	Clearance + 10 mm (0.39 in)
Mounting surface	
• section width	450 mm (17.71654 in)
• section height	290 mm (11.41732 in)
Net weight	5 kg (11.02311 lb)
Certificate of suitability	CE / cULus

Selection and ordering data

Description	Article No.
SINUMERIK OP 010C operator panel front 26.4 cm/10.4" TFT color display (640 × 480 pixels) mechanical keys	**6FC5203-0AF01-0AA0**
Accessories	
Square key cover, can be labeled (1 set) 90 × ergo gray, 20 × medium gray, 20 × red, 20 × yellow, 20 × green	**6FC5248-0AF12-0AA0**

© Siemens 2022

3

Overview

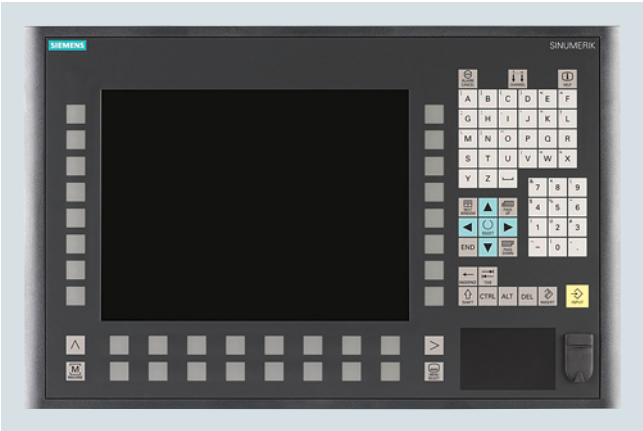

The SINUMERIK OP 012 operator panel front with 12.1" TFT color display with LED backlight and a resolution of 800 × 600 pixels (SVGA) features a 59-key membrane keypad as well as 2 × (8 + 2) horizontal and 2 × 8 vertical softkeys. The integral touchpad opens up a new type of operator control. The 2 × 8 vertical softkeys can be used as direct keys via the PLC.

The operator panel front is secured from the rear using special clamps included in the scope of supply.

Benefits

- Good monitoring and operation thanks to the 12.1" TFT color display
- Improved energy efficiency thanks to the LED backlight
- Easy to operate thanks to integral keyboard and touchpad

Design

The SINUMERIK OP 012 operator panel front is connected to the SINUMERIK PCU (SIMATIC IPC for SINUMERIK) by flat ribbon cables.

Interfaces:

- 1 × USB 1.1 type A (front)
- 2 × flat ribbon cables for connecting the PCU

Integration

The SINUMERIK OP 012 operator panel front can be used for:

- SINUMERIK 840D sl:
  NCU 710.3B PN/NCU 720.3B PN/NCU 730.3B PN
- SINUMERIK PCU (SIMATIC IPC for SINUMERIK)
- SINUMERIK TCU 30.3

Technical specifications

Article number	6FC5203-0AF02-0AA2
Product brand name	SINUMERIK
Product short term	OP 012
Product designation	Operator panel front
Screen diagonal	12.1 in
Design of the display	TFT color SVGA with LED backlight
Screen resolution of the display	800 pixel × 600 pixel
Supply voltage at DC	5 V
• Note	Via PCU or TCU
Active power consumption	
• typical	5 W
• maximum	6 W
• Note	Without load on the USB interface
Degree of protection	
• front	IP65
• rear	IP00
Environmental category acc. to IEC 60721-3-3	Condensation and icing excluded. Low air temperature 0 °C (32 °F).
Relative humidity at 25 °C (77 °F), during	
• storage	5 ... 95 %
• transport	5 ... 95 %
• operation	5 ... 95 %
Ambient temperature, during	
• storage	-20 ... +55 °C (-4 ... +131 °F)
• transport	-20 ... +55 °C (-4 ... +131 °F)
• operation	
- front	0 ... 45 °C (32 ... 113 °F)
- rear	0 ... 55 °C (32 ... 131 °F)
Width	483 mm (19.01575 in)
Height	310 mm (12.20472 in)
Depth	30 mm (1.1811 in)
• Note	Without USB protective cover on the front
Installation depth	20 mm (0.7874 in)
• Note	Clearance + 10 mm (0.39 in)
Mounting surface	
• section width	450 mm (17.71654 in)
• section height	290 mm (11.41732 in)
Net weight	5 kg (11.02311 lb)
Certificate of suitability	CE / cULus

Selection and ordering data

Description	Article No.
SINUMERIK OP 012 operator panel front 30.7 cm/12.1" TFT color display (800 × 600 pixels) with LED backlight membrane keys and touchpad	**6FC5203-0AF02-0AA2**
Accessories	
Slide-in labels for inscribing For SINUMERIK OP 012 operator panel front 3 sheets in DIN A4 format	**6FC5248-0AF08-0AA0**

© Siemens 2022

Overview

The SINUMERIK OP 015A operator panel front with 15" TFT color display with LED backlight and a resolution of 1024 × 768 pixels (XGA) features a 62-key membrane keypad as well as 2 × (8 + 2) horizontal and 2 × 8 vertical softkeys and an integral mouse. The 2 × 8 vertical softkeys can be used as direct keys via the PLC.

The operator panel front is secured from the rear using special clamps included in the scope of supply.

Benefits

- Very user-friendly operator control and monitoring thanks to 15" TFT color display
- Easy operation thanks to integral keyboard and mouse

Design

The SINUMERIK OP 015A operator panel front is connected to the SINUMERIK PCU (SIMATIC IPC for SINUMERIK) by cables.

Interfaces:

- 1 × USB 1.1 type A (front)
- 2 × lines for connecting the SINUMERIK PCU

Integration

The SINUMERIK OP 015A operator panel front can be used for:

- SINUMERIK 840D sl:
  NCU 710.3B PN/NCU 720.3B PN/NCU 730.3B PN
- SINUMERIK PCU (SIMATIC IPC for SINUMERIK)
- SINUMERIK TCU 30.3

Technical specifications

Article number	6FC5203-0AF05-0AB1
Product brand name	SINUMERIK
Product short term	OP 015A
Product designation	Operator panel front
Screen diagonal	15 in
Design of the display	TFT color XGA with LED backlight
Screen resolution of the display	1024 pixel × 768 pixel
Supply voltage at DC	5 V
• Note	Via PCU or TCU
Active power consumption	
• typical	15 W
• maximum	25 W
Degree of protection	
• front	IP65
• rear	IP00
Environmental category acc. to IEC 60721-3-3	Condensation and icing excluded. Low air temperature 0 °C (32 °F).
Relative humidity at 25 °C (77 °F), during	
• storage	5 ... 95 %
• transport	5 ... 95 %
• operation	5 ... 95 %
Ambient temperature, during	
• storage	-20 ... +55 °C (-4 ... +131 °F)
• transport	-20 ... +55 °C (-4 ... +131 °F)
• operation	
- front	0 ... 45 °C (32 ... 113 °F)
- rear	0 ... 55 °C (32 ... 131 °F)
Width	483 mm (19.01575 in)
Height	355 mm (13.97638 in)
Depth	53 mm (2.08661 in)
• Note	Without USB protective cover on the front
Installation depth	42 mm (1.65354 in)
• Note	Clearance + 10 mm (0.39 in)
Mounting surface	
• section width	450 mm (17.71654 in)
• section height	335 mm (13.18898 in)
Net weight	8.4 kg (18.51883 lb)
Certificate of suitability	CE / cULus

Selection and ordering data

Description	Article No.
SINUMERIK OP 015A operator panel front 38 cm/15" TFT color display (1024 × 768 pixels) with LED backlight membrane keys and mouse	**6FC5203-0AF05-0AB1**
Accessories	
Slide-in labels for inscribing For SINUMERIK operator panel front OP 015A for vertical softkeys 3 sheets in DIN A4 format	**6FC5248-0AF24-0AA0**

© Siemens 2022

Overview

The mobile SINUMERIK HT 2 handheld terminal is suitable for manually operating machine tools, e.g. for setup.

It has been specifically developed with easy handling, ruggedness, and fitness for purpose in mind. The SINUMERIK HT 2 fits seamlessly into the operator component environment of the SINUMERIK system.

Benefits

- Mobility for operator control and monitoring
- 2 enabling buttons for right-handed or left-handed operators
- Easy hot swapping during operation (hot plug and play), without triggering the emergency stop in combination with the PN Plus connection box and without an additional, manual actuating element/keyswitch.
  Hot swapping during operation without triggering an emergency stop on basic versions requires a manual actuating element/keyswitch and terminating plug.
- Rugged, light, and ergonomically designed
- Intuitive axis feed thanks to rugged, magnetic handwheel
- All keys can be freely configured and inscribed by the user (default key assignment preconfigured on shipped units)
- Slide-in labels for inscribing (accessory)
- Flexible mounting with different types of holders:
  Magnetic clamps or hooks (accessories)
- Easily replaceable signal cables, without special tools (accessories)

Design

The SINUMERIK HT 2 is connected via the PN Basic/PN Plus connection box when it is installed somewhere in the plant outside the control cabinet or via the Basic PN connection module when it is installed inside the control cabinet.

Operator controls:

- 20 keys, all can be freely assigned and inscribed by the user
- Emergency stop button 2-channel, 3-step
- 2 enabling buttons (for right-handed and left-handed operators), 2-channel, 3-step
- Rotary override switch
- Magnetic handwheel
- Keyswitch (3 positions, 2 keys)

Key type:

- Membrane keys

Interfaces:

- Connecting cable to PN Basic/PN Plus connection box, Basic PN connection module

Display:

- 4-line display (128 × 64 pixels)

Function

The easily accessible operator controls, ergonomic design and light weight make this unit easy to use, even over long work shifts. Protection class IP65, rubber grips and magnetic handwheel make it suitable for use even when production conditions are rough. The keys can be freely assigned and inscribed as required.

Integration

The SINUMERIK HT 2 handheld terminal can be used for:

- SINUMERIK 840D sl:
  NCU 710.3B PN/NCU 720.3B PN/NCU 730.3B PN
- SIMATIC IPC Windows 10
- SINUMERIK PCU

© Siemens 2022

Integration

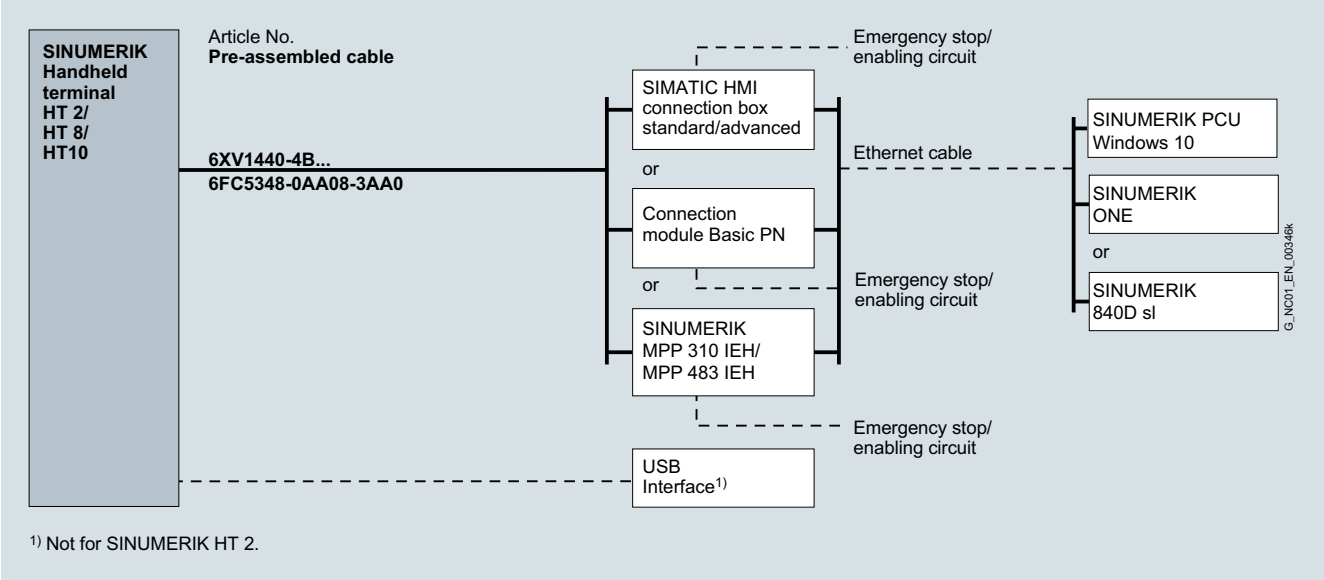

1) Not for SINUMERIK HT 2.

Connection overview for SINUMERIK HT 2/HT 8/HT 10

Technical specifications

Article number	6FC5303-0AA00-2AA0
Product brand name	SINUMERIK
Product short term	HT 2
Product designation	Handheld terminal
Screen resolution of the display	128 × 64 Pixel
Supply voltage at DC	24 V
Active power consumption maximum	2.5 W
Degree of protection	IP65
Environmental category acc. to IEC 60721-3-3	Condensation and icing excluded. Low air temperature 0 °C (32 °F).
Relative humidity at 25 °C (77 °F), during	
• storage	5 ... 95 %
• transport	5 ... 95 %
• operation	5 ... 95 %
Ambient temperature, during	
• storage	-20 ... +55 °C (-4 ... +131 °F)
• transport	-20 ... +55 °C (-4 ... +131 °F)
• operation	0 ... 55 °C (32 ... 131 °F)
Width	100 mm (3.93701 in)
Height	76.2 mm (3 in)
• Note	Without control elements
Depth	255 mm (10.03937 in)
Net weight	0.69 kg (1.52119 lb)
Certificate of suitability	CE, cULus

Selection and ordering data

Description	Article No.
SINUMERIK HT 2 handheld terminal	**6FC5303-0AA00-2AA0**
Accessories	
PN Basic connection box IP65 degree of protection Without automatic emergency stop override for mounting in the system	**6AV6671-5AE01-0AX0**
PN Plus connection box IP65 degree of protection With automatic emergency stop override for mounting in the system	**6AV6671-5AE11-0AX0**
Connection module Basic PN Without automatic emergency stop override for mounting in the control cabinet including terminator	**6FC5303-0AA01-1AA0**
Magnetic clamp For SINUMERIK HT 2	**6FC5348-0AA08-0AA0**
Holder For SINUMERIK HT 2	**6FC5348-0AA08-1AA0**
Slide-in labels for inscribing For SINUMERIK HT 2 3 A4 sheets	**6FC5348-0AA08-2AA0**
Key set For SINUMERIK HT 2	**6AV6574-1AG04-4AA0**
Signal cable For Mobile Panels PROFINET	
• Length 2 m (6.56 ft)	**6XV1440-4BH20**
• Length 5 m (16.4 ft)	**6XV1440-4BH50**
• Length 8 m (26.2 ft)	**6XV1440-4BH80**
• Length 10 m (32.8 ft)	**6XV1440-4BN10**
• Length 15 m (49.2 ft)	**6XV1440-4BN15**
• Length 20 m (65.6 ft)	**6XV1440-4BN20**
• Length 25 m (82 ft)	**6XV1440-4BN25**
Spiral connection cable For SINUMERIK HT 2/HT 8/HT 10 Length 1.5 m (4.92 ft), extendable to 3.5 m (11.5 ft)	**6FC5348-0AA08-3AA0**

© Siemens 2022

Overview

The mobile SINUMERIK HT 8 handheld terminal combines the functions of an operator panel and a machine control panel in a single device, permitting complete operator control and monitoring of machines. It can be used as a supplementary main operator panel or as a secondary control panel.

The supplied touch pen with a holding loop permits easy operation of the touch screen, even when operators are wearing gloves. The safety system is designed to allow personnel to work in the machine's hazard zone.

Benefits

- Mobility for operator control and monitoring
- Pixel-graphics 7.5" TFT color display
- Operation via touch screen, membrane keys and touch pen
- Emergency stop button and 2 enabling buttons for left-handed and right-handed operators
- Easy hot swapping during operation (hot plug and play), without triggering the emergency stop in combination with the PN Plus connection box and without an additional, manual actuating element/keyswitch.
  Hot swapping during operation without triggering an emergency stop on basic versions requires a manual actuating element/keyswitch and terminating plug.
- Rugged, compact and ergonomically designed
- Signal cables easy to replace without special tools (accessories)

Design

The emergency stop button and the 2 enabling buttons (3-step) each have two channels.

Possible connections for SINUMERIK HT 8:

- In the control cabinet via the Basic PN connection module
- At any preferred mounting location in the plant via the Basic or PN Plus connection box

Function

The SINUMERIK HT 8 operates according to the thin client principle. The operating software is already installed on a SINUMERIK NCU/PCU or SIMATIC IPC. Screen content from the NCU/PCU/IPC is transferred to the HT 8 and key information from the HT 8 to the NCU/PCU/IPC via Industrial Ethernet. The HT 8 display shows the same operator interface that is displayed on the standard operator panels of the SINUMERIK control system.

The operator interface can be customized if required (see SINUMERIK Integrate).

Technical specifications

Article number		6FC5403-0AA20-0AA1	6FC5403-0AA20-1AA1
Product brand name		SINUMERIK	SINUMERIK
Product short term		HT 8	HT 8
Product designation		Handheld terminal	Handheld terminal
Product feature		Without handwheel	With handwheel
Screen diagonal	in	7.5	7.5
Design of the display		TFT color VGA	TFT color VGA
Screen resolution of the display	Pixel	640 × 480	640 × 480
Supply voltage at DC	V	24	24
Active power consumption maximum	W	13	13
Degree of protection		IP65	IP65
Environmental category acc. to IEC 60721-3-3		Condensation and icing excluded. Low air temperature 0 °C (32 °F).	Condensation and icing excluded. Low air temperature 0 °C (32 °F).
Relative humidity at 25 °C (77 °F), during			
• storage	%	5 ... 95	5 ... 95
• transport	%	5 ... 95	5 ... 95
• operation	%	5 ... 95	5 ... 95
Ambient temperature, during			
• storage	°C (°F)	-20 ... +55 (-4 ... +131)	-20 ... +55 (-4 ... +131)
• transport	°C (°F)	-20 ... +55 (-4 ... +131)	-20 ... +55 (-4 ... +131)
• operation	°C (°F)	0 ... 55 (32 ... 131)	0 ... 55 (32 ... 131)
Outer diameter of the enclosure	mm (in)	290 (11.41732)	290 (11.41732)
Height	mm (in)	65 (2.55906)	65 (2.55906)
• Note		Without control elements	Without control elements
Net weight	kg (lb)	1.73 (3.814)	1.73 (3.814)
Certificate of suitability		CE, cULus	CE, cULus

© Siemens 2022

Integration

The SINUMERIK HT 8 handheld terminal can be used for:

- SINUMERIK 840D sl:
  NCU 710.3B PN/NCU 720.3B PN/NCU 730.3B PN
- SIMATIC IPC Windows 10
- SINUMERIK PCU

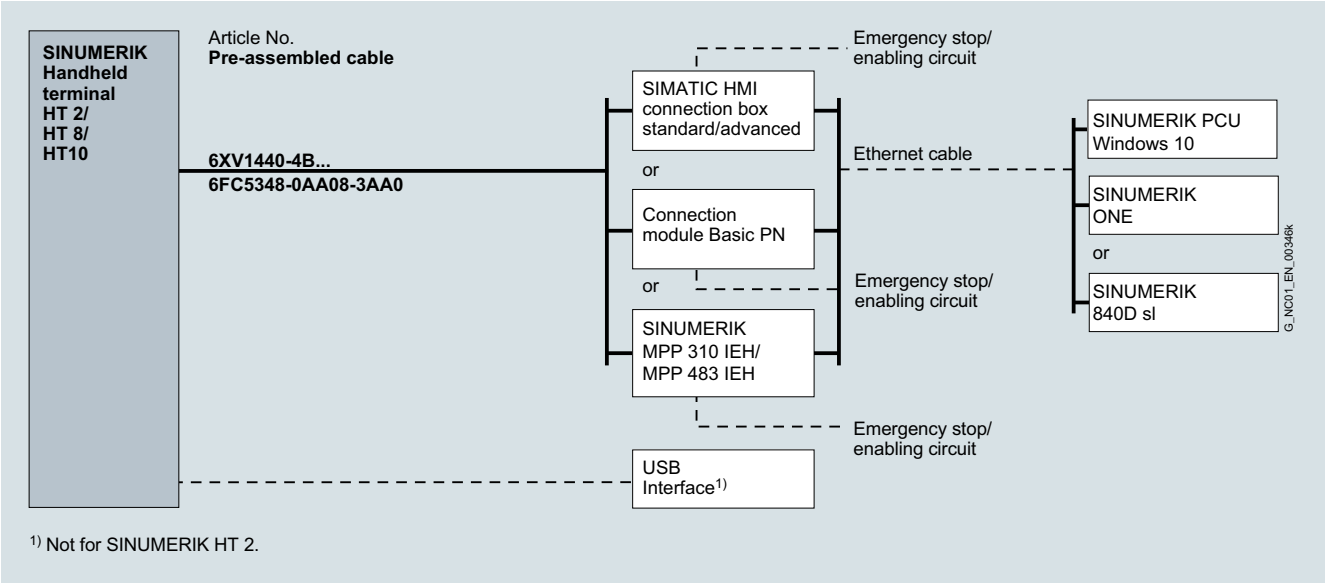

1) Not for SINUMERIK HT 2.

Connection overview for SINUMERIK HT 2/HT 8/HT 10

Selection and ordering data

Description	Article No.
SINUMERIK HT 8 handheld terminal Based on the thin client principle Operating software in the SINUMERIK NCU/PCU or SIMATIC IPC	**6FC5403-0AA20-0AA1**
SINUMERIK HT 8 handheld terminal with handwheel Based on the thin client principle Operating software in the SINUMERIK NCU/PCU or SIMATIC IPC	**6FC5403-0AA20-1AA1**
Accessories	
PN Basic connection box IP65 degree of protection Without automatic emergency stop override for mounting in the system	**6AV6671-5AE01-0AX0**
PN Plus connection box IP65 degree of protection With automatic emergency stop override for mounting in the system	**6AV6671-5AE11-0AX0**
Connection module Basic PN Without automatic emergency stop override for mounting in the control cabinet with terminating plug	**6FC5303-0AA01-1AA0**

Description	Article No.
Accessories *(continued)*	
Wall holder For safe storage of the SINUMERIK HT 8, also suitable for stationary operation	**6AV6574-1AF04-4AA0**
Touch pen with holding loop For SINUMERIK HT 8	**6FC5348-0AA08-4AA0**
Protective film (2 units) For MP 277 and SINUMERIK HT 8	**6AV6671-5BC00-0AX0**
Signal cable For Mobile Panels PROFINET	
• Length 2 m (6.56 ft)	**6XV1440-4BH20**
• Length 5 m (16.4 ft)	**6XV1440-4BH50**
• Length 8 m (26.2 ft)	**6XV1440-4BH80**
• Length 10 m (32.8 ft)	**6XV1440-4BN10**
• Length 15 m (49.2 ft)	**6XV1440-4BN15**
• Length 20 m (65.6 ft)	**6XV1440-4BN20**
• Length 25 m (82 ft)	**6XV1440-4BN25**
Spiral connection cable For SINUMERIK HT 2/HT 8/HT 10 Length 1.5 m (4.92 ft), extendable to 3.5 m (11.5 ft)	**6FC5348-0AA08-3AA0**

© Siemens 2022

Overview

The mobile handheld terminal SINUMERIK HT 10 is the new multifunctional handheld terminal in the SINUMERIK blackline plus design. It allows convenient handling, which is achieved by its ergonomic, lightweight design and the 10" multi-touch display.

The SINUMERIK HT 10 combines the functions of an operator panel and a machine control panel in one device. It can therefore be used to set up, operate and monitor a machine. As it is based on the thin client principle, the SINUMERIK HT 10 can be used either as a primary operator panel or as a secondary operator panel. The screen contents are transmitted via Industrial Ethernet from the SINUMERIK NCU or SINUMERIK PCU to the handheld terminal.

The SINUMERIK HT 10 is optimally designed for the requirements of the machine tool market.

Benefits

- Mobility for operator control and monitoring
- Ergonomic design, low weight and can rest on the left forearm
- Multi-touch operation and gesture control via touch screen, can also be operated when operators are wearing gloves
- Integrated operating philosophy for a stationary operator panel (e.g. display manager)
- Automatic emergency stop override in conjunction with the SIMATIC HMI connection box Advanced, which can simply be plugged and unplugged during operation
- Wall holder as an optional accessory: The HT 10 can be kept securely and operated as a stationary operator panel in the wall holder.

Design

- 10.1" TFT multi-touch display
- Rotary override switch (19 positions)
- Handwheel (only for SINUMERIK HT 10 6FC5403-0AA21-1AA1)
- 7 mechanical function keys with LED feedback via the key
- Touchkeys: User-defined key functions on predefined, reserved area of the screen, selectable with the U key
- Unlit emergency stop button (2-channel)
- Handle with enabling button (3-step) and USB interface

Technical specifications

Article number		6FC5403-0AA21-0AA1	6FC5403-0AA21-1AA1
Product brand name		SINUMERIK	SINUMERIK
Product short term		HT 10	HT 10
Product designation		Handheld terminal	Handheld terminal
Product feature		Without handwheel	With handwheel
Screen diagonal	in	10.1	10.1
Design of the display		TFT color display	TFT color display
Screen resolution of the display	pixel	1280 × 800	1280 × 800
Supply voltage at DC	V	24	24
Transmission link maximum	m (ft)	25 (82.021)	25 (82.021)
Protection class without shaft input		IP65	IP65
Environmental category acc. to IEC 60721-3-3		Condensation, ice formation, dripping water, spraying water, splashing water and water jets are not permitted	Condensation, ice formation, dripping water, spraying water, splashing water and water jets are not permitted
Relative humidity at 25 °C (77 °F), during			
• storage	%	5 ... 95	5 ... 95
• transport	%	5 ... 95	5 ... 95
• operation	%	5 ... 95	5 ... 95
Ambient temperature, during			
• storage	°C (°F)	-20 ... +55 (-4 ... +131)	-20 ... +55 (-4 ... +131)
• transport	°C (°F)	-20 ... +55 (-4 ... +131)	-20 ... +55 (-4 ... +131)
• operation	°C (°F)	0 ... 45 (32 ... 113)	0 ... 45 (32 ... 113)
Width	mm (in)	327 (12.87402)	327 (12.87402)
Height	mm (in)	102 (4.01575)	102 (4.01575)
Depth	mm (in)	232 (9.13386)	232 (9.13386)
Net weight	kg (lb)	1.5 (3.30693)	1.5 (3.30693)
• Note		Without connecting cable	Without connecting cable
Certificate of suitability		CE, cULus, EAC, KC, RCM	CE, cULus, EAC, KC, RCM

© Siemens 2022

Integration

The SINUMERIK HT 10 handheld terminal can be used for:

- SINUMERIK 840D sl
  NCU 710.3B PN/NCU 720.3B PN/NCU 730.3B PN (from SW V4.93)
- SINUMERIK PCU
  SIMATIC IPC for SINUMERIK with PCU base software Windows 10 (from SW V13.0)

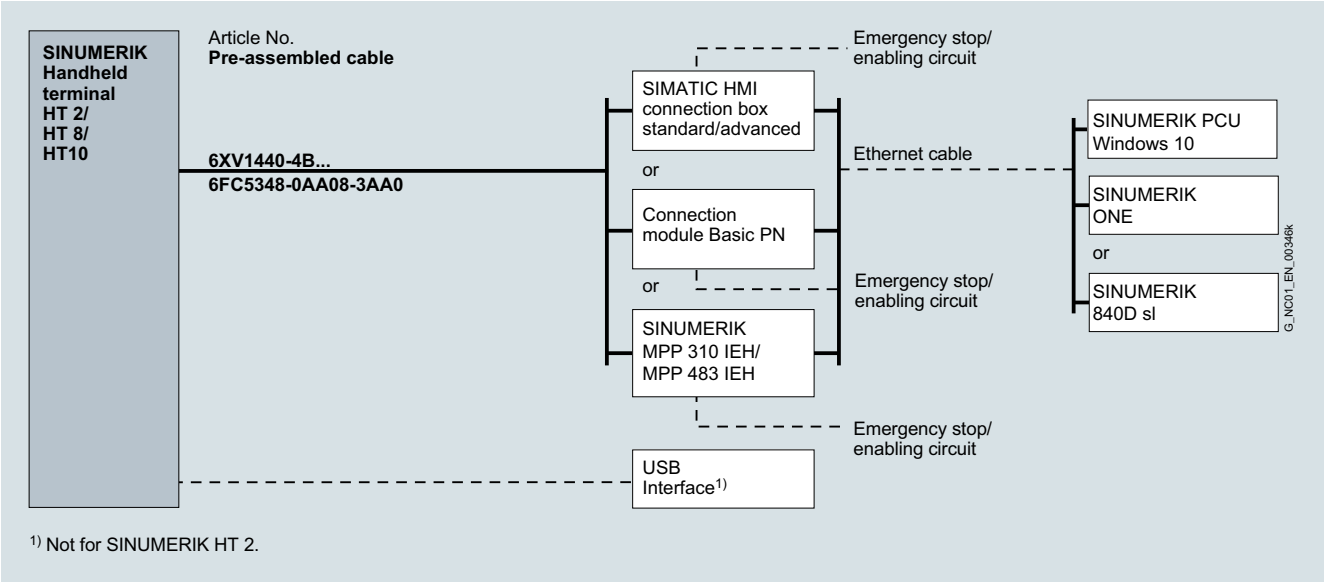

Connection overview for SINUMERIK HT 2/HT 8/HT 10

Selection and ordering data

Description	Article No.
SINUMERIK HT 10 handheld terminal Based on the thin client principle Operating software in the SINUMERIK NCU/PCU or SIMATIC IPC	**6FC5403-0AA21-0AA1**
SINUMERIK HT 10 handheld terminal with handwheel Based on the thin client principle Operating software in the SINUMERIK NCU/PCU or SIMATIC IPC	**6FC5403-0AA21-1AA1**
Accessories	
SIMATIC HMI connection box Standard IP65 degree of protection Without automatic emergency stop override for mounting in the system	**6AV2125-2AE13-0AX0**
SIMATIC HMI connection box Advanced IP65 degree of protection With automatic emergency stop override for mounting in the system	**6AV2125-2AE23-0AX0**
Connection module Basic PN Without automatic emergency stop override for mounting in the control cabinet with terminating plug	**6FC5303-0AA01-1AA0**
Wall holder For safe storage of the SINUMERIK HT 10, also suitable for stationary operation	**6FC5348-0AA20-0AA0**

Description	Article No.
Accessories *(continued)*	
Touch pen system For the SINUMERIK HT 10	**6AV6881-0AV21-0AA0**
Touch pen replacement caps For touch pen system	**6AV2181-8AV60-0AX0**
Signal cable For Mobile Panels PROFINET	
• Length: 2 m (6.56 ft)	**6XV1440-4BH20**
• Length: 5 m (16.4 ft)	**6XV1440-4BH50**
• Length: 8 m (26.3 ft)	**6XV1440-4BH80**
• Length: 10 m (32.8 ft)	**6XV1440-4BN10**
• Length: 15 m (49 ft)	**6XV1440-4BN15**
• Length: 20 m (66 ft)	**6XV1440-4BN20**
• Length: 25 m (82 ft)	**6XV1440-4BN25**
Spiral connection cable For SINUMERIK HT 2/HT 8/HT 10 Length: 1.5 m (4.92 ft), stretches to 3.5 m (11.48 ft)	**6FC5348-0AA08-3AA0**

© Siemens 2022

Overview

This convenient, ergonomically designed mini handheld unit with a rugged metal connector is suitable for setting up and operating standard machines in the job shop area.

Benefits

- Mobile positioning of axes
- Easy graduation of coarse, medium and fine infeed facilitates fast, increment-precise positioning
- Rugged and compact design

Design

- Emergency stop implemented in 2 channels with 4-wire connection
- 3-position enabling button implemented in 2 channels with 3-wire connection
- Rapid traverse key and 2 ± keys
- 1 handwheel to traverse the axes in jog mode
- Facility to connect rotary switches for selecting up to 5 axes
- 3 function keys for customized applications – user-assignable with slide-in labels for inscribing
- Interface for connection kit (accessory)
- Optional angle socket for a cable outlet direction rotated through 90° (accessory). The angle socket can only be used in conjunction with the non-assembled connection kit.
- Mounting with integrated magnetic clamp or a holder (accessory)

Integration

The mini-handheld unit can be used for:

- SINUMERIK 840D sl

Selection and ordering data

Description	Article No.
Mini handheld unit for SINUMERIK 3-step enabling button incl. magnetic clamps and connecting cable with metal connector	
• Coiled connecting cable Length 2.1 m (6.89 ft), stretches to 3.5 m (11.48 ft)	**6FX2007-1AD03**
• Straight cable Length 5 m (16.41 ft)	**6FX2007-1AD13**
Accessories	
Connection kit for mini handheld unit, non-assembled Connection socket for self-assembly Version with metal connector for connection to machine control panel without Industrial Ethernet, with terminator	**6FX2006-1BG03**
Connection kit for mini handheld unit, assembled Connection socket wired up Version with metal connector for connection to machine control panel with Industrial Ethernet, with terminator	**6FX2006-1BG11**
Connection kit for mini handheld unit, assembled Version with metal connector for connection to machine control panel with PROFINET, with terminator for SINUMERIK 828D	**6FX2006-1BG20**
90° angle socket For connection kit, non-assembled 6FX2006-1BG03 Metal version	**6FX2006-1BG56**
Holder For mini handheld units 6FX2007-1AD.3 and electronic handwheel in housing 6FC9320-5DE02	**6FX2006-1BG70**

© Siemens 2022

Technical specifications

Article number		6FX2007-1AD03	6FX2007-1AD13
Product brand name		SINUMERIK	SINUMERIK
Product designation		Mini handheld unit	Mini handheld unit
Product feature		With coiled cable	With straight cable
Supply voltage at DC	V	24	24
Supply voltage at DC			
• for handwheel	V	5	5
• Note		For emergency stop button, enabling buttons and switching signals	For emergency stop button, enabling buttons and switching signals
Design of the interface		RS422	RS422
Number of pulses per revolution maximum		100	100
Transmission link of the handheld unit to the NCU/PCU maximum	m (ft)	25 (82.021)	25 (82.021)
• Note		When using the handwheel	When using the handwheel
Protection class without shaft input		IP65	IP65
Environmental category acc. to IEC 60721-3-3		Condensation and icing excluded. Low air temperature 0 °C (32 °F).	Condensation and icing excluded. Low air temperature 0 °C (32 °F).
Relative humidity at 25 °C (77 °F), during			
• storage	%	5 ... 95	5 ... 95
• transport	%	5 ... 95	5 ... 95
• operation	%	5 ... 95	5 ... 95
Ambient temperature, during			
• storage	°C (°F)	-20 ... +60 (-4 ... +140)	-20 ... +60 (-4 ... +140)
• transport	°C (°F)	-20 ... +60 (-4 ... +140)	-20 ... +60 (-4 ... +140)
• operation	°C (°F)	0 ... 55 (32 ... 131)	0 ... 55 (32 ... 131)
Width	mm (in)	90 (3.54331)	90 (3.54331)
Height	mm (in)	67 (2.6378)	67 (2.6378)
Depth	mm (in)	180 (7.08661)	180 (7.08661)
• Note		With emergency stop button	With emergency stop button
Net weight	kg (lb)	0.5 (1.10231)	0.5 (1.10231)
• Note		Without connecting cable	Without connecting cable
Certificate of suitability		CE / UL	CE / UL

© Siemens 2022

Overview

The electronic handwheels enable an axis to be traversed manually. The axis selected via the CNC can be positioned so that the axes are parallel.

The portable electronic handwheel is intended for use directly at the machine.

Benefits

- Positioning of axes
- Rugged and compact housing variant

Design

- Handwheels for installation by user – with or without front panel (the front panel can be removed)
- Portable handwheel in enclosure:
  - Connection by means of a spiral cable
  - Mounting with integrated magnetic clamp or a holder (accessory)

Function

The electronic handwheels feature a magnetic latching facility which supports increment-precise traversing. The handwheels generate 5 V DC TTL signals. A version with 24 V DC and an HTL interface is available for connection to I/O modules.

Integration

The electronic handwheel can be used for:

- SINUMERIK 840D sl

Technical specifications

Article number		6FC9320-5DB01	6FC9320-5DC01	6FC9320-5DH01	6FC9320-5DM00	6FC9320-5DF01	6FC9320-5DE02
Product brand name		SINUMERIK	SINUMERIK	SINUMERIK	SINUMERIK	SINUMERIK	SINUMERIK
Product designation		Electronic handwheel	Electronic handwheel	Electronic handwheel	Electronic handwheel	Electronic handwheel	Electronic handwheel
Product feature		With front panel 120 mm x 120 mm (4.72 in x 4.72 in)	With front panel 76.2 mm x 76.2 mm (3 in x 3 in)	With front panel 76.2 mm x 76.2 mm (3 in x 3 in)	Without front panel, with setting wheel	Without front panel, without setting wheel	Portable in housing with coiled cable
Supply voltage at DC	V	5	5	24	5	5	5
Consumed current maximum	mA	60	60	15	60	60	80
Design of the interface		TTL / RS 422	TTL / RS 422	HTL	TTL / RS 422	TTL / RS 422	TTL / RS 422
Phase displacement angle between signal A and signal B	°	90	90	90	90	90	90
Number of pulses per revolution maximum		100	100	100	100	100	100
Minimum actuating torque in activation direction	N·m	0.08	0.04	0.04	0.04	0.04	0.04
Electrical output frequency maximum	kHz	2	2	2	2	2	2
Transmission link maximum	m (ft)	25 (82.021)	25 (82.021)	25 (82.021)	25 (82.021)	25 (82.021)	20 (65.6168)
Degree of protection		-	-	-	-	-	IP65
Degree of protection							
• front		IP65	IP65	IP65	IP65	IP65	-
• rear		IP50	IP50	IP50	IP50	IP50	-
Environmental category acc. to IEC 60721-3-3		Condensation and icing excluded. Low air temperature 0 °C (32 °F).	Condensation and icing excluded. Low air temperature 0 °C (32 °F).	Condensation and icing excluded. Low air temperature 0 °C (32 °F).	Condensation and icing excluded. Low air temperature 0 °C (32 °F).	Condensation and icing excluded. Low air temperature 0 °C (32 °F).	Condensation and icing excluded. Low air temperature 0 °C (32 °F).
Relative humidity at 25 °C (77 °F), during							
• storage	%	5 ... 95	5 ... 95	5 ... 95	5 ... 95	5 ... 95	5 ... 95
• transport	%	5 ... 95	5 ... 95	5 ... 95	5 ... 95	5 ... 95	5 ... 95
• operation	%	5 ... 95	5 ... 95	5 ... 95	5 ... 95	5 ... 95	5 ... 95

© Siemens 2022

Technical specifications

Article number		6FC9320-5DB01	6FC9320-5DC01	6FC9320-5DH01	6FC9320-5DM00	6FC9320-5DF01	6FC9320-5DE02
Product brand name		SINUMERIK	SINUMERIK	SINUMERIK	SINUMERIK	SINUMERIK	SINUMERIK
Product designation		Electronic handwheel	Electronic handwheel	Electronic handwheel	Electronic handwheel	Electronic handwheel	Electronic handwheel
Product feature		With front panel 120 mm x 120 mm (4.72 in x 4.72 in)	With front panel 76.2 mm x 76.2 mm (3 in x 3 in)	With front panel 76.2 mm x 76.2 mm (3 in x 3 in)	Without front panel, with setting wheel	Without front panel, without setting wheel	Portable in housing with coiled cable
Ambient temperature, during							
• storage	°C (°F)	-25 ... +55 (-13 ... +131)	-25 ... +55 (-13 ... +131)	-25 ... +55 (-13 ... +131)	-25 ... +55 (-13 ... +131)	-25 ... +55 (-13 ... +131)	-25 ... +55 (-13 ... +131)
• transport	°C (°F)	-40 ... +70 (-40 ... +158)	-40 ... +70 (-40 ... +158)	-40 ... +70 (-40 ... +158)	-40 ... +70 (-40 ... +158)	-40 ... +70 (-40 ... +158)	-40 ... +70 (-40 ... +158)
• operation	°C (°F)	0 ... 55 (32 ... 131)	0 ... 55 (32 ... 131)	0 ... 55 (32 ... 131)	0 ... 55 (32 ... 131)	0 ... 55 (32 ... 131)	0 ... 55 (32 ... 131)
Outer diameter of the enclosure	mm (in)	-	-	-	58.5 (2.30315)	50 (1.9685)	-
Width	mm (in)	120 (4.72441)	76.2 (3)	76.2 (3)	-	-	85 (3.34646)
Height	mm (in)	120 (4.72441)	76.2 (3)	76.2 (3)	-	-	160 (6.29921)
Depth	mm (in)	81.8 (3.22047)	81.8 (3.22047)	81.8 (3.22047)	83.8 (3.29921)	64.3 (2.5315)	67 (2.6378)
Net weight	kg (lb)	0.7 (1.54324)	0.4 (0.88185)	0.4 (0.88185)	0.3 (0.66139)	0.2 (0.44092)	0.3 (0.66139)
• Note		-	-	-	-	-	Without connecting cable
Certificate of suitability		CE, cULus	CE, cULus	CE, cULus	CE, cULus	CE, cULus	CE, cULus

Selection and ordering data

Description	Article No.
Electronic handwheel	
• With front panel 120 mm × 120 mm (4.72 in × 4.72 in), with setting wheel, 5 V DC, RS422	**6FC9320-5DB01**
• With front panel 76.2 mm × 76.2 mm (3 in × 3 in), with setting wheel 5 V DC, RS422	**6FC9320-5DC01**
• Portable in housing, with setting wheel, 5 V DC, RS422 spiral cable, length 2.5 m (8.20 ft)	**6FC9320-5DE02**
• With front panel 76.2 mm × 76.2 mm (3 in × 3 in), with setting wheel 24 V DC, HTL	**6FC9320-5DH01**
• Without front panel, with small setting wheel 5 V DC, RS422	**6FC9320-5DM00**
• Without front panel, without setting wheel, for installation 5 V DC, RS422	**6FC9320-5DF01**

Description	Article No.
Accessories	
Adapter set For installation in front panel with 3-point fixing	**6FC9320-5DN00**
Flange socket For portable handwheel	**6FC9341-1AQ**
Holder For mini handheld units 6FX2007-1AD.3 and electronic handwheel in housing 6FC9320-5DE02	**6FX2006-1BG70**
Signal cable, pre-assembled For connecting an electronic handwheel to the machine control panel Length max. 25 m (82 ft) [1]	6FX8002-2CP00-....

[1] For complete article number and length code, see MOTION-CONNECT connection systems.

© Siemens 2022

Dimensional drawings

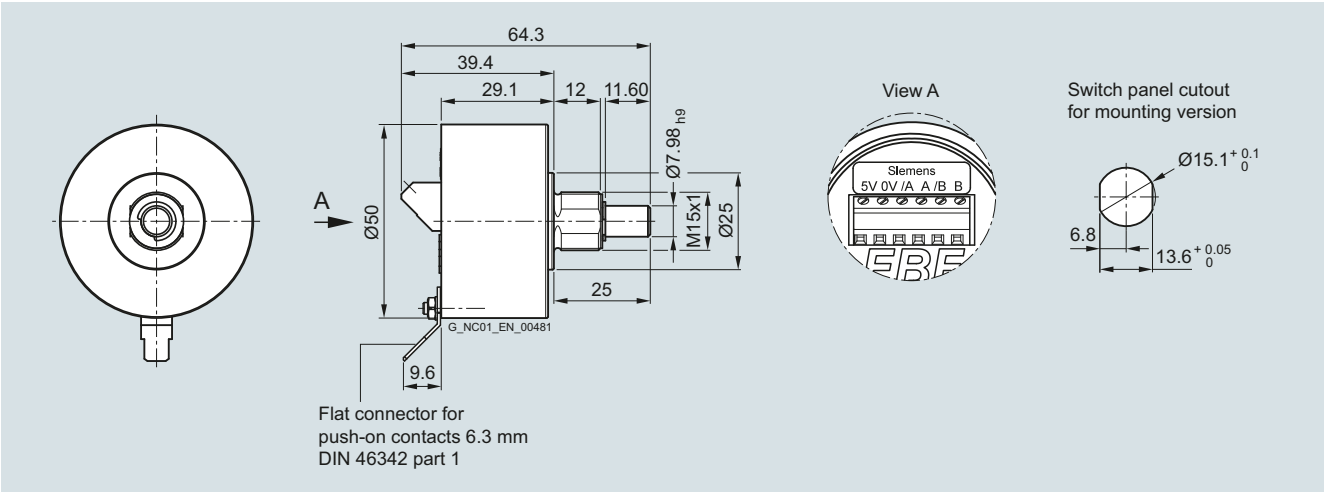

Electronic handwheel without front panel and without setting wheel

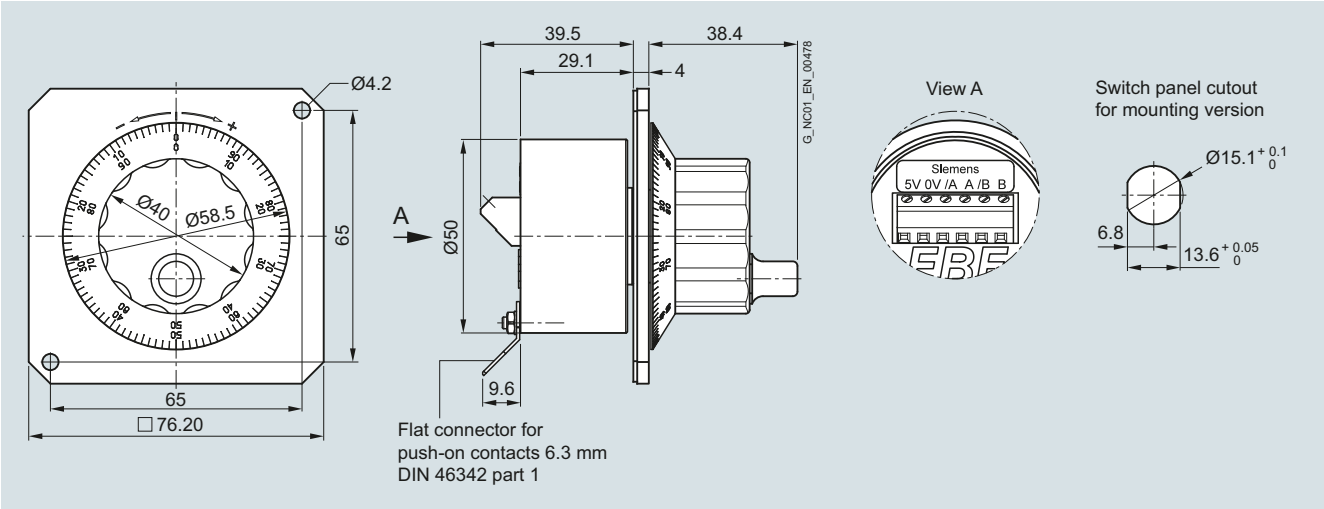

Electronic handwheels with 76.2 mm × 76.2 mm front panel (3 in × 3 in)

© Siemens 2022

Dimensional drawings

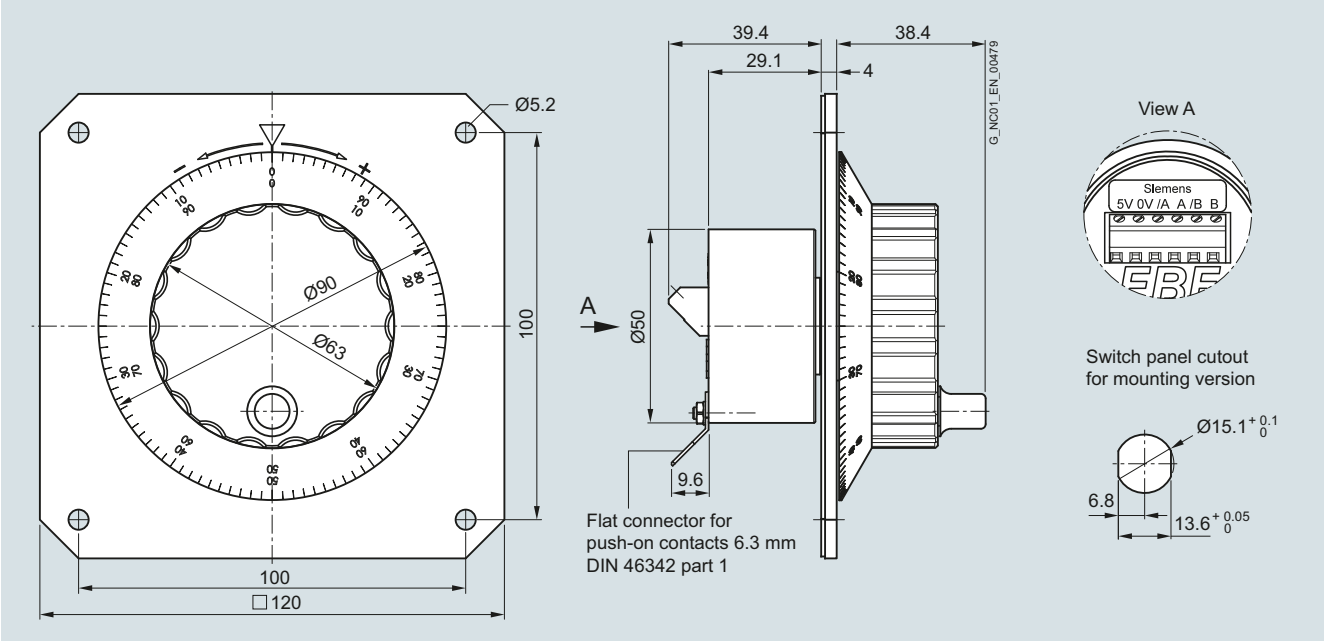

Electronic handwheel with 120 mm × 120 mm front panel (4.72 in × 4.72 in)

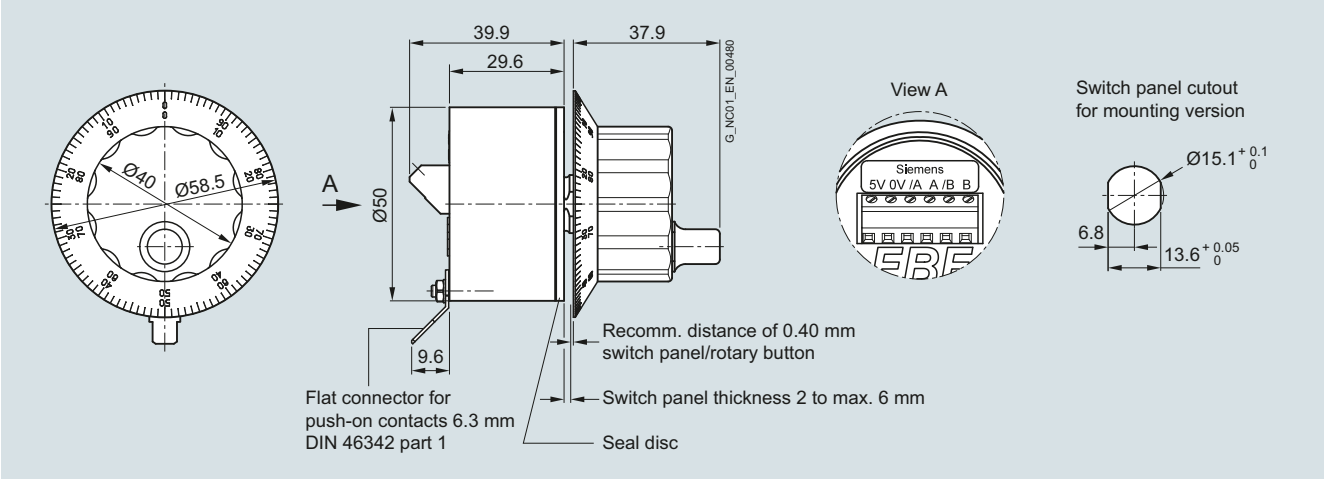

Electronic handwheel without front panel with small setting wheel

© Siemens 2022

Overview

The SINUMERIK MCP 398C machine control panel enables user-friendly operation of the machine functions on complex machining stations. It is suitable for machine-level operation of milling, turning, grinding and special machines.

In addition to the standard elements for machine control, freely assignable slots can be integrated with the EM 66, EM 131 or EM 187 expansion modules for connecting further control devices, e.g. for pushbuttons, USB interface, Ethernet interface. The EM 131 also has space for a third override switch, a handwheel or other operator controls. The function of the SINUMERIK MCP 398C can be extended considerably by fitting additional keys and the EKS identification system (Euchner).

All keys are designed with replaceable key covers for machine-specific adaptations. The key covers can be freely inscribed using laser. Transparent key covers can be used as an alternative.

The machine control panel is secured from the rear using special clamps supplied with the panel.

Design

Operator controls:

- Mechanical short-stroke keys
- Operating mode and function keys:
  - 50 keys with assigned LEDs, 17 of which are freely assignable customer keys in the standard assignment
  - Direction keys for milling machines with rapid traverse override (key covers for direction keys for turning machines are supplied)
- Spindle control with spindle override (rotary switch with 16 positions)
- Feedrate control with feedrate/rapid traverse override (rotary switch with 23 positions)
- Keyswitch (four positions and three different keys)
- Emergency stop pushbutton, two contact blocks (1 NO + 1 NC each)

Interfaces:

- 2 Ethernet interfaces (transmission rate for IE and PN: 10/100 Mbps)
- 9 customer-specific inputs, e.g. for illuminated pushbuttons
- 6 customer-specific outputs
- 2 handwheels (sub-D)
- 1 rotary override switch

Extensions:

- EM 66 for 19" operator panels: 3 to 4 slots for control devices (d = 22 mm or 16 mm)
- EM 131 for 22" operator panels: 6 slots for control devices (d = 22 mm or 16 mm) + 1 slot for rotary switch/handwheel
- EM 187 for 24" operator panels: 8 slots for control devices (d = 22 mm or 16 mm) + 1 slot for rotary switch/handwheel

Integration

The SINUMERIK MCP 398C machine control panel can be used for:

- SINUMERIK 840D sl from software version 4.8 SP1: NCU 710.3B PN/NCU 720.3B PN/NCU 730.3B PN

© Siemens 2022

Technical specifications

Article number	6FC5303-0AF25-0AA0
Product brand name	SINUMERIK
Product short term	MCP 398C
Product designation	Machine control panel
Supply voltage at DC	24 V
Active power consumption maximum	29.3 W
Transmission link maximum	100 m (109.36133 yd)
Degree of protection	
• front	IP54
• rear	IP00
• Note	Mounting frame IP65
Environmental category acc. to IEC 60721-3-3	Condensation and icing excluded. Low air temperature 0 °C (32 °F).
Relative humidity at 25 °C (77 °F), during	
• storage	5 ... 95 %
• transport	5 ... 95 %
• operation	5 ... 95 %
Ambient temperature, during	
• storage	-25 ... +55 °C (-13 ... +131 °F)
• transport	-40 ... +70 °C (-40 ... +158 °F)
• operation	
- front	0 ... 45 °C (32 ... 113 °F)
- rear	0 ... 55 °C (32 ... 131 °F)
Width	398 mm (15.66929 in)
Height	225 mm (8.85827 in)
Depth	110.4 mm (4.34646 in)
• Note	With connector for handwheel connection
Installation depth	63 mm (2.48032 in)
• Note	With connector for handwheel connection clearance + 10 mm (0.39 in)
Mounting surface	
• section width	379.5 mm (14.94095 in)
• section height	206.5 mm (8.12992 in)
Net weight	1.7 kg (3.74786 lb)
Certificate of suitability	CCC / CE / EAC / KC / RCM / UL

Selection and ordering data

Description	Article No.
SINUMERIK MCP 398C machine control panel Mechanical short-stroke keys Connection PROFINET/Industrial Ethernet Width 398 mm (15.67 in)	**6FC5303-0AF25-0AA0**
SINUMERIK EM 66 expansion module Width 66 mm (2.60 in)	**6FC5303-0AF30-0AA0**
SINUMERIK EM 131 expansion module Width 131 mm (5.16 in)	**6FC5303-0AF31-0AA0**
SINUMERIK EM 187 expansion module Width 187 mm (7.36 in)	**6FC5303-0AF28-0AA0**
Accessories	
Square key cover, for labeling (1 set) 90 × ergo gray, 20 × medium gray, 20 × red, 20 × yellow, 20 × green	**6FC5248-0AF12-0AA0**
Square key cover, for labeling 90 × transparent	**6FC5248-0AF21-0AA0**
Set of key caps SINUMERIK key covers, square, for inscription	
• 500 × ergo gray (light basic)	**6FC5348-0AF00-0AA0**
• 500 × mid-gray (medium basic)	**6FC5348-0AF01-0AA0**
Emergency stop mushroom pushbutton 22 mm (0.87 in) with holder Plastic, round, red, positive latching, rotate to unlatch	**6FC5347-0AF20-1AA1**
Contact block with 2 contacts Screw terminal, 2-pole 1 NO contact + 1 NC contact	**6FC5347-0AF20-2AA1**
Spindle/rapid traverse override, electronic rotary switch 1 × 16G, T=24, cap, button, pointer, and rapid traverse and spindle dials[1]	**6FC5247-0AF12-1AA0**
Feedrate/rapid traverse override, electronic rotary switch 1 × 23G, T=32, cap, button, pointer, and rapid traverse and feedrate dials[2]	**6FC5247-0AF13-1AA0**
Cable set (1 set = 60 units) For additional machine control panel control devices Length 500 mm (19.69 in)	**6FC5247-0AA35-0AA0**
Signal cable, pre-assembled For connecting an electronic handwheel Length max. 25 m (82 ft)[3]	6FX8002-2CP00-….

For Ethernet or PROFINET ordering data, see Industrial Ethernet Switches – SCALANCE.

[1] 16G: Latching at position 16; T=24: 24 positions for 360°
[2] 23G: Latching at position 23; T=32: 32 positions for 360°
[3] For complete article number and length code, see MOTION-CONNECT connection systems.

© Siemens 2022

Overview

The SINUMERIK MCP 310C PN machine control panel with mechanical keys is designed to permit user-friendly, well-structured operation of the machine functions. It is suitable for machine-level operation of milling, turning, grinding and special machines.

In addition to PROFINET functionality, SINUMERIK MCP 310C PN has also retained its complete Industrial Ethernet functionality. The network technology can be switched using DIP switches.

All keys are designed with replaceable covers for machine-specific adaptations. The key caps can be freely inscribed using laser. Clear key covers can be used as an alternative.

The machine control panel is secured from the rear using special clamps supplied with the panel.

Design

Operator controls:

- Mechanical keys
- Operating mode and function keys:
  - 49 keys with LEDs
  - Direction keys for milling machines with rapid traverse override (key covers for direction keys for turning machines are supplied)
  - Default key assignment includes 16 freely assignable customer keys
- Feedrate control with feedrate/rapid traverse override (rotary switch with 23 positions)
- Keyswitch (four positions and three different keys)

Interfaces:

- PROFINET
- Industrial Ethernet
- 9 inputs/6 outputs for 9 control devices (additional cable set required for control devices)
- 2 handwheels

Extensions:

- 6 slots for control devices (d = 16 mm)
- 1 mounting space for emergency stop button or spindle/rapid traverse override rotary switch (d = 22 mm)

Included in the scope of delivery are the key caps (30 × ergo gray, 30 × clear, 9 × labeled) and a backing plate for the emergency stop.

Integration

The SINUMERIK MCP 310C PN machine control panel can be used for:

- SINUMERIK 840D sl

Technical specifications

Article number	6FC5303-0AF23-0AA1
Product brand name	SINUMERIK
Product short term	MCP 310C PN
Product designation	Machine control panel
Supply voltage at DC	24 V
Active power consumption maximum	21.2 W
Transmission link maximum	100 m (109.36133 yd)
Degree of protection	
• front	IP54
• rear	IP00
• Note	Key-operated switch IP54
Environmental category acc. to IEC 60721-3-3	Condensation and icing excluded. Low air temperature 0 °C (32 °F).
Relative humidity at 25 °C (77 °F), during	
• storage	5 ... 95 %
• transport	5 ... 95 %
• operation	5 ... 95 %
Ambient temperature, during	
• storage	-25 ... +55 °C (-13 ... +131 °F)
• transport	-40 ... +70 °C (-40 ... +158 °F)
• operation	
- front	0 ... 45 °C (32 ... 113 °F)
- rear	0 ... 55 °C (32 ... 131 °F)
Width	310 mm (12.20472 in)
Height	175 mm (6.88976 in)
Depth	85.2 mm (3.35433 in)
• Note	With connector for handwheel connection
Installation depth	29.1 mm (1.14567 in)
• Note	Without connector for handwheel connection
Mounting surface	
• section width	285 mm (11.22047 in)
• section height	155 mm (6.10236 in)
Net weight	1.2 kg (2.64555 lb)
Certificate of suitability	CE, cULus

© Siemens 2022

Selection and ordering data

Description	Article No.
SINUMERIK MCP 310C PN machine control panel Mechanical keys Connection PROFINET/Industrial Ethernet Width 310 mm (12.20 in)	**6FC5303-0AF23-0AA1**
Accessories	
Square key cover, for labeling (1 set) 90 × ergo gray, 20 × medium gray, 20 × red, 20 × yellow, 20 × green	**6FC5248-0AF12-0AA0**
Square key cover, for labeling 90 × transparent	**6FC5248-0AF21-0AA0**
Set of key caps SINUMERIK key covers, square, for inscription	
• 500 × ergo gray (light basic)	**6FC5348-0AF00-0AA0**
• 500 × mid-gray (medium basic)	**6FC5348-0AF01-0AA0**
Emergency stop mushroom pushbutton 22 mm (0.87 in) with holder Plastic, round, red, positive latching, rotate to unlatch	**6FC5347-0AF20-1AA1**

Description	Article No.
Accessories *(continued)*	
Contact block with 2 contacts Screw terminal, 2-pole 1 NO contact + 1 NC contact	**6FC5347-0AF20-2AA1**
Spindle/rapid traverse override, electronic rotary switch 1 × 16G, T=24, cap, button, pointer, and rapid traverse and spindle dials[1]	**6FC5247-0AF12-1AA0**
Feedrate/rapid traverse override, electronic rotary switch 1 × 23G, T=32, cap, button, pointer, and rapid traverse and feedrate dials[2]	**6FC5247-0AF13-1AA0**
Cable set (1 set = 60 units) For additional machine control panel control devices Length 500 mm (19.69 in)	**6FC5247-0AA35-0AA0**
Signal cable, pre-assembled For connecting an electronic handwheel Length max. 25 m (82 ft) [3]	6FX8002-2CP00-….

For Ethernet or PROFINET ordering data, see Industrial Ethernet Switches – SCALANCE.

[1] 16G: Latching at position 16; T=24: 24 positions for 360°
[2] 23G: Latching at position 23; T=32: 32 positions for 360°
[3] For complete article number and length code, see MOTION-CONNECT connection systems.

© Siemens 2022

Overview

The SINUMERIK MCP 310 PN machine control panel with membrane keys is designed to permit user-friendly, well-structured operation of the machine functions. It is suitable for machine-level operation of milling, turning, grinding and special machines.

Apart from PROFINET functionality, SINUMERIK MCP 310 PN also has complete Industrial Ethernet functionality. The network technology can be switched using DIP switches.

49 keys have user-inscribed slide-in strips for machine-specific adaptations.

The machine control panel is secured from the rear using special clamps supplied with the panel.

Design

Operator controls:

- Membrane keys
- Operating mode and function keys:
  - 49 keys with LEDs
  - Direction keys for milling machines with rapid traverse override
  - Default key assignment includes 16 freely assignable customer keys
- Feedrate control with feedrate/rapid traverse override (rotary switch with 23 positions)
- Keyswitch (four positions and three different keys)

Interfaces:

- PROFINET
- Industrial Ethernet
- 9 inputs/6 outputs for 9 control devices (additional cable set required for control devices)
- 16 direct keys of the OP 012/OP 015A (connecting cable length 850 mm included in scope of delivery)
- 2 handwheels in conjunction with SINUMERIK 840D sl

Extensions:

- 6 slots for control devices (d = 16 mm)
- 1 slot for emergency stop button or spindle/rapid traverse override rotary switch (d = 22 mm)

A DIN A4 sheet for laser printers for inscribing the slide-in labels is included in the scope of delivery.

Integration

The SINUMERIK MCP 310 PN machine control panel can be used for:

- SINUMERIK 840D sl

Technical specifications

Article number	6FC5303-0AF23-1AA1
Product brand name	SINUMERIK
Product short term	MCP 310 PN
Product designation	Machine control panel
Supply voltage at DC	24 V
Active power consumption maximum	21.2 W
Transmission link maximum	100 m (109.36133 yd)
Degree of protection	
• front	IP65
• rear	IP00
• Note	Key-operated switch IP54
Environmental category acc. to IEC 60721-3-3	Condensation and icing excluded. Low air temperature 0 °C (32 °F).
Relative humidity at 25 °C (77 °F), during	
• storage	5 ... 95 %
• transport	5 ... 95 %
• operation	5 ... 95 %
Ambient temperature, during	
• storage	-25 ... +55 °C (-13 ... +131 °F)
• transport	-40 ... +70 °C (-40 ... +158 °F)
• operation	
- front	0 ... 45 °C (32 ... 113 °F)
- rear	0 ... 55 °C (32 ... 131 °F)
Width	310 mm (12.20472 in)
Height	175 mm (6.88976 in)
Depth	85.2 mm (3.35433 in)
• Note	With connector for handwheel connection
Installation depth	53.9 mm (2.12205 in)
• Note	With connector for handwheel connection
Mounting surface	
• section width	285 mm (11.22047 in)
• section height	155 mm (6.10236 in)
Net weight	1.2 kg (2.64555 lb)
Certificate of suitability	CE, cULus

© Siemens 2022

Selection and ordering data

Description	Article No.
SINUMERIK MCP 310 PN machine control panel Membrane keys Connection PROFINET/ Industrial Ethernet Width 310 mm (12.20 in)	**6FC5303-0AF23-1AA1**
Accessories	
Slide-in labels for inscribing 3 A4 sheets	**6FC5248-0AF23-1AA0**
Emergency stop mushroom pushbutton 22 mm (0.87 in) with holder Plastic, round, red, positive latching, rotate to unlatch	**6FC5347-0AF20-1AA1**
Contact block with 2 contacts Screw terminal, 2-pole 1 NO contact + 1 NC contact	**6FC5347-0AF20-2AA1**
Keyswitch with key For SINUMERIK MCP 6FC5303-0AF22-1AA1 6FC5303-0AF23-1AA1	**6FC5247-0AF02-0AA0**

Description	Article No.
Accessories (continued)	
Spindle/rapid traverse override, electronic rotary switch 1 × 16G, T=24, cap, button, pointer, and rapid traverse and spindle dials[1)]	**6FC5247-0AF12-1AA0**
Feedrate/rapid traverse override, electronic rotary switch 1 × 23G, T=32, cap, button, pointer, and rapid traverse and feedrate dials[2)]	**6FC5247-0AF13-1AA0**
Cable set (1 set = 60 units) For additional machine control panel control devices Length 500 mm (19.69 in)	**6FC5247-0AA35-0AA0**
Signal cable, pre-assembled For connecting electronic handwheel Length max. 25 m (82 ft)[3)]	6FX8002-2CP00-….

For Ethernet or PROFINET ordering data, see Industrial Ethernet Switches – SCALANCE.

1) 16G: Latching at position 16; T=24: 24 positions for 360°
2) 23G: Latching at position 23; T=32: 32 positions for 360°
3) For complete article number and length code, see MOTION-CONNECT connection systems.

© Siemens 2022

Overview

The SINUMERIK MCP 483C PN machine control panel with mechanical keys is designed to permit user-friendly, well-structured operation of the machine functions. It is suitable for machine-level operation of milling, turning, grinding and special machines.

In addition to PROFINET functionality, SINUMERIK MCP 483C PN has also retained its complete Industrial Ethernet functionality. The network technology can be switched using DIP switches.

All keys are designed with replaceable key covers for machine-specific adaptations. The key covers can be freely inscribed using laser. Transparent key covers can be used as an alternative.

The machine control panel is secured from the rear using special clamps supplied with the panel.

Design

Operator controls:

- Mechanical keys
- Operating mode and function keys:
  - 50 keys with LEDs
  - Direction keys for milling machines with rapid traverse override (key covers for direction keys for turning machines are supplied)
- Spindle control with spindle/rapid traverse override (rotary switch with 16 positions)
- Feedrate control with feedrate/rapid traverse override (rotary switch with 23 positions)
- Keyswitch (four positions and three different keys)
- Emergency stop pushbutton (2 × (1 NO + 1 NC))

Interfaces:

- PROFINET
- Industrial Ethernet
- 9 inputs/6 outputs for 9 control devices (additional cable set required for control devices)
- 2 handwheels

Extensions:

- 2 slots for control devices (*d* = 16 mm)

Integration

The SINUMERIK MCP 483C PN machine control panel can be used for:

- SINUMERIK 840D sl

Technical specifications

Article number	6FC5303-0AF22-0AA1
Product brand name	SINUMERIK
Product short term	MCP 483C PN
Product designation	Machine control panel
Supply voltage at DC	24 V
Active power consumption maximum	21.2 W
Transmission link maximum	100 m (109.36133 yd)
Degree of protection	
• front	IP54
• rear	IP00
• Note	Mounting frame IP65
Environmental category acc. to IEC 60721-3-3	Condensation and icing excluded. Low air temperature 0 °C (32 °F).
Relative humidity at 25 °C (77 °F), during	
• storage	5 ... 95 %
• transport	5 ... 95 %
• operation	5 ... 95 %
Ambient temperature, during	
• storage	-25 ... +55 °C (-13 ... +131 °F)
• transport	-40 ... +70 °C (-40 ... +158 °F)
• operation	
- front	0 ... 45 °C (32 ... 113 °F)
- rear	0 ... 55 °C (32 ... 131 °F)
Width	483 mm (19.01575 in)
Height	155 mm (6.10236 in)
Depth	106.3 mm (4.18504 in)
• Note	With connector for handwheel connection
Installation depth	54.5 mm (2.14567 in)
• Note	With connector for handwheel connection
Mounting surface	
• section width	450 mm (17.71654 in)
• section height	135 mm (5.31496 in)
Net weight	2 kg (4.40925 lb)
Certificate of suitability	CE, cULus

© Siemens 2022

Selection and ordering data

Description	Article No.
SINUMERIK MCP 483C PN machine control panel Mechanical keys Connection PROFINET/ Industrial Ethernet Width 19", emergency stop pushbutton 22 mm	**6FC5303-0AF22-0AA1**
Accessories	
Square key cover, for labeling (1 set) 90 × ergo gray, 20 × medium gray, 20 × red, 20 × yellow, 20 × green	**6FC5248-0AF12-0AA0**
Square key cover, for labeling 90 × transparent	**6FC5248-0AF21-0AA0**
Set of key caps SINUMERIK key covers, square, for inscription	
• 500 × ergo gray (light basic)	**6FC5348-0AF00-0AA0**
• 500 × mid-gray (medium basic)	**6FC5348-0AF01-0AA0**
Emergency stop mushroom pushbutton 22 mm (0.87 in) with holder Plastic, round, red, positive latching, rotate to unlatch	**6FC5347-0AF20-1AA1**
Contact block with 2 contacts Screw terminal, 2-pole 1 NO contact + 1 NC contact	**6FC5347-0AF20-2AA1**
Rapid traverse dial (1 set = 20 units) for MCP 483C 16-position rotary switch	**6FC5248-0AF30-0AA0**

Description	Article No.
Accessories (continued)	
Spindle/rapid traverse override, electronic rotary switch 1 × 16G, T=24, cap, button, pointer, and rapid traverse and spindle dials[1)]	**6FC5247-0AF12-1AA0**
Feedrate/rapid traverse override, electronic rotary switch 1 × 23G, T=32, cap, button, pointer, and rapid traverse and feedrate dials[2)]	**6FC5247-0AF13-1AA0**
Cable set (1 set = 60 units) For additional machine control panel control devices Length 500 mm (19.69 in)	**6FC5247-0AA35-0AA0**

For Ethernet or PROFINET ordering data, see Industrial Ethernet Switches – SCALANCE.

[1)] 16G: Latching at position 16; T=24: 24 positions for 360°
[2)] 23G: Latching at position 23; T=32: 32 positions for 360°

© Siemens 2022

Overview

The SINUMERIK MCP 483 PN machine control panel with membrane keys is designed to permit user-friendly, well-structured operation of the machine functions. It is suitable for machine-level operation of milling, turning, grinding and special machines.

SINUMERIK MCP 483 PN has, apart from PROFINET functionality, also complete Industrial Ethernet functionality. The network technology can be switched using DIP switches.

46 keys and both control device slots are equipped with user-inscribed slide-in labels for adapting to specific machines.

The machine control panel is secured from the rear using special clamps supplied with the panel.

Design

Operator controls:

- Membrane keys
- Operating mode and function keys:
  - 50 keys with LEDs
  - Direction keys for milling machines with rapid traverse override
  - Default key assignment includes 17 freely assignable customer keys
- Spindle control with spindle/rapid traverse override (rotary switch with 16 positions)
- Feedrate control with feedrate/rapid traverse override (rotary switch with 23 positions)
- Keyswitch (four positions and three different keys)
- Emergency stop button (2 × (1 NO + 1 NC))

Interfaces:

- PROFINET
- Industrial Ethernet
- 9 inputs/6 outputs for 9 control devices (additional cable set required for control devices)
- 16 direct keys of the OP 012/OP 015A (connecting cable length 850 mm included in scope of delivery)
- 2 handwheels

Extensions:

- 2 slots for control devices (*d* = 16 mm)

A DIN A4 sheet for laser printers for inscribing the slide-in labels is included in the scope of delivery.

Integration

The SINUMERIK MCP 483 PN machine control panel can be used for:

- SINUMERIK 840D sl

Technical specifications

Article number	6FC5303-0AF22-1AA1
Product brand name	SINUMERIK
Product short term	MCP 483 PN
Product designation	Machine control panel
Supply voltage at DC	24 V
Active power consumption maximum	21.2 W
Transmission link maximum	100 m (109.36133 yd)
Degree of protection	
• front	IP54
• rear	IP00
• Note	Mounting frame IP65
Environmental category acc. to IEC 60721-3-3	Condensation and icing excluded. Low air temperature 0 °C (32 °F).
Relative humidity at 25 °C (77 °F), during	
• storage	5 ... 95 %
• transport	5 ... 95 %
• operation	5 ... 95 %
Ambient temperature, during	
• storage	-25 ... +55 °C (-13 ... +131 °F)
• transport	-40 ... +70 °C (-40 ... +158 °F)
• operation	
- front	0 ... 45 °C (32 ... 113 °F)
- rear	0 ... 55 °C (32 ... 131 °F)
Width	483 mm (19.01575 in)
Height	155 mm (6.10236 in)
Depth	106.7 mm (4.20079 in)
• Note	With connector for handwheel connection
Installation depth	53.9 mm (2.12205 in)
• Note	With connector for handwheel connection
Mounting surface	
• section width	450 mm (17.71654 in)
• section height	135 mm (5.31496 in)
Net weight	1.6 kg (3.5274 lb)
Certificate of suitability	CE, cULus

© Siemens 2022

Selection and ordering data

Description	Article No.
SINUMERIK MCP 483 PN machine control panel Membrane keys Connection PROFINET/ Industrial Ethernet Width 19", emergency stop button 22 mm	**6FC5303-0AF22-1AA1**
Accessories	
Slide-in labels for inscribing 3 A4 sheets	**6FC5248-0AF22-1AA1**
Emergency stop mushroom pushbutton 22 mm (0.87 in) with holder Plastic, round, red, positive latching, rotate to unlatch	**6FC5347-0AF20-1AA1**
Contact block with 2 contacts Screw terminal, 2-pole 1 NO contact + 1 NC contact	**6FC5347-0AF20-2AA1**
Keyswitch with key For SINUMERIK MCP 6FC5303-0AF22-1AA1 6FC5303-0AF23-1AA1	**6FC5247-0AF02-0AA0**

Description	Article No.
Accessories *(continued)*	
Spindle/rapid traverse override, electronic rotary switch 1 × 16G, T=24, cap, button, pointer, and rapid traverse and spindle dials[1]	**6FC5247-0AF12-1AA0**
Feedrate/rapid traverse override, electronic rotary switch 1 × 23G, T=32, cap, button, pointer, and rapid traverse and feedrate dials[2]	**6FC5247-0AF13-1AA0**
Cable set (1 set = 60 units) For additional machine control panel control devices Length 500 mm (19.69 in)	**6FC5247-0AA35-0AA0**
Signal cable, pre-assembled For connecting an electronic handwheel Length max. 25 m (82 ft) [3]	6FX8002-2CP00-....

For Ethernet or PROFINET ordering data, see Industrial Ethernet Switches – SCALANCE.

[1] 16G: Latching at position 16; T=24: 24 positions for 360°
[2] 23G: Latching at position 23; T=32: 32 positions for 360°
[3] For complete article number and length code, see MOTION-CONNECT connection systems.

© Siemens 2022

Overview

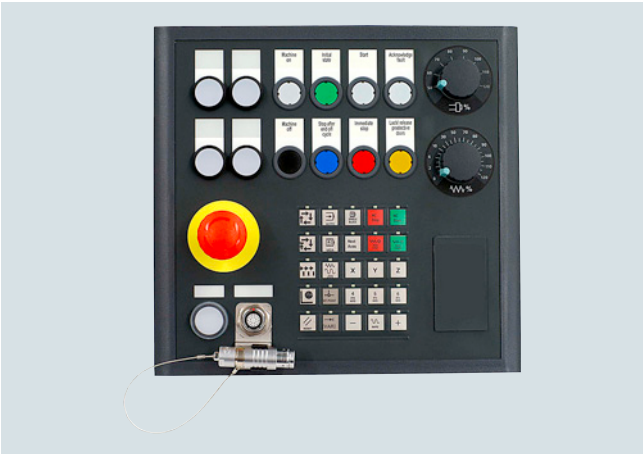

The SINUMERIK MPP 310 IEH Machine Push Button Panel for Industrial Ethernet with a port for a handheld terminal has 8 large, long-stroke keys for easy machine operation and a membrane keyboard for powerful setup functions. The SINUMERIK MPP 310 IEH is ideally suited as a supplement to the SINUMERIK OP 08T operator panel front.

The SINUMERIK MPP 310 IEH is suitable for the use with various machines, wherever maximum ergonomics and operation flexibility are required.

The Machine Push Button Panel is secured from the rear using special clamps supplied with the panel.

Design

- Feedrate override
- Spindle override
- 8 customer keys (long-stroke keys, Schlegel) with LEDs, slide-in labels
- Blank cover for retrofit of Electronic Key System EKS (Euchner)
- 25 function keys with LEDs (membrane keys), slide-in labels
- With port for SINUMERIK HT 2/HT 8 handheld terminals
- Emergency stop override key
- Emergency stop button
- 4 extension keys (SIRIUS ACT 3SU1) with LEDs, slide-in labels

A DIN A4 sheet for laser printers for inscribing the slide-in labels is included in the scope of delivery.

Integration

The SINUMERIK MPP 310 IEH Machine Push Button Panel can be used for:

- SINUMERIK 840D sl

Technical specifications

Article number	6FC5303-1AF20-8AA1
Product brand name	SINUMERIK
Product short term	MPP 310 IEH
Product designation	Machine Push Button Panel
Product feature	With port for SINUMERIK HT 2/HT 8 handheld terminals
Supply voltage at DC	24 V
Active power consumption maximum	25 W
Degree of protection	
• front	IP54
• rear	IP00
Environmental category acc. to IEC 60721-3-3	Condensation and icing excluded. Low air temperature 0 °C (32 °F).
Relative humidity at 25 °C (77 °F), during	
• storage	5 ... 95 %
• transport	5 ... 95 %
• operation	5 ... 95 %
Ambient temperature, during	
• storage	-25 ... +55 °C (-13 ... +131 °F)
• transport	-40 ... +70 °C (-40 ... +158 °F)
• operation	
- front	0 ... 45 °C (32 ... 113 °F)
- rear	0 ... 55 °C (32 ... 131 °F)
Width	310 mm (12.20472 in)
Height	295 mm (11.61417 in)
Depth	200 mm (7.87402 in)
• Note	With connector for handwheel connection
Installation depth	140 mm (5.51181 in)
• Note	Without connector for handwheel Connection 105 mm (4.13 in)
Mounting surface	
• section width	278.5 mm (10.96457 in)
• section height	276.5 mm (10.88583 in)
Net weight	3 kg (6.61387 lb)
Certificate of suitability	CE, UL

Selection and ordering data

Description	Article No.
SINUMERIK MPP 310 IEH Machine Push Button Panel With port for SINUMERIK HT 2/HT 8	**6FC5303-1AF20-8AA1**

For Ethernet or PROFINET ordering data, see Industrial Ethernet Switches – SCALANCE.

© Siemens 2022

Overview

The SINUMERIK MPP 483 IE/MPP 483 IEH Machine Push Button Panels for Industrial Ethernet are available as an expansion to SINUMERIK and PLC-controlled machines. Its modular design and ergonomically arranged control elements facilitate and simplify operation.

The SINUMERIK MPPs provide large, long-stroke keys for easy machine operation as well as a membrane keyboard for powerful set-up functions.

Tuned to the requirements of the powertrain sector, the SINUMERIK MPP 483 IE/MPP 483 IEH are suitable for use with many different types of machine wherever ergonomics and operating flexibility are priorities.

The Machine Push Button Panel is secured from the rear using special clamps supplied with the panel.

Design

The basic versions of the SINUMERIK Machine Push Button Panels MPP 483 IE/MPP 483 IEH provide:

- Emergency stop button (4-wire), latching, tamper-proof
- 8 equipped illuminated pushbuttons for control elements (d = 22.5 mm)
- 2 blanking plugs for easy retrofitting
- 25 function keys with inscribed standard slide-in labels (membrane keys)
- Keyswitches with 2 positions for bridging the emergency stop circuit and for authorization of mode selection
- Direct key connection for SINUMERIK OP 012/OP 015A direct keys, incl. ribbon cable
- Feedrate override
- Interfaces for 2 handwheels when connected via Industrial Ethernet (function depends on CNC software)
- Communication via Industrial Ethernet
- 1 port for SINUMERIK HT 2/HT 8 handheld terminals (only with SINUMERIK MPP 483 IEH)

A DIN A4 sheet for laser printers for inscribing the slide-in labels is included in the scope of delivery.

Extensions:

- 2 spare slots (d = 22.5 mm)
- Spindle override
- Individual adaptation of colors and labels on membrane and long-stroke keys. As a general rule, all keys can be freely assigned and inscribed.

Special versions:

- SINUMERIK MPP 483 IE-S../MPP 483 IEH-S..:
  These special versions with are available with virtually unlimited configuration options combining various operator controls including the EKS electronic key system (from Euchner).
- SINUMERIK MPP 483 IE-L/MPP 483 IEH-L:
  This special Large version is characterized by a higher masking frame (244 mm) that offers additional mounting space as an integrated expansion panel.

Integration

SINUMERIK Machine Push Button Panels
MPP 483 IE/MPP 483 IEH can be used for:

- SINUMERIK 840D sl

© Siemens 2022

Technical specifications

Article number		6FC5303-1AF10-0AA0	6FC5303-1AF10-8AA0
Product brand name		SINUMERIK	SINUMERIK
Product short term		MPP 483 IE	MPP 483 IEH
Product designation		Machine Push Button Panel	Machine Push Button Panel
Product feature		-	With port for SINUMERIK HT 2/HT 8 handheld terminals
Supply voltage at DC	V	24	24
Active power consumption / maximum	W	25	35
Degree of protection			
• front		IP54	IP54
• rear		IP10A	IP10A
Environmental category acc. to IEC 60721-3-3		Condensation and icing excluded. Low air temperature 0 °C (32 °F).	Condensation and icing excluded. Low air temperature 0 °C (32 °F).
Relative humidity at 25 °C (77 °F), during			
• storage	%	5 ... 95	5 ... 95
• transport	%	5 ... 95	5 ... 95
• operation	%	5 ... 95	5 ... 95
Ambient temperature, during			
• storage	°C (°F)	-25 ... +55 (-13 ... +131)	-25 ... +55 (-13 ... +131)
• transport	°C (°F)	-40 ... +70 (-40 ... +158)	-40 ... +70 (-40 ... +158)
• operation			
- front	°C (°F)	0 ... 45 (32 ... 113)	0 ... 45 (32 ... 113)
- rear	°C (°F)	0 ... 55 (32 ... 131)	0 ... 55 (32 ... 131)
Width	mm (in)	483 (19.01575)	483 (19.01575)
Height	mm (in)	155 (6.10236)	155 (6.10236)
Depth	mm (in)	165 (6.49606)	200 (7.87402)
• Note		-	With connector for handwheel connection
Installation depth	mm (in)	105 (4.13386)	140 (5.51181)
• Note		-	Without connector for handwheel Connection 105 mm (4.13 in)
Mounting surface			
• section width	mm (in)	451 (17.75591)	451 (17.75591)
• section height	mm (in)	137.6 (5.41732)	137.6 (5.41732)
Net weight	kg (lb)	3 (6.61387)	3 (6.61387)
Certificate of suitability		CE, UL	CE, UL

Selection and ordering data

Description	Article No.
SINUMERIK MPP 483 IE Machine Push Button Panel	**6FC5303-1AF10-0AA0**
SINUMERIK MPP 483 IEH Machine Push Button Panel With port for SINUMERI HT 2/HT 8	**6FC5303-1AF10-8AA0**

For Ethernet or PROFINET ordering data, see Industrial Ethernet Switches – SCALANCE.

© Siemens 2022

Overview

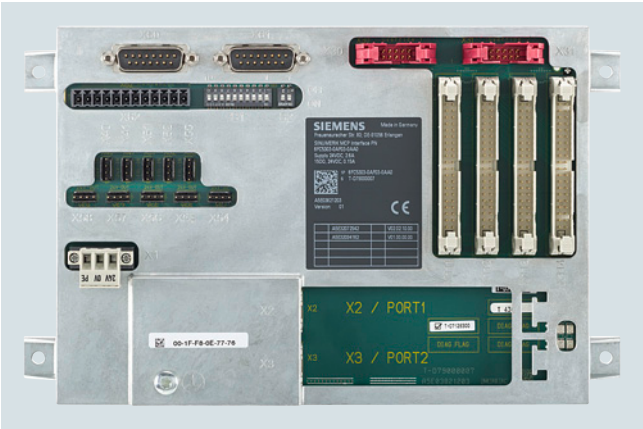

The SINUMERIK MCP Interface PN enables customer-specific machine control panels to be connected via PROFINET.

On the SINUMERIK MCP Interface PN, digital inputs, outputs, connections for rotary override switches and handwheels are provided as well as two Industrial Ethernet interfaces for communication.

Design

You can connect the following operator controls to the SINUMERIK MCP Interface PN:

- 80 single keys
- 64 LEDs
- 2 handwheels
- 2 rotary override switches

The following inputs/outputs are also available:

- 9 digital inputs (5 V)
- 6 digital inputs (24 V)
- 15 digital outputs (24 V each 0.15 A)

Integration

The SINUMERIK MCP Interface PN can be used for:

- SINUMERIK 840D sl

Technical specifications

Article number	6FC5303-0AF03-0AA0
Product brand name	SINUMERIK
Product designation	MCP Interface PN
Supply voltage at DC	24 V
Active power consumption maximum	62.4 W
• Note	All connectable operator controls, own requirement 2.4 W
Degree of protection	IP00
Environmental category acc. to IEC 60721-3-3	Condensation and icing excluded. Low air temperature 0 °C (32 °F).
Relative humidity at 25 °C (77 °F), during	
• storage	5 ... 95 %
• transport	5 ... 95 %
• operation	5 ... 95 %
Ambient temperature, during	
• storage	-25 ... +55 °C (-13 ... +131 °F)
• transport	-40 ... +70 °C (-40 ... +158 °F)
• operation	
- front	0 ... 45 °C (32 ... 113 °F)
- rear	0 ... 55 °C (32 ... 131 °F)
Width	242 mm (9.52756 in)
Height	152 mm (5.98425 in)
Depth	36 mm (1.41732 in)
Net weight	0.557 kg (1.22798 lb)
Certificate of suitability	CE, cULus, EAC

Selection and ordering data

Description	Article No.
SINUMERIK MCP Interface PN For connection of customer-specific machine control panels over PROFINET	**6FC5303-0AF03-0AA0**
Accessories	
Feedrate/rapid traverse override electronic rotary switch 1 × 23G, T=32, cap, button, pointer, and rapid traverse and feedrate dials[1]	**6FC5247-0AF13-1AA0**
Spindle/rapid traverse override electronic rotary switch 1 × 16G, T=24, cap, button, pointer, and rapid traverse and spindle dials[2]	**6FC5247-0AF12-1AA00**
Cable set (1 set = 60 units) For additional control devices Length 500 mm (19.69 in)	**6FC5247-0AA35-0AA0**

[1] 23G: Latching at position 23; T=32: 32 positions for 360°
[2] 16G: Latching at position 16; T=24: 24 positions for 360°

© Siemens 2022

Overview

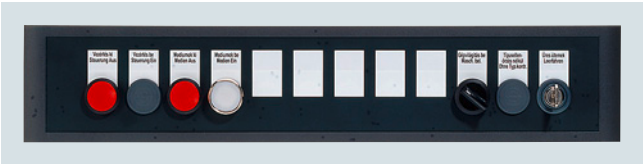

The SINUMERIK expansion panel is used to install up to 12 additional control elements, e.g. pushbuttons, indicator lights, and keyswitches, as an expansion to a Machine Push Button Panel or a machine control panel, or to expand the free inputs/outputs of a machine control panel. The expansion panel has rounded edges in conformance with the new design of the SINUMERIK operator panels.

The expansion panel is secured from the rear using special clamps supplied with the panel.

Design

The expansion panel is 19" wide, and can accommodate up to twelve 22 mm control elements of any type.

The 12 slots are pre-punched and can be easily broken out as required. Panels with customized complements can also be provided on request. Inscriptions are made on 2 slide-in labeling strips which are inserted from the rear.

For add-on control elements, see also the special versions of SINUMERIK MPP 483.

Technical specifications

Article number	6FC5247-0AA43-1AA0
Product brand name	SINUMERIK
Product designation	Expansion panel for MCP 483/MPP 483
Supply voltage at DC	24 V
Environmental category acc. to IEC 60721-3-3	Condensation and icing excluded. Low air temperature 0 °C (32 °F).
Relative humidity at 25 °C (77 °F), during	
• storage	5 ... 95 %
• transport	5 ... 95 %
• operation	5 ... 95 %
Ambient temperature, during	
• storage	-25 ... +55 °C (-13 ... +131 °F)
• transport	-40 ... +70 °C (-40 ... +158 °F)
• operation	
- front	0 ... 45 °C (32 ... 113 °F)
- rear	0 ... 55 °C (32 ... 131 °F)
Width	483 mm (19.01575 in)
Height	95 mm (3.74016 in)
Depth	31 mm (1.22047 in)
Mounting surface	
• section width	451 mm (17.75591 in)
• section height	77.6 mm (3.05512 in)
Net weight	0.5 kg (1.10231 lb)

Selection and ordering data

Description	Article No.
SINUMERIK expansion panel for MCP 483/MPP 483 Not equipped 12 slots for 22 mm (0.87 in) operator controls Width 19"	**6FC5247-0AA43-1AA0**

© Siemens 2022

Overview

Innovative technology, simple installation

SIRIUS ACT 3SU1 is our modular, tried-and-tested complete range of pushbuttons and indicator lights in round design. Whether plastic or metal - we can supply the ideal solution for any application. Your benefit: SIRIUS ACT 3SU1 products are quick and easy to install - and are dependable in operation.

Benefits

- Emergency stop with reliable direct connection to AS-Interface
- SIRIUS ACT 3SU1 control devices in plastic and metal for the world market
- Rugged metal control devices: IP67 degree of protection/NEMA 4
- Cost-effective and uniquely identifiable with integral super-bright LED
- Various connection possibilities:
  screw-type, solder pin or spring-loaded terminals

More information

You can find further information on the internet at:

www.siemens.com/sirius-act
www.siemens.com/industrymall

Overview

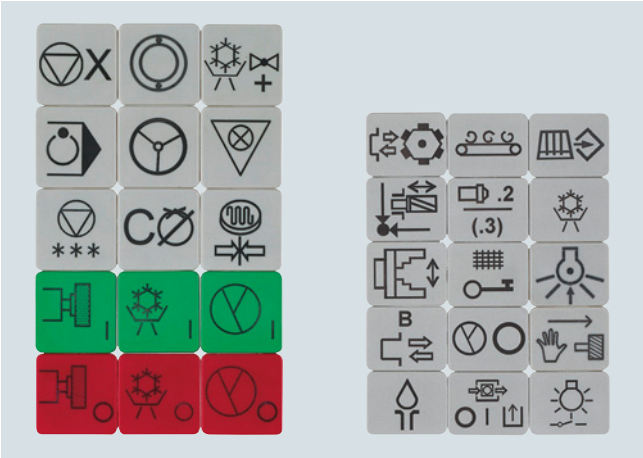

High-quality, individual inscription of the mechanical keys on SINUMERIK machine control panels with special symbols required by the customer is easy using lasers.

Laser inscription is possible on all materials in principle and can therefore be used for permanent and reliable identification, also for special keys in the case of SINUMERIK machine control panels.

The quality of laser inscribed products is significantly higher than conventional inscription techniques.

Benefits

- Maximum precision
- Long service life
- Professional key design enhances the ergonomics and appearance of the machine tool

More information

For professional advice and solutions regarding laser-inscribed, mechanical key caps/key symbols for the SINUMERIK machine control panels, please contact:

LASERline Teschauer GmbH

Max-Planck-Straße 22b
09114 CHEMNITZ
GERMANY

Tel.: +49 371 330 10 57

Email: laserline@teschauer.de
Internet: www.teschauer.de

CoReKu GmbH & Co. KG

Im Grünen Winkel 3A
09337 CALLENBERG
GERMANY

Tel.: +49 37608 128-0

Email: kontakt@coreku.de
Internet: www.coreku.de

© Siemens 2022

Overview

The SINUMERIK KB 310C full CNC keyboard permits user-friendly and convenient input of programs and text with short-stroke keys.

The keyboard is secured from the rear using special clamps included in the scope of supply.

Design

Operator controls (fixed layout):

- Standard/US QWERTY layout
- 75 mechanical short-stroke keys
- Alpha block with special characters
- Numeric block with special characters
- Cursor key group
- CNC function keys with hotkeys for fast selection of the control area

Interface:

- 1 × USB 1.1 type B connection to a USB hub with own power supply (5 V/500 mA)

Integration

The SINUMERIK KB 310C full CNC keyboard can be used for:

- SINUMERIK 840D sl

Technical specifications

Article number	6FC5203-0AF21-0AA1
Product brand name	SINUMERIK
Product short term	KB 310C
Product designation	Full CNC keyboard
Supply voltage at DC	5.25 V
Active power consumption typical	0.4 W
Transmission link maximum	3 m (9.84252 ft)
Degree of protection	
• front	IP54
• rear	IP00
Environmental category acc. to IEC 60721-3-3	Condensation and icing excluded. Low air temperature 0 °C (32 °F).
Relative humidity at 25 °C (77 °F), during	
• storage	5 ... 95 %
• transport	5 ... 95 %
• operation	5 ... 95 %
Ambient temperature, during	
• storage	-25 ... +55 °C (-13 ... +131 °F)
• transport	-40 ... +70 °C (-40 ... +158 °F)
• operation	
- front	0 ... 45 °C (32 ... 113 °F)
- rear	0 ... 55 °C (32 ... 131 °F)
Width	310 mm (12.20472 in)
Height	175 mm (6.88976 in)
Depth	31 mm (1.22047 in)
Mounting surface	
• section width	285 mm (11.22047 in)
• section height	155 mm (6.10236 in)
Net weight	0.9 kg (1.98416 lb)
Certificate of suitability	CE

Selection and ordering data

Description	Article No.
SINUMERIK KB 310C full CNC keyboard Mechanical short-stroke keys Connection USB 1.1 Type B Width 310 mm (12.2 in) incl. connecting cable Length 1.5 m (4.92 ft)	**6FC5203-0AF21-0AA1**

© Siemens 2022

Overview

The SINUMERIK KB 483C full CNC keyboard permits user-friendly and convenient input of programs and text with short-stroke keys.

The keyboard is secured from the rear using special clamps included in the scope of supply.

Design

Operator controls (fixed layout):

- Standard/US QWERTY layout
- 78 mechanical short-stroke keys
- Alpha block with special characters
- Numeric block with special characters
- Cursor key group
- CNC function keys with hotkeys for fast selection of the control area

Interface:

- 1 × USB 1.1 type B connection to a USB hub with own power supply (5 V/500 mA)

Integration

The SINUMERIK KB 483C full CNC keyboard can be used for:

- SINUMERIK 840D sl

Technical specifications

Article number	6FC5203-0AF20-0AA1
Product brand name	SINUMERIK
Product short term	KB 483C
Product designation	Full CNC keyboard
Supply voltage at DC	5.25 V
Active power consumption typical	0.4 W
Transmission link maximum	3 m (9.84252 ft)
Degree of protection	
• front	IP54
• rear	IP00
Environmental category acc. to IEC 60721-3-3	Condensation and icing excluded. Low air temperature 0 °C (32 °F).
Relative humidity at 25 °C (77 °F), during	
• storage	5 ... 95 %
• transport	5 ... 95 %
• operation	5 ... 95 %
Ambient temperature, during	
• storage	-25 ... +55 °C (-13 ... +131 °F)
• transport	-40 ... +70 °C (-40 ... +158 °F)
• operation	
- front	0 ... 45 °C (32 ... 113 °F)
- rear	0 ... 55 °C (32 ... 131 °F)
Width	483 mm (19.01575 in)
Height	133 mm (5.23622 in)
Depth	31 mm (1.22047 in)
Mounting surface	
• section width	450 mm (17.71654 in)
• section height	112.5 mm (4.42913 in)
Net weight	1.3 kg (2.86601 lb)
Certificate of suitability	CE

Selection and ordering data

Description	Article No.
SINUMERIK KB 483C full CNC keyboard Mechanical short-stroke keys Connection USB 1.1 type B Width 19" incl. connecting cable Length 1.5 m (4.92 ft)	**6FC5203-0AF20-0AA1**

© Siemens 2022

RAWE Electronic GmbH – Full CNC QWERTY 483 keyboard

Overview

The full CNC QWERTY 483 membrane keyboard supplied by RAWE Electronic GmbH in Siemens design permits a user-friendly input of programs and text.

The full CNC keyboard is secured from the rear using special clamps included in the scope of supply.

Design

Operator controls:

- Standard/US QWERTY layout
- Membrane keyboard with 78 keys
- Alpha block with special characters
- Numeric block with special characters
- Cursor block
- CNC function keys with hotkeys for fast selection of the control area

Interface:

- USB 1.1

Integration

The full CNC QWERTY 483 keyboard from RAWE Electronic GmbH can be used for:

- SINUMERIK 840D sl

Technical specifications

Product designation	RAWE Electronic GmbH Full CNC QWERTY 483 membrane keyboard
Supply voltage at DC	5.25 V
Active power consumption, maximum	0.4 W
Degree of protection	
• front	IP65
• rear	IP00
Environmental category acc. to IEC 60721-3-3	Condensation and icing excluded. Low air temperature 0 °C (32 °F)
Ambient temperature, during	
• storage	-25 ... +55 °C (-13 ... +131 °F)
• transport	-40 ... +70 °C (-40 ... +158 °F)
• operation	
- front	0 ... 45 °C (32 ... 113 °F)
- rear	0 ... 55 °C (32 ... 131 °F)
Width	483 mm (19.02 in)
Height	133 mm (5.24 in)
Depth	31 mm (1.22 in)
Mounting surface	
• section width	451 mm (17.76 in)
• section height	115.1 mm (4.53 in)
Net weight	1.3 kg (2.87 lb)
Certificate of suitability	CE

More information

RAWE Electronic GmbH is known for developing innovative, customized operating systems. We are experts in solving human-machine communication problems. Are you looking for solutions? We can help!

RAWE Electronic GmbH

Bregenzer Str. 43
88171 WEILER IM ALLGÄU
GERMANY

Tel.: +49 8387 398-0

Email: info@rawe.de
Internet: www.rawe.de

© Siemens 2022

Overview

The CompactFlash card is used to store user data.

Integration

The CompactFlash Card is suitable for:

- SINUMERIK 828D
  Additional memory for user data
- SINUMERIK 840D sl
  Additional memory for user data in the SINUMERIK PCU

Selection and ordering data

Description	Article No.
SINUMERIK CompactFlash card	
Empty memory card	
• 2 GB	**6FC5313-5AG00-0AA2**
• 8 GB	**6FC5313-6AG00-0AA0**

Technical specifications

Article number		6FC5313-5AG00-0AA2	6FC5313-6AG00-0AA0
Product brand name		SINUMERIK	SINUMERIK
Product designation		CompactFlash card	CompactFlash card
Type of memory card		CompactFlash card	CompactFlash card
Storage capacity of memory card	Gbyte	2	8
Supply voltage at DC	V	5.5	5.5
Degree of protection		IP20	IP20
Environmental category acc. to IEC 60721-3-3		Condensation and icing excluded. Low air temperature 0 °C (32 °F).	Condensation and icing excluded. Low air temperature 0 °C (32 °F).
Relative humidity at 25 °C (77 °F), during			
• storage	%	5 ... 95	5 ... 95
• transport	%	5 ... 95	5 ... 95
• operation	%	10 ... 80	10 ... 80
Ambient temperature, during			
• storage	°C (°F)	-40 ... +100 (-40 ... +212)	-40 ... +100 (-40 ... +212)
• transport	°C (°F)	-40 ... +100 (-40 ... +212)	-40 ... +100 (-40 ... +212)
• operation	°C (°F)	0 ... 85 (32 ... 185)	0 ... 85 (32 ... 185)
Width	mm (in)	43 (1.69291)	43 (1.69291)
Height	mm (in)	3 (0.11811)	3 (0.11811)
Depth	mm (in)	37 (1.45669)	37 (1.45669)
Net weight	g (oz)	12 (0.42329)	12 (0.42329)
Certificate of suitability		CE, cULus	CE, cULus

© Siemens 2022

Overview

The SIMATIC USB flash drive is suitable for industrial applications and optimized for requirements in industrial environments. Special formatting and write logarithms ensure fast read/write cycles and promote a long service life of the memory cells.

Application

The SIMATIC USB flash drive is the fastest and easiest way to save and exchange data, e.g. recipes, configuration data and user data. It can also be used as a boot medium, e.g. for SIMATIC IPC BIOS Manager, SIMATIC PC Image Creator or SINUMERIK PCU.

Integration

The SIMATIC USB flash drive is suitable for:

- SINUMERIK TCU 30.3
- SINUMERIK OP 08T/OP 015 black operator panel fronts
- SINUMERIK PCU (SIMATIC IPC4x7E)

Technical specifications

Article number	6AV6881-0AS42-0AA1
Product brand name	SIMATIC
Product type designation	USB flash drive (without software)
Connection type	
• USB	Yes
• Number of USB interfaces,	1, USB 3.0 type A
Write protection switch	No
Memory size	32 Gbyte
Relative humidity	
• Operation, max.	85 %
• Condensation permissible	No
Ambient temperature during storage/transportation	-40 °C ... +70 °C (-40 °F ... +158 °F)
Ambient temperature during operation	0 °C ... 50 °C (32 °F ... 122 °F)
Dimensions	
• Width	16.7 mm (0.65748 in)
• Height	59.1 mm (2.32677 in)
• Thickness	7 mm (0.27559 in)
Weights	
• Weight without packaging	12 g (0.026 lb)
Standards, approvals, certificates	
• CE mark	Yes

Selection and ordering data

Description	Article No.
SIMATIC USB flash drive 32 GB Connection USB 3.0 Type A SIMATIC IPC BIOS Manager V3.3 Windows CE preinstalled	**6AV6881-0AS42-0AA1**

© Siemens 2022

Overview

SCALANCE X is the product group of industrial switches from SIMATIC NET for Industrial Ethernet. Switches are active network components that specifically distribute data to the relevant addressees.

Application

SCALANCE XB005

- The unmanaged Industrial Ethernet Switch SCALANCE XB005 is optimized for configuring Industrial Ethernet networks with 10/100 Mbps in line and star topologies
- Enclosure for space-saving installation in control cabinets or boxes on a standard rail

SCALANCE X005/XC108

- For configuring Industrial Ethernet networks in line and star topologies
- The 5/8 RJ45 sockets are industry-compatible and feature additional retaining collars for connection to the IE FC RJ45 plug 180

SCALANCE XC208/X208PRO

- For configuring Industrial Ethernet networks in line, star or ring topologies (8 electrical ports):
  - SCALANCE XC208 for installation in the control cabinet
  - SCALANCE X208PRO, specially for use outside the control cabinet
- The 8 RJ45 sockets of the SCALANCE XC208 are industry-compatible and feature additional securing collars for connection to the IE FC RJ45 plug 180
- The 8 PROFINET-compatible M12 sockets of the SCALANCE X208PRO are designed with IP65 degree of protection for connection to the IE M12 plug PRO or the pre-assembled IE M12 connecting cable
- The SCALANCE X208PRO can be installed on a DIN rail/S7-300 rail or as a compact flat or upright model directly on the installation or machine.
- Status information can be read in any mounting position thanks to the inclined row of LEDs.
- Power can also be supplied to the SCALANCE X208PRO from outside the control cabinet from the PS791-1PRO power supply module at 230 V AC.

Selection and ordering data

Description	Article No.
Industrial Ethernet switch SCALANCE XB005 unmanaged With 5 × 10/100 Mbps RJ45 ports for configuring small star and line topologies IP20 degree of protection	**6GK5005-0BA00-1AB2**
Industrial Ethernet switch SCALANCE X005 unmanaged With 5 × 10/100 Mbps RJ45 ports for configuring small star and line topologies IP30 degree of protection	**6GK5005-0BA10-1AA3**
Industrial Ethernet switch SCALANCE XC108 unmanaged With 8 × 10/100 Mbps RJ45 ports for configuring star and line topologies IP20 degree of protection	**6GK5108-0BA00-2AC2**
Industrial Ethernet switch SCALANCE XC208 managed With 8 × 10/100 Mbps RJ45 ports for configuring line, star and ring topologies IP20 degree of protection	**6GK5208-0BA00-2AC2**
Industrial Ethernet switch SCALANCE X208PRO managed With 8 × 10/100 Mbps RJ45 ports for configuring line, star and ring topologies IP65/IP67 degree of protection incl. 8 × RJ45 and 3 × M12 dust protection caps	**6GK5208-0HA10-2AA6**
Ethernet connection technology	
IE FC RJ45 plug 180 RJ plug connector for Industrial Ethernet with robust metal casing and integrated insulation displacement contacts; with 180° outgoing cable	**6GK1901-1BB10-2AA0**
IE FC standard cable GP 2 x 2 (Type A) 4-core, shielded TP installation cable for connection to IE FC Outlet RJ45/ IE FC RJ45 plug; PROFINET-compatible; with UL approval; sold by the meter; max. length 1000 m (3281 ft), minimum order quantity 20 m (65.62 ft)	**6XV1840-2AH10**
IE FC trailing cable GP 2 × 2 (type C) 4-core, shielded TP installation cable for connection to IE FC outlet RJ45/ IE FC RJ45 plug 180/90 for use in trailing cables; PROFINET-compatible; without UL approval; sold by the meter; max. quantity 1000 m (3281 ft), minimum order 20 m (65.62 ft)	**6XV1840-3AH10**

More information

Further information on the SIMATIC NET components, such as the Industrial Ethernet SCALANCE Electrical Lean Switches and the Industrial Ethernet FC TP Standard/Trailing Cable, can be found in the IK PI Catalog or Siemens Industry Mall.

www.siemens.com/industrymall

© Siemens 2022

Technical specifications

Article number		6GK5005-0BA00-1AB2	6GK5005-0BA10-1AA3	6GK5108-0BA00-2AC2	6GK5208-0BA00-2AC2	6GK5208-0HA10-2AA6
Product type designation		XB005	X005	XC108	XC208	X208PRO
Transfer rate						
• 1	Mbit/s	10	10	10	10	10
• 2	Mbit/s	100	100	100	100	100
Number of electrical connections						
• for signaling contact		-	-	1	1	1
• for network components or terminal equipment		5	5	8	8	8
• for redundant voltage supply		-	-	1	1	1
• for power supply		1	1	1	1	1
• for signaling contact		-	-	1	1	1
Type of electrical connection						
• for signaling contact		-	-	2-pole terminal block	2-pole terminal block	5-pin M12 socket (b-coded)
• for network components or terminal equipment		RJ45 port	RJ45 port	RJ45 port	-	M12 port, 4-pin, D-coded
• for power supply		3-pole terminal block	2-pole terminal block	4-pole terminal block	4-pole terminal block	4-pin M12 interface (A-coded)
Design of the removable storage C-PLUG		-	-	-	Yes	Yes
Type of voltage of the supply voltage		AC/DC	DC	DC	DC	DC
Supply voltage						
• external	V	24	24	24	24	24
• external	V	19.2 ... 28.8	18 ... 32	9.6 ... 31.2	9.6 ... 31.2	18 ... 32
Consumed current maximum	A	0.07	0.08	-	0.35	0.185
Power loss [W] at DC at 24 V	W	1.68	2	3	4.2	4.4
Protection class IP		IP20	IP30	IP20	IP20	IP65/67
Ambient temperature						
• during storage	°C (°F)	-40 ... +80 (-40 ... +176)	-40 ... +80 (-40 ... +176)	-40 ... +85 (-40 ... +185)	-40 ... +85 (-40 ... +185)	-40 ... +70 (-40 ... +158)
• during transport	°C (°F)	-40 ... +80 (-40 ... +176)	-40 ... +80 (-40 ... +176)	-40 ... +85 (-40 ... +185)	-40 ... +85 (-40 ... +185)	-40 ... +70 (-40 ... +158)
• during operation	°C (°F)	-10 ... +60 (14 ... +140)	-40 ... +75 (-40 ... +167)	-40 ... +70 (-40 ... +158)	-40 ... +70 (-40 ... +158)	-40 ... +70 (-40 ... +158)
Width	mm (in)	45 (1.77165)	40 (1.5748)	60 (2.36221)	60 (2.36221)	90 (3.54331)
Height	mm (in)	100 (3.93701)	125 (4.92126)	147 (5.7874)	147 (5.7874)	125 (4.92126)
Depth	mm (in)	87 (3.4252)	124 (4.88189)	125 (4.92126)	125 (4.92126)	124 (4.88189)
Net weight	kg (lb)	0.165 (0.36376)	0.55 (1.21254)	0.85 (1.87393)	0.52 (1.1464)	1 (2.20462)
Certificate of suitability		EN 61000-6-2, EN 61000-6-4	EN 61000-6-2, EN 61000-6-4	EN 61000-6-2, EN 61000-6-4	-	EN 61000-6-2, EN 61000-6-4
• CE marking		Yes	Yes	Yes	Yes	Yes
• C-Tick		Yes	Yes	Yes	-	Yes
• KC approval		Yes	Yes	Yes	-	Yes
• E1 approval		-	No	Yes	-	-
• E1 approval		-	No	-	-	-

© Siemens 2022

Overview

SINUMERIK Customized Operator Panels (cOP) and customized Machine Control Panels (cMCP)

Siemens WKC - your competent partner

The Siemens Systems Engineering Plant (WKC) in Chemnitz produces switchgear, electronics components, and customized operation and display components for the global market. The WKC supports you in all phases of product development: from consulting and engineering, to material logistics, production, testing, precommissioning, and shipping worldwide. Each customer decides individually what extent of these services the WKC is to provide.

Customized Operator Panels (cOP) and customized Machine Control Panels (cMCP)

With its know-how and many years of experience in the systems business for machine equipment, Siemens WKC can offer the perfect solution for the operation of machines with its customized Operator Panels (cOP) that offer the following benefits:

- A standardized plug-and-play control panel solution, which is nevertheless tailored to every customer requirement in terms of functionality and design.
- You can either integrate standard Siemens components or customized cMCPs designed to your specification.
- Modern operator panels that have an impressively slimline, compact design

© Siemens 2022

Overview

Different options and variants

Four basic control panel variants are available that are suitable for a wide range of applications. The basic versions can be customized, for example by: a selection of predefined operator elements and their positioning in prescribed areas, the integration of interfaces (USB etc.), or the individual labeling of control keys. This makes for fast yet flexible configuration, which is nevertheless an economical solution.

More far-reaching customer needs can be implemented as a modification or 100%-customized solution. Modifications cover: Scaling the monitor size or cMCP while keeping the basic mechanical design, or individual colors. For the 100% customized solution, all visual and technical options are possible within the applicable conditions, in order to implement a unique control panel solution.

SINUMERIK Customized Operator Panels (cOP) and customized Machine Control Panels (cMCP)

More information

You can find additional information on the internet at:

https://new.siemens.com/global/en/markets/panel-building.html

Or contact us by

email: info.wkc.industry@siemens.com

© Siemens 2022

Overview

Rittal command panel systems are manufactured with exact dimensions for any combination of SINUMERIK operator components, and are ready for installation. Optimum installation of the operator components is assured thanks to the customized dimensions. Select from a wide range of different housing systems, e.g.:

Rittal VIP 6000 – Multi-talented in shape and function

The increased surface size resulting from cooling fins and screw channels is the most reliable and cheapest type of heat dissipation.

- Individual mounting depths from 155 mm to 438 mm
- 3 frame versions (wide, narrow or combined), depending on application and design requirements
- Optimum heat dissipation with 3 types of housing
- Versatile housing connectors
- Continuous edge profile, 3 versions in 5 colors
- Keyboard housing, mounting depths:
  27 mm/44 mm/105 mm (1.06 in, 1.73 in, 4.13 in),
  tray for keyboards
- Continuous screw channels for flexible internal design
- Rear panel screwed or hinged

Rittal Optipanel – The slimline alternative design

- Individual mounting depths: 50 mm/100 mm/150 mm (1.97 in/3.93 in/5.90 in)
- Standard housing matched to SINUMERIK operator panels 19"× 7 HU, mounting depth 100 mm, available ex stock
- Continuous edge profile
- Keyboard housing, mounting depths: 50 mm/100 mm, tray for keyboards, tilting angle continuously adjustable from 80° to 155°
- Continuous T slot for flexible internal design
- Rear panel screwed or hinged

Rittal Comfort Panel – Functional and safe

The "third dimension" command panel in the HMI sector. With a new design and additional functions, the Rittal Comfort Panel is ideally matched to SINUMERIK operator components.

- Individual mounting depths from 74 mm to 464 mm (2.91 in to 18.27 in)
- Standard housing matched to SINUMERIK operator panels 19" × 7 HU, mounting depths:
  74 mm/113 mm/152 mm/191 mm/308 mm, available ex stock
- Keyboard housing, mounting depths: 35 mm/74 mm (1.38 in/2.91 in), tray for keyboards, tilting angle from 88° to 136°, with toothed wheel adjustable in increments of 8°; can be tilted upwards after use to save space where necessary.
- Rear panel screwed or hinged
- Design profile for color coordination with the machine or equipment ID
- All-round soft profile made from plastic reduces the risk of injury
- Flat front frame for optimum access to lateral drives
- Continuous mounting channels for individual dismounting of accessories, internally and externally

© Siemens 2022

Configuration

Rittal Service

Configure your Optipanel/Comfort Panel online now - quickly, easily and reliably at:

www.rittal.de/konfigurator

Sending of:

- Visual presentation of the selected Optipanel/Comfort Panel
- 3D data for integration in the machine and plant construction for virtual sample construction on the screen

Accessories

Support arm systems

- **CP-S** compact, for small and flat panel housings
- **CP-L** open for simple cable inlet, closed for small to medium panel housings
- **CP-C** for medium to high loads
- **CP-XL** open for simple cable inlet, closed for high loads

Stand systems

- Stationary
- Mobile
- Adjustable height
- Console as stable base for supporting arm systems

More information

For full details, please refer to the Rittal Manual. Contact your Rittal representative or order the manual directly from Rittal.

Rittal GmbH & Co. KG

Postfach 1662
35726 HERBORN
GERMANY

Tel.: +49 2772 505-0

Email: info@rittal.de
Internet: www.rittal.de

© Siemens 2022

Overview

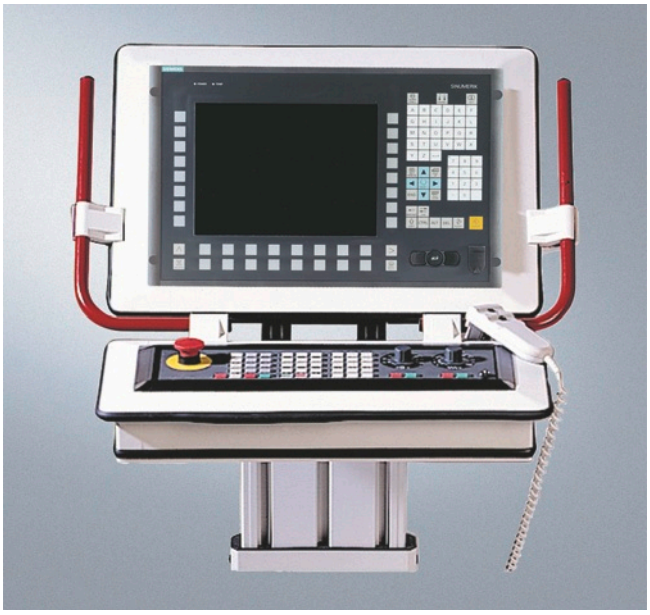

Slim Line Commander

The ROSE SL 2000 and SL 3000 Slim Line Commanders are tailored housing systems for built-in control components with numerous configuration possibilities.

With various mounting depths, the basic versions of the aluminum section housing systems in various sizes provide ideal surface-mounting possibilities for CNC with:

- SINUMERIK OP 010/OP 010S/OP 010C/OP 012/OP 015A
- SINUMERIK machine control panels
- SINUMERIK Machine Push Button Panel
- SINUMERIK full CNC keyboards

SL 2000

- Multifunctional built-in and add-on system with all-round fixing slots
- Individual front panel installation from front or back
- Mounting depths: 80 mm/110 mm/185 mm (3.15 in/4.33 in/7.28 in)

SL 3000

- Variable depth by combining sections
- Hollow chamber profile for hidden installation of drives and connectors
- Mounting depths: 60 mm/160 mm/200 mm (2.36 in/6.30 in/7.87 in)
- Mounting depths with combined profiles: 120 mm/220 mm/260 mm/360 mm (4.72 in/8.66 in/10.24 in/14.17 in)

© Siemens 2022

Overview

LIMANDA

LIMANDA is the ideal polyamide panel housing for installing small operator panels and control devices for mobile and fixed applications to the IP65 degree of protection.

- Dimensions of Limanda 1: 317 mm × 287 mm × 75 mm (12.48 in × 11.30 in × 2.95 in)
- Dimensions of Limanda 2: 270 mm × 248 mm × 64 mm (10.63 in × 9.76 in × 2.52 in)

Suitable for SIMATIC Panels:

- PP7/PP17
- OP7/OP15/OP17
- TP27-6/TP 170
- C7

More information

Are you looking for an individual solution for your application? Ask us! Your partner for industrial housing systems:

ROSE Systemtechnik GmbH

Erbeweg 13-15
32457 PORTA WESTFALICA
GERMANY

Tel.: +49 571 5041-0

Email: rose@rose-pw.de
Internet: www.rose-pw.de

© Siemens 2022

4/2	**Introduction**
4/3	**Engineering software**
4/4	Create MyHMI
4/7	Lock MyCycles
4/8	Create MyCC
4/10	Run MyRobot
4/12	Create MyVNCK
4/13	Create MyConfig
4/15	Access MyMachine /OPC UA
4/16	Access MyMachine /P2P for SINUMERIK 840D sl/828
4/18	SinuCom
4/20	SinuTrain for SINUMERIK Operate
4/22	SIMATIC STEP 7 for SINUMERIK hardware
4/23	**Digitalization in Machine Tool Manufacturing**
4/23	MindSphere (In Cloud)
4/24	Manage MyMachines
4/25	Manage MyMachines /Remote
4/26	Manage MyMachines /Spindle Monitor
4/27	SINUMERIK Integrate Platform (In Line)
4/28	Manage MyPrograms
4/29	Manage MyTools
4/31	Analyze MyCondition
4/32	Access MyData
4/33	Create MyInterface
4/34	Access MyBackup
4/35	AUVESY GmbH – versiondog
4/36	MDT Software – AutoSave Automation Change Management
4/37	SINUMERIK and SINUMERIK Edge (In Machine)
4/37	SINUMERIK and SINUMERIK Edge Optimize MyMachining /Trochoidal
4/38	Adaptive Control and Monitoring

Important ordering information:
The marketing of selected CNC Shopfloor Management Software products will be gradually transferred to Siemens Industry Software. These products can then only be ordered using the corresponding product IDs.
If you need any further information or assistance, please get in touch with your Siemens contact.
www.siemens.com/automation-contact

Security information
In the case of software for remote maintenance or connection to higher-level networks, suitable protection measures must be taken (including industrial security, e.g. network segmentation) to guarantee safe operation of the system.
You can find more information on industrial security on the internet at:
www.siemens.com/industrialsecurity

© Siemens 2022

CNC Shopfloor Management Software

Overview

On track to achieve higher productivity with CNC Shopfloor Management Software

Digitalization is changing production with a lasting effect. It enables machine manufacturers and operators to respond more flexibly to the demands of the market and to enhance their productivity. With the Digital Enterprise Suite, Siemens offers an integrated hardware and software portfolio for digital enterprises.

Particularly for the machine tool sector, Siemens bundles its digitalization portfolio under the term "CNC Shopfloor Management Software". With these unique digitalization solutions, machine tool companies can significantly increase their productivity in production, significantly reduce their development and market launch times, thus consolidating and enhancing their competitiveness in global markets. CNC Shopfloor Management Software allows higher speeds, increased flexibility, enhanced quality, improved efficiency and more safety on the machine, as well as new business models, for example, in the service area.

The CNC Shopfloor Management Software includes applications which are based on a scaled IT infrastructure and offer customized functionalities for engineering and production — from machine-oriented solutions with SINUMERIK to the open, cloud-based, MindSphere IoT operating system.

More information on CNC Shopfloor Management Software is available on the internet at:
www.siemens.com/machinetools-digitalization

CNC Shopfloor Management Software: Increased productivity in engineering

Numerous applications help to make the mechanical and electrical development of your machines more efficient and to optimize the production process. In order to be able to react quickly and flexibly to market and customer requirements, machine manufacturers are increasingly virtualizing and parallelizing the development phases of new machines. The prerequisite for this is the consistent use of all digitalization options — from the initial idea to the commissioning of the finished machine.

More information on CNC Shopfloor Management Software in engineering is available on the internet at:
www.siemens.com/manage-mymachines

CNC Shopfloor Management Software: Increased productivity in manufacturing

Digitalization options provide support for optimizing your production planning in order to ensure high-quality parts production, while at the same time raising the productivity of the machine and the entire production process.

Machine tools are intelligently integrated into manufacturing processes. A precondition of this is the networking of job planning and production, and between machines. This permits error-free transfer of programs and data.

Production-oriented applications on the SINUMERIK Integrate platform provide numerous functions for the Siemens CNC. The platform networks machine tools in production plants, with the applications delivering great potential for raising productivity.

More information on CNC Shopfloor Management Software is available on the internet at:
www.siemens.com/global/en/home/products/automation/systems/cnc-sinumerik/digitalization/manufacturing.html

CNC Shopfloor Management Software and Maintenance

The sale of selected CNC Shopfloor Management Software products will be gradually changed over as from October 1, 2018. For the affected products, the product ID is listed in addition to the order number.

These products will then be shipped, if necessary with a modified type of delivery, using only the product ID, via the Siemens Industry Software (SISW)/Siemens Product Lifecycle Management (PLM) software organization.

More information is available through your Siemens contact and on the internet at:
https://support.industry.siemens.com/cs/ww/en/view/109759136

The CNC Shopfloor Management software licenses are always offered with a maintenance contract. A maintenance contract is an important element in the software business for ensuring customer satisfaction and it represents the basis for continuing customer support, reliability and further product development.

The maintenance contract will replace the previous Software Update Service (SUS) and includes:

- **Free hotline support**
- **Updates/license upgrades**
- **Service Packs**
- **Software download link available without restriction**

Note:

For software products with the new product ID, the terms and conditions of sale and delivery of the respective regional SISW or Siemens PLM organization shall apply

More information

Security information:

Siemens provides products and solutions with industrial security functions that support the secure operation of plants, systems, machines and networks.

In order to protect plants, systems, machines and networks against cyber threats, it is necessary to implement – and continuously maintain – a holistic, state-of-the-art industrial security concept. Siemens' products and solutions constitute one element of such a concept.

Customers are responsible for preventing unauthorized access to their plants, systems, machines and networks. Such systems, machines and components should only be connected to an enterprise network or the internet if and to the extent such a connection is necessary and only when appropriate security measures (e.g. firewalls and/or network segmentation) are in place.

For additional information on industrial security measures that may be implemented, please visit
www.siemens.com/industrialsecurity

Siemens' products and solutions undergo continuous development to make them more secure. Siemens strongly recommends that product updates are applied as soon as they are available and that the latest product versions are used. Use of product versions that are no longer supported, and failure to apply the latest updates may increase customer's exposure to cyber threats.

To stay informed about product updates, subscribe to the Siemens Industrial Security RSS Feed under
www.siemens.com/cert

In order to protect technical infrastructures, systems, machines and networks against cyber threats, it is necessary to implement – and continuously maintain – a holistic, state-of-the-art IT security concept. Siemens' products and solutions constitute one element of such a concept.
For more information about cyber security, please visit
www.siemens.com/cybersecurity#Ouraspiration

© Siemens 2022

Overview

The product suite for optimal adaptation of the SINUMERIK to the machine tool

Mechanical engineering has two objectives: on the one hand, increased efficiency and flexibility in development, through consistent virtualization in the development process, for example, and on the other, provision of supplementary offers for digitalization in the customer's production, all the way to new business models.

Optimizing the engineering process

Increased productivity and efficiency in the machine development process

These days, you must be able to respond flexibly to requests for changes in order to bring products onto the market quickly and cost effectively. Due to the continually rising demand for individual machine concepts and short delivery times, mechanical and electrical development must become more efficient. This requires that added value be generated around the machine and the production of high-quality parts must be ensured at all times.

Digital twin increases flexibility

Thanks to the digitalization of the development process, the machine manufacturer already has all necessary data available as a virtual machine model at a very early stage. This creates a digital twin of the machine that can be used in several application scenarios: Initially, when the machine concept is created, at the virtual commissioning stage, for sales presentation of the machine, on introduction of parts in production, right up to the conversion and servicing. This saves a considerable amount of time as well as improving the concept and the quality and output of production.

Virtual CNC commissioning shortens actual commissioning

The NX Mechatronics Concept Designer helps to shorten the machine development process considerably. By means of virtual commissioning, the capital-intensive phase of the actual commissioning is considerably reduced. To this end the virtual machine model is linked with the actual control system, the SINUMERIK. This means the machine functioning can be tested and optimized under authentic conditions.

Enhanced safety thanks to virtual environment

This procedure offers the machine manufacturer maximum safety and any potential damage to the actual machine during commissioning or running in can be avoided. A further advantage: Machine operators can test their programs for parts manufacture at an early stage under near real-life conditions in a virtual environment.

Machine tool manufacturers want intelligent machines in order to expand technological functionality, with optimum adaptation of machine operation to suit its technology. Siemens has the answer to these requirements with the SINUMERIK engineering software product suite.

The scope of functions of the SINUMERIK NCU can be expanded with compile cycles. A range of standard compile cycles is available for this purpose. Options have been created to support special kinematics and compensations, for example. Create MyCC supports the creation of manufacturer-specific functions in the CNC kernel.

The openness in the HMI enables full access to all relevant data of the SINUMERIK NCU, PLC and drives. SINUMERIK Operate can also be adapted in various ways:

- By configuring prepared screen forms, such as Create MyHMI /PRO
- By configuring with standard tools, such as Create MyHMI /WinCC
- By programming in Basic C++, .Net or Qt with Create MyHMI /3GL

Remote data access is possible via the OPC UA protocol with Access MyMachine /OPC UA.

Extensive support for commissioning is offered by Create MyConfig, Access MyMachine /P2P, SinuCom or SIMATIC STEP 7, for example.

The Run MyRobot product suite offers optimal integration of robots into machines for handling or machining tasks.

Run MyVNCK offers user-side support – the link to a virtual CNC kernel in a simulation system. You can protect the technological know-how of your cycles with Lock MyCycles.

	SINUMERIK engineering software
Implement HMI functions	Create MyHMI (Run MyHMI)
Access protection for cycles	Lock MyCycles
Implement functions in the CNC kernel	Create MyCC (Run MyCC)
Integrate robots	Run MyRobot
Integrate CNC functionality in simulation system	Create MyVNCK
Commissioning modular machines	Create MyConfig
Host computer interface with OPC UA	Access MyMachine /OPC UA
Perform commissioning and remote maintenance	Access MyMachine /P2P
Commissioning and service tools	SinuCom
Programming software	SinuTrain for SINUMERIK Operate
Service functions	SIMATIC STEP 7 for SINUMERIK hardware

© Siemens 2022

Overview

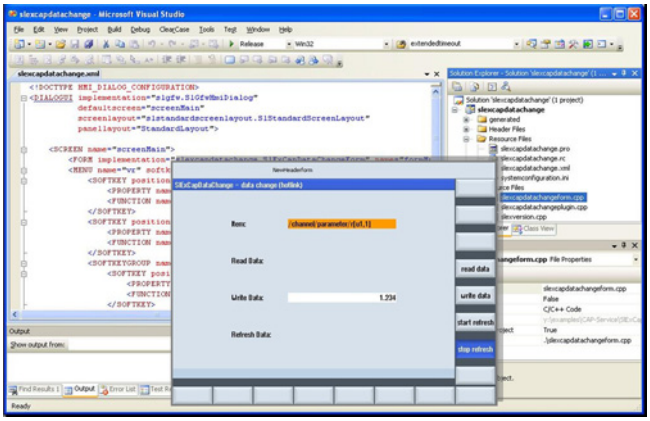

The openness in the HMI enables customers to implement their own integrated operating and display functions or their own user interfaces. This means that users can tailor HMI functions and technological machine operating procedures to meet their own requirements.

The HMI application can be created either by programming in a high-level language or by means of configuration tools.
Run MyScreens facilitates simple configuration using a standard editor.

Application

	Hardware	CNC software option
Create MyHMI /3GL	SINUMERIK Operate • For SINUMERIK 840D sl NCU 710.3B PN NCU 720.3B PN NCU 730.3B PN IPC427E Windows 10 Siemens PC systems with Windows 10 64 bit	Run MyHMI /3GL Software option **P60**
Create MyHMI /WinCC	SIMATIC Comfort Panels SIMATIC Mobile Panels	Run MyHMI /SIMATIC OP Software option **P03**
	PC systems SIMATIC IPC 4x7D/6x7D PN/IE	Run MyHMI /WinCC Software option **P61**
	• For SINUMERIK MC SIMATIC ITC Thin Client Operator Panel SIMATIC IFP Industrial Flat Panel	Run MyHMI /WinCC Software option **P61**
Create MyHMI /PRO	SINUMERIK Operate • For SINUMERIK 840D sl NCU 710.3B PN NCU 720.3B PN NCU 730.3B PN IPC4x7E Windows 10 Siemens PC systems with Windows 10 64 bit	Run MyHMI /PRO Software option **P47**

Function

Create MyHMI /3GL

The Create MyHMI /3GL programming package allows users to develop high-level language applications in the Qt/C++ programming language for the SINUMERIK Operate user interface. A C++ or Microsoft .NET-based communication interface is also provided so that users can create a customized user interface with individual look & feel.

- Integration of single or multiple operating screens as well as user-defined operating areas in SINUMERIK Operate.
- Independently executable user interfaces
- Support for C++ or .NET interfaces

The respective software version of the Create MyHMI /3GL programming package for SINUMERIK Operate is required for user development of applications.

Example:
SINUMERIK CNC/Operate software version 4.92 or 6.13 requires Create MyHMI /3GL 4.92.

Use of Create MyHMI /3GL is always subject to conclusion of an OEM contract.

Create MyHMI /WinCC

The graphics-based SIMATIC WinCC Advanced engineering tool is used as the basis the configuration of user interfaces. This means that customized screens can be created that will execute on SIMATIC Panels as well as on PC systems.

Create MyHMI /WinCC is required in addition to SIMATIC WinCC Advanced for creating user interfaces with access to NCU data and for using the special SINUMERIK HMI function (select parts program).

With Create MyHMI /WinCC, any skilled worker with basic technical experience is capable of creating technology-specific modules for operating and visualizing without the need for high-level language expertise.

SIMATIC WinCC Runtime Advanced is included in the scope of supply of Create MyHMI /WinCC. The SIMATIC WinCC Advanced Engineering System must be ordered separately, as required.

You can find more information in the Siemens Industry Mall: www.siemens.com/industrymall

For communication with a SINUMERIK NCU, either the Run MyHMI /SIMATIC OP or Run MyHMI /WinCC software option is required depending on the system, panel or PC used.

Create MyHMI /PRO

The Create MyHMI /PRO configuration system together with the Run MyHMI PRO software option for SINUMERIK ONE and SINUMERIK 840D sl provides a machine user interface for operator control and monitoring tasks in mass production, such as for flexible lines, machining centers and assembly lines. Run MyHMI /PRO standardizes the operation of machines with diverse tasks and technologies by means of operating screen forms and a parameterizable navigation menu.

The technology-specific operating screen forms are combined into function groups, e.g.:

- Machine functions:
  Workpiece counting, cycle times, workpiece overview
- EE@Transline (energy efficiency)
- Help texts
- Overviews
- Tool changing functions
- Setup/manual operation functions

Prepared diagnostics functions support rapid fault localization in the event of a machine fault.

Diverse target hardware is supported to ensure the best possible price/performance ratio for different applications.

© Siemens 2022

Selection and ordering data

Description	Article No.	Product ID
Engineering system		
Create MyHMI /3GL Program screens, operating areas and user interfaces with high-level languages For SINUMERIK 840D sl / SINUMERIK MC / SINUMERIK ONE Engineering system languages: Chinese Simplified, English, German Runtime system languages: Supports all languages of the HMI runtime system Requirement: HMI OA contract		
• Single License on DVD-ROM Software version 4.95 for SINUMERIK 840D sl Create MyHMI /3GL 4.95 is compatible with Operate 6.15 Can only be ordered via SISW	**6FC5861-1YC46-5YA0**	**MCS1200**
• Software Update Service	–	**Maintenance package**
Qt license key Discount when ordering via SINUMERIK delivery note from The Qt Company Existing Qt-4 license key for SINUMERIK can be converted to Qt-5 License key by the Qt Company	You can find more information at: https://support.industry.siemens.com/cs/ww/en/view/92191589	
Create MyHMI /WinCC Configure screens and operating areas with WinCC for SINUMERIK 840D sl / SINUMERIK MC / SINUMERIK ONE		
• Single license without data storage medium	**6FC5861-3YP00-0YB0**	**MCS1210**
• Single license on DVD-ROM current software version	**6FC5861-3YC00-0YA0**	**MCS1210**
• Single license on DVD-ROM software version 16	**6FC5861-3YC46-0YA0**	**MCS1210**
• DVD-ROM without license software version 16	**6FC5861-3YC46-0YA8**	**MCS1210**
• Software Update Service	**6FC5861-3YP00-0YL8**	**MCS1210-MT**
Create MyHMI /PRO		
• DVD-ROM without license For SINUMERIK 840D sl and SINUMERIK ONE Current software version	**6FC5867-3YC00-0YA8**	**MCS1220**
• DVD-ROM without license For SINUMERIK 840D sl Software version 8.3	**6FC5867-3YC80-0YA8**	**– *)**
• DVD-ROM without license For SINUMERIK 840D sl and SINUMERIK ONE Software version 9.4	**6FC5867-3YC84-0YA8**	**MCS1220**

Description	Article No.	Product ID
Runtime license		
Run MyHMI /3GL For SINUMERIK 828D/840D sl Software option (in conjunction with SINUMERIK Operate operating software) Contains Run MyScreens (option **P64**) as of software version 4.7 • Single License without data storage medium	**6FC5800-0AP60-0YB0**	**MCS1110**
Run MyScreens For SINUMERIK 840D sl/828D Software option (in conjunction with SINUMERIK Operate operating software) • Single license without data storage medium	**6FC5800-0AP64-0YB0**	**– *)**
Run MyHMI /WinCC For SINUMERIK 840D sl Software option (in conjunction with SINUMERIK Operate operating software) • Single license without data storage medium	**6FC5800-0AP61-0YB0**	**MCS1160**
Run MyHMI /PRO For SINUMERIK 840D sl Software option (in conjunction with SINUMERIK Operate operating software) • Single license without data storage medium	**6FC5800-0AP47-0YB0**	**MCS1130**
Run MyHMI /PRO For SINUMERIK 840D sl Software option (in conjunction with SINUMERIK Operate operating software) • Electronic license as PDF	**6FC5800-0AP47-0YH0**	**MCS11300**
Run MyHMI/SIMATIC OP For SINUMERIK 840D sl Software option (in conjunction with SIMATIC Comfort Panels) • Single license without data storage medium	**6FC5800-0AP03-0YB0**	**MCS1150**

*) Marketing and sales via Siemens regional company.

© Siemens 2022

Integration

Run MyHMI /3GL

HMI Open Architecture applications created with the Create MyHMI /3GL C++/Qt programming package can be executed on NCUs, MCUs (with ECO package) PCUs or IPCs with the Run MyHMI /3GL software option.

HMI Open Architecture applications which utilize the C++ or .NET interface can only execute on PCUs or IPCs and require the Run MyHMI /3GL software option.

Software option Run MyHMI /3GL is required for the installation and operation of other software which is integrated in SINUMERIK Operate or in parallel with it. This also applies in cases where the supplementary software does not utilize SINUMERIK communication interfaces.

Run MyHMI /3GL enables users to integrate individual program screens, create personal operating areas and set up background functions with data communication. Run MyHMI /3GL (option **P60**) contains Run MyScreens (option **P64**) as of software version 4.7.

Run MyScreens

The Run MyScreens software option permits the execution of text files with the EasyScreen format. These configurations can execute on SINUMERIK NCUs or PCUs. Users can design their own user interfaces in order to visualize either machine-manufacturer or end-user functional expansions or simply their own screen form layouts.

Run MyHMI /WinCC

The Run MyHMI /WinCC software option supports communication between an NCU, MCU and WinCC Runtime Advanced. WinCC Runtime Advanced can be used to integrate full-screen images into the OEM frame area of SINUMERIK Operate.

The SIMATIC WinCC Advanced engineering software and the Create MyHMI /WinCC software option are needed to create these images. SIMATIC WinCC Runtime Advanced is already integrated into the SIMATIC Panels.

SIMATIC WinCC Runtime Advanced must be installed in PC systems. In addition to WinCC Runtime Advanced, the Run MyHMI /WinCC installation package is also required.

To use SIMATIC WinCC Runtime Advanced on PC systems with SINUMERIK, one Run MyHMI /WinCC software option is required for each SINUMERIK NCU. No SIMATIC Powertags are required for the PC stations.

The supplied HMI integration tool supports the integration of the WinCC RT Advanced configuration on the SINUMERIK PCU or the SIMATIC IPC427D into SINUMERIK Operate.

Run MyHMI /PRO

Applications created with Create MyHMI /PRO can be executed on NCUs with ITC or IPC 4x7E with the Run MyHMI /PRO software option.

The standard application is easy to adapt or expand and is therefore ideally suited for implementing customized versions for project-specific use.

The operator screen forms for Run MyHMI /PRO can be parameterized, configured, and loaded into the target hardware with the Create MyHMI /PRO configuration software that is executable on PGs/PCs. Two diagnostics functions are available for the process error diagnostics integrated in Run MyHMI /PRO. Process error diagnostics are used in combination with S7-PDIAG and S7-GRAPH.

Constraint:
It is possible to integrate the diagnostic screens of WinCC Advanced for process fault diagnostics of a SIMATIC S7-1500 with SINUMERIK Run MyHMI /PRO. The integrated process fault diagnostics of SINUMERIK Run MyHMI /PRO cannot be used with this configuration.

Users can freely configure their own operator screen forms using the simple, integrated graphic editor.

Run MyHMI /SIMATIC OP

The Run MyHMI /SIMATIC OP software option allows users to run their own WinCC applications on SIMATIC Comfort and Mobile Panels on a SINUMERIK CNC. The SIMATIC WinCC Advanced engineering software and the relevant Create MyHMI /WinCC software option are needed to create these applications.

Adding the SINUMERIK software option enables functions to be used in conjunction with:

- CNC variable dialog (symbolic presentation)
- CNC file management, e.g. selection of part program
- CNC functions, e.g. apply tool, CNC Start/Stop and other PI services
- Alarms and messages in plain text

SIMATIC Panels can be connected via PROFIBUS or Ethernet depending on which interface is provided.

To use WinCC applications on the SIMATIC Comfort and Mobile Panels, one Run MyHMI /SIMATIC OP software option is required for each SINUMERIK NCU. The Run MyHMI /SIMATIC OP license comprises the SIMATIC archive and recipe licenses, as before.

More information

For more information, go to:

https://support.industry.siemens.com/cs/ww/en/view/109759136

You can obtain technical support and advice from:

Siemens AG
Digital Factory

Stuttgart office
Competence Center Machine Tools

Fax: +49 711 137-2838

You can obtain the Qt license key directly from:

The Qt Company

Contact: Volker Wenzel

For more information, go to:

https://support.industry.siemens.com/cs/ww/en/view/92191589

© Siemens 2022

Overview

Lock MyCycles can be used to encrypt cycles and then store them as protected data in the CNC. Execution in the CNC is possible without restrictions, but it is not possible to view the cycle. This protects the internal company know-how. The cycle can, however, be copied in encrypted form. It can, therefore, be used on other machines. However, it is also possible to link the cycle permanently to a specific CNC hardware.

Selection and ordering data

Description	Article No.	Product ID
Lock MyCycles Cycle protection (OEM) for SINUMERIK 840D sl		
• Single license without data storage medium	**6FC5800-0AP54-0YB0**	**MCS1100**
• Single license Electronic license as PDF	**6FC5800-0AP54-0YH0**	**MCS11000**

© Siemens 2022

Overview

Create MyCC can be used to implement manufacturer-specific functions (compile cycles) in the CNC kernel. They are programmed in C or C++ on a SUN workstation with the Solaris operating system. The result is uploaded to the SINUMERIK as an executable file and permits the modification and expansion of the real-time area of the control.

Create MyCCI supports the development of loadable compile cycles based on customized interfaces without requiring special hardware as a development environment. For this special application, the customer uses GNU compiler and GNU linker software in an environment known as "Cygwin software shell" on a Windows PC. Use of this application requires installation of the corresponding interface as a loaded compile cycle on the control system.

Prerequisite for Create MyCC is an OEM contract. The Create MyCC package is subject to the issue of an export license.

Run MyCC

The openness in the CNC kernel of the SINUMERIK 840D sl / SINUMERIK ONE allows SINUMERIK users to develop solutions for (almost) every technological problem.

This is possible with the integration of technological add-on functions in the CNC software for NCU in the form of compile cycles. These types of compile cycles can either be programmed by the user based on Create MyCC and the appropriate development environment, or through development and testing in industrial conditions contracted to Siemens.

Loadable compile cycles that offer special interfaces for customized developments can be implemented with Run MyCCI.

Application

A typical example for the use of compile cycles are special transformations for specific machine kinematics. With these transformations, workpieces can be programmed in Cartesian coordinates while the transformation calculates the required machine axis movements.

Selection and ordering data

Description	Article No.	Product ID
Create MyCC CNC kernel openness. OEM contract required.	On request	**On request**
Create MyCCI For CNC kernel openness based on customized interface. COA contract required.	On request	**On request**
Create MyCCI /Interpreter For CNC kernel openness based on interpreter interface. COA contract required.	On request	**On request**

Description	Article No.	
Run MyCC For SINUMERIK 840D sl License for compile cycles developed by the OEM • Single license Without data storage medium	On request	**On request**
Technological add-on functions in the form of loadable compile cycles as an option for SINUMERIK 840D sl		
Run MyCC /RESU Continue machining at the contour (retrace support)	**6FC5800-0AM24-0YB0**	**On request**
Run MyCC /2TRA[1)] Transformation: DOUBLE-TRANSMIT	**6FC5800-0AM25-0YB0**	**On request**
Run MyCC /RCTRA Transformation: Handling	**6FC5800-0AM31-0YB0**	**On request**
Run MyCC /HSLC High-speed laser switching signal	**6FC5800-0AM38-0YB0**	**On request**
Run MyCC /CLC 1D/3D clearance control in position control cycle	**6FC5800-0AM40-0YB0**	**On request**
Run MyCC /PACO Transformation: PARACOP 3 axes	**6FC5800-0AM44-0YB0**	**On request**
Run MyCC /SCIS[1)] Transformation: Pantograph kinematics	**6FC5800-0AM51-0YB0**	**On request**
Run MyCC /SEC-KT Spatial compensation for kinematic transformations	**6FC5800-0AM57-0YB0**	**On request**
Run MyCC /SCRA Transformation: SCARA 2/3 axes	**6FC5800-0AM68-0YB0**	**On request**
Run MyCC /SKID Transformation: Double slide	**6FC5800-0AM80-0YB0**	**On request**
Run MyCC /AXCO[1)] Compensation of a forced mechanical coupling	**6FC5800-0AM81-0YB0**	**On request**
Run MyCC /KPXT Drive current measurement	**6FC5800-0AM82-0YB0**	**On request**
Run MyCC /DSTT[1)] Transformation: Dynamic Swivel TRIPOD, Basis 5 axes	**6FC5800-0AM84-0YB0**	**On request**
Run MyCC /CRIP[1)] Crank interpolation	**6FC5800-0AN04-0YB0**	**On request**
Run MyCC /PROT Axis collision protection	**6FC5800-0AN06-0YB0**	**MCS4140**
Run MyCC /VIBX Vibration extinction	**6FC5800-0AN11-0YB0**	**On request**
Run MyCC /IMD-L[1)] Integrated tool monitoring and diagnostics IMD Light	**6FC5800-0AN12-0YB0**	**MCS3120**
Run MyCC /IMD Integrated tool monitoring and diagnostics IMD BASE	**6FC5800-0AN13-0YB0**	**MCS3130**

[1)] Compile cycle that is not generally released. Requires machine-specific release process. Please contact your local Siemens sales office or Regional Company.

© Siemens 2022

Selection and ordering data

Description	Article No.	
Technological add-on functions in the form of loadable compile cycles as an option for SINUMERIK 840D sl *(continued)*		
Run MyCC /VCS-A3 Spatial compensation for 3 axes	**6FC5800-0AN15-0YB0**	**On request**
Run MyCC /VCS-A5 Spatial compensation for 5 axes	**6FC5800-0AN16-0YB0**	**On request**
Run MyCC /VCS-A5 PLUS Spatial compensation for 5 axes plus	**6FC5800-0AN17-0YB0**	**On request**
Run MyCC /RDCC[1)] Transformation: Redundant axes at workpiece	**6FC5800-0AN26-0YB0**	**On request**
Run MyCC /VCS-ROT[1)] Spatial compensation for 2 rotary axes	**6FC5800-0AN31-0YB0**	**On request**
Run MyCC /DGEN[1)] Transformation: Double generic	**6FC5800-0AN34-0YB0**	**On request**
Run MyCC /THYK[1)] Transformation: TRIPOD hybrid kinematics	**6FC5800-0AN36-0YB0**	**On request**
Run MyCC /ROTE[1)] Transformation: Rotating eccentric	**6FC5800-0AN37-0YB0**	**On request**
Run MyCC /ECCE[1)] Transformation: Eccentric	**6FC5800-0AN41-0YB0**	**On request**
Run MyCC /MSPZ Metal spinning protection area	**6FC5800-0AN42-0YB0**	**On request**
Run MyCC /2RPT[1)] Transformation: Rotating workpiece and tool	**6FC5800-0AN43-0YB0**	**On request**
Run MyCC /ECCA[1)] Transformation: Eccentric axis	**6FC5800-0AN44-0YB0**	**On request**
Run MyCC /SW2A Transformation: Swivel by 2 linear axes	**6FC5800-0AN45-0YB0**	**On request**
Run MyCC /COCO[1)] Magnetic cogging torque compensation	**6FC5800-0AN46-0YB0**	**On request**
Run MyCC /SANS Scalable analog setpoint	**6FC5800-0AN48-0YB0**	**On request**
Run MyCC /COTE Technological functions with compressor	**6FC5800-0AN50-0YB0**	**On request**
Run MyCC /XOUT[1)] Extrapolated switching signals	**6FC5800-0AN51-0YB0**	**On request**
Run MyCC /PIVA[1)] Transformation: Swivel axis	**6FC5800-0AN52-0YB0**	**On request**
Run MyCC /ROBX[1)] Transformation: Robotic Extended	**6FC5800-0AN54-0YB0**	**On request**
Run MyCC /AMOV Variable-based axis movement	**6FC5800-0AN62-0YB0**	**On request**
Run MyCC /PRIG[1)] Path-related pulse output	**6FC5800-0AN76-0YB0**	**On request**
Run MyCC /TRA-6A[1)] Transformation: Additional function 6th axis	**6FC5800-0AM66-0YB0**	**On request**

Description	Article No.	
Loadable compile cycles that offer special interfaces for customized developments can be implemented with Run MyCCI		
Run MyCCI /COOC[1)] COA interface for compiled OEM cycles	**6FC5800-0AM67-0YB0**	**On request**
Run MyCCI /VCI Spatial compensation interface	**6FC5800-0AN74-0YB0**	**On request**
Run MyCCI /UCI[1)] Universal spatial compensation interface	**6FC5800-0AN75-0YB0**	**On request**

[1)] Compile cycle that is not generally released. Requires machine-specific release process. Please contact your local Siemens sales office or Regional Company.

© Siemens 2022

Overview

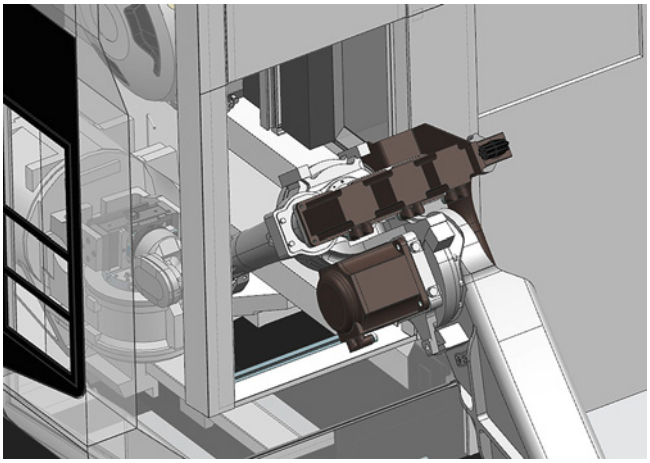

Run MyRobot /Handling for SINUMERIK

The Run MyRobot /Handling option enables robot and CNC programs to be bundled in the CNC. It allows uniform operation of the robot and the machine tool by means of the SINUMERIK Operate user interface.

Robot functions such as programming, manual travel, teach-in or diagnostics can be directly implemented via the CNC.

The robot is programmed by means of cycles in the SINUMERIK. The robots and machine tool are coordinated by means of the channel synchronization.

SINUMERIK Run MyRobot /Machining

The Run MyRobot /Machining option enables the continuous-path control of the robot by the CNC. All types of SINUMERIK programming are possible with Run MyRobot /Machining: G code, programGUIDE, ShopMill, etc.

If the manufacturing process is modelled as a digital twin, the robot can be integrated into the CAD/CAM-CNC process chain.

SINUMERIK Run MyRobot /Direct Control

The Run MyRobot /Direct Control option enables a drive-based connection of the robot kinematics to the SINUMERIK CNC (direct control concept).

It offers setup, operation and programming in the SINUMERIK-specific environment (Create MyConfig, G-Code, programGUIDE etc.) and preconfigured setting data for selecting robots.

No robot-specific programming knowledge is required. The integration of the digital twin of the robot into the CAD/CAM system, the utilization of the SINUMERIK post processor and the VNCK simulation addresses the entire configuration workflow.

Benefits

Run MyRobot /Handling for SINUMERIK

- Operate the robot quickly using familiar CNC knowledge
- Efficient loading and unloading of a machine
- No knowledge of robots is necessary. The machine operator can work with the robot without any high overhead training.

SINUMERIK Run MyRobot /Machining

- Interfacing the robot to the SINUMERIK CNC increases productivity and flexibility and enables high precision and quality of the workpieces.
- Machining programs are executed more precisely as a result of the CNC path planning, interpolation and transformation.
- NX CAM Robotics enables the robot to be integrated universally in the CAD/CAM process chain, similar to a machine tool.

SINUMERIK Run MyRobot /Direct Control

- Integration of a robot mechanism into the SINUMERIK CNC increases productivity and flexibility and optimizes workpiece precision and quality.
- The direct control concept simplifies the configuration of the control hardware significantly. The result is optimization of spare part management.
- Less time and effort for commissioning and configuration – including ready-to-use setting data for selected robots.
- Here, too, NX CAM Robotics enables the robot to be integrated universally in the CAD/CAM process chain, similar to a machine tool.

Configuration

We generally recommend that configuring be performed with the SIZER for Siemens Drives engineering tool. The required options are then automatically calculated.

The SIZER for Siemens Drives engineering tool is available free on the Internet at:

www.siemens.com/sizer

© Siemens 2022

Selection and ordering data

Description	Article No.	Product ID
Run MyRobot /Handling for SINUMERIK 840D sl Software option Integrates robots into the operation, programming and diagnostics of the SINUMERIK 840D sl • Single license without data storage medium	**6FC5800-0AP72-0YB0**	**MCS1190**
Requires additional options:		
1 additional machining channel	**6FC5800-0AC10-0YB0**	**– *)**
Run MyHMI /3GL	**6FC5800-0AP60-0YB0**	**MCS1110**
Run MyScreens	**6FC5800-0AP64-0YB0**	**– *)**
SINUMERIK Run MyRobot /Direct control for SINUMERIK 840D sl Software option CNC robot integration with a SINUMERIK 840D sl Base transformation Run MyCC /ROBX/AR	**6FC5800-0AR05-0YB0**	**– *)**
Requires additional options:		
Multi-axis interpolation (> 4 interpolating axes)	**6FC5800-0AM15-0YB0**	**– *)**
3 additional axes/spindles[1)]	**6FC5800-0AA00-0YB0**	**– *)**
SINUMERIK Operate /NCU	**6FC5800-0AS00-0YB0**	**– *)**
Lock MyCycles	**6FC5800-0AP54-0YB0**	**MCS1100**
Once only for multiple systems: Create MyConfig SW version 4.7 SP2 • Single license without data storage medium	**6FC5862-2YC44-0YA0**	**MCS1020**

More information

You will find further information in the "Updates" at

https://support.industry.siemens.com

You can obtain technical support and advice from:

Siemens AG
MTS APC Tech Team

Frauenauracher Straße 80
91056 ERLANGEN
GERMANY

Email: MC-MTS-APC-Tech-Team.i-dt@siemens.com

*) Marketing and sales via Siemens regional company.
1) The quantity "3" must be specified in the order.

© Siemens 2022

Overview

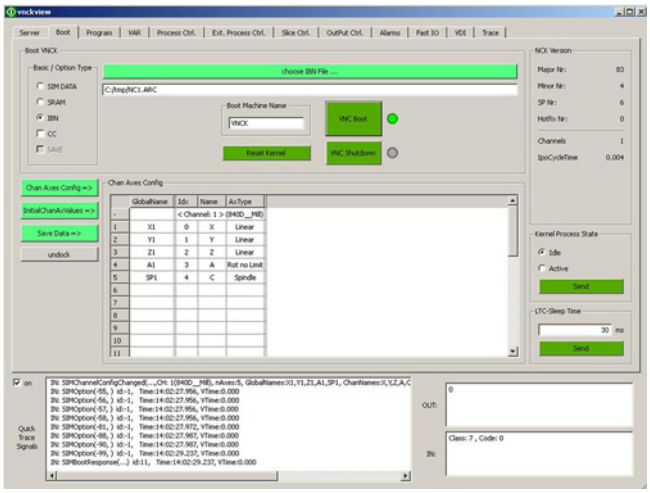

Create MyVNCK enables the commissioning of simulation systems into which Run MyVNCK can be integrated. By means of Create MyVNCK, the functionalities for booting SimData or NC series commissioning archives are additionally enabled. The Create MyVNCK – ALM license is an option and requires the Run MyVNCK – ALM license to run.

Run MyVNCK

Run MyVNCK integrates CNC functions into the simulation process. The kernel uses the same source code as the CNC kernel in the CNC. This allows CNC algorithms, language scope, commissioning, data management and communication to be handled in the same way for both Run MyVNCK and the CNC kernel. Run MyVNCK is capable of simulating control sequences with their full range of functions. CNC programs including all their high-level language elements can therefore be checked for syntactic correctness and executability. The working area can be reliably assessed for risk of collision and the workpiece geometry and motion behavior can be evaluated. Program runtimes can also be calculated.

By deploying other components, such as the CAD data for the real machine, the machine manufacturer or CAM system manufacturer can create a virtual machine that resembles the real machine as closely as possible.

The licenses for operation with Run MyVNCK are used for executing a finished project and allow the SRAM to be booted.

Selection and ordering data

Description	Article No.	Product ID
Create MyVNCK – ALM Software option Single license for ALM Option for Run MyVNCK for the use of VNCK View and NC archive files		
• Software version 4.5.5 or higher	**6FC5868-1YF41-0YB0**	**MCS40720**
• Software version 4.7.5 or higher	**6FC5868-1YF43-0YB0**	**MCS4072**
• Software version 4.8.1 or higher	**6FC5868-1YF45-0YB0**	**MCS40721**
Run MyVNCK – ALM Single license for ALM		
• Software version 4.5.5 or higher	**6FC5868-0YF41-0YB0**	**MCS40710**
• Software version 4.7.5 or higher	**6FC5868-0YF43-0YB0**	**MCS4071**
• Software version 4.8.1 or higher	**6FC5868-0YF45-0YB0**	**MCS40711**
Run MyVNCK – ISV ISV copy license for Run MyVNCK (regardless of version)	**6FC5868-0YF00-0YB0**	**MCS4073**

© Siemens 2022

Overview

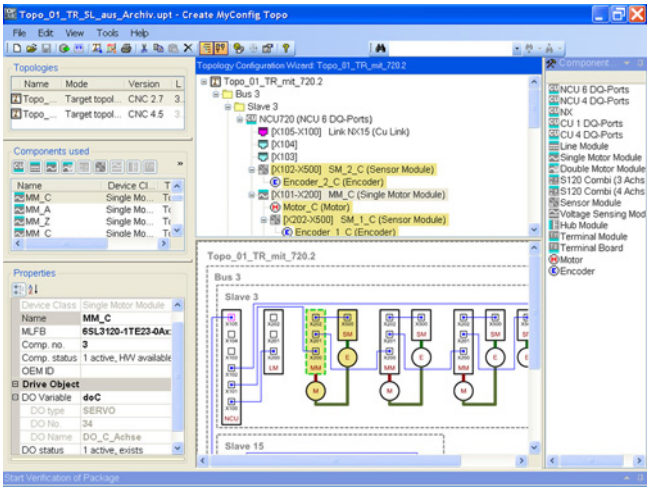

Create MyConfig enables the machine manufacturer to create and run a project for automated commissioning/production of machines with SINUMERIK ONE, SINUMERIK 840D sl and SINUMERIK 828D CNC controls. These CNCs can even be upgraded configured and executed automatically on the end user's premises.

The modular concept of Create MyConfig enables different machines of a series to be commissioned and upgraded with one Installer package.

The individual operations on the machine can be performed faster and with greater ease and reliability.

Benefits

- Significantly reduced time for commissioning or upgrade
- Structured preparation and automated processes avoid commissioning and upgrading errors.
- Prevention of topological wiring errors, simple adaptation of topologies
- Reproducibility of the automatic commissioning and upgrading
- Simplification of the commissioning and upgrade processes on the system
- No dependence on the CNC software version; Installer packages can be used as from software version 2.6 - software version 4.7 (SINUMERIK 840D sl only)
- Detailed knowledge of the control system is essential only to configure the Create MyConfig update package, but not to perform commissioning or upgrades at the machine (menu-driven commissioning).

Design

Create MyConfig comprises the following components:

- CMC Expert
  - Configuration of an Installer package, which contains a configurable sequence of production or upgrade steps, and the associated data for various machine versions
  - Creation of operator menus/operator help for package execution
  - Creation of automated scripts
- CMC Diff
  - Data comparison and automatic adaptation of folders, SINUMERIK archives, files and CNC data
  - Editing of CNC and drive archives, even directly on the machine, by simple archive download and upload function
  - Comparison of folders and data, even within archives
- CMC Topo
  - Creating and editing SINAMICS topologies
  - Adaptation of topologies, even without creating packages, with the archive download and upload function
  - Axis-drive assignment

© Siemens 2022

Function

Create MyConfig offers support for the installation, upgrade and retrofit of, for example:

- HMI installations (install/upgrade CNC software)
- OEM applications (copy files and data, adapt ini files)
- NCK area (read/adapt/set machine data)
- ShopMill/ShopTurn applications (transfer programs)
- Standard cycles (insert cycles)
- Measuring cycles (insert cycles)
- Languages (install languages according to requirements)
- PLC (e.g. automated adaptation of basic program to match NCK software version)
- OEM images (copy files)
- Drives
  - Manipulation of SINAMICS data in drive archives
  - Creation of a SINAMICS archive with predetermined topology
  - Assignment of drive data in different SINAMICS topologies

Integration

Requirements:

- SINUMERIK 840D sl with SINUMERIK Operate

Requirements for PC/PG:

- Windows 10 operating system
- Drive with 250 MB of free memory space
- Network/Ethernet port/USB flash drive

The following must also be installed on the PC/PG:

- Microsoft .NET Framework (included on product CD)
- Microsoft Internet Explorer version 6 or higher
- Acrobat Reader version 4 or higher

Selection and ordering data

Description	Article No.	Product ID
Create MyConfig For SINUMERIK 840D sl series commissioning and software upgrading		
• Single license on data storage medium Software version 4.7	**6FC5862-2YC44-0YA0**	**MCS1020**
• Single license without data storage medium	**6FC5862-2YP00-0YB0**	**MCS1020**
• Without license on data storage medium	**6FC5862-2YC44-0YA8**	**MCS1020**
Create MyConfig Software for series production and software upgrading of a SINUMERIK ONE		
• Single license on data storage medium Software version 6.0	**6FC5862-2YC60-0YA0**	**Product ID on request**
• Without license on data storage medium Software version 6.0	**6FC5862-2YC60-0YA8**	**Product ID on request**

© Siemens 2022

Overview

OPC UA (Unified Architecture) is a standardized, industrial communication protocol.

With the Access MyMachine /OPC UA option, the SINUMERIK ONE, 840D sl and 828D provide an OPC UA server with the capability of writing to and reading from the tag management of the entire SINUMERIK, as well as logging in to value change. Additionally, the OPC UA server offers event-based provision of SINUMERIK alarms and multiple methods for simple interaction with SINUMERIK. It also provides support for the creation of a customer-specific object model.

The Access MyMachine /OPC UA for PLC option offers a second OPC UA interface (server and client) on the integrated S7-1500 for SINUMERIK ONE. The server grants high-performance access to PLC data, as well as the possibility of implementing one's own methods. Moreover, the creation of a customer-specific object model is also possible.
The integrated client allows access from the PLC program to external OPC UA servers. The client supports the Read/Write and Method Call functions.

Application

	Hardware	CNC software option
Access MyMachine /OPC UA	SINUMERIK ONE SINUMERIK 840D sl SINUMERIK 828D	Access MyMachine /OPC UA Software option **P67**

Integration

Requirements for Access MyMachine /OPC UA:

- SINUMERIK Operate

Selection and ordering data

Description	Article No.	Product ID
Runtime license		
Access MyMachine /OPC UA For SINUMERIK 840D sl and SINUMERIK 828D Software option Supply of a license (in conjunction with SINUMERIK Operate operating software) • Single license without data storage medium	**6FC5800-0AP67-0YB0**	**MCS31402 *)**
Access MyMachine /OPC UA For SINUMERIK 840D sl and SINUMERIK 828D Software option Supply of an electronic license (in conjunction with SINUMERIK Operate operating software) • Single license without data storage medium	**6FC5800-0AP67-0YH0**	**MCS31404 *)**

Function

The increasing vertical networking in production requires communication that is independent of the platform. As a reliable industrial communication protocol which is not bound to a specific manufacturer or platform, OPC UA is enjoying ever greater popularity as a communication standard for industrial applications.

The SINUMERIK **Access MyMachine /OPC UA** option offers the following functionality:

OPC UA server

- Data access
  - Reading, writing, subscription of all SINUMERIK tags
  - Methods for file transfer, program selection, and creation of tools and cutting edges
- Alarms and events
  - Event-based provision of SINUMERIK alarms
- CSOM
  - Loading of customer-specific object models
- Additional features
  - Easy commissioning and diagnostics with Operate
  - Security: user management, encrypted communication
  - Can be reinstalled in SINUMERIK with older SINUMERIK software versions 4.5 from SP4

The SINUMERIK **Access MyMachine /OPC UA for PLC** option offers the following functionality:

OPC UA server

- Data access
  - Reading, writing, subscription of all PLC tags
  - Allows the creation of your own methods
  - Access to structures and arrays as complete objects (S7-1500 only)
- CSOM
  - Loading of customer-specific object models
- Additional features
  - Easy commissioning and diagnostics with TIA Portal
  - Security: user management, encrypted communication

OPC UA client

- Data access
  - Reading and writing of tags from external OPC UA servers
  - Control of the OPC UA communication directly from the user program
  - Call up of methods on external OPC UA servers
- Additional features
  - Easy commissioning and diagnostics with TIA Portal
  - Security: user management, encrypted communication

More information

You will find further information in the "Updates" at:
https://support.industry.siemens.com

and at:
https://support.industry.siemens.com/cs/ww/en/view/109759136

You can obtain technical support and advice from:

Siemens AG
Digital Factory

Stuttgart office
Competence Center Machine Tools

Fax: +49 711 137-2838
Email: info.mc-hmi-oa@siemens.com

*) Marketing and sales via Siemens regional company.

© Siemens 2022

Overview

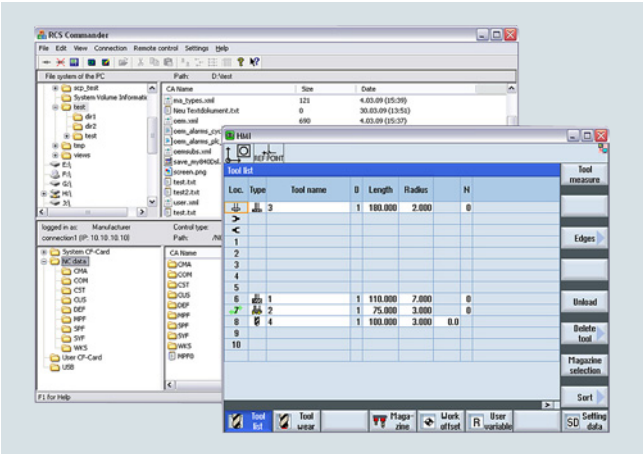

Commissioning support and remote diagnostics with SINUMERIK Operate

Access MyMachine /P2P supports the commissioning of machines with SINUMERIK Operate (software version 2.6 and higher) using a standard Windows PC. Its scope of functions includes the exchange of files between the service PC and the control, as well as operation of the HMI user interface. Easy-Screen texts, alarm texts, tool management texts and other texts are easy to edit.

In addition, the Access MyMachine /P2P software offers engineering features for CNC lock and the SINUMERIK OPC UA server.

The file exchange functionality permits access from the NCU to files stored on the CF card and to files in the CNC kernel. Various user profiles are also supported.

The file exchange only requires the Access MyMachine /P2P software. This is installed on the PC (direct access via X127 without a TS adapter does not require the Access MyMachine/P2P option).

If remote access, e.g. via modem, to the HMI user interface is required, the approved modem for this application is the TS Adapter IE (2 versions: analog and ISDN telecommunication networks, via the X127 service interface only).
Requires Access MyMachine /P2P option.

Benefits

Cost savings in service thanks to:

- Less frequent service calls for the machines
- More efficient deployment of on-site service personnel
- Better preparation of service calls

Machine availability is enhanced thanks to:

- Rapid online presence on site
- Rapid file transfer to and from the machine

Integration

The components can be connected via X127 (X120/X130 have not been released)

- Point-to-point connection in combination with TS Adapter IE (analog, ISDN modem)
- Ethernet in local networks (LAN)
- Internet (VPN), taking local IT security regulations (IT Policy) into account

Selection and ordering data

Description	Article No.	Product ID
Access MyMachine /P2P For SINUMERIK 840D sl Software option Languages: English, Chinese Simplified French, German, Italian, Spanish	**6FC5800-0AP30-0YB0**	**MCS3140**
Access MyMachine /P2P for PC/PG		
• Single license with DVD-ROM, current software version	**6FC5860-7YC00-0YA0**	**MCS31401**
• Single license with DVD-ROM, software version 4.7	**6FC5860-7YC44-0YA0**	**– *)**
Teleservice software With floating license Languages: English, French, German Italian, Spanish	**6ES7842-0CE00-0YE0**	**– *)**

*) Marketing and sales via Siemens regional company.

© Siemens 2022

Function

Remote control, monitoring and administration

- File transfer to CF card and CNC file system
- Connection is established following confirmation by the operator
- Status display on the operator panel
- Optional teleservice software:
  (requires Access MyMachine P2P option)
  Machine connections can be maintained centrally and access data administered via remote connections.

File functions

Access MyMachine /P2P allows simple file management on your PC and on the SINUMERIK control systems.

- Data transfer between SINUMERIK and PC, data transfer to CF card and CNC file system.
- Generation and restoration of images from the CF card of the CNC control for data backup purposes.
- Writing existing images to a CF card.
- Loading files directly to the control system and from the CNC control to the PC.

Support during commissioning

- Managing the CNC data of the CNC control.
- Files can be copied directly from the PC to the CNC, and from the CNC to the PC.
- Monitoring processes and remote control of the SINUMERIK via a remote control function.
- Saving of HMI screenshot on the PC.

Presentation of the CNC control and better support in the event of a fault

- Editing the following user files on the PC:
  - PLC alarm texts (oem_alarms_plc)
  - Cycle alarm texts (oem_alarms_cycles)
  - Part program messages (oem_partprogram_messages)
  - EasyScreen files
  - Tool management texts
  - EasyExtend files (oem_aggregate)
  - Maintenance planner files (oem_maintenance)
- Creating and loading a CNC control archive.
- Managing user files with the following options:
  - Creating a project OFFLINE.
  - Creating a project where the files are automatically copied from the CNC control.
  - Copying individual files with project dialog to the CNC control, or from the CNC control to the project.
  - Deleting user files with the project dialog on the CNC control.
- Support in creating customer-specific object models for the OPC UA server of the SINUMERIK
  - Reading out of current server object model
  - Conversion of a custom-made object model from standard OPC UA extensible markup language into the format required for importing into the control
- Support of CNC lock
  - Generation of new CNC lock file configurations

© Siemens 2022

Overview

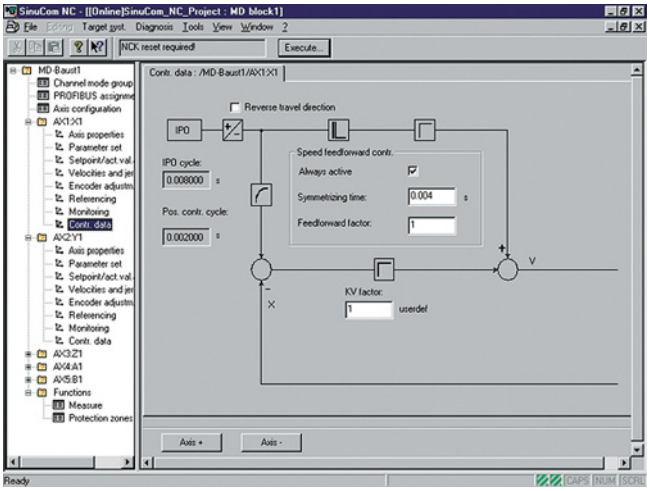

The SinuCom program package consists of:

- SinuCom NC
  - SinuCom NC Trace
  - SinuCom NC SI
- SinuCom FFS
- SinuCom CFS
- SinuCom ARC
- Commissioning software for SINAMICS S120

The SinuCom program package supports simple and effective commissioning of control systems. The programs provide comprehensive support to commissioning and service personnel of machine manufacturers for the following:

- Commissioning of the machine including utilization of the trace functionality, for the Safety Integrated acceptance test
- Creation of CompactFlash card images
- Administration of data for series start-up
- Transmission of CNC user data
- Know-how protection – guard technological knowledge against unauthorized access

Function

SinuCom NC

The SinuCom NC program facilitates commissioning of control systems by providing:

- Dialog-based parameterization of machine data
- Administration of data for series start-up
- Integrated online help for functions, machine data and alarms
- Functional description in German and English as PDF (part of the online help)

SinuCom NC Trace

The SinuCom NC Trace function permits the dynamic recording of CNC, PLC and HMI variables, and of drive signals that are available via the CNC. These variables can be displayed, printed out or stored in a file, similar to using an oscillograph or logic analyzer. The SinuCom NC Trace function helps with:

- Fault detection and fault correction
- Machine performance analysis, benchmarking and tuning
- Process performance analysis, benchmarking and tuning

SinuCom NC SI

The SinuCom NC SI function supports the machine manufacturer in automating the Safety Integrated acceptance test, and optimizes the process:

- Verification of machines according to the EC Machinery Directive
- Testing of safety functions (partly automated) during the machine acceptance
- Logging of measured data and test results incl. trace functions records
- Testing of single/special-purpose machines, machine components (as a partial test) and series machines as series start-up
- Shorter start-up times since, in the new acceptance mode, power-on alarms during the acceptance test are acknowledged by RESET
- Simple operation using prompted sequences
- Automatic configuration of the trace functions
- Unambiguous quality verification for original equipment manufacturers and customers, and for dealings with government agencies

© Siemens 2022

Function

SinuCom FFS

The SinuCom FFS program is used to generate an image for the PC card of the NCU of the SINUMERIK 840D sl. It contains:

- Processing of the Flash File System
- Preparing the image for programming the PC card
- Integrated help

The PC card is programmed using standard tools. These tools are not included in the scope of delivery of the SinuCom FFS.

SinuCom CFS

The SinuCom CFS program can be used to generate an image in Ext3 format for the CF card of the NCU of the SINUMERIK 840D sl. It contains:

- Preparing the image for programming the CF card
- Integrated help

When copying the software, make sure that you comply with the I DT software marketing guidelines.

SinuCom ARC

The SinuCom ARC program simplifies the processing of series start-up data:

- Reading, deleting, inserting and changing of data for series start-up
- Integrated help

Commissioning software for SINAMICS S120

The commissioning software for PCs/PGs enables optimized commissioning of drives with SINAMICS S120.

Integration

Product name	SINUMERIK 840D sl	SINUMERIK 828D	Windows 7 (32-bit/64-bit)
SinuCom NC • SinuCom NC Trace • SinuCom NC SI	✓	–	✓
SinuCom FFS	–	–	✓
SinuCom CFS	✓	–	✓
SinuCom ARC	✓	–	✓
Commissioning software for SINAMICS S120	✓	✓	✓

✓ = Possible
– = Not possible

Selection and ordering data

Description	Article No.	Product ID
SinuCom Commissioning/ service tools SinuCom NC (including SinuCom NC Trace and SinuCom NC SI) SinuCom FFS SinuCom CFS SinuCom ARC Languages: English, French, German, Italian, Spanish Documentation: English/German		
• Single license on DVD-ROM Current software version	**6FC5250-0AY00-0AG0**	– *)
• Single license on DVD-ROM Software version 7.7	**6FC5250-7AY00-7AG0**	– *)
• Update on DVD-ROM on order Software version 7.7	**6FC5250-7AY00-7AG3**	– *)

*) Marketing and sales via Siemens regional company.

© Siemens 2022

Overview

SinuTrain for SINUMERIK Operate is a PC-based CNC programming software package, based on the original CNC kernel.

SinuTrain for SINUMERIK Operate enables completely identical operator control and CNC programming as on SINUMERIK CNCs that are equipped with the graphical user interface SINUMERIK Operate.

Application

SinuTrain for SINUMERIK Operate can be used for the following applications:

In the work preparation

- Higher machine availability through work preparation on the CNC programming station and security through offline verification of the programs
- Operation and programming are identical 1:1 to that on the machine, so no new operating or programming knowledge is required.
- Enhanced productivity thanks to integrated program and tool management as on a real CNC, integration into the company network, and external data storage media, e.g. USB stick

In training

- Simple learning and professional training through preconfigured machines, and no additional hardware costs
- Learning as on the CNC, with additional tutorials and programming guides
- Perfectly tailored training packages[1)] directly from: www.siemens.com/sce

At the machine manufacturer

- Adaptation of SinuTrain to the specific machine
- The real machine and the machine-manufacturer-specific SinuTrain delivered together to the end users
- Another sales argument thanks to the CNC programming station supplied

For the presentation

- Present always and everywhere
- Live demonstration of (new) SINUMERIK functions instead of slides

Function

The SinuTrain offline programming station brings SINUMERIK Operate to the PC to create realistic conditions, including animated machine control panels. This facilitates the easy transition of know-how from a training situation into a practical environment. This powerful tool enables practice-oriented offline programming on the PC based on the DIN 66025 programming language, the ShopMill and ShopTurn options, type SINUMERIK 828D and 840D sl commands, and the direct transfer of CNC programs to the CNC. Using SINUMERIK Operate and the original SINUMERIK CNC kernel, all operating and programming operations can be used and CNC programs executed.

Integration

SinuTrain for SINUMERIK Operate Version 4.93 is based on SINUMERIK 840D sl CNC software with software version 4.93, and can be used for:

- SINUMERIK 840D sl
- SINUMERIK 828D (see Compatibility)

Requirements:

Hardware:

- PC with 2 GHz processor
- RAM: 4 GB of free memory space
- Hard disk:
  - 1.2 GB of free memory space for the minimum installation in English
  - 3.3 GB of free memory space for the complete installation in all languages
- DVD drive for installation from DVD-ROM

Software:

- Operating system
  - Windows 10
    (64-bit - Mobile and Mobile Enterprise are not supported)
- Adobe Acrobat Reader

[1)] For schools and universities only, not for in-house vocational training departments.

© Siemens 2022

Selection and ordering data

Description	Article No.	Product ID
SinuTrain for SINUMERIK Operate		
Version 4.93		
SINUMERIK 840D sl with CNC software 4.93		
• Single-user license	**6FC5870-4YC46-0YA0**	**MCS5320**
• Multi-user/ classroom license (18)	**6FC5870-8YC46-0YA0**	**MCS5330**
• Basic version	**6FC5870-0YC46-0YA0**	**– *)**
Machine adaptation for SinuTrain for SINUMERIK Operate		
• Machine adaptation by Siemens[1)]	**6FC5088-4AA22-4AB1**	**– *)**
• Importing the start-up archive (option)	**6FC5870-0CC46-0YA0**	**MCS5340**
Training packages[2)]		
• Trainer package 6 × single-user licenses 40 × student licenses	**6FC5870-1TC46-0YA0**	**MCS5370**
• Trainer package XL 1 × classroom license (18) 40 × student licenses	**6FC5870-2TC46-0YA0**	**MCS5380**
• 300-h student license	**6FC5870-1YC46-0YA0**	**MCS5350**
• Student package 20 × 300-h student licenses	**6FC5870-1SC46-0YA0**	**MCS5360**

More information

The basic version of SinuTrain for SINUMERIK Operate is available for download on the internet.

You can find additional information on the internet at:

www.siemens.com/sinutrain-downloads

*) Marketing and sales via Siemens regional company.

1) Services for machine adaptation:
You provide a complete file for CNC series commissioning archive by email
You will then receive a file for importing into SinuTrain by email.
For more information, please contact your local Siemens sales office or Regional Company.

2) For schools and universities only, not for in-house vocational training departments, at: www.siemens.com/sce

© Siemens 2022

Overview

The SIMATIC STEP 7 software for service functions can be used to read status and service displays of the CPU via the PLC program without the need for an additional programming device, and to integrate new modules.

The software is designed for service functions. The conditions of the SINUMERIK supply contract apply.

Existing service packs for SIMATIC STEP 7 are released separately for STEP 7 on SINUMERIK PCU.

Integration

SIMATIC STEP 7 V5.5 SP4 can be used on the SINUMERIK PCU.

Requirements:

- Mouse and PC keyboard
- SINUMERIK PCU

Selection and ordering data

Description	Article No.	Product ID
SIMATIC STEP 7 for SINUMERIK hardware		
• Single license Without data storage medium	**6FC5252-0AY00-0AG1**	**MCS1070**
• Single license on CD ROM Current software version	**6FC5252-0AY00-0AG0**	**– *)**
• Single license on DVD-ROM Software version 5.6	**6FC5252-5AY01-6AG0**	**– *)**

*) Marketing and sales via Siemens regional company.

© Siemens 2022

Overview

CNC Shopfloor Management Software – Ecosystem

A leading-edge IT architecture is created based on the CNC Shopfloor Management Software – and more specifically – at three levels **In Cloud**, **In Line** and **In Machine**. These levels correspond to the three platforms – MindSphere, SINUMERIK Integrate and SINUMERIK/SINUMERIK Edge with many customized functions that extend from the field up into the Cloud.

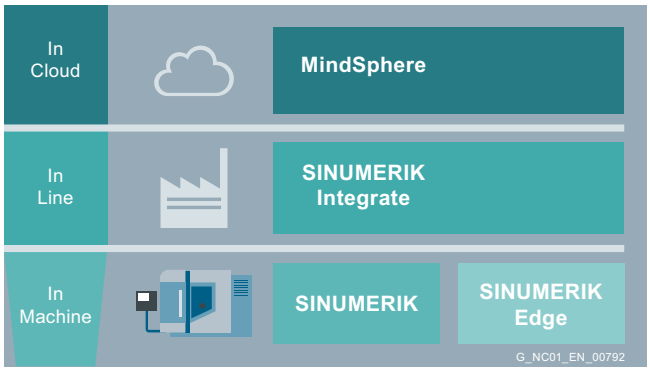

MindSphere – The solution for the Internet of Things (IoT)

MindSphere is the cloud-based, open IoT operating system from Siemens that connects your products, plants, systems, and machines, enabling you to harness the wealth of data generated by the Internet of Things (IoT) with advanced analytics.

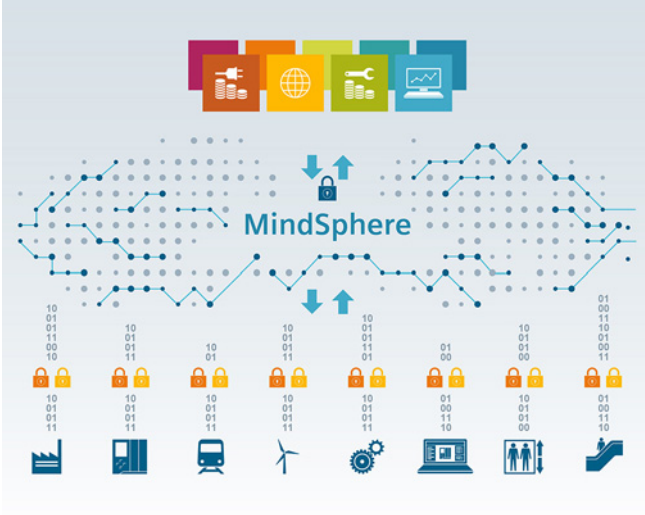

Open IoT operating system

MindSphere delivers a wide range of device and enterprise system connectivity protocol options, industry applications, advanced analytics and an innovative development environment that utilizes both Siemens' open Platform-as-a-Service (PaaS) capabilities along with access to Amazon Web Services (AWS) public cloud services.

Through these capabilities, MindSphere connects real things to the digital world and provides powerful industry applications and digital services to help drive business success.

MindSphere's open PaaS capabilities enable a rich partner ecosystem to develop and deliver industry applications. Benefit from the experience and insight of our partners. Promotion of your IoT strategy requires no development on your part.

Siemens provides business-focused solutions to help drive closed-loop innovation through digital twins for products, production, and performance.

More information

You can find additional information about MindSphere on the internet at:

www.plm.automation.siemens.com/global/en/products/mindsphere/

Information about the applications can be found in the MindSphere Store:

www.dex.siemens.com/?selected=mindsphere

© Siemens 2022

Overview

The Manage MyMachines MindSphere App visualizes numerous operating and plant-specific data of machine tools or individual machine components for production, as well as service and maintenance. This increases the transparency of the machine tools connected in MindSphere.

The following functions are possible:

- Management and representation of globally distributed machines
- Visualization of relevant information on an overview page
- Intuitive creation of rules and queries
- Simple installation through integrated SINUMERIK Integrate client
- Option of combining critical machine data for a meaningful analysis
- Creation of your own digital service portfolio based on the MindApp

Benefits

The Manage MyMachines MindSphere App visualizes the transferred data and offers the following:

- Overview of the operating data of any asset
- Display/logging of previously defined machine events
- Export of data points of any aspect
- Creation and changing of rules
- Analyses based on defined user aspects and critical machine data
- Information display showing the number of created assets
- Filtering and display of alarms

Selection and ordering data

Description	Product ID
Manage MyMachines	
• Single license Without data storage medium	**MSMCMMM**

More information

You can find additional information on Manage MyMachines on the internet at:

www.siemens.com/manage-mymachines

www.dex.siemens.com/mindsphere/applications/Manage-MyMachines

© Siemens 2022

Overview

Manage MyMachines /Remote facilitates the fail-safe remote operation/remote monitoring of machine tools. In an emergency situation, service personnel have access to a wide range of functions for fault diagnostics and troubleshooting. All internet connections to and from the machine tools are encrypted.

The following functions are possible:

- Full remote control of the interface
- Data exchange (files, reference documentation, etc.)
- Fail-safe, encrypted internet communication via HTTPS and TLS - Transport Layer Security
- Automatic documentation of maintenance sessions is stored in MindSphere
- Creation of tailor-made OEM service and maintenance quotations
- Application based on Siemens MindSphere

Benefits

The Manage MyMachines /Remote Mindsphere application enables faster problem solving and higher machine availability:

- Machine availability is improved because specialists can perform maintenance quickly through remote access
- Substantial savings per support case/malfunction
- Measures performed are verified and traceable
- Decisive competitive advantages based on outstanding service
- Seamless integration with SINUMERIK
- Open platform

Selection and ordering data

Description	Product ID
Manage MyMachines /Remote	
• Single license without data storage medium	**MSMCMMM-R**

More information

You can find additional information on Manage MyMachines /Remote on the internet at:

www.dex.siemens.com/mindsphere/applications/Manage-MyMachines-Remote

© Siemens 2022

Overview

Manage MyMachines /Spindle Monitor is an extension of the cloud application Manage MyMachines to display specific data of main spindles. This requires the SMI24 spindle sensor module on the main spindle. This allows information on speed distribution, torque distribution, temperature distribution and tool clamping times to be recorded and stored in the cloud application. The user-friendly dashboard allows visualization and analysis of the data.

The following functions are possible:

- Dashboard displays the information on the master data of the connected main spindle
- Statistics for operating points speed/torque/temperature
- Statistics on tool clamping times
- Statistics on the clamping condition
- Selection and comparison of statistical data at different points in time
- Export of saved data in a standard CSV format

Benefits

The Manage MyMachines /Spindle Monitor MindSphere application provides transparency about the current status of your machine:

- Time-efficient access to required information in case of maintenance or service
- Information on possible power reserves and suitability of the design
- Evaluation of the clamping times in comparison to the reference/design value
- Recognition of changes in use
- Detection of wear of the clamping system through change of the clamping times
- Management and monitoring of globally distributed machine parks
- New service methods and business models

Selection and ordering data

Description	Product ID
Manage MyMachines /Spindle Monitor	
Single license without data storage medium • Additionally, a valid subscription for the application Manage MyMachines (MSMCMMM) is required	**MSMCMMM-S**

More information

You can find additional information on Manage MyMachines /Spindle Monitor on the internet at:

www.dex.siemens.com/mindsphere/applications/Manage-MyMachines-Spindle-Monitor

© Siemens 2022

Overview

SINUMERIK Integrate platform (In Line)

	SINUMERIK Integrate platform
Manage CNC programs	Manage MyPrograms
Manage tools	Manage MyTools
Boost manufacturing productivity	Analyze MyPerformance
Record machine states	Analyze MyCondition
Perform remote maintenance	Access MyMachine
Enable data access	Access MyData
Enable data access	Create MyInterface
Archive machine data	Access MyBackup

Note:
Access MyBackup is an interface for Product Partner SINUMERIK systems, enabling them to offer their own products in the field of archiving systems on this basis. The certified SINUMERIK System Product Partners are the companies Auvesy and MDT Software.

More efficient production through intelligent IT integration

Siemens makes the complete range of IT integration available as an expansion of its CNC technology SINUMERIK 840D sl. This increases productivity in service and production, and expands the automation of the production. Machines communicate with higher-level control systems, and simply have to be expanded by new functionality. On the way toward the digital factory, the SINUMERIK Integrate platform offers productive solutions for integrating IT into production facilities.

There is potential for increasing the productivity of CNC manufacture by networking machines and plants. This requires production data to be collected and evaluated transparently. Siemens offers SINUMERIK Integrate as a central platform, that provides useful modules for analyzing and managing data for individual machines and networked plants.

Future-proof investment in scalable software

Investment protection and future security with SINUMERIK Integrate

A typical production environment lasts for several years or even decades. In this time, the IT infrastructure is subject to continual change, whereas the machines remain virtually unchanged. At the same time, new requirements frequently arise, that can be met by expanding the software functionality – if possible without changing the machine-related software. The SINUMERIK Integrate platform enables resources to be networked and processes and production data to be centralized. The security of the data is ensured from end to end. On the one hand by encrypted data transport and, on the other hand, because the machines can be operated with completely isolated firewalls.

Scalable stand-alone and client-server solutions

The SINUMERIK Integrate platform is a client-server solution that is typically used in the environment of a local or decentralized machine park. Individual SINUMERIK Integrate applications can also be used as local solutions in the environment of a single machine. After installation, SINUMERIK controlled machines can be easily integrated as clients in an IT network on the Integrate Server with the user interfaces HMI Advanced or SINUMERIK Operate. The entire software package comes from a single source, individual applications are activated by a simple installation and licensing procedure. The system is thus easily scalable.

The link to company level

The SINUMERIK Integrate platform enables machine tools to be easily networked into higher-level IT systems for production. The software runs directly on the CNC, records all the data from the CNC and PLC, and makes it available for further use.

If the machines are connected to the server, new functions can be easily copied onto them. This is where the standardization of the Siemens portfolio pays off, as PLM and MES systems can be easily connected to increase productivity still further. This ensures cost advantages in both procurement and operation.

A platform with many advantages

SINUMERIK Integrate is a central platform with which the productivity of the end user or the service of machine manufacturers can be increased, and the production automation expanded. Optimizing the production enables, on the one hand, more parts to be produced and, on the other hand, errors, such as missing tools, incorrect CNC programs, as well as high energy consumption, and material and tool inventories to be reduced.

© Siemens 2022

Overview

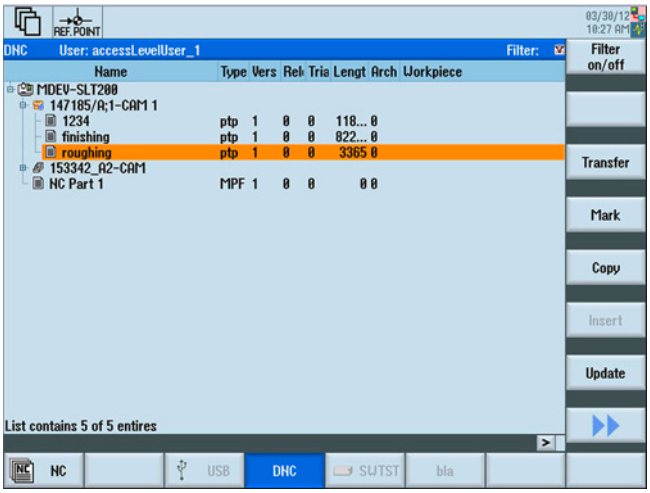

Manage MyPrograms provides a powerful client-server software platform for the efficient network-wide organization, management and transfer of CNC programs.

As a result of the convenience of managing and archiving CNC programs electronically, the latest CNC program versions are always available to the machines throughout the entire production area. This is particularly relevant in production areas with a high degree of flexibility and variation and where CNC data frequently changes, for example in machining centers, special machines and flexible production lines.

Benefits

- Costs of CNC data organization are reduced:
  - Convenient, central CNC program management which provides access to CNC programs and attachments, e.g. PDFs and images
  - Low organization overhead and simple handling eliminate the need for external data storage mediums for archiving CNC data
- Fast, secure program transfer from and to the machine initiated on the machine or the server
- Increase in machine operating times and reduction in setup times through fast, reliable supply of CNC programs
- Cost-effective and reliable electronic data archiving
- Simple integration of many different types and generations of CNCs
- Convenient CNC program import and export functions to/from Manage MyPrograms

Selection and ordering data

Description	Article No.	Product ID
Manage MyPrograms		
• Machine Connect Single license for each machine		
- Current software version	**6FC5864-1AP00-0YB0**	**MCS5010**

Integration

Manage MyPrograms permits central management and distribution of CNC program data in machine parks with different CNC types.

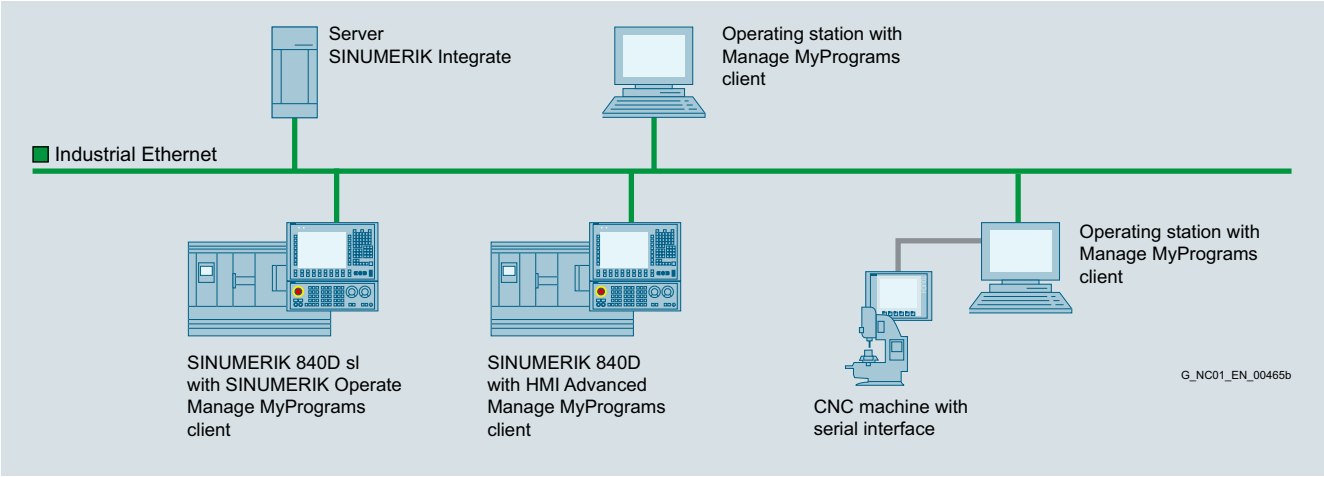

© Siemens 2022

Overview

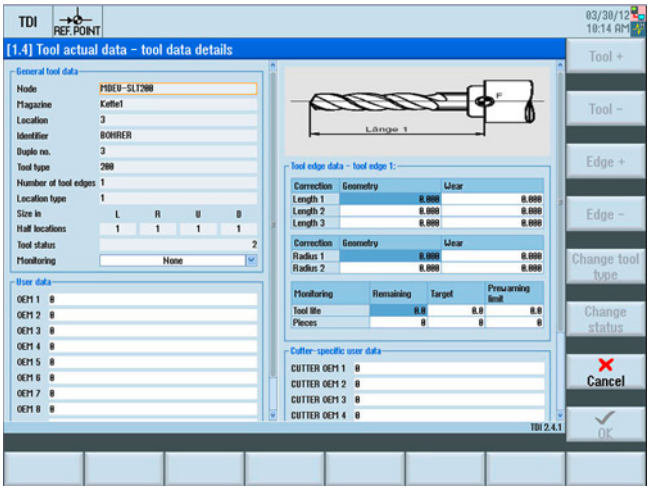

Network-wide tool management

Manage MyTools offers an integrated software solution for tool cycle management from adjustment, through tool storage, to the machine.

This ensures that machine downtime due to missing tools is reduced through preventive tool planning. Clock times and downtimes with regard to tools are optimized.

Tool organization across the entire production area is one of the central tasks of CNC production. Requirements are:

- Smooth processes within tool cycles
- Cost transparency
- Inventory and cost overview

Manage MyTools makes this potential for rationalization transparent and provides functions that help attain the potential savings identified. Manage MyTools has the correct connection concepts and functions for a complete overview of the tools used and for a closed tool data circulation in the production for:

- Single machines, flexible transfer lines, or a complete machine park
- Highly automated SINUMERIK CNCs
- Integration of tool setting stations or cross-factory tool management systems.

Benefits

- Cost transparency in the tool cycle
- Detailed inventory overview, cost overview and productivity potentials in tool management
- The modularity of the Manage MyTools modules permits optimized customer and demand-oriented use.
- Use scalable from a single machine up to a complete machine park.

Selection and ordering data

Description	Article No.	Product ID
Manage MyTools		
• Machine Connect Single license for each machine		
- Current software version	**6FC5864-2AP00-0YB0**	**MCS5020**

Function

All Manage MyTools functions are designed such that they can operate both on a single machine or within networked, interconnected systems, e.g. they can display an overview of all actual tool data on a single machine or a central control system.

Scope of functions of single, non-networked machines

- Actual tool data
- Service life can be varied from 10 to 100%
- Block tool and tool details
- Import/export file interface
- Tool transfer

Thanks to the consistent design as a client-server solution and the use of communication mechanisms, it is possible to vary the distribution of the modules in the network and to access them from any position. This means that up-to-date information can always be accessed wherever it is needed.

The following functions are available:

- Availability of actual tool data throughout the network
- Operator-prompted loading and unloading with TO data import from the tool setting station
- Planning of tool demand based on current magazine assignment
- Statistical evaluations of tool use
- Interface for connecting external management systems
- All available functions combined on a single server and network-wide operation of client-based interfaces
- Stand-alone non-network-compatible function package for tool planning and connection to tool setting stations

© Siemens 2022

Integration

Requirements:

- It is assumed that the standard tool management option is installed in the SINUMERIK CNCs. SINUMERIK CNCs without standard tool management or with tool management that is specific to the machine manufacturer must be connected for the specific project.
- In the case of third-party control systems, the manageable tool data is reduced to a simplified tool data structure. The basic requirements are that the control panel must be Windows-based, the CNC must be accessible via Ethernet, and the interface must be OPC-compatible. Third-party controls are connected for the specific project.
- If tools stored in tool cabinets are to be recorded and managed, a user interface for loading and unloading the tools must be assigned to the respective storage location, e.g. a Windows PC integrated in the network.

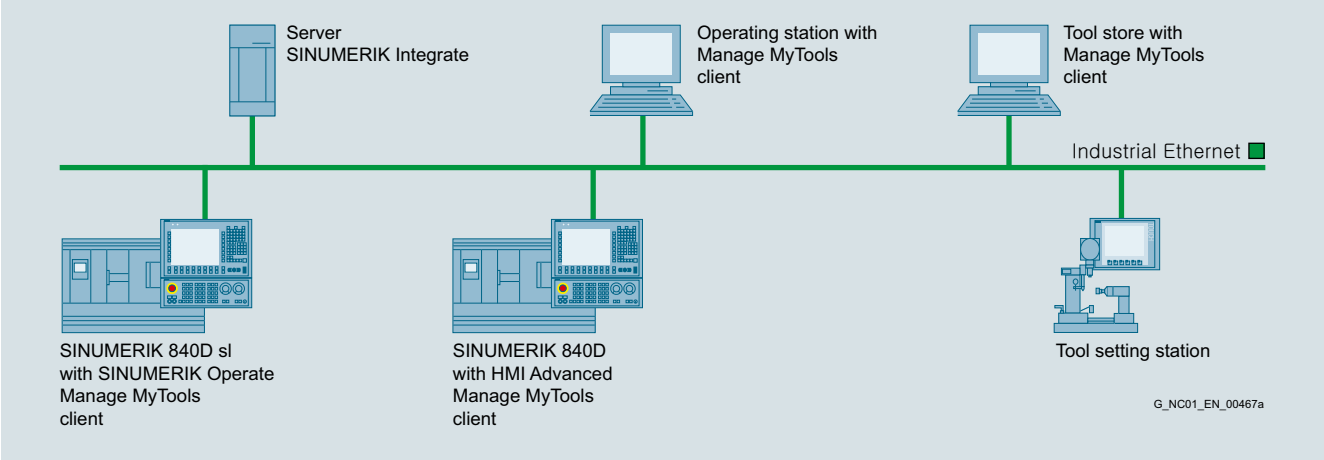

© Siemens 2022

Overview

Analyze MyCondition provides test cycles for equability, circularity and universal axes, and also offers functionality for individual acquisition of CNC data.

It also supports the reporting of parameters about wear of mechatronic components. By employing a condition-oriented maintenance routine, you will keep your machines running longer as well as reduce downtimes and outages.

By means of standardized test procedures, Analyze MyCondition helps machine operators, maintenance technicians and service engineers to determine the machine condition and monitor the wear on the machine over time. Through continuous evaluation of the condition of the machine tools, trends can be detected early and measures can be taken and planned at the right time. Individual machine components can also be monitored statically and dynamically.

Benefits

- Designing and optimizing the maintenance measures for your machine
- Early spare parts disposition through status monitoring and analysis of machine components
- Provision of a planning service for your customers for preventative or condition-oriented maintenance measures

Function

Installation

Siemens is responsible for operating the server

Siemens manages the complete infrastructure for Analyze MyCondition as well as the server. This means that Analyze MyCondition facilitates secure, global access via the internet to the data of machine tools automated with SINUMERIK.

Technical implementation of access to the internet depends on the local conditions at the machine and can be implemented in different ways. The main requirement is a data transmission rate of at least 64 kbit/s. Depending on the available data transmission rate, some functions may not be executed very quickly or are only available with restrictions.

Integration

Requirement:

- SINUMERIK 840D sl with SINUMERIK Operate

Selection and ordering data

Description	Article No.	Product ID
Analyze MyCondition /Local		
• Machine Connect Single license for each machine		
- Current software version	**6FC5864-7LP00-0YB0**	**MCS2013**
- Software version 4.1	**6FC5864-7LP41-0YB0**	**– *)**
• Server Access Software Update Service per year	**6FC5864-7LP00-0YM0**	**Maintenance package**

*) Marketing and sales via Siemens regional company.

© Siemens 2022

Overview

Modern interfaces for comprehensive data access

The open, versatile Access MyData software interface enables the easy exchange of data between SINUMERIK Integrate platform applications and higher-level or supplementary software systems.

Benefits

There is an increasing number of productivity-boosting solutions based on IT networking of CNC machines and plants in the machining production environment. Integrating these solutions requires modern interfaces, that allow comprehensive access to data as required, either directly to the CNC and PLC data, or to preprocessed data that supports clearly delimited functions.

Function

Access MyData offers an open interface function enabling smooth access to data on machine tools controlled by SINUMERIK 840D sl. Different versions supplement the SINUMERIK Integrate software platform. Access MyData plays a special role here: Contrary to other applications that directly expand the CNC functions, Access MyData as a component of the Integrate server consistently opens up the SINUMERIK product family.

CNC and PLC data can be read and written directly in the AMD Basic version, which is free of charge. This allows information to be exchanged with the main control room software and all types of computers, as well as a dynamic machine connection to any PLM, ERP or MES system.

The billable versions, Access MyData - MMT and Access MyData - MMP, also offer specialized interfaces for accessing tool data (Manage MyTools) and transferring part programs (Manage MyPrograms).

Integration

The installation of a SINUMERIK Integrate server, and the connection of the relevant machines to the server are general prerequisites. There are no other requirements for the use of the free AMD Basic version.

Other requirements:

- Each machine requires not only a license to use Access MyData - MMP but also a license for Manage MyPrograms (MMP).
- Each machine requires not only a license to use Access MyData - MMT but also a license for Manage MyTools (MMT).

Selection and ordering data

Description	Article No.	Product ID
Access MyData		
• Machine Connect Single license for each machine		
- Current software version	**6FC5864-0DP00-0YB0**	**MCS3010**
- Software version 4.1	**6FC5864-0DP41-0YB0**	**MCS3010**

© Siemens 2022

Overview

The Create MyInterface software is used to integrate SINUMERIK CNCs into a customer's production network. All essential machine data (such as status information, piece counts, alarms, messages, CNC programs, tool service life) can be exchanged via Create MyInterface between a central control system and the CNC.

Benefits

- Simple integration of the CNC with customer/project applications through a defined Ethernet/TCP-IP-based interface
- Simple configuration of the data to be transferred on the PLC
- Create MyInterface as a tool that can be used to implement measures designed to boost productivity:
  - Machine capacity utilization improved by production control
  - Machine downtimes reduced by transmission of maintenance data
- Simple application by using standard hardware/software components from the PC world
  - Networking hardware/software (Ethernet cards, TCP-IP)
  - Familiarization
  - Commissioning, maintenance

Function

- Defined, opened communications interface for exchanging essential data of the SINUMERIK CNC
- Data transmission can be initiated by the host computer and/or by the SINUMERIK CNC
- The host application is created by the user in the Create MyInterface environment (interfaces, examples)
- The following data can be exchanged:
  - CNC programs, tool data
  - Machine status data
  - Messages
  - Production dialog data
  - Mode switchover, synchronization
  - Transport jobs
  - Configurable data from PLC or CNC

Even without its own user interface, Create MyInterface can run with additional languages, e.g. Korean, Russian, Simplified Chinese.

Integration

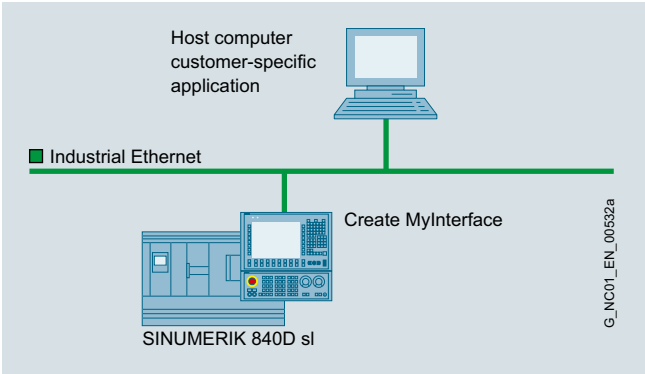

Create MyInterface cannot run by itself in a given systems environment. A specific application created by the customer (not included in Create MyInterface) is always required on the host computer side.

Requirements:

- SINUMERIK 840D sl with maximum of 4 NCUs
- SINUMERIK PCU
- Manage MyTools for computer-controlled loading and unloading of tools

Selection and ordering data

Description	Article No.	Product ID
Create MyInterface Communication software for connecting a host computer to SINUMERIK 840D sl and SINUMERIK Operate Languages: English, German		
• Machine Connect Single license for each machine	**6FC6000-7NF02-6YB0**	**MCS3030**

© Siemens 2022

Overview

Access MyBackup is an interface which enables a Product Partner SINUMERIK Systems to offer their own products in the field of archiving systems on this basis. The companies Auvesy and MDT Software are certified as Product Partner SINUMERIK Systems.

Selection and ordering data

Description	Article No.	Product ID
Access MyBackup Interface for backing up data • Machine Connect Single license for each machine	**6FC5864-8AP00-0YB0**	**MCS3060**

Integration

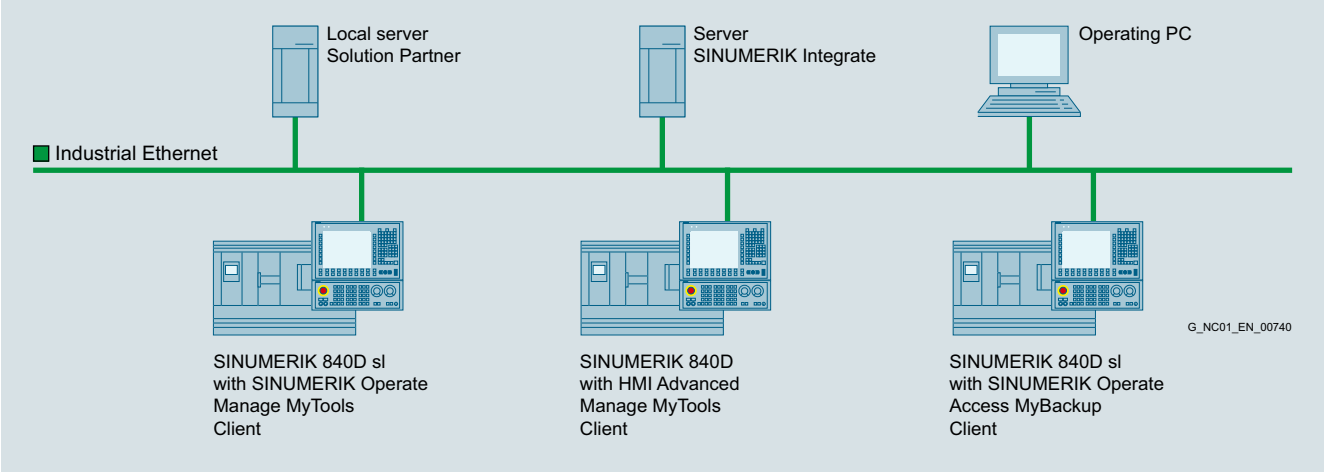

Requirement:

- SINUMERIK 840D sl with SINUMERIK Operate

© Siemens 2022

Overview

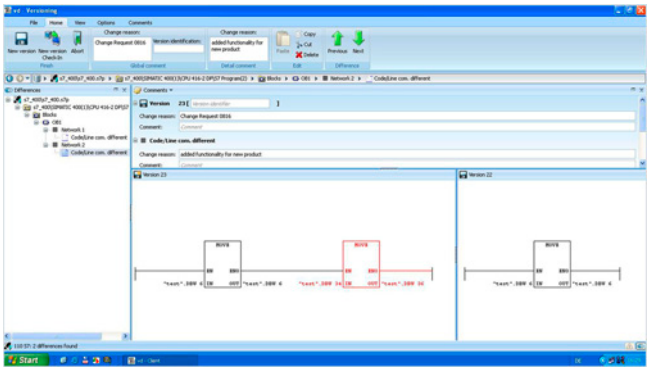

versiondog

versiondog is the enterprise solution developed by market leader AUVESY for an integrated software and data management system in the automated production industry. versiondog creates versions and automatic backups to save and manage your planning data. Thanks to its vendor neutrality, the system provides the most comprehensive depth of integration and the largest range of supported devices and editors.

With the SINUMERIK 840D sl integration, versiondog is offering a Siemens-certified method for the automated generation of ARC archives. This system makes it especially easy to trace changes and to produce a reliable backup when needed for disaster recovery.

Benefits

- 100 % traceability – the change factors WHO, WHAT, WHERE and WHEN are stored automatically
- Automatic storage of data saves time and ensures availability of data
- Fast restoration of optimized project versions
- Shorter downtimes and prevention of outages and waste
- Detailed project handover for external companies
- Change history is documented in electronic form for audits and QM processes

Integration

versiondog can be used for the following CNC:

- SINUMERIK 840D sl

Function

- Version checks and versioning of revised software releases are made easy by backing up software versions. versiondog offers support by providing a menu-assisted documentation process. This solution saves an immense amount of time and makes the daily working routine so much easier.
- versiondog provides configurable archiving functions for PLC, CNC and compensation data, compile cycles, HMI data, drive data and data from CompactFlash cards. The system also provides a tool for converting a PLC series commissioning file into a SIMATIC S7 project.
- versiondog supports simultaneous archiving of multiple control systems and allows control data from these systems to be archived while they are in operation. Monitoring of consistency conditions during archiving is available as an option. versiondog also offers a data backup strategy for 24-7 production processes.
- Any versions selected by the user can be compared with one another at the push of a button (SmartCompare) so that errors can be located or analyzed quickly. Furthermore, a detailed comparison of the SIMATIC S7 project with differences represented in graphic, tabulated or text form is available in versiondog. Changes to a new production data record are also presented clearly. It is then, for example, easy to trace directly all the modifications made by a colleague.
- Automatic backup jobs show each change made to the last valid version and make it easy to distinguish between desirable and undesirable modifications at a glance. This solution is extremely reliable by comparison with other systems which involve internal or even external modification of production-relevant data records.
- A history that includes all changes to a production plant can be called at any time so that the parameter records pertaining to a particular production cycle are easy to track. Detailed documentation of this change history can be generated at any time at the push of a button.
- The availability of all versions means that any project status can be restored quickly and conveniently after a system failure (disaster recovery).

More information

AUVESY GmbH
Sales

Fichtenstraße 38 B
76829 LANDAU IN DER PFALZ
GERMANY

Tel.: +49 6341 6810 440
Email: info@auvesy.de
Internet: www.auvesy.de

© Siemens 2022

Overview

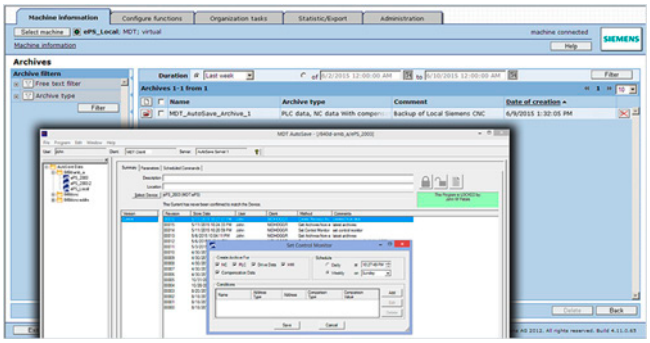

MDT – AutoSave Automation Change Management

With its wide range of functions, MDT AutoSave provides the most advanced change management for automation programs across the industry. AutoSave offers advanced version control, automatic backup and recovery, cybersecurity functions and program comparison functions for a comprehensive range of devices and editors, e.g. for the following Siemens products:

- SINUMERIK 840D sl CNC
- PCS 7
- STEP 7
- STEP 7 Professional
- STEP 7 TIA Portal
- STEP 7 Multi-project
- STEP 5*
- WinCC in the TIA Portal
- WinCC
- WinCC Flexible
- SICAM A8000 RTU
- Siemens Scalance Switch 200/400

Benefits

- Withdrawal of incorrect changes and restore program data within seconds
- Recover quickly if a program is lost (device failure, power failure, etc.)
- Automatically retrieve the most current copy of the device program
- Validate the program running in the processor matches the reference program you designate This allows changes to be detected that may have been unknown or unauthorized to protect people, processes and equipment
- Prepare, detect and recover from cybersecurity threats to networked devices
- View program activity through a web interface, on workstations, laptops and mobile devices

Integration

AutoSave can be used for the following CNC:

- SINUMERIK 840D sl

Function

- Centralized version control maintains accurate records of which software version is in use, when changes were made and who made the changes.
- A designated number of previous program copies is retained. When a change is made, a new current copy is saved by MDT AutoSave and the oldest copy is marked for later deletion.
- If necessary, the recovery of defective devices is possible by accessing the respective original versions or other versions.
- Communication parameters are stored on the server for quick retrieval of the correct program.
- The system can be set to periodically check for differences between the device and the current copy of a program stored in AutoSave. If deviations are detected, AutoSave sends a comparison report with a detailed list of difference to a pre-selected user.
- Only authorized users are able to access programs and make changes. Access is controlled by logins and passwords, which authenticate privileges according to the user's group (e.g., maintenance, engineering).
- AutoSave utilizes module extensions to the server that interact directly and uniquely with each 3rd party programming application. This provides a superior level of change control to other products on the market without the need to edit scripts with each new release of 3rd party software.
- Non-networked devices are supported by a check-out and check-in procedure enabling program copies to be downloaded from the central repository to the controls engineer's laptop for access remotely to assist in creating new programs in the field and comparing program versions. The non-network tools are then used to synchronize all changes back to the repository.

More information

MDT Software

3480 Preston Ridge Road
ALPHARETTA, GA 30005
USA

Tel.: +1 678 297 1000
Email: sales@mdt-software.com
Internet: www.mdt-software.com

© Siemens 2022

Overview

Siemens Industrial Edge – Expansion of the field level to include the benefits of the cloud

Siemens Industrial Edge is a digitalization platform that extends the automation devices to include machine-level data processing, bringing highly developed analytical technology and the intelligence of edge computing safely to the production area.

Siemens Industrial Edge enables users, depending on their individual requirements, to close the gaps between conventional local data processing and cloud-based data processing.

Edge computing enables large volumes of data to be processed locally. A wide range of applications are available to users for this purpose, including data processing, data visualization via web server, data transmission into the cloud or IT infrastructure, as well as rapid innovation cycles for app development. In addition, memory and transmission costs are reduced for users, as large volumes of data are pre-processed and only relevant data is forwarded to the cloud or IT infrastructure.

Siemens Industrial Edge includes the Edge Management System, Edge devices and Edge apps. With the Edge Management System, all connected Edge devices can be controlled and their statuses monitored centrally.

SINUMERIK Edge

SINUMERIK Edge offers the first Edge applications specially designed for machine tools. SINUMERIK Edge is a machine-oriented platform for software applications, which records, pre-processes and analyzes high-frequency data. In addition, complex tool paths can then be computed and non-productive time or workroom monitoring optimized. The operating system and Industrial Edge application for SINUMERIK are installed via MindSphere backend services and continuously updated. Industrial Edge for SINUMERIK thus enables users to enjoy continuously stable process and status monitoring and markedly higher productivity.

Overview

Optimize MyMachining /Trochoidal is the Edge application for trochoidal milling.

Optimize MyMachining /Trochoidal offers users updates for the existing NC program, optimized machining processes and sustainability for retrofit applications with dynamic machine data and corresponding data inputs. This results in less tool wear and improved service life of machines, thus lowering total stock costs. This in turn increases machine availability and leads to considerable productivity gains.

Optimize MyMachining /Trochoidal is particularly suitable for use with older machines, since it considerably reduces mechanical wear in the machine.

Selection and ordering data

Description	Article No.	Product ID
Optimize MyMachining /Trochoidal Edge application for trochoidal milling	**6FC6250-2LE00-0YB0**	**MCS2250**

© Siemens 2022

Overview

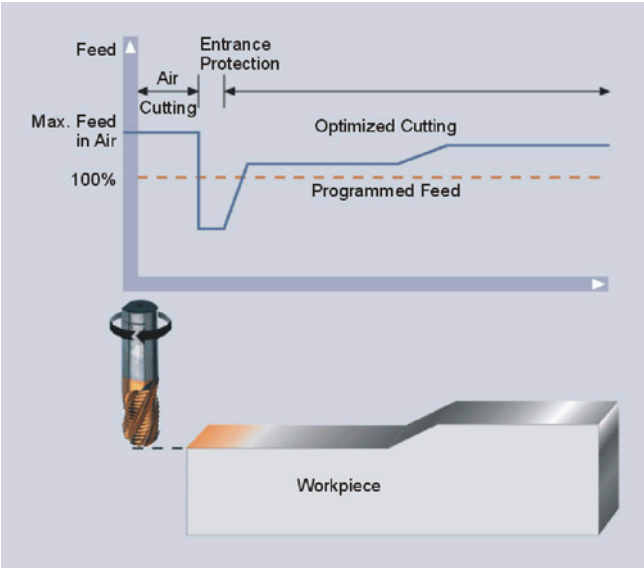

CNC machines operate at constant pre-programmed feed rates for each operation, even though cutting conditions may vary considerably during machining for the following reasons:

- Cutting depths and widths may vary – especially in roughing operations
- Tool sharpness decreases during machining due to tool wear
- Material hardness varies within each workpiece
- Workpiece surface is often not even, whether the blank is a bar stock, forging, or casting
- Material hardness and blank dimensions vary from piece to piece and even more so from batch to batch
- Chip accumulation may occur – especially in drilling
- Cooling qualities vary during machining
- Fixture stability may be adversely affected by dynamically varying forces

CNC machines do not have the flexibility to adapt to the dynamic changes that occur during cutting. Adaptive Control and Monitoring (ACM) technology provides the solution to this limitation. ACM systems monitor actual cutting conditions in real-time and automatically adjust the feedrate to its highest feasible level during each operation, and if necessary, they stop the machine in case of overload conditions or tool breakage.

Benefits

The following are the main Adaptive Control and Monitoring benefits:

- Increased machine productivity due to significant reduction in cycle time
- Optimized tool life and increased tool utilization
- Higher part quality due to constant load
- No need for offline NC program optimization, manual feed adjustment, or manual and visual tool inspection

Design

Adaptive Control and Monitoring for Siemens consists of two main components:

- Real time component: uses the IMD compile cycle to access the necessary data
- HMI component: runs on SINUMERIK Operate, based on Run MyHMI /3GL

Function

- Real-time feed optimization
- Tool breakage protection
- Spindle drive protection
- Automatic feed adjustment for tool wear compensation
- Tool wear monitoring
- Tool breakage detection
- Tool overload detection
- Tool life extension
- Coolant flow monitoring
- Process recording and visualization
- Advanced holemaking

Integration

ACM for Siemens can be used for the following CNC:

- SINUMERIK 840D sl with SINUMERIK Operate

Selection and ordering data

Description	Article No.	Product ID
Adaptive Control and Monitoring (ACM for Siemens)	**6FC6540-1HP00-0YB0**	**MCS2200**
Requirements:		
Run MyCC /IMD	6FC5800-0AN13-0YB0	**MCS3130**
Run MyHMI /3GL	6FC5800-0AP60-0YB0	**MCS1110**

© Siemens 2022

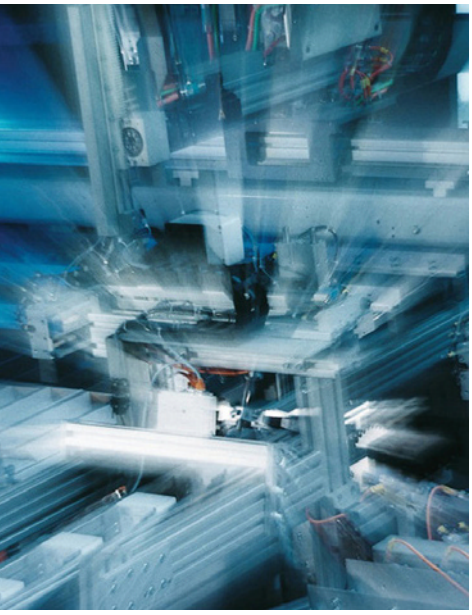

5/2 Introduction
5/2 SINAMICS S120 drive system
5/11 System data

5/12 Communication
5/12 PROFIBUS
5/14 PROFINET

5/16 Engineering software
5/16 SIZER for Siemens Drives engineering tool
5/17 STARTER commissioning tool

5/19 Control Units
5/20 CU310-2 Control Units for single-axis drives
5/20 CompactFlash card for CU310-2
5/24 CU320-2 Control Units
5/24 CompactFlash card for CU320-2

5/27 Booksize format
5/27 Line Modules
5/27 Smart Line Modules
5/31 Line reactors
5/32 Line filters
5/33 Recommended line-side components
5/34 Active Line Modules
5/39 Active Interface Modules
5/43 Basic Line Filters
5/44 Recommended line-side components
5/45 Basic Line Modules
5/51 Line reactors
5/52 Line filters
5/53 Recommended line-side components
5/54 Motor Modules
5/54 Single Motor Modules
5/65 Double Motor Modules
5/72 Series motor reactors
5/73 DC link components
5/73 Braking Module
5/74 Braking resistors
5/76 Capacitor Module
5/77 Control Supply Module
5/78 DC link adapters

5/79 Chassis format
5/79 Line Modules
5/79 Active Line Modules
5/81 Active Interface Modules
5/83 Recommended line-side components
5/84 Motor Modules
5/84 Single Motor Modules
5/87 DC link components
5/87 Braking Modules
5/89 Braking resistors

5/91 Blocksize format
5/91 Air-cooled Power Modules
5/107 Line reactors
5/109 Line filters
5/111 Recommended line-side overcurrent protection devices
5/113 DC link components
5/113 Braking resistors

5/117 SINAMICS S120 Combi
5/117 Power Modules
5/125 External fan module, Reinforcement plates
5/126 Line reactors
5/127 Line filters
5/128 SINAMICS S120 booksize compact format
5/129 Single Motor Modules
5/133 Double Motor Modules

5/137 SINAMICS S120M
5/137 Distributed servo drive

5/144 Supplementary system components
5/144 CBE20 Communication Board
5/145 CUA31 Control Unit Adapter
5/146 DMC20 DRIVE-CLiQ Hub Module
5/147 DME20 DRIVE-CLiQ Hub Module
5/149 TM15 Terminal Module
5/150 TM31 Terminal Module
5/152 TM41 Terminal Module
5/154 TM120 Terminal Module
5/155 Hydraulic Linear Actor (HLA module)
5/156 VSM10 Voltage Sensing Module
5/157 Safe Brake Relay

5/158 Encoder system connection
5/159 SMC10 Sensor Module Cabinet-Mounted
5/160 SMC20 Sensor Module Cabinet-Mounted
5/161 SMC30 Sensor Module Cabinet-Mounted
5/162 SMC40 Sensor Module Cabinet-Mounted
5/163 SME20/SME25 Sensor Modules External
5/165 SME120/SME125 Sensor Modules External

Part 9 **Drive Technology Configurator selection tool**
Guided product selection through to exact article number.
www.siemens.com/dt-configurator

© Siemens 2022

SINAMICS S120 drive system

Overview

SINUMERIK and SINAMICS automation system components

SINAMICS S120 drive system

Line-side components
Line reactors
Line filters
Active Interface Modules

Line Modules
Smart Line Modules
Active Line Modules
Basic Line Modules

DC link components
Braking Module
Braking resistors
Capacitor Module
Control Supply Module

Control Units
CU310-2
CU320-2
CUA31

Control Units SINUMERIK 840D sl
NCU 710.3B PN
NCU 720.3B PN
NCU 730.3B PN
NX10.3/NX15.3

SINAMICS S120 Combi

Motor Modules
Single Motor Modules
Double Motor Modules

Sensor Modules
SMC10/SMC20/SMC30/SMC40
SME20/SME25
SME120/SME125

Supplementary system components
DMC20
DME20
TM41
TM120
TM15

Power Modules

G_NC01_EN_00523d

© Siemens 2022

Overview (continued)

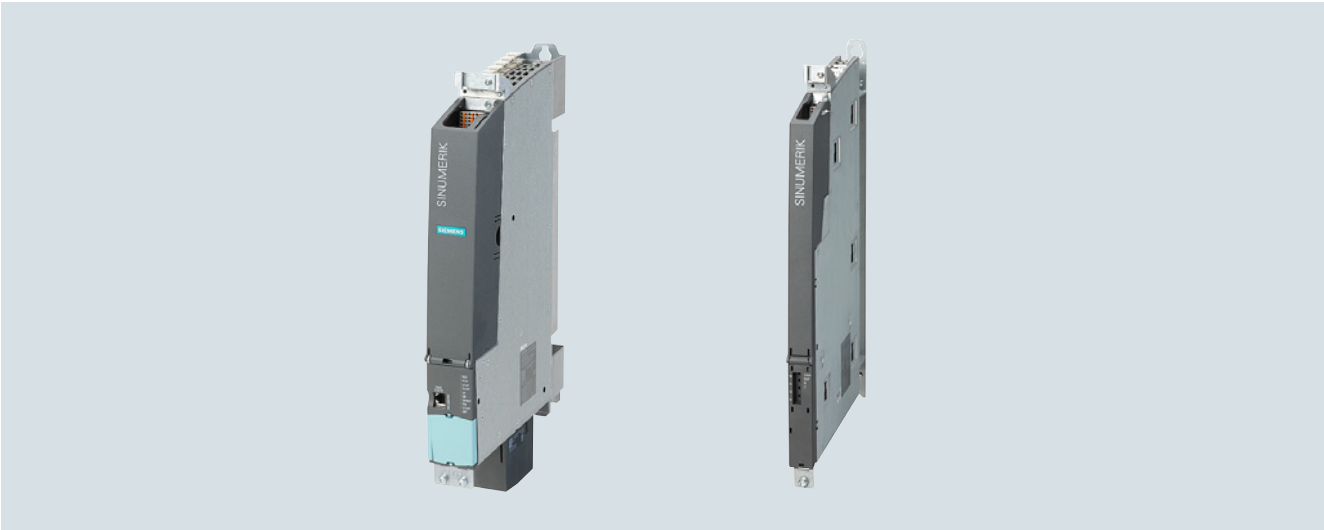

SINUMERIK NCU 730.3B PN and Numeric Control Extension NX15.3 (from left)

Platform Concept and Totally Integrated Automation

All SINAMICS versions are based on a platform concept. Common hardware and software components, as well as standardized tools for design, configuration and commissioning tasks, ensure high-level integration across all components.

SINAMICS handles a wide variety of drive tasks without system gaps. The different SINAMICS versions can be easily combined with each other.

SINAMICS is part of the Siemens "Totally Integrated Automation" concept. Integrated SINAMICS systems covering engineering, data management and communication at automation level, ensure low-maintenance solutions with the SINUMERIK, SIMOTION, and SIMATIC control systems.

All formats can be combined freely

The different formats of SINAMICS S120 can be combined freely thanks to their innovative drive architecture with DRIVE-CLiQ interfaces, e.g. Line Modules in chassis format can be freely combined with Motor Modules in booksize format for multi-axis applications with high total output.

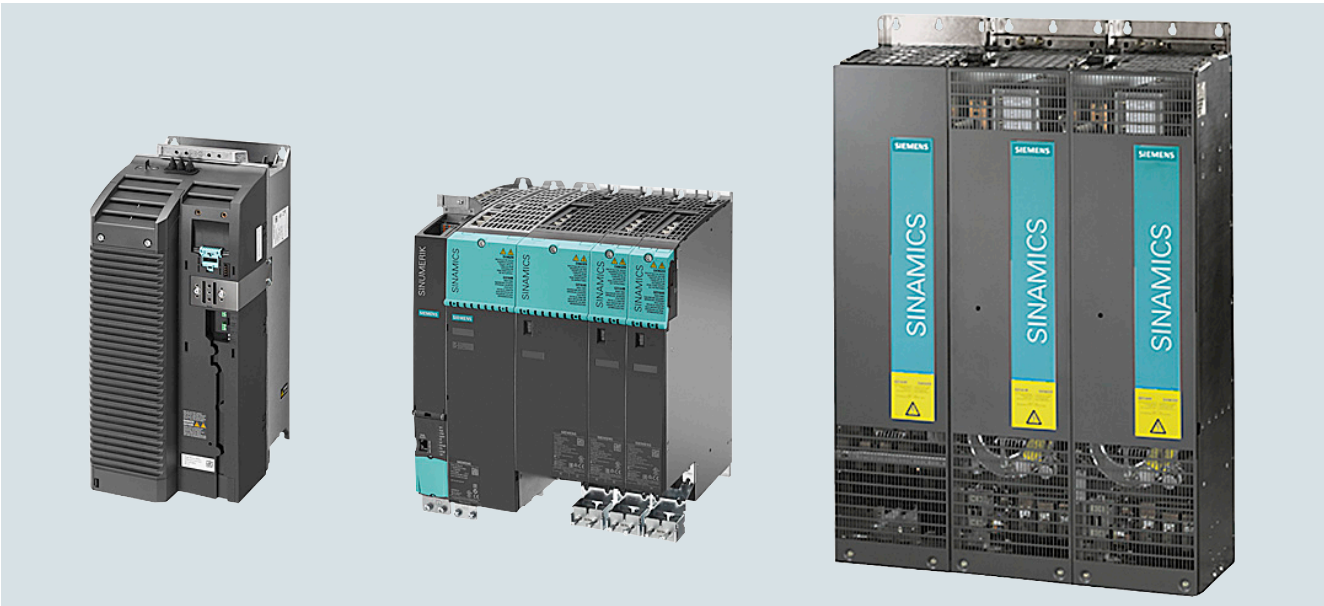

SINAMICS S120 blocksize, booksize, and chassis formats

© Siemens 2022

Overview (continued)

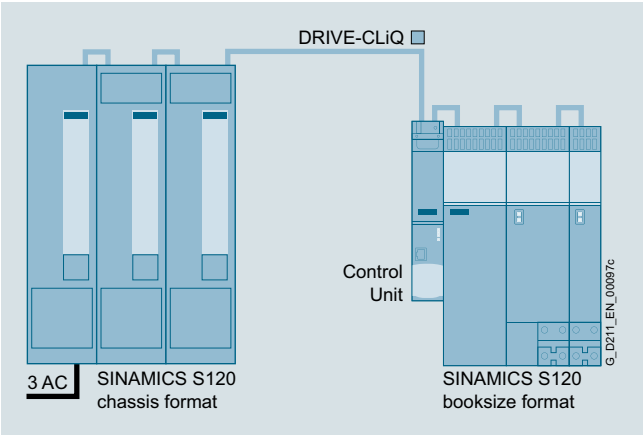

Modular system for demanding drive tasks

SINAMICS S120 solves demanding drive tasks for a wide range of industrial applications and is, therefore, designed as a modular system. Users can choose from many different harmonized components and functions to create a solution that best meets their requirements. SIZER, a high-performance configuring tool, makes it easier to choose and determine the optimum drive configuration. This is possible due to the consistent subdivision of the drive in hardware and software function objects, which ensures that the power unit and Control Unit are isolated from each other.

The power units are selected in accordance with the requirements for energy consumption for the motion of the working machine and for exchange of energy with the power supply network. The Control Unit is selected in accordance with the number of drives to be controlled and the performance required. Communication between the Control Unit and power unit takes place very simply via the digital system interface DRIVE-CLiQ.

SINAMICS S120 is enhanced by a wide range of motors. Whether synchronous or asynchronous, all motor types are supported by SINAMICS S120.

Particularly suitable for multi-axis applications

Coordinated drives that carry out a drive and motion task together are used in many mechanical and plant engineering applications, These require drives with a connected DC link, which allows cost-saving energy balancing between braking and driving axes.

SINAMICS S120 features Line Modules (infeed modules) and Motor Modules (inverter modules) covering a wide power range which, having been designed for seamless integration, pave the way for compact multi-axis drive configurations.

New system architecture with a central Control Unit

Electronically coordinated single drives work together to perform the drive tasks. Higher-level computerized numerical controls such as SINUMERIK operate the drives to achieve the required coordinated movement. This requires cyclic data exchange between the CNC and all the drives. This exchange usually took place via a fieldbus, which required a great deal of time and effort for installation and configuration. SINAMICS S120 takes a different approach. A central Control Unit controls the drive for all connected axes and also establishes the technological links between the drives and/or axes. Since all the required data is stored in the central Control Unit, it does not need to be transferred. Inter-axis connections can be established within a Control Unit. They can be easily configured in the STARTER commissioning tool or with the drive commissioning wizard integrated in the SINUMERIK HMI interface. Of course, a number of Control Units can be interconnected to create an expanded group if your application exceeds the computing performance of one Control Unit.

Simple technological tasks can be carried out automatically by the SINAMICS S120 Control Unit. For more complex numerical tasks, they are replaced by powerful modules from the SINUMERIK product range.

As well as motion control, coordinate transformation and logic functions, these products also integrate the SINAMICS drive control. The NCUs of SINUMERIK can be positioned in or alongside the SINAMICS S120 drive group and connected via DRIVE-CLiQ. For the implementation of distributed solutions, the NCU can also be placed up to 100 m away from the drive group. In case of application solutions that have a greater number of motion axes in the machine kinematics, the system base units can be expanded with the additional Numeric Control Extensions NX10.3/NX15.3.

DRIVE-CLiQ – the digital interface between all components

All SINAMICS S120 drive system components, including the motors and encoders, are interconnected by a shared serial interface called DRIVE-CLiQ. The standardized cables and connectors reduce the variety of different parts and cut storage costs.

Sensor Modules (converter boards) for converting standard encoder signals to DRIVE-CLiQ are available for motors and encoders without a DRIVE-CLiQ interface or for retrofitting applications.

Swift and automatic: The electronic rating plate

All SINAMICS S120 components with a DRIVE-CLiQ interface have an electronic rating plate that contains all the relevant data about that particular component. For motors, for example, these data include the parameters of the electric equivalent circuit diagram and characteristic values for the built-in motor encoder. The Control Unit records this component-specific data automatically via DRIVE-CLiQ so that it does not need to be entered during commissioning or when the equipment is replaced.

In addition to the technical data, the electronic rating plate includes logistical data such as the manufacturer ID, article number, and globally unique ID. Since these data can be called up electronically on site or remotely, all the components used in a machine can always be individually identified, which helps simplify servicing.

The following overviews feature the SINAMICS S120 components that are primarily used for multi-axis drive tasks.

© Siemens 2022

Overview (continued)

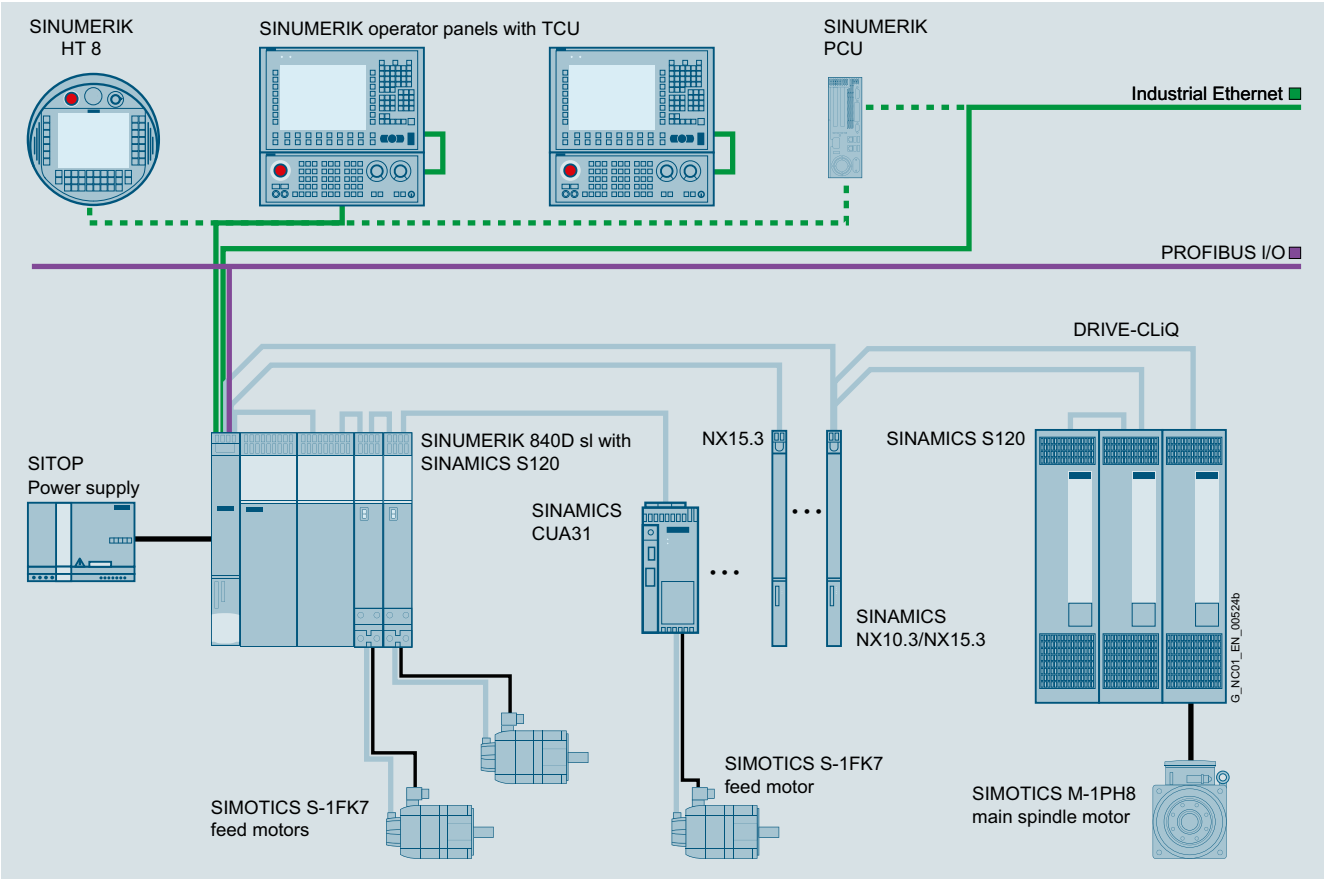

Example: SINAMICS S120 drive system with SINUMERIK 840D sl

© Siemens 2022

Overview (continued)

Control Units

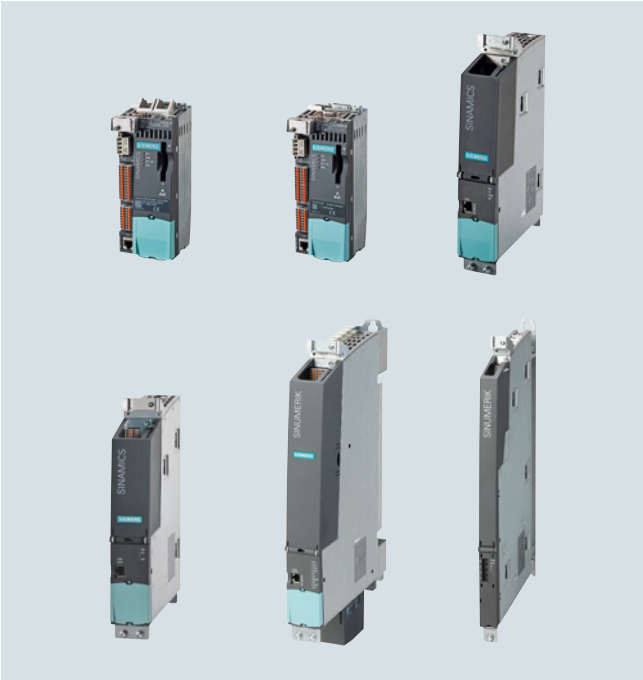

Control Units CU310-2 PN, Control Units CU310-2 DP, CU320-2 PN, CU320-2 DP, NCU 730.3 PN and Numeric Control Extension NX15.3

Control Units for drive control in SINUMERIK, the Numeric Control Extensions NX and the CU320-2

SINAMICS S120 CU320-2 Control Unit

These central Control Units can be used to create links between individual drives and implement simple technology functions.

The CU320-2 Control Unit has been designed to control multiple drives. With the SINUMERIK, up to 6 drives can be operated in servo control mode on one Control Unit.

The Control Units in the SINUMERIK CNCs are available in various rating classes for implementing coordinated motion control in a multi-axis interpolation grouping on machine tools:

SINUMERIK 840D sl

- NCU 710.3B PN/NCU 720.3B PN/NCU 730.3B PN with integrated drive control for up to 6 axes
- Numeric Control Extensions NX10.3/NX15.3 for extended control of up to 3/6 axes

Commissioning and diagnostics of the various Control Units in combination with the power components is performed in conjunction with the SINUMERIK using the drive wizard of the HMI Operate commissioning tool. Alternatively, the drive can be commissioned using the STARTER commissioning tool.

For further information about STARTER, see Engineering software.

Motor Modules

The Motor Modules are the final controlling element for the motor and feature a DC link that is fed from a DC voltage and, as an output, an inverter for feeding the motor.

SINAMICS S120 Motor Modules in booksize format C/D types

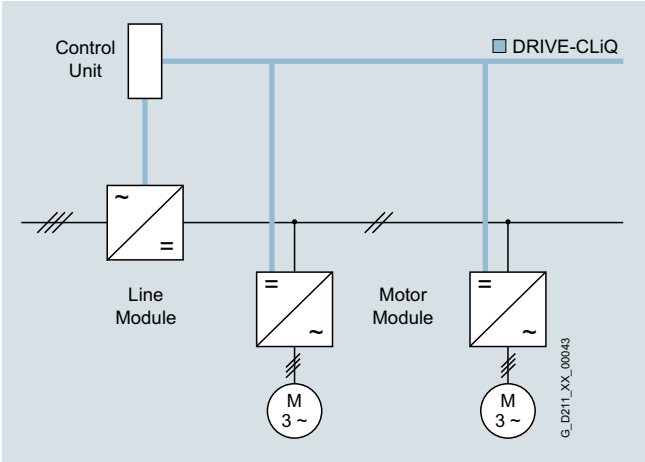

Motor Modules are designed for multi-axis drives and are controlled by a SINUMERIK NCU or a CU320 Control Unit. The Motor Modules are interconnected through a common DC bus. Since the Motor Modules share the same DC link, they can exchange energy with one another, i.e. if one Motor Module operating in generator mode produces energy, the energy can be used by another Motor Module operating in motor mode. The voltage-source DC link is supplied with mains voltage by a Line Module.

© Siemens 2022

Overview (continued)

Line Modules

Line Modules generate a DC voltage from the line voltage and supply Motor Modules with energy via the voltage-source DC link. The SINAMICS S120 range contains the following types of Line Modules:

Basic Line Modules

Basic Line Modules are designed only for infeed operation, i.e. they are not capable of recovering energy to the line supply. If regenerative energy is produced, e.g. when drives brake, it must be converted to heat by means of a Braking Module and a braking resistor. When a Basic Line Module is used as the infeed, the matching line reactor must be installed. A line filter can be installed optionally in order to comply with the EN 61800-3 Category C2 limits.

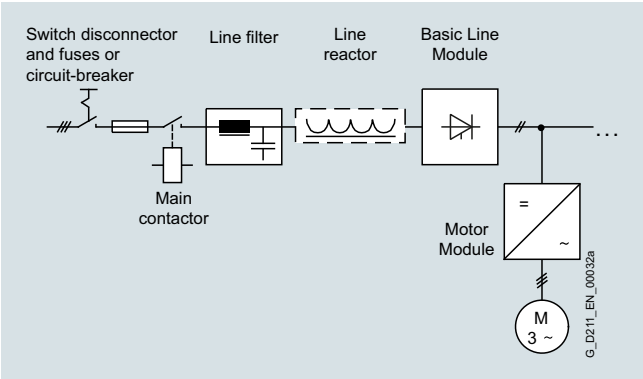

Smart Line Modules

Smart Line Modules can feed energy to the DC link of a drive group through a non-stabilized converter and also feed back the generated excess energy into the power supply system. The line voltage variations are mirrored proportionately in the DC link voltage. Braking Modules and braking resistor are required only if the drives need to be decelerated in a controlled manner for island supply systems or after a power failure (i.e. when energy cannot be recovered to the supply). When a Smart Line Module is used as the infeed, the matching line reactor must be installed. A line filter can be installed optionally to restrict the interference voltage level to Class C2 limits (EN 61800-3).

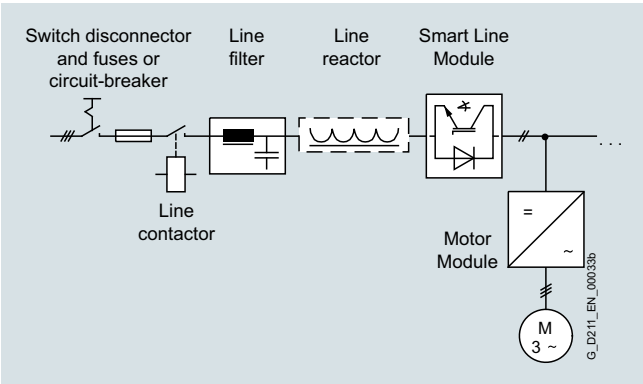

Active Line Modules

Active Line Modules can supply energy to the DC link rail and return regenerative energy to the supply system. In contrast to Smart Line Modules, Active Line Modules generate a regulated DC voltage which remains constant despite fluctuations in the line voltage. In this case, the line voltage must remain within the permissible tolerance range. Braking Modules and braking resistors are required only if the drives need to be decelerated in a controlled manner even after a power failure (when energy cannot be recovered to the supply). Active Line Modules draw a virtually sinusoidal current from the supply which virtually rules out any harmful harmonics.

Active Line Modules in chassis format

All the components required to operate an Active Line Module are integrated in the Active Interface Module.

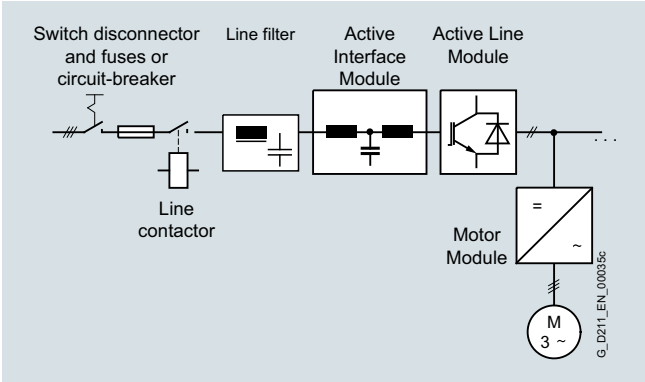

© Siemens 2022

Overview (continued)

Power Modules

The simplest version of a SINAMICS S120 drive system comprises a CU310-2 Control Unit and a Power Module. A mains rectifier, a voltage-source DC link and an inverter for supplying a motor are integrated in the Power Module.

Power Module in blocksize format

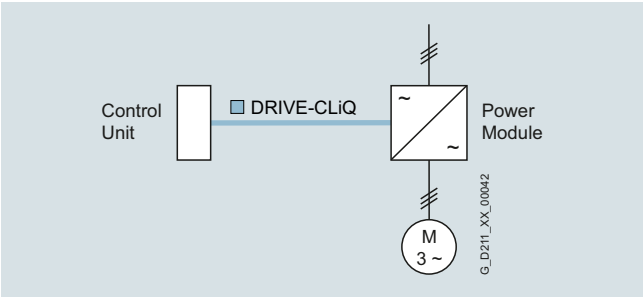

Power Modules are designed for single drives which are not capable of regenerating energy to the supply. Generated energy produced during braking is converted to heat via braking resistors.

Power Modules can also be operated by a CU320-2 Control Unit or a drive control integrated in SINUMERIK, e.g. in configurations where a single drive has been added to a multi-axis drive group. In this case, the Power Modules in blocksize format must be equipped with the CUA31 Control Unit Adapter. This is connected with the CU320-2 Control Unit or the NCU in SINUMERIK using DRIVE-CLiQ. Power Modules in chassis format are directly connected to the Control Unit using a DRIVE-CLiQ cable.

The following versions are available:

- Motor Modules and Line Modules in booksize and chassis formats
- Power Modules in blocksize and chassis formats
- Motor Modules in booksize compact format
- SINAMICS S120 Combi

© Siemens 2022

Overview (continued)

Booksize format

Booksize format units are optimized for multi-axis applications and are mounted adjacent to one another. The connection for the shared voltage-source DC link is an integral feature.

Internal air cooling

In this standard solution, the power loss from the electronics and power units of the drive components is removed by natural cooling or by a forced-ventilation system and routed to the interior of the control cabinet.

Chassis format

Higher-output units (approximately 100 kW and above) are constructed in chassis format. These devices are available as Line Modules and Motor Modules. Chassis format units are cooled by an internal air cooling circuit.

Blocksize format

The units in blocksize format are optimized for single-axis applications.

The CU310-2 DP/CU310-2 PN Control Units or CUA31 Control Unit Adapters can be snapped on directly. The units are cooled by an internal air cooling circuit.

Power Module with Control Unit and Operator Panel plugged in

SINAMICS S120 Combi

SINAMICS S120 Combi is a very compact and rugged drive system for compact turning and milling machines.

SINAMICS S120 Combi integrates a line infeed with regenerative feedback capability, power units for spindle and feed motors as well as a TTL encoder interface into a single Power Module.

Special features are the minimum space requirement in the control cabinet, low energy requirement thanks to state-of-the-art 400-V technology, and perfected expendability using additional Motor Modules in booksize compact format.

The use of Motor Modules in booksize compact format is only permissible in combination with SINAMICS S120 Combi.

An intelligent DRIVE-CLiQ interface is provided for cabling.

SINAMICS S120 Combi

© Siemens 2022

Overview (continued)

Additional system components

The structure of the drive system is defined by the selected Control Unit, Line Module, and Motor Modules or Power Module. An optimal solution can be obtained for the drive task using these system components.

Additional system components can be installed to expand the system's scope of functions and adapt it perfectly to the drive task in question.

System components are divided into the following categories:

- **DC link components**
  such as Braking Modules and braking resistors
  Further DC link components are optionally installed to stabilize the DC link voltage and/or to support the electronics power supply.
- **Supplementary system components**
  such as Terminal Modules for expanding the I/O interfaces to the machine interface
- **Encoder system connection**
  for connecting various types of encoders to SINAMICS S120
- **Line-side power components**
  such as fuses, contactors, reactors, and filters for switching the power supply and meeting EMC requirements.

Energy efficiency

The SINAMICS S120 drive system saves energy by recovering energy from the axes and using it within the DC link group of a multi-axis configuration and by feeding it back into the supply system. Even at full infeed capacity, no unnecessary heat is generated in the control cabinet. With intelligent compensation of capacitive and inductive reactive currents, SINAMICS S120 also ensures that no unnecessary power losses occur in the power supply and that no current harmonics occur. This not only prevents detrimental effects on other loads, but it also reduces the heat generated in the control cabinet.

The SINAMICS S120 components have been developed for installation in cabinets

They have the following features and characteristics:

- User friendliness
- Simple assembly and wiring
- Practical connection system, cable routing in accordance with EMC requirements
- Uniform design
- Contiguous assembly

Rugged units

The SINAMICS units are equipped as standard with varnished or partially varnished modules for enhanced robustness.

The varnish coating protects the sensitive SMD components against corrosive gases, chemically active dust and moisture.

© Siemens 2022

Technical specifications

The most important directives and standards are listed below. These are used as the basis for the SINAMICS S120 built-in units and they must be carefully observed to achieve an EMC-compliant configuration that is safe both functionally and in operation.

European standards	
EN 61508-1	Functional safety of electrical/ electronic/programmable electronic safety-related systems Part 1: General requirements
EN 60204-1	Electrical equipment of machines Part 1: General definitions
EN 61800-3	Adjustable speed electrical power drive systems Part 3: EMC product standard including specific test methods
IEC/EN 61800-5-1	Adjustable-speed electrical power drive systems Part 5: Safety requirements Main section 1: Electrical and thermal requirements
North American standards	
UL 508C	Power Conversion Equipment
UL 61800-5-1	Adjustable Speed Electrical Power Drive Systems
CSA C22.2 No. 14	Industrial Control Equipment
Certificates of suitability	
cULus	Testing by UL (Underwriters Laboratories, www.ul.com) according to UL and CSA standards

More information

For reliable operation of the drive system, original components of the SINAMICS drive system and the original Siemens accessories as described in this Catalog and the Configuration Manuals, in the functional descriptions or user manuals must be used.

The user must observe the configuring instructions.

Combinations that differ from the configuring instructions (also in conjunction with non-Siemens products) require a special agreement.

If no original components are used, for example, for repairs, approvals such as UL, EN and Safety Integrated can become invalid. This may also result in the operating authorization for the machine in which the non-Siemens components are installed becoming invalid.

All of the certificates of suitability, approvals, certificates, declarations of conformity, test certificates, e.g. CE, UL, Safety Integrated, have been performed with the associated system components as they are described in the Catalogs and Configuration Manuals. The certificates are only valid if the products are used with the described system components, are installed according to the Installation Guidelines and are used for their intended purpose. In other cases, the vendor of these products is responsible for arranging that new certificates are issued.

© Siemens 2022

Overview

What is PROFIBUS?

PROFIBUS is the most successful open fieldbus used for automation technology which can be used for a wide range of applications. Standardization according to IEC 61158/EN 50170 secures your investments for the future.

PROFIBUS defines the technical and functional features of a serial fieldbus system, with which the distributed field automation devices in the lower area (sensor/actuator level) can be networked up to the mid performance range (cell level).

The requirements of users for an open, non-proprietary communication system have resulted in the specification and standardization of the PROFIBUS protocol.

Multi-vendor installations

Using the conformity and interoperability test performed by the test laboratories authorized by PROFIBUS & PROFINET International (PI) and the certification of the devices by PI, users have the security that the quality and functionality is guaranteed, even in multi-vendor installations.

PROFIBUS versions

PROFIBUS FMS (Fieldbus Message Specification) – The universal solution for communication tasks on the field and cell level of the industrial communication hierarchy.

PROFIBUS PA (Process Automation) – The version for applications in process automation. PROFIBUS PA uses intrinsically secure data transfer technology defined in IEC 61158-2.

PROFIBUS DP (Distributed Peripherals) – This version, which is optimized for speed, is tailored especially for the communication of automation systems with distributed I/O stations and drives. The outstanding features of PROFIBUS DP are

- very short response times
- high interference immunity

PROFIBUS DP replaces cost-intensive parallel signal transmission with 24 V and the measured value transmission with 0 mA or 4 mA to 20 mA technology.

PROFIBUS and SINAMICS

SINAMICS uses the PROFIBUS DP protocol.

Design

Bus nodes

PROFIBUS DP distinguishes between two different master classes and one slave class:

DP master Class 1

For PROFIBUS DP, DP master Class 1 is the central component. In a defined message cycle that always repeats itself, the central master station exchanges information with distributed stations (DP slaves).

DP master Class 2

Devices of this type are used (programming, configuration or control devices) during start-up, for configuring the DP system, for diagnostics or controlling the plant during normal operation. A DP master Class 2 can be used, for example, to read the input, output, diagnostic and configuration data of the slaves.

DP slave

A DP slave is an I/O device, which receives output information or setpoints from the DP master, and as response, returns input information, measured values and actual values to the DP master. A DP slave never sends data automatically, but only when requested by the DP master.

The quantity of input and output information depends on the device, and for each DP slave in each send direction can be a maximum of 244 bytes.

© Siemens 2022

Function

Functions on PROFIBUS DP

The functional scope can differ between DP masters and DP slaves. The functional scope is different for DP-V0, DP-V1 and DP-V2.

DP-V0

The DP master functions (DP-V0) comprise of the functions "Configuration", "Parameter assignment", "Read diagnostic data" as well as "Cyclic reading of input data/actual values" and "Writing output data/setpoints".

DP-V1

The additional DP function expansions (DP-V1) make it possible to perform acyclic read and write functions as well as processing cyclic data communication. This type of slave must be supplied with extensive parameterization data during start-up and during normal operation. These acyclically transferred parameterization data are only rarely changed in comparison to the cyclic setpoints, actual values, and measured values, and are transferred at lower priority in parallel with the cyclic high-speed user data transfer. Detailed diagnostic information can be transferred in the same way.

DP-V2

The extended DP master functions (DP-V2) mainly comprise functions for isochronous operation and direct data exchange between DP slaves.

Isochronous mode is implemented by means of an equidistant clock signal in the bus system. This cyclic, equidistant cycle is sent by the DP master to all bus nodes in the form of a Global Control Telegram. Master and slaves can then synchronize their applications with this signal. The jitter of the clock signal from cycle to cycle is less than 1 µs.

The "publisher/subscriber" model is used to implement slave-to-slave communication. Slaves declared as publishers make their input data/actual values and measured values available to other slaves, the subscribers, for reading. This is performed by sending the response frame to the master as a broadcast. Slave-to-slave communication is therefore a cyclic process.

SINAMICS and PROFIBUS DP

The SINAMICS S120 drive system can operate only as a DP slave and supports all communication functions, i.e. DP-V0, DP-V1 and DP-V2.

SINUMERIK and PROFIBUS DP

The SINUMERIK 840D sl control system functions as the DP master for drive axes and supports all DP-V0, DP-V1 and DP-V2 communication functions. SINAMICS S120 drives as well as distributed hydraulic axes can be linked as slaves to these systems. The decentralized hydraulic axes can only be used with isochronous PROFIBUS.

© Siemens 2022

Overview

G_D211_XX_00050

PROFINET is the innovative, open Industrial Ethernet standard (IEC 61158) for the industrial automation environment. With PROFINET, devices can be linked up from the field level through to the management level.

PROFINET enables system-wide communication, supports plant-wide engineering and applies IT standards right down to the field level. IT communication, data communication and cyclic process communication are combined on the basis of Industrial Ethernet.

Existing fieldbus systems such as PROFIBUS can also be simply integrated without having to change existing devices.

Your advantages at a glance

Flexibility	Efficiency	Performance
Tailor-made plant concepts	Optimal use of resources	Increased productivity
Industrial Wireless LAN	One cable for everything	Speed
Safety	Device/network diagnostics	High precision
Flexible topologies	Energy efficiency	Large quantity structures
Open standard	Simple wiring	High transmission rate
Web tools	Fast device replacement	Redundancy
Expandability	Ruggedness/stability	Fast start-up

G_IK10_XX_10304

Design

PROFINET device concept

PROFINET distinguishes between the controller and its assigned devices. These are initialized and parameterized by the controllers on power-up. The controller and its devices together constitute a PROFINET I/O system (compare master/slave system for PROFIBUS).

For PROFINET, cyclic communication between an IO Controller and its IO Devices is performed in the same way as for PROFIBUS over the process image. The process image is updated cyclically. Depending on the requirements and device characteristic, this takes place in real-time (RT, devices are typically distributed IO Devices) or isochronous real-time (IRT, devices are typically servo drives). Further, PROFINET permits communication between the controllers and devices of different IO systems.

PROFINET IO with RT for simple standard drive applications

With typical cycle times between 4 ms and 10 ms, PROFINET IO with RT offers the same performance characteristics as PROFIBUS as regards cyclic data transmission.

With this performance level, all standard drive applications belonging to PROFIdrive application categories 1 to 3 can be automated, i.e. those categories requiring the specification of speed, torque and current setpoints or target positions which do not need to be linked isochronously.

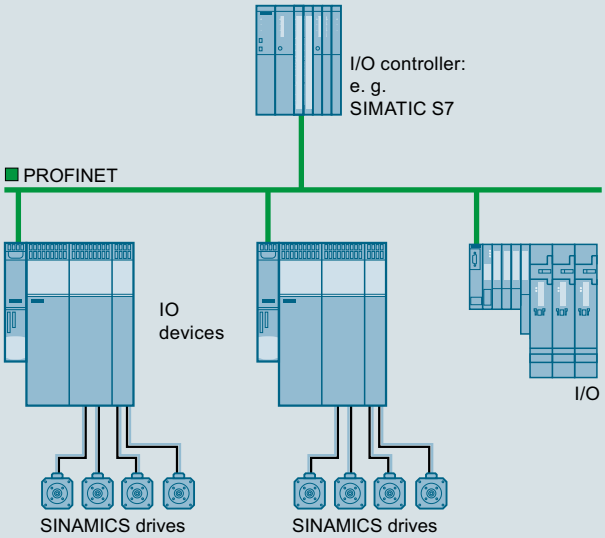

G_D211_EN_00052a

© Siemens 2022

Design (continued)

PROFINET IO with IRT for Motion Control

In this case, a Motion Control system controls or synchronizes axes using the PROFINET network. This requires cyclic, isochronous data exchange with the drives. PROFINET IO with IRT fulfills this requirement. The communication cycle is subdivided into different, time-specific channels for this purpose. The first channel is used for isochronous real-time communication (IRT), followed by real-time communication (RT) and standard TCP/IP communication. By appropriately configuring the application, e.g. a synchronous relationship between axes, IRT telegrams are implicitly determined and the appropriate configuration data generated.

The optimum time sequence of the individual messages for each network section is calculated with a special algorithm which takes the topology into account. This means that the switch is in a position to transfer the IRT telegrams without delay from the input port to the defined output port and then to the target device.

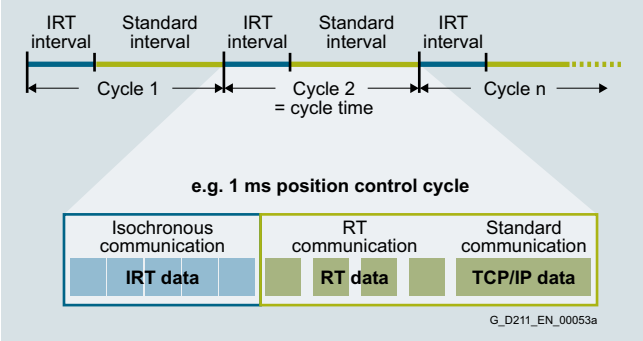

Transition from PROFIBUS to PROFINET

The functional interface between the controller and the SINAMICS drives for PROFINET and PROFIBUS is defined by the PROFIdrive V4 profile of PROFIBUS International. When making a transition from PROFIBUS to PROFINET, the user program does not have to be changed.

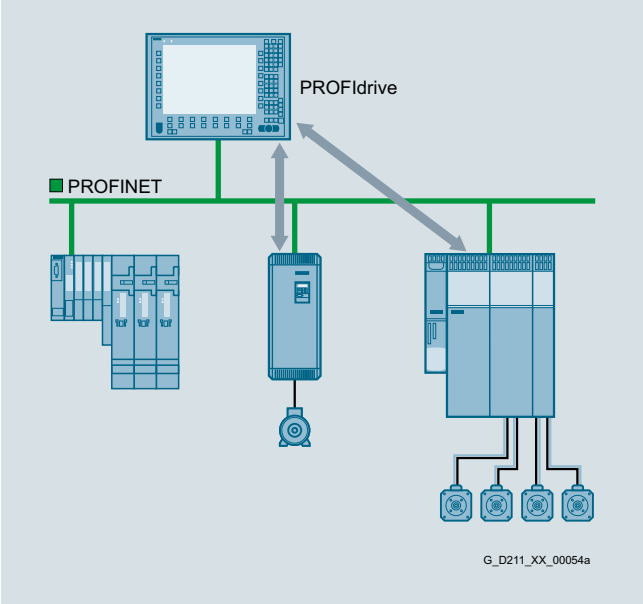

PROFINET with PROFIdrive

Design (continued)

Motion Control concepts with PROFINET

With SINAMICS, PROFINET supports the implementation of different automation structures. Distributed drive-based motion control concepts or central architectures with a control are supported in the same way as distributed automation solutions with modular automation components.

PROFINET – interface on SINAMICS

- SINAMICS S120 with CU320-2 DP Control Unit and CBE20 Communication Board
  The CU320-2 DP Control Unit on SINAMICS S120 is linked to the PROFINET IO network via the CBE20 Communication Board.
- SINAMICS S120 with CU320-2 PN Control Unit
  The CU320-2 Control Unit on SINAMICS S120 is linked to the PROFINET IO network via the on-board PROFINET interface.
- SINAMICS S120 with CU320-2 PN Control Unit and CBE20 Communication Board
  The CU320-2 PN Control Unit on SINAMICS S120 is linked to the PROFINET IO network via the CBE20 Communication Board.
- SINAMICS S120 with CU310-2 PN Control Unit
  The CU310-2 PN Control Unit on SINAMICS S120 is linked to the PROFINET IO network via the on-board PROFINET interface.

Function

Real-time communication with PROFINET IO

PROFINET uses standard TCP/IP for parameter assignment, engineering and diagnostics. Real-time communication for the transmission of process data is performed on the same line. PROFINET IO has the following real-time features:

- Real-Time (RT)
  uses the option of prioritizing the communication stack of the bus nodes. This permits high-performance data transmission based on standard network components.
- Isochronous real-time (IRT)
  permits strict deterministic, cyclic data transmission with extremely short response times and minimum jitter for high-performance motion control applications. This feature is implemented with a special ASIC, named ERTEC (Enhanced Real Time Ethernet Controller), in the corresponding interfaces (switch integrated into device) or network components (switch).

Automation with PROFINET

With these and other features, PROFINET fulfills all automation requirements: Industry-compatible installation technology, real-time capability, deterministic responses, integration of distributed field devices, simple network administration and diagnostics, protection against unauthorized access, efficient vendor-independent engineering as well as isochronous motion control applications.

PROFINET relies on switch technology and has expanded this technology for real-time applications (IRT). This has the advantage that the network topology can be optimally utilized and adapted to the requirements of the machine. Collisions are avoided and therefore optimum data flow rates achieved.

© Siemens 2022

Overview

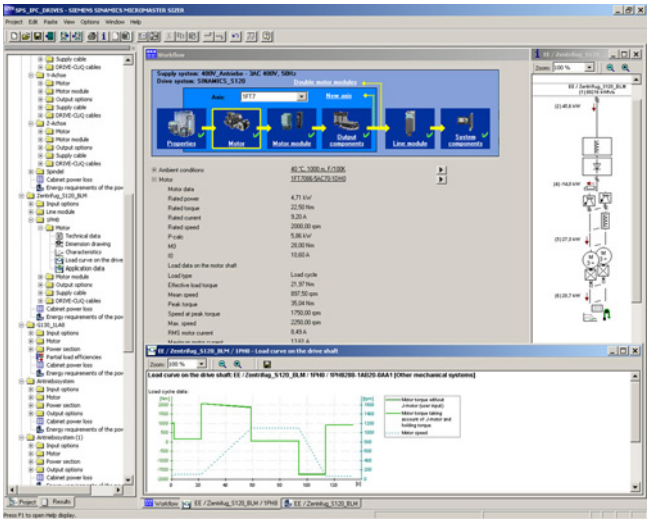

The following drives and controls can be engineered in a user-friendly way using the SIZER for Siemens Drives engineering tool:

- SIMOTICS low-voltage motors, including servo geared motors
- SIMOGEAR geared motors
- SINAMICS low-voltage drive systems
- Motor starters
- SINUMERIK CNC
- SIMOTION Motion Control controller
- SIMATIC controller

It provides support when selecting the technologies involved in the hardware and firmware components required for a drive task. SIZER for Siemens Drives covers the full range of operations required to configure a complete drive system, from basic single drives to demanding multi-axis applications.

SIZER for Siemens Drives supports all of the engineering steps in one workflow:

- Configuring the power supply
- Designing the motor and gearbox, including calculation of mechanical transmission elements
- Configuring the drive components
- Compiling the required accessories
- Selecting the line-side and motor-side power options, e.g. cables, filters, and reactors

When SIZER for Siemens Drives was being designed, particular importance was placed on a high degree of usability and a universal, function-based approach to the drive application. The extensive user guidance makes it easy to use the tool. Status information keeps you continually informed about the progress of the configuration process.

The drive configuration is saved in a project. In the project, the components and functions used are displayed in a hierarchical tree structure.

The project view permits the configuration of drive systems and the copying/inserting/modifying of drives already configured.

Overview (continued)

The configuration process produces the following results:

- A parts list of the required components (export to Excel, use of the Excel data sheet for import to SAP)
- Technical specifications of the system
- Characteristic curves
- Comments on system reactions
- Mounting arrangement of drive and control components and dimensional drawings of motors
- Energy requirements of the configured application

These results are displayed in a results tree and can be reused for documentation purposes.

Support is provided by the technological online help menu:

- Detailed technical specifications
- Information about the drive systems and their components
- Decision-making criteria for the selection of components
- Online help in English, French, German, Italian, Chinese and Japanese

System requirements

- PG or PC with Pentium III min. 800 MHz (recommended > 1 GHz)
- 512 MB RAM (1 GB RAM recommended)
- At least 4.1 GB of free hard disk space
- An additional 100 MB of free hard disk space on Windows system drive
- Screen resolution 1024 × 768 pixels (1280 × 1024 pixels recommended)
- Operating system:
  - Windows 7 (32/64-bit) Professional, Enterprise, Ultimate, Home
  - Windows 8.1 (32/64-bit) Professional, Enterprise, Ultimate, Home
  - Windows 365
  - Windows 10 (64 bit) Professional, Enterprise
- Microsoft Office 2003/2007/2010/2013/2016
- Microsoft Internet Explorer V8.0
- Microsoft .NET Framework 2.0
- OpenGL 2.1

Selection and ordering data

Description	Article No.
SIZER for Siemens Drives engineering tool on DVD-ROM English, French, German, Italian	**6SL3070-0AA00-0AG0**

More information

The SIZER for Siemens Drives engineering tool is available free on the Internet at
www.siemens.com/sizer

© Siemens 2022

Overview

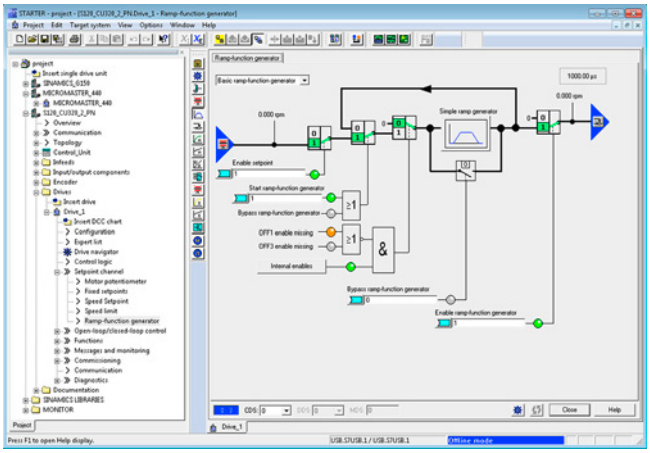

The user-friendly STARTER commissioning tool can be used for:

- Commissioning
- Optimization
- Diagnostics

This software can be operated as a standalone PC application, or integrated as a TIA-compatible program in SIMATIC STEP 7, or highly integrated into the SCOUT Engineering System (for SIMOTION). The basic functions and handling are the same in both cases.

In addition to the SINAMICS drives, STARTER also supports MICROMASTER 4 devices.

The project wizards can be used to create the drives within the structure of the project tree.

Beginners are supported by solution-based dialog guidance, whereby a standard graphics-based display maximizes clarity when setting the drive parameters.

First commissioning is guided by a wizard which makes all the basic settings in the drive. Therefore, getting a motor up and running is merely a question of setting a few of the drive parameters as part of the drive configuration process.

The individual settings required are made using graphics-based parameterization screens, which also precisely visualize the principle of operation of the drive.

Examples of individual settings that can be made include:

- How terminals are used
- Bus interface
- Setpoint channel (e.g., fixed setpoints)
- Closed-loop speed control (e.g., ramp-function generator, limits)
- BICO interconnections
- Diagnostics

For experts, the expert list can be used to specifically and quickly access individual parameters at any time. An individual compilation of frequently used parameters can be saved in dedicated user lists and watch tables.

Overview (continued)

In addition, the following functions are available for optimization purposes:

- Self-optimization of the controller settings (depending on drive unit)
- Setup and evaluation of trace recordings [1)]
  Tool function for recording 2 × 8 signals with
  - Measuring cursor function
  - Extensive trigger functions
  - Several Y scales
  - Sampling times in the current controller cycle clock

Diagnostics functions provide information about:

- Control/status words
- Parameter status
- Operating conditions
- Communication states

Performance features

- User-friendly: Only a small number of settings need to be made for successful first commissioning: The motor starts to rotate
- Solution-oriented dialog-based user guidance simplifies commissioning
- Self-optimization functions reduce manual effort for optimization.

System requirements

The following minimum requirements must be complied with:

- Hardware
  - PG or PC with Pentium III min. 1 GHz (recommended >1 GHz)
  - Work memory 2 GB (4 GB recommended)
  - Screen resolution 1024 × 768 pixels, 16-bit color depth
  - Free hard disk memory: min. 5 GB
- Software
  - Microsoft Internet Explorer V6.0 or higher
  - 64-bit operating systems:
    Microsoft Windows 7 Professional SP1
    Microsoft Windows 7 Ultimate SP1
    Microsoft Windows 7 Enterprise SP1 (standard installation)
    Microsoft Windows Server 2016
    Microsoft Windows 10 Pro
    Microsoft Windows 10 Enterprise

Supported virtualization platforms

STARTER (V5.1 SP1 and higher) can be installed on a virtual machine. For this purpose, one of the following virtualization platforms in the specified version or a newer version can be used:

- VMware vSphere Hypervisor (ESXi) 6.5
- VMware Workstation 11 V12.5.5
- VMware Player Pro 7.0 V12.5.5
- Microsoft Windows Server 2016 Hyper-V

You can use the following guest operating systems to install STARTER within the selected virtualization platform:

- Windows 7 Professional/Ultimate/ Enterprise (64-bit)
- Windows 10 Professional/Enterprise (64-bit)

[1)] Depending on drive unit. Not supported for MICROMASTER 4, SINAMICS G110, SINAMICS G120 <firmware V4.4, SINAMICS G110D and SINAMICS G120D <firmware V4.5.

© Siemens 2022

Integration

Data can be exchanged (depending on the version) via PROFIBUS or PROFINET/Ethernet or via a serial interface.

For commissioning and service, a PG/PC can be connected to the CU320-2 Control Unit via PROFIBUS. A PROFIBUS connection must be available with a connecting cable at the PG/PC.

Further, communication between a CU320-2 Control Unit and PG/PC can also be established via Ethernet, either via an (optional) CBE20 Communication Board or the Ethernet interface -X127 on the CU320-2 Control Unit.

Note:

The terminal strip -X127 is suitable as a communication link to the PG/PC only for the purposes of servicing and commissioning.

Selection and ordering data

Description	Article No.
STARTER commissioning tool for SINAMICS and MICROMASTER English, French, German, Italian, Spanish	**6SL3072-0AA00-0AG0**

Accessories

Depending on the version of the Control Unit (CU), the Control Unit of the drive unit can communicate with the programming device (PG) or PC via PROFIBUS or PROFINET/Ethernet or via a serial interface. The following accessories are available for the particular drive system as listed in the following table.

Description	Recommended accessories For communication between the drive unit and the programming device or PC	Article No.
SINAMICS S110/S120		
• RS232	**SIMATIC S7 connecting cable** Null modem cable, 6 m (19.69 ft)	**6ES7901-1BF00-0XA0**
• PROFIBUS	**CP 5711 communication module** USB adapter for connecting a PG or notebook to PROFIBUS or MPI USB cable (2 m (6.56 ft)) included in scope of supply	**6GK1571-1AA00**
	SIMATIC DP plug-in cable 12 MBaud, for PG connection, pre-assembled with 2 × 9-pin SUB D connector, 3 m (9.84 ft)	**6ES7901-4BD00-0XA0**
• PROFINET/ Ethernet	Standard CAT5 Ethernet cable or PROFINET cable	–

More information

The STARTER commissioning tool is also available on the Internet at
www.siemens.com/starter

© Siemens 2022

Overview

Overview of key open-loop and closed-loop control functions

Description	Closed-loop control types S120	Open-loop control types S120	Main functions S120 for booksize/chassis format	Comment, note
Infeed control	• Booksize - Current control with/without mains sensor - U_{DC} control with/without mains sensor • Chassis - Current control with mains sensor - U_{DC} control with mains sensor	• Booksize - Smart Line mode can be selected • Chassis - None	• Mains identification • Controller optimization • Harmonics filter • Integral reactive current compensation can be activated for the drive components • Automatic restart	• The mains sensor is the VSM10 Voltage Sensing Module Current is the line current 3-phase with line frequency
Servo control	• Asynchronous (induction) motor - Torque control with encoder - Speed control with/without encoder • Synchronous motor, linear motor and torque motor - Torque control with encoder - Speed control with encoder • For all motor types - Position control with encoder	• Linear/parabolic characteristic • Fixed-frequency characteristic (textile) • Independent voltage setpoint input	• Data set changeover • Setpoint input • Motor identification • Damping application • Reduced magnetic flux in the asynchronous motor for reducing the thermal load on the machine • Technology controller • Basic positioner	• The position control can be selected as a function module (stand-alone drives)

Function

Function modules

For stand-alone drive solutions, the additively activatable function module EPos can be called up on the SINAMICS S120 Control Units for the absolute/relative positioning of linear and rotary axes (Modulo) with motor encoders (indirect measuring system) or machine encoders (direct measuring system). The basic positioner can be used to resolve basic motion control tasks without additional external technological outlay from the drive itself.

Integrated safety functions

The Control Units support drive-autonomous Safety Integrated Basic functions and also licensed Safety Integrated Extended functions.

CompactFlash Card

The functions of the SINAMICS S120 drives are stored on a CompactFlash Card. This card contains the firmware and parameter settings for all drives in the form of a project. The CompactFlash Card can also hold additional projects, which means that the correct project can be accessed immediately when series machines of different types are commissioned. When the Control Unit has booted, the data on the CompactFlash Card are read and loaded to the work memory.

The firmware is organized in objects. Drive objects are used to implement open-loop and closed-loop control functions for Line Modules, Motor Modules, Power Modules and other system components connected by DRIVE-CLiQ.

Diagnostics optimally supported by trace function

The time characteristics of input and output variables associated with drive objects can be measured by the integrated trace function and displayed using the STARTER commissioning tool or on the SINUMERIK. Up to 4 signals can be recorded simultaneously. Recording can be triggered as a function of freely selectable boundary conditions, e.g. the value of an input or output variable.

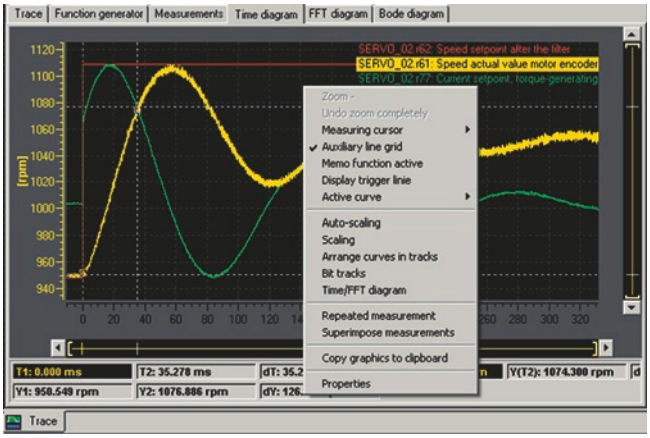

© Siemens 2022

Overview

CU310-2 PN and CU310-2 DP Control Units

The CU310-2 Control Unit that is designed for the communication and open-loop/closed-loop control functions of a SINAMICS S120 (AC/AC) is combined with the PM240-2 Power Module (can be used from firmware V4.8) to create a high-performance single-axis drive. A PROFINET (PN) variant and a PROFIBUS (DP) variant are available for fieldbus communication.

CompactFlash card for CU310-2 Control Units

The CompactFlash card contains the firmware and parameter settings. The CompactFlash card is plugged into the appropriate slot on the CU310-2 Control Unit.

A CU310-2 Control Unit can perform the communication, open-loop and closed-loop control functions for one Power Module. The performance expansion is not required in this case.

In addition to the firmware, the CompactFlash Card also contains licensing codes which are required to enable firmware options.

In addition to the Article No., the following firmware options can currently be ordered:

- Safety Integrated Extended Functions, order code **F01**
- High output frequency [1], order code **J01**
- DCB Extension, order code **U01**

After the appropriate license has been purchased via the WEB License Manager available on the Internet, firmware options can also be subsequently enabled.

Further information is available on the Internet at
www.siemens.com/automation/license

Design

The CU310-2 Control Unit has the following connections and interfaces as standard:

- Fieldbus interface
  - CU310-2 PN: 1 PROFINET interface with 2 ports (RJ45 sockets) with PROFIdrive V4 profile
  - CU310-2 DP: 1 PROFIBUS interface with PROFIdrive V4 profile
- 1 DRIVE-CLiQ socket for communication with the DRIVE-CLiQ motor or other DRIVE-CLiQ devices (e.g. Sensor Modules or Terminal Modules)
- 1 encoder evaluation for evaluating the following encoder signals
  - Incremental encoder TTL/HTL
  - SSI encoder without incremental signals
- 1 PE/protective conductor connection
- 1 connection for the electronics power supply via the 24 V DC supply connector
- 1 temperature sensor input for KTY84-130, Pt1000 or PTC (Pt1000 can be used from firmware V4.7 HF17)
- 3 parameterizable, fail-safe (can be used with firmware V4.5 and higher) digital inputs (floating) or alternatively 6 parameterizable digital inputs (floating).
  The fail-safe digital inputs can be routed, i.e. they can be routed via PROFIsafe to a higher-level controller.
- 5 parameterizable digital inputs (floating)
- 1 parameterizable, fail-safe digital output (floating) (can be used with firmware V4.5 or higher) or alternatively 1 digital output (floating)[2]
- 8 parameterizable bidirectional digital inputs/outputs (non-floating) [2]
- 1 analog input, either ± 10 V (resolution 12 bits + sign) or ±20 mA (11 bits + sign)
- 1 Ethernet interface (RJ45 socket) for commissioning and diagnostics
- 1 slot for the CompactFlash card on which firmware and parameters are stored
- 1 PM-IF interface for communication with the Power Modules in blocksize format
- 3 test sockets and one reference ground for commissioning support
- 1 interface to the BOP20 Basic Operator Panel

The status of the CU310-2 Control Unit is indicated using multicolor LEDs.

A BOP20 Basic Operator Panel can also be snapped directly onto the CU310-2 Control Unit for diagnostics.

As the firmware and parameter settings are stored on a plug-in CompactFlash card, the Control Unit can be changed without the need for software tools.

[1] For further information, see
https://support.industry.siemens.com/cs/document/104020669

[2] A 24 V supply voltage must be connected to terminal X124 for the digital outputs to be used.

© Siemens 2022

Integration

The CU310-2 Control Unit drives Power Modules in blocksize format via the PM-IF interface. DRIVE-CLiQ motors or Sensor Modules (SMC) can also be connected to the integrated DRIVE-CLiQ socket to permit the operation of motors without a DRIVE-CLiQ interface.

With the BOP20 Basic Operator Panel[1)], parameters can be changed directly on the device. The BOP20 Basic Operator Panel can also be snapped onto the CU310-2 Control Unit during operation to perform diagnostics.

The CU310-2 Control Unit and other connected components are commissioned and diagnosed with the STARTER commissioning tool. The CU310-2 Control Unit requires a CompactFlash card with firmware V4.4 or higher.

A CU310-2 PN Control Unit communicates with the higher-level control system using PROFINET IO and the PROFIdrive V4 profile.

The SINAMICS S120 drive system with the CU310-2 PN Control Unit then assumes the function of a PROFINET IO device and can perform the following functions:

- PROFINET IO device
- 100 Mbps full duplex
- Supports real-time classes of PROFINET IO:
  - RT (real-time)
  - IRT (isochronous real-time), minimum send clock 250 µs
- Connects to controls as PROFINET IO devices using PROFIdrive compliant with Specification V4
- Standard TCP/IP communication for engineering processes with the STARTER commissioning tool and for accessing the web server
- Integrated 2-port switch with two RJ45 sockets based on the ERTEC ASIC. The optimum topology (line, star, tree) can therefore be configured without additional external switches.

A 24 V supply voltage must be connected to terminal X124 for the digital outputs to be used. A CompactFlash card with firmware version V4.4 or higher is a mandatory requirement for operation of the CU310-2 Control Unit.

[1)] Not for machine tools.

© Siemens 2022

Technical specifications

	CU310-2 Control Unit
PROFINET **PROFIBUS**	6SL3040-1LA01-0AA0 6SL3040-1LA00-0AA0
Current requirement, max. At 24 V DC, without taking into account the digital outputs and DRIVE-CLiQ supply	0.35 A for CU310-2 + 0.5 A for PM240-2 Power Module
Conductor cross-section, max.	2.5 mm^2
Fuse protection, max.	20 A
Digital inputs	In accordance with IEC 61131-2 Type 1 5 floating digital inputs 8 bidirectional non-floating digital inputs/digital outputs 3 parameterizable, fail-safe digital inputs (floating) or alternatively 6 parameterizable digital inputs (floating) 5 bidirectional floating digital inputs/digital outputs
• Voltage	-3 ... +30 V
• Low level (an open digital input is interpreted as "low")	-3 ... +5 V
• High level	15 ... 30 V
• Current consumption at 24 V DC, typ.	3.5 mA
• Delay time of digital inputs [1], approx.	
- L → H	50 µs
- H → L	100 µs
• Delay time of high-speed digital inputs [1], approx. (high-speed digital inputs can be used for position detection)	
- L → H	5 µs
- H → L	50 µs
• Conductor cross-section, max.	1.5 mm^2
Digital outputs (continuously short-circuit proof)	8 bidirectional non-floating digital inputs/digital outputs
• Voltage	24 V DC
• Load current per digital output [2], max.	500 mA
• Delay time [1], typ./max.	
- L → H	150 µs/400 µs
- H → L	75 µs/100 µs
• Conductor cross-section, max.	1.5 mm^2

	CU310-2 Control Unit
PROFINET **PROFIBUS**	6SL3040-1LA01-0AA0 6SL3040-1LA00-0AA0
Analog input	The analog input can be switched between current input and voltage input
• As voltage input	-10 ... +10 V; R_i > 100 kΩ Resolution: 12 bit + sign (referred to the maximum range that can be resolved -11 ... +11 V)
• As current input	-20 ... +20 mA; R_i > 250 Ω Resolution: 11 bits + sign (referred to -22 ... +22 mA) Max. range that can be resolved: -44 ... +44 mA
Encoder evaluation	• Incremental encoder TTL/HTL • SSI encoder without incremental signals
• Input current range TTL/HTL	2 ... 10 mA (typ. 5 mA)
• Encoder supply	24 V DC/0.35 A or 5 V DC/0.35 A
• Encoder frequency, max.	300 kHz
• SSI baud rate	100 ... 250 kBaud
• Resolution absolute position SSI	30 bit
• Cable length, max.	
- TTL encoder	100 m (328 ft) (only bipolar signals permitted) [3]
- HTL encoder	100 m (328 ft) for unipolar signals 300 m (984 ft) for bipolar signals [3]
- SSI encoder	100 m (328 ft)
Power loss	<20 W
PE connection	M4 screw
Dimensions	
• Width	73 mm (2.87 in)
• Height	
- CU310-2 PN	191 mm (7.52 in)
- CU310-2 DP	187 mm (7.36 in)
• Depth	75 mm (2.95 in)
Net weight	0.95 kg (2.09 lb)
Certificate of suitability	cULus

[1] The specified delay times refer to the hardware. The actual reaction time depends on the time slot in which the digital input or output is processed.

[2] In order to use the digital outputs, an external 24 V power supply must be connected to terminal X124.

[3] Signal cables twisted in pairs and shielded.

© Siemens 2022

Selection and ordering data

Description	Article No.
CU310-2 PN Control Unit Without CompactFlash card	**6SL3040-1LA01-0AA0**
CU310-2 DP Control Unit Without CompactFlash card	**6SL3040-1LA00-0AA0**
CompactFlash card for CU310-2 PN and CU310-2 DP Control Units including Certificate of License	**6SL3054-0E■00-1BA0**
• and with safety license	**6SL3054-0E■00-1BA0-Z F01**
• and with high output frequency [1]	**6SL3054-0E■00-1BA0-Z J01**
• and with DCB Extension license (firmware V4.6 and higher)	**6SL3054-0E■00-1BA0-Z U01**
	↑
Firmware **V4.7**	**H**
Firmware **V4.8**	**J**
Licensing	
• Safety Integrated Extended Functions Upgrading license on a Compact-Flash card	**6SL3074-0AA10-0AA0**
• High output frequency [1] Upgrading license to enable frequencies above 550 Hz on a CompactFlash card	**6SL3074-0AA02-0AA0**
• Cogging torque compensation Option to compensate motor cogging torques at low speeds License is provided on a Compact-Flash card	**6SL3074-0AA15-0AA0**
• Advanced Position Control (APC) Option to dampen load oscillations by taking into account motor and load-side state variables License is provided on a Compact-Flash card	**6SL3074-0AA05-0AA0**
Accessories	
STARTER commissioning tool [2] On DVD-ROM	**6SL3072-0AA00-0AG0**
Accessories for re-ordering	
Dust protection blanking plugs (50 units) For DRIVE-CLiQ port	**6SL3066-4CA00-0AA0**

Information on connectors and cables is provided in

- Section MOTION-CONNECT connection systems
- Siemens Industry Mall: www.siemens.com/industrymall

[1] For further information, see https://support.industry.siemens.com/cs/document/104020669

[2] The STARTER commissioning tool is also available on the Internet at www.siemens.com/starter

© Siemens 2022

Overview

CU320-2 PN Control Unit

The communication, open-loop and closed-loop control functions for one or more Motor Modules and the Line Module are executed in a CU320-2 Control Unit. The CU320-2 Control Unit is essentially designed for multi-axis operation.

Overview (continued)

CompactFlash card for CU320-2 Control Units

The CompactFlash card contains the firmware and parameter settings. The CompactFlash card is plugged into the appropriate slot on the CU320-2 Control Unit.

A CU320-2 Control Unit can perform the communication, open-loop and closed-loop control functions for several Motor Modules. The computing capacity required increases in proportion to the number of connected Motor Modules and system components and in relation to the dynamic response required. For the CU320-2 Control Unit, the performance expansion is necessary from the 4th axis. The utilization of the CU320-2 Control Unit can be calculated with the SIZER for Siemens Drives engineering tool.

In addition to the firmware, the CompactFlash Card also contains licensing codes which are required to enable firmware options.

In addition to the Article No., the following firmware options can currently be ordered with or without performance expansion:

- Safety Integrated Extended Functions, order codes per axis **F01 to F06**
- Safety Integrated Advanced Functions, order codes per axis **A01 to A06**
- High output frequency [1], order code **J01**
- DCB Extension, order code **U01**

After the appropriate license has been purchased via the WEB License Manager available on the Internet, firmware options can also be subsequently enabled.

Further information is available on the Internet at
www.siemens.com/automation/license

[1] For further information, see
https://support.industry.siemens.com/cs/document/104020669

© Siemens 2022

Design

CU320-2 Control Units feature the following interfaces as standard:

- 4 DRIVE-CLiQ sockets for communication with other DRIVE-CLiQ devices, e.g. Motor Modules, Line Modules, Sensor Modules, Terminal Modules
- CU320-2 PN: 1 PROFINET interface with 2 ports (RJ45 sockets) with PROFIdrive V4 profile
- CU320-2 DP: 1 PROFIBUS interface with PROFIdrive V4 profile
- 12 parameterizable digital inputs (floating)
- 8 parameterizable bidirectional digital inputs/outputs (non-floating)
- 1 serial RS232 interface
- 1 interface for the BOP20 Basic Operator Panel[1)]
- 1 slot for the CompactFlash card on which firmware and parameters are stored
- 1 slot for mounting an option module (e.g. TB30 Terminal Board)
- CU320-2 DP: 2 rotary coding switches for manually setting the PROFIBUS address
- 1 Ethernet interface for commissioning and diagnostics
- 3 test sockets and one reference ground for commissioning support
- 1 connection for the electronics power supply via the 24 V DC supply connector
- 1 PE/protective conductor connection
- 1 ground connection

A shield connection for the signal cable shield of an option module is located on the CU320-2 Control Unit.

The available slot is used to optionally expand the interfaces, for example, to include additional terminals or for communication purposes.

The status of the CU320-2 Control Unit is indicated via multicolor LEDs.

As the firmware and parameter settings are stored on a plug-in CompactFlash card, the Control Unit can be changed without the need for software tools.

The CU320-2 Control Unit can be mounted on the side of the Line Module in booksize format via brackets integrated in a Line Module. The CU320-2 Control Unit can also be fixed to the wall of the control cabinet using the integrated fixing lugs. As the CU320-2 Control Unit is not as deep as the Line Modules, suitable spacers are available to increase the depth of the CU320-2 Control Unit to 270 mm (10.6 in).

Integration

DRIVE-CLiQ components such as Motor Modules and Active Line Modules can be connected to a CU320-2 Control Unit. The number of modules depends on the performance required, including duty type and additional functions.

The CU320-2 Control Unit and other connected components are commissioned and diagnosed with the STARTER commissioning tool.

A CompactFlash card with firmware version V4.4 or higher is a mandatory requirement for operation of the CU320-2 PN Control Unit.
A CompactFlash card with firmware version V4.3 or higher is a mandatory requirement for operation of the CU320-2 DP Control Unit.

Technical specifications

	CU320-2 Control Unit
PROFINET **PROFIBUS**	6SL3040-1MA01-0AA0 6SL3040-1MA00-0AA0
Current requirement, max. At 24 V DC, without taking account of digital outputs, expansion option slot and DRIVE-CLiQ supply	1 A
Conductor cross-section, max.	2.5 mm²
Fuse protection, max.	20 A
Digital inputs	In accordance with IEC 61131-2 Type 1 12 floating digital inputs 8 bidirectional non-floating digital inputs/digital outputs
• Voltage	-3 ... +30 V
• Low level (an open digital input is interpreted as "low")	-3 ... +5 V
• High level	15 ... 30 V
• Current consumption at 24 V DC, typ.	3.5 mA
• Delay time of digital inputs [1)], approx.	
- L → H	5 µs
- H → L	50 µs
• Conductor cross-section, max.	1.5 mm²
Digital outputs Continuously short-circuit proof	8 bidirectional non-floating digital inputs/digital outputs
• Voltage	24 V DC
• Load current per digital output, max.	500 mA
• Delay time [2)], typ./max.	
- L → H	150 µs/400 µs
- H → L	75 µs/100 µs
• Conductor cross-section, max.	1.5 mm²
Power loss	24 W
PE connection	M5 screw
Ground connection	M5 screw
Dimensions	
• Width	50 mm (1.97 in)
• Height	300 mm (11.81 in)
• Depth	226 mm (8.90 in)
Net weight	2.3 kg (4.5 lb)
Certificate of suitability	cULus

1) Not for machine tools.

2) The specified delay times refer to the hardware. The actual reaction time depends on the time slot in which the digital input or output is processed.

© Siemens 2022

Selection and ordering data

Description	Article No.
CU320-2 PN Control Unit Without CompactFlash card	**6SL3040-1MA01-0AA0**
CU320-2 DP Control Unit Without CompactFlash card	**6SL3040-1MA00-0AA0**
CompactFlash card for CU320-2 Control Unit without Safety license	
- Without performance expansion	**6SL3054-0E■00-1BA0**
- With performance expansion firmware option	**6SL3054-0E■01-1BA0**
CompactFlash card for CU320-2 Control Unit with Safety license	
• For **1 axis**	
- Without performance expansion	**6SL3054-0E■00-1BA0-Z F01**
- With performance expansion firmware option	**6SL3054-0E■01-1BA0-Z F01**
• For **2 axes**	
- Without performance expansion	**6SL3054-0E■00-1BA0-Z F02**
- With performance expansion firmware option	**6SL3054-0E■01-1BA0-Z F02**
• For **3 axes**	
- Without performance expansion	**6SL3054-0E■00-1BA0-Z F03**
- With performance expansion firmware option	**6SL3054-0E■01-1BA0-Z F03**
• For **4 axes**	
- With performance expansion firmware option	**6SL3054-0E■01-1BA0-Z F04**
• For **5 axes**	
- With performance expansion firmware option	**6SL3054-0E■01-1BA0-Z F05**
• For **6 axes**	
- With performance expansion firmware option	**6SL3054-0E■01-1BA0-Z F06**
• and with high output frequency [1]	**6SL3054-0E■00-1BA0-Z J01**
• and with DCB Extension license (firmware V4.6 and higher)	**6SL3054-0E■01-1BA0-Z U01**
	↑
Firmware **V4.7**	**H**
Firmware **V4.8**	**J**

Description	Article No.
Licensing	
• Option Performance Extension including Certificate of License for additional licensing of a CompactFlash Card	**6SL3074-0AA01-0A■0**
• Safety Integrated Extended Functions Upgrading license for one axis on a CompactFlash card	**6SL3074-0AA10-0A■0**
• High output frequency [1] Upgrading license to enable frequencies above 550 Hz for all axes on a CompactFlash card	**6SL3074-0AA02-0A■0**
• Cogging torque compensation Option to compensate motor cogging torques at low speeds License for one axis is provided on a CompactFlash card	**6SL3074-0AA15-0A■0**
• Advanced Position Control (APC) Option to dampen load oscillations by taking into account motor and load-side state variables License for one axis is provided on a CompactFlash card	**6SL3074-0AA05-0A■0**
	↑
• Certificate of License on paper	**A**
• Certificate of License on paper (Technology Extension and DCB Extension	**B**
• Electronic Certificate of License (eCol)	**H**
Accessories	
Spacers (2 units) Increases the depth of the CU320-2 Control Unit to 270 mm (10.63 in) (if the integrated brackets are not to be used, but the depth still has to be 270 mm (10.63 in)	**6SL3064-1BB00-0AA0**
STARTER commissioning tool [2]	**6SL3072-0AA00-0AG0**
Accessories for re-ordering	
Dust protection blanking plugs (50 units) For DRIVE-CLiQ port	**6SL3066-4CA00-0AA0**

Information on connectors and cables is provided in
- Section MOTION-CONNECT connection systems
- Siemens Industry Mall: www.siemens.com/industrymall

[1] For further information, see https://support.industry.siemens.com/cs/document/104020669

[2] The STARTER commissioning tool is also available on the Internet at www.siemens.com/starter

© Siemens 2022

Overview

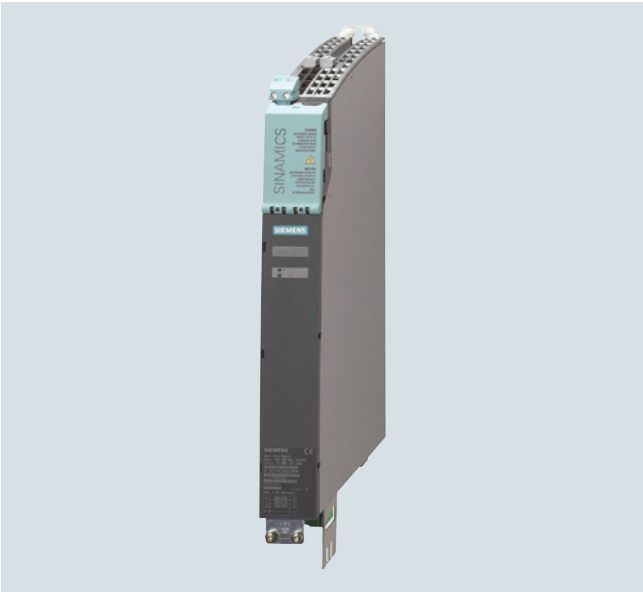

Smart Line Modules are stall-protected, line-commutated infeed/regenerative feedback units (diode bridge for incoming supply; stall-protected, line-commutated regenerative feedback via IGBTs) with 100 % continuous regenerative feedback power. The regenerative feedback capability of the modules can be deactivated by means of a digital input (Smart Line Modules 5 kW and 10 kW) or by means of parameterization (Smart Line Modules 16 kW, 36 kW and 55 kW). Smart Line Modules are designed for connection to grounded TN/TT systems and non-grounded IT systems.

The DC link is pre-charged via integrated precharging resistors.

The associated line reactor is required for operating a Smart Line Module.

Design

The Smart Line Modules in booksize format feature the following connections and interfaces as standard:

- 1 power connection via screw-type terminals
- 1 connection for the 24 V DC electronics power supply via the 24 V terminal adapter included in the scope of supply
- 1 DC link connection via integrated DC link busbars
- 2 PE (protective earth) connections
- 2 digital inputs (only for Smart Line Modules 5 kW and 10 kW)
- 1 digital output (only for Smart Line Modules 5 kW and 10 kW)
- 3 DRIVE-CLiQ sockets (only for Smart Line Modules 16 kW, 36 kW and 55 kW)
- 1 temperature sensor input for KTY84-130, Pt1000 or PTC (only for Smart Line Modules 16 kW, 36 kW and 55 kW, Pt1000 can be used from firmware V4.7 HF17)

The status of the Smart Line Modules is indicated via two multicolor LEDs.

The signal cable shield can be connected to the Line Module by means of a shield connection clamp, e.g. Weidmüller type KLBÜ 3-8 SC.

Design (continued)

The scope of supply of the Smart Line Modules includes:

- DRIVE-CLiQ cable for connecting the module to the adjacent Control Unit on the left with the drive control, length 0.11 m (4.33 in) (only for Smart Line Modules 16 kW, 36 kW and 55 kW)
- 2 blanking plugs for closing unused DRIVE-CLiQ sockets (only for Smart Line Modules 16 kW, 36 kW and 55 kW)
- DRIVE-CLiQ cable (length depends on Smart Line Module width) for connection to the adjacent Motor Module, length = width of Smart Line Module + 0.11 m (4.33 in)
- Jumper for connecting the 24 V DC busbar to the adjacent Motor Module
- 24 V terminal adapter (X24)
- Connector X21 for digital inputs and outputs
- Connector X22 for digital inputs and outputs (only for Smart Line Modules 5 kW and 10 kW)
- Connector X1 for line connection (only for Smart Line Modules 5 kW and 10 kW)
- 1 set of warning labels in 30 languages

Technical specifications

Article No.	6SL313...
Product designation	Smart Line Module in booksize format
Line voltage (up to 2000 m (6562 ft) above sea level)	380 ... 480 V 3 AC ±10 % (in operation -15 % <1 min)
Line frequency	47 ... 63 Hz
SCCR (short-circuit current rating)	65 kA in conjunction with the recommended Class J fuse, or circuit breaker according to UL489 / CSA 22.2 No. 5-02 see recommended line-side components
Line power factor at rated power	
• Fundamental power factor (cos φ_1)	>0.96
• Total (λ)	0.65 ... 0.9
Overvoltage category according to EN 60664-1	Class III
DC link voltage, approx.	1.35 x line voltage[1)]
Electronics power supply	24 V DC -15 %/+20 %
Radio interference suppression	
• Standard	No radio interference suppression
• With line filter	Category C2 to EN 61800-3 Total cable length up to 350 m (1148 ft) (shielded)
Type of cooling	Internal air cooling (power units with increased air cooling using an integrated fan)
Permissible ambient and coolant temperature (air) during operation for line-side components, Line Modules and Motor Modules	0 ... 40 °C (32 ... 104 °F) without derating, > 40 ... 55 °C (104 ... 131 °F), see derating characteristics
Installation altitude	Up to 1000 m (3281 ft) above sea level without derating, > 1000 ... 4000 m (3281 ... 13124 ft) above sea level, see derating characteristics
Declarations of conformity	CE (Low Voltage and EMC Directives)
Certificate of suitability	cULus

[1)] The DC link voltage is maintained at the mean value of the rectified line voltage.

© Siemens 2022

Technical specifications (continued)

Article No.		6SL3130-6AE15-0AB1	6SL3130-6AE21-0AB1	6SL3130-6TE21-6AA4	6SL3130-6TE23-6AA3	6SL3130-6TE25-5AA3
Product designation		Smart Line Module in booksize format with internal air cooling				
Line voltage 380 ... 480 V 3 AC						
Infeed/regenerative feed-back power						
• Rated power P_{rated}						
- At 380 V 3 AC	kW	**5**	**10**	**16**	**36**	**55**
- At 460 V 3 AC [2]	(hp)	(5)	(10)	(18)	(40)	(60)
• For S6 duty (40%) P_{S6}	kW	6.5	13	21	47	71
• P_{max}	kW	10	20	35	70	91
DC link current						
• At 540/600 V DC	A	9.3/8.3	18.5/16.6	30/27	67/60	105/92
• For S6 duty (40 %)	A	11	22	35	79	138
• Maximum	A	16.6	33.2	59	118	178
Input current						
• Rated current at 380/400/480 V 3 AC	A	8.6/8.1/6.7	17/16.2/12.8	29/27.5/24.5	62/59/51	94/90/77
• For S6 duty (40 %) at 400 V	A	10.6	21.1	35	76	106
• At 400 V max.	A	15.7	31.2	57.5	112	130
Current requirement 24 V DC electronics power supply, max.	A	0.8	0.9	0.95	1.5	1.9
Current carrying capacity						
• 24 V DC busbars	A	20	20	20	20	20
• DC link busbars	A	100	100	100	200	200
DC link capacitance						
• Smart Line Module	µF	220	330	710	1410	1880
• Drive line-up, max.	µF	6000	6000	20000	20000	20000
Power loss [1]	kW	0.08	0.14	0.19	0.406	0.666
Cooling air requirement	m^3/s (ft^3/s)	0.008 (0.3)	0.008 (0.3)	0.016 (0.6)	0.031 (1.1)	0.044 (1.5)
Sound pressure level L_{pA} (1 m)	dB	<60	<60	<60	<65	<60
Line connection U1, V1, W1		Screw-type terminals (X1)	Screw-type terminals (X1)	Screw-type terminals (X1)	M6 screw studs (X1)	M6 screw studs (X1)
• Conductor cross-section	mm^2	2.5 ... 6	2.5 ... 6	2.5 ... 10	2.5 ... 50	2.5 ... 95
Shield connection		Shield connection plate integrated into the connector	Shield connection plate integrated into the connector	Shield connection plate integrated into the connector	See Accessories	See Accessories
PE connection		M5 screw	M5 screw	M5 screw	M6 screw	M6 screw
Cable length, max. (total of all motor power cables and DC link)						
• Shielded	m (ft)	350 (1148)	350 (1148)	630 (2067)	630 (2067)	1000 (3281)
• Unshielded	m (ft)	560 (1837)	560 (1837)	850 (2789)	850 (2789)	1500 (4922)
Degree of protection		IP20	IP20	IP20	IP20	IP20
Dimensions						
• Width	mm (in)	50 (1.97)	50 (1.97)	100 (3.94)	150 (5.91)	200 (7.87)
• Height	mm (in)	380 (14.96)	380 (14.96)	380 (14.96)	380 (14.96)	380 (14.96)
• Depth	mm (in)	270 (10.63)	270 (10.63)	270 (10.63)	270 (10.63)	270 (10.63)
Net weight	kg (lb)	4.7 (10.4)	4.8 (10.6)	7 (15.4)	10 (22.0)	16 (35.3)

[1] Power loss of Smart Line Module at rated output including losses of 24 V DC electronics power supply.

[2] Nominal hp ratings are provided for ease of assigning components only. The Line Module outputs are dependent on the Motor Module loading and are to be dimensioned accordingly.

© Siemens 2022

Selection and ordering data

Rated power kW (hp)	**Smart Line Module in booksize format** Article No.
Line voltage 380 ... 480 V 3 AC	
5 (5)	**6SL3130-6AE15-0AB1**
10 (10)	**6SL3130-6AE21-0AB1**
16 (18)	**6SL3130-6TE21-6AA4**
36 (40)	**6SL3130-6TE23-6AA3**
55 (60)	**6SL3130-6TE25-5AA3**

Description	Article No.
Accessories	
Shield connection plate For Line Modules and Motor Modules in booksize format	
• with a width of 150 mm (5.91 in)	**6SL3162-1AF00-0AA1**
• with a width of 200 mm (7.87 in)	**6SL3162-1AH01-0AA0**
DC link rectifier adapter For direct infeed of DC link voltage	
• Screw-type terminals 0.5 ... 10 mm^2 For Line Modules and Motor Modules in booksize format with a width of 50 mm (1.97 in), 75 mm (2.95 in) and 100 mm (3.94 in)	**6SL3162-2BD00-0AA0**
• Screw-type terminals 35 ... 95 mm^2 For Line Modules and Motor Modules in booksize format with a width of 150 mm (5.91 in), 200 mm (7.87 in) and 300 mm (11.81 in)	**6SL3162-2BM00-0AA0**
DC link adapter (2 units) For multi-tier configuration Screw-type terminals 35 ... 95 mm^2 For all Line Modules and Motor Modules in booksize format	**6SL3162-2BM01-0AA0**

Description	Article No.
Accessories for re-ordering	
24 V terminal adapter For all Line Modules and Motor Modules in booksize format	**6SL3162-2AA00-0AA0**
24 V jumper For connection of the 24 V busbars (for booksize format)	**6SL3162-2AA01-0AA0**
Terminal Kit (Plug-in terminals, DRIVE-CLiQ jumper (length = module width + 60 mm (2.36 in)), dust protection blanking plugs) For DRIVE-CLiQ port For Smart Line Modules with a width of	
• 50 mm (1.97 in)	**6SL3163-8KB00-0AA1**
• 100 mm (3.94 in)	**6SL3163-8FD00-0AA0**
• 150 mm (5.91 in)	**6SL3163-8GF00-0AA0**
• 200 mm (7.87 in)	**6SL3163-8HH00-0AA0**
Warning labels in 30 languages This label set can be glued over the standard German or English labels to provide warnings in other languages. One set of labels is supplied with the devices. One sign in each of the following languages is provided in each set: BG, CN, CZ, DE, DK, EE, ES, FI, FR, GB, GR, HU, IE, IS, IT, JP, KR, LT, LV, MT, NL, NO, PL, PT, RO, RU, SE, SI, SK, TR	**6SL3166-3AB00-0AA0**
Dust protection blanking plugs (50 units) For DRIVE-CLiQ port	**6SL3066-4CA00-0AA0**

© Siemens 2022

Characteristic curves

Overload capability

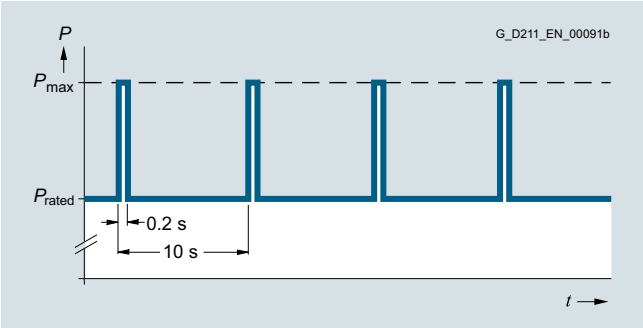

Duty cycle with previous load

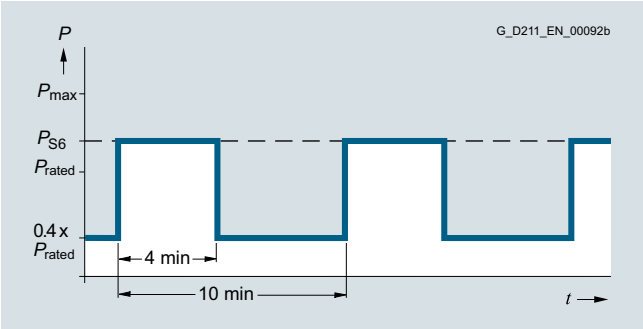

S6 duty cycle with previous load

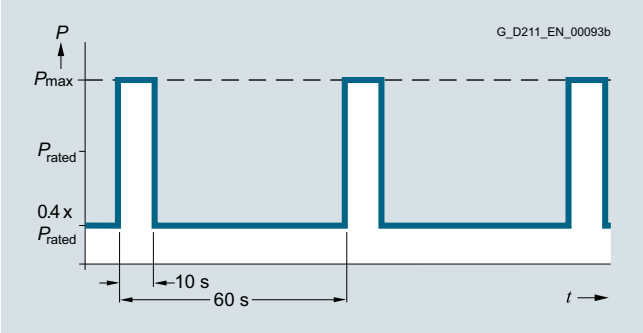

S6 duty cycle with previous load

Derating characteristics

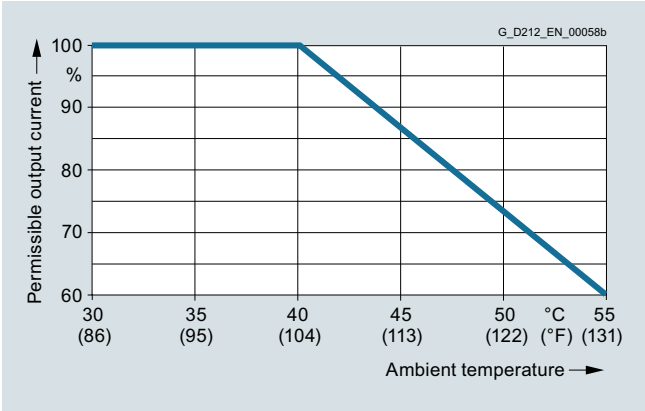

Output power as a function of ambient temperature

Installation altitude

- >1000 ... 4000 m (3281 ... 13124 ft) above sea level
  - Reduction of the output current by 10 % per 1000 m (3281 ft), or
  - Reduction of the ambient temperature by 5 °C (9 °F) per 1000 m (3281 ft)
- >2000 ... 4000 m (6562 ... 13124 ft) above sea level
  - Operation on line supply systems with grounded neutral point, or
  - Operation with an isolating transformer with secondary grounded neutral point

© Siemens 2022

Overview

Line reactors are required in order for the Smart Line Modules to function. The use of other makes of line reactor can lead to malfunctions or irreparable damage to equipment.

Selection and ordering data

Suitable for Smart Line Module Rated power of the Smart Line Module kW (hp)	Booksize format	**Line reactor** Article No.
Line voltage 380 ... 480 V 3 AC		
5 (5)	6SL3130-6AE15-0AB1	**6SL3000-0CE15-0AA0**
10 (10)	6SL3130-6AE21-0AB1	**6SL3000-0CE21-0AA0**
16 (18)	6SL3130-6TE21-6AA4	**6SL3100-0EE21-6AA0**
36 (40)	6SL3130-6TE23-6AA3	**6SL3000-0CE23-6AA0**
55 (60)	6SL3130-6TE25-5AA3	**6SL3000-0CE25-5AA0**

Technical specifications

Article No.		6SL3000-0CE15-0AA0	6SL3000-0CE21-0AA0	6SL3100-0EE21-6AA0	6SL3000-0CE23-6AA0	6SL3000-0CE25-5AA0
Product designation		Line reactor				
Line voltage 380 ... 480 V 3 AC						
Rated current	A	14	28	28	69	103
Power loss	kW	0.062	0.116	0.075	0.17	0.19
Line/load connection 1U1, 1V1, 1W1 / 1U2, 1V2, 1W2		Screw-type terminals	Screw-type terminals	Screw-type terminals	Screw-type terminals	Screw-type terminals
• Conductor cross-section	mm^2	4	10	10	35	70
PE connection		M4 screw	M4 screw	M6 screw studs according to DIN 46234	M6 screw studs according to DIN 46234	M8 screw studs according to DIN 46234
Degree of protection		IP20	IP20	IP20	IP20	IP20
Dimensions						
• Width	mm (in)	150 (5.91)	177 (6.97)	219 (8.62)	225 (8.86)	300 (11.8)
• Height	mm (in)	175 (6.89)	196 (7.72)	176 (6.93)	235 (9.25)	280 (11.0)
• Depth	mm (in)	66.5 (2.62)	86 (3.39)	120 (4.72)	224 (8.82)	290 (11.42)
Net weight	kg (lb)	3.7 (8.16)	7.5 (16.5)	10.7 (23.6)	17 (37.5)	36 (79.4)
Certificate of suitability		cURus	cURus	cURus	cURus	cURus
Suitable for Smart Line Module in booksize format	Type	6SL3130-6AE15-0AB1	6SL3130-6AE21-0AB1	6SL3130-6TE21-6AA4	6SL3130-6TE23-6AA3	6SL3130-6TE25-5AA3
• Rated power of the Smart Line Module	kW (hp)	5 (5)	10 (10)	16 (18)	36 (40)	55 (60)

© Siemens 2022

Overview

In plants with stringent EMC requirements, line filters work together with line reactors to restrict the conducted interference emanating from the Power Modules to the limit values of Class A1 as defined in EN 55011 and Category C2 as defined in EN 61800-3. Line filters are only suitable for direct connection to TN line systems.

The use of other makes of line reactor can lead to malfunctions or irreparable damage to equipment.

Selection and ordering data

Suitable for Smart Line Module Rated power of the Smart Line Module kW (hp)	Booksize format	**Line filter** Article No.
Line voltage 380 ... 480 V 3 AC		
5 (5)	6SL3130-6AE15-0AB1	**6SL3000-0HE15-0AA0**
10 (10)	6SL3130-6AE21-0AB1	**6SL3000-0HE21-0AA0**
16 (18)	6SL3130-6TE21-6AA4	**6SL3000-0BE21-6DA0**
36 (40)	6SL3130-6TE23-6AA3	**6SL3000-0BE23-6DA1**
55 (60)	6SL3130-6TE25-5AA3	**6SL3000-0BE25-5DA0**

Technical specifications

Article No.		6SL3000-0HE15-0AA0	6SL3000-0HE21-0AA0	6SL3000-0BE21-6DA0	6SL3000-0BE23-6DA1	6SL3000-0BE25-5DA0
Product designation		Line filter				
Line voltage 380 ... 480 V 3 AC						
Rated current	A	12	24	36	74	105
Power loss	kW	0.02	0.02	0.016	0.026	0.043
Line/load connection L1, L2, L3 / U, V, W		Screw-type terminals	Screw-type terminals	Screw-type terminals	Screw-type terminals	Screw-type terminals
• Conductor cross-section	mm^2	10	10	10	35	50
PE connection		M6 screw studs according to DIN 46234	M6 screw studs according to DIN 46234	M6 screw studs according to DIN 46234	M6 screw studs according to DIN 46234	M8 screw studs according to DIN 46234
Degree of protection		IP20	IP20	IP20	IP20	IP20
Dimensions						
• Width	mm (in)	60 (2.36)	60 (2.36)	50 (1.97)	75 (2.95)	100 (3.94)
• Height	mm (in)	285 (11.22)	285 (11.22)	429 (16.89)	433 (17.05)	466 (18.35)
• Depth	mm (in)	122 (4.80)	122 (4.80)	226 (8.90)	226 (8.90)	226 (8.90)
Net weight	kg (lb)	2.1 (4.63)	2.3 (5.07)	5 (11.0)	7.5 (16.5)	11.5 (25.4)
Certificate of suitability		cURus	cURus	cURus	cURus	cURus
Suitable for Smart Line Module in booksize format	Type	6SL3130-6AE15-0AB1	6SL3130-6AE21-0AB1	6SL3130-6TE21-6AA4	6SL3130-6TE23-6AA3	6SL3130-6TE25-5AA3
• Rated power of the Smart Line Module	kW (hp)	5 (5)	10 (10)	16 (18)	36 (40)	55 (60)

© Siemens 2022

Overview

Suitable line-side power components are assigned depending on the power rating of the Smart Line Module.

The tables below list recommended components.

Additional information about the line-side power components can be found in the Industry Mall.

Assignment of line-side power components to Smart Line Modules in booksize format

Suitable for Smart Line Module		Line contactor	**Circuit breaker IEC 60947**	Circuit breaker UL489/CSA C22.2 No. 5-02	**Main switch**
Rated power	Booksize format		Article No.		
kW (hp)	Type	Type	Type	Type	Article No.
Line voltage 380 ... 480 V 3 AC					
5 (5)	6SL3130-6AE15-0AB1	**3RT2023...*)**	**3RV2021-4BA10**	3VL1102-2KM30-.... *)	**3VA5120-6ED31**
10 (10)	6SL3130-6AE21-0AB1	**3RT2026...*)**	**3RV2031-4UA10**	3VL1135-2KM30-.... *)	**3VA5135-6ED31**
16 (18)	6SL3130-6TE21-6AA4	**3RT2028...*)**	**3RV2031-4UA10**	3VL1135-2KM30-.... *)	**3VA5140-6ED31**
36 (40)	6SL3130-6TE23-6AA3	**3RT2038...*)**	**3RV2041-4YA10**	3VL2508-2KN30-.... *)	**3VA5190-6ED31**
55 (60)	6SL3130-6TE25-5AA3	**3RT1054...*)**	**3VA1112-5EF36-0AA0**	3VL2512-2KN30-.... *)	**3VA5212-7ED31**

Suitable for Smart Line Module		**Fuse switch disconnector**	**Switch disconnector with fuse holders**	**LV HRC fuse (gL/gG)**			UL/CSA fuse, Class J [1] Available from: Mersen www.ep.mersen.com		
Rated power	Booksize format			Rated current	Size		Rated current	Size	
kW (hp)	Type	Article No.	Article No.	A		Article No.	A	mm (in)	Reference No.
Line voltage 380 ... 480 V 3 AC									
5 (5)	6SL3130-6AE15-0AB1	**3NP1123-1CA20**	**3KL5030-1GB01**	16	000	**3NA3805**	17.5	21 × 57 (0.83 × 2.24)	AJT17-1/2
10 (10)	6SL3130-6AE21-0AB1	**3NP1123-1CA20**	**3KL5030-1GB01**	35	000	**3NA3814**	35	27 × 60 (1.06 × 2.36)	AJT35
16 (18)	6SL3130-6TE21-6AA4	**3NP1123-1CA20**	**3KL5030-1GB01**	35	000	**3NA3814**	35	27 × 60 (1.06 × 2.36)	AJT35
36 (40)	6SL3130-6TE23-6AA3	**3NP1123-1CA20**	**3KL5230-1GB01**	80	000	**3NA3824**	80	29 × 117 (1.14 × 4.61)	AJT80
55 (60)	6SL3130-6TE25-5AA3	**3NP1143-1DA20**	**3KL5530-1GB01**	125	000	**3NA3132**	125	41 × 146 (1.61 × 5.75)	AJT125

*) See Industry Mall for Article No. supplements.

[1] Not suitable for 3NP and 3KL switch disconnectors.

© Siemens 2022

Overview

Active Line Module in booksize format

Active Line Modules are self-commutated infeed/regenerative feedback units (with IGBTs in the infeed and regenerative feedback directions) that generate a controlled DC link voltage. This means that the connected Motor Modules are decoupled from the line voltage. Line voltage fluctuations within the permissible supply tolerances have no effect on the motor voltage. Active Line Modules are designed for connection to grounded star (TN, TT) and non-grounded symmetrical (IT) supply systems.

The DC link is pre-charged via integrated precharging resistors.

In order to operate an Active Line Module, an associated Active Interface Module is required.

Design

The Active Line Modules in booksize format feature the following connections and interfaces as standard:

- 1 power connection via screw-type terminals
- 1 connection for the 24 V DC electronics power supply via the 24 V terminal adapter included in the scope of supply
- 1 DC link connection via integrated DC link busbars
- 3 DRIVE-CLiQ sockets
- 2 PE (protective earth) connections
- 1 temperature sensor input for KTY84-130, Pt1000 or PTC (Pt1000 can be used from firmware V4.7 HF17)

The status of the Active Line Modules is indicated via two multi-color LEDs.

For the Active Line Module with a width of 100 mm (3.94 in), the shield of the power connection cable can be connected to the integrated shield connection plate by means of a shield connection clamp or hose clip, e.g. Weidmüller type KLBÜ CO 4. The shield connection clamp must not be used as a strain relief mechanism. Shield connection sets are available for the 150 mm (5.91 in), 200 mm (7.87 in) and 300 mm (11.81 in) wide Active Line Modules.

The signal cable shield can be connected to the Active Line Module by means of a shield connection clamp, e.g. Weidmüller type KLBÜ 3-8 SC.

The scope of supply of the Active Line Modules includes:

- DRIVE-CLiQ cable for connection to the adjacent Control Unit on the left for drive control, length 0.11 m (4.33 in)
- DRIVE-CLiQ cable (length depends on Active Line Module width) for connection to the adjacent Motor Module, length = width of Active Line Module + 0.11 m (4.33 in)
- 2 blanking plugs for sealing unused DRIVE-CLiQ sockets
- Jumper for connecting the 24 V DC busbar to the adjacent Motor Module
- 24 V terminal adapter (X24)
- Connector X21 for digital inputs
- Fan insert for Active Line Modules of 80 kW (100 hp) and 120 kW (150 hp) (the voltage for the fan unit is supplied by the Active Line Module)
- 1 set of warning labels in 30 languages

Integration

The Active Line Module receives its control information via DRIVE-CLiQ from:

- CU320-2 Control Unit
- SINUMERIK 840D sl with
  - NCU 710.3B PN
  - NCU 720.3B PN
  - NCU 730.3B PN
  - Numeric Control Extensions NX10.3/NX15.3

© Siemens 2022

Technical specifications

Article No.	6SL3130-7TE...
Product designation	Active Line Module in booksize format
Line voltage (up to 2000 m (6562 ft) above sea level)	380 ... 480 V 3 AC ±10 % (in operation -15 % <1 min)
Line frequency	47 ... 63 Hz
SCCR (short-circuit current rating)	65 kA in conjunction with the recommended Class J fuse, or circuit breaker according to UL489 / CSA 22.2 No. 5-02 see recommended line-side components
Line power factor	
• Active mode	
- Fundamental power factor (cos φ_1)	1 (factory setting), can be altered by inputting a reactive current setpoint
- Total (λ)	1 (factory setting)
• Smart Mode	
- Fundamental power factor	>0.96
- Overall	0.65 ... 0.9
Overvoltage category to EN 60664-1	Class III
DC link voltage V_d	In Active Mode, the DC link voltage is regulated and can be adjusted as a voltage decoupled from the line voltage. In Smart Mode, the DC link voltage is kept in proportion to the line voltage at the mean rectified line voltage value. Factory setting for DC link voltage: 380 ... 400 V 3 AC: 600 V (Active Mode) 400 ... 415 V 3 AC: 625 V (Active Mode) 416 ... 480 V 3 AC: 1.35 × line voltage (Smart Mode) [1]
Electronics power supply	24 V DC -15 %/+20 %

Article No.	6SL3130-7TE...
Product designation	Active Line Module in booksize format
Radio interference suppression	
• Standard (Active Line Module + Active Interface Module)	Category C3 to EN 61800-3 up to 350 m (1148 ft) total cable length
• With line filter	Category C2 to EN 61800-3 up to 350 m (1148 ft) total cable length Category C3 to EN 61800-3 from 350 m to 1000 m (1148 ... 3281 ft) total cable length
Type of cooling	Internal air cooling (power units with increased air cooling by built-in fan)
Permissible ambient and coolant temperature (air) during operation for line-side components, Line Modules and Motor Modules	0 ... 40 °C (32 ... 104 °F) without derating, > 40 ... 55 °C (104 ... 131 °F), see derating characteristics
Installation altitude	Up to 1000 m (3281 ft) above sea level without derating, > 1000 ... 4000 m (3281 ... 13124 ft) above sea level, see derating characteristics
Declarations of conformity	CE (Low Voltage and EMC Directives)
Certificate of suitability	cULus

[1] Active Mode can also be selected if the connected motors are suitable for > 650 V DC.

© Siemens 2022

Technical specifications (continued)

Article No.		6SL3130-7TE21-6AA4	6SL3130-7TE23-6AA3	6SL3130-7TE25-5AA3	6SL3130-7TE28-0AA3	6SL3130-7TE31-2AA3
Product designation		Active Line Module in booksize format with internal air cooling				
Line voltage 380 ... 480 V 3 AC						
Infeed/regenerative feedback power						
• Rated power P_{rated}						
- At 380 V 3 AC	kW	**16**	**36**	**55**	**80**	**120**
- At 460 V 3 AC [5]	(hp)	(18)	(40)	(60)	(100)	(150)
• For S6 duty P_{S6} (40 %)	kW	21	47	71	106	145
• P_{max}	kW	35	70	91 (110 [1])	131	175
DC link current						
• At 600 V DC	A	27	60	92	134	200
• For S6 duty (40 %)	A	35	79	121	176	244
• Maximum	A	59	117	152 (176 [1])	218	292
Input current						
• Rated current at 380/400/480 V 3 AC	A	26/25/21	58/55/46	88/84/70	128/122/102	192/182/152
• For S6 duty (40 %) at 400 V	A	32	71	108	161	220
• At 400 V max.	A	54	107	139 (168 [1])	200	267
Current requirement 24 V DC electronics power supply, max.	A	1.1	1.5	1.9	2	2.5
Current carrying capacity						
• 24 V DC busbars	A	20	20	20	20	20
• DC link busbars	A	100	200	200	200	200
DC link capacitance						
• Active Line Module	µF	710	1410	1880	2820	3995
• Drive line-up, max.	µF	20000	20000	20000	20000	20000
Power loss [2]	kW	0.28	0.67	0.95	1.38	2.24
Cooling air requirement	m^3/s (ft^3/s)	0.016 (0.57)	0.031 (1.09)	0.044 (0.155)	0.144 (5.09)	0.144 (5.09)
Sound pressure level L_{pA} (1 m)	dB	<60	<65	<60	<73	<73
Line connection U1, V1, W1		Screw-type terminals (X1)	M6 screw studs (X1)	M8 screw studs (X1)	M8 screw studs (X1)	M8 screw studs (X1)
• Conductor cross-section, max.	mm^2	2.5 ... 10	2.5 ... 50	2.5 ... 95, 2 × 35	2.5 ... 120, 2 × 50	2.5 ... 120, 2 × 50
Shield connection		Integrated in the connector	See Accessories	See Accessories	See Accessories	See Accessories
PE connection		M5 screw	M6 screw	M6 screw	M8 screw	M8 screw
Cable length, max. Total of all motor cables and DC link						
• Shielded	m (ft)	630 (2067) [3]	630 (2067) [3]	1000 (3281)	1000 (3281)	1000 (3281)
• Unshielded	m (ft)	850 (2789)	850 (2789)	1500 (4922)	1500 (4922)	1500 (4922)
Degree of protection		IP20	IP20	IP20	IP20	IP20
Dimensions						
• Width	mm (in)	100 (3.94)	150 (5.91)	200 (7.87)	300 (11.81)	300 (11.81)
• Height	mm (in)	380 (14.96)	380 (14.96)	380 (14.96)	380 (14.96)	380 (14.96)
- With fan [4]	mm (in)	–	–	–	629 (24.76)	629 (24.76)
• Depth	mm (in)	270 (10.63)	270 (10.63)	270 (10.63)	270 (10.63)	270 (10.63)
Net weight	kg (lb)	7 (15.4)	10 (22.0)	16 (35.3)	23 (50.7)	23 (50.7)

[1] Higher peak output is possible in combination with the Active Interface Module 6SL3100-0BE25-5AB0 (for operating cycle constraints, see SINAMICS S120 Manual).

[2] Power loss of Active Line Module at rated power including losses of 24 V DC electronics power supply.

[3] Max. cable lengths in combination with Active Interface Module and Basic Line Filter (Category C3 according to EN 61800-3).

[4] The fan is supplied together with the Active Line Module and must be installed before the Active Line Module is commissioned.

[5] Nominal hp ratings are provided for ease of assigning components only. The Line Module outputs are dependent on the Motor Module loading and are to be dimensioned accordingly.

© Siemens 2022

Selection and ordering data

Rated power kW (hp)	**Active Line Module in booksize format** Article No.
Line voltage 380 ... 480 V 3 AC	
16 (18)	**6SL3130-7TE21-6AA4**
36 (40)	**6SL3130-7TE23-6AA3**
55 (60)	**6SL3130-7TE25-5AA3**
80 (100)	**6SL3130-7TE28-0AA3**
120 (150)	**6SL3130-7TE31-2AA3**

Description	Article No.
Accessories	
Shield connection plate For Line Modules and Motor Modules in booksize format with a width of	
• 150 mm (5.91 in)	**6SL3162-1AF00-0AA1**
• 200 mm (7.87 in)	**6SL3162-1AH01-0AA0**
• 300 mm (11.81 in)	**6SL3162-1AH00-0AA0**
DC link rectifier adapter For direct infeed of DC link voltage	
• Screw-type terminals 0.5 ... 10 mm^2 For Line Modules and Motor Modules in booksize format with a width of 50 mm (1.97 in), 75 mm (2.95 in) and 100 mm (3.94 in)	**6SL3162-2BD00-0AA0**
• Screw-type terminals 35 ... 95 mm^2 For Line Modules and Motor Modules in booksize format with a width of 150 mm (5.91 in), 200 mm (7.87 in) and 300 mm (11.81 in)	**6SL3162-2BM00-0AA0**
DC link adapter (2 units) For multi-tier configuration Screw-type terminals 35 ... 95 mm^2 For all Line Modules and Motor Modules in booksize format	**6SL3162-2BM01-0AA0**

Description	Article No.
Accessories for re-ordering	
24 V terminal adapter For all Line Modules and Motor Modules in booksize format	**6SL3162-2AA00-0AA0**
24 V jumper For connection of the 24 V busbars (for booksize format)	**6SL3162-2AA01-0AA0**
Terminal Kit (Plug-in terminals, DRIVE-CLiQ jumper (length = module width + 60 mm (2.36 in)), dust protection blanking plugs) For DRIVE-CLiQ port For Active Line Modules with a width of	
• 100 mm (3.94 in)	**6SL3163-8FD00-0AA0**
• 150 mm (5.91 in)	**6SL3163-8GF00-0AA0**
• 200 mm (7.87 in)	**6SL3163-8HH00-0AA0**
• 300 mm (11.8 in)	**6SL3163-8JM00-0AA0**
Warning labels in 30 languages This label set can be glued over the standard German or English labels to provide warnings in other languages. One set of labels is supplied with the devices. One sign in each of the following languages is provided in each set: BG, CN, CZ, DE, DK, EE, ES, FI, FR, GB, GR, HU, IE, IS, IT, JP, KR, LT, LV, MT, NL, NO, PL, PT, RO, RU, SE, SI, SK, TR	**6SL3166-3AB00-0AA0**
Dust protection blanking plugs (50 units) For DRIVE-CLiQ port	**6SL3066-4CA00-0AA0**

© Siemens 2022

Characteristic curves

Overload capability

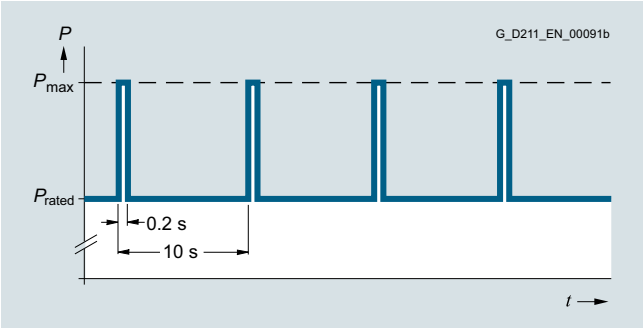

Duty cycle with previous load

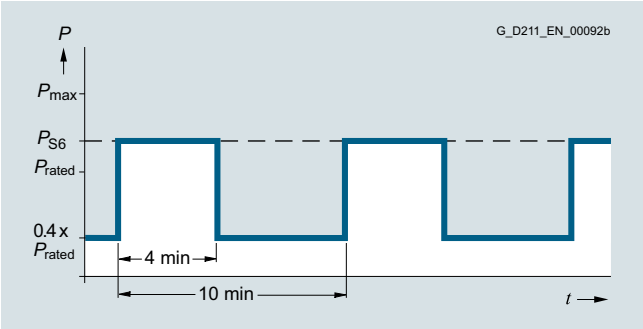

S6 duty cycle with previous load

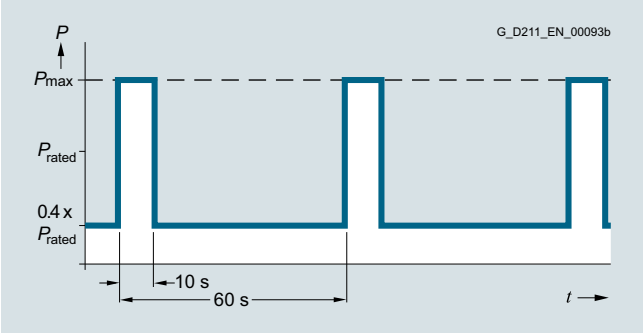

S6 duty cycle with previous load

55 kW Active Line Module only:

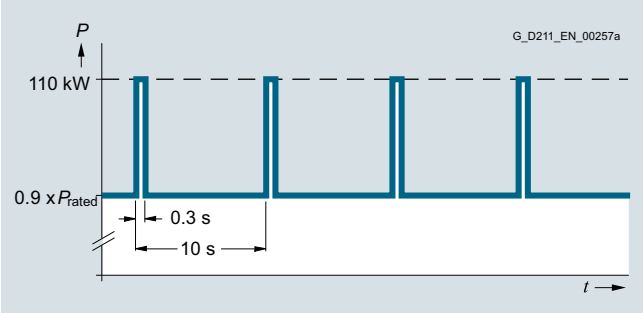

Peak power load duty cycle with previous load

Derating characteristics

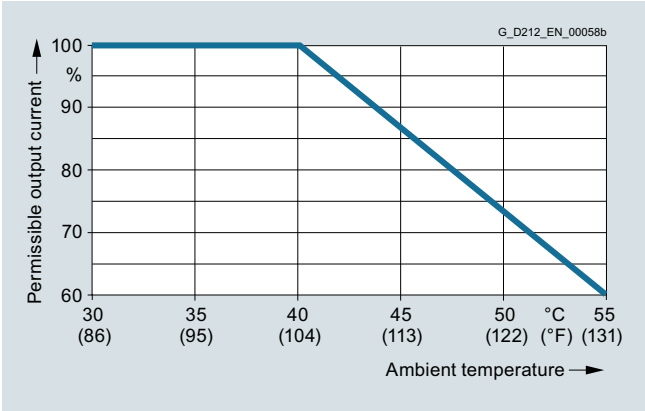

Output power as a function of ambient temperature

Installation altitude

- >1000 ... 4000 m (3281 ... 13124 ft) above sea level
  - Reduction of the output current by 10 % per 1000 m (3281 ft), or
  - Reduction of the ambient temperature by 5 °C (9 °F) per 1000 m (3281 ft)
- >2000 ... 4000 m (6562 ... 13124 ft) above sea level
  - Operation on line supply systems with grounded neutral point, or
  - Operation with an isolating transformer with secondary grounded neutral point

© Siemens 2022

Overview

Active Interface Modules for 16 kW, 36 kW, 55 kW and 80 kW/120 kW

The Active Interface Modules combine with the Active Line Modules to form a functional unit and are required for operation of the associated Active Line Module. The Active Interface Modules contain a Clean Power Filter and basic interference suppression to ensure compliance with Category C3 in accordance with EN 61800-3 with respect to emitted interference.

The Clean Power Filter protects the mains connection from switching-frequency harmonics. The drive system therefore draws a sinusoidal current from the supply and causes almost no harmonics.

The Active Line Modules in combination with the Active Interface Module can also be operated with supply systems with an isolated star point (IT supply systems).

Design

The scope of supply of the Active Interface Modules includes:

- Connector X21 for temperature evaluation and fan control
- Connector X24 for connecting the 24 V supply for the integrated fan
- DRIVE-CLiQ cable for connecting the Control Unit to the Active Line Module; length of the DRIVE-CLiQ cable = width of the Active Interface Module + 0.11 m (4.33 in)
- Shield connection plate for Active Interface Module 16 kW
- 1 set of warning signs in 30 languages

Integration

The Active Interface Module requires a 24 V DC supply for operation of the integral fan.
The fan rotates after the 24 V DC supply is applied and can, if necessary (service life, noise), be disconnected from the Control Unit over the "Fan off" input. It is only permitted to switch off the fan when the infeed of the drive system is not operating, otherwise the Active Interface Module will overheat.

The thermostatic switch installed in the Active Interface Module is evaluated over the connected Active Line Module.

The power cables between the Active Interface Module and Active Line Module must be shielded if limit values for interference suppression are to be complied with. The cable shield can be routed over the shield connection plate (option) to the Active Interface Module or Active Line Module.

Integration (continued)

Depending on the position of the Active Interface Module in the drive system, additional DRIVE-CLiQ cables may be required. If it is separately installed next to the left side of the Control Unit and Active Line Module, no additional DRIVE-CLiQ cables are required. If the Active Interface Module is placed between the Control Unit and Active Line Module, the DRIVE-CLiQ cables supplied with the Active Line Modules are suitable for setting up a line topology, i.e. Active Line Module and all Motor Modules in series on one DRIVE-CLiQ line. If the Active Line Module is connected over a separate DRIVE-CLiQ line, the DRIVE-CLiQ cable marked with (1) must be ordered. A DRIVE-CLiQ cable suitable for connection (2) is included in the scope of supply of the Active Line Module.

For DRIVE-CLiQ cables for different configurations, see section MOTION-CONNECT connection systems.

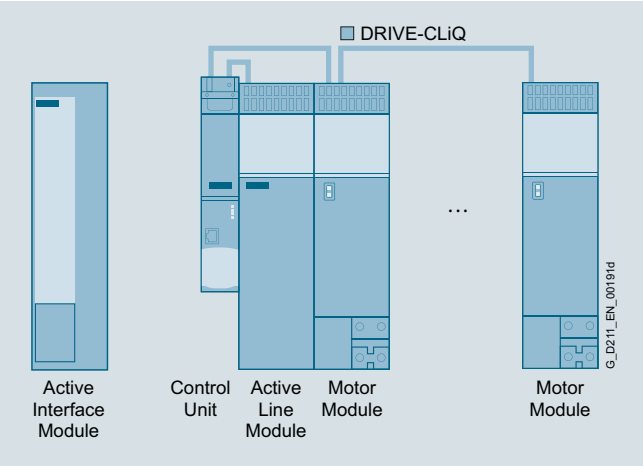

Separate Active Interface Module

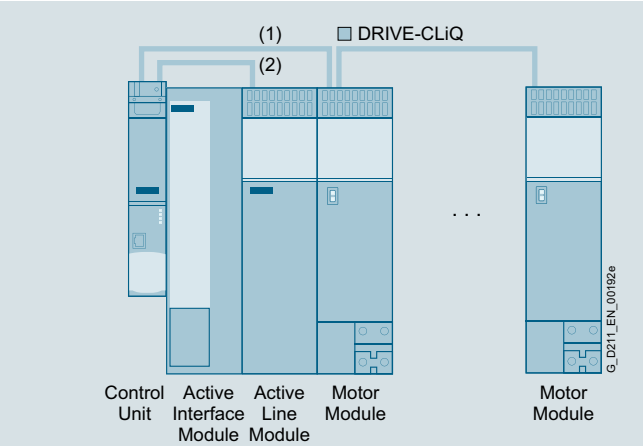

(1) DRIVE-CLiQ cable between Control Unit and Motor Module

Active Interface Module 16 kW:	0.31 m
Active Interface Module 36 kW:	0.41 m
Active Interface Module 55 kW:	0.60 m
Active Interface Module 80 kW and 120 kW:	0.95 m

(2) Included in scope of supply of Active Line Modules

Active Interface Module integrated in the drive line-up

© Siemens 2022

Technical specifications

Article No.		6SL3100-0BE21-6AB0	6SL3100-0BE23-6AB0	6SL3100-0BE25-5AB0	6SL3100-0BE28-0AB0	6SL3100-0BE31-2AB0
Product designation		Active Interface Module with internal air cooling				
Line voltage 380 ... 480 V 3 AC						
Rated current	A	26	58	88	128	192
Current requirement 24 V DC electronics power supply, max.	A	0.25	0.49	0.6	1.2	1.2
Internal resistance Digital input "Fan off" (X21/Pin 4)	Ω	1440 ±10 %	1440 ±10 %	1440 ±10 %	1440 ±10 %	1440 ±10 %
Power loss	kW	0.27	0.34	0.38	0.49	0.585
Cooling air requirement	m^3/s (ft^3/s)	0.03 (1.1)	0.04 (1.4)	0.083 (2.9)	0.167 (5.9)	0.167 (5.9)
Sound pressure level L_{pA} (1 m)	dB	57	60	66	68	68
Line supply/load connection L1, L2, L3/U2, V2, W2		Connector	Screw terminals	Screw terminals	M8 screw studs	M8 screw studs
• Conductor cross-section	mm^2	16	50	50	2.5 … 120 or 2 × 50	2.5 … 120 or 2 × 50
Thermostatic switch (NC contact)						
• Switching capacity		250 V AC/1.6 A 60 V DC/0.75 A	250 V AC/1.6 A 60 V DC/0.75 A	250 V AC/1.6 A 60 V DC/0.75 A	250 V AC/1.6 A 60 V DC/0.75 A	250 V AC/1.6 A 60 V DC/0.75 A
PE connection		M5 screw	M6 screw	M6 screw	M8 screw	M8 screw
Degree of protection		IP20	IP20	IP20	IP20	IP20
Dimensions						
• Width	mm (in)	100 (3.94)	150 (5.91)	200 (7.87)	300 (11.81)	300 (11.81)
• Height	mm (in)	380 (14.96)	380 (14.96)	380 (14.96)	380 (14.96)	380 (14.96)
• Depth	mm (in)	270 (10.63)	270 (10.63)	270 (10.63)	270 (10.63)	270 (10.63)
Net weight	kg (lb)	11.6 (25.6)	19 (41.9)	23.2 (51.2)	31.9 (70.3)	36.6 (80.7)
Certificate of suitability		cURus	cURus	cURus	cURus	cURus
Suitable for Active Line Module in booksize format	Type	6SL3130-7TE21-6AA4	6SL3130-7TE23-6AA3	6SL3130-7TE25-5AA3	6SL3130-7TE28-0AA3	6SL3130-7TE31-2AA3
• Rated power of the Active Line Module	kW (hp)	16 (18)	36 (40)	55 (60)	80 (100)	120 (150)

© Siemens 2022

Selection and ordering data

Suitable for Active Line Module Rated power of the Active Line Module kW (hp)	Booksize format	**Active Interface Module** Article No.
Line voltage 380 ... 480 V 3 AC		
16 (18)	6SL3130-7TE21-6AA4	**6SL3100-0BE21-6AB0**
36 (40)	6SL3130-7TE23-6AA3	**6SL3100-0BE23-6AB0**
55 (60)	6SL3130-7TE25-5AA3	**6SL3100-0BE25-5AB0**
80 (100)	6SL3130-7TE28-0AA3	**6SL3100-0BE28-0AB0**
120 (150)	6SL3130-7TE31-2AA3	**6SL3100-0BE31-2AB0**

Description	Article No.
Accessories	
Shield connection plate [1]	
• For Active Interface Module 36 kW (40 hp)	**6SL3163-1AF00-0AA0**
• For Active Interface Module 55 kW (60 hp)	**6SL3163-1AH00-0AA0**
• For Active Interface Module 80 kW (100 hp) and 120 kW (150 hp)	**6SL3163-1AM00-0AA0**
DRIVE-CLiQ cable, pre-assembled Degree of protection of connector IP20/IP20	
• For Active Interface Module 16 kW (18 hp), 0.31 m (1.02 ft) in length	**6SL3060-4AK00-0AA0**
• For Active Interface Module 36 kW (40 hp), 0.41 m (1.35 ft) in length	**6SL3060-4AP00-0AA0**
• For Active Interface Module 55 kW (60 hp), 0.6 m (1.97 ft) in length	**6SL3060-4AU00-0AA0**
• For Active Interface Module 80 kW (100 hp) and 120 kW (150 hp), 0.95 m (3.12 ft) in length	**6SL3060-4AA10-0AA0**
Accessories for re-ordering	
Terminal Kit (plug-in terminals, DRIVE-CLiQ jumper)	
• For Active Interface Module 16 kW (18 hp)	**6SL3160-8CD10-0AA0**
• For Active Interface Module 36 kW (40 hp)	**6SL3160-8DF10-0AA0**
• For Active Interface Module 55 kW (60 hp)	**6SL3160-8EH10-0AA0**
• For Active Interface Modules 80 kW (100 hp) and 120 kW (150 hp)	**6SL3160-8FM10-0AA0**
Warning labels in 30 languages This label set can be glued over the standard German or English labels to provide warnings in other languages. One set of labels is supplied with the devices. One sign in each of the following languages is provided in each set: BG, CN, CZ, DE, DK, EE, ES, FI, FR, GB, GR, HU, IE, IS, IT, JP, KR, LT, LV, MT, NL, NO, PL, PT, RO, RU, SE, SI, SK, TR	**6SL3166-3AB00-0AA0**

[1] For Active Interface Module 16 kW, included in scope of supply

© Siemens 2022

Characteristic curves

Overload capability

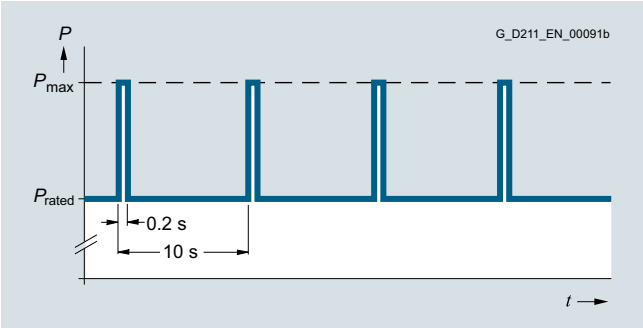

Duty cycle with previous load

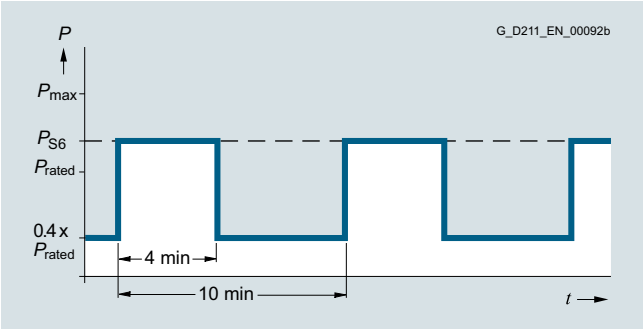

S6 duty cycle with previous load

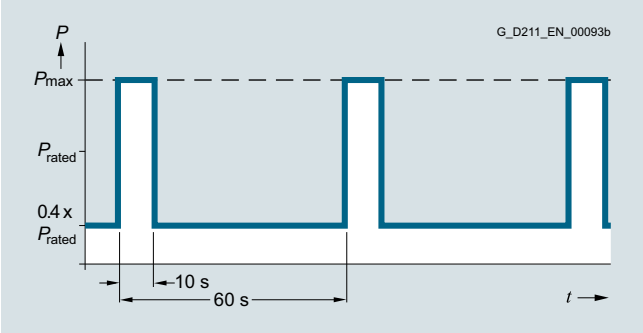

S6 duty cycle with previous load

55 kW Active Line Module only:

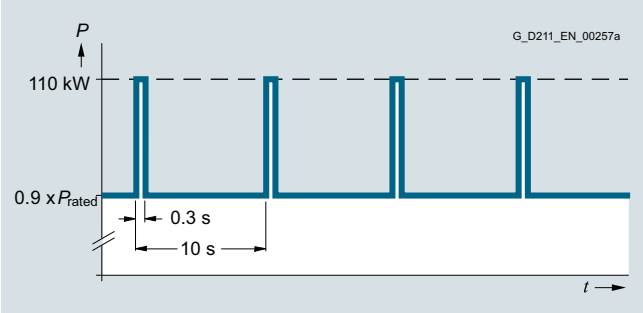

Peak power load duty cycle with previous load

Derating characteristics

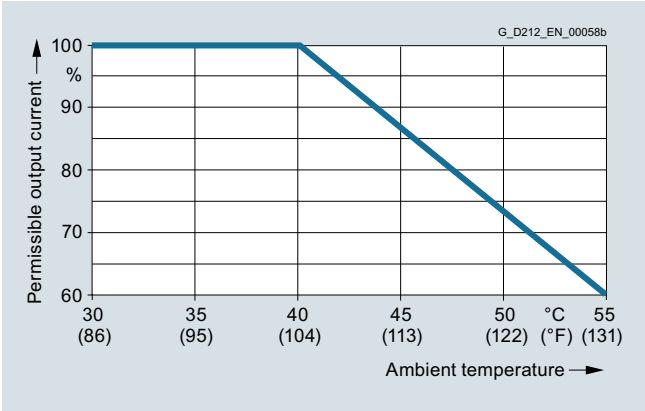

Output power as a function of ambient temperature

Installation altitude

- >1000 ... 4000 m (3281 ... 13124 ft) above sea level
  - Reduction of the output current by 10 % per 1000 m (3281 ft), or
  - Reduction of the ambient temperature by 5 °C (9 °F) per 1000 m (3281 ft)
- >2000 ... 4000 m (6562 ... 13124 ft) above sea level
  - Operation on line supply systems with grounded neutral point, or
  - Operation with an isolating transformer with secondary grounded neutral point

© Siemens 2022

Overview

Basic Line Filter

In conjunction with Active Interface Modules and a logically consistent configuration of the plant or system, line filters limit the interference conducted by the power modules to the limit values of Category C2 acc. to EN 61800-3. Line filters are only suitable for direct connection to TN line systems.

Note:

According to product standard EN 61800-3, RFI suppression commensurate with the relevant rated conditions must be provided and is a legal requirement in the EU (EMC Directive). Line filters and line reactors are required for this purpose. The use of line filters of other makes can lead to limit value violations, resonance, overvoltages and irreparable damage to motors or other equipment. The machine manufacturer must provide verification that the machinery to be operated with the drive products and the installed suppression elements, e.g. line filters, are CE-EMC-compliant.

Overview (continued)

Optional Basic Line Filters that are coordinated with the power ranges in booksize format are available for the SINAMICS S120 drive system.

With the Basic Line Filters in combination with the Active Interface Modules, the limits for the interference voltages can be extended to Category C2 (EN 61800-3) or, retaining Category C3, longer total cable lengths are possible for the configuration.

Basic Line Filters are used on machines on which conducted interference emissions in the frequency range between 150 kHz and 30 MHz need to be damped in accordance with the requirements of CE-EMC legislation.

Selection and ordering data

Suitable for Active Line Module		**Basic Line Filter**
Rated power of the Active Line Module kW (hp)	Booksize format	Article No.
16 (18)	6SL3130-7TE21-6AA4	**6SL3000-0BE21-6DA0**
36 (40)	6SL3130-7TE23-6AA3	**6SL3000-0BE23-6DA1**
55 (60)	6SL3130-7TE25-5AA3	**6SL3000-0BE25-5DA0**
80 (100)	6SL3130-7TE28-0AA3	**6SL3000-0BE28-0DA0**
120 (150)	6SL3130-7TE31-2AA3	**6SL3000-0BE31-2DA0**

Technical specifications

Article No.		6SL3000-0BE21-6DA0	6SL3000-0BE23-6DA1	6SL3000-0BE25-5DA0	6SL3000-0BE28-0DA0	6SL3000-0BE31-2DA0
Product designation		Basic Line Filter				
Line voltage 380 ... 480 V 3 AC						
Rated current	A	36	74	105	132	192
Power loss	kW	0.016	0.02	0.043	0.056	0.073
Line supply/ load connection L1, L2, L3 / U, V, W		Screw terminals	Screw terminals	Screw terminals	Screw terminals	Screw terminals
• Conductor cross-section	mm^2	10	35	50	95	95
PE connection		M6 screw studs according to DIN 46234	M6 screw studs according to DIN 46234	M8 screw studs according to DIN 46234	M10 screw studs according to DIN 46234	M10 screw studs according to DIN 46234
Degree of protection		IP20	IP20	IP20	IP20	IP20
Dimensions						
• Width	mm (in)	50 (1.97)	75 (2.95)	100 (3.94)	150 (5.91)	150 (5.91)
• Height	mm (in)	429 (16.89)	433 (17.05)	466 (18.35)	479 (18.86)	479 (18.86)
• Depth	mm (in)	226 (8.90)	226 (8.90)	226 (8.90)	226 (8.90)	226 (8.90)
Net weight	kg (lb)	5 (11.0)	7.5 (16.5)	11.5 (25.4)	17.5 (38.6)	18.5 (40.8)
Certificate of suitability		cURus	cURus	cURus	cURus	cURus
Suitable for Active Line Module in booksize format	Type	6SL3130-7TE21-6AA4	6SL3130-7TE23-6AA3	6SL3130-7TE25-5AA3	6SL3130-7TE28-0AA3	6SL3130-7TE31-2AA3
• Rated power of the Active Line Module	kW (hp)	16 (18)	36 (40)	55 (60)	80 (100)	120 (150)

© Siemens 2022

Overview

Suitable line-side power components are assigned depending on the power rating of the Active Line Modules.

The tables below list recommended components.

Additional information about the line-side power components can be found in the Industry Mall.

Assignment of line-side power components to Active Line Modules in booksize format

Suitable for Active Line Module		Line contactor	**Output coupling device for line contactor**	**Main switch**	**Leading auxiliary switch for main switch**
Rated power	Booksize format				
kW (hp)	Type	Type	Article No.	Article No.	Article No.
16 (18)	6SL3130-7TE21-6AA4	3RT2028-.... *)	**3RQ3018-1AB00**	**3LD2504-0TK51**	**3LD9200-5B**
36 (40)	6SL3130-7TE23-6AA3	3RT2038-.... *)	**3RQ3018-1AB00**	**3LD2704-0TK51**	**3LD9200-5B**
55 (60)	6SL3130-7TE25-5AA3	3RT1054-.... *)	**3RQ3018-1AB00**	**3KA5330-1GE01**	**3KX3552-3EA01**
80 (100)	6SL3130-7TE28-0AA3	3RT1056-.... *)	**3RQ3018-1AB00**	**3KA5330-1GE01**	**3KX3552-3EA01**
120 (150)	6SL3130-7TE31-2AA3	3RT1065-.... *)	**3RQ3018-1AB00**	**3KA5730-1GE01**	**3KX3552-3EA01**

Suitable for Active Line Module		**Circuit breaker IEC 60947**	Circuit breaker UL489/CSA C22.2 No. 5-02	**Fuse switch disconnector**	**Switch disconnector with fuse holders**	**Leading auxiliary switch for switch disconnector with fuse holders**
Rated power	Booksize format	Article No.	Article No.			
kW (hp)	Type	Type	Type	Article No.	Article No.	Article No.
16 (18)	6SL3130-7TE21-6AA4	**3RV2031-4UA10**	3VA5140-6ED31-.... *)	**3NP1123-1CA20**	**3KL5230-1GB01**	**3KX3552-3EA01**
36 (40)	6SL3130-7TE23-6AA3	**3RV2041-4RA10**	3VA5190-6ED31-.... *)	**3NP1123-1CA20**	**3KL5230-1GB01**	**3KX3552-3EA01**
55 (60)	6SL3130-7TE25-5AA3	3VA1112-6ED32-.... *)	3VA5212-7ED31-.... *)	**3NP1143-1DA20**	**3KL5530-1GB01**	**3KX3552-3EA01**
80 (100)	6SL3130-7TE28-0AA3	3VA1220-6EF32-.... *)	3VA5217-7ED31-.... *)	**3NP1143-1DA20**	**3KL5530-1GB01**	**3KX3552-3EA01**
120 (150)	6SL3130-7TE31-2AA3	3VA1225-6EF32-.... *)	3VA5225-7ED31-.... *)	**3NP1153-1DA20**	**3KL5730-1GB01**	**3KX3552-3EA01**

Suitable for Active Line Module		**NEOZED fuse (gL/gG)**			**DIAZED fuse (gL/gG)**			**LV HRC fuse (gL/gG)**			UL/CSA fuse, Class J [1] Available from: Mersen www.ep.mersen.com		
Rated power	Booksize format	Rated current	Size		Rated current	Size		Rated current	Size		Rated current	Size	
kW (hp)	Type	A		Article No.	A		Article No.	A		Article No.	A	mm (in)	Ref. No.
16 (18)	6SL3130-7TE21-6AA4	35	D02	**5SE2335**	35	DIII	**5SB411**	35	000	**3NA3814**	35	27 × 60 (1.06 × 2.36)	AJT35
36 (40)	6SL3130-7TE23-6AA3	–	–	–	80	DIV	**5SC211**	80	000	**3NA3824**	80	29 × 117 (1.14 × 4.61)	AJT80
55 (60)	6SL3130-7TE25-5AA3	–	–	–	–	–	–	125	1	**3NA3132**	125	41 × 146 (1.61 × 5.75)	AJT125
80 (100)	6SL3130-7TE28-0AA3	–	–	–	–	–	–	160	1	**3NA3136**	175	41 × 146 (1.61 × 5.75)	AJT175
120 (150)	6SL3130-7TE31-2AA3	–	–	–	–	–	–	250	1	**3NA3144**	250	54 × 181 (2.13 × 7.13)	AJT250

[1] Not suitable for 3NP and 3KL switch disconnectors.

*) See Industry Mall for Article No. supplements.

© Siemens 2022

Overview

Basic Line Modules in booksize format

Basic Line Modules are used for applications in which no energy is returned to the supply or where the energy exchange between motor and generator axes takes place in the DC link. Basic Line Modules can only feed energy from the supply system into the DC link, energy cannot be fed back into the supply system. The DC link voltage is directly derived from the 3-phase line voltage via a 6-pulse bridge circuit. Basic Line Modules are suitable for connection to grounded, star TN, TT and non-grounded symmetrical IT supply systems. The connected Motor Modules are pre-charged over the integrated pre-charging resistors (20 kW and 40 kW) or through activation of the thyristors (100 kW).

The 20 kW and 40 kW Basic Line Modules are equipped with an integrated brake chopper and can be directly used for applications in generating mode after connecting an external braking resistor.
A Braking Module is only required with a 100 kW Basic Line Module in generating mode.

Design

The Basic Line Modules in booksize format feature the following connections and interfaces as standard:

- 1 power connection
- 1 connection for the 24 V DC electronics power supply
- 1 DC link connection
- 3 DRIVE-CLiQ sockets
- 1 connection for braking resistor
  (20 kW (25 hp) and 40 kW (50 hp) Basic Line Modules only)
- 1 temperature sensor input for KTY84-130, Pt1000 or PTC
  (Pt1000 can be used from firmware V4.7 HF17)

The status of the Basic Line Modules is indicated via two multicolor LEDs.

The scope of supply of the Basic Line Modules includes:

- DRIVE-CLiQ cable for connection to the adjacent Control Unit on the left for drive control, length 0.11 m (4.33 in)
- DRIVE-CLiQ cable (length depends on Basic Line Module width) for connection to the adjacent Motor Module, length = width of Basic Line Module + 0.11 m (4.33 in)
- Jumper for connecting the 24 V DC busbar to the adjacent Motor Module
- 24 V terminal adapter (X24)
- Connector X21
- 2 blanking plugs for sealing unused DRIVE-CLiQ sockets
- 1 set of warning labels in 30 languages

Integration

The Basic Line Module receives its control information via DRIVE-CLiQ from:

- CU320-2 Control Unit
- SINUMERIK 840D sl with
  - NCU 710.3B PN
  - NCU 720.3B PN
  - NCU 730.3B PN
  - Numeric Control Extensions NX10.3/NX15.3

Note:

The thermostatic switch built into the braking resistor must be looped into the shutdown chain of the drive to prevent thermal overloading of the system in the event of a fault. If a braking resistor is not connected, a jumper must be connected between X21.1 and X21.2.

© Siemens 2022

Technical specifications

Article No.	6SL313...
Product designation	Basic Line Module in booksize format
Line voltage (up to 2000 m (6562 ft) above sea level)	380 ... 480 V 3 AC ±10 % (-15 % <1 min)[1]
Line frequency	47 ... 63 Hz
SCCR (short-circuit current rating)	65 kA in conjunction with the recommended Class J fuse, or circuit breaker according to UL489 / CSA 22.2 No. 5-02 see recommended line-side components
Line power factor at rated power	
• Fundamental (cos φ_1)	>0.96
• Total (λ)	0.75 ... 0.93
Overvoltage category according to EN 60664-1	Class III
DC link voltage, approx.	1.35 × line voltage [2]
Electronics power supply	24 V DC -15 %/+20 %

Article No.	6SL313...
Product designation	Basic Line Module in booksize format
Radio interference suppression	
• Standard	
- 20 kW and 40 kW (25 hp and 40 hp) Basic Line Modules	No radio interference suppression
- 100 kW (125 hp) Basic Line Module	Category C3 to EN 61800-3 Total cable length up to 350 m (1148 ft) (shielded)
• With line filter	Category C2 to EN 61800-3 Total cable length up to 350 m (1148 ft) (shielded)
Type of cooling	Internal air cooling (power units with increased air cooling by built-in fan)
Permissible ambient and coolant temperature (air) during operation for line-side components, Line Modules and Motor Modules	0 ... 40 °C (32 ... 104 °F) without derating, > 40 ... 55 °C (104 ... 131 °F), see derating characteristics
Installation altitude	Up to 1000 m (3281 ft) above sea level without derating, > 1000 ... 4000 m (3281 ... 13124 ft) above sea level, see derating characteristics
Declarations of conformity	CE (Low Voltage and EMC Directives)
Certificate of suitability	cULus

Technical specifications

Article No.		6SL3130-1TE22-0AA0	6SL3130-1TE24-0AA0	6SL3130-1TE31-0AA0
Product designation		Basic Line Modules in booksize format with internal air cooling		
Line voltage 380 ... 480 V 3 AC				
Power				
• Rated power P_{rated}				
- At 380 V 3 AC	kW	20	40	100
- At 460 V 3 AC [3]	(hp)	(25)	(50)	(125)
• For S6 duty (40 %) P_{S6}	kW	26	52	130
• P_{max}	kW	60	120	175
Braking power with external braking resistor				
• $P_{Bmax.}$ (=2 × P_{rated})	kW	40	80	–
• Continuous braking power P_d (=0.25 × P_{rated})	kW	5	10	–
DC link current				
• At 600 V DC	A	33.5	67	167
• For S6 duty (40 %)	A	43	87	217
• Maximum	A	100	200	292
Input current				
• Rated current at 380 V 3 AC	A	35	70	172
• Maximum	A	100	188	290
Activation threshold Braking module	V	774	774	–

[1] Can also be used on networks with 200 ... 240 V 3 AC ±10% with appropriate parameterization and reduced power.

[2] The DC link voltage is unregulated and load-dependent.

[3] Nominal hp ratings are provided for ease of assigning components only. The Line Module outputs are dependent on the Motor Module loading and are to be dimensioned accordingly.

© Siemens 2022

Technical specifications (continued)

Article No.		6SL3130-1TE22-0AA0	6SL3130-1TE24-0AA0	6SL3130-1TE31-0AA0
Product designation		Basic Line Modules in booksize format with internal air cooling		
Line voltage 380 ... 480 V 3 AC				
Resistance value of the external braking resistor	Ω	≥14.8	≥7.4	–
Cable length, max. to braking resistor	m (ft)	15 (50)	15 (50)	–
Connection for braking resistor (X2)		Screw-type terminals	Screw-type terminals	–
• Conductor cross-section, max.	mm^2	0.5 ... 4	0.5 ... 10	–
Current requirement, max. 24 V DC electronic power supply	A	1	1.4	2
Current carrying capacity				
• 24 V DC busbars	A	20	20	20
• DC link busbars	A	100	200	200
DC link capacitance				
• Basic Line Module	µF	940	1880	4100
• Drive line-up, max.	µF	20000	20000	50000
Power loss [1]	kW	0.144	0.284	0.628
Cooling air requirement	m^3/s (ft^3/s)	0.016 (0.6)	0.031 (1.1)	0.05 (1.8)
Sound pressure level L_{pA} (1 m)	dB	<60	<65	<65
Line connection U1, V1, W1		Screw-type terminals	Screw-type terminals	M8 screw stud
• Conductor cross-section, max.	mm^2	0.5 … 16	10 ... 50	1 × 35 ... 120 or 2 × 50
Shield connection		Integrated into the power plug	See Accessories	See Accessories
PE connection		M5 screw	M6 screw	M6 screw
Cable length, max. (total of all motor power cables and DC link)				
• Shielded/unshielded	m (ft)	630/850 (2067/2789)	630/850 (2067/2789)	1000/1500 (3281/4922)
Degree of protection		IP20	IP20	IP20
Dimensions				
• Width	mm (in)	100 (3.94)	150 (5.91)	200 (7.87)
• Height	mm (in)	380 (14.96)	380 (14.96)	380 (14.96)
• Depth	mm (in)	270 (10.63)	270 (10.63)	270 (10.63)
Net weight	kg (lb)	6.8 (14.9)	11.3 (24.9)	15.8 (34.8)

[1] Power loss of Basic Line Module at rated output including losses of 24 V DC electronics power supply.

© Siemens 2022

Selection and ordering data

Rated power kW (hp)	**Basic Line Modules in booksize format** Article No.
Line voltage 380 ... 480 V 3 AC	
20 (25)	**6SL3130-1TE22-0AA0**
40 (50)	**6SL3130-1TE24-0AA0**
100 (125)	**6SL3130-1TE31-0AA0**

Description	Article No.
Accessories	
Shield connection plate For Line Modules and Motor Modules in booksize format	
• With a width of 150 mm (5.91 in)	**6SL3162-1AF00-0AA1**
• With a width of 200 mm (7.87 in)	**6SL3162-1AH01-0AA0**
DC link rectifier adapter For direct infeed of DC link voltage	
• Screw-type terminals 0.5 ... 10 mm^2 For Line Modules and Motor Modules in booksize format with a width of 50 mm, 75 mm and 100 mm (1.97 in, 2.95 in and 3.94 in)	**6SL3162-2BD00-0AA0**
• Screw-type terminals 35 ... 95 mm^2 For Line Modules and Motor Modules in booksize format with a width of 150 mm, 200 mm and 300 mm (5.91 in, 7.87 in and 11.81 in)	**6SL3162-2BM00-0AA0**
DC link adapter (2 units) For multi-tier configuration Screw-type terminals 35 ... 95 mm^2 For all Line Modules and Motor Modules in booksize format	**6SL3162-2BM01-0AA0**

Description	Article No.
Accessories for re-ordering	
24 V terminal adapter For all Line Modules and Motor Modules in booksize format	**6SL3162-2AA00-0AA0**
24 V jumper For connection of the 24 V busbars (for booksize format)	**6SL3162-2AA01-0AA0**
Terminal Kit (plug-in terminals, DRIVE-CLiQ jumper (length = module width + 60 mm (2.36 in)), dust-protection blanking plugs) For DRIVE-CLiQ port For Basic Line Modules with a width of	
• 100 mm (3.94 in)	**6SL3163-8LD00-0AA0**
• 150 mm (5.91 in)	**6SL3163-8GF00-0AA0**
• 200 mm (7.87 in)	**6SL3163-8HH00-0AA0**
Warning labels in 30 languages This label set can be glued over the standard English or German labels to provide warnings in other languages. One set of labels is supplied with the devices. One sign in each of the following languages is provided in each set: BG, CN, CZ, DE, DK, EE, ES, FI, FR, GB, GR, HU, IE, IS, IT, JP, KR, LT, LV, MT, NL, NO, PL, PT, RO, RU, SE, SI, SK, TR	**6SL3166-3AB00-0AA0**
Dust protection blanking plugs (50 units) For DRIVE-CLiQ port	**6SL3066-4CA00-0AA0**

© Siemens 2022

Characteristic curves

Overload capability

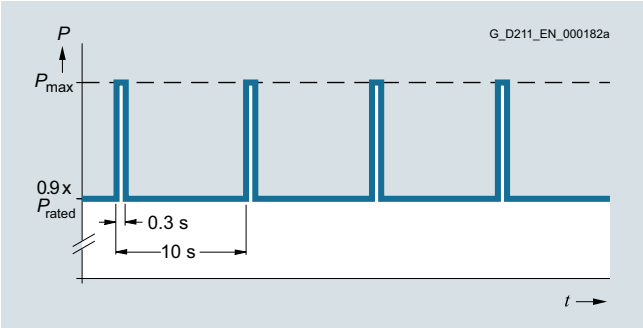

Duty cycle with previous load

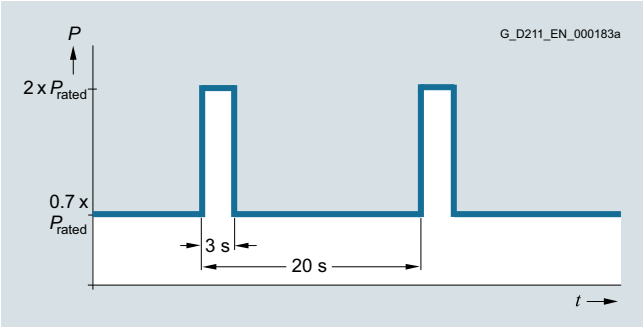

Duty cycle with previous load

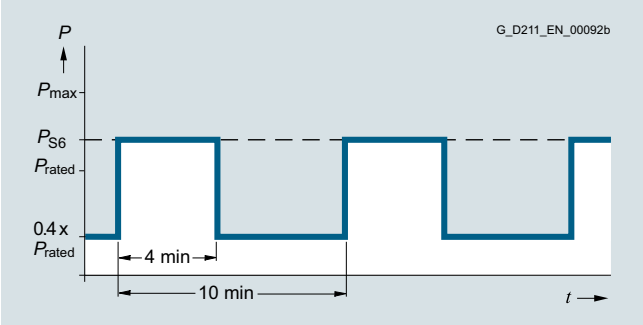

S6 duty cycle with previous load

20 kW (25 hp) and 40 kW (50 hp) Basic Line Modules only

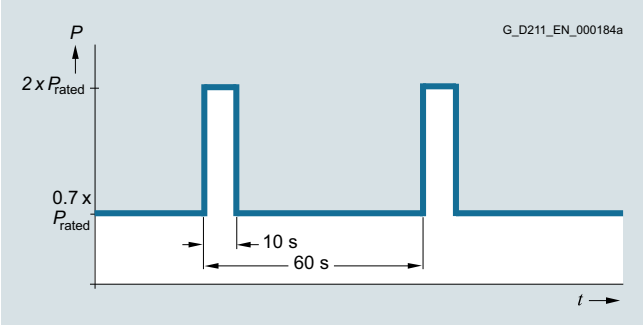

Duty cycle with previous load

Derating characteristics

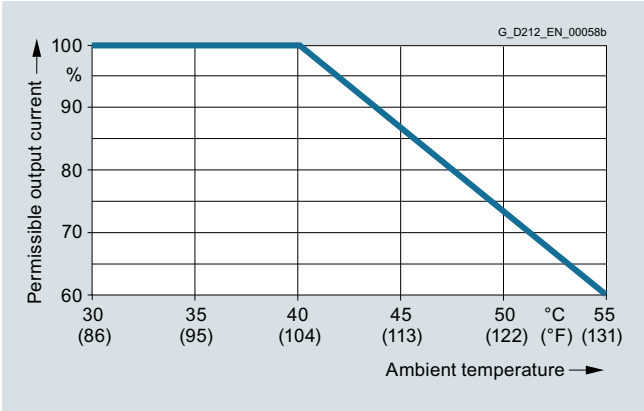

Output power as a function of ambient temperature

Installation altitude

- >1000 ... 4000 m (3281 ... 13124 ft) above sea level
  - Reduction of the output current by 10 % per 1000 m (3281 ft), or
  - Reduction of the ambient temperature by 5 °C (9 °F) per 1000 m (3281 ft)
- >2000 ... 4000 m (6562 ... 13124 ft) above sea level
  - Operation on line supply systems with grounded neutral point, or
  - Operation with an isolating transformer with secondary grounded neutral point

© Siemens 2022

Characteristic curves (continued)

Braking power with external braking resistor

The following duty cycles are defined for the braking modules of the 20 kW and 40 kW Basic Line Modules:

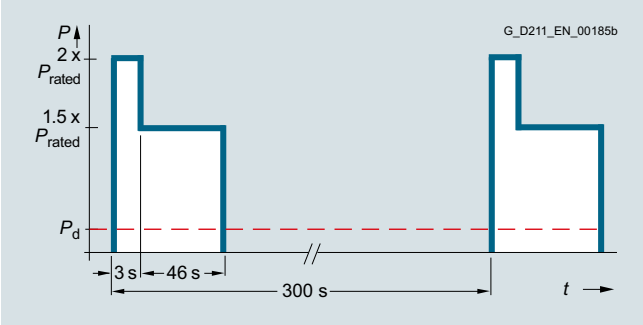

The maximum possible braking power P_{max} is calculated using the following formula:

$P_{max} = U^2/R$

U = Activation threshold
R = Resistance value of the external braking resistor

The maximum braking power is achieved with the smallest permissible resistance value. The maximum possible braking power falls at larger resistance values.

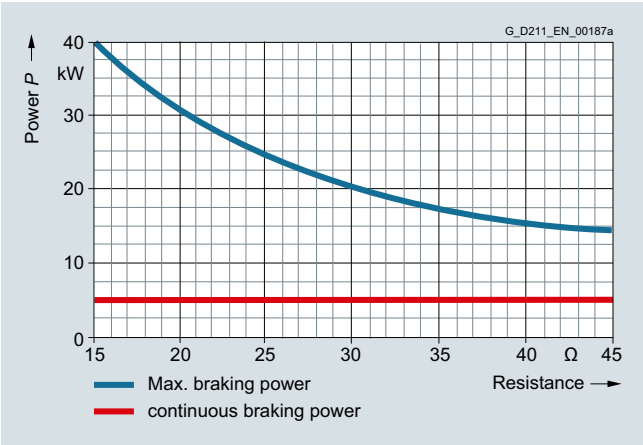

Braking power of the 20 kW Basic Line Modules depending on the connected braking resistor

When the recommended braking resistor is used, the following values result for the maximum braking power or continuous braking power:

Braking resistor 6SE7023-2ES87-2DC0
Resistance value = 20 Ω → max. braking power = 30 kW; continuous braking power = 5 kW

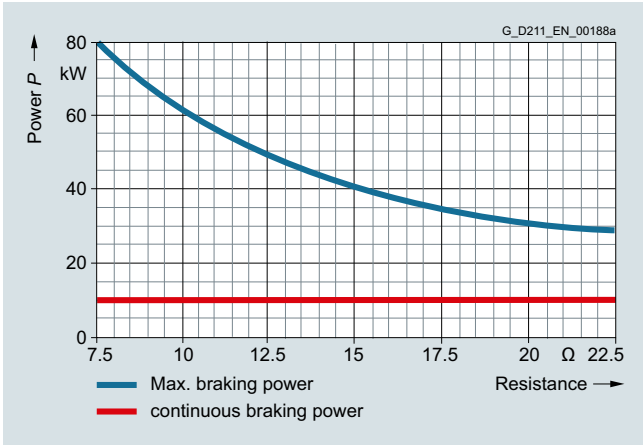

Braking power of the 40 kW Basic Line Modules depending on the connected braking resistor

When the recommended braking resistor is used, the following values result for the maximum braking power or continuous braking power:

Braking resistor 6SE7028-0ES87-2DC0
Resistance value = 8 Ω → max. braking power = 75 kW; continuous braking power = 10 kW (limited by braking module)

© Siemens 2022

Overview

20 kW (25 hp) and 100 kW (125 hp) line reactors

Line reactors reduce low-frequency line harmonic distortions and offload the semiconductors of the Basic Line Module.

Selection and ordering data

Suitable for Basic Line Module Rated power of the Basic Line Module kW (hp)	Booksize format	**Line reactor** Article No.
Line voltage 380 ... 480 V 3 AC		
20 (25)	6SL3130-1TE22-0AA0	**6SL3000-0CE22-0AA0**
40 (50)	6SL3130-1TE24-0AA0	**6SL3000-0CE24-0AA0**
100 (125)	6SL3130-1TE31-0AA0	**6SL3000-0CE31-0AA0**

Technical specifications

Article No.		6SL3000-0CE22-0AA0	6SL3000-0CE24-0AA0	6SL3000-0CE31-0AA0
Product designation		Line reactor		
Line voltage 380 ... 480 V 3 AC				
Rated current	A	37	74	185 (7.28)
Power loss at 50/60 Hz	kW	0.13/0.154	0.27/0.32	0.48/0.565
Line/load connection		Screw-type terminals	Screw-type terminals	Flat connector for M8 screw
• Conductor cross-section	mm^2	0.5 … 16	2.5 ... 35	–
PE connection		M4 screw	M6 screw studs	M8 screw studs
Degree of protection		IP20	IP20	IP00
Dimensions				
• Width	mm (in)	178 (7.01)	210 (8.27)	261 (10.28)
• Height	mm (in)	165 (6.50)	239 (9.41)	228 (8.98)
• Depth	mm (in)	100 (3.94)	105 (4.13)	138 (5.43)
Net weight	kg (lb)	5.2 (11.5)	11.2 (24.7)	21.7 (47.9)
Certificate of suitability		cURus	cURus	cURus
Suitable for Basic Line Module in booksize format	Type	6SL3130-1TE22-0AA0	6SL3130-1TE24-0AA0	6SL3130-1TE31-0AA0
• Rated power of the Basic Line Module	kW (hp)	20 (25)	40 (50)	100 (125)

© Siemens 2022

Overview

In plants with strict EMC requirements, line filters work together with line reactors to restrict the conducted interference emanating from the power modules to the limit values of Class A1 as defined in EN 55011 and Category C2 as defined in EN 61800-3. The line filters are suitable for TN and TT supply systems grounded at the neutral point.

The use of other makes of line reactor can lead to malfunctions or irreparable damage to equipment.

Selection and ordering data

Suitable for Basic Line Module		**Line filter**
Rated power of the Basic Line Module	Booksize format	
kW (hp)		Article No.
Line voltage 380 ... 480 V 3 AC		
20 (25)	6SL3130-1TE22-0AA0	**6SL3000-0BE21-6DA0**
40 (50)	6SL3130-1TE24-0AA0	**6SL3000-0BE23-6DA1**
100 (125)	6SL3130-1TE31-0AA0	**6SL3000-0BE31-2DA0**

Technical specifications

Article No.		6SL3000-0BE21-6DA0	6SL3000-0BE23-6DA1	6SL3000-0BE31-2DA0
Product designation		Line filter		
Line voltage 380 ... 480 V 3 AC				
Rated current	A	36	74	192
Power loss	kW	0.016	0.026	0.043
Line/load connection L1, L2, L3 / U, V, W		Screw-type terminals	Screw-type terminals	Screw-type terminals
• Conductor cross-section	mm^2	10	35	95
PE connection		M6 screw stud	M6 screw stud	M10 screw stud
Degree of protection		IP20	IP20	IP20
Dimensions				
• Width	mm (in)	50 (1.97)	75 (2.95)	150 (5.91)
• Height	mm (in)	429 (16.89)	433 (17.05)	479 (18.86)
• Depth	mm (in)	226 (8.90)	226 (8.90)	226 (8.90)
Net weight	kg (lb)	5 (11.3)	7.5 (16.5)	18.5 (40.8)
Certificate of suitability		cURus	cURus	cURus
Suitable for Basic Line Module in booksize format	Type	6SL3130-1TE22-0AA0	6SL3130-1TE24-0AA0	6SL3130-1TE31-0AA0
• Rated power of the Basic Line Module	kW (hp)	20 (25)	40 (50)	100 (125)

© Siemens 2022

Overview

Suitable line-side power components are assigned depending on the power rating of the Basic Line Module.

The tables below list recommended components.

Additional information about the line-side power components can be found in the Industry Mall.

Assignment of line-side power components to Basic Line Modules in booksize format

Suitable for Basic Line Module		Line contactor	**Output coupling device for line contactor**	**Main switch**
Rated power	Booksize format			
kW (hp)	Type	Type	Article No.	Article No.
Line voltage 380 ... 480 V 3 AC				
20 (25)	6SL3130-1TE22-0AA0	**3RT2028-....** *)	**3RQ3018-1AB00**	**3LD2504-0TK51**
40 (50)	6SL3130-1TE24-0AA0	**3RT2038-....** *)	**3RQ3018-1AB00**	**3LD2704-0TK51**
100 (125)	6SL3130-1TE31-0AA0	**3RT2056-....** *)	**3RQ3018-1AB00**	**3KA5530-1GE01**

Suitable for Basic Line Module		**Circuit breaker IEC 60947**	Circuit breaker UL489/CSA C22.2 No. 5-02	**Fuse-switch disconnector**
Rated power	Booksize format	Article No.		
kW (hp)	Type	Type	Type	Article No.
Line voltage 380 ... 480 V 3 AC				
20 (25)	6SL3130-1TE22-0AA0	**3RV2041-4JA10**	3VA5160-6ED31-.... *)	**3NP1123-1CA20**
40 (50)	6SL3130-1TE24-0AA0	3VA1110-6ED32-.... *)	3VA5210-7ED31-.... *)	**3NP1123-1CA20**
100 (125)	6SL3130-1TE31-0AA0	3VA1225-6EF32-.... *)	3VA5225-7ED31-.... *)	**3NP1143-1DA20**

Suitable for Basic Line Module		**Switch disconnector with fuse holders**	**LV HRC fuse (gL/gG)**			UL/CSA fuse, Class J [1] Available from: Mersen www.ep.mersen.com		
Rated power	Booksize format		Rated current	Size		Rated current	Size	
kW (hp)	Type	Article No.	A		Article No.	A	mm (in)	Ref. No.
Line voltage 380 ... 480 V 3 AC								
20 (25)	6SL3130-1TE22-0AA0	**3KL5230-1GB01**	63	000	**3NA3822**	60 A	27 × 60 (1.06 × 2.36)	AJT60
40 (50)	6SL3130-1TE24-0AA0	**3KL5230-1GB01**	100	000	**3NA3830**	100 A	29 × 117 (1.14 × 4.61)	AJT100
100 (125)	6SL3130-1TE31-0AA0	**3KL5730-1GB01**	250	1	**3NA3144**	250 A	54 × 181 (2.13 × 7.13)	AJT250

[1] Not suitable for 3NP and 3KL switch disconnectors.

*) See Industry Mall for Article No. supplements.

© Siemens 2022

Design

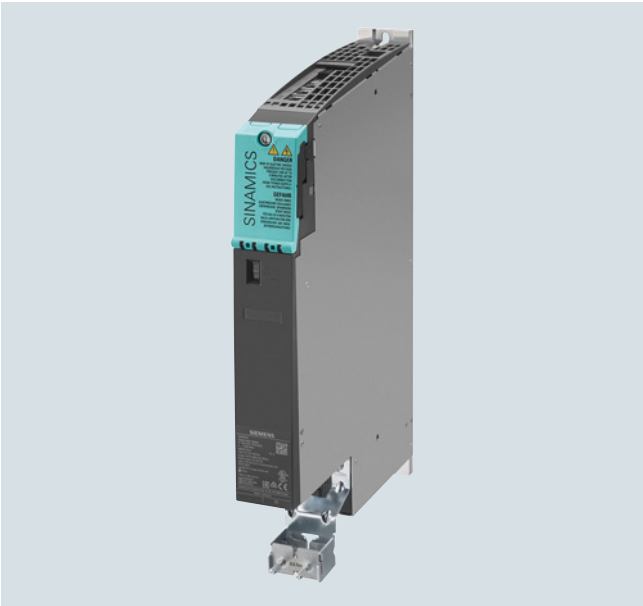

Single Motor Module in booksize format C/D type, 3 A to 30 A

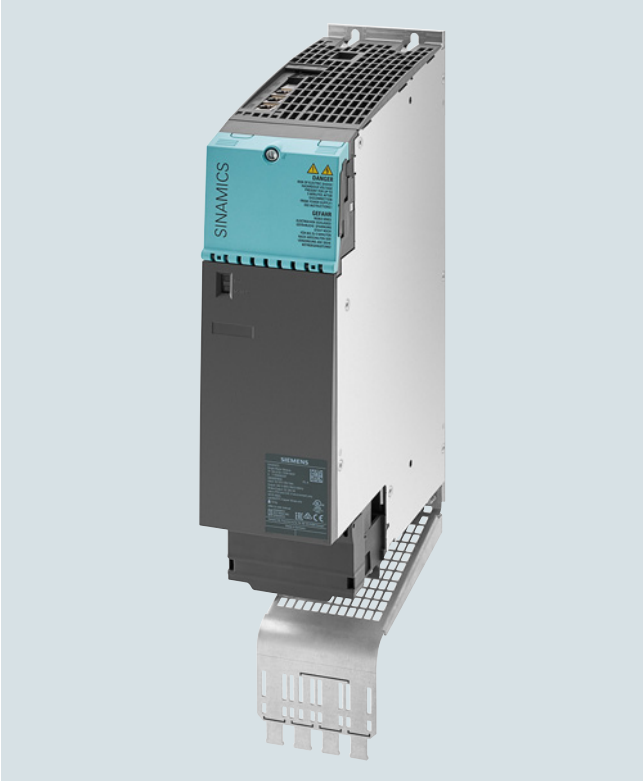

Single Motor Module in booksize format C type, 45 A and 60 A, with optional shield connection plate

Design (continued)

The Single Motor Modules in booksize format feature the following connections and interfaces as standard:

- 2 DC link connections via integrated DC link busbars
- 1 electronics power supply connection via integrated 24 V DC bars
- 3 DRIVE-CLiQ sockets
- 1 motor connection via connector X1 for C/D type 3 A to 30 A (not included in the scope of delivery)
- 1 safe standstill input
- 1 safe motor brake control
- 1 temperature sensor input for KTY84-130, Pt1000 or PTC (Pt1000 can be used from firmware V4.7 HF17)
- 2 PE (protective earth) connections – a PE connection is integrated in the connector for C/D types 3 A to 30 A

The status of the Motor Modules is indicated via two multi-color LEDs.

Motor Modules 3 A to 30 A are supplied with a mounted shield connection plate. The associated shield connection clamp can be found in the Terminal Kit supplied. A shield connection plate is optionally available for Motor Modules 45 A to 200 A. On these modules, the motor cable shield can be connected using a shield connection clamp or a hose clip.

© Siemens 2022

Design (continued)

Motor Modules in booksize format C/D types, 3 A to 60 A

Rated current	3 A	5 A	9 A	18 A	24 A	30 A	45 A	60 A
	D types							
Single Motor Modules	**3 A / 9 A** 50 mm (1.97 in)	**5 A / 15 A** 50 mm (1.97 in)	**9 A / 27 A** 50 mm (1.97 in)	**18 A / 54 A** 50 mm (1.97 in)	**24 A / 72 A** 50 mm (1.97 in)	**30 A / 90 A** 100 mm (3.94 in)	–	–
Double Motor Modules	**2 x 3 A / 2 x 9 A** 50 mm (1.97 in)	**2 x 5 A / 2 x 15 A** 50 mm (1.97 in)	**2 x 9 A / 2 x 27 A** 50 mm (1.97 in)	**2 x 18 A / 2 x 54 A** 100 mm (3.94 in)	–	–	–	–
				C types				
			Single Motor Modules	**18 A / 36 A** 50 mm (1.97 in)	**24 A / 48 A** 50 mm (1.97 in)	**30 A / 56 A** 100 mm (3.94 in)	**45 A / 90 A** 100 mm (3.94 in)	**60 A / 120 A** 100 mm (3.94 in)
Rated current / maximum current in A 50 mm (1.97 in) or 100 mm (3.94 in) widths			Double Motor Module	**2 x 18 A / 2 x 36 A** 100 mm (3.94 in)	–	–	–	–

G_PM21_EN_00266a

Overview of available Single Motor Modules in booksize format C/D types

- C type: Optimized for continuous load with up to 200 % overload (continuous motion)
- D type: Optimized for highly dynamic, intermittent duty cycles with up to 300 % overload (discontinuous motion)

Devices in booksize format C/D types are optimized for multi-axis applications and are mounted next to one another. The connection for the common DC link is an integral feature. The device is internally air cooled.

The Motor Modules in booksize format C/D types have been developed to be fully compatible with the booksize series regarding spare parts and offer the following advantages:

- The portfolio is extended by Single Motor Modules 18 A (C type), 24 A (C/D types) and 30 A (D type), as well as by a Double Motor Module 18 A (D type).
- The width of Motor Modules 45 A and 60 A has been reduced from 150 mm to 100 mm, which makes a significant contribution toward saving space in the cabinet
- The amount of space required beneath the Motor Modules has been reduced thanks to improvements in the design and a new motor plug connector
- With the new motor plug connector design, the brake conductors and the PE connection are integrated directly in the plug connector
- The motor connections on the Double Motor Module are located side by side, resulting in a significantly improved level of accessibility
- The fan can be simply replaced without having to remove the Motor Module

The signal cable shield can be connected to the Motor Module by means of a shield connection clamp, e.g. Weidmüller type KLBUE 3-8 SC.

The scope of delivery of the Motor Modules includes:

- DRIVE-CLiQ cable appropriate to the width of the Motor Module for connection to the adjacent Motor Module, length = width of Motor Module + 0.06 m (0.20 ft)
- Jumper for connecting the 24 V DC busbar to the adjacent Motor Module
- Connector X21
- Connector X11 for the motor brake connection (for Motor Modules 45 A to 200 A)
- 2 blanking plugs for sealing unused DRIVE-CLiQ sockets
- Fan insert for the 132 A and 200 A Motor Modules (the voltage for the fan insert is supplied by the Motor Module)
- 1 shield connection plate with shield connection clamp (for Motor Modules 3 A to 30 A)
- 1 set of warning labels in 30 languages

Integration

The Single Motor Module receives its control information via DRIVE-CLiQ from:

- CU320-2 Control Unit
- SINUMERIK 840D sl with
  - NCU 710.3B PN
  - NCU 720.3B PN
  - NCU 730.3B PN
  - Numeric Control Extensions NX10.3/NX15.3

© Siemens 2022

Technical specifications

Article No.	6SL3120-1TE...
Product designation	Single Motor Module in booksize format
DC link voltage	510 ... 720 V DC (line voltage 380 ... 480 V 3 AC)
Output frequency	
• Control mode Servo	0 ... 650 Hz [1) 2) 3)]
• Control mode Vector	0 ... 300 Hz [2)]
• Control mode V/f	0 ... 600 Hz [2) 3)]
Electronics power supply	24 V DC -15 %/+20 %
Type of cooling	Internal air cooling (power units with increased air cooling by built-in fan)
Permissible ambient and coolant temperature (air) during operation for line-side components, Line Modules and Motor Modules	0 ... 40 °C (32 ... 104 °F) without derating, >40 ... 55 °C (104 ... 131 °F), see derating characteristics
Installation altitude	Up to 1000 m (3281 ft) above sea level without derating, > 1000 ... 4000 m (3281 ... 13124 ft) above sea level, see derating characteristics
Declarations of conformity	CE (Low-Voltage and EMC Directives)
Certificate of suitability	cULus
Safety Integrated	Safety Integrity Level 2 (SIL 2) according to IEC 61508, Performance Level d (PL d) and Category 3 according to EN ISO 13849-1

1) At rated output current (max. output frequency 1300 Hz for 62.5 µs current control cycle, 8 kHz pulse frequency, 60 % permissible output current).

2) Note the correlation between max. output frequency, pulse frequency and current derating.

3) The output frequency is currently limited to 550 Hz. The specified values apply to systems with license for high output frequency.
For further information, see section Control Units and https://support.industry.siemens.com/cs/document/104020669

© Siemens 2022

Technical specifications (continued)

Article No.		–	–	–	6SL3120-1TE21-8AC0
Product designation		Single Motor Module in booksize format with internal air cooling C type			
Article No.		6SL3120-1TE13-0AD0	6SL3120-1TE15-0AD0	6SL3120-1TE21-0AD0	6SL3120-1TE21-8AD0
Product designation		Single Motor Module in booksize format with internal air cooling D type			
DC link voltage 510 ... 720 V DC					
Output current					
• Rated current I_{rated}	A	**3**	**5**	**9**	**18**
• Base-load current I_H	A	2.6	4.3	7.7	15.3
• For S6 duty (40 %) I_{S6}	A	4	6.7	12	24
• I_{max}					
- C type	A	–	–	–	36
- D type	A	9	15	27	54
Type rating [1]					
• Based on I_{rated}	kW (hp)	1.6 (1.5)	2.7 (3)	4.8 (5)	9.7 (10)
• Based on I_H	kW (hp)	1.4 (1)	2.3 (2.5)	4.1 (5)	8.2 (10)
Rated pulse frequency	kHz	4	4	4	4
DC link current I_d [2]	A	3.6	6	11	22
Current carrying capacity					
• DC link busbars	A	100 [3]	100 [3]	100 [3]	100 [3]
• 24 V DC busbars [4]	A	20	20	20	20
DC link capacitance	µF	110	110	110	220
Current requirement At 24 V DC, max.	A	0.75	0.75	0.75	0.75
Power loss [5] typ. [6]/max.	kW	0.03/0.05	0.04/0.07	0.06/0.1	0.14/0.19
Cooling air requirement	m^3/s (ft^3/s)	0.009 (0.32)	0.009 (0.32)	0.009 (0.32)	0.009 (0.32)
Sound pressure level L_{pA} (1 m)	dB	<60	<60	<60	<60
Motor connection U2, V2, W2		Plug-in connector (X1) [7], 1.5 ... 6 mm^2	Plug-in connector (X1) [7], 1.5 ... 6 mm^2	Plug-in connector (X1) [7], 1.5 ... 6 mm^2	Plug-in connector (X1) [7], 1.5 ... 6 mm^2
PE connection		M5 screw	M5 screw	M5 screw	M5 screw
Motor brake connection		Integrated into the plug-in motor connector (X1), 24 V DC, 2 A	Integrated into the plug-in motor connector (X1), 24 V DC, 2 A	Integrated into the plug-in motor connector (X1), 24 V DC, 2 A	Integrated into the plug-in motor connector (X1), 24 V DC, 2 A
Motor cable length, max.					
• Shielded	m (ft)	50 (164)	50 (164)	50 (164)	70 (230)
• Unshielded	m (ft)	75 (246)	75 (246)	75 (246)	100 (328)
Degree of protection		IP20	IP20	IP20	IP20
Dimensions					
• Width	mm (in)	50 (1.97)	50 (1.97)	50 (1.97)	50 (1.97)
• Height	mm (in)	380 (14.96)	380 (14.96)	380 (14.96)	380 (14.96)
• Depth	mm (in)	270 (10.63)	270 (10.63)	270 (10.63)	270 (10.63)
Net weight	kg (lb)	4.6 (10.1)	4.6 (10.1)	4.6 (10.1)	4.6 (10.1)

1) Rated power of a typical standard asynchronous (induction) motor at 600 V DC link voltage.

2) Rated DC link current for dimensioning an external DC connection.

3) With reinforced DC link bridges, (Article No. 6SL3162-2BB00-0AA0) 200 A is possible (Accessories).

4) If, due to a number of Line Modules and Motor Modules being mounted side by side, the current carrying capacity exceeds 20 A, an additional 24 V DC connection using a 24 V terminal adapter is required (max. cross-section 6 mm^2, max. fuse protection 20 A).

5) Power loss of Motor Module at rated power including losses of 24 V DC electronics power supply.

6) At max. motor cable length 30 m (98.43 ft), pulse frequency 4 kHz and DC link voltage 540 ... 600 V.

7) Connector not included in scope of delivery, see Accessories.

© Siemens 2022

Technical specifications (continued)

Article No.		6SL3120-1TE22-4AC0	6SL3120-1TE23-0AC0	6SL3120-1TE24-5AC0	6SL3120-1TE26-0AC0
Product designation		Single Motor Module in booksize format with internal air cooling C type			
Article No.		6SL3120-1TE22-4AD0	6SL3120-1TE23-0AD0	–	–
Product designation		Single Motor Module in booksize format with internal air cooling D type			
DC link voltage 510 ... 720 V DC					
Output current					
• Rated current I_{rated}	A	**24**	**30**	**45**	**60**
• Base-load current I_H	A	20.4	25.5	38	51
• For S6 duty (40 %) I_{S6}	A	32	40	60	80
• I_{max}					
- C type	A	48	56	90 [8]	120 [8]
- D type	A	72	90	–	–
Type rating [1]					
• Based on I_{rated}	kW (hp)	12.9 (15)	16 (20)	24 (30)	32 (40)
• Based on I_H	kW (hp)	10.9 (15)	13.7 (18)	21 (25)	28 (40)
Rated pulse frequency	kHz	4	4	4	4
DC link current I_d [2]	A	29	36	54	72
Current carrying capacity					
• DC link busbars	A	100 [3]	200	200	200
• 24 V DC busbars [4]	A	20	20	20	20
DC link capacitance	µF	390	705	1230	1410
Current requirement At 24 V DC, max.	A	1.0	0.8	0.9	0.9
Power loss [5] typ. [6]/max.	kW	0.19/0.20	0.26/0.31	0.34/0.36	0.46/0.48
Cooling air requirement	m^3/s (ft^3/s)	0.0147 (0.52)	0.0155 (0.55)	0.0233 (0.82)	0.0233 (0.82)
Sound pressure level L_{pA} (1 m)	dB	<68	<60	<71	<71
Motor connection U2, V2, W2		Plug-in connector (X1) [7], 1.5 ... 6 mm^2	Plug-in connector (X1) [7], 1.5 ... 6 mm^2	M6 screw studs (X1)	M6 screw studs (X1)
Shield connection		At the shield connection plate of the Motor Modules	At the shield connection plate of the Motor Modules	See Accessories	See Accessories
PE connection		M5 screw	M5 screw	M5 screw	M5 screw
Motor brake connection		Integrated into the plug-in motor connector (X1), 24 V DC, 2 A	Integrated into the plug-in motor connector (X1), 24 V DC, 2 A	Plug-in connector (X11), 24 V DC, 2 A	Plug-in connector (X11), 24 V DC, 2 A
Motor cable length, max.					
• Shielded	m (ft)	50 (164)	100 (328)	100 (328)	100 (328)
• Unshielded	m (ft)	75 (246)	150 (492)	150 (492)	150 (492)
Degree of protection		IP20	IP20	IP20	IP20
Dimensions					
• Width	mm (in)	50 (1.97)	100 (3.94)	100 (3.94)	100 (3.94)
• Height	mm (in)	380 (14.96)	380 (14.96)	380 (14.96)	380 (14.96)
• Depth	mm (in)	270 (10.63)	270 (10.63)	270 (10.63)	270 (10.63)
Net weight	kg (lb)	4.7 (10.4)	7.9 (17.4)	8.5 (18.7)	8.6 (19)

1) Rated power of a typical standard asynchronous (induction) motor at 600 V DC link voltage.
2) Rated DC link current for dimensioning an external DC connection.
3) With reinforced DC link bridges, (Article No. 6SL3162-2BB00-0AA0) 200 A is possible (Accessories).
4) If, due to a number of Line Modules and Motor Modules being mounted side by side, the current carrying capacity exceeds 20 A, an additional 24 V DC connection using a 24 V terminal adapter is required (max. cross-section 6 mm^2, max. fuse protection 20 A).
5) Power loss of Motor Module at rated power including losses of 24 V DC electronics power supply.
6) At max. motor cable length 30 m (98.43 ft), pulse frequency 4 kHz and DC link voltage 540 ... 600 V.
7) Connector not included in scope of delivery, see Accessories.
8) The specified values are valid as from firmware V4.8.

© Siemens 2022

Technical specifications (continued)

Article No.		6SL3120-1TE28-5AA3	6SL3120-1TE31-3AA3	6SL3120-1TE32-0AA4
Product designation		Single Motor Module in booksize format with internal air cooling		
DC link voltage 510 ... 720 V DC				
Output current				
• Rated current I_{rated}	A	**85**	**132**	**200**
• Base-load current I_H	A	68	105	141
• For S6 duty (40 %) I_{S6}	A	110	150	230
• I_{max}	A	141	210	282
Type rating [1]				
• Based on I_{rated}	kW (hp)	46 (60)	71 (100)	107 (150)
• Based on I_H	kW (hp)	37 (50)	57 (75)	76 (100)
Rated pulse frequency	kHz	4	4	4
DC link current I_d [2]	A	102	158	200
Current carrying capacity				
• DC link busbars	A	200	200	200
• 24 V DC busbars [3]	A	20	20	20
DC link capacitance	µF	1880	2820	3995
Current requirement At 24 V DC, max.	A	1.5	1.5	1.5
Power loss [4] typ. [5]/max.	kW	0.77/0.79	1.26/1.29	2.03/2.09
Cooling air requirement	m^3/s (ft^3/s)	0.044 (1.6)	0.144 (5.1)	0.144 (5.1)
Sound pressure level L_{pA} (1 m)	dB	<60	<73	<73
Motor connection U2, V2, W2		M8 screw studs (X1)	M8 screw studs (X1)	M8 screw studs (X1)
• Conductor cross-section, max.	mm^2	2.5 ... 95, 2 × 35	2.5 ... 120, 2 × 50	2.5 ... 120, 2 × 50
Shield connection		See Accessories	See Accessories	See Accessories
PE connection		M6 screw	M8 screw	M8 screw
Motor brake connection		Plug-in connector (X11), 24 V DC, 2 A	Plug-in connector (X11), 24 V DC, 2 A	Plug-in connector (X11), 24 V DC, 2 A
Motor cable length, max.				
• Shielded	m (ft)	100 (328)	100 (328)	100 (328)
• Unshielded	m (ft)	150 (492)	150 (492)	150 (492)
Degree of protection		IP20	IP20	IP20
Dimensions				
• Width	mm (in)	200 (7.87)	300 (11.81)	300 (11.81)
• Height	mm (in)	380 (14.96)	380 (14.96)	380 (14.96)
- With fan [6]	mm (in)	–	629 (24.76)	629 (24.76)
• Depth	mm (in)	270 (10.63)	270 (10.63)	270 (10.63)
Net weight	kg (lb)	14.8 (32.6)	21 (46.3)	21 (46.3)

[1] Rated power of a typical standard asynchronous (induction) motor at 600 V DC link voltage.

[2] Rated DC link current for dimensioning an external DC connection.

[3] If, due to a number of Line Modules and Motor Modules being mounted side-by-side, the current carrying capacity exceeds 20 A, an additional 24 V DC connection using a 24 V terminal adapter is required (max. cross-section 6 mm^2, max. fuse protection 20 A).

[4] Power loss of Motor Module at rated power including losses of 24 V DC electronics power supply.

[5] At max. motor cable length 30 m (98.43 ft), pulse frequency 4 kHz and DC link voltage 540 ... 600 V.

[6] The fan is supplied with the Motor Module and must be installed before the Motor Module is commissioned.

© Siemens 2022

Selection and ordering data

Rated output current	Type rating [1]	Single Motor Module in booksize format		
			C type	D type
A	kW (hp)	Article No.	Article No.	Article No.
DC link voltage 510 ... 720 V DC				
3	1.6 (1.5)	–	–	**6SL3120-1TE13-0AD0**
5	2.7 (3)	–	–	**6SL3120-1TE15-0AD0**
9	4.8 (5)	–	–	**6SL3120-1TE21-0AD0**
18	9.7 (10)	–	**6SL3120-1TE21-8AC0**	**6SL3120-1TE21-8AD0**
24	12.9 (15)	–	**6SL3120-1TE22-4AC0**	**6SL3120-1TE22-4AD0**
30	16 (20)	–	**6SL3120-1TE23-0AC0**	**6SL3120-1TE23-0AD0**
45	24 (30)	–	**6SL3120-1TE24-5AC0**	–
60	32 (40)	–	**6SL3120-1TE26-0AC0**	–
85	46 (60)	**6SL3120-1TE28-5AA3**	–	–
132	71 (100)	**6SL3120-1TE31-3AA3**	–	–
200	107 (150)	**6SL3120-1TE32-0AA4**	–	–

[1] Nominal hp ratings based on asynchronous (induction) motors. Match the motor nameplate current for specific sizing.

© Siemens 2022

Selection and ordering data (continued)

Description	Article No.
Accessories	
Power connector (X1) with screw-type terminal At Motor Module end, with screw-type terminals 1.5 ... 6 mm² For Motor Modules in booksize format C/D types with rated output current of 3 ... 30 A	**6SL3162-2MA00-0AC0**
Power connector (X1) with push-in connection with snap-in actuators At Motor Module end, with spring-loaded terminals 1.5 ... 6 mm² For Motor Modules in booksize format C/D types with rated output current of 3 ... 30 A	**6SL3162-2MB00-0AC0**
Shield connection plate For Motor Modules in booksize format with a width of	
• 100 mm (3.94 in) (Motor Modules in booksize format C type 45 A/60 A)	**6SL3162-1AD00-0AA0**
• 200 mm (7.87 in)	**6SL3162-1AH01-0AA0**
• 300 mm (11.81 in)	**6SL3162-1AH00-0AA0**
Shield connection clamp For Motor Modules in booksize format C type with rated output current of 45 A/60 A	
• Diameter 3 ... 14 mm (0.12 ... 0.55 in)	**8WH9130-0MA00**
• Diameter 20 ... 35 mm (0.79 ... 1.38 in)	**8WH9130-0PA00**
DC link rectifier adapter For direct infeed of DC link voltage	
• Screw-type terminals 0.5 ... 10 mm² For Motor Modules in booksize format with a width of 50 mm (1.97 in) or 100 mm (3.94 in) [1]	**6SL3162-2BD00-0AA0**
• Screw-type terminals 35 ... 95 mm² For Motor Modules in booksize format with a width of 200 mm or 300 mm (7.87 in and 11.81 in)	**6SL3162-2BM00-0AA0**
DC link adapter (2 units) For multi-tier configuration Screw-type terminals 35 ... 95 mm² For all Line Modules and Motor Modules in booksize format	**6SL3162-2BM01-0AA0**
24 V terminal adapter For all Line Modules and Motor Modules in booksize format	**6SL3162-2AA00-0AA0**
Reinforced DC link bridge 6 mm (0.24 in) For replacement of the DC link bridge in Single Motor Modules 3 A ... 24 A Double Motor Modules 2 x 3 A ... 2 x 9 A	**6SL3162-2BB00-0AA0**

Description	Article No.
Accessories for re-ordering	
24 V jumper For connection of the 24 V busbars (for booksize format)	**6SL3162-2AA01-0AA0**
Terminal Kit for Motor Modules C/D types, 3 A to 30 A (24 V jumper, plug-in terminals, DRIVE-CLiQ jumper (length = module width + 60 mm (2.36 in)), shield connection clamp with pressure plate, dust protection blanking plugs, coding plug for X1) For Motor Modules with a width of	
• 50 mm (1.97 in), C/D type	**6SL3162-8AC00-0AA0**
• 100 mm (3.94 in), C/D type	**6SL3162-8BE00-0AA0**
Terminal Kit for Motor Modules 45 A to 200 A (24 V jumper, plug-in terminals, DRIVE-CLiQ jumper (length = module width + 60 mm (2.36 in)), dust protection blanking plugs) For Motor Modules with a width of	
• 100 mm (3.94 in), C type	**6SL3162-8BG00-0AA0**
• 200 mm (7.87 in)	**6SL3162-8DH00-0AA0**
• 300 mm (11.81 in)	**6SL3162-8EM00-0AA0**
Shield connection clamp For Single Motor Modules in booksize format C/D types with rated output current of 3 A to 30 A	**6SL3162-0AQ00-0AA0**
Warning labels in 30 languages This label set can be glued over the standard English or German labels to provide warnings in other languages. One set of labels is supplied with the devices. One sign in each of the following languages is provided in each set: BG, CN, CZ, DE, DK, EE, ES, FI, FR, GB, GR, HU, IE, IS, IT, JP, KR, LT, LV, MT, NL, NO, PL, PT, RO, RU, SE, SI, SK, TR	**6SL3166-3AB00-0AA0**
Dust protection blanking plugs (50 units) For DRIVE-CLiQ port	**6SL3066-4CA00-0AA0**
Replacement fan For Motor Modules with a width of	
• 50 mm (1.97 in), C/D type (3 A ... 18 A)	**6SL3162-0AN00-0AA0**
• 50 mm (1.97 in), C/D type (24 A)	**6SL3162-0AS00-0AA0**
• 100 mm (3.94 in), C/D type (30 A)	**6SL3162-0AP00-0AA0**
• 100 mm (3.94 in), C type (45 A and 60 A)	**6SL3162-0AT00-0AA0**
• 200 mm (7.87 in) (85 A)	**6SL3162-0AH00-0AA1**
• 300 mm (11.81 in) (132 A and 200 A)	**6SL3162-0AM00-0AA0**

[1] **NOTICE**: The DC link rectifier adapter must **not** be used for Motor Modules C type, 45 A and 60 A.

© Siemens 2022

Characteristic curves

Overload capability

Motor Modules in booksize format C type 18 A to 60 A and booksize format 85 A to 200 A

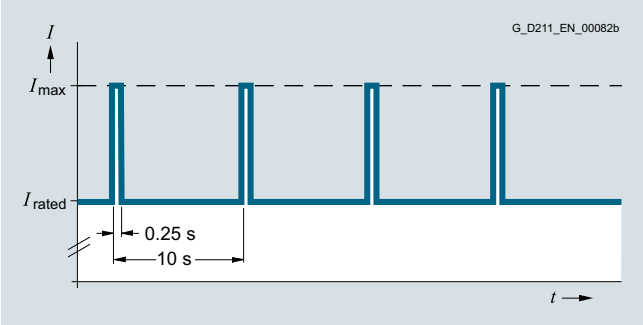

Duty cycle with previous load

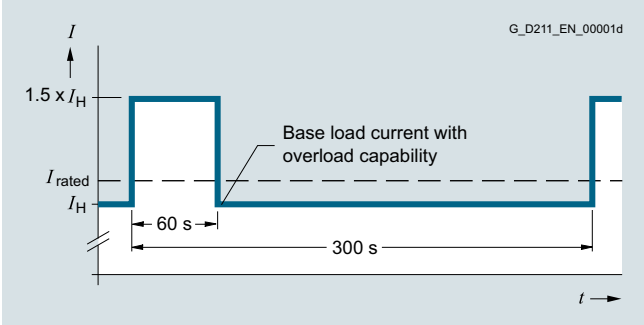

Duty cycle with 60 s overload with a duty cycle duration of 300 s

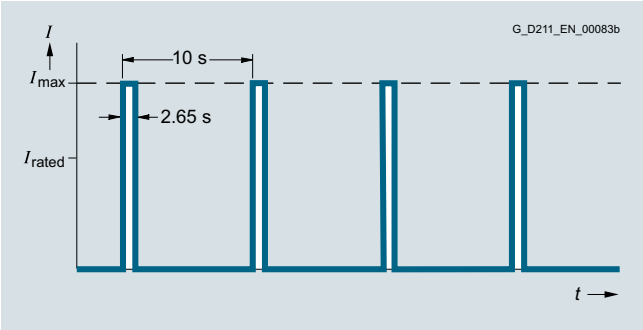

Duty cycle without previous load

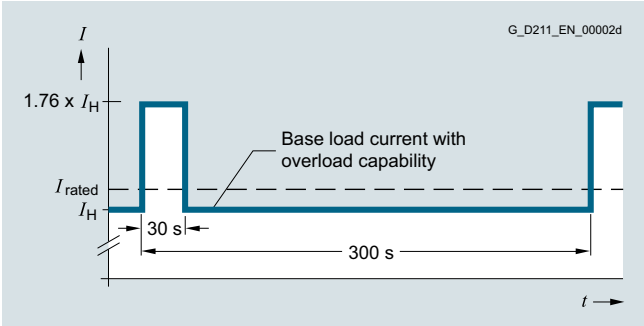

Duty cycle with 30 s overload with a duty cycle duration of 300 s

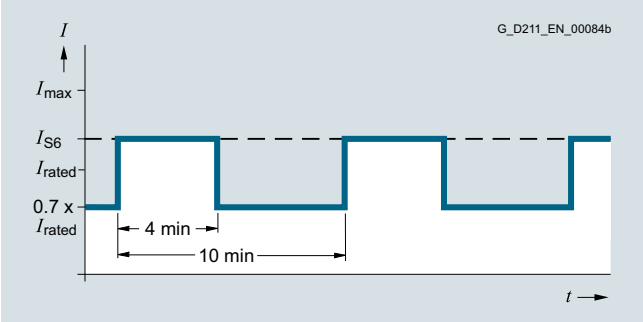

S6 duty cycle with previous load with a duty cycle duration of 600 s

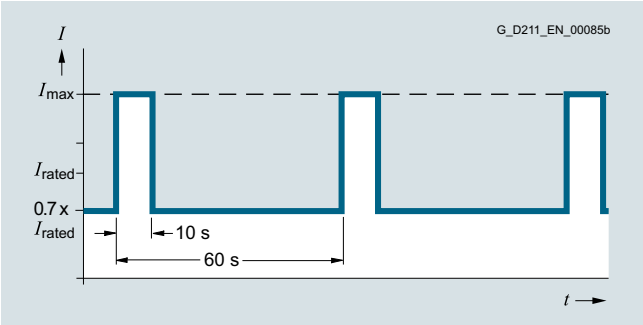

S6 duty cycle with previous load with a duty cycle duration of 60 s

© Siemens 2022

Characteristic curves (continued)

Motor Modules in booksize format D type, 3 A to 30 A

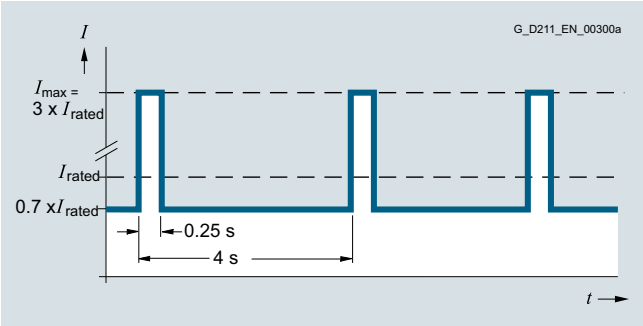

Peak current duty cycle with previous load (300 % overload)

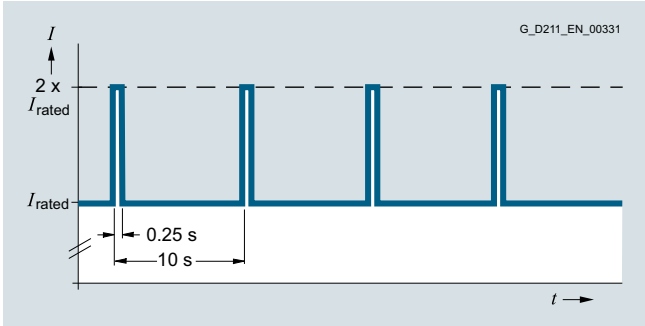

Duty cycle with previous load

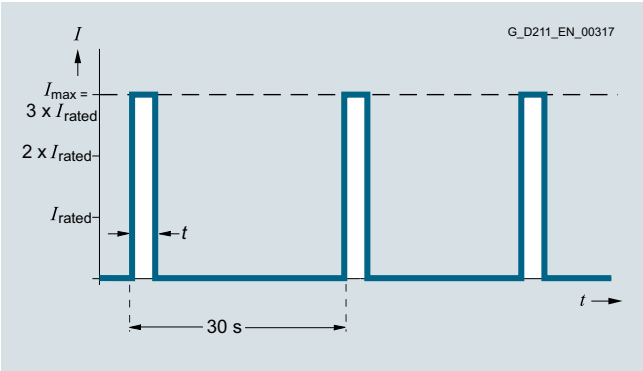

Peak current duty cycle without previous load (300 % overload)

Single Motor Module	Time *t* at I_{max}
3 A	0.5 s
5 A	0.5 s
9 A	0.5 s
18 A	1.25 s
24 A	1.25 s
30 A	3 s

Note:

The duty cycle shown above is not permissible for a pulse frequency of 16 kHz. The current must be derated for a pulse frequency of 8 kHz.

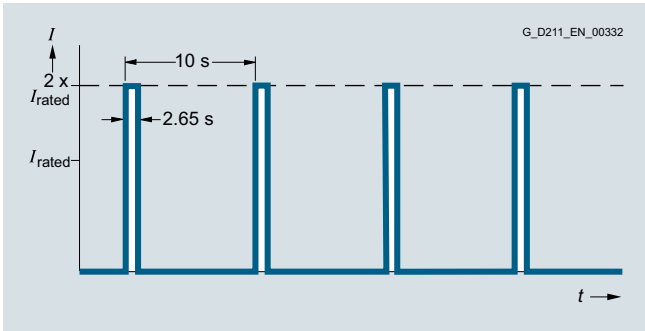

Duty cycle without previous load

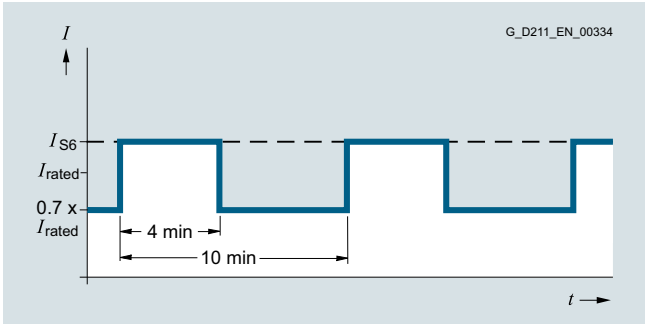

S6 duty cycle with previous load with a duty cycle duration of 600 s

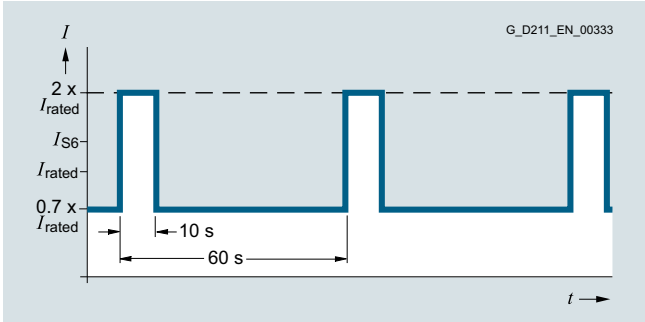

S6 duty cycle with previous load with a duty cycle duration of 60 s

© Siemens 2022

Characteristic curves (continued)

Motor Modules in booksize format D type, 3 A to 30 A (continued)

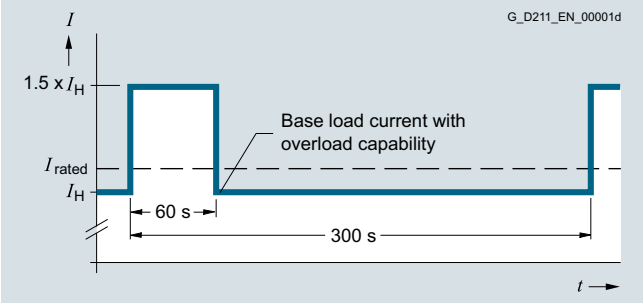

Duty cycle with 60 s overload with a duty cycle duration of 300 s

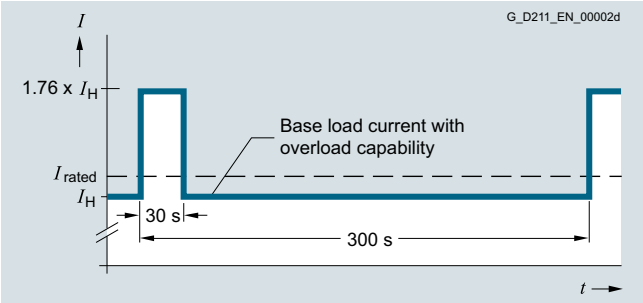

Duty cycle with 30 s overload with a duty cycle duration of 300 s

Derating characteristics

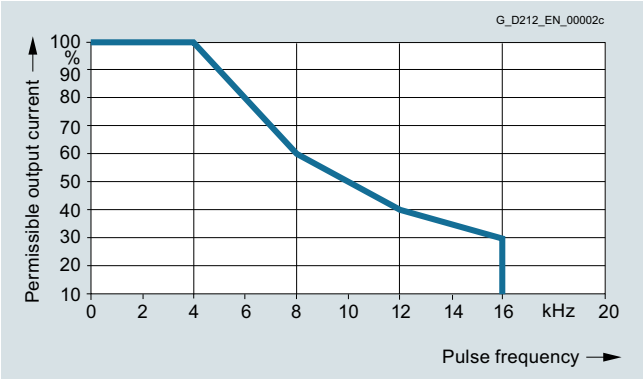

Output current as a function of pulse frequency
(Single Motor Modules, 3 A to 132 A)

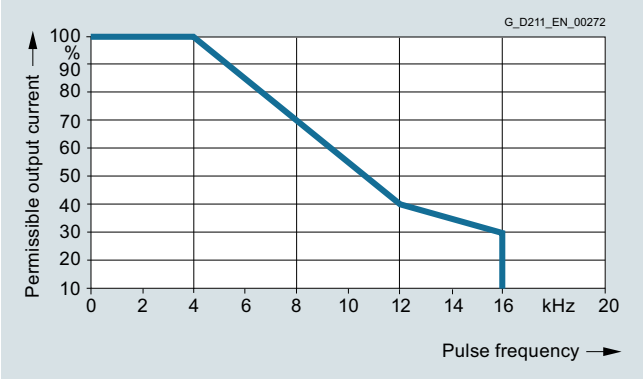

Output current as a function of pulse frequency
(Single Motor Modules, 200 A)

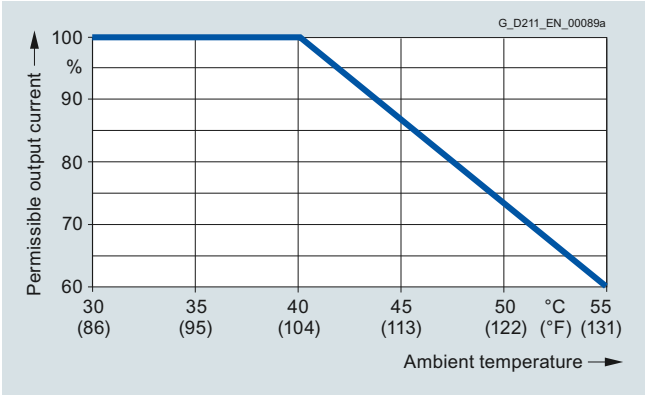

Output current as a function of ambient temperature

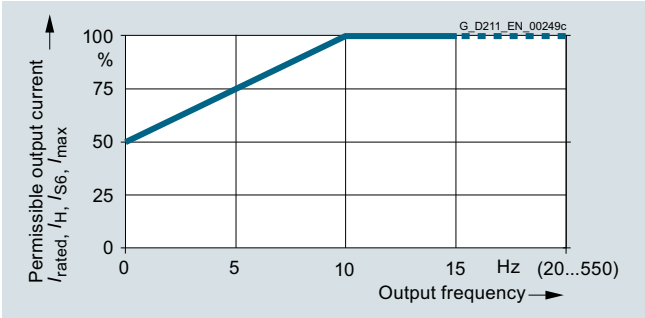

Output current as a function of output frequency
(Single Motor Modules in booksize format, 85 A to 200 A)

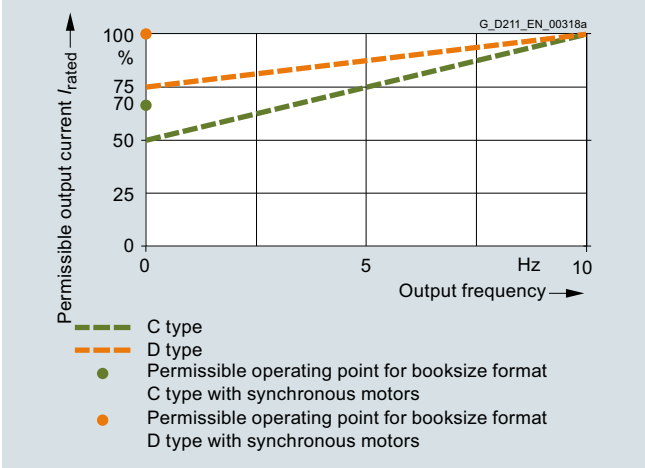

Output current at low output frequencies
(Single Motor Modules in booksize format C/D types, 3 A to 60 A)

Installation altitude

- >1000 ... 4000 m (3281 ... 13124 ft) above sea level
  - Reduction of the output current by 10 % per 1000 m (3281 ft), or
  - Reduction of the ambient temperature by 5 °C (9 °F) per 1000 m (3281 ft)
- >2000 ... 4000 m (6562 ... 13124 ft) above sea level
  - Operation on line supply systems with grounded neutral point, or
  - Operation with an isolating transformer with secondary grounded neutral point

© Siemens 2022

Design

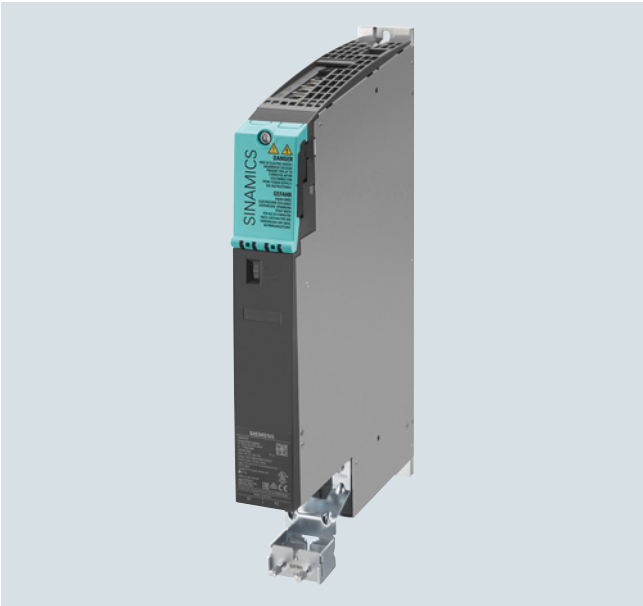

Double Motor Module in booksize format C/D type

Double Motor Modules feature the following connections and interfaces as standard:

- 2 DC link connections via integrated DC link busbars
- 2 electronics power supply connections via integrated 24 V DC busbars
- 4 DRIVE-CLiQ sockets
- 2 motor connections via connectors X1 and X2 (not included in the scope of delivery)
- 2 safe standstill inputs (1 input per axis)
- 2 safe motor brake controls
- 2 temperature sensor inputs for KTY84-130, Pt1000 or PTC (Pt1000 can be used from firmware V4.7 HF17)
- 1 PE (protective earth) connection

The status of the Motor Modules is indicated via two multi-color LEDs.

The Motor Modules are supplied with a mounted shield connection plate. The associated shield connection clamp can be found in the Terminal Kit supplied.

Motor Modules in booksize format C/D types, 2 × 3 A to 2 × 18 A

Rated current	3 A	5 A	9 A	18 A	24 A	30 A	45 A	60 A
	D types							
Single Motor Modules	**3 A / 9 A** 50 mm (1.97 in)	**5 A / 15 A** 50 mm (1.97 in)	**9 A / 27 A** 50 mm (1.97 in)	**18 A / 54 A** 50 mm (1.97 in)	**24 A / 72 A** 50 mm (1.97 in)	**30 A / 90 A** 100 mm (3.94 in)	–	–
Double Motor Modules	**2 x 3 A / 2 x 9 A** 50 mm (1.97 in)	**2 x 5 A / 2 x 15 A** 50 mm (1.97 in)	**2 x 9 A / 2 x 27 A** 50 mm (1.97 in)	**2 x 18 A / 2 x 54 A** 100 mm (3.94 in)	–	–	–	–
			C types					
			Single Motor Modules	**18 A / 36 A** 50 mm (1.97 in)	**24 A / 48 A** 50 mm (1.97 in)	**30 A / 56 A** 100 mm (3.94 in)	**45 A / 90 A** 100 mm (3.94 in)	**60 A / 120 A** 100 mm (3.94 in)
Rated current / maximum current in A 50 mm (1.97 in) or 100 mm (3.94 in) widths			Double Motor Module	**2 x 18 A / 2 x 36 A** 100 mm (3.94 in)	–	–	–	–

G_PM21_EN_00267a

Overview of available Double Motor Modules in booksize format C/D types

- C type: Optimized for continuous load with up to 200 % overload (continuous motion)
- D type: Optimized for highly dynamic, intermittent duty cycles with up to 300 % overload (discontinuous motion)

Devices in booksize format C/D types are optimized for multi-axis applications and are mounted next to one another. The connection for the common DC link is an integral feature. The device is internally air cooled.

© Siemens 2022

Design (continued)

The Motor Modules in booksize format C/D types have been developed to be fully compatible with the booksize series regarding spare parts and offer the following advantages:

- The amount of space required beneath the Motor Modules has been reduced thanks to improvements in the design and a new motor plug connector
- With the new motor plug connector design, the brake conductors and the PE connection are integrated directly in the plug connector
- The motor connections on the Double Motor Module are located side by side, resulting in a significantly improved level of accessibility
- The fan can be simply replaced without having to remove the Motor Module
- The Double Motor Module 2 x 18 A is available with double and treble overload

The signal cable shield can be connected to the Motor Module by means of a shield connection clamp, e.g. Weidmüller type KLBUE 3-8 SC.

The scope of delivery of the Motor Modules includes:

- DRIVE-CLiQ cable appropriate to the width of the Motor Module for connection to the adjacent Motor Module, length = width of Motor Module + 0.06 m (0.20 ft)
- 2 blanking plugs for sealing unused DRIVE-CLiQ sockets
- Jumper for connecting the 24 V DC busbar to the adjacent Motor Module
- Connectors X21 and X22
- Device fans supplied from the internal voltage levels for cooling the power unit
- 1 shield connection plate with shield connection clamp
- 1 set of warning labels in 30 languages

Integration

The Double Motor Module receives its control information via DRIVE-CLiQ from:

- CU320-2 Control Unit
- SINUMERIK 840D sl with
  - NCU 710.3B PN
  - NCU 720.3B PN
  - NCU 730.3B PN
  - Numeric Control Extensions NX10.3/NX15.3

Technical specifications

Article No.	6SL3120-2TE...
Product designation	Double Motor Module in booksize format
DC link voltage	510 ... 720 V DC (line voltage 380 ... 480 V 3 AC)
Output frequency	
• Control mode Servo	0 ... 650 Hz [1) 2) 3)]
• Control mode Vector	0 ... 300 Hz [2)]
• Control mode V/f	0 ... 600 Hz [2) 3)]
Electronics power supply	24 V DC -15 %/+20 %
Type of cooling	Internal air cooling (power units with increased air cooling by built-in fan)
Permissible ambient and coolant temperature (air) during operation for line-side components, Line Modules and Motor Modules	0 ... 40 °C (32 ... 104 °F) without derating, >40 ... 55 °C (104 ... 131 °F), see derating characteristics
Installation altitude	Up to 1000 m (3281 ft) above sea level without derating, > 1000 ... 4000 m (3281 ... 13124 ft) above sea level, see derating characteristics
Declarations of conformity	CE (Low-Voltage and EMC Directives)
Certificate of suitability	cULus
Safety Integrated	Safety Integrity Level 2 (SIL 2) according to IEC 61508, Performance Level d (PL d) and Category 3 according to EN ISO 13849-1

1) At rated output current (max. output frequency 1300 Hz for 62.5 µs current control cycle, 8 kHz pulse frequency, 60 % permissible output current).

2) Note the correlation between max. output frequency, pulse frequency and current derating.

3) The output frequency is currently limited to 550 Hz. The specified values apply to systems with license for high output frequency.
For further information, see section Control Units and https://support.industry.siemens.com/cs/document/104020669

© Siemens 2022

Technical specifications (continued)

Article No.		–	–	–	6SL3120-2TE21-8AC0
Product designation		Double Motor Module in booksize format with internal air cooling C type			
Article No.		6SL3120-2TE13-0AD0	6SL3120-2TE15-0AD0	6SL3120-2TE21-0AD0	6SL3120-2TE21-8AD0
Product designation		Double Motor Module in booksize format with internal air cooling D type			
DC link voltage 510 ... 720 V DC					
Output current					
• Rated current I_{rated}	A	2 × 3	2 × 5	2 × 9	2 × 18
• For S6 duty (40 %) I_{S6}					
- C type	A	–	–	–	2 × 24
- D type	A	2 × 4	2 × 6.7	2 × 12	2 × 24
• Base-load current I_H	A	2 × 2.6	2 × 4.3	2 × 7.7	2 × 15.3
• I_{max}					
- C type	A	–	–	–	2 × 36
- D type	A	2 × 9	2 × 15	2 × 27	2 × 54
Type rating [1]					
• Based on I_{rated}	kW (hp)	2 × 1.6 (1.5)	2 × 2.7 (3)	2 × 4.8 (5)	2 × 9.7 (10)
• Based on I_H	kW (hp)	2 × 1.4 (1)	2 × 2.3 (2.5)	2 × 4.1 (5)	2 × 8.2 (10)
DC link current I_d [2]	A	7.2	12	22	43
Current carrying capacity					
• DC link busbars	A	100	100	100	100
• 24 V DC busbars [3]	A	20	20	20	20
DC link capacitance	µF	220	220	220	705
Current requirement At 24 V DC, max.	A	0.9	0.9	0.9	1.1
Power loss [4] typ. [5]/max.	kW	0.05/0.1	0.08/0.13	0.15/0.19	0.28/0.35
Cooling air requirement	m^3/s (ft^3/s)	0.009 (0.32)	0.009 (0.32)	0.009 (0.32)	0.0155 (0.55)
Sound pressure level L_{pA} (1 m)	dB	<60	<60	<60	<60
Motor connection U2, V2, W2		2 × plug-in connector (X1, X2) [6], 2 × (1.5 ... 6 mm^2)	2 × plug-in connector (X1, X2) [6], 2 × (1.5 ... 6 mm^2)	2 × plug-in connector (X1, X2) [6], 2 × (1.5 ... 6 mm^2)	2 × plug-in connector (X1, X2) [6], 2 × (1.5 ... 6 mm^2)
PE connection		M5 screw	M5 screw	M5 screw	M5 screw
Motor brake connection		Integrated into the plug-in motor connector (X1, X2), 24 V DC, 2 A	Integrated into the plug-in motor connector (X1, X2), 24 V DC, 2 A	Integrated into the plug-in motor connector (X1, X2), 24 V DC, 2 A	Integrated into the plug-in motor connector (X1, X2), 24 V DC, 2 A
Motor cable length, max.					
• Shielded	m (ft)	50 (164)	50 (164)	50 (164)	70 (230)
• Unshielded	m (ft)	75 (246)	75 (246)	75 (246)	100 (328)
Degree of protection		IP20	IP20	IP20	IP20
Dimensions					
• Width	mm (in)	50 (1.97)	50 (1.97)	50 (1.97)	100 (3.94)
• Height	mm (in)	380 (14.96)	380 (14.96)	380 (14.96)	380 (14.96)
• Depth	mm (in)	270 (10.63)	270 (10.63)	270 (10.63)	270 (10.63)
Net weight	kg (lb)	4.7 (10.4)	4.7 (10.4)	4.7 (10.4)	7.7 (17.0)

1) Rated power of a typical standard asynchronous (induction) motor at 600 V DC link voltage.

2) Rated DC link current for dimensioning an external DC connection.

3) If, due to a number of Line Modules and Motor Modules being mounted side-by-side, the current carrying capacity exceeds 20 A, an additional 24 V DC connection using a 24 V terminal adapter is required (max. cross-section 6 mm^2, max. fuse protection 20 A).

4) Power loss of Motor Module at rated power including losses of 24 V DC electronics power supply.

5) At max. motor cable length 30 m (98.43 ft), pulse frequency 4 kHz and DC link voltage 540 ... 600 V.

6) Connector not included in scope of delivery, see Accessories.

© Siemens 2022

Selection and ordering data

Rated output current	Type rating[1]	Double Motor Module in booksize format	
		C type	D type
A	kW (hp)	Article No.	Article No.
DC link voltage 510 ... 720 V DC			
2 × 3	2 × 1.6 (2 × 1.5)	–	**6SL3120-2TE13-0AD0**
2 × 5	2 × 2.7 (2 × 3)	–	**6SL3120-2TE15-0AD0**
2 × 9	2 × 4.8 (2 × 5)	–	**6SL3120-2TE21-0AD0**
2 × 18	2 × 9.7 (2 × 10)	**6SL3120-2TE21-8AC0**	**6SL3120-2TE21-8AD0**

Description	Article No.
Accessories	
Power connector (X1/X2) with screw-type terminal At Motor Module end, with screw-type terminals 1.5 ... 6 mm^2 For Motor Modules in booksize format C/D types with rated output current of 3 ... 30 A	**6SL3162-2MA00-0AC0**
Power connector (X1/X2) with push-in connection with snap-in actuators At Motor Module end, with spring-loaded terminals 1.5 ... 6 mm^2 For Motor Modules in booksize format C/D types with rated output current of 3 ... 30 A	**6SL3162-2MB00-0AC0**
DC link rectifier adapter For direct infeed of DC link voltage Screw-type terminals 0.5 ... 10 mm^2 For Motor Modules in booksize format with a width of 50 mm (1.97 in) or 100 mm (3.94 in)	**6SL3162-2BD00-0AA0**
DC link adapter (2 units) For multi-tier configuration Screw-type terminals 35 ... 95 mm^2 For all Line Modules and Motor Modules in booksize format	**6SL3162-2BM01-0AA0**
24 V terminal adapter For all Line Modules and Motor Modules in booksize format	**6SL3162-2AA00-0AA0**
Reinforced DC link bridge 6 mm (0.24 in) For replacement of the DC link bridge in Single Motor Modules 3 A ... 24 A Double Motor Modules 2 x 3 A ... 2 x 9 A	**6SL3162-2BB00-0AA0**

Description	Article No.
Accessories for re-ordering	
24 V jumper For connection of the 24 V busbars (for booksize format)	**6SL3162-2AA01-0AA0**
Terminal Kit (24 V jumper, plug-in terminals, DRIVE-CLiQ jumper (length = module width + 60 mm (2.36 in)), shield connection clamp with pressure plate, dust protection blanking plugs, coding plug for X1 and X2) For Motor Modules with a width of	
• 50 mm (1.97 in), C/D type	**6SL3162-8AD00-0AA0**
• 100 mm (3.94 in), C/D type	**6SL3162-8BF00-0AA0**
Shield connection clamp For Double Motor Modules in booksize format C/D types	**6SL3162-0AR00-0AA0**
Warning labels in 30 languages This label set can be glued over the standard English or German labels to provide warnings in other languages. One set of labels is supplied with the devices. One sign in each of the following languages is provided in each set: BG, CN, CZ, DE, DK, EE, ES, FI, FR, GB, GR, HU, IE, IS, IT, JP, KR, LT, LV, MT, NL, NO, PL, PT, RO, RU, SE, SI, SK, TR	**6SL3166-3AB00-0AA0**
Dust protection blanking plugs (50 units) For DRIVE-CLiQ port	**6SL3066-4CA00-0AA0**
Replacement fan For Motor Modules with a width of	
• 50 mm (1.97 in), C/D type	**6SL3162-0AN00-0AA0**
• 100 mm (3.94 in), C/D type	**6SL3162-0AP00-0AA0**

[1] Nominal hp ratings based on asynchronous (induction) motors. Match the motor nameplate current for specific sizing.

© Siemens 2022

Characteristic curves

Overload capability

Motor Modules in booksize format C type

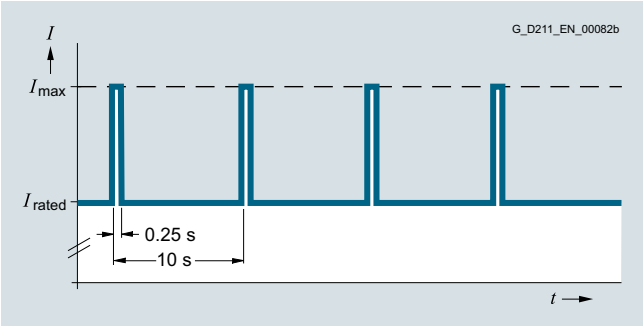

Duty cycle with previous load

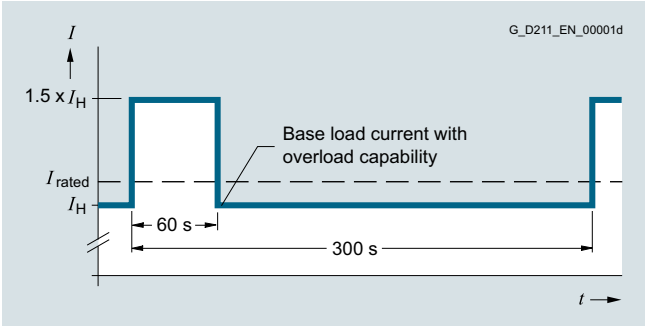

Duty cycle with 60 s overload with a duty cycle duration of 300 s

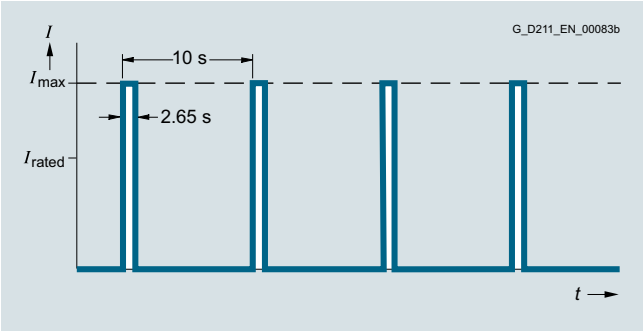

Duty cycle without previous load

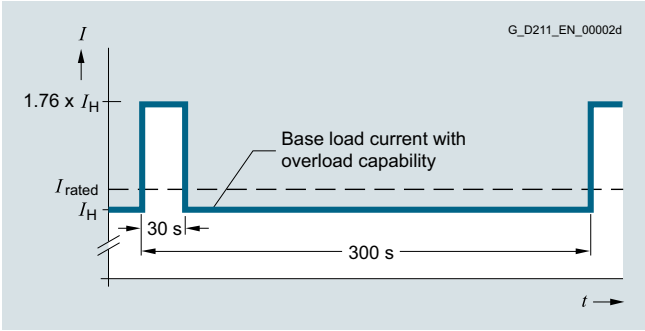

Duty cycle with 30 s overload with a duty cycle duration of 300 s

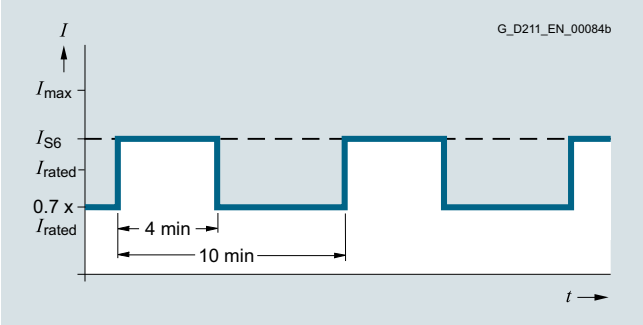

S6 duty cycle with previous load with a duty cycle duration of 600 s

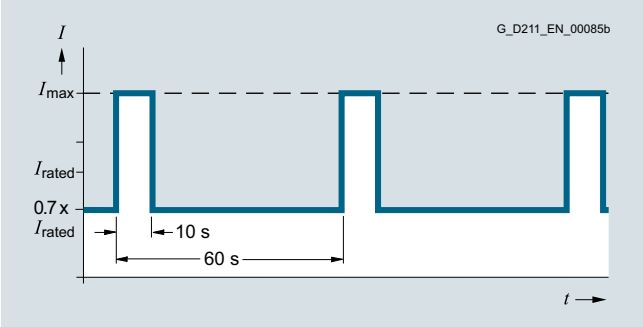

S6 duty cycle with previous load with a duty cycle duration of 60 s

© Siemens 2022

Characteristic curves (continued)

Motor Modules in booksize format D type

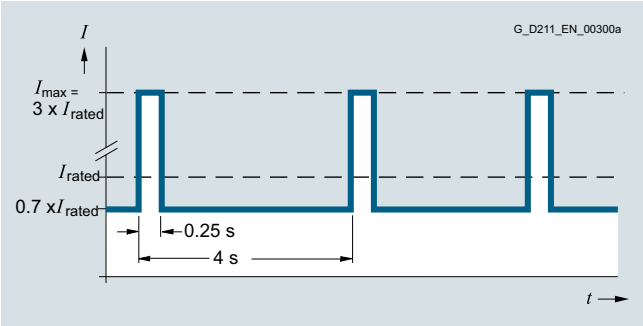

Peak current duty cycle with previous load (300 % overload)

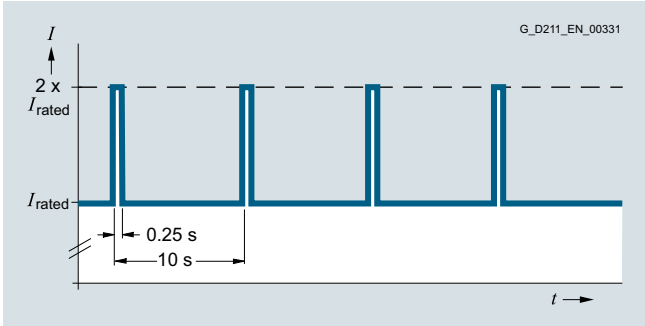

Duty cycle with previous load

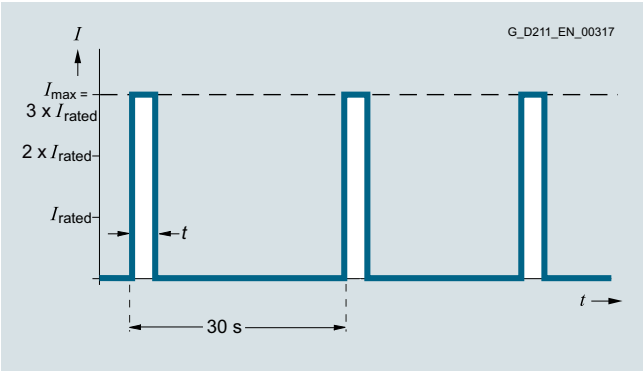

Peak current duty cycle without previous load (300 % overload)

Double Motor Module	Time *t* at I_{max}
2 × 3 A	0.5 s
2 × 5 A	0.5 s
2 × 9 A	0.5 s
2 × 18 A	1.25 s

Note:

The duty cycle shown above is not permissible for a pulse frequency of 16 kHz. The current must be derated for a pulse frequency of 8 kHz.

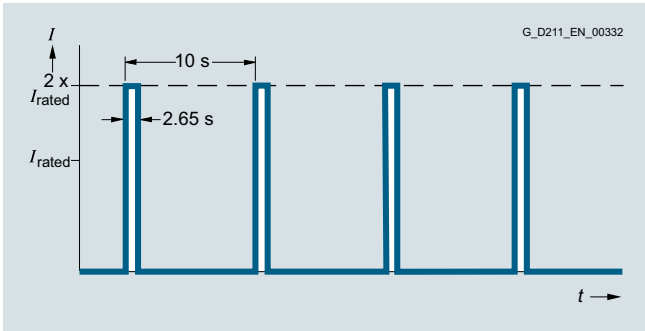

Duty cycle without previous load

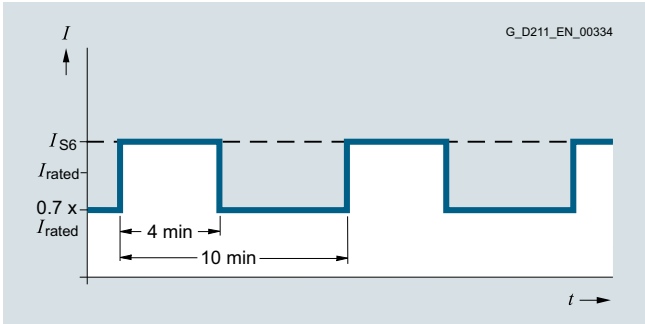

S6 duty cycle with previous load with a duty cycle duration of 600 s

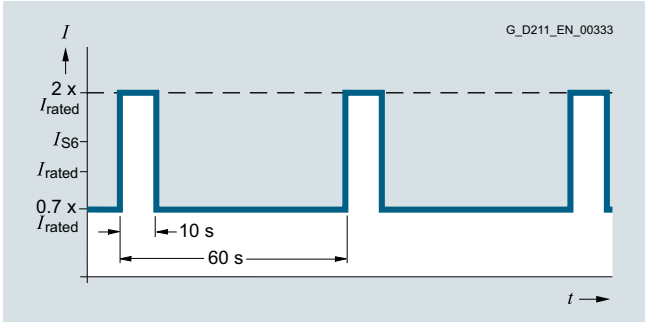

S6 duty cycle with previous load with a duty cycle duration of 60 s

© Siemens 2022

Characteristic curves (continued)

Motor Modules in booksize format D type (continued)

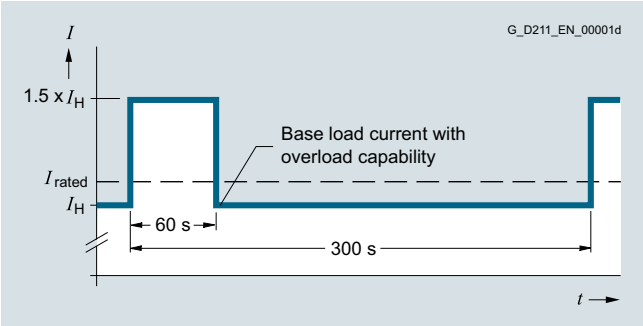

Duty cycle with 60 s overload with a duty cycle duration of 300 s

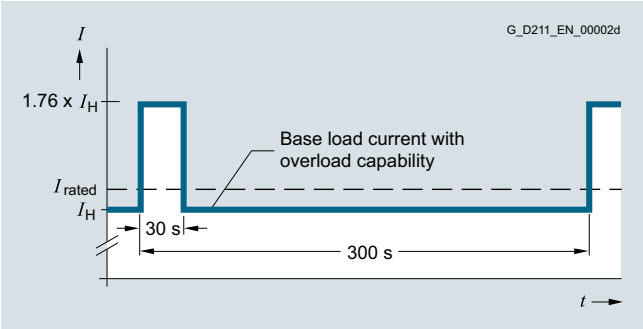

Duty cycle with 30 s overload with a duty cycle duration of 300 s

Derating characteristics

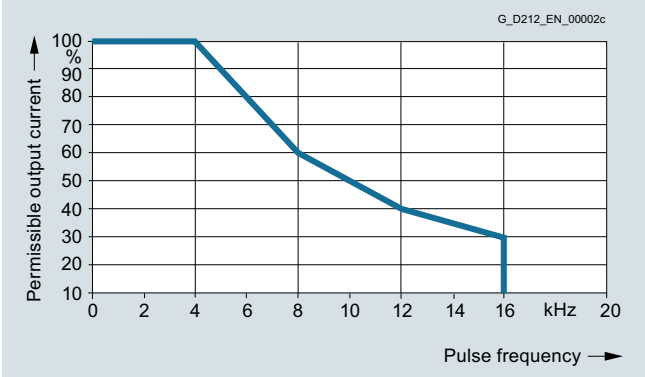

Output current as a function of pulse frequency

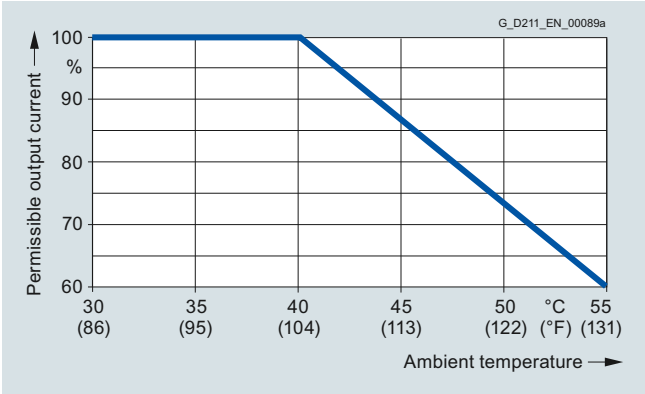

Output current as a function of ambient temperature

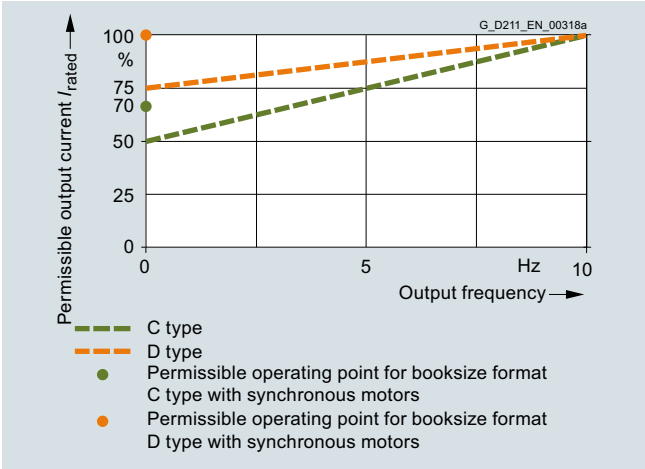

Output current at low output frequencies

Installation altitude

- >1000 ... 4000 m (3281 ... 13124 ft) above sea level
  - Reduction of the output current by 10 % per 1000 m (3281 ft), or
  - Reduction of the ambient temperature by 5 °C (9 °F) per 1000 m (3281 ft)
- >2000 ... 4000 m (6562 ... 13124 ft) above sea level
  - Operation on line supply systems with grounded neutral point, or
  - Operation with an isolating transformer with secondary grounded neutral point

© Siemens 2022

Overview

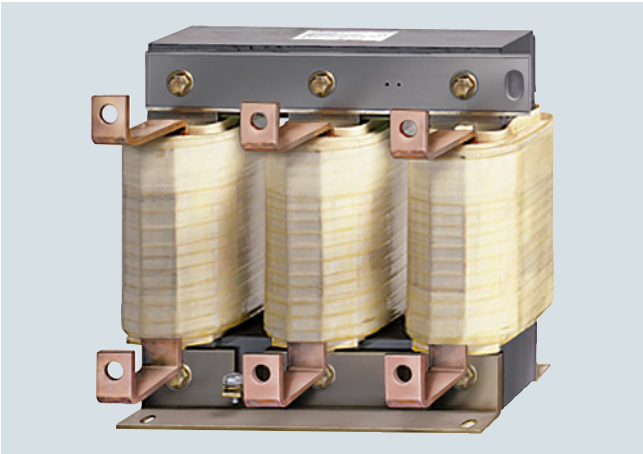

A series reactor in the form of a three-limb iron-cored reactor may be required in the case of special motors with low leakage inductance (for which the controller settings are insufficient). Motors with a low leakage inductance are, from experience, motors that can achieve high stator frequencies > 300 Hz or motors with a high rated current > 85 A.

The series motor reactors are designed for a pulse frequency of 4 kHz or 8 kHz output from the Motor Module. Higher pulse frequencies are not permissible.

Overview (continued)

The series motor reactor must be installed as close as possible to the Motor Module.

The voltage drop across a series reactor depends on the motor current and the motor frequency. If an unregulated infeed is used, the maximum rated motor voltage depends on the connected line supply voltage. If these guide values are observed, lower reductions in power in the upper speed range of the motor can be achieved.

The surface temperature of the series motor reactor can reach up to 100 °C (212 °F). This additional heat source must be taken into account in the system.

The notes in the Configuration Manual for the motors used must be observed.

Selection and ordering data

Suitable for Motor Module in booksize format Internal air cooling External air cooling	**Series motor reactor**		
	Rated current	Rated inductance	
Type	A	mH	**Article No.**
6SL3120-.....-....	108	0.1	**4EU3951-0AR00-4B**

Technical specifications

Article No.		4EU3951-0AR00-4B
Product designation		Series motor reactor
Input voltage 380 ... 480 V 3 AC (DC link voltage 510 ... 720 V DC)		
Rated current	A	108
Rated inductance	mH	0.1
Power loss	W	454
Continuous current I_{thmax}, therm. perm.	A	120
Continuous frequency therm. perm.	Hz	1400
Pulse frequency, max.	kHz	8
Relative voltage drop at the series motor reactor At I_{thmax} and V_{rated}	%	38
Ambient temperature	°C (°F)	40 (104)
Connection to Motor Module/motor		Flat-type terminal
PE connection		M8 screw
Degree of protection		IP00
Width	mm (in)	410 mm (16.14)
Height	mm (in)	385 mm (15.16)
Depth	mm (in)	174 mm (6.85)
Net weight	kg (lb)	68 kg (150)
Certificate of suitability		cURus

© Siemens 2022

Overview

Braking Module in booksize format

A Braking Module and the matching external braking resistor are required to bring drives to a controlled standstill in the event of a power failure (e.g. emergency retraction or EMERGENCY STOP category 1) or limit the DC link voltage for brief periods of generator operation, e.g. when the regenerative feedback capability of the Line Module is deactivated. The Braking Module includes the power electronics and the associated control circuit. During operation, the DC link energy is converted into heat loss in an external braking resistor. Braking Modules function autonomously.

Braking Modules in booksize format can also be used for rapid discharge of the DC link.

Design

The Braking Module in booksize format features the following connections and interfaces as standard:

- 2 DC link connections via integrated DC link busbars
- 2 electronics power supply connections via integrated 24 V DC bars
- Terminals for connecting the braking resistor
- 2 digital inputs (disable Braking Module/acknowledge faults and rapid discharge of DC link)
- 2 digital outputs (Braking Module disabled and prewarning – $I \times t$ monitoring)
- 2 PE (protective earth) connections

The status of the Braking Module is indicated via two 2-color LEDs.

Technical specifications

Article No.	6SL3100-1AE31-0AB1
Product designation	Braking Module in booksize format with internal air cooling
DC link voltage 510 ... 720 V DC	
Rated power P_{DB}	1.5 kW [1]
Peak power P_{max}	100 kW [1]
Activation threshold	770 V
Cable length to braking resistor, max.	10 m (32.81 ft)
DC link capacitance	110 µF
Current requirement with 24 V DC, max.	0.5 A
Digital inputs In accordance with IEC 61131-2 Type 1	
• Voltage	-3 V ... +30 V
• Low level (an open digital input is interpreted as "low")	-3 V ... +5 V
• High level	15 ... 30 V
• Current consumption at 24 V DC, typ.	10 mA
• Conductor cross-section, max.	1.5 mm²
Digital outputs (continuously short-circuit proof)	
• Voltage	24 V DC
• Load current per digital output, max.	100 mA
• Conductor cross-section, max.	1.5 mm²
Current carrying capacity	
• 24 V DC busbars	20 A
• DC link busbars	100 A
PE connection	M5 screw
Dimensions	
• Width	50 mm (1.97 in)
• Height	380 mm (14.96 in)
• Depth, with spacer (included in scope of supply)	270 mm (10.63 in)
Net weight	4.1 kg (9 lb)
Certificate of suitability	cURus

Selection and ordering data

Description	Article No.
DC link voltage 510 ... 720 V DC	
Braking Module in booksize format	**6SL3100-1AE31-0AB1**
Accessories	
Warning labels in 30 languages This label set can be glued over the standard English or German labels to provide warnings in other languages. One set of labels is supplied with the devices. One sign in each of the following languages is provided in each set: BG, CN, CZ, DE, DK, EE, ES, FI, FR, GB, GR, HU, IE, IS, IT, JP, KR, LT, LV, MT, NL, NO, PL, PT, RO, RU, SE, SI, SK, TR	**6SL3166-3AB00-0AA0**

[1] Connecting Braking Modules in the booksize format in parallel should be avoided, as it cannot be guaranteed that the power will be evenly divided between the modules.

© Siemens 2022

Overview

The excess energy of the DC link is dissipated via the braking resistor.

The corresponding braking resistor is connected to a Braking Module or Basic Line Module. Mounting the braking resistor outside the control cabinet or switchgear room allows the power losses to be dissipated, thereby allowing a corresponding reduction in the level of air conditioning required.

Selection and ordering data

Suitable for Braking Module Power P_{DB}/P_{max} kW	Booksize format	**Braking resistor** Article No.
DC link voltage 510 ... 720 V DC		
0.3/25	6SL3100-1AE31-0AB0	**6SN1113-1AA00-0DA0**
1.5/100	6SL3100-1AE31-0AB0	**6SL3100-1BE31-0AA0**

Suitable for Basic Line Module Power P_{DB}/P_{max} kW	Booksize format	**Braking resistor** Article No.
DC link voltage 510 ... 720 V DC		
5/20/30	6SL3130-1TE22-0AA0	**6SE7023-2ES87-2DC0**
12.5/40/75	6SL3130-1TE24-0AA0	**6SE7028-0ES87-2DC0**

Technical specifications

Article No.		6SN1113-1AA00-0DA0		6SL3100-1BE31-0AA0	
Product designation		Braking resistor for Braking Module in booksize and booksize compact format			
DC link voltage 510 ... 720 V DC					
Resistance	Ω	17		5.7	
Rated power P_{DB}	kW	0.3		1.5	
Peak power P_{max}	kW	25		100	
Load duration for peak output t_a	s	0.1	0.4	1	2
Cycle duration of braking duty cycle t	s	11.5	210	68	460
Degree of protection		IP54 Braking resistor with connected 1.5 mm² cable (shielded), 3 m (9.84 ft) long		IP20	
Dimensions					
• Width	mm (in)	80 (3.15)		193 (7.60)	
• Height	mm (in)	210 (8.27)		410 (16.11)	
• Depth	mm (in)	53 (2.09)		240 (9.45)	
Net weight	kg (lb)	3.4 (7.50)		5.6 (12.4)	
Certificate of suitability		cULus		–	

© Siemens 2022

Technical specifications (continued)

Article No.		6SE7023-2ES87-2DC0	6SE7028-0ES87-2DC0
Product designation		Braking resistor	
DC link voltage 510 ... 720 V DC			
Resistance	Ω	20	8
Rated power P_{DB}	kW	5	12.5
Peak power P_{max}	kW	30	75
Load duration for peak output t_a	s	15	15
Cycle duration of braking duty cycle t	s	90	90
Degree of protection		IP20	IP20
Power connection		M6 screw stud	M6 screw stud
PE connection		M6 screw stud	M6 screw stud
Thermostatic switch (NC contact)		Screw-type terminals	Screw-type terminals
• Switching capacity		250 V AC/max. 10 A 42 V/0.2 A DC	250 V AC/max. 10 A 42 V/0.2 A DC
• Conductor cross-section	mm^2	2.5	1.5
Dimensions			
• Width	mm (in)	450 (17.72)	745 (29.33)
• Height	mm (in)	305 (12.01)	305 (12.01)
• Depth	mm (in)	485 (19.09)	485 (19.09)
Net weight	kg (lb)	17 (37.5)	27 (59.5)
Certificate of suitability		UL, CSA	UL, CSA
Suitable for			
Basic Line Module in booksize format	Type	6SL3130-1TE22-0AA0	6SL3130-1TE24-0AA0
Braking Module in booksize compact format	Type	6SL3400-1AE31-0AA0	–

Characteristic curves

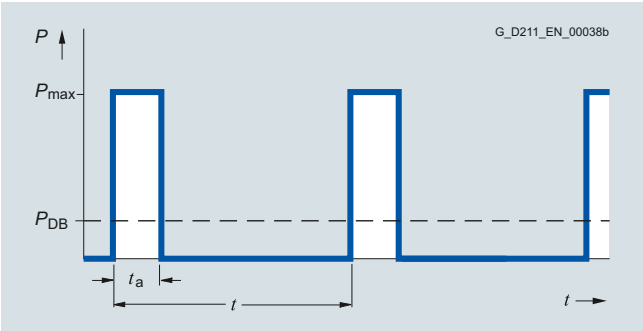

Load diagram for Braking Module in booksize format and braking resistors for booksize format

© Siemens 2022

Capacitor Module

Overview

Capacitor Module in booksize format

Capacitor Modules are used to increase the DC link capacitance to bridge momentary power losses.

Capacitor Modules are connected to the DC link voltage via the integrated DC link busbars. Capacitor Modules function autonomously.

Several Capacitor Modules can be operated in parallel.

Design

Capacitor Modules feature the following connections and interfaces as standard:

- 2 DC link connections via integrated DC link busbars
- 2 PE (protective earth) connections

Technical specifications

Article No.	6SL3100-1CE14-0AA0
Product designation	Capacitor Module Internal air cooling
DC link voltage 510 ... 720 V DC	
Capacitance	4000 µF
Current carrying capacity	
• 24 V DC busbars	20 A
• DC link busbars	100 A
PE connection	M5 screw
Dimensions	
• Width	100 mm (3.94 in)
• Height	380 mm (14.96 in)
• Depth, with spacer (included in scope of supply)	270 mm (10.63 in)
Net weight	7.2 kg (16 lb)
Certificate of suitability	cULus

Selection and ordering data

Description	Article No.
Capacitor Module	**6SL3100-1CE14-0AA0**
Accessories	
Warning labels in 30 languages This label set can be glued over the standard English or German labels to provide warnings in other languages. One set of labels is supplied with the devices. One sign in each of the following languages is provided in each set: BG, CN, CZ, DE, DK, EE, ES, FI, FR, GB, GR, HU, IE, IS, IT, JP, KR, LT, LV, MT, NL, NO, PL, PT, RO, RU, SE, SI, SK, TR	**6SL3166-3AB00-0AA0**

© Siemens 2022

Overview

Control Supply Module in booksize format

The Control Supply Module in booksize format provides a 24 V to 28.8 V DC power supply that can be set using an integrated poteniomenter via the line or DC link. The Control Supply Module can either be operated individually or in a parallel connection with a maximum of 10 devices. A DIP switch on the top of the module is used to change over in the de-energized state (details of connection for parallel operation are given in the manual for booksize modules).

Using the Control Supply Module, it is possible for example to make specific emergency retraction movements in the event of a power failure, provided that the DC link voltage is available.

Design

Control Supply Modules feature the following connections and interfaces as standard:

- 1 line connection
- 2 DC link connections via integrated DC link busbars
- 2 electronics power supply connections via integrated 24 V DC bars
- 1 connection for the electronics power supply for Control Units, Terminal Modules, Sensor Modules, etc., via the 24 V terminal adapter provided in the scope of supply (max. cross-section 6 mm^2, max. fuse protection 20 A)
- 1 integrated potentiometer for setting the output voltage
- 1 digital output to signal the error-free state
- 1 DIP switch to change over between single and parallel mode
- 2 PE (protective earth) connections

The status of the Control Supply Modules is indicated via two multi-color LEDs.

Technical specifications

Article No.	6SL3100-1DE22-0AA1
Product designation	Control Supply Module in booksize format Internal air cooling
DC link voltage 510 ... 720 V DC	
Line voltage 380 ... 480 V 3 AC	
Rated input current	
• At 400 V 3 AC	≤ 2 A
• At 600 V DC	1.1 A
DC link voltage range	300 … 882 V DC (operation in 300 … 430 V DC range is permitted temporarily for < 1 min)
Radio interference suppression (standard)	Category C2 to EN 61800-3
Rated output voltage	24 V ... 28.8 V DC (adjustable via potentiometer)
Rated output current	20 A
Current carrying capacity	
• 24 V DC busbars	20 A
• DC link busbars	100 A
Line connection L1, L2, L3 (X1)	Screw-type terminals
• Conductor cross-section	0.2 ... 4 mm^2
PE connection	M5 screw
Dimensions	
• Width	50 mm (1.97 in)
• Height	380 mm (14.96 in)
• Depth, with spacer (included in scope of supply)	270 mm (10.63 in)
Net weight	4.8 kg (10.6 lb)
Certificate of suitability	cULus

Selection and ordering data

Description	Article No.
Control Supply Module in booksize format	**6SL3100-1DE22-0AA1**
Accessories	
Warning labels in 30 languages This label set can be glued over the standard English or German labels to provide warnings in other languages. One set of labels is supplied with the devices. One sign in each of the following languages is provided in each set: BG, CN, CZ, DE, DK, EE, ES, FI, FR, GB, GR, HU, IE, IS, IT, JP, KR, LT, LV, MT, NL, NO, PL, PT, RO, RU, SE, SI, SK, TR	**6SL3166-3AB00-0AA0**

© Siemens 2022

Overview

DC link rectifier adapter

DC link rectifier adapter for unit widths of 50 mm (1.97 in) and 100 mm (3.94 in)

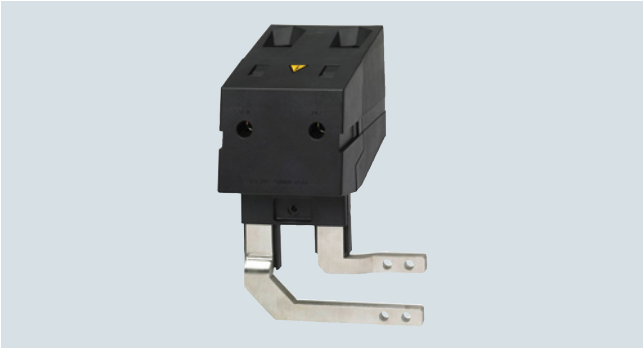

DC link rectifier adapter for unit widths of 150 mm ... 300 mm (5.91 in ... 11.81 in)

If the internal DC link busbars of the Motor Modules are not used, the DC link voltage must be supplied externally through a DC link rectifier adapter, e.g. when devices of booksize format are coupled with devices of chassis format over an external DC busbar. The DC link rectifier adapter is mounted on the DC link busbars of the Motor Module. The DC link cables are routed from above.

DC link adapter

DC link adapter (multi-tier) for all unit widths

If a multi-tier Motor Module configuration is used, a DC link adapter can be provided for linking the DC links of two drive lineups. The DC link adapter is mounted sideways on the DC link busbars of the Motor Module. Installation is possible on the right or left side of the Motor Module. The marking of the poles (DCN and DCP) at the DC link adapter matches the side chosen for installation. The DC link cables are routed from behind. The DC link adapter (multi-tier) cannot be used in combination with the reinforced DC link busbars for Motor Modules ≤ 100 mm wide. DC link adapters are supplied in sets of 2 units.

Selection and ordering data

Description	Article No.
DC link rectifier adapter	
For direct infeed of DC link voltage	
For Line Modules and Motor Modules in the booksize and booksize compact format with a width of	
• 50 mm (1.97 in) and 100 mm (3.94 in)	**6SL3162-2BD00-0AA0**
• 150 mm (5.91 in), 200 mm (7.87 in) and 300 mm (11.81 in)	**6SL3162-2BM00-0AA0**
DC link adapter set (2 units)	
For multi-tier configuration	
• For all Line Modules and Motor Modules in booksize and booksize compact format	**6SL3162-2BM01-0AA0**

Technical specifications

Article No.		6SL3162-2BD00-0AA0	6SL3162-2BM00-0AA0	6SL3162-2BM01-0AA0
Product designation		DC link rectifier adapter		DC link adapter set
Connection		Screw-type terminals	Screw-type terminals	Screw-type terminals
• Conductor cross-section	mm^2	0.5 ... 10	35 ... 95	35 ... 95
Current carrying capacity	A	43	200	200
Net weight	kg (lb)	0.06 (0.13)	0.48 (1.06)	0.76 (1.68)
Certificate of suitability		cURus	cURus	cURus
Suitable for Line Modules and Motor Modules	Formats	Booksize and booksize compact	Booksize and booksize compact	Booksize and booksize compact

© Siemens 2022

Overview

The self-commutated infeed/regenerative feedback units with IGBTs generate a regulated DC link voltage. This means that the connected Motor Modules are decoupled from the line voltage. Line voltage fluctuations within the permissible supply tolerances have no effect on the motor voltage.

If required, the Active Line Modules can also provide reactive power compensation.

Active Line Modules are designed for connection to grounded TN/TT and non-grounded IT supply systems.

Active Line Modules are always operated together with the associated Active Interface Modules. These include the necessary pre-charging circuit as well as a Clean Power Filter.

Design

The Active Line Modules have the following interfaces as standard:

- 1 line supply connection
- 1 connection for the 24 V DC electronics power supply
- 1 DC link connection (DCP, DCN) for supplying the connected Motor Modules
- 1 DC link connection (DCPA, DCNA) for connecting a Braking Module
- 3 DRIVE-CLiQ sockets
- 1 temperature sensor input for KTY84-130, Pt1000, PTC or Pt100 (Pt1000 can be used from firmware V4.7 HF17 and higher)
- 2 PE connections

The status of the Active Line Modules is indicated via three LEDs.

The scope of supply of the Active Line Modules includes:

- DRIVE-CLiQ cable to connect to a Control Unit
- DRIVE-CLiQ cable to connect the Control Unit to the first Motor Module
- 1 set of warning labels in 30 languages (BG, CN, CZ, DE, DK, EE, ES, FI, FR, GB, GR, HU, IE, IS, IT, JP, KR, LT, LV, MT, NL, NO, PL, PT, RO, RU, SE, SI, SK, TR)

Integration

The Active Line Modules communicate with the higher-level control module via DRIVE-CLiQ. This control module can be:

- A CU320-2 Control Unit
- A SINUMERIK 840D sl with NCU 710.3B PN/NCU 720.3B PN/NCU 730.3B PN
- A SINAMICS NX10.3/NX15.3

An external 24 V DC power supply is required to operate the Active Line Modules.

Selection and ordering data

Rated power at 400 V kW (hp)	Rated infeed/ regenerative feedback current A	**Active Line Module** Article No.
Line voltage 380 ... 480 V 3 AC		
132 (200)	210	**6SL3330-7TE32-1AA3**
160 (250)	260	**6SL3330-7TE32-6AA3**
235 (400)	380	**6SL3330-7TE33-8AA3**
300 (500)	490	**6SL3330-7TE35-0AA3**

Description	Article No.
Accessories for re-ordering	
Dust protection blanking plugs (50 units) For DRIVE-CLiQ port	**6SL3066-4CA00-0AA0**

Technical specifications

General technical specifications

Electrical specifications	
Line power factor	
• Basic fundamental (cos φ_1)	1 (factory setting), can be altered by inputting a reactive current setpoint
• Total (λ)	1 (factory setting)
Efficiency	>97.5 % (including Active Interface Module)
DC link voltage	The DC link voltage is regulated and can be adjusted as a voltage decoupled from the line voltage. Factory setting of the DC link voltage: 1.5 × line voltage
Radio interference suppression	
• Standard (Active Line Module with Active Interface Module)	Category C3 to EN 61800-3
• With line filter	Category C2 to EN 61800-3

© Siemens 2022

Technical specifications

Article No.		6SL3330-7TE32-1AA3	6SL3330-7TE32-6AA3	6SL3330-7TE33-8AA3	6SL3330-7TE35-0AA3
Product designation		Active Line Modules			
Line voltage 380 ... 480 V 3 AC					
Rated power					
• At $I_{rated\ DC}$ (50 Hz 400 V)	kW	**132**	**160**	**235**	**300**
• At $I_{H\ DC}$ (50 Hz 400 V)	kW	115	145	210	270
• At $I_{rated\ DC}$ (60 Hz 460 V)	hp	200	250	400	500
• At $I_{H\ DC}$ (60 Hz 460 V)	hp	150	200	300	400
DC link current					
• Rated current $I_{rated\ DC}$	A	235	291	425	549
• Base-load current $I_{H\ DC}$ [1]	A	209	259	378	489
• Maximum current $I_{max\ DC}$	A	352	436	637	823
Infeed/regenerative feed-back current					
• Rated current $I_{rated\ I}$	A	210	260	380	490
• Maximum current $I_{max\ I}$	A	315	390	570	735
Current demand					
• 24 V DC auxiliary power supply	A	1.1	1.1	1.35	1.35
• 400 V AC	A	0.63	1.13	1.8	1.8
DC link capacitance					
• Active Line Module	µF	4200	5200	7800	9600
• Drive line-up, max.	µF	41600	41600	76800	76800
Power loss, max. [2]					
• At 50 Hz 400 V	kW	2.2	2.7	3.9	4.8
• At 60 Hz 460 V	kW	2.3	2.9	4.2	5.1
Cooling air requirement	m^3/s (ft^3/s)	0.17 (6.00)	0.23 (8.12)	0.36 (12.7)	0.36 (12.7)
Sound pressure level L_{pA} [3] (1 m) at 50/60 Hz	dB	64/67	71/71	69/73	69/73
Line supply connection U1, V1, W1		Flat connector for M10 screw	Flat connector for M10 screw	Flat connector for M10 screw	Flat connector for M10 screw
• Conductor cross-section, max. (IEC)	mm^2	2 × 185	2 × 185	2 × 240	2 × 240
DC link connection DCP, DCN		M10 screw	M10 screw	M10 screw	M10 screw
• Conductor cross-section, max. (IEC)	mm^2	2 × 185	2 × 185	2 × 240	2 × 240
PE1/GND connection		M10 screw	M10 screw	M10 screw	M10 screw
• Conductor cross-section, max. (IEC)	mm^2	2 × 185	2 × 185	2 × 240	2 × 240
PE2/GND connection		M10 screw	M10 screw	M10 screw	M10 screw
• Conductor cross-section, max. (IEC)	mm^2	2 × 185	2 × 185	2 × 240	2 × 240
Cable length, max. [4]					
• Shielded	m (ft)	2700 (8858)	2700 (8858)	2700 (8858)	2700 (8858)
• Unshielded	m (ft)	4050 (13287)	4050 (13287)	4050 (13287)	4050 (13287)
Degree of protection		IP20	IP20	IP20	IP20
Dimensions					
• Width	mm (in)	326 (12.8)	326 (12.8)	326 (12.8)	326 (12.8)
• Height	mm (in)	1400 (55.1)	1400 (55.1)	1533 (60.4)	1533 (60.4)
• Depth	mm (in)	356 (14.0)	356 (14.0)	545 (21.5)	545 (21.5)
Net weight	kg (lb)	95 (209)	95 (209)	136 (300)	136 (300)
Frame size		FX	FX	GX	GX
Min. short-circuit current [5]	kA	6.2	10.5	10.5	8

[1] The base-load current $I_{H\ DC}$ is the basis for a duty cycle of 150 % for 60 s or $I_{max\ DC}$ for 5 s with a duty cycle duration of 300 s.

[2] The specified power loss represents the maximum value at 100 % utilization. The value is lower under normal operating conditions.

[3] Total sound pressure level of Active Interface Module and Active Line Module.

[4] Total of all motor cables and DC link. Longer cable lengths for specific configurations are available on request. For additional information, please refer to the SINAMICS Low Voltage Engineering Manual.

[5] Current required for reliably triggering protective devices.

© Siemens 2022

Overview

Active Interface Modules are used in conjunction with Active Line Modules. Active Interface Modules contain a Clean Power Filter with basic RI suppression, the pre-charging circuit for the Active Line Module, the line voltage sensing circuit and monitoring sensors. The bypass contactor is an integral component in frame sizes FI and GI, This ensures a highly compact design. The bypass contactor must be provided separately for frame sizes HI and JI.

Line harmonics are largely suppressed by the Clean Power Filter.

Design

Active Interface Modules have the following interfaces as standard:

- 1 line supply connection
- 1 load connection
- 1 connection for the 24 V DC electronics power supply
- 1 connection for the external 230 V AC supply (fan power supply)
- 1 DRIVE-CLiQ socket (on VSM10 Voltage Sensing Module)
- 1 connection for pre-charging circuit, frame sizes HI and JI
- 1 PE connection

The scope of supply of the Active Interface Modules includes:

- DRIVE-CLiQ cable for the connection between Active Interface Module and Active Line Module
- 1 set of warning labels in 30 languages (BG, CN, CZ, DE, DK, EE, ES, FI, FR, GB, GR, HU, IE, IS, IT, JP, KR, LT, LV, MT, NL, NO, PL, PT, RO, RU, SE, SI, SK, TR)

Selection and ordering data

Suitable for Active Line Module Rated power of the Active Line Module at 400 V kW (hp)	Chassis format, air-cooled	**Active Interface Module** Article No.
Line voltage 380 ... 480 V 3 AC		
132 (200)	6SL3330-7TE32-1AA3	**6SL3300-7TE32-6AA1**
160 (250)	6SL3330-7TE32-6AA3	**6SL3300-7TE32-6AA1**
235 (400)	6SL3330-7TE33-8AA3	**6SL3300-7TE33-8AA1**
300 (500)	6SL3330-7TE35-0AA3	**6SL3300-7TE35-0AA1**

5

© Siemens 2022

Technical specifications

Article No.		6SL3300-7TE32-6AA1		6SL3300-7TE33-8AA1	6SL3300-7TE35-0AA1
Product designation		Active Interface Modules			
Line voltage 380 ... 480 V 3 AC					
Suitable for Active Line Module					
• Rated power at 400 V	kW	**132**	**160**	**235**	**300**
- Air-cooled		6SL3330-7TE32-1AA3	6SL3330-7TE32-6AA3	6SL3330-7TE33-8AA3	6SL3330-7TE35-0AA3
- Liquid-cooled		–	–	–	6SL3335-7TE35-0AA3
Rated current	A	210	260	380	490
Bypass contactor		Included	Included	Included	Included
Current demand					
• 24 V DC auxiliary power supply	A	0.17	0.17	0.17	0.17
• 230 V 2 AC					
- Inrush current	A	1.25	1.25	2.5	2.5
- Holding current	A	0.6	0.6	1.2	1.2
DC link capacitance of drive line-up, max. [1]	µF	41600	41600	76800	76800
Power loss, max. [2]					
• At 50 Hz 400 V	kW	2.1	2.2	3.0	3.9
• At 60 Hz 460 V	kW	2.1	2.2	3.0	3.9
Cooling air requirement	m^3/s (ft^3/s)	0.24 (8.48)	0.24 (8.48)	0.47 (16.6)	0.47 (16.6)
Line/load connection L1, L2, L3 / U2, V2, W2		Flat connector for M10 screw	Flat connector for M10 screw	Flat connector for M10 screw	Flat connector for M10 screw
• Conductor cross-section, max. (IEC)	mm^2	2 × 185	2 × 185	2 × 185	2 × 185
PE/GND connection		2 × M10 nut	2 × M10 nut	2 × M10 nut	2 × M10 nut
• Conductor cross-section, max. (IEC)	mm^2	2 × 185	2 × 185	2 × 185	2 × 185
Degree of protection		IP20	IP20	IP20	IP20
Dimensions					
• Width	mm (in)	325 (12.8)	325 (12.8)	325 (12.8)	325 (12.8)
• Height	mm (in)	1400 (55.1)	1400 (55.1)	1533 (60.4)	1533 (60.4)
• Depth	mm (in)	355 (14.0)	355 (14.0)	544 (21.4)	544 (21.4)
Net weight	kg (lb)	135 (298)	135 (298)	190 (419)	190 (419)
Frame size		FI	FI	GI	GI
Minimum short-circuit current [3]	kA	6.2	10.5	10.5	8

[1] Information on higher capacities is included in the SINAMICS Low Voltage Engineering Manual.

[2] The specified power loss represents the maximum value at 100 % utilization. The value is lower under normal operating conditions.

[3] Current required for reliable triggering of the protective devices.

© Siemens 2022

Overview

Suitable line-side power components are assigned depending on the power rating of the Active Line Modules.

The tables below list recommended components.

Additional information about the recommended line-side components can be found in the Industry Mall.

Assignment of line-side power components to Active Line Modules in chassis format

Rated power	Input current	Assignment to Active Interface Module	Assignment to Active Line Module	Bypass connector
kW (hp)	A	6SL3300-...	6SL3330-...	
132 (200)	210	7TE32-6AA1	7TE32-1AA3	included in Active Interface Module
160 (225)	260	7TE32-6AA1	7TE32-6AA3	included in Active Interface Module
235 (350)	380	7TE33-8AA1	7TE33-8AA3	included in Active Interface Module
300 (450)	490	7TE35-0AA1	7TE35-0AA3	included in Active Interface Module

Rated power	Input current	Assignment to Active Interface Module	Switch disconnector without handle and shaft	Switch disconnector with handle and shaft	Cable protection fuse		Cable protection fuse incl. semiconductor protection	
kW (hp)	A	6SL3300-...	Article No.	Article No.	Rated current	Article No.	Rated current	Article No.
132 (200)	210	7TE32-6AA1	**3KL5530-1AB01**	**3KL5530-1GB01**	250 A	**3NA3144**	315 A	**3NE1230-2**
160 (225)	260	7TE32-6AA1	**3KL5730-1AB01**	**3KL5730-1GB01**	315 A	**3NA3252**	350 A	**3NE1331-2**
235 (350)	380	7TE33-8AA1	**3KL5730-1AB01**	**3KL5730-1GB01**	500 A	**3NA3365** *)	500 A	**3NE1334-2**
300 (450)	490	7TE35-0AA1	**3KL6130-1AB02**	**3KL6130-1GB02**	630 A	**3NA3372**	630 A	**3NE1436-2**

*) Fuse suitable only for 3KL6130...

© Siemens 2022

Overview

A Motor Module comprises a self-commutated converter with IGBTs. It generates a variable voltage with variable frequency from the DC link voltage that feeds the connected motor.

Multiple Motor Modules can be operated on a single DC link. This permits energy to be transferred between the Motor Modules. This means that if one Motor Module operating in generator mode produces energy, the energy can be used by another Motor Module operating in motor mode.

Motor Modules are controlled by a Control Unit.

Design

The Motor Modules in the chassis format have the following interfaces as standard:

- 1 motor connection
- 1 connection for the 24 V DC electronics power supply
- 1 DC link connection (DCP, DCN) for connecting to the supply DC link
- 1 DC link connection (DCPA, DCNA) for connecting a Braking Module
- 1 DC link connection (DCPS, DCNS) for connecting a dv/dt filter
- 3 DRIVE-CLiQ sockets
- 1 temperature sensor input for KTY84-130, Pt1000, PTC or Pt100 (Pt1000 can be used from firmware V4.7 HF17 and higher)
- 1 connection for Safe Brake Adapter
- 1 connection for Safety Integrated
- 2 PE connections

The status of the Motor Modules is indicated via three LEDs.

The scope of supply of the Motor Modules includes:

- DRIVE-CLiQ cable for connection to the Control Unit
- DRIVE-CLiQ cable for connection to the next Motor Module
- 1 set of warning labels in 30 languages (BG, CN, CZ, DE, DK, EE, ES, FI, FR, GB, GR, HU, IE, IS, IT, JP, KR, LT, LV, MT, NL, NO, PL, PT, RO, RU, SE, SI, SK, TR)

Integration

The Motor Modules communicate with the higher-level control module via DRIVE-CLiQ. This control module can be:

- A CU320-2 Control Unit
- A SINUMERIK 840D sl with NCU 710.3B PN/NCU 720.3B PN/NCU 730.3B PN
- A SINAMICS NX10.3/NX15.3

Selection and ordering data

Type rating at 400 V kW (hp)	Rated output current A	**Motor Module** Article No.
Line voltage 380 ... 480 V 3 AC (DC link voltage 510 ... 720 V DC)		
110 (150)	210	**6SL3320-1TE32-1AA3**
132 (200)	260	**6SL3320-1TE32-6AA3**
160 (250)	310	**6SL3320-1TE33-1AA3**
200 (300)	380	**6SL3320-1TE33-8AA3**
250 (400)	490	**6SL3320-1TE35-0AA3**

Description	Article No.
Accessories for re-ordering	
Dust protection blanking plugs (50 units) For DRIVE-CLiQ port	**6SL3066-4CA00-0AA0**

Technical specifications

General technical specifications

Electrical specifications	
Efficiency	>98.5 %
DC link voltage	510 ... 720 V DC (line voltage 380 ... 480 V 3 AC) or 675 ... 1035 V DC (line voltage 500 ... 690 V 3 AC)
Output frequency [1]	
• Control type Servo	0 ... 550 Hz
• Control type Vector	0 ... 550 Hz
• Control mode V/f	0 ... 550 Hz
Safety Integrated	Safety Integrity Level 2 (SIL2) acc. to IEC 61508, Performance Level d (PLd) acc. to EN ISO 13849-1 and Control Category 3 acc. to EN ISO 13849-1

[1] Please note:
- The correlation between the maximum output frequency, pulse frequency and current derating. Higher output frequencies on request. For further information, see https://support.industry.siemens.com/cs/document/104020669
- The correlation between the minimum output frequency and permissible output current (current derating). Information is provided in the SINAMICS Low Voltage Engineering Manual.

© Siemens 2022

Technical specifications (continued)

Article No.		6SL3320-1TE32-1AA3	6SL3320-1TE32-6AA3	6SL3320-1TE33-1AA3	6SL3320-1TE33-8AA3	6SL3320-1TE35-0AA3
Product designation		Motor Modules				
Line voltage 380 ... 480 V 3 AC						
DC link voltage 510 ... 720 V DC						
Type rating						
• At I_L (50 Hz 400 V) [1]	kW	**110**	**132**	**160**	**200**	**250**
• At I_H (50 Hz 400 V) [1]	kW	90	110	132	160	200
• At I_L (60 Hz 460 V) [2]	hp	150	200	250	300	400
• At I_H (60 Hz 460 V) [2]	hp	150	200	200	250	350
Output current						
• Rated current $I_{rated\ O}$	A	210	260	310	380	490
• Base-load current I_L [3]	A	205	250	302	370	477
• Base-load current I_H [4]	A	178	233	277	340	438
• Maximum current $I_{max\ O}$	A	307	375	453	555	715
DC link current						
• Rated current $I_{rated\ DC}$ when supplied via						
- Basic/Smart Line Module	A	252	312	372	456	588
- Active Line Module	A	227	281	335	411	529
• Base-load current $I_{L\ DC}$ [3] when supplied via						
- Basic/Smart Line Module	A	245	304	362	444	573
- Active Line Module	A	221	273	326	400	515
• Base-load current $I_{H\ DC}$ [4] when supplied via						
- Basic/Smart Line Module	A	224	277	331	405	523
- Active Line Module	A	202	250	298	365	470
Current demand						
• 24 V DC auxiliary power supply	A	0.8	0.8	0.9	0.9	0.9
• 400 V AC	A	0.63	1.13	1.8	1.8	1.8
DC link capacitance	µF	4200	5200	6300	7800	9600
Pulse frequency [5]						
• Rated frequency	kHz	2	2	2	2	2
• Pulse frequency, max.						
- Without current derating	kHz	2	2	2	2	2
- With current derating	kHz	8	8	8	8	8
Power loss, max. [6]						
• At 50 Hz 400 V	kW	1.86	2.5	2.96	3.67	4.28
• At 60 Hz 460 V	kW	1.94	2.6	3.1	3.8	4.5
Cooling air requirement	m^3/s (ft^3/s)	0.17 (6.00)	0.23 (8.12)	0.36 (12.7)	0.36 (12.7)	0.36 (12.7)
Sound pressure level L_{pA} (1 m) at 50/60 Hz	dB	64/67	71/71	69/73	69/73	69/73
DC link connection DCP, DCN		M10 screw	M10 screw	M10 screw	M10 screw	M10 screw
• Conductor cross-section, max. (IEC)	mm^2	2 × 185	2 × 185	2 × 240	2 × 240	2 × 240
Connection for Braking Module DCPA, DCNA [7]		M6 threaded bolt	M6 threaded bolt	M6 threaded bolt	M6 threaded bolt	M6 threaded bolt
Connection for dv/dt filter DCPS, DCNS		M8 screw	M8 screw	M8 screw	M8 screw	M8 screw
• Conductor cross-section, max. (IEC)	mm^2	1 × 35	1 × 35	1 × 70	1 × 70	1 × 70

Footnotes see page 5/86.

© Siemens 2022

Technical specifications (continued)

Article No.		6SL3320-1TE32-1AA3	6SL3320-1TE32-6AA3	6SL3320-1TE33-1AA3	6SL3320-1TE33-8AA3	6SL3320-1TE35-0AA3
Product designation		Motor Modules				
Motor connection U2, V2, W2		M10 screw	M10 screw	M10 screw	M10 screw	M10 screw
• Conductor cross-section, max. (IEC)	mm^2	2 × 185	2 × 185	2 × 240	2 × 240	2 × 240
Cable length, max. [8]						
• Shielded	m (ft)	300 (984)	300 (984)	300 (984)	300 (984)	300 (984)
• Unshielded	m (ft)	450 (1476)	450 (1476)	450 (1476)	450 (1476)	450 (1476)
PE1/GND connection		M10 screw	M10 screw	M10 screw	M10 screw	M10 screw
• Conductor cross-section, max. (IEC)	mm^2	2 × 185	2 × 185	2 × 240	2 × 240	2 × 240
PE2/GND connection		M10 screw	M10 screw	M10 screw	M10 screw	M10 screw
• Conductor cross-section, max. (IEC)	mm^2	2 × 185	2 × 185	2 × 240	2 × 240	2 × 240
Degree of protection		IP20	IP20	IP20	IP20	IP20
Dimensions						
• Width	mm (in)	326 (12.8)	326 (12.8)	326 (12.8)	326 (12.8)	326 (12.8)
• Height	mm (in)	1400 (55.1)	1400 (55.1)	1533 (60.4)	1533 (60.4)	1533 (60.4)
• Depth	mm (in)	356 (14.0)	356 (14.0)	545 (21.5)	545 (21.5)	545 (21.5)
Net weight	kg (lb)	95 (209)	95 (209)	136 (300)	136 (300)	136 (300)
Frame size		FX	FX	GX	GX	GX

1) Rated output of a typical 6-pole standard induction motor based on I_L or I_H for 400 V 3 AC 50 Hz.

2) Rated output of a typical 6-pole standard induction motor based on I_L or I_H for 460 V 3 AC 60 Hz.

3) The base-load current I_L is based on a duty cycle of 110 % for 60 s or 150 % for 10 s with a duty cycle duration of 300 s.

4) The base-load current I_H is based on a duty cycle of 150 % for 60 s or 160 % for 10 s with a duty cycle duration of 300 s.

5) Information regarding the correlation between the pulse frequency and maximum output current/output frequency is provided in the SINAMICS Low Voltage Engineering Manual.

6) The specified power loss represents the maximum value at 100 % utilization. The value is lower under normal operating conditions.

7) The connecting cables are included in the scope of supply of the Braking Module.

8) Total of all motor cables and DC link. Longer cable lengths for specific configurations are available on request. For additional information, please refer to the SINAMICS Low Voltage Engineering Manual.

© Siemens 2022

Overview

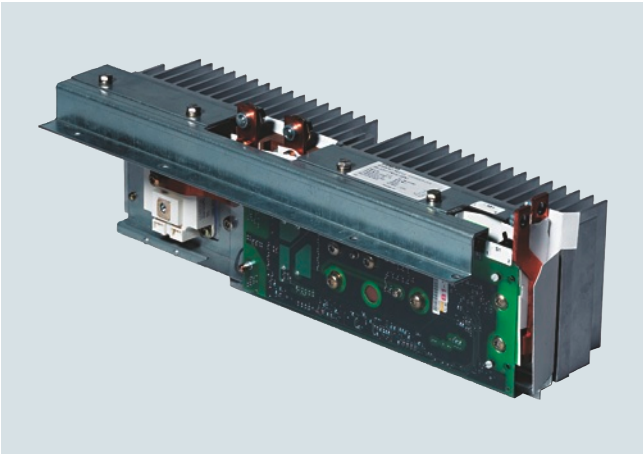

A Braking Module and the matching external braking resistor are required to bring drives to a controlled standstill in the event of a power failure (e.g. with an EMERGENCY STOP) or to limit the DC link voltage for brief periods of regenerative operation, e.g. if the Line Module is not capable of energy recovery.

The Braking Module includes the power electronics and the associated control circuit. During operation, the DC link energy is converted to heat loss in an external braking resistor.

The Braking Module works independently of the converter control.

Several Braking Modules can be operated in parallel, but a separate braking resistor must be connected to each Braking Module.

Braking Modules are designed to be integrated into air-cooled Motor Modules, Line Modules or Power Modules and are cooled by the fans on these modules. The supply voltage for the electronics is taken from the DC link. The Braking Modules are connected to the DC link by means of the busbar sets included in the scope of supply or flexible cables and, in the case of Basic Line Modules of frame size GB or GD, using a separate cable harness set.

The activation threshold of the Braking Module can be adjusted by means of a DIP switch. The braking power values specified in the technical specifications apply to the upper activation threshold.

Note:
The Braking Modules are not intended for installation in a Line Module or Motor Module in chassis-2 format.

Design

The Braking Modules have the following interfaces as standard:

- 1 DC link connection
- 1 braking resistor connection
- 1 digital input (inhibit Braking Module / acknowledge error)
- 1 digital output (Braking Module inhibited)
- 1 DIP switch for adjusting the activation threshold

Information about Braking Module activation thresholds and other notes are included in the SINAMICS Low Voltage Engineering Manual.

Selection and ordering data

Rated power P_{DB} kW	Peak power P_{15} kW	Frame size	**Braking Module** Article No.
Line voltage 380 ... 480 V 3 AC DC link voltage 510 ... 720 V DC			
25	125	FX	**6SL3300-1AE31-3AA0**
50	250	GX	**6SL3300-1AE32-5AA0**

Description	Article No.
Accessories	
Cable harness set for mounting a Braking Module of frame size GX into a Basic Line Module of frame size GB or GD	**6SL3366-2NG00-0AA0**

Characteristic curves

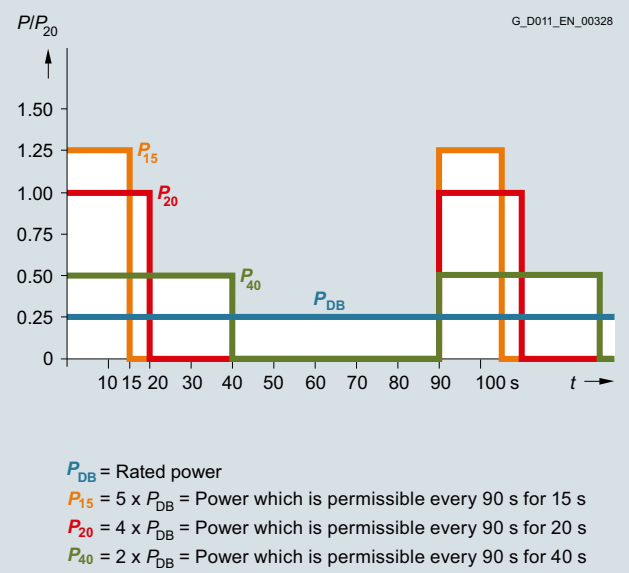

Load diagram for Braking Modules and braking resistor

© Siemens 2022

Technical specifications

Article No.		6SL3300-1AE31-3AA0	6SL3300-1AE32-5AA0
Product designation		Braking Module	
Line voltage 380 ... 480 V 3 AC **DC link voltage 510 ... 720 V DC**			
Power			
• Rated power P_{DB}	kW	25	50
• Peak power P_{15}	kW	125	250
• Power P_{20}	kW	100	200
• Power P_{40}	kW	50	100
Activation thresholds (adjustable via DIP switch)	V	774 (factory setting) or 673	774 (factory setting) or 673
Digital inputs in accordance with IEC 61131-2 Type 1			
• Voltage	V	24 DC	24 DC
• Low level (an open digital input is interpreted as "low")	V	-3 ... +5	-3 ... +5
• High level	V	15 ... 30	15 ... 30
• Current consumption at 24 V DC, typ.	mA	10	10
• Conductor cross-section, max.	mm^2	1.5	1.5
Digital outputs (continuously short-circuit proof)			
• Voltage	V	24 DC	24 DC
• Load current per digital output, max.	mA	500	500
• Conductor cross-section, max.	mm^2	1.5	1.5
R1/R2 connection		M8 nut	M8 nut
• Conductor cross-section, max.	mm^2	35	50
Net weight	kg (lb)	3.6 (7.94)	7.3 (16.1)
Suitable for installation in air-cooled Power Modules, Line Modules or Motor Modules			
• Air-cooled	Frame size	FX	GX

© Siemens 2022

Overview

Excess energy in the DC link is dissipated via the braking resistor.

The braking resistor is connected to a Braking Module.

By positioning the braking resistor outside the cabinet or switchgear room, it is possible to extract the heat losses away from the Line Modules / Motor Modules. This reduces the level of air conditioning required.

The maximum permissible cable length between the Braking Module and braking resistor is 100 m.

Two braking resistors with different rated and peak power values are available for the devices.

The braking resistor is monitored on the basis of the duty cycle. A temperature switch (NC contact) is also fitted. This responds when the maximum permissible temperature is exceeded and can be evaluated by a controller.

Information about possible load cycles of the braking resistors and other notes are included in the SINAMICS Low Voltage Engineering Manual.

Selection and ordering data

Rated power P_{DB} kW	Suitable for Braking Module Chassis format	**Braking resistor** Article No.
Line voltage 380 ... 480 V 3 AC DC link voltage 510 ... 720 V DC		
25	6SL3300-1AE31-3AA0	**6SL3000-1BE31-3AA0**
50	6SL3300-1AE32-5 . A0	**6SL3000-1BE32-5AA0**

Characteristic curves

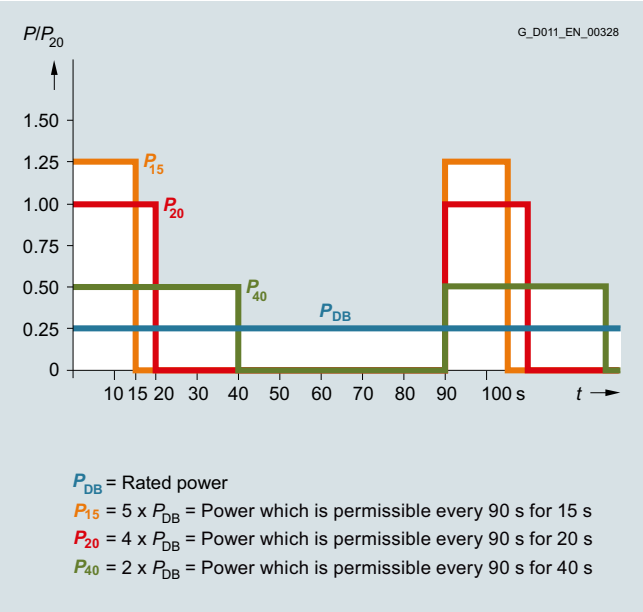

Load diagram for Braking Modules and braking resistors

© Siemens 2022

Technical specifications

Article No.		6SL3000-1BE31-3AA0	6SL3000-1BE32-5AA0
Product designation		Braking resistor	
Line voltage 380 ... 480 V 3 AC **DC link voltage 510 ... 720 V DC**			
Resistance	Ω	4.4 (±7.5 %)	2.2 (±7.5 %)
Rated power P_{DB} (continuous braking power)	kW	25	50
Power P_{15}	kW	125	250
Power P_{20}	kW	100	200
Power P_{40}	kW	50	100
Current, max.	A	189	378
Power connection		M10 stud	M10 stud
• Conductor cross-section, max. (IEC)	mm^2	50	70
Degree of protection		IP20	IP20
Dimensions			
• Width	mm (in)	740 (29.1)	810 (31.9)
• Height	mm (in)	605 (23.8)	1325 (52.2)
• Depth	mm (in)	486 (19.1)	486 (19.1)
Net weight	kg (lb)	50 (110)	120 (265)
Suitable for Braking Module	Type	6SL3300-1AE31-3AA0	6SL3300-1AE32-5 . A0

© Siemens 2022

Design

PM240-2 Power Modules, frame sizes FSA to FSF (with Control Unit and Operator Panel)

The PM240-2 Power Modules in blocksize format feature the following connections and interfaces as standard:

- Line supply connection
- PM-IF interface for connection of the PM240-2 Power Module and CU310-2/SIMOTION D410-2 Control Unit or CUA31/CUA32 Control Unit Adapter. The PM240-2 Power Module also supplies power to the CU310-2/SIMOTION D410-2 Control Unit or CUA31/CUA32 Control Unit Adapter by means of an integrated power supply
- Terminals DCP/R1 and R2 for connection of an external braking resistor
- Motor connection using screw terminals or screw studs
- Control circuit for the Safe Brake Relay for controlling a holding brake
- 2 PE/protective conductor connections

Power Modules without integrated line filter can be connected to grounded TN/TT systems and non-grounded IT systems. Power Modules with integrated line filter are suitable only for connection to TN systems with grounded neutral.

Additional options

Further selected accessories are available from "Siemens Product Partner for Drives Options": www.siemens.com/drives-options-partner

© Siemens 2022

Integration

PM240-2 Power Modules in blocksize format communicate via the PM-IF interface with

- the CU310-2 Control Unit
- CUA31 Control Unit Adapter

With a CUA31 Control Unit Adapter snapped on, the PM240-2 Power Module communicates via a DRIVE-CLiQ connection with

- a CU320-2 Control Unit
- a SINUMERIK 840D sl with NCU 710.3B PN/NCU 720.3B PN/NCU 730.3B PN

Power and DC link components that are optionally available depending on the Power Module used

The following line-side power components, DC link components and load-side power components are optionally available in the appropriate frames sizes for the Power Modules:

	Frame size					
	FSA	**FSB**	**FSC**	**FSD**	**FSE**	**FSF**
PM240-2 Power Module with integrated braking chopper						
Available frame sizes						
• 200 V versions	✓	✓	✓	✓ [1]	✓ [1]	✓ [1]
• 400 V versions	✓	✓	✓	✓	✓	✓
• 690 V versions	–	–	–	✓	✓	✓
Line-side power components						
Line filter class A	F	F	F	F [1]	F [1]	F [1]
Line filter class B (only for 400 V versions)	U	U	U	–	–	–
Line reactors (only for 3 AC versions)	S	S	S	I	I	I
DC link components						
Braking resistor	S	S	S	S	S	S
Load-side power components						
Output reactor	S	S	S	S	S	S
Sine-wave filter	–	–	–	–	–	–

U = Base component
S = Lateral mounting
I = Integrated
F = Power Modules available with and without integrated filter class A
– = Not possible

General design information

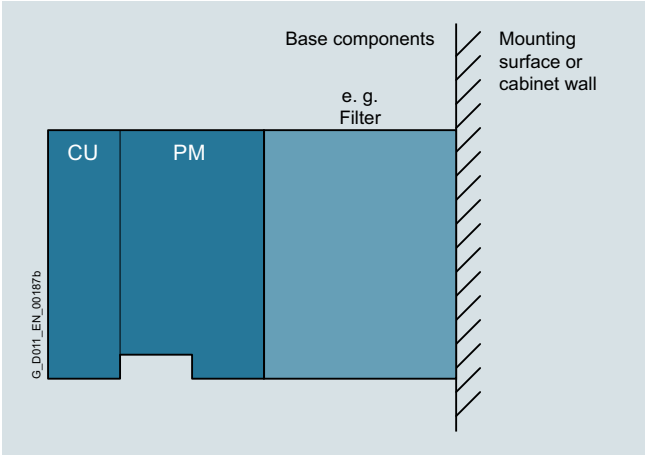

Converter comprising a Power Module (PM), a Control Unit (CU), and base components (side view)

- If at all possible, the line filter should be mounted directly below the converter.
- With lateral mounting, the line-side components have to be mounted on the left side of the converter, and the load-side components on the right side.
- Braking resistors have to be mounted directly on the control cabinet wall due to heating issues.

Recommended installation combinations of the converter and optional power and DC link components

Power Module	Base	Lateral mounting	
Frame size		Left of the converter (for line-side power components)	Right of the converter (for load-side power components and DC link components)
FSA to FSC	Line filter	Line reactor	Output reactor and/or braking resistor
FSD to FSF	–	Line filter	Output reactor and/or braking resistor

[1] PM240-2 200 V versions, frame sizes FSD to FSF are only available without integrated line filter.

© Siemens 2022

Technical specifications

General technical specifications

Unless explicitly specified otherwise, the following technical specifications are valid for all PM240-2 Power Modules in the blocksize format, FSA to FSF.

Note:

When engineering the complete SINAMICS S120 drive, the system data of the associated Control Units, supplementary system components, DC link components and Sensor Modules must be taken into consideration.

Electrical specifications	
Line voltage	
• Blocksize format FSA ... FSC	200 to 240 V 1 AC ±10% 200 to 240 V 3 AC ±10% 380 to 480 V 3 AC ±10%
• Blocksize format FSD to FSF	200 … 240 V 3 AC ±10 % (in operation -20 % <1 min) 380 ... 480 V 3 AC ±10 % (in operation -20 % <1 min) 500 … 690 V 3 AC ±10 % (in operation -20 % <1 min)
Line system configurations	Grounded TN/TT systems and non-grounded IT systems
Line frequency	47 ... 63 Hz
Line power factor for a 3 AC line supply voltage and output power	
• Blocksize format FSA ... FSC	
- Fundamental power factor (cos φ_1)	>0.96
- Total (λ)	> 0.7 - 0.85
• Blocksize format FSD to FSF	
- Fundamental power factor (cos φ_1)	> 0.98 - 0.99
- Total (λ)	> 0.9 - 0.92
Electromagnetic compatibility	
• Interference immunity	All PM240-2 Power Modules are suitable for use in both the first and second environments.
• Interference emission acc. to EN 61800-3 **second environment**	
- For devices with integrated radio suppression interference filter	Category C2
- For devices with integrated radio suppression interference filter, format FSF with a line supply voltage of 690 V	Category C3
- For devices without integrated radio interference suppression filter with optional external radio interference filter for grounded line supplies	Category C2 (recommended for operation in conjunction with a residual current protective device RCD)
- For devices without integrated radio interference suppression filter for operation on IT line supplies	Category C4
• Interference emission acc. to EN 61800-3 **first environment**	Can be used in the first environment when taking into consideration the additional secondary conditions listed in Section EMC notes
Overvoltage category acc. to IEC/EN 61800-5-1	III
Electronics power supply implemented as PELV circuit according to IEC/EN 61800-5-1	24 V DC, -15 % +20 % Ground = negative pole grounded via the electronics
Short-circuit current rating (SCCR) (Short Circuit Current Rating) Applies to industrial control cabinet installations according to NEC Article 409 or UL 508A.	100 kA See Recommended line-side overcurrent protection devices – the value depends on the fuses and circuit breakers used
Rated pulse frequency	
• For devices with a rated voltage of 200 V 1/3 AC, 400 V 3 AC and a type rating ≤ 90 kW based on I_{rated}	4 kHz
• For devices with a rated voltage of 690 V 3 AC and a type rating ≥ 110 kW based on I_{rated}	2 kHz
Output voltage, max.	Approximately 0.95 × line voltage (at 200 V 1 AC, approximately 0.74 × line voltage)
Output frequency	0 ... 550 Hz (dependencies on the control mode and pulse frequency must be taken into account)

© Siemens 2022

Technical specifications (continued)

Mechanical specifications			
Degree of protection acc. to EN 60529	IP20		
Protection class			
• Line circuits with protective conductor connection according to IEC/EN 61800-5-1	I		
• Electronic circuits	Safety extra low-voltage PELV/SELV		
Type of cooling			
• Internal air cooling	Forced air cooling AF to EN 60146		
• External air cooling	Push-through cooling for push-through device versions		
Ambient conditions			
	Storage In the product packaging	**Transport** In transport packaging	**Operation**
Ambient temperature	Class 1K4 acc. to EN 60721-3-1: 1997 -25 ... +55 °C (-13 ... +131 °F)	Class 2K4 acc. to EN 60721-3-2: 1997 -40 ... +70 °C (-40 ... +158 °F)	Class 3K3 [1] acc. to EN 60721-3-3: 2002 For operation without derating[2]: -10 ... +40 °C (14 ... 104 °F) (for operation with low overload) -10 ... +50 °C (14 ... 122 °F) (for operation with high overload) For operation with derating: >40 ... +60 °C (>104 ... 140 °F)
Relative humidity (Oil mist, salt mist, ice formation, condensation, dripping water, spraying water, splashing water and water jets not permitted)	Class 1K4 acc. to EN 60721-3-1: 1997 5 ... 95 %	Class 2K3 acc. to EN 60721-3-2: 1997 5 ... 95 % at 40 °C (104 °F)	Class 3K3 [1] acc. to EN 60721-3-3: 2002 5 ... 95 %
Environmental class/harmful chemical substances	Class 1C2 acc. to EN 60721-3-1: 1997	Class 2C2 acc. to EN 60721-3-2: 1997	Class 3C2 acc. to EN 60721-3-3: 2002
Organic/biological influences	Class 1B1 acc. to EN 60721-3-1: 1997	Class 2B1 acc. to EN 60721-3-2: 1997	Class 3B1 acc. to EN 60721-3-3: 2002
Degree of pollution acc. to IEC/EN 61800-5-1 (condensation not permissible)	2		
Installation altitude			
• For operation with low overload	Up to 1000 m (3281 ft) above sea level without derating		
• For operation with high overload	Up to 2000 m (6562 ft) above sea level without derating		
• From 2000 m (6256 ft) up to 4000 m (13124 ft) above sea level observe the derating characteristics	See characteristic for current derating as a function of the installation altitude and/or reduction of the ambient temperature by 3.5 K per 500 m (1640 ft)		
Mechanical strength			
	Storage In the product packaging	**Transport** In transport packaging	**Operation**
Vibratory load	Class 1M2 acc. to EN 60721-3-1: 1997	Class 2M3 acc. to EN 60721-3-2: 1997	Class 3M1 acc. to EN 60721-3-3: 2002 Test values acc. to EN 60068-2-6
Shock load	Class 1M2 acc. to EN 60721-3-1: 1997	Class 2M3 acc. to EN 60721-3-2: 1997	Class 3M1 acc. to EN 60721-3-3: 2002 Test values acc. to EN 60068-2-27
Certificates			
Declarations of conformity	CE (Low Voltage, EMC and Machinery Directives)		
Certificates of suitability			
• Blocksize format FSA ... FSC	cULus according to UL 61800-5-1; CSA only with external surge voltage protection device; RCM; SEMI F47		
• Blocksize format FSD ... FSF	cULus acc. to UL 61800-5-1; CSA only with external surge voltage protection device; RCM; SEMI F47 KCC only with internal or external line filters, Category C2; RoHS; EAC WEEE (Waste Electrical & Electronic Equipment)		

[1] Better than 3K3 through increased ruggedness regarding the temperature range and humidity.

[2] Also carefully observe the permissible temperatures for the Control Unit and where relevant, the operator panel.

© Siemens 2022

Technical specifications (continued)

PM240-2 Power Modules standard variant

Article No.		6SL3210-1PB13-0UL0	6SL3210-1PB13-8UL0	6SL3210-1PB15-5UL0	6SL3210-1PB17-4UL0	6SL3210-1PB21-0UL0
Product designation		PM240-2 Power Modules standard variant without integrated line filter				
Article No.		6SL3210-1PB13-0AL0	6SL3210-1PB13-8AL0	6SL3210-1PB15-5AL0	6SL3210-1PB17-4AL0	6SL3210-1PB21-0AL0
Product designation		PM240-2 Power Modules standard variant with integrated line filter class A				
Line voltage 200 ... 240 V 1 AC/3 AC						
Output current at 50 Hz 230 V 1 AC						
• Rated current I_{rated} [1]	A	3.2	4.2	6	7.4	10.4
• For S6 duty (40 %) I_{S6}	A	3.3	4.3	6.1	8.2	11.5
• Base-load current I_H [2]	A	2.3	3.2	4.2	6	7.4
• Maximum current I_{max}	A	4.6	6	8.3	11.1	15.6
Type rating						
• Based on I_{rated}	kW (hp)	0.55 (0.75)	0.75 (1)	1.1 (1.5)	1.5 (2)	2.2 (3)
• Based on I_H	kW (hp)	0.37 (0.5)	0.55 (0.75)	0.75 (1)	1.1 (1.5)	1.5 (2)
Rated pulse frequency	kHz	4	4	4	4	4
Efficiency η	%	>96	>96	>96	>96	>96
Power loss [3] at rated current	kW	0.04	0.04	0.05	0.07	0.12
Cooling air requirement	m^3/s (ft^3/s)	0.005 (0.18)	0.005 (0.18)	0.0092 (0.325)	0.0092 (0.325)	0.0092 (0.325)
Sound pressure level L_{pA} (1 m)	dB	<50	<50	<62	<62	<62
Input current [4]						
• Rated current 1 AC/3 AC	A	7.5/4.3	9.6/5.5	13.5/7.8	18.1/10.5	24/13.9
• Based on I_H 1 AC/3 AC	A	6.6/3.8	8.4/4.8	11.8/6.8	15.8/9.1	20.9/12.1
Line supply connection U1/L1, V1/L2, W1/L3		Terminal connector	Terminal connector	Terminal connector	Terminal connector	Terminal connector
• Conductor cross-section	mm^2	1.5 ... 2.5	1.5 ... 2.5	1.5 ... 6	1.5 ... 6	1.5 ... 6
Motor connection U2, V2, W2		Terminal connector	Terminal connector	Terminal connector	Terminal connector	Terminal connector
• Conductor cross-section	mm^2	1.5 ... 2.5	1.5 ... 2.5	1.5 ... 6	1.5 ... 6	1.5 ... 6
PE connection		Included in terminal connector	Included in terminal connector	Included in terminal connector	Included in terminal connector	Included in terminal connector
Motor cable length, max.						
• Shielded	m (ft)	50 (164)	50 (164)	50 (164)	50 (164)	50 (164)
• Unshielded	m (ft)	100 (328)	100 (328)	100 (328)	100 (328)	100 (328)
Degree of protection		IP20	IP20	IP20	IP20	IP20
Dimensions						
• Width	mm (in)	73 (2.87)	73 (2.87)	100 (3.94)	100 (3.94)	100 (3.94)
• Height	mm (in)	196 (7.72)	196 (7.72)	292 (11.50)	292 (11.50)	292 (11.50)
• Depth without operator panel	mm (in)	165 (6.50)	165 (6.50)	165 (6.50)	165 (6.50)	165 (6.50)
Frame size		FSA	FSA	FSB	FSB	FSB
Net weight						
• Without integrated line filter	kg (lb)	1.4 (3.09)	1.4 (3.09)	2.9 (6.39)	2.9 (6.39)	2.9 (6.39)
• With integrated line filter	kg (lb)	1.6 (3.53)	1.6 (3.53)	3.1 (6.84)	3.1 (6.84)	3.1 (6.84)

[1] The rated output current I_{rated} is based on the duty cycle for low overload (LO).

[2] The base-load current I_H is based on the duty cycle for high overload (HO).

[3] Typical values. More information can be found on the Internet at https://support.industry.siemens.com/cs/document/94059311

[4] The input current depends on the motor load and line impedance. The input currents apply for a load with the type rating (based on I_{rated}) for a line impedance corresponding to u_k = 1%. The current values are specified on the rating plate of the Power Module.

© Siemens 2022

Technical specifications (continued)

Article No.		6SL3210-1PB21-4UL0	6SL3210-1PB21-8UL0
Product designation		PM240-2 Power Modules standard variant without integrated line filter	
Article No.		6SL3210-1PB21-4AL0	6SL3210-1PB21-8AL0
Product designation		PM240-2 Power Modules standard variant with integrated line filter class A	
Line voltage 200 ... 240 V 1 AC/3 AC			
Output current at 50 Hz 230 V 1 AC			
• Rated current I_{rated} [1]	A	13.6	17.5
• For S6 duty (40 %) I_{S6}	A	15	19.3
• Base-load current I_H [2]	A	10.4	13.6
• Maximum current I_{max}	A	20.8	27.2
Type rating			
• Based on I_{rated}	kW (hp)	3 (4)	4 (5)
• Based on I_H	kW (hp)	2.2 (3)	3 (4)
Rated pulse frequency	kHz	4	4
Efficiency η	%	>96	>96
Power loss [3] at rated current	kW	0.14	0.18
Cooling air requirement	m^3/s (ft^3/s)	0.0185 (0.65)	0.0185 (0.65)
Sound pressure level L_{pA} (1 m)	dB	<65	<65
Input current [4]			
• Rated current 1 AC/3 AC	A	35.9/20.7	43/24.8
• Based on I_H 1 AC/3 AC	A	31.3/18.1	37.5/21.7
Line supply connection U1/L1, V1/L2, W1/L3		Terminal connector	Terminal connector
• Conductor cross-section	mm^2	6 ... 16	6 ... 16
Motor connection U2, V2, W2		Terminal connector	Terminal connector
• Conductor cross-section	mm^2	6 ... 16	6 ... 16
PE connection		Included in terminal connector	Included in terminal connector
Motor cable length, max.			
• Shielded	m (ft)	50 (164)	50 (164)
• Unshielded	m (ft)	100 (328)	100 (328)
Degree of protection		IP20	IP20
Dimensions			
• Width	mm (in)	140 (5.51)	140 (5.51)
• Height	mm (in)	355 (13.98)	355 (13.98)
• Depth without operator panel	mm (in)	165 (6.50)	165 (6.50)
Frame size		FSC	FSC
Net weight			
• Without integrated line filter	kg (lb)	5 (11)	5 (11)
• With integrated line filter	kg (lb)	5.2 (11.5)	5.2 (11.5)

[1] The rated output current I_{rated} is based on the duty cycle for low overload (LO).

[2] The base-load current I_H is based on the duty cycle for high overload (HO).

[3] Typical values. More information can be found on the Internet at https://support.industry.siemens.com/cs/document/94059311

[4] The input current depends on the motor load and line impedance. The input currents apply for a load with the type rating (based on I_{rated}) for a line impedance corresponding to u_k = 1%. The current values are specified on the rating plate of the Power Module.

© Siemens 2022

Technical specifications (continued)

Article No.		6SL3210-1PC22-2UL0	6SL3210-1PC22-8UL0	6SL3210-1PC24-2UL0	6SL3210-1PC25-4UL0	6SL3210-1PC26-8UL0
Product designation		PM240-2 Power Modules standard variant without integrated line filter				
Article No.		6SL3210-1PC22-2AL0	6SL3210-1PC22-8AL0	–	–	–
Product designation		PM240-2 Power Modules standard variant with integrated line filter class A				
Line voltage 200 ... 240 V 3 AC						
Output current at 50 Hz 230 V 3 AC						
• Rated current I_{rated} [1]	A	22	28	42	54	68
• For S6 duty (40 %) I_{S6}	A	24.2	30.8	50	64	81
• Base-load current I_H [2]	A	17.5	22	35	42	54
• Maximum current I_{max}	A	35	44	70	84	108
Type rating						
• Based on I_{rated}	kW (hp)	5.5 (7.5)	7.5 (10)	11 (15)	15 (20)	18.5 (25)
• Based on I_H	kW (hp)	4 (5)	5.5 (7.5)	7.5 (10)	11 (15)	15 (20)
Rated pulse frequency	kHz	4	4	4	4	4
Efficiency η	%	>97	>97	>97	>97	>97
Power loss [3] at rated current	kW	0.2	0.26	0.45	0.61	0.82
Cooling air requirement	m^3/s (ft^3/s)	0.0185 (0.65)	0.0185 (0.65)	0.055 (1.9)	0.055 (1.9)	0.055 (1.9)
Sound pressure level L_{pA} (1 m)	dB	<65	<65	45 ... 65 [4]	45 ... 65 [4]	45 ... 65 [4]
Input current [5]						
• Rated current	A	28.6	36.4	40	51	64
• Based on I_H	A	26.2	33	36	43	56
Line supply connection U1/L1, V1/L2, W1/L3		Terminal connector	Terminal connector	Screw terminals	Screw terminals	Screw terminals
• Conductor cross-section	mm^2	6 ... 16	6 ... 16	10 ... 35	10 ... 35	10 ... 35
Motor connection U2, V2, W2		Terminal connector	Terminal connector	Screw terminals	Screw terminals	Screw terminals
• Conductor cross-section	mm^2	6 ... 16	6 ... 16	10 ... 35	10 ... 35	10 ... 35
PE connection		Included in terminal connector	Included in terminal connector	Screw terminals	Screw terminals	Screw terminals
Motor cable length, max.						
• Shielded	m (ft)	50 (164)	50 (164)	200 (656)	200 (656)	200 (656)
• Unshielded	m (ft)	100 (328)	100 (328)	300 (984)	300 (984)	300 (984)
Degree of protection		IP20	IP20	IP20	IP20	IP20
Dimensions						
• Width	mm (in)	140 (5.51)	140 (5.51)	200 (7.87)	200 (7.87)	200 (7.87)
• Height	mm (in)	355 (13.98)	355 (13.98)	472 (18.58)	472 (18.58)	472 (18.58)
• Depth without operator panel	mm (in)	165 (6.50)	165 (6.50)	237 (9.33)	237 (9.33)	237 (9.33)
Frame size		FSC	FSC	FSD	FSD	FSD
Net weight						
• Without integrated line filter	kg (lb)	5 (11.0)	5 (11.0)	17 (37.5)	17 (37.5)	17 (37.5)
• With integrated line filter	kg (lb)	5.2 (11.5)	5.2 (11.5)	–	–	–

[1] The rated output current I_{rated} is based on the duty cycle for low overload (LO).

[2] The base-load current I_H is based on the duty cycle for high overload (HO).

[3] Typical values. More information can be found on the Internet at https://support.industry.siemens.com/cs/document/94059311

[4] Values dependent on ambient temperature and utilization.

[5] The input current depends on the motor load and line impedance. The input currents apply for a load with the type rating (based on I_{rated}) for a line impedance corresponding to u_k = 1%. The current values are specified on the rating plate of the Power Module.

© Siemens 2022

Technical specifications (continued)

Article No.		6SL3210-1PC28-0UL0	6SL3210-1PC31-1UL0	6SL3210-1PC31-3UL0	6SL3210-1PC31-6UL0	6SL3210-1PC31-8UL0
Product designation		PM240-2 Power Modules standard variant without integrated line filter				
Article No.		–	–	–	–	–
Product designation		PM240-2 Power Modules standard variant with integrated line filter class A				
Line voltage 200 ... 240 V 3 AC						
Output current at 50 Hz 230 V 3 AC						
• Rated current I_{rated} [1]	A	80	104	130	154	178
• For S6 duty (40 %) I_{S6}	A	96	124	156	184	213
• Base-load current I_H [2]	A	68	80	104	130	154
• Maximum current I_{max}	A	136	160	208	260	308
Type rating						
• Based on I_{rated}	kW (hp)	22 (30)	30 (40)	37 (50)	45 (60)	55 (75)
• Based on I_H	kW (hp)	18.5 (25)	22 (30)	30 (40)	37 (50)	45 (60)
Rated pulse frequency	kHz	4	4	4	4	4
Efficiency η	%	>97	>97	>97	>97	>97
Power loss [3] at rated current	kW	0.92	1.28	1.38	1.72	2.09
Cooling air requirement	m^3/s (ft^3/s)	0.083 (2.9)	0.083 (2.9)	0.153 (5.4)	0.153 (5.4)	0.153 (5.4)
Sound pressure level L_{pA} (1 m)	dB	44 ... 62 [4]	44 ... 62 [4]	56 ... 68 [4]	56 ... 68 [4]	56 ... 68 [4]
Input current [5]						
• Rated current	A	76	98	126	149	172
• Based on I_H	A	71	83	110	138	164
Line supply connection U1/L1, V1/L2, W1/L3		Screw terminals	Screw terminals	M10 screw stud	M10 screw stud	M10 screw stud
• Conductor cross-section	mm^2	25 ... 70	25 ... 70	35 ... 2 × 120	35 ... 2 × 120	35 ... 2 × 120
Motor connection U2, V2, W2		Screw terminals	Screw terminals	M10 screw stud	M10 screw stud	M10 screw stud
• Conductor cross-section	mm^2	25 ... 70	25 ... 70	35 ... 2 × 120	35 ... 2 × 120	35 ... 2 × 120
PE connection		Screw terminals	Screw terminals	M10 screw stud	M10 screw stud	M10 screw stud
Motor cable length, max.						
• Shielded	m (ft)	200 (656)	200 (656)	300 (984)	300 (984)	300 (984)
• Unshielded	m (ft)	300 (984)	300 (984)	450 (1476)	450 (1476)	450 (1476)
Degree of protection		IP20	IP20	IP20	IP20	IP20
Dimensions						
• Width	mm (in)	275 (10.83)	275 (10.83)	305 (12.01)	305 (12.01)	305 (12.01)
• Height	mm (in)	551 (21.69)	551 (21.69)	708 (27.87)	708 (27.87)	708 (27.87)
• Depth without operator panel	mm (in)	237 (9.33)	237 (9.33)	357 (14.06)	357 (14.06)	357 (14.06)
Frame size		FSE	FSE	FSF	FSF	FSF
Net weight						
• Without integrated line filter	kg (lb)	26 (57.3)	26 (57.3)	57 (126)	57 (126)	57 (126)
• With integrated line filter	kg (lb)	–	–	–	–	–

[1] The rated output current I_{rated} is based on the duty cycle for low overload (LO).

[2] The base-load current I_H is based on the duty cycle for high overload (HO).

[3] Typical values. More information can be found on the Internet at https://support.industry.siemens.com/cs/document/94059311

[4] Values dependent on ambient temperature and utilization.

[5] The input current depends on the motor load and line impedance. The input currents apply for a load with the type rating (based on I_{rated}) for a line impedance corresponding to u_k = 1%. The current values are specified on the rating plate of the Power Module.

© Siemens 2022

Technical specifications (continued)

Article No.		6SL3210-1PE11-8UL1	6SL3210-1PE12-3UL1	6SL3210-1PE13-2UL1	6SL3210-1PE14-3UL1	6SL3210-1PE16-1UL1	6SL3210-1PE18-0UL1
Product designation		PM240-2 Power Modules standard variant without integrated line filter					
Article No.		6SL3210-1PE11-8AL1	6SL3210-1PE12-3AL1	6SL3210-1PE13-2AL1	6SL3210-1PE14-3AL1	6SL3210-1PE16-1AL1	6SL3210-1PE18-0AL1
Product designation		PM240-2 Power Modules standard variant with integrated line filter class A					
Line voltage 380 ... 480 V 3 AC							
Output current at 50 Hz 400 V 3 AC							
• Rated current I_{rated} [1]	A	1.7	2.2	3.1	4.1	5.9	7.7
• For S6 duty (40 %) I_{S6}	A	2	2.5	3.5	4.5	6.5	8.5
• Base-load current I_H [2]	A	1.3	1.7	2.2	3.1	4.1	5.9
• Maximum current I_{max}	A	2.6	3.4	4.7	6.2	8.9	11.8
Type rating							
• Based on I_{rated}	kW (hp)	0.55 (0.75)	0.75 (1)	1.1 (1.5)	1.5 (2)	2.2 (3)	3 (4)
• Based on I_H	kW (hp)	0.37 (0.5)	0.55 (0.75)	0.75 (1)	1.1 (1.5)	1.5 (2)	2.2 (3)
Rated pulse frequency	kHz	4	4	4	4	4	4
Efficiency η	%	>96	>96	>96	>96	>96	>96
Power loss [3] at rated current	kW	0.04	0.04	0.04	0.07	0.1	0.12
Cooling air requirement	m^3/s (ft^3/s)	0.005 (0.18)	0.005 (0.18)	0.005 (0.18)	0.005 (0.18)	0.005 (0.18)	0.005 (0.18)
Sound pressure level L_{pA} (1 m)	dB	<50	<50	<50	<50	<57	<57
Input current [4]							
• Rated current	A	2.3	2.9	4.1	5.5	7.7	10.1
• Based on I_H	A	2	2.6	3.3	4.7	6.1	8.8
Line supply connection U1/L1, V1/L2, W1/L3		Terminal connector	Terminal connector	Terminal connector	Terminal connector	Terminal connector	Terminal connector
• Conductor cross-section	mm^2	1 ... 2.5	1 ... 2.5	1 ... 2.5	1 ... 2.5	1 ... 2.5	1 ... 2.5
Motor connection U2, V2, W2		Terminal connector	Terminal connector	Terminal connector	Terminal connector	Terminal connector	Terminal connector
• Conductor cross-section	mm^2	1 ... 2.5	1 ... 2.5	1 ... 2.5	1 ... 2.5	1 ... 2.5	1 ... 2.5
PE connection		Included in terminal connector	Included in terminal connector	Included in terminal connector	Included in terminal connector	Included in terminal connector	Included in terminal connector
Motor cable length, max.							
• Without filter, shielded/unshielded	m (ft)	150/150 (492/492)	150/150 (492/492)	150/150 (492/492)	150/150 (492/492)	150/150 (492/492)	150/150 (492/492)
• With integrated filter class A, shielded/unshielded	m (ft)	50/100 (164/328)	50/100 (164/328)	50/100 (164/328)	50/100 (164/328)	50/100 (164/328)	50/100 (164/328)
Degree of protection		IP20	IP20	IP20	IP20	IP20	IP20
Dimensions							
• Width	mm (in)	73 (2.87)	73 (2.87)	73 (2.87)	73 (2.87)	73 (2.87)	73 (2.87)
• Height	mm (in)	196 (7.72)	196 (7.72)	196 (7.72)	196 (7.72)	196 (7.72)	196 (7.72)
• Depth without operator panel	mm (in)	165 (6.50)	165 (6.50)	165 (6.50)	165 (6.50)	165 (6.50)	165 (6.50)
Frame size		FSA	FSA	FSA	FSA	FSA	FSA
Net weight							
• Without integrated line filter	kg (lb)	1.3 (2.87)	1.3 (2.87)	1.3 (2.87)	1.4 (3.09)	1.4 (3.09)	1.4 (3.09)
• With integrated line filter	kg (lb)	1.5 (3.31)	1.5 (3.31)	1.5 (3.31)	1.6 (3.53)	1.6 (3.53)	1.6 (3.53)

[1] The rated output current I_{rated} is based on the duty cycle for low overload (LO).

[2] The base-load current I_H is based on the duty cycle for high overload (HO).

[3] Typical values. More information can be found on the Internet at https://support.industry.siemens.com/cs/document/94059311

[4] The input current depends on the motor load and line impedance. The input currents apply for a load with the type rating (based on I_{rated}) for a line impedance corresponding to u_k = 1%. The current values are specified on the rating plate of the Power Module.

© Siemens 2022

Technical specifications (continued)

Article No.		6SL3210-1PE21-1UL0	6SL3210-1PE21-4UL0	6SL3210-1PE21-8UL0	6SL3210-1PE22-7UL0	6SL3210-1PE23-3UL0
Product designation		PM240-2 Power Modules standard variant without integrated line filter				
Article No.		6SL3210-1PE21-1AL0	6SL3210-1PE21-4AL0	6SL3210-1PE21-8AL0	6SL3210-1PE22-7AL0	6SL3210-1PE23-3AL0
Product designation		PM240-2 Power Modules standard variant with integrated line filter class A				
Line voltage 380 ... 480 V 3 AC						
Output current at 50 Hz 400 V 3 AC						
• Rated current I_{rated} [1]	A	10.2	13.2	18	26	32
• For S6 duty (40 %) I_{S6}	A	11.2	14.5	19.8	28.6	37.1
• Base-load current I_H [2]	A	7.7	10.2	13.2	18	26
• Maximum current I_{max}	A	15.4	20.4	27	39	52
Type rating						
• Based on I_{rated}	kW (hp)	4 (5)	5.5 (7.5)	7.5 (10)	11 (15)	15 (20)
• Based on I_H	kW (hp)	3 (4)	4 (5)	5.5 (7.5)	7.5 (10)	11 (15)
Rated pulse frequency	kHz	4	4	4	4	4
Efficiency η	%	>97	>97	>97	>97	>97
Power loss [3] at rated current	kW	0.11	0.15	0.2	0.3	0.37
Cooling air requirement	m^3/s (ft^3/s)	0.0092 (0.32)	0.0092 (0.32)	0.0092 (0.32)	0.0185 (0.65)	0.0185 (0.65)
Sound pressure level L_{pA} (1 m)	dB	<62	<62	<62	<65	<65
Input current [4]						
• Rated current	A	13.3	17.2	22.2	32.6	39.9
• Based on I_H	A	11.6	15.3	19.8	27	36
Line supply connection U1/L1, V1/L2, W1/L3		Terminal connector	Terminal connector	Terminal connector	Terminal connector	Terminal connector
• Conductor cross-section	mm^2	1.5 ... 6	1.5 ... 6	1.5 ... 6	6 ... 16	6 ... 16
Motor connection U2, V2, W2		Terminal connector	Terminal connector	Terminal connector	Terminal connector	Terminal connector
• Conductor cross-section	mm^2	1.5 ... 6	1.5 ... 6	1.5 ... 6	6 ... 16	6 ... 16
PE connection		Included in terminal connector	Included in terminal connector	Included in terminal connector	Included in terminal connector	Included in terminal connector
Motor cable length, max.						
• Without filter, shielded/unshielded	m (ft)	150/150 (492/492)	150/150 (492/492)	150/150 (492/492)	150/150 (492/492)	150/150 (492/492)
• With integrated filter class A, shielded/unshielded	m (ft)	100/100 (328/328) [5]	100/100 (328/328) [5]	100/100 (328/328) [5]	150/150 (492/492) [5]	150/150 (492/492) [5]
Degree of protection		IP20	IP20	IP20	IP20	IP20
Dimensions						
• Width	mm (in)	100 (3.94)	100 (3.94)	100 (3.94)	140 (5.51)	140 (5.51)
• Height	mm (in)	292 (11.50)	292 (11.50)	292 (11.50)	355 (13.98)	355 (13.98)
• Depth without operator panel	mm (in)	165 (6.50)	165 (6.50)	165 (6.50)	165 (6.50)	165 (6.50)
Frame size		FSB	FSB	FSB	FSC	FSC
Net weight						
• Without integrated line filter	kg (lb)	2.9 (6.39)	2.9 (6.39)	3 (6.62)	4.7 (10.4)	4.8 (10.6)
• With integrated line filter	kg (lb)	3.1 (6.84)	3.1 (6.84)	3.2 (7.06)	5.3 (11.7)	5.4 (11.91)

[1] The rated output current I_{rated} is based on the duty cycle for low overload (LO).

[2] The base-load current I_H is based on the duty cycle for high overload (HO).

[3] Typical values. More information can be found on the Internet at https://support.industry.siemens.com/cs/document/94059311

[4] The input current depends on the motor load and line impedance. The input currents apply for a load with the type rating (based on I_{rated}) for a line impedance corresponding to u_k = 1%. The current values are specified on the rating plate of the Power Module.

[5] The values are applicable for low capacitance cables, e.g. MOTION-CONNECT. For standard CY cables the max. permissible motor cable length is 50 m (164 ft) (shielded) and 100 m (328 ft) (unshielded).

© Siemens 2022

Technical specifications (continued)

Article No.		6SL3210-1PE23-8UL0	6SL3210-1PE24-5UL0	6SL3210-1PE26-0UL0	6SL3210-1PE27-5UL0	6SL3210-1PE28-8UL0	6SL3210-1PE31-1UL0
Product designation		PM240-2 Power Modules standard variant without integrated line filter					
Article No.		6SL3210-1PE23-8AL0	6SL3210-1PE24-5AL0	6SL3210-1PE26-0AL0	6SL3210-1PE27-5AL0	6SL3210-1PE28-8AL0	6SL3210-1PE31-1AL0
Product designation		PM240-2 Power Modules standard variant with integrated line filter class A					
Line voltage 380 ... 480 V 3 AC							
Output current at 50 Hz 400 V 3 AC							
• Rated current I_{rated} [1]	A	38	45	60	75	90	110
• For S6 duty (40 %) I_{S6}	A	45	54	72	90	108	132
• Base-load current I_H [2]	A	32	38	45	60	75	90
• Maximum current I_{max}	A	64	76	90	120	150	180
Type rating							
• Based on I_{rated}	kW (hp)	18.5 (25)	22 (30)	30 (40)	37 (50)	45 (60)	55 (75)
• Based on I_H	kW (hp)	15 (20)	18.5 (25)	22 (30)	30 (40)	37 (50)	45 (60)
Rated pulse frequency	kHz	4	4	4	4	4	4
Efficiency η	%	>97	>97	>97	>97	>97	>97
Power loss [3] at rated current							
• Without integrated line filter	kW	0.57	0.7	0.82	1.09	1.29	1.65
• With integrated line filter	kW	0.58	0.71	0.83	1.1	1.3	1.67
Cooling air requirement	m^3/s (ft^3/s)	0.055 (1.9)	0.055 (1.9)	0.055 (1.9)	0.055 (1.9)	0.083 (2.9)	0.083 (2.9)
Sound pressure level L_{pA} (1 m)	dB	45 ... 65 [4]	45 ... 65 [4]	45 ... 65 [4]	45 ... 65 [4]	44 ... 62 [4]	44 ... 62 [4]
Input current [5]							
• Rated current	A	36	42	57	70	86	104
• Based on I_H	A	33	38	47	62	78	94
Line supply connection U1/L1, V1/L2, W1/L3		Screw terminals	Screw terminals	Screw terminals	Screw terminals	Screw terminals	Screw terminals
• Conductor cross-section	mm^2	10 ... 35	10 ... 35	10 ... 35	10 ... 35	25 ... 70	25 ... 70
Motor connection U2, V2, W2		Screw terminals	Screw terminals	Screw terminals	Screw terminals	Screw terminals	Screw terminals
• Conductor cross-section	mm^2	10 ... 35	10 ... 35	10 ... 35	10 ... 35	25 ... 70	25 ... 70
PE connection		Screw terminals	Screw terminals	Screw terminals	Screw terminals	Screw terminals	Screw terminals
Motor cable length, max.							
• Shielded	m (ft)	200 (656)	200 (656)	200 (656)	200 (656)	200 (656)	200 (656)
• Unshielded	m (ft)	300 (984)	300 (984)	300 (984)	300 (984)	300 (984)	300 (984)
Degree of protection		IP20	IP20	IP20	IP20	IP20	IP20
Dimensions							
• Width	mm (in)	200 (7.87)	200 (7.87)	200 (7.87)	200 (7.87)	275 (10.83)	275 (10.83)
• Height	mm (in)	472 (18.58)	472 (18.58)	472 (18.58)	472 (18.58)	551 (21.69)	551 (21.69)
• Depth without operator panel	mm (in)	237 (9.33)	237 (9.33)	237 (9.33)	237 (9.33)	237 (9.33)	237 (9.33)
Frame size		FSD	FSD	FSD	FSD	FSE	FSE
Net weight							
• Without integrated line filter	kg (lb)	16 (35.3)	16 (35.3)	17 (37.5)	17 (37.5)	26 (57.3)	26 (57.3)
• With integrated line filter	kg (lb)	17.5 (38.6)	17.5 (38.6)	18.5 (40.8)	18.5 (40.8)	28 (61.7)	28 (61.7)

[1] The rated output current I_{rated} is based on the duty cycle for low overload (LO).

[2] The base-load current I_H is based on the duty cycle for high overload (HO).

[3] Typical values. More information can be found on the Internet at https://support.industry.siemens.com/cs/document/94059311

[4] Values dependent on ambient temperature and utilization.

[5] The input current depends on the motor load and line impedance. The input currents apply for a load with the type rating (based on I_{rated}) for a line impedance corresponding to u_k = 1%. The current values are specified on the rating plate of the Power Module.

© Siemens 2022

Technical specifications (continued)

Article No.		6SL3210-1PE31-5UL0	6SL3210-1PE31-8UL0
Product designation		PM240-2 Power Modules standard variant without integrated line filter	
Article No.		6SL3210-1PE31-5AL0	6SL3210-1PE31-8AL0
Product designation		PM240-2 Power Modules standard variant with integrated line filter class A	
Line voltage 380 ... 480 V 3 AC			
Output current at 50 Hz 400 V 3 AC			
• Rated current I_{rated} [1]	A	145	178
• For S6 duty (40 %) I_{S6}	A	174	213
• Base-load current I_H [2]	A	110	145
• Maximum current I_{max}	A	220	290
Type rating			
• Based on I_{rated}	kW (hp)	75 (100)	90 (125)
• Based on I_H	kW (hp)	55 (75)	75 (100)
Rated pulse frequency	kHz	2	2
Efficiency η	%	>97	>97
Power loss [3] at rated current			
• Without integrated line filter	kW	1.91	2.46
• With integrated line filter	kW	1.93	2.48
Cooling air requirement	m^3/s (ft^3/s)	0.153 (5.40)	0.153 (5.40)
Sound pressure level L_{pA} (1 m)	dB	56 ... 68 [4]	56 ... 68 [4]
Input current [5]			
• Rated current	A	140	172
• Based on I_H	A	117	154
Line supply connection U1/L1, V1/L2, W1/L3		M10 screw stud	M10 screw stud
• Conductor cross-section	mm^2	35 ... 2 × 120	35 ... 2 × 120
Motor connection U2, V2, W2		M10 screw stud	M10 screw stud
• Conductor cross-section	mm^2	35 ... 2 × 120	35 ... 2 × 120
PE connection		M10 screw stud	M10 screw stud
Motor cable length, max.			
• Shielded	m (ft)	300 (984)	300 (984)
• Unshielded	m (ft)	450 (1476)	450 (1476)
Degree of protection		IP20	IP20
Dimensions			
• Width	mm (in)	305 (12.01)	305 (12.01)
• Height	mm (in)	708 (27.87)	708 (27.87)
• Depth without operator panel	mm (in)	357 (14.06)	357 (14.06)
Frame size		FSF	FSF
Net weight			
• Without integrated line filter	kg (lb)	57 (126)	57 (126)
• With integrated line filter	kg (lb)	63 (139)	63 (139)

[1] The rated output current I_{rated} is based on the duty cycle for low overload (LO).

[2] The base-load current I_H is based on the duty cycle for high overload (HO).

[3] Typical values. More information can be found on the Internet at https://support.industry.siemens.com/cs/document/94059311

[4] Values dependent on ambient temperature and utilization.

[5] The input current depends on the motor load and line impedance. The input currents apply for a load with the type rating (based on I_{rated}) for a line impedance corresponding to u_k = 1%. The current values are specified on the rating plate of the Power Module.

© Siemens 2022

Selection and ordering data

To ensure that a suitable Power Module is selected, the following currents should be used for applications:

- Rated output current for applications with low overload (LO)
- Base-load current for applications with high overload (HO)

With reference to the rated output current, the modules support at least 2-pole to 6-pole low-voltage motors, e.g. the SIMOTICS 1LE1 motor series. The type rating is merely a guide value. For a description of the overload performance, please refer to the general technical specifications of the Power Modules.

PM240-2 Power Modules standard variant

Type rating [1]		Rated output current I_{rated} [2]	Power based on the base-load current [3]		Base-load current I_H [3]	Frame size	PM240-2 Power Module standard variant without integrated line filter	PM240-2 Power Module standard variant with integrated line filter class A
kW	hp	A	kW	hp	A		Article No.	Article No.
200 ... 240 V 1 AC/3 AC								
0.55	0.75	3.2	**0.37**	0.5	2.3	FSA	**6SL3210-1PB13-0UL0**	**6SL3210-1PB13-0AL0**
0.75	1	4.2	**0.55**	0.75	3.2	FSA	**6SL3210-1PB13-8UL0**	**6SL3210-1PB13-8AL0**
1.1	1.5	6	**0.75**	1	4.2	FSB	**6SL3210-1PB15-5UL0**	**6SL3210-1PB15-5AL0**
1.5	2	7.4	**1.1**	1.5	6	FSB	**6SL3210-1PB17-4UL0**	**6SL3210-1PB17-4AL0**
2.2	3	10.4	**1.5**	2	7.4	FSB	**6SL3210-1PB21-0UL0**	**6SL3210-1PB21-0AL0**
3	4	13.6	**2.2**	3	10.4	FSC	**6SL3210-1PB21-4UL0**	**6SL3210-1PB21-4AL0**
4	5	17.5	**3**	4	13.6	FSC	**6SL3210-1PB21-8UL0**	**6SL3210-1PB21-8AL0**
200 ... 240 V 3 AC								
5.5	7.5	22	**4**	5	17.5	FSC	**6SL3210-1PC22-2UL0**	**6SL3210-1PC22-2AL0**
7.5	10	28	**5.5**	7.5	22	FSC	**6SL3210-1PC22-8UL0**	**6SL3210-1PC22-8AL0**
11	15	42	**7.5**	10	35	FSD	**6SL3210-1PC24-2UL0**	–
15	20	54	**11**	15	42	FSD	**6SL3210-1PC25-4UL0**	–
18.5	25	68	**15**	20	54	FSD	**6SL3210-1PC26-8UL0**	–
22	30	80	**18.5**	25	68	FSE	**6SL3210-1PC28-0UL0**	–
30	40	104	**22**	30	80	FSE	**6SL3210-1PC31-1UL0**	–
37	50	130	**30**	40	104	FSF	**6SL3210-1PC31-3UL0**	–
45	60	154	**37**	50	130	FSF	**6SL3210-1PC31-6UL0**	–
55	75	178	**45**	60	154	FSF	**6SL3210-1PC31-8UL0**	–
380 ... 480 V 3 AC [4]								
0.55	0.75	1.7	**0.37**	0.5	1.3	FSA	**6SL3210-1PE11-8UL1**	**6SL3210-1PE11-8AL1**
0.75	1	2.2	**0.55**	0.75	1.7	FSA	**6SL3210-1PE12-3UL1**	**6SL3210-1PE12-3AL1**
1.1	1.5	3.1	**0.75**	1	2.2	FSA	**6SL3210-1PE13-2UL1**	**6SL3210-1PE13-2AL1**
1.5	2	4.1	**1.1**	1.5	3.1	FSA	**6SL3210-1PE14-3UL1**	**6SL3210-1PE14-3AL1**
2.2	3	5.9	**1.5**	2	4.1	FSA	**6SL3210-1PE16-1UL1**	**6SL3210-1PE16-1AL1**
3	4	7.7	**2.2**	3	5.9	FSA	**6SL3210-1PE18-0UL1**	**6SL3210-1PE18-0AL1**
4	5	10.2	**3**	4	7.7	FSB	**6SL3210-1PE21-1UL0**	**6SL3210-1PE21-1AL0**
5.5	7.5	13.2	**4**	5	10.2	FSB	**6SL3210-1PE21-4UL0**	**6SL3210-1PE21-4AL0**
7.5	10	18	**5.5**	7.5	13.2	FSB	**6SL3210-1PE21-8UL0**	**6SL3210-1PE21-8AL0**
11	15	26	**7.5**	10	18	FSC	**6SL3210-1PE22-7UL0**	**6SL3210-1PE22-7AL0**
15	20	32	**11**	15	26	FSC	**6SL3210-1PE23-3UL0**	**6SL3210-1PE23-3AL0**
18.5	25	38	**15**	20	32	FSD	**6SL3210-1PE23-8UL0**	**6SL3210-1PE23-8AL0**
22	30	45	**18.5**	25	38	FSD	**6SL3210-1PE24-5UL0**	**6SL3210-1PE24-5AL0**
30	40	60	**22**	30	45	FSD	**6SL3210-1PE26-0UL0**	**6SL3210-1PE26-0AL0**
37	50	75	**30**	40	60	FSD	**6SL3210-1PE27-5UL0**	**6SL3210-1PE27-5AL0**
45	60	90	**37**	50	75	FSE	**6SL3210-1PE28-8UL0**	**6SL3210-1PE28-8AL0**
55	75	110	**45**	60	90	FSE	**6SL3210-1PE31-1UL0**	**6SL3210-1PE31-1AL0**
75	100	145	**55**	75	110	FSF	**6SL3210-1PE31-5UL0**	**6SL3210-1PE31-5AL0**
90	125	178	**75**	100	145	FSF	**6SL3210-1PE31-8UL0**	**6SL3210-1PE31-8AL0**

[1] Type rating based on the rated output current I_{rated}. The rated output current I_{rated} is based on the duty cycle for low overload (LO).

[2] The rated output current I_{rated} is based on the duty cycle for low overload (LO). These current values are valid for 200 V, 400 V or 690 V and are specified on the rating plate of the Power Module.

[3] The base-load current I_H is based on the duty cycle for high overload (HO).

[4] SIPLUS components for extreme requirements are available. Additional information is available on the Internet at www.siemens.de/siplus-drives

© Siemens 2022

Characteristic curves

Overload capability

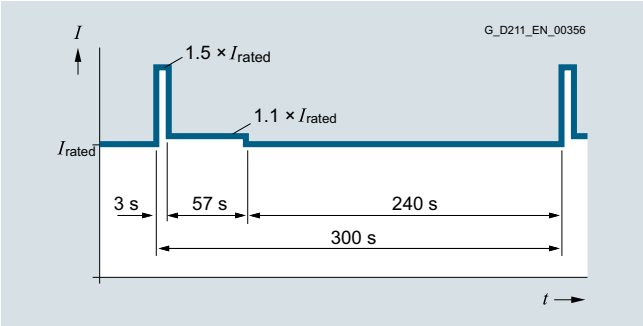

300 s duty cycle based on low overload

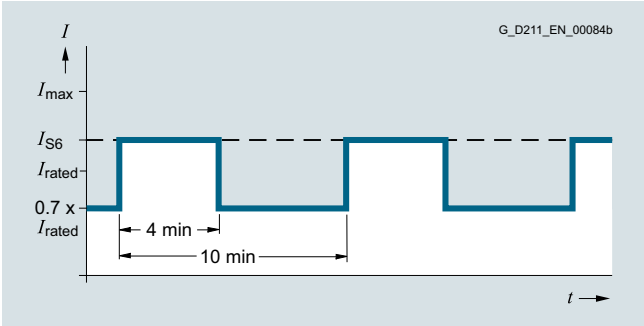

S6 duty cycle with previous load with a duty cycle duration of 600 s

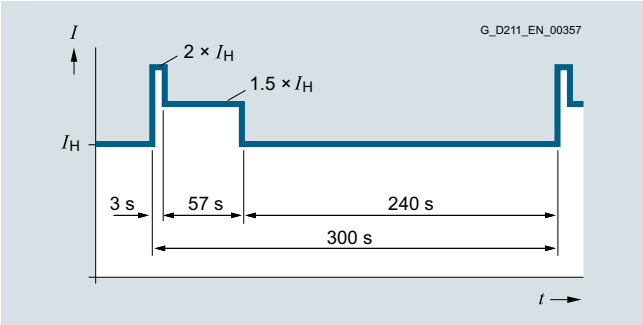

300 s duty cycle based on high overload

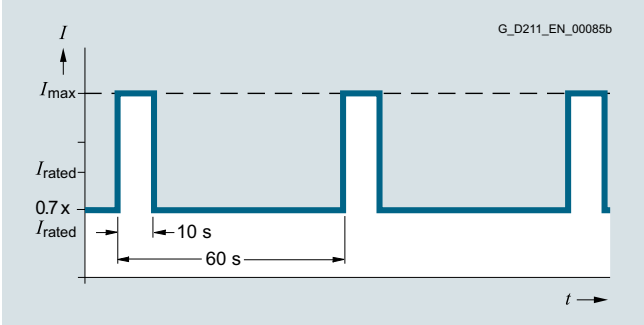

S6 duty cycle with previous load with a duty cycle duration of 60 s

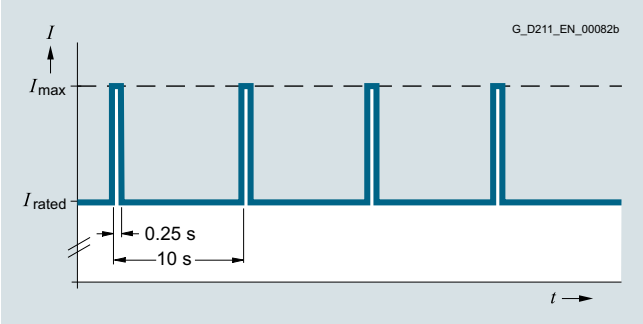

Duty cycle with previous load

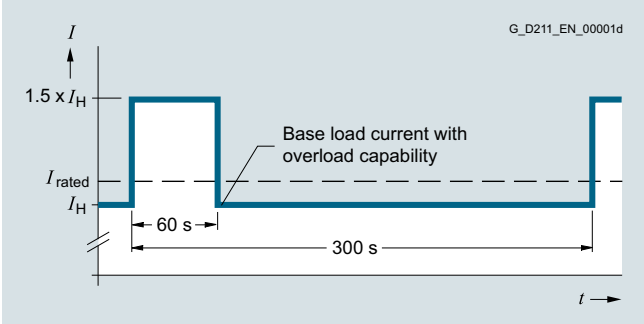

Duty cycle with 60 s overload with a duty cycle duration of 300 s

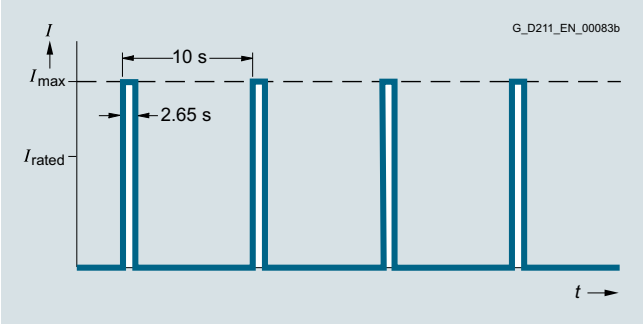

Duty cycle without previous load

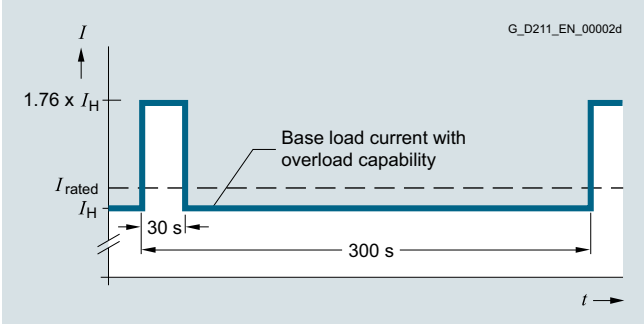

Duty cycle with 30 s overload with a duty cycle duration of 300 s

© Siemens 2022

Characteristic curves (continued)

Derating data

Pulse frequency

Type rating [1] at 50 Hz 200 V 1 AC/3 AC		**Rated output current in A** for a pulse frequency of							
kW	hp	2 kHz	4 kHz	6 kHz	8 kHz	10 kHz	12 kHz	14 kHz	16 kHz
0.55	0.75	3.2	3.2	2.7	2.2	1.9	1.6	1.4	1.3
0.75	1	4.2	4.2	3.6	2.9	2.5	2.1	1.9	1.7
1.1	1.5	6	6	5.1	4.2	3.6	3	2.7	2.4
1.5	2	7.4	7.4	6.3	5.2	4.4	3.7	3.3	3
2.2	3	10.4	10.4	8.8	7.3	6.2	5.2	4.7	4.2
3	4	13.6	13.6	11.6	9.5	8.2	6.8	6.1	5.4
4	5	17.5	17.5	14.9	12.3	10.5	8.8	7.9	7
5.5	7.5	22	22	18.7	15.4	13.2	11	9.9	8.8
7.5	10	28	28	23.8	19.6	16.8	14	12.6	11.2
11	15	42	42	35.7	29.4	25.2	21	18.9	16.8
15	20	54	54	45.9	37.8	32.4	27	24.3	21.6
18.5	25	68	68	57.8	47.6	40.8	34	30.6	27.2
22	30	80	80	68	56	48	40	36	32
30	40	104	104	88.4	72.8	62.4	52	46.8	41.6
37	50	130	130	110.5	91	–	–	–	–
45	60	154	154	130.9	107.8	–	–	–	–
55	75	178	178	151.3	124.6	–	–	–	–

Type rating [1] at 50 Hz 400 V 3 AC		**Rated output current in A** for a pulse frequency of							
kW	hp	2 kHz	4 kHz	6 kHz	8 kHz	10 kHz	12 kHz	14 kHz	16 kHz
0.55	0.75	1.7	1.7	1.4	1.2	1	0.9	0.8	0.7
0.75	1	2.2	2.2	1.9	1.5	1.3	1.1	1	0.9
1.1	1.5	3.1	3.1	2.6	2.2	1.9	1.6	1.4	1.2
1.5	2	4.1	4.1	3.5	2.9	2.5	2.1	1.8	1.6
2.2	3	5.9	5.9	5	4.1	3.5	3	2.7	2.4
3	4	7.7	7.7	6.5	5.4	4.6	3.9	3.5	3.1
4	5	10.2	10.2	8.7	7.1	6.1	5.1	4.6	4.1
5.5	7.5	13.2	13.2	11.2	9.2	7.9	6.6	5.9	5.3
7.5	10	18	18	15.3	12.6	10.8	9	8.1	7.2
11	15	26	26	22.1	18.2	15.6	13	11.7	10.4
15	20	32	32	27.2	22.4	19.2	16	14.4	12.8
18.5	25	38	38	32.3	26.6	22.8	19	17.1	15.2
22	30	45	45	38.3	31.5	27	22.5	20.3	18
30	40	60	60	51	42	36	30	27	24
37	50	75	75	63.8	52.5	45	37.5	33.8	30
45	60	90	90	76.5	63	54	45	40.5	36
55	75	110	110	93.5	77	–	–	–	–
75	100	145	145	123.3	101.5	–	–	–	–
90	125	178	178	151.3	124.6	–	–	–	–

[1] Type rating based on the rated output current I_{rated}.
The rated output current I_{rated} is based on the duty cycle for low overload (LO).

© Siemens 2022

Characteristic curves (continued)

Ambient temperature

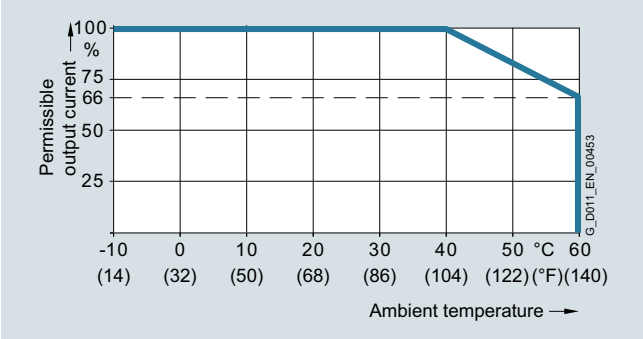

Permissible output current as a function of ambient temperature for low overload (LO) for PM240-2 Power Modules, frame sizes FSA to FSC

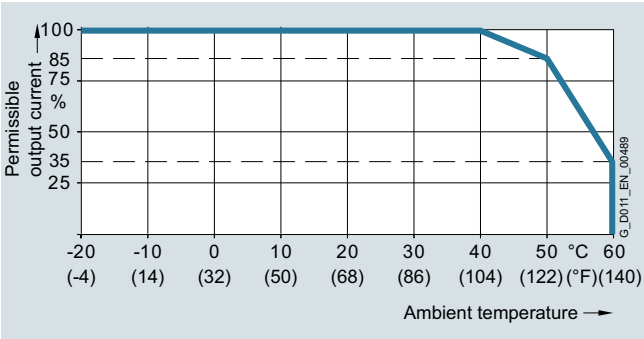

Permissible output current as a function of ambient temperature for low overload (LO) for PM240-2 Power Modules, frame sizes FSD to FSF

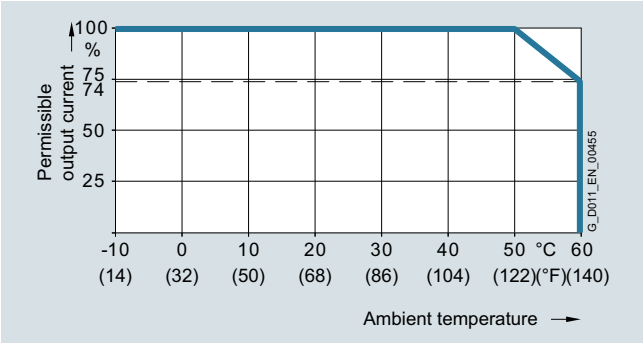

Permissible output current as a function of ambient temperature for high overload (HO) for PM240-2 Power Modules, frame sizes FSA to FSC

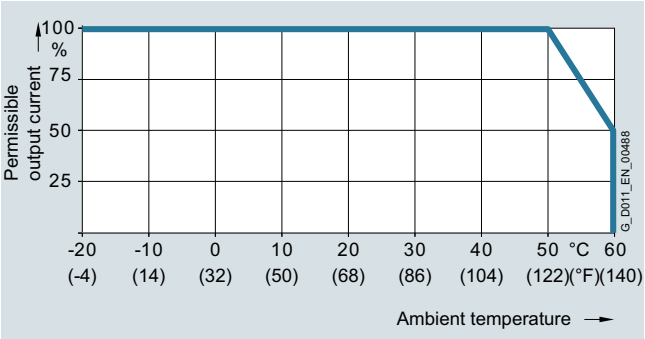

Permissible output current as a function of ambient temperature for high overload (HO) for PM240-2 Power Modules, frame sizes FSD to FSF

The operating temperature ranges of the Control Units should be taken into account.

Installation altitude

Permissible line supplies depending on the installation altitude

- Installation altitude up to 2000 m (6562 ft) above sea level
  - Connection to every supply system permitted for the converter
- Installation altitudes between 2000 m and 4000 m (6562 ft and 13124 ft) above sea level
  - Connection to a TN system with grounded neutral point
  - TN systems with grounded line conductor are not permitted
  - The TN line system with grounded neutral point can also be supplied using an isolation transformer
  - The phase-to-phase voltage does not have to be reduced

The connected motors, power elements and components must be considered separately.

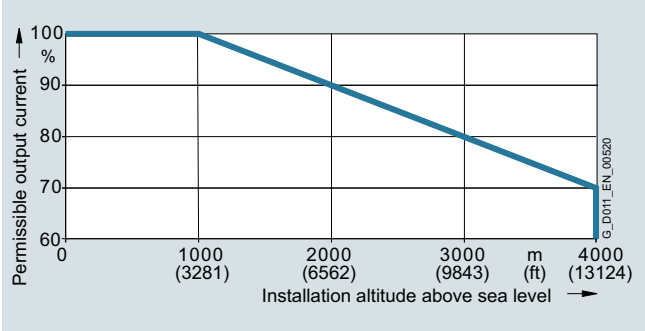

Permissible output current as a function of the installation altitude for PM240-2 Power Modules at 40 °C for low overload (LO)

System operating voltage

The rated output current remains constant over the 380 V to 480 V 3 AC voltage range.

More information on the derating data of the PM240-2 Power Modules is available in the Hardware Installation Manual on the Internet at:
www.siemens.com/sinamics-g120/documentation

© Siemens 2022

Overview

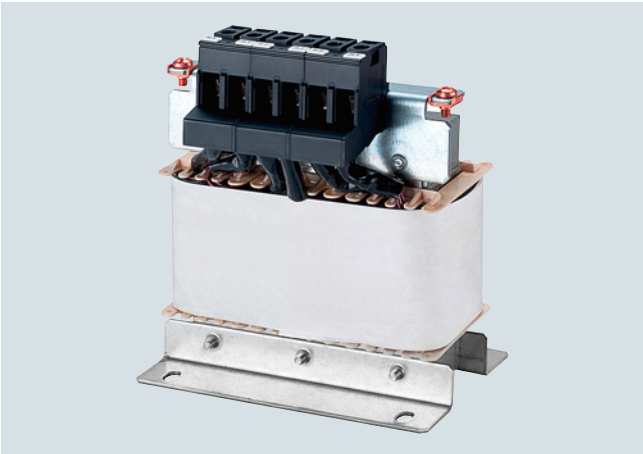

Line reactor for PM240-2 Power Modules, frame size FSA

Line reactors smooth the current drawn by the converter and thus reduce harmonic components in the line current. Through the reduction of the current harmonics, the thermal load on the power components in the rectifier and in the DC link capacitors is reduced as well as the harmonic effects on the supply. The use of a line reactor increases the service life of the converter.

Integration

A DC link reactor is integrated in the PM240-2 Power Modules, frame sizes FSD to FSF, and therefore no line reactor is required.

Line reactors that are optionally available depending on the Power Module used

	Frame size					
	FSA	**FSB**	**FSC**	**FSD**	**FSE**	**FSF**
PM240-2 Power Module with integrated braking chopper						
Available frame sizes						
• 200 V versions	✓	✓	✓	✓	✓	✓
• 400 V versions	✓	✓	✓	✓	✓	✓
Line-side power components						
Line reactors (only for 3 AC versions)	S	S	S	I	I	I

S = Lateral mounting
I = Integrated
– = Not possible

Technical specifications

Article No.		6SL3203-0CE13-2AA0	6SL3203-0CE21-0AA0	6SL3203-0CE21-8AA0	6SL3203-0CE23-8AA0
Product designation		Line reactor			
Line voltage 200 ... 240 V 3 AC or 380 ... 480 V 3 AC					
Rated current	A	4	11.3	22.3	47
Power loss at 50/60 Hz	W	23/26	36/40	53/59	88/97
Line supply/load connection 1L1, 1L2, 1L3 2L1, 2L2, 2L3		Screw terminals	Screw terminals	Screw terminals	Screw terminals
• Conductor cross-section	mm^2	4	4	10	16
PE connection		M4 × 8; U washer; spring lock washer	M4 × 8; U washer; spring lock washer	M5 × 10; U washer; spring lock washer	M5 × 10; U washer; spring lock washer
Degree of protection		IP20	IP20	IP20	IP20
Dimensions					
• Width	mm (in)	125 (4.92)	125 (4.92)	125 (4.92)	190 (7.48)
• Height	mm (in)	120 (4.72)	140 (5.51)	145 (5.71)	220 (8.66)
• Depth	mm (in)	71 (2.8)	71 (2.8)	91 (3.58)	91 (3.58)
Net weight	kg (lb)	1.1 (2.43)	2.1 (4.63)	2.95 (6.5)	7.8 (17.2)
Suitable for PM240-2 Power Module standard variant 200 ... 240 V 3 AC	Type	6SL3210-1PB13-0 . L0 6SL3210-1PB13-8 . L0	6SL3210-1PB15-5 . L0 6SL3210-1PB17-4 . L0 6SL3210-1PB21-0 . L0	6SL3210-1PB21-4 . L0 6SL3210-1PB21-8 . L0	6SL3210-1PC22-2 . L0 6SL3210-1PC22-8 . L0
• Frame size		FSA	FSB	FSC	FSC
Suitable for PM240-2 Power Module standard variant 380 ... 480 V 3 AC	Type	6SL3210-1PE11-8 . L1 6SL3210-1PE12-3 . L1 6SL3210-1PE13-2 . L1	6SL3210-1PE14-3 . L1 6SL3210-1PE16-1 . L1 6SL3210-1PE18-0 . L1	6SL3210-1PE21-1 . L0 6SL3210-1PE21-4 . L0 6SL3210-1PE21-8 . L0	6SL3210-1PE22-7 . L0 6SL3210-1PE23-3 . L0
• Frame size		FSA	FSA	FSB	FSC

© Siemens 2022

Selection and ordering data

Type rating		PM240-2 Power Module standard variant		**Line reactor**
kW	hp	Type	Frame size	Article No.
200 ... 240 V 3 AC				
0.55	0.75	6SL3210-1PB13-0 . L0	FSA	**6SL3203-0CE13-2AA0**
0.75	1	6SL3210-1PB13-8 . L0		
1.1	1.5	6SL3210-1PB15-5 . L0	FSB	**6SL3203-0CE21-0AA0**
1.5	2	6SL3210-1PB17-4 . L0		
2.2	3	6SL3210-1PB21-0 . L0		
3	4	6SL3210-1PB21-4 . L0	FSC	**6SL3203-0CE21-8AA0**
4	5	6SL3210-1PB21-8 . L0		
5.5	7.5	6SL3210-1PC22-2 . L0	FSC	**6SL3203-0CE23-8AA0**
7.5	10	6SL3210-1PC22-8 . L0		
380 ... 480 V 3 AC				
0.55	0.75	6SL3210-1PE11-8 . L1	FSA	**6SL3203-0CE13-2AA0**
0.75	1	6SL3210-1PE12-3 . L1		
1.1	1.5	6SL3210-1PE13-2 . L1		
1.5	2	6SL3210-1PE14-3 . L1	FSA	**6SL3203-0CE21-0AA0**
2.2	3	6SL3210-1PE16-1 . L1		
3	4	6SL3210-1PE18-0 . L1		
4	5	6SL3210-1PE21-1 . L0	FSB	**6SL3203-0CE21-8AA0**
5.5	7.5	6SL3210-1PE21-4 . L0		
7.5	10	6SL3210-1PE21-8 . L0		
11	15	6SL3210-1PE22-7 . L0	FSC	**6SL3203-0CE23-8AA0**
15	20	6SL3210-1PE23-3 . L0		

© Siemens 2022

Overview

Line filter for PM240-2 Power Modules

With one of the additional line filters, the Power Module attains a higher radio interference class.

Integration

Line filters that are optionally available depending on the Power Module used

	Frame size					
	FSA	**FSB**	**FSC**	**FSD**	**FSE**	**FSF**
PM240-2 Power Module with integrated braking chopper						
Available frame sizes						
• 200 V versions	✓	✓	✓	✓ [1]	✓ [1]	✓ [1]
• 400 V versions	✓	✓	✓	✓	✓	✓
Line-side power components						
Line filter class A according to EN 55011	F	F	F	F [1]	F [1]	F [1]
Line filter class B acc. to EN 5501 (only for 400 V versions)	U	U	U	–	–	–

F = Power Modules available with and without integrated filter class A
U = Base component
– = Not possible

Technical specifications

Article No.		6SL3203-0BE17-7BA0	6SL3203-0BE21-8BA0	6SL3203-0BE23-8BA0
Product designation		Line filter class B		
Line voltage 380 ... 480 V 3 AC				
Rated current	A	11.4	23.5	49.4
Pulse frequency	kHz	4 ... 16	4 ... 16	4 ... 16
Line supply connection L1, L2, L3		Screw terminals	Screw terminals	Screw terminals
• Conductor cross-section	mm^2	1 ... 2.5	2.5 ... 6	6 ... 16
Load connection U, V, W		Shielded cable	Shielded cable	Shielded cable
• Cable cross-section	mm^2	1.5	4	10
• Length	m (ft)	0.45 (1.48)	0.5 (1.64)	0.54 (1.77)
PE connection		On housing via M5 screw stud	On housing via M5 screw stud	On housing via M6 screw studs
• Conductor cross-section	mm^2	1 ... 2.5	2.5 ... 6	6 ... 16
Degree of protection		IP20	IP20	IP20
Dimensions				
• Width	mm (in)	73 (2.87)	100 (3.94)	140 (5.51)
• Height	mm (in)	202 (7.95)	297 (11.69)	359 (14.13)
• Depth	mm (in)	65 (2.56)	85 (3.35)	95 (3.74)
Possible as base component		Yes	Yes	Yes
Net weight	kg (lb)	1.75 (3.86)	4 (8.82)	7.3 (16.1
Suitable for PM240-2 Power Module Standard variant 380 ... 480 V 3 AC	Type	6SL3210-1PE11-8UL1 6SL3210-1PE12-3UL1 6SL3210-1PE13-2UL1 6SL3210-1PE14-3UL1 6SL3210-1PE16-1UL1 6SL3210-1PE18-0UL1	6SL3210-1PE21-1UL0 6SL3210-1PE21-4UL0 6SL3210-1PE21-8UL0	6SL3210-1PE22-7UL0 6SL3210-1PE23-3UL0

[1] PM240-2 200 V versions, frame sizes FSD to FSF are only available without integrated line filter.

© Siemens 2022

Selection and ordering data

Type rating		PM240-2 Power Module standard variant		**Line filter class B according to EN 55011**
kW	hp	Type 6SL3210-...	Frame size	Article No.
380 ... 480 V 3 AC				
0.55	0.75	1PE11-8UL1	FSA	**6SL3203-0BE17-7BA0**
0.75	1	1PE12-3UL1		
1.1	1.5	1PE13-2UL1		
1.5	2	1PE14-3UL1		
2.2	3	1PE16-1UL1		
3	4	1PE18-0UL1		
4	5	1PE21-1UL0	FSB	**6SL3203-0BE21-8BA0**
5.5	7.5	1PE21-4UL0		
7.5	10	1PE21-8UL0		
11	15	1PE22-7UL0	FSC	**6SL3203-0BE23-8BA0**
15	20	1PE23-3UL0		

© Siemens 2022

Overview

Selection and ordering data

Overcurrent protection devices are absolutely necessary for the operation of the converters. The following tables list recommendations for fuses.

- Siemens fuses of type 3NA3 for use in the area of validity of IEC
- UL-listed fuses Class J for use in USA and Canada

Recommendations on further overcurrent protection devices are available at:
https://support.industry.siemens.com/cs/document/109486009

The Short Circuit Current Rating (SCCR) according to UL for industrial control panel installations to NEC Article 409 or UL 508A/508C or UL 61800-5-1 is as follows for Class J fuses for

- PM240-2 Power Modules for SINAMICS S120 blocksize: 100 kA

SCCR and ICC values for combination with further overcurrent protection devices are available at:
https://support.industry.siemens.com/cs/document/109486009

Notes for installations in Canada:

The converters are intended for line supply systems with overvoltage category III. More information is available in the technical documentation on the Internet at:
www.siemens.com/sinamics-s120/documentation

More information about the listed Siemens fuses is available in the Industry Mall.

Type rating [1]		PM240-2 Power Module standard variant		IEC-compliant		UL/cUL-compliant	
				Fuse		Fuse type Rated voltage 600 V AC	
		Type		Current			Current
kW	hp	6SL3210-...	Frame size	A	Article No.	Class	A
200 ... 240 V 1 AC/3 AC							
0.55	0.75	1PB13-0 . L0	FSA	16	**3NA3805**	J	15
0.75	1	1PB13-8 . L0	FSA	16	**3NA3805**	J	15
1.1	1.5	1PB15-5 . L0	FSB	32	**3NA3812**	J	35
1.5	2	1PB17-4 . L0	FSB	32	**3NA3812**	J	35
2.2	3	1PB21-0 . L0	FSB	32	**3NA3812**	J	35
3	4	1PB21-4 . L0	FSC	50	**3NA3820**	J	50
4	5	1PB21-8 . L0	FSC	50	**3NA3820**	J	50
200 ... 240 V 3 AC							
5.5	7.5	1PC22-2 . L0	FSC	50	**3NA3820**	J	50
7.5	10	1PC22-8 . L0	FSC	50	**3NA3820**	J	50
11	15	1PC24-2UL0	FSD	63	**3NA3822**	J	60
15	20	1PC25-4UL0	FSD	80	**3NA3824**	J	70
18.5	25	1PC26-8UL0	FSD	100	**3NA3830**	J	90
22	30	1PC28-0UL0	FSE	100	**3NA3830**	J	100
30	40	1PC31-1UL0	FSE	160	**3NA3836**	J	150
37	50	1PC31-3UL0	FSF	200	**3NA3140**	J	175
45	60	1PC31-6UL0	FSF	200	**3NA3140**	J	200
55	75	1PC31-8UL0	FSF	224	**3NA3142**	J	250

[1] Type rating based on the rated output current I_{rated}.
The rated output current I_{rated} is based on the duty cycle for low overload (LO).

© Siemens 2022

Overview (continued)

Type rating [1]		PM240-2 Power Module standard variant		IEC-compliant		UL/cUL-compliant	
				Fuse		Fuse type Rated voltage 600 V AC	
		Type		Current			Current
kW	hp	6SL3210-...	Frame size	A	Article No.	Class	A
380 ... 480 V 3 AC							
0.55	0.75	1PE11-8 . L1	FSA	16	**3NA3803**	J	10
0.75	1	1PE12-3 . L1	FSA	16	**3NA3803**	J	10
1.1	1.5	1PE13-2 . L1	FSA	16	**3NA3805**	J	15
1.5	2	1PE14-3 . L1	FSA	16	**3NA3805**	J	20
2.2	3	1PE16-1 . L1	FSA	16	**3NA3805**	J	30
3	4	1PE18-0 . L1	FSA	16	**3NA3805**	J	30
4	5	1PE21-1 . L0	FSB	32	**3NA3812**	J	35
5.5	7.5	1PE21-4 . L0	FSB	32	**3NA3812**	J	35
7.5	10	1PE21-8 . L0	FSB	32	**3NA3812**	J	35
11	15	1PE22-7 . L0	FSC	50	**3NA3820**	J	50
15	20	1PE23-3 . L0	FSC	50	**3NA3820**	J	50
18.5	25	1PE23-8 . L0	FSD	63	**3NA3822**	J	60
22	30	1PE24-5 . L0	FSD	80	**3NA3824**	J	70
30	40	1PE26-0 . L0	FSD	100	**3NA3830**	J	90
37	50	1PE27-5 . L0	FSD	100	**3NA3830**	J	100
45	60	1PE28-8 . L0	FSE	125	**3NA3832**	J	125
55	75	1PE31-1 . L0	FSE	160	**3NA3836**	J	150
75	100	1PE31-5 . L0	FSF	200	**3NA3140**	J	200
90	125	1PE31-8 . L0	FSF	224	**3NA3142**	J	250

[1] Type rating based on the rated output current I_{rated}.
The rated output current I_{rated} is based on the duty cycle for low overload (LO).

© Siemens 2022

Overview

Braking resistor for PM240-2 Power Modules, frame size FSD

Excess energy in the DC link is dissipated in the braking resistor. The braking resistors are intended for use with PM240-2 Power Modules which feature an integrated braking chopper, but cannot regenerate energy to the supply system. For regenerative operation, e.g. the braking of a rotating mass with high moment of inertia, a braking resistor must be connected to convert the resulting energy into heat.

The braking resistors can be installed laterally next to the PM240-2 Power Modules. The braking resistors for the Power Modules, frame sizes FSD to FSF, should be placed outside the control cabinet or outside the switchgear room so that the heat is dissipated away from the Power Modules. The level of air conditioning required is therefore reduced.

Overview (continued)

Every braking resistor has a temperature switch (UL-listed). The temperature switch should be evaluated to prevent consequential damage if the braking resistor overheats.

Note:

Shield connection kits are available for EMC-compliant installation of Power Modules.

A shield connection kit is supplied as standard with PM240-2 Power Modules in frame sizes FSA to FSC. A set of shield plates is included in the scope of delivery for the motor and signal cables corresponding to the frame size for the frame sizes FSD to FSF. For the electromagnetically compatible connection of an optionally connectable braking resistor, the corresponding shield connection kit is to be ordered for frame sizes FSD to FSF.

Integration

Braking resistors that are optionally available depending on the Power Module used

	Frame size					
	FSA	**FSB**	**FSC**	**FSD**	**FSE**	**FSF**
PM240-2 Power Module with integrated braking chopper						
Available frame sizes						
• 200 V versions	✓	✓	✓	✓	✓	✓
• 400 V versions	✓	✓	✓	✓	✓	✓
DC link components						
Braking resistor	S	S	S	S	S	S

S = Lateral mounting
– = Not possible

Technical specifications

Article No.		JJY:023146720008	JJY:023151720007	JJY:023163720018
Product designation		Braking resistor		
Line voltage 200 V … 240 V 1 AC/3 AC				
Resistance	Ω	200	68	37
Rated power P_{DB} (continuous braking power)	kW	0.0375	0.11	0.2
Peak power P_{max} (load duration t_a = 12 s with period t = 240 s)	kW	0.75	2.2	4
Power connection		Cable	Cable	Cable
Thermostatic switch		Integrated	Integrated	Integrated
Degree of protection		IP20	IP20	IP20
Dimensions				
• Width	mm (in)	60 (2.36)	60 (2.36)	60 (2.36)
• Height	mm (in)	167 (6.57)	270 (10.63)	337 (13.27)
• Depth	mm (in)	30 (1.18)	30 (1.18)	30 (1.18)
Net weight	kg (lb)	0.5 (1.10)	0.7 (1.54)	1.1 (2.43)
Suitable for PM240-2 Power Module standard variant	Type	6SL3210-1PB13-0 . L0 6SL3210-1PB13-8 . L0	6SL3210-1PB15-5 . L0 6SL3210-1PB17-4 . L0 6SL3210-1PB21-0 . L0	6SL3210-1PB21-4 . L0 6SL3210-1PB21-8 . L0
• Frame size		FSA	FSB	FSC

© Siemens 2022

Technical specifications (continued)

Article No.		JJY:023433720001	JJY:023422620002	JJY:023423320001	JJY:023434020003
Product designation		Braking resistor			
Line voltage 200 V … 240 V 3 AC					
Resistance	Ω	20	7.5	4.5	2.5
Rated power P_{DB} (continuous braking power)	kW	0.375	0.93	1.5	2.75
Peak power P_{max} (load duration t_a = 12 s with period t = 240 s)	kW	7.5	18.5	30	55
Power connection		Cable	Cable	Cable	Cable
Thermostatic switch		Integrated	Integrated	Integrated	Integrated
Degree of protection		IP20	IP21	IP21	IP21
Dimensions					
• Width	mm (in)	337 (13.27)	220 (8.66)	220 (8.66)	350 (13.78)
• Height	mm (in)	120 (4.72)	470 (18.5)	560 (22.05)	630 (24.8)
• Depth	mm (in)	30 (1.18)	180 (7.09)	180 (7.09)	180 (7.09)
Net weight	kg (lb)	2 (4.41)	7 (15.4)	8.5 (18.7)	13.5 (29.8)
Suitable for Power Module PM240-2	Type	6SL3210-1PC22-2 . L0 6SL3210-1PC22-8 . L0	6SL3210-1PC24-2UL0 6SL3210-1PC25-4UL0 6SL3210-1PC26-8UL0	6SL3210-1PC28-0UL0 6SL3210-1PC31-1UL0	6SL3210-1PC31-3UL0 6SL3210-1PC31-6UL0 6SL3210-1PC31-8UL0
• Frame size		FSC	FSD	FSE	FSF

Article No.		6SL3201-0BE14-3AA0	6SL3201-0BE21-0AA0	6SL3201-0BE21-8AA0	6SL3201-0BE23-8AA0
Product designation		Braking resistor			
Line voltage 380 ... 480 V 3 AC					
Resistance	Ω	370	140	75	30
Rated power P_{DB} (continuous braking power)	kW	0.075	0.2	0.375	0.925
Peak power P_{max} (load duration t_a = 12 s with period t = 240 s)	kW	1.5	4	7.5	18.5
Power connection		Terminal block	Terminal block	Terminal block	Terminal block
• Conductor cross-section	mm^2	2.5	2.5	4	6
Thermostatic switch		NC contact	NC contact	NC contact	NC contact
• Contact load, max.		250 V AC/2.5 A	250 V AC/2.5 A	250 V AC/2.5 A	250 V AC/2.5 A
• Conductor cross-section	mm^2	2.5	2.5	2.5	2.5
PE connection					
• Via terminal block		Yes	Yes	Yes	Yes
• PE connection on housing		M4 screw	M4 screw	M4 screw	M4 screw
Degree of protection		IP20	IP20	IP20	IP20
Dimensions					
• Width	mm (in)	105 (4.13)	105 (4.13)	175 (6.89)	250 (9.84)
• Height	mm (in)	295 (11.61)	345 (13.58)	345 (13.58)	490 (19.29)
• Depth	mm (in)	100 (3.94)	100 (3.94)	100 (3.94)	140 (5.51)
Net weight	kg (lb)	1.5 (3.31)	1.8 (3.97)	2.7 (5.95)	6.2 (13.7)
Suitable for PM240-2 Power Module standard variant 380 ... 480 V 3 AC	Type	6SL3210-1PE11-8 . L1 6SL3210-1PE12-3 . L1 6SL3210-1PE13-2 . L1 6SL3210-1PE14-3 . L1	6SL3210-1PE16-1 . L1 6SL3210-1PE18-0 . L1	6SL3210-1PE21-1 . L0 6SL3210-1PE21-4 . L0 6SL3210-1PE21-8 . L0	6SL3210-1PE22-7 . L0 6SL3210-1PE23-3 . L0
• Frame size		FSA	FSA	FSB	FSC

© Siemens 2022

Technical specifications (continued)

Article No.		JJY:023422620001	JJY:023424020001	JJY:023434020001	JJY:023454020001 [1]	JJY:023464020001 [2]
Product designation		Braking resistor				
Line voltage 380 ... 480 V 3 AC						
Resistance	Ω	25	15	10	7.1	5
Rated power P_{DB} (continuous braking power)	kW	1.1	1.85	2.75	3.85	5.5
Peak power P_{max} (load duration t_a = 12 s with period t = 240 s)	kW	22	37	55	77	110
Power connection		Cable	Cable	Cable	Cable	Cable
Thermostatic switch		Integrated	Integrated	Integrated	Integrated	Integrated
Degree of protection		IP21	IP21	IP21	IP21	IP21
Dimensions						
• Width	mm (in)	220 (8.66)	220 (8.66)	350 (13.78)	[1]	[2]
• Height	mm (in)	470 (18.50)	610 (24.02)	630 (24.80)	[1]	[2]
• Depth	mm (in)	180 (7.09)	180 (7.09)	180 (7.09)	[1]	[2]
Net weight	kg (lb)	7 (15.4)	9.5 (20.9)	13.5 (29.8)	20.5 (45.2)	27 (59.5)
Suitable for PM240-2 Power Module	Type	6SL3210-1PE23-8 . L0 6SL3210-1PE24-5 . L0	6SL3210-1PE26-0 . L0 6SL3210-1PE27-5 . L0	6SL3210-1PE28-8 . L0 6SL3210-1PE31-1 . L0	6SL3210-1PE31-5 . L0 6SL3210-1PE31-8 . L0	6SL3210-1PE32-1 . L0 6SL3210-1PE32-5 . L0
• Frame size		FSD	FSD	FSE	FSF	FSF

Characteristic curves

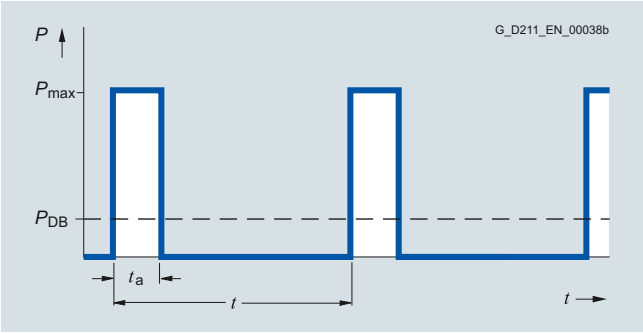

Load diagram for the braking resistors

t_a = 12 s (see section Technical specifications)
t = 240 s (see Section Technical specifications)

[1] This braking resistor consists of the two braking resistors, JJY:023422620001 and JJY:023434020001, which must be connected in parallel on the plant/system side.

[2] This braking resistor consists of two JJY:023434020001 braking resistors, which must be connected in parallel on the plant/system side.

© Siemens 2022

Selection and ordering data

Type rating		PM240-2 Power Module standard variant		Braking resistor
kW	hp	Type 6SL3210-...	Frame size	Article No.
200 ... 240 V 1 AC/3 AC				
0.55	0.75	1PB13-0 . L0	FSA	**JJY:023146720008**
0.75	1	1PB13-8 . L0		
1.1	1.5	1PB15-5 . L0	FSB	**JJY:023151720007**
1.5	2	1PB17-4 . L0		
2.2	3	1PB21-0 . L0		
3	4	1PB21-4 . L0	FSC	**JJY:023163720018**
4	5	1PB21-8 . L0		
200 ... 240 V 3 AC				
5.5	7.5	1PC22-2 . L0	FSC	**JJY:023433720001**
7.5	10	1PC22-8 . L0		
11	15	1PC24-2UL0	FSD	**JJY:023422620002**
15	20	1PC25-4UL0		
18.5	25	1PC26-8UL0		
22	30	1PC28-0UL0	FSE	**JJY:023423320001**
30	40	1PC31-1UL0		
37	50	1PC31-3UL0	FSF	**JJY:023434020003**
45	60	1PC31-6UL0		
55	75	1PC31-8UL0		
380 ... 480 V 3 AC				
0.55	0.75	1PE11-8 . L1	FSA	**6SL3201-0BE14-3AA0**
0.75	1	1PE12-3 . L1		
1.1	1.5	1PE13-2 . L1		
1.5	2	1PE14-3 . L1		
2.2	3	1PE16-1 . L1	FSA	**6SL3201-0BE21-0AA0**
3	4	1PE18-0 . L1		
4	5	1PE21-1 . L0	FSB	**6SL3201-0BE21-8AA0**
5.5	7.5	1PE21-4 . L0		
7.5	10	1PE21-8 . L0		
11	15	1PE22-7 . L0	FSC	**6SL3201-0BE23-8AA0**
15	20	1PE23-3 . L0		
18.5	25	1PE23-8 . L0	FSD	**JJY:023422620001**
22	30	1PE24-5 . L0		
30	40	1PE26-0 . L0	FSD	**JJY:023424020001**
37	50	1PE27-5 . L0		
45	60	1PE28-8 . L0	FSE	**JJY:023434020001**
55	75	1PE31-1 . L0		
75	100	1PE31-5 . L0	FSF	**JJY:023454020001**
90	125	1PE31-8 . L0		

© Siemens 2022

Overview

SINAMICS S120 Combi 4-axis Power Modules, frame types Axx and Bxx

SINAMICS S120 Combi is a very compact and rugged drive concept tailored for compact turning and milling machines. SINAMICS S120 Combi integrates a line infeed with regenerative feedback capability, power units for spindle and feed motors as well as a TTL encoder interface into a single Power Module.

The SINAMICS S120 Combi Power Modules are optimized as a drive for 3 to 6 axes in machine tools. The Power Modules are available in frame types A01 to A07 and B01 and B02 with external air cooling. SINAMICS Motor Modules in booksize compact format are used as expansion axes.

The main differences between frame types Axx and Bxx lie in the mechanical configuration, the fan design, and the connection of the expansion axes.

Benefits

- Compact multi-axis module with line infeed with regenerative feedback capability and power units for 3 or 4 axes
- Customized drive system for compact standard turning and milling machines
- Requires very little mounting space in control cabinet incl. fan unit, shield terminals and ventilation clearances
- Optimized for weak supply networks with frequent undervoltage, network imbalances and large frequency fluctuations
- Optimized for harsh operating conditions with increased cabinet temperature and increased humidity
- Rugged Power Modules resistant to short circuits, overvoltage and ground faults
- Rugged and easy-to-fit screw-type terminals with integrated shield connection for the power cables
- Perfectly designed for expansion using additional Motor Modules in booksize compact format
- Low energy consumption thanks to state-of-the-art 400-V technology
- Excellent dynamic response and machining precision thanks to Dynamic Servo Control (DSC)
- Simple cabling due to intelligent DRIVE-CLiQ interface
- Very simple commissioning thanks to predefined topologies

Function

- Power Module with 3 or 4 integrated power units
  - A01 to A03: 3 axes
  - A04 to A07, B01 and B02: 4 axes
- Integrated line infeed with regenerative feedback capability
- Integrated TTL encoder interface
- Integrated motor brake control for one axis
- Integrated fan power supply
- Line connection voltage 380 to 480 V 3 AC
- Supply types TT, TN and IT
- Integrated shield connection clamps
- Heat dissipation concept with an external heat sink for extremely low power loss in the control cabinet
- Easy-to-mount external fan module for frame types A01 to A07, no mounting effort for frame types B01 and B02 thanks to the fan integrated in the heat sink
- Increased availability thanks to fan monitoring
- Derating only from 45 °C (113 °F) cabinet temperature
- Power cables are connected by means of screw-type terminals

Integration

The following components can be connected to the SINAMICS S120 Combi drive system:

- SINUMERIK 840D sl
  - NCU 710.3B PN/NCU 720.3B/NCU 730.3B PN
  - Numeric Control Extensions NX10.3/NX15.3
- 3 or 4 spindles/feed motors
- 3 or 4 motor encoders
- 3 or 4 direct encoders via DMC20
- Direct spindle encoder directly to TTL or sin/cos via SMC20
- External fan module for frame types A01 to A07 (integrated fan for frame types B01 and B02)
- Up to 2 additional SINAMICS S120 Motor Modules in booksize compact format
  - Frame types Axx: via DC link connection and 24 V DC busbars
  - Frame types Bxx: via connection kit for expansion axes
- Braking Module with braking resistor via DC link connection
- Control Supply Module
  - Frame types Axx: via DC link connection and 24 V DC busbars
  - Frame types Bxx: via connection kit for expansion axes
- One safe motor brake control
- 5 or 6 DRIVE-CLiQ sockets
- 24 V electronics power supply via connector
- 1 safe standstill input for the infeed (Enable Pulses)
- 1 safe standstill input for the spindle and feeds (Enable Pulses)
- 1 temperature sensor input for the spindle
- PE connections

The scope of supply of the SINAMICS S120 Combi Power Modules includes:

- SINAMICS S120 Combi Power Module
- Accessories pack consisting of:
  - 3 DRIVE-CLiQ dust protection blanking plugs
  - Connector X224 for the electronics power supply
  - Connector X11 for motor brake control
  - Connector X21 Enable Pulses infeed
  - Connector X22 Enable Pulses temperature sensor - axes.
  - 5 shield terminals for power cables
  - Warning labels in 30 languages

© Siemens 2022

Selection and ordering data

SINAMICS S120 Combi Power Module						
Rated power Infeed kW	Rated output current Spindle A	Rated output current Feed 1 A	Rated output current Feed 2 A	Rated output current Feed 3 A	Article No.	Frame type
3-axis Power Module						
16	18	9	9	–	**6SL3111-3VE21-6FA2**	A01
16	24	9	9	–	**6SL3111-3VE21-6EA1**	A02
20	30	9	9	–	**6SL3111-3VE22-0HA1**	A03
4-axis Power Module						
10	24[2)]	12	12	12	**6SL3111-4VE21-0EA1**	A07
16	18	9	9	9	**6SL3111-4VE21-6FA2**	A04
16	24	9	9	9	**6SL3111-4VE21-6EA1**	A05
16	24	12	9	9	**6SL3111-4VE21-6EC1**	B01
16	24	12	9	9	**6SL3111-4VE21-6ED1**	B02
20	30	12	9	9	**6SL3111-4VE22-0HA1**	A06
Accessories						
Connection kit for expansion axes For connecting SINAMICS S120 Motor Modules in booksize compact format as expansion axes to SINAMICS S120 Combi Power Modules, frame type Bxx					**6SL3161-3PX00-0AA0**	

Technical specifications

Article No.	6SL3111-3VE2.-.... 6SL3111-4VE2.-....
Product designation	Power Module
DC link voltage[2)]	1.35 × line voltage
Output voltage	0 ... 0.7 × DC link voltage
Line power factor at rated power	
• Fundamental cos φ_1	> 0.96
• Total λ	0.64 ... 0.90
Radio interference suppression	
• Standard	No radio interference suppression
• With line filter	Category C2 according to EN 61800-3
Degree of protection	IP20
Installation altitude	Up to 1000 m (3281 ft) above sea level without derating, > 1000 ... 4000 m (3281 ... 13124 ft) with derating
Certificate of suitability	CE, cURus
Safety Integrated	Safety Integrity Level 2 (SIL 2) acc. to IEC 61508 Performance Level d (PLd) acc. to ISO 13849-1 Control Category 3 acc. to ISO 13849-1

1) Pulse frequency 4 kHz/8 kHz

2) The DC link voltage adjusts itself to the mean value of the rectified line voltage.

© Siemens 2022

Technical specifications (continued)

Article No.		6SL3111-3VE21-6FA2	6SL3111-3VE21-6EA1	6SL3111-3VE22-0HA1
Product designation		3-axis Power Module with external air cooling		
Infeed				
• Rated power P_{rated} (S1)	**kW**	**16**	**16**	**20**
• Infeed power P_{S6} (S6-40 %)	kW	21	21	26.5
• Peak infeed power P_{max}	kW	35	35	40
Regenerative feedback				
• Rated power P_{rated} (S1)	kW	16	16	20
• Peak regenerative feedback power P_{max}	kW	35	35	40
Supply voltages				
• Line voltage 3 AC	V	380 ... 480 ± 10 %	380 ... 480 ± 10 %	380 ... 480 ± 10 %
• Line frequency	Hz	45 ... 66	45 ... 66	45 ... 66
• Electronics power supply DC	V	24 (20.4 ... 28.8)	24 (20.4 ... 28.8)	24 (20.4 ... 28.8)
Rated input current				
• At 400 V 3 AC	A	28	28	34
• At 380 V 3 AC	A	29	29	35
• At 480 V 3 AC	A	25	25	30
• At 400 V 3 AC I_{S6} (40 %)	A	35.5	35.5	44
• At 400 V 3 AC peak current	A	56	56	63,5
Pulse frequency	kHz	4	4	4
Output voltage AC	V	0 ... 0.7 × DC link voltage	0 ... 0.7 × DC link voltage	0 ... 0.7 × DC link voltage
Spindle				
• Rated output current AC I_{rated}	**A**	**18**	**24**	**30**
• Intermittent-duty operating current AC I_{S6} (40 %)	A	24	32	40
• Peak current AC I_{max}	A	36	48	56
Rated power				
• At 540 V DC link voltage	kW	8.7	11.7	14.4
• At 600 V DC link voltage	kW	9.7	13	16
Feed 1/Feed 2				
• Rated output current AC I_{rated}	**A**	**9**	**9**	**9**
• Intermittent-duty operating current AC $I_{S6\text{-}40\%}$	A	12	12	12
• Peak current AC I_{rmax}	A	18	18	18
Rated power				
• At 540 V DC link voltage	kW	4.3	4.3	4.3
• At 600 V DC link voltage	kW	4.8	4.8	4.8
Output for expansion axis				
• DC link output current DC I_{rated}	A	40	40	40
• DC link voltage DC	V	460 ... 720	460 ... 720	460 ... 720
• Electronics output current for an expansion axis 24 V DC	A	20	20	20
Electronics current consumption at 24 V DC				
• Without external fan module	A	1.5	1.5	1.5
• With external fan module	A	2.3	2.3	2.3
Total power loss, incl. electronics losses	kW	0.470	0.537	0.634
• Internal	kW	0.091	0.091	0.102
• External	kW	0.379	0.446	0.532

© Siemens 2022

Technical specifications (continued)

Article No.		6SL3111-3VE21-6FA2	6SL3111-3VE21-6EA1	6SL3111-3VE22-0HA1
Product designation		3-axis Power Module with external air cooling		
Ambient temperature, max.				
• Without derating	°C (°F)	45 (113)	45 (113)	45 (113)
• With derating	°C (°F)	55 (131)	55 (131)	55 (131)
DC link voltage	V	460 ... 720	460 ... 720	460 ... 720
• Overvoltage trip DC	V	820 ± 2 %	820 ± 2 %	820 ± 2 %
• Undervoltage trip DC	V	380 ± 2 %	380 ± 2 %	380 ± 2 %
Circuit breaker (UL)				
• Type		3VL2505-2KN30-....	3VL2505-2KN30-....	3VL2506-2KN30-....
• Rated current	A	35	35	60
• Rated short-circuit current SCCR at 480 V 3 AC, resulting	kA	65	65	65
Safety fuses (UL)				
• Type		AJT35	AJT35	AJT60
• Rated current	A	35	35	60
• Rated short-circuit current SCCR, resulting				
- At 480 V 3 AC	kA	65	65	65
- At 600 V 3 AC	kA	200	200	200
Cooling air requirement	m^3/h (ft^3/h)	160 (5650)	160 (5650)	160 (5650)
Width	mm (in)	260 (10.23)	260 (10.23)	260 (10.23)
Height	mm (in)	410 (16.14)	410 (16.14)	410 (16.14)
Depth	mm (in)	304 (11.97)	304 (11.97)	304 (11.97)
Net weight	kg (lb)	18.4 (40.6)	18.4 (40.6)	18.5 (40.6)
Frame type		A01	A02	A03

© Siemens 2022

Technical specifications (continued)

Article No.		6SL3111-4VE21-0EA1	6SL3111-4VE21-6FA2	6SL3111-4VE21-6EA1	6SL3111-4VE22-0HA1
Product designation		4-axis Power Module with external air cooling			
Infeed					
• Rated power P_{rated} (S1)	**kW**	**10**	**16**	**16**	**20**
• Infeed power P_{S6} (S6-40 %)	kW	13	21	21	26.5
• Peak infeed power P_{max}	kW	35	35	35	40
Regenerative feedback					
• Rated power P_{rated} (S1)	kW	10	16	16	20
• Peak regenerative feedback power P_{max}	kW	35	35	35	40
Supply voltages					
• Line voltage 3 AC	V	380 ... 480 ± 10 %	380 ... 480 ± 10 %	380 ... 480 ± 10 %	380 ... 480 ± 10 %
• Line frequency	Hz	45 ... 66	45 ... 66	45 ... 66	45 ... 66
• Electronics power supply DC	V	24 (20.4 ... 28.8)	24 (20.4 ... 28.8)	24 (20.4 ... 28.8)	24 (20.4 ... 28.8)
Rated input current					
• At 400 V 3 AC	A	16.2	28	28	34
• At 380 V 3 AC	A	17	29	29	35
• At 480 V 3 AC	A	12.8	25	25	30
• At 400 V 3 AC I_{S6} (40 %)	A	21.1	35,.5	35.5	44
• At 400 V 3 AC peak current	A	56.7	56	56	63.5
Pulse frequency	kHz	4 (8)[1]	4	4	4
Output voltage AC	V	0 ... 0.7 × DC link voltage	0 ... 0.7 × DC link voltage	0 ... 0.7 × DC link voltage	0 ... 0.7 × DC link voltage
Spindle					
• Rated output current AC I_{rated}	**A**	**24**	**18**	**24**	**30**
• Intermittent-duty operating current AC I_{S6} (40 %)	A	32 at 4 kHz (19.2 at 8 kHz)[1]	24	32	40
• Peak current AC I_{max}	A	60	36	48	56
Rated power					
• At 540 V DC link voltage	kW	11.7	8.7	11.7	14.4
• At 600 V DC link voltage	kW	13	9.7	13	16
Feed 1					
• Rated output current AC I_{rated}	**A**	**12**	**9**	**9**	**12**
• Intermittent-duty operating current AC I_{S6} (40 %)	A	16	12	12	16
• Peak current AC I_{rmax}	A	36	18	18	24
Rated power					
• At 540 V DC link voltage	kW	5.8	4.3	4.3	5.8
• At 600 V DC link voltage	kW	6.5	4.8	4.8	6.5
Feed 2/Feed 3					
• Rated output current AC I_{rated}	**A**	**12**	**9**	**9**	**9**
• Intermittent-duty operating current AC I_{S6} (40 %)	A	16	12	12	12
• Peak current AC I_{rmax}	A	36	18	18	18
Rated power					
• At 540 V DC link voltage	kW	5.8	4.3	4.3	4.3
• At 600 V DC link voltage	kW	6.5	4.8	4.8	4.8

[1] Changeover to 8 kHz only possible for the spindle.

© Siemens 2022

Technical specifications (continued)

Article No.		6SL3111-4VE21-0EA1	6SL3111-4VE21-6FA2	6SL3111-4VE21-6EA1	6SL3111-4VE22-0HA1
Product designation		4-axis Power Module with external air cooling			
Output for expansion axis					
• DC link output current DC I_{rated}	A	18.5	40	40	40
• DC link voltage DC	V	510 ... 720	510 ... 720	510 ... 720	510 ... 720
• Electronics output current for an expansion axis 24 V DC	A	5	20	20	20
Electronics current consumption at 24 V DC					
• Without external fan module	A	1.6	1.6	1.6	1.6
• With external fan module	A	2.4	2.4	2.4	2.4
Total power loss, incl. electronics losses	kW	0.770	0.545	0.607	0.733
• Internal	kW	0.115	0.1	0.1	0.113
• External	kW	0.655	0.445	0.507	0.62
Ambient temperature, max.					
• Without derating	°C (°F)	45 (113)	45 (113)	45 (113)	45 (113)
• With derating	°C (°F)	55 (131)	55 (131)	55 (131)	55 (131)
DC link voltage	V	460 ... 720	460 ... 720	460 ... 720	460 ... 720
• Overvoltage trip DC	V	820 ± 2 %	820 ± 2 %	820 ± 2 %	820 ± 2 %
• Undervoltage trip DC	V	380 ± 2 %	380 ± 2 %	380 ± 2 %	380 ± 2 %
Circuit breaker (UL)					
• Type		3VL2505-2KN30-....	3VL2505-2KN30-....	3VL2505-2KN30-....	3VL2506-2KN30-....
• Rated current	A	50	50	50	60
• Rated short-circuit current SCCR at 480 V 3 AC, resulting	kA	65	65	65	65
Safety fuses (UL)					
• Type		AJT35	AJT35	AJT35	AJT60
• Rated current	A	35	35	35	60
• Rated short-circuit current SCCR, resulting					
- At 480 V 3 AC	kA	65	65	65	65
- At 600 V 3 AC	kA	200	200	200	200
Cooling air requirement	m^3/h (ft^3/h)	160 (5650)	160 (5650)	160 (5650)	160 (5650)
Width	mm (in)	260 (10.23)	260 (10.23)	260 (10.23)	260 (10.23)
Height	mm (in)	410 (16.14)	410 (16.14)	410 (16.14)	410 (16.14)
Depth	mm (in)	304 (11.97)	304 (11.97)	304 (11.97)	304 (11.97)
Net weight	kg (lb)	19.4 (42.8)	18.9 (41.7)	19 (42)	19 (42)
Frame type		A07	A04	A05	A06

© Siemens 2022

Technical specifications (continued)

Article No.		6SL3111-4VE21-6EC1	6SL3111-4VE21-6ED1
Product designation		4-axis Power Module with external air cooling	
Infeed			
• Rated power P_{rated} (S1)	**kW**	**16**	**16**
• Infeed power P_{S6} (40 %)	kW	21	21
• Peak infeed power P_{max}	kW	35	35
Regenerative feedback			
• Rated power P_{rated} (S1)	kW	16	16
• Peak regenerative feedback power P_{max}	kW	35	35
Supply voltages			
• Line voltage 3 AC	V	380 ... 480 ± 10 %	380 ... 480 ± 10 %
• Line frequency	Hz	45 ... 66	45 ... 66
• Electronics power supply DC	V	24 (20.4 ... 28.8)	24 (20.4 ... 28.8)
Rated input current			
• At 400 V 3 AC	A	28	28
• At 380 V 3 AC	A	29	29
• At 480 V 3 AC		25	25
• At 400 V 3 AC I_{S6} (40 %)	A	35.5	35.5
• At 400 V 3 AC peak current	A	56	56
Pulse frequency	kHz	4	4
Output voltage AC	V	0 ... 0.7 × DC link voltage	0 ... 0.7 × DC link voltage
Spindle			
• Rated output current AC I_{rated}	**A**	**24**	**24**
• Intermittent-duty operating current AC I_{S6} (40 %)	A	32	32
• Peak current AC I_{max}	A	48	48
Rated power			
• At 540 V DC link voltage	kW	11.7	11.7
• At 600 V DC link voltage	kW	13	13
Feed 1			
• Rated output current AC I_{rated}	**A**	**12**	**12**
• Intermittent-duty operating current AC I_{S6} (40 %)	A	16	16
• Peak current AC I_{max}	A	24	36
Rated power			
• At 540 V DC link voltage	kW	5.8	5.8
• At 600 V DC link voltage	kW	6.5	6.5
Feed 2/Feed 3			
• Rated output current AC I_{rated}	**A**	**9**	**9**
• Intermittent-duty operating current AC I_{S6} (40 %)	A	12	12
• Peak current AC I_{max}	A	18	27
Rated power			
• At 540 V DC link voltage	kW	4.3	4.3
• At 600 V DC link voltage	kW	4.8	4.8
Output for expansion axis			
• DC link output current DC I_{rated}	A	36	36
• DC link voltage	V	510 ... 720	510 ... 720
• Electronics output current for expansion axis 24 V DC	A	20	20

© Siemens 2022

Technical specifications (continued)

Article No.		6SL3111-4VE21-6EC1	6SL3111-4VE21-6ED1
Product designation		4-axis Power Module with external air cooling	
Electronics current consumption at 24 V DC			
• Without external fan module	A	1.6	1.6
• With external fan module	A	2.4	2.4
Total power loss, incl. electronics losses	kW	0.657	0.657
• Internal	kW	0.1	0.1
• External	kW	0.557	0.557
Ambient temperature, max.			
• Without derating	°C (°F)	45 (113)	45 (113)
• With derating	°C (°F)	55 (131)	55 (131)
DC link voltage	V	460 ... 720	460 ... 720
• Overvoltage trip DC	V	820 ± 2 %	820 ± 2 %
• Undervoltage trip DC	V	380 ± 2 %	380 ± 2 %
Circuit breaker (UL)			
• Type		3VL2505-2KN30-....	3VL2505-2KN30-....
• Rated current	A	50	50
• Rated short-circuit current SCCR at 480 V 3 AC, resulting	kA	65	65
Safety fuses (UL)			
• Type		AJT35	AJT35
• Rated current	A	35	35
• Rated short-circuit current SCCR, resulting			
- At 480 V 3 AC	kA	65	65
- At 600 V 3 AC	kA	200	200
Cooling air requirement	m^3/h (ft^3/h)	160 (5650)	160 (5650)
Width	mm (in)	260 (10.23)	260 (10.23)
Height	mm (in)	523 (20.94)	523 (20.94)
Depth	mm (in)	299 (11.77)	299 (11.77)
Net weight	kg (lb)	19.6 (43.2)	19.6 (43.2)
Frame type		B01	B02

© Siemens 2022

Overview

External fan module

External fan module

The external fan module combined with the reinforcement plates is employed to provide perfect cooling of a SINAMICS S120 Combi Power Modules, frame types A01 to A07.

To cool the SINAMICS S120 Combi Power Module, a volumetric flow of air of at least 160 m^3/h through the heat sink is required.

The external fan module supplies a maximum volumetric flow of 290 m^3/h. This dimensioning ensures an adequate air flow rate, even with a lower supply voltage or with a slightly soiled heat sink.

Due to the encapsulated electronics and the ball-bearing-mounted closed rotor, the fan module can be used even under exacting environmental conditions. The fans are equipped with electronic reverse-polarity, blocking and overload protection systems. To ensure maximum machine availability, the fan speed is monitored. A user alarm is displayed if the fan stops.

Technical specifications

Article No.	6SL3161-0EP00-0AA0
Product name	External fan module
Rated voltage DC	24 V
Voltage range DC	20.4 … 28.8 V
Volumetric flow, max.	290 m^3/h (10241 ft^3/h)
Current consumption	0.8 A
Power consumption	18 W
Ambient temperature, max.	-20 ... +70 °C (-4 ... +158 °F)
Service life	
• At 55 °C (131 °F)	50000 h
• At 70 °C (158 °F)	20000 h
Degree of protection	IP54
Height	258 mm (10.16 in)
Width	104 mm (4.09 in)
Depth	86 mm (3.39 in)
Net weight	1.5 kg (3.31 lb)
Certificate of suitability	CSA, UL, VDE

Overview

Reinforcement plates

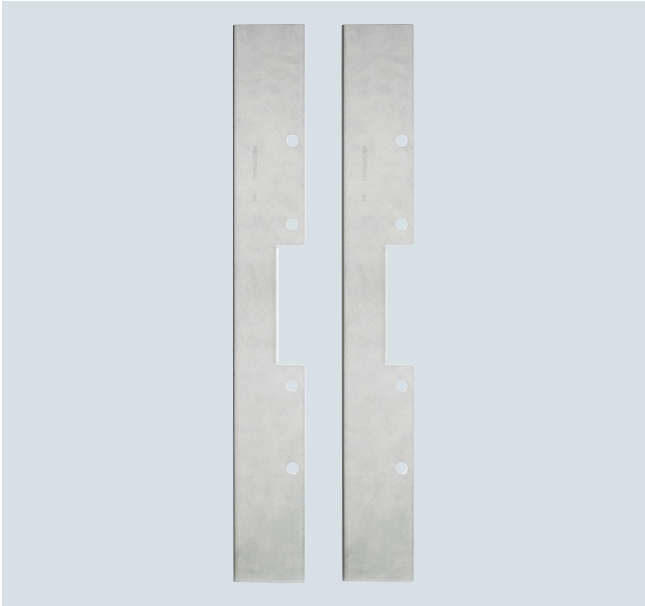

Reinforcement plates

It is essential to ensure that the air actually flows through the heat sink. The gap between the fan module and heat sink must therefore be closed. The reinforcement plates must be used for this purpose where possible.

The reinforcement plates

- close the gap between the fan module and heat sink
- reinforce the rear wall of the control cabinet for sealed installation
- guarantee ideal ventilation spaces

Technical specifications

Article No.	6SL3161-1LP00-0AA0
Product name	Reinforcement plate
Height	575 mm (22.64 in)
Width	15 mm (0.59 in)
Depth	75 mm (2.95 in)
Net weight	0.75 kg (1.65 lb)

Selection and ordering data

Description	Article No.
SINAMICS S120 Combi External fan module	**6SL3161-0EP00-0AA0**
Accessories	
SINAMICS S120 Combi Reinforcement plates (2 units)	**6SL3161-1LP00-0AA0**

© Siemens 2022

Overview

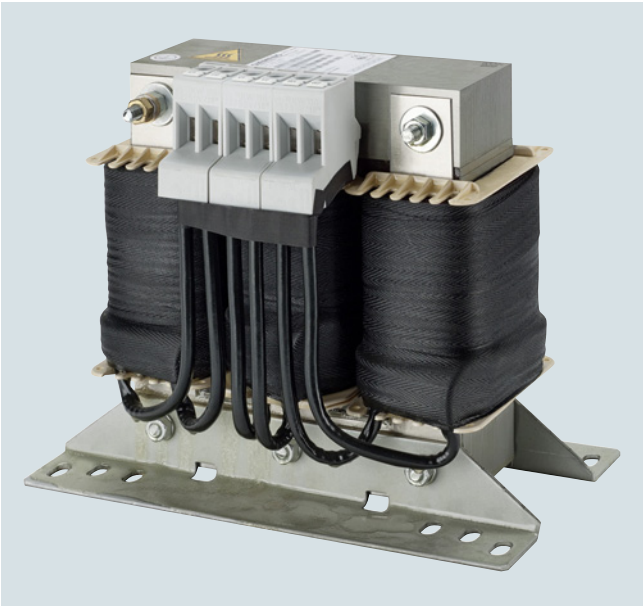

Line reactor

SINAMICS S120 Combi Power Modules cannot operate without line reactors.

The use of other makes of line reactor can lead to malfunctions or irreparable damage to equipment.

Selection and ordering data

Suitable for SINAMICS S120 Combi		**SINAMICS line reactor**	
Rated power Infeed	Power Module	Rated power	
kW	Type	kW	Article No.
16	6SL3111-3VE21-6FA2	16	**6SL3100-0EE21-6AA0**
16	6SL3111-3VE21-6EA1		
10	6SL3111-4VE21-0EA1		
16	6SL3111-4VE21-6FA2		
16	6SL3111-4VE21-6EA1		
16	6SL3111-4VE21-6EC1		
16	6SL3111-4VE21-6ED1		
20	6SL3111-3VE22-0HA1	20	**6SL3100-0EE22-0AA0**
20	6SL3111-4VE22-0HA1		

Technical specifications

Article No.		6SL3100-0EE21-6AA0	6SL3100-0EE22-0AA0
Product name		Line reactor	Line reactor
Rated power	kW	16	20
Rated current	A	28	33
Power loss	kW	0,075	0,098
Line/load connection 1U1, 1V1, 1W1/1U2, 1V2, 1W2		Screw-type terminals	Screw-type terminals
• Conductor cross-section	mm^2	4	10
PE connection		Screw-type terminals	Screw-type terminals
• Conductor cross-section	mm^2	4	10
Degree of protection		IP20	IP20
Width	mm (in)	219 (8.62)	219 (8.62)
Height	mm (in)	176 (6.93)	176 (6.93)
Depth	mm (in)	120 (4.72)	130 (5.12)
Net weight	kg (lb)	10.7 (23.6)	10.9 (24)
Certificate of suitability		cURus	cURus

© Siemens 2022

Overview

Line filter

In plants with strict EMC requirements, line filters work together with line reactors to restrict the conducted interference emanating from the Power Modules to the limit values of Class A1 as defined in EN 55011 and Category C2 as defined in EN 61800-3. Line filters are suitable only for direct connection to TN systems.

The use of other makes of line filter can lead to malfunctions or irreparable damage to equipment.

Note:

According to product standard IEC 61800-3, RFI suppression commensurate with the relevant rated conditions must be provided and is a legal requirement in the EU (EMC Directive). Line filters and line reactors are required for this purpose.

The machine manufacturer must provide verification that the machinery to be operated with the drive products and the installed suppression elements, e.g. line filters, are CE-EMC compliant.

Technical specifications

Article No.	6SL3000-0BE21-6DA0
Product name	Line filter
Rated current	36 A
Rated infeed power	10 kW, 16 kW, 20 kW
Power loss at rated operation	0.012 kW, 0.015 kW, 0.016 kW
Line/load connection L1, L2, L3/U, V, W • Conductor cross-section	Screw-type terminals 10 mm^2
PE connection	M6 screw stud
Degree of protection	IP20
Width	50 mm (1.97 in)
Height	429 mm (16.89 in)
Depth	226 mm (8.90 in)
Net weight	5 kg (11 lb)
Certificate of suitability	cURus

Selection and ordering data

Suitable for SINAMICS S120 Combi		**SINAMICS line filter**
Rated power Infeed	Power Module	
kW	Type	Article No.
16	6SL3111-3VE21-6FA2	**6SL3000-0BE21-6DA0**
16	6SL3111-3VE21-6EA1	
20	6SL3111-3VE22-0HA1	
10	6SL3111-4VE21-0EA1	
16	6SL3111-4VE21-6FA2	
16	6SL3111-4VE21-6EA1	
16	6SL3111-4VE21-6EC1	
16	6SL3111-4VE21-6ED1	
20	6SL3111-4VE21-0AH1	

© Siemens 2022

Overview

The SINAMICS S120 Combi Power Module can be extended by the SINAMICS S120 Motor Modules in booksize compact format.

Benefits

- Simple addition of supplementary machine components when using the SINAMICS S120 Combi drive system
- Expansion axes can interpolate freely with the SINAMICS S120 Combi axes
- Connection of the Motor Modules to SINAMICS S120 Combi Power Modules, frame types Axx through simple connection of the DC link busbars and 24 V busbars
- Connection of the Motor Modules to SINAMICS S120 Combi Power Modules, frame types Bxx using the connection kit for DC link and 24 V power supply
- Motor Modules are supplied via the infeed integrated in the SINAMICS S120 Combi
- Energy exchange between Motor Modules and the SINAMICS S120 Combi Power Module through a common DC link
- Simple connection to the DRIVE-CLiQ interface

Function

Connection of up to 2 SINAMICS S120 Motor Modules in booksize compact format to the integrated line infeed of the SINAMICS S120 Combi Power Modules[1)]

[1)] The simultaneity factor of the axis grouping for the infeed power of the SINAMICS S120 Combi Power Modules must be observed.

© Siemens 2022

Design

Single Motor Modules in booksize compact format

The Single Motor Modules in booksize compact format feature the following connections and interfaces as standard:

- 2 DC link connections via integrated DC link busbars
- 1 electronics power supply connection via integrated 24 V DC bars
- 3 DRIVE-CLiQ sockets
- 1 motor connection via connector
- 1 safe standstill input
- 1 safe motor brake control
- 1 temperature sensor input for KTY84-130, Pt1000 or PTC (Pt1000 can be used from firmware V4.7 HF17)
- 2 PE (protective earth) connections

The status of the Motor Modules is indicated via two multi-color LEDs.

The shield of the motor cable is routed over the connector to the motor connection.

The signal cable shield can be connected to the Motor Module by means of a shield connection clamp, e.g. Weidmüller type KLBÜ 3-8 SC.

The scope of supply of the Motor Modules includes:

- DRIVE-CLiQ cable appropriate to the width of the Motor Module for connection to the adjacent Motor Module, length 0.11 m (4.33 in) for Motor Modules with a width of 50 mm (1.97 in) or length 0.16 m (6.3 in) for Motor Modules with a width of 75 mm (2.95 in).
- 2 dust protection blanking plugs for sealing unused DRIVE-CLiQ sockets
- Jumper for connecting the 24 V DC busbar to the adjacent Motor Module
- Connector X21
- Connector X11 for motor brake connection
- Connector X1 for motor connection
- 1 set of warning labels in 30 languages

Integration

The Single Motor Module receives its control information via DRIVE-CLiQ from:

- CU320-2 Control Unit
- SINUMERIK 840D sl with
  - NCU 710.3B PN
  - NCU 720.3B PN
  - NCU 730.3B PN
  - Numeric Control Extensions NX10.3/NX15.3

Technical specifications

Article No.	6SL3420-1TE...
Product designation	Single Motor Module in booksize compact format
DC link voltage (up to 2000 m (6562 ft) above sea level)	510 ... 720 V DC (line voltage 380 ... 480 V 3 AC)
Electronics power supply	24 V DC -15 %/+20 %
Type of cooling	Internal air cooling (power units with increased air cooling by built-in fan)
Permissible ambient and coolant temperature (air) during operation for line-side components, Line Modules and Motor Modules	0 ... 40 °C (32 ... 104 °F) without derating, > 40 ... 55 °C (104 ... 131 °F), see derating characteristics
Installation altitude	Up to 1000 m (3281 ft) above sea level without derating, > 1000 ... 4000 m (3281 ... 13124 ft) above sea level, see derating characteristics
Declarations of conformity	CE (Low Voltage and EMC Directives)
Certificate of suitability	UL-recognized
Safety Integrated	Safety Integrity Level 2 (SIL 2) acc. to IEC 61508, Performance Level d (PL d) acc. to ISO 13849-1 and Control Category 3 acc. to ISO 13849-1 or EN 954-1

© Siemens 2022

Technical specifications (continued)

Article No.		6SL3420-1TE13-0AA1	6SL3420-1TE15-0AA1	6SL3420-1TE21-0AA1	6SL3420-1TE21-8AA1
Product designation		Single Motor Module in booksize compact format with internal air cooling			
DC link voltage 510 ... 720 V DC					
Output current					
• Rated current I_{rated}	A	3	5	9	18
• Base-load current I_H	A	2.6	4.3	7.7	15.3
• For S6 duty (40 %) I_{S6}	A	3.5	6	10	24
• I_{max}	A	9	15	27	54
Type rating [1]					
• Based on I_{rated}	kW (hp)	1.6 (1.5)	2.7 (3)	4.8 (5)	9.7 (10)
• Based on I_H	kW (hp)	1.4 (1)	2.3 (2.5)	4.1 (5)	8.2 (10)
Rated pulse frequency	kHz	8	8	4	4
DC link current I_d [2]	A	3.6	6	11	22
Current carrying capacity					
• DC link busbars	A	100	100	100	100
• 24 V DC busbars [3]	A	20	20	20	20
DC link capacitance	µF	110	110	110	235
Current requirement At 24 V DC, max.	A	0.85	0.85	0.85	0.85
Power loss	kW	0.07	0.1	0.1	0.18
Cooling air requirement	m^3/s (ft^3/s)	0.008 (0.3)	0.008 (0.3)	0.008 (0.3)	0.008 (0.3)
Sound pressure level L_{pA} (1 m/3.28 ft)	dB	<60	<60	<60	<60
Motor connection U2, V2, W2		Connector (X1) with screw-type terminals	Connector (X1) with screw-type terminals	Connector (X1) with screw-type terminals	Connector (X1) with screw-type terminals
• Conductor cross-section	mm^2	0.2 ... 6	0.2 ... 6	0.2 ... 6	0.2 ... 6
Shield connection		Integrated in connector (X1)	Integrated in connector (X1)	Integrated in connector (X1)	Integrated in connector (X1)
PE connection		M5 screw	M5 screw	M5 screw	M5 screw
Motor brake connection		Connector (X11), 24 V DC, 2 A	Connector (X11), 24 V DC, 2 A	Connector (X11), 24 V DC, 2 A	Connector (X11), 24 V DC, 2 A
Motor cable length, max.					
• Shielded	m (ft)	50 (164)	50 (164)	50 (164)	70 (230)
• Unshielded	m (ft)	75 (246)	75 (246)	75 (246)	100 (328)
Degree of protection		IP20	IP20	IP20	IP20
Dimensions					
• Width	mm (in)	50 (1.97)	50 (1.97)	50 (1.97)	75 (2.95)
• Height	mm (in)	270 (10.63)	270 (10.63)	270 (10.63)	270 (10.63)
• Depth	mm (in)	226 (8.90)	226 (8.90)	226 (8.90)	226 (8.90)
Net weight	kg (lb)	2.7 (5.95)	2.7 (5.95)	2.7 (5.95)	3.4 (7.50)

[1] Rated power of a typical standard asynchronous (induction) motor at 600 V DC link voltage.

[2] Rated DC link current for dimensioning an external DC connection.

[3] If, due to a number of Line Modules and Motor Modules being mounted side-by-side, the current carrying capacity exceeds 20 A, an additional 24 V DC connection using a 24 V terminal adapter is required (max. cross-section 6 mm^2, max. fuse protection 20 A).

[4] Power loss of Motor Module at rated power including losses of 24 V DC electronics power supply.

© Siemens 2022

Selection and ordering data

Single Motor Module in booksize compact format		
Rated output current A	Type rating [1] kW (hp)	Article No.
DC link voltage 510 ... 720 V DC		
3	1.6 (1.5)	**6SL3420-1TE13-0AA1**
5	2.7 (3)	**6SL3420-1TE15-0AA1**
9	4.8 (5)	**6SL3420-1TE21-0AA1**
18	9.7 (10)	**6SL3420-1TE21-8AA1**

Description	Article No.
Accessories	
DC link rectifier adapter For direct infeed of DC link voltage Screw-type terminals 0.5 ... 10 mm² For Line Modules and Motor Modules in booksize format with a width of 50 mm (1.97 in), 75 mm (2.95 in) and 100 mm (3.94 in)	**6SL3162-2BD00-0AA0**
DC link adapter (2 units) For multi-tier configuration Screw-type terminals 35 ... 95 mm² For all Line Modules and Motor Modules in booksize format	**6SL3162-2BM01-0AA0**
24 V terminal adapter For all Line Modules and Motor Modules in booksize format	**6SL3162-2AA00-0AA0**

Description	Article No.
Accessories (continued)	
Spacing bolt (4 units) The mounting depth of modules in booksize compact format is increased when it is mounted on these spacing bolts by such an amount that it can be integrated into a drive line-up in booksize format. 2 spacing bolts are required to mount 50 mm (1.97 in) wide modules, and 4 spacing bolts for 75 mm (2.95 in) wide modules.	**6SL3462-1CC00-0AA0**
Accessories for re-ordering	
24 V jumper For connection of the 24 V busbars (for booksize format)	**6SL3162-2AA01-0AA0**
Warning labels in 30 languages This label set can be glued over the standard English or German labels to provide warnings in other languages. One set of labels is supplied with the devices. One sign in each of the following languages is provided in each set: BG, CN, CZ, DE, DK, EE, ES, FI, FR, GB, GR, HU, IE, IS, IT, JP, KR, LT, LV, MT, NL, NO, PL, PT, RO, RU, SE, SI, SK, TR	**6SL3166-3AB00-0AA0**
Dust protection blanking plugs (50 units) For DRIVE-CLiQ port	**6SL3066-4CA00-0AA0**

Characteristic curves

Overload capability

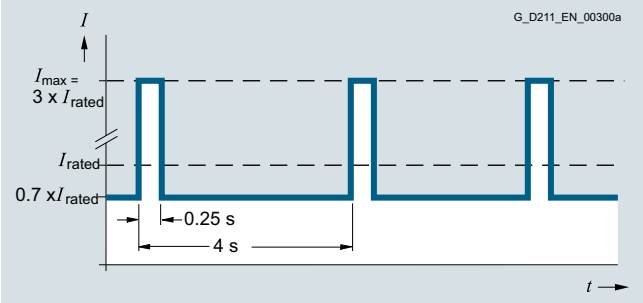

Peak current duty cycle with previous load (300 % overload)

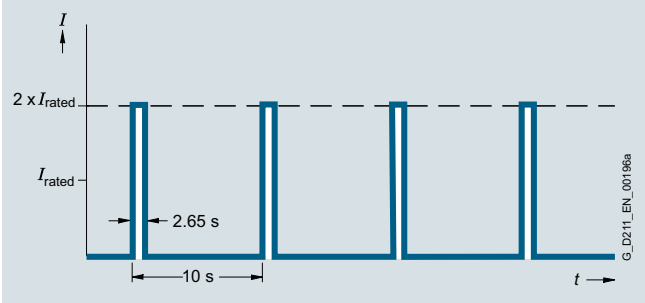

Duty cycle without previous load

Note:
I_{max} stands for 2 × I_{rated} in the following overload characteristics.

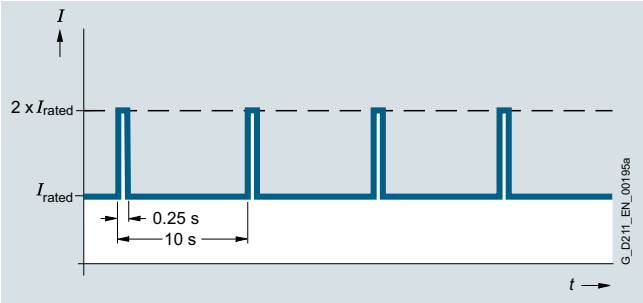

Duty cycle with previous load

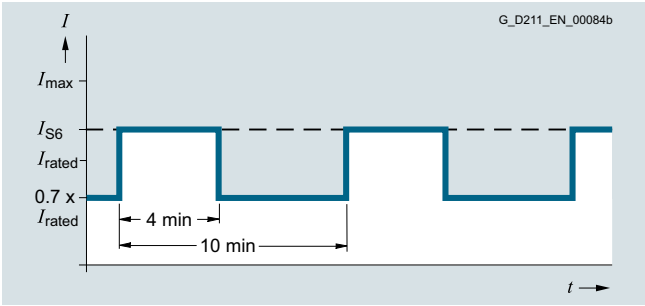

S6 duty cycle with previous load with a duty cycle duration of 600 s

[1] Nominal hp ratings based on asynchronous (induction) motors. Match the motor nameplate current for specific sizing.

© Siemens 2022

Characteristic curves (continued)

Overload capability *(continued)*

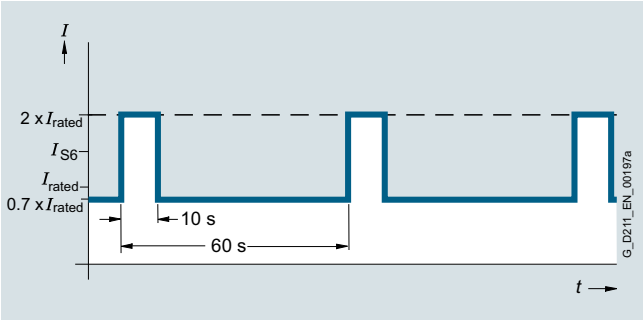

S6 duty cycle with previous load with a duty cycle duration of 60 s

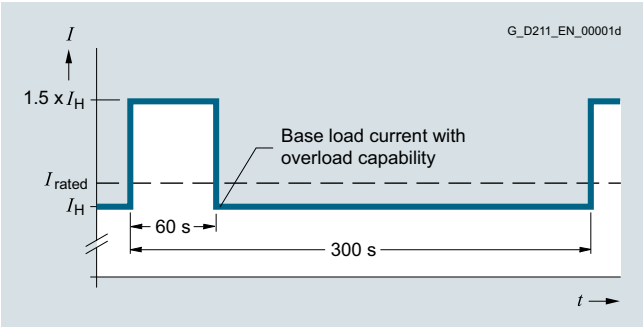

Duty cycle with 60 s overload with a duty cycle duration of 300 s

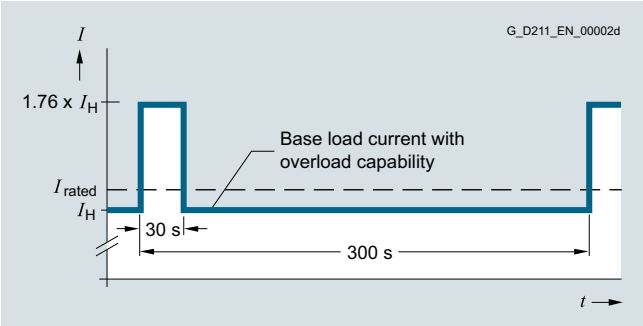

Duty cycle with 30 s overload with a duty cycle duration of 300 s

Derating characteristics

3 A and 5 A Single Motor Modules in booksize compact format

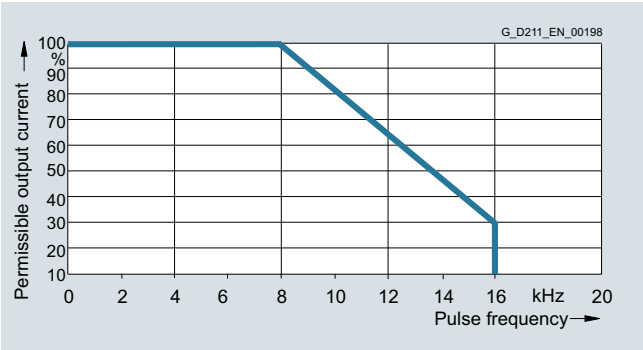

Output current as a function of pulse frequency

Derating characteristics *(continued)*

9 A and 18 A Single Motor Modules in booksize compact format

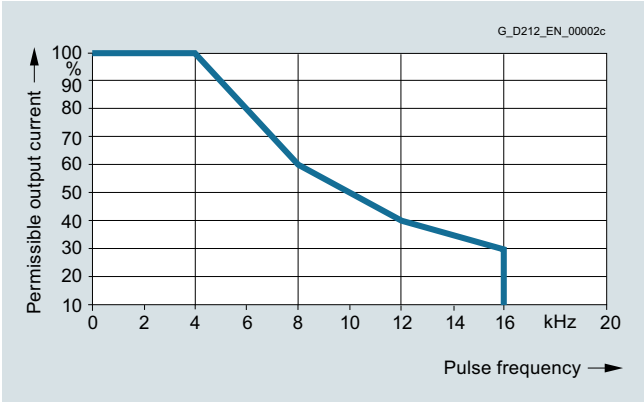

Output current as a function of pulse frequency

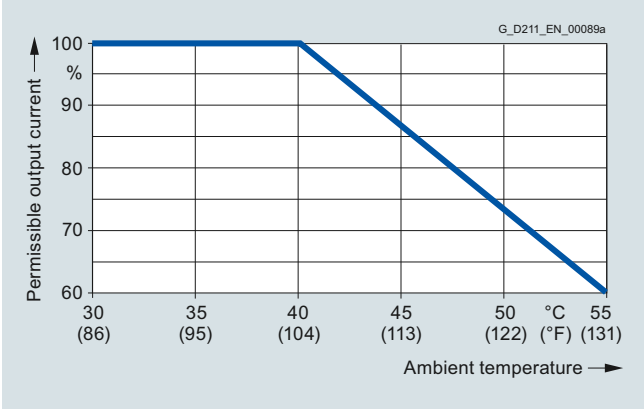

Output current as a function of ambient temperature

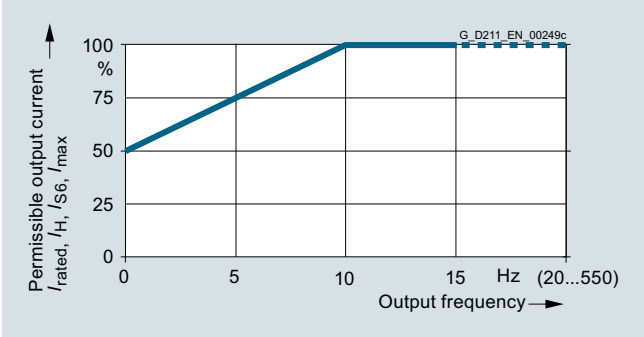

Output current as a function of output frequency

Installation altitude

- >1000 ... 4000 m (3281 ... 13124 ft) above sea level
  - Reduction of the output current by 10 % per 1000 m (3281 ft), or
  - Reduction of the ambient temperature by 5 °C (9 °F) per 1000 m (3281 ft)
- >2000 ... 4000 m (6562 ... 13124 ft) above sea level
  - Operation on line supply systems with grounded neutral point, or
  - Operation with an isolating transformer with secondary grounded neutral point

© Siemens 2022

Design

Double Motor Module in booksize compact format

Double Motor Modules feature the following connections and interfaces as standard:

- 2 DC link connections via integrated DC link busbars
- 2 electronics power supply connections via integrated 24 V DC busbars
- 4 DRIVE-CLiQ sockets
- 2 motor connections via connector
- 2 safe standstill inputs (1 input per axis)
- 2 safe motor brake controls
- 2 temperature sensor inputs for KTY84-130, Pt1000 or PTC (Pt1000 can be used from firmware V4.7 HF17)
- 3 PE (protective earth) connections

The status of the Motor Modules is indicated via two multi-color LEDs.

The shield of the motor cables is routed over the connectors to the motor connection.

The signal cable shield can be connected to the Motor Module by means of a shield connection clamp, e.g. Weidmüller type KLBÜ 3-8 SC.

The scope of supply of the Motor Modules includes:

- DRIVE-CLiQ cable for connecting to the adjacent Motor Module, length 0.16 m (6.3 in)
- 2 blanking plugs for sealing unused DRIVE-CLiQ sockets
- Jumper for connecting the 24 V DC busbar to the adjacent Motor Module
- Connectors X21 and X22
- Connectors X1 and X2 for motor connection
- 1 set of warning labels in 30 languages

Integration

The Double Motor Module receives its control information via DRIVE-CLiQ from:

- CU320-2 Control Unit
- SINUMERIK 840D sl with
  - NCU 710.3B PN
  - NCU 720.3B PN
  - NCU 730.3B PN
  - Numeric Control Extensions NX10.3/NX15.3

Technical specifications

Article No.	6SL3420-2TE1...
Product designation	Double Motor Module in booksize compact format
DC link voltage (up to 2000 m (6562 ft) above sea level)	510 ... 720 V DC (line voltage 380 ... 480 V 3 AC)
Electronics power supply	24 V DC -15 %/+20 %
Type of cooling	Internal air cooling (power units with increased air cooling by built-in fan)
Permissible ambient and coolant temperature (air) during operation for line-side components, Line Modules and Motor Modules	0 ... 40 °C (32 ... 104 °F) without derating, > 40 ... 55 °C (104 ... 131 °F), see derating characteristics
Installation altitude	Up to 1000 m (3281 ft) above sea level without derating, > 1000 ... 4000 m (3281 ... 13124 ft) above sea level, see derating characteristics
Declarations of conformity	CE (Low Voltage and EMC Directives)
Certificate of suitability	cURus
Safety Integrated	Safety Integrity Level 2 (SIL 2) acc. to IEC 61508, Performance Level d (PL d) acc. to ISO 13849-1 and Control Category 3 acc. to ISO 13849-1 or EN 954-1

© Siemens 2022

Technical specifications (continued)

Article No.		6SL3420-2TE11-7AA1	6SL3420-2TE13-0AA1	6SL3420-2TE15-0AA1
Product designation		Double Motor Module in booksize compact format with internal air cooling		
DC link voltage 510 ... 720 V DC				
Output current				
• Rated current I_{rated}	A	2 × 1.7	2 × 3	2 × 5
• For S6 duty (40 %) I_{S6}	A	2 × 2	2 × 3.5	2 × 6
• Base-load current I_H	A	2 × 1.5	2 × 2.6	2 × 4.3
• I_{max}	A	2 × 5.1	2 × 9	2 × 15
Type rating [1]				
• Based on I_{rated}	kW (hp)	2 × 0.9 (0.75)	2 × 1.6 (1.5)	2 × 2.7 (3)
• Based on I_H	kW (hp)	2 × 0.8 (0.5)	2 × 1.4 (1)	2 × 2.3 (2.5)
Rated pulse frequency	kHz	8	8	8
DC link current I_d [2]	A	4.1	7.2	12
Current carrying capacity				
• DC link busbars	A	100	100	100
• 24 V DC busbars [3]	A	20	20	20
DC link capacitance	µF	165	165	165
Current requirement At 24 V DC, max.	A	1	1	1
Power loss [4]	kW	0.11	0.13	0.19
Cooling air requirement	m^3/s (ft^3/s)	0.008 (0.3)	0.008 (0.3)	0.008 (0.3)
Sound pressure level L_{pA} (1 m)	dB	<60	<60	<60
Motor connection U2, V2, W2		2 connectors (X1, X2) with screw-type terminals	2 connectors (X1, X2) with screw-type terminals	2 connectors (X1, X2) with screw-type terminals
• Conductor cross-section	mm^2	0.2 ... 6	0.2 ... 6	0.2 ... 6
Shield connection		Integrated in connector (X1, X2)	Integrated in connector (X1, X2)	Integrated in connector (X1, X2)
PE connection		M5 screw	M5 screw	M5 screw
Motor brake connection		Connector (X11, X12), 24 V DC, 2 A	Connector (X11, X12), 24 V DC, 2 A	Connector (X11, X12), 24 V DC, 2 A
Motor cable length, max.				
• Shielded	m (ft)	50 (164)	50 (164)	50 (164)
• Unshielded	m (ft)	75 (246)	75 (246)	75 (246)
Degree of protection		IP20	IP20	IP20
Dimensions				
• Width	mm (in)	75 (2.95)	75 (2.95)	75 (2.95)
• Height	mm (in)	270 (10.63)	270 (10.63)	270 (10.63)
• Depth	mm (in)	226 (8.90)	226 (8.90)	226 (8.90)
Net weight	kg (lb)	3.4 (7.50)	3.4 (7.50)	3.4 (7.50)

[1] Rated power of a typical standard asynchronous (induction) motor at 600 V DC link voltage.

[2] Rated DC link current for dimensioning an external DC connection.

[3] If, due to a number of Line Modules and Motor Modules being mounted side-by-side, the current carrying capacity exceeds 20 A, an additional 24 V DC connection using a 24 V terminal adapter is required (max. cross-section 6 mm^2, max. fuse protection 20 A).

[4] Power loss of Motor Module at rated power including losses of 24 V DC electronics power supply.

© Siemens 2022

Selection and ordering data

Double Motor Module in booksize compact format		
Rated output current A	Type rating [1] kW (hp)	Article No.
DC link voltage 510 ... 720 V DC		
2 × 1.7 A	2 × 0.9 kW (2 × 0.75 hp)	**6SL3420-2TE11-7AA1**
2 × 3 A	2 × 1.6 kW (2 × 1.5 hp)	**6SL3420-2TE13-0AA1**
2 × 5 A	2 × 2.7 kW (2 × 3 hp)	**6SL3420-2TE15-0AA1**

Description	Article No.
Accessories	
DC link rectifier adapter For direct infeed of DC link voltage Screw-type terminals 0.5 ... 10 mm² For Line Modules and Motor Modules in booksize format with a width of 50 mm (1.97 in), 75 mm (2.95 in) and 100 mm (3.94 in)	**6SL3162-2BD00-0AA0**
DC link adapter (2 units) For multi-tier configuration Screw-type terminals 35 ... 95 mm² For all Line Modules and Motor Modules in booksize format	**6SL3162-2BM01-0AA0**
24 V terminal adapter For all Line Modules and Motor Modules in booksize format	**6SL3162-2AA00-0AA0**

Description	Article No.
Accessories (continued)	
Spacing bolt (4 units) The mounting depth of modules in booksize compact format is increased when it is mounted on these spacing bolts by such an amount that it can be integrated into a drive line-up in booksize format. 2 spacing bolts are required to mount 50 mm (1.97 in) wide modules, and 4 spacing bolts for 75 mm (2.95 in) wide modules.	**6SL3462-1CC00-0AA0**
Accessories for re-ordering	
24 V jumper For connection of the 24 V busbars (for booksize format)	**6SL3162-2AA01-0AA0**
Warning labels in 30 languages This label set can be glued over the standard English or German labels to provide warnings in other languages. One set of labels is supplied with the devices. One sign in each of the following languages is provided in each set: BG, CN, CZ, DE, DK, EE, ES, FI, FR, GB, GR, HU, IE, IS, IT, JP, KR, LT, LV, MT, NL, NO, PL, PT, RO, RU, SE, SI, SK, TR	**6SL3166-3AB00-0AA0**
Dust protection blanking plugs (50 units) For DRIVE-CLiQ port	**6SL3066-4CA00-0AA0**

Characteristic curves

Overload capability

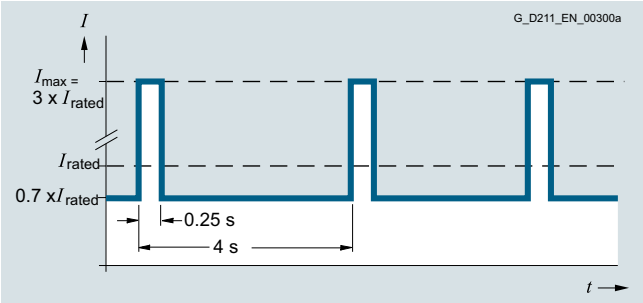

Peak current duty cycle with previous load (300 % overload)

Note:
I_{max} stands for 2 × I_{rated} in the following overload characteristics.

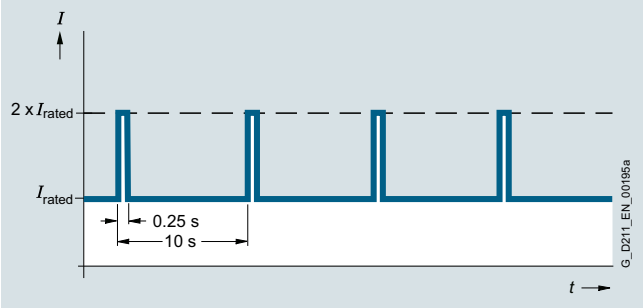

Duty cycle with previous load

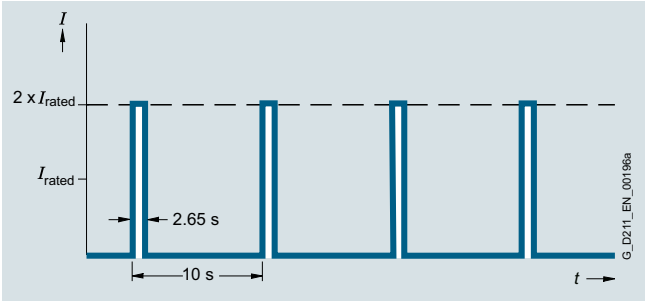

Duty cycle without previous load

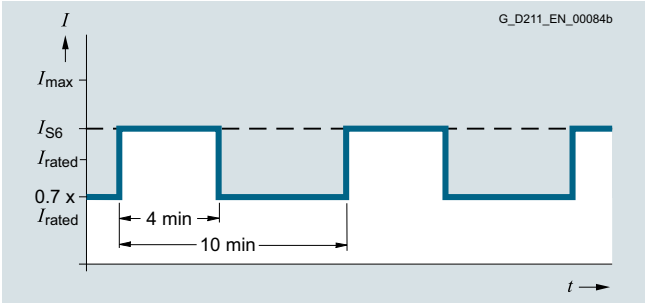

S6 duty cycle with previous load with a duty cycle duration of 600 s

[1] Nominal hp ratings based on asynchronous (induction) motors. Match the motor nameplate current for specific sizing.

© Siemens 2022

Characteristic curves (continued)

Overload capability (continued)

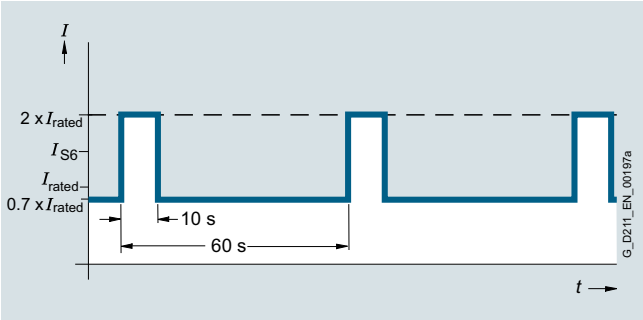

S6 duty cycle with previous load with a duty cycle duration of 60 s

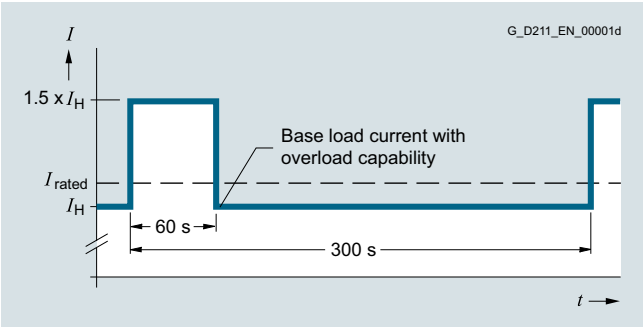

Duty cycle with 60 s overload with a duty cycle duration of 300 s

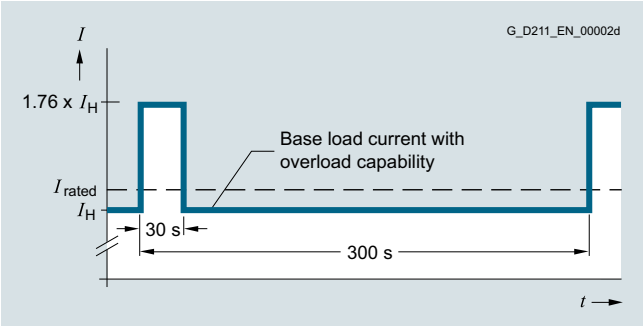

Duty cycle with 30 s overload with a duty cycle duration of 300 s

Derating characteristics

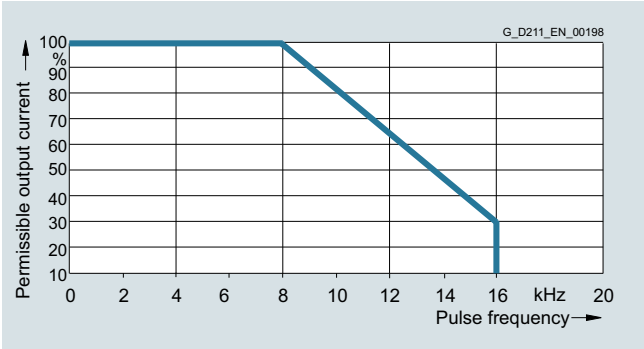

Output current as a function of pulse frequency

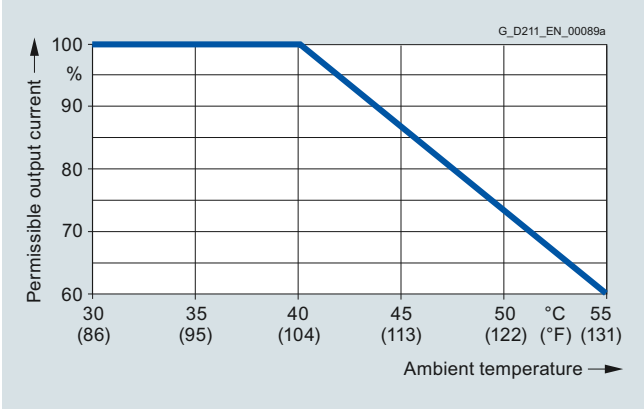

Output current as a function of ambient temperature

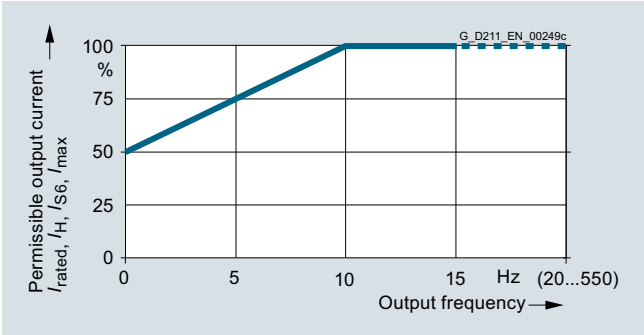

Current derating as a function of output frequency

Installation altitude

- >1000 ... 4000 m (3281 ... 13124 ft) above sea level
  - Reduction of the output current by 10 % per 1000 m (3281 ft), or
  - Reduction of the ambient temperature by 5 °C (9 °F) per 1000 m (3281 ft)
- >2000 ... 4000 m (6562 ... 13124 ft) above sea level
  - Operation on line supply systems with grounded neutral point, or
  - Operation with an isolating transformer with secondary grounded neutral point

© Siemens 2022

Overview

SINAMICS S120M

SINAMICS S120M is the distributed version of the modular SINAMICS S120 drive system. This drive is a compact and turnkey drive unit that comprises

- AM600 Adapter Module for supplying the distributed drive unit
- Distributed drive unit (synchronous servomotor with integrated power unit and encoder)
- Hybrid cable for power and communication

The power unit is not integrated in the control cabinet, as is normally the case, but in the motor for the driven axis. This brings advantages and freedoms for existing or new machine concepts.

Benefits

- Reduced heat losses in the control cabinet thanks to distributed configuration
- Reduced air conditioning in the control cabinet thanks to the power unit integrated into the motor
- Reduced control cabinet volume thanks to the power unit integrated into the motor
- Increased degree of flexibility for modernizations/retrofits thanks to specified control cabinet sizes
- Less time spent on cabling, because the pre-assembled hybrid cable contains all signal and power cables
- Reduction in overall cable length, because the pre-assembled hybrid cable contains all signal and power cables
- Up to 12 distributed drive units can be operated on one AM600 Adapter Module, depending on their power ratings
- Any number of AM600 Adapter Modules can be operated on one appropriately dimensioned infeed
- Drive-integrated DI/DOs for easy adaptation to the machine environment
- All safety variants and communication variants of the SINAMICS S120 system are also available in SINAMICS S120M
- Optimum integration into the SIMOTION and SINUMERIK system landscape

Application

Typical SINAMICS S120M applications include the packaging, printing, glass and textile industries.

Design

The SINAMICS S120M distributed drive system comprises the following units:

- AM600 Adapter Module
- Distributed drive unit (1FK7 synchronous servomotor with integrated Motor Module and multi-turn absolute encoder)
- MOTION-CONNECT hybrid cable
  Additional information on cables is provided in Section MOTION-CONNECT connection systems.
- DRIVE-CLiQ Extension (necessary with more than 6 distributed drive units)
- Hybrid Cabinet Bushing, optional
- Terminating connector (essential for achieving the degree of protection; included in scope of supply of AM600 Adapter Module)

© Siemens 2022

Function

- The 24 V electronics power supply is either provided from an external supply or from a Control Supply Module (CSM). The supply can also be taken from the central drive line-up using the 24 V terminal connector
- Use of Line Modules (Active Line Module, Basic Line Module and Smart Line Module) from the SINAMICS S120 product family
- The AM600 Adapter Module opens a line of distributed drive units. It feeds the DC link, auxiliary voltage, and DRIVE-CLiQ in a hybrid cable.
- If several drive units are to be operated, then the possible number depends on the central Control Unit. If an additional Control Unit is used, the closed-loop control signals are fed into the DRIVE-CLiQ line via a DRIVE-CLiQ Extension
- AM600 Adapter Module, DRIVE-CLiQ Extension and Hybrid Cabinet Bushing are not "visible" DRIVE-CLiQ nodes in the topology. The number of DRIVE-CLiQ Extensions is not restricted.
- As Control Unit or control, all multi-axis Control Units in the SINAMICS/SIMOTION/SINUMERIK range can generally be used (CU320-2, D4xx-2, CX32-2, NCUxx). The releases of SINAMICS S120M for the corresponding systems are published via the Siemens Industry Online Support Portal: https://support.industry.siemens.com

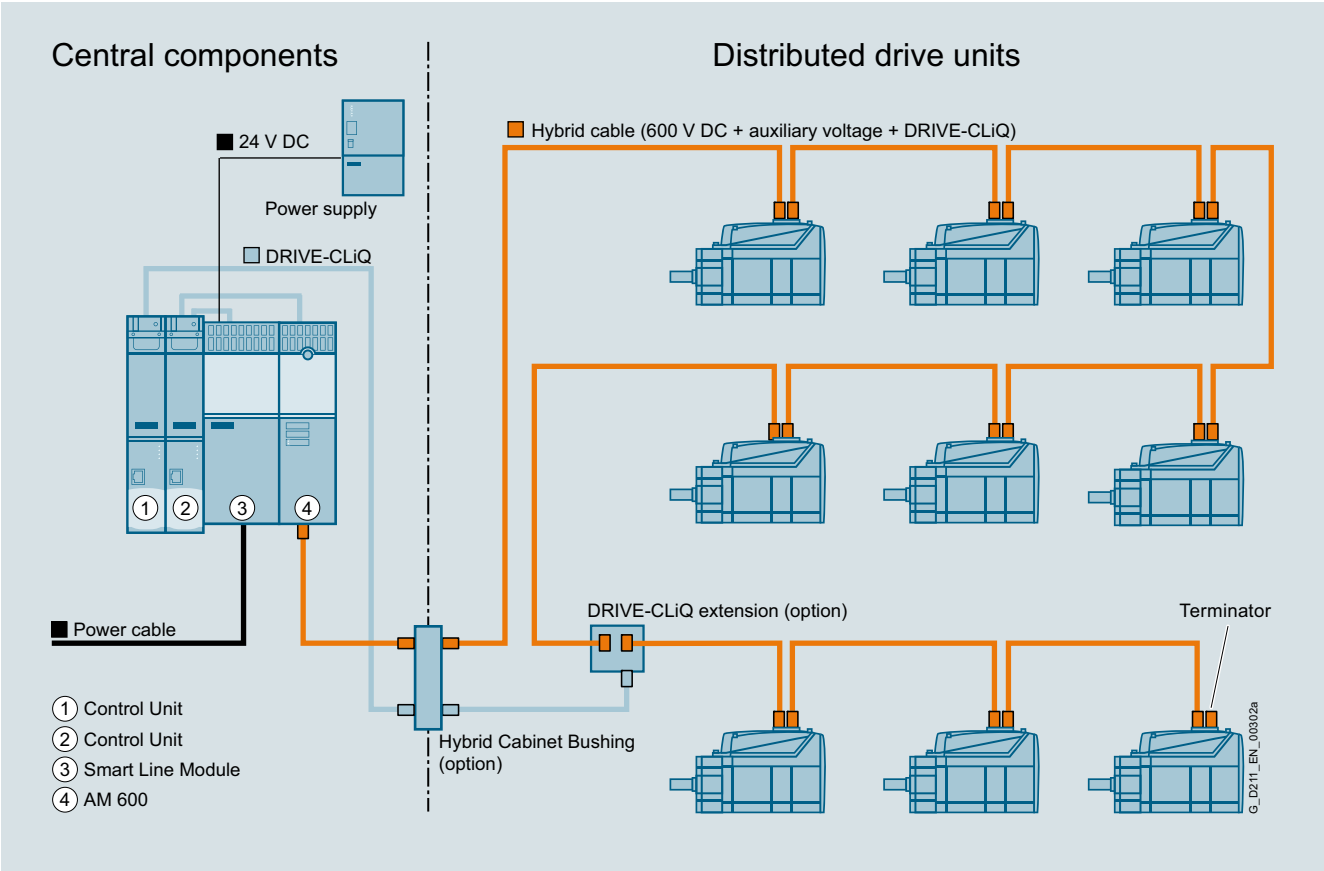

Principle of a SINAMICS S120M topology

© Siemens 2022

Integration

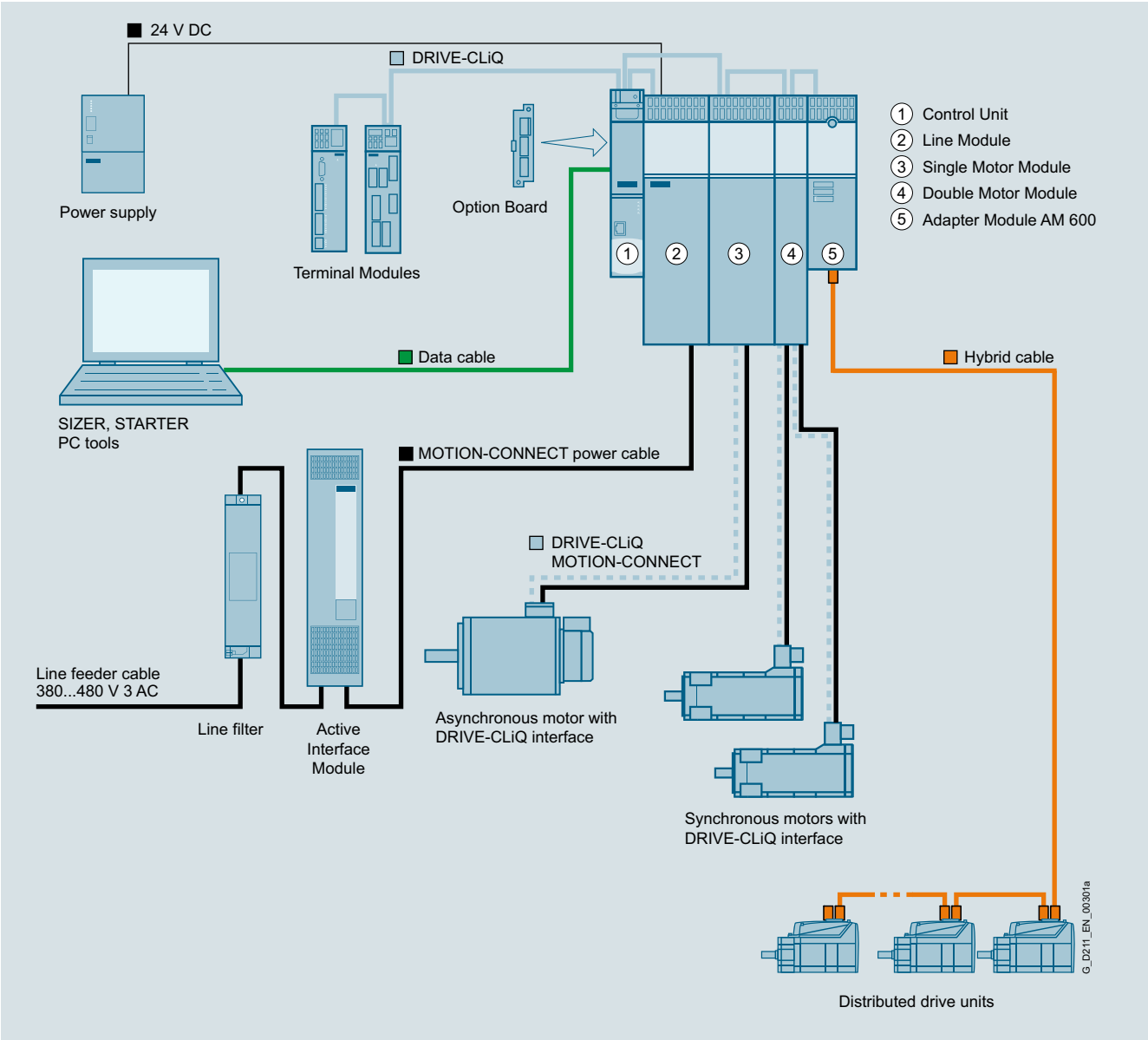

Integration of SINAMICS S120M into the SINAMICS S120 drive system

Modular system for complex drive tasks

SINAMICS S120 solves complex drive tasks for a very wide range of industrial applications and is, therefore, designed as a modular system. Users can choose from many different harmonized components and functions to create a solution that best meets their requirements.

The powerful SIZER for Siemens Drives configuration tool makes it easier to choose and determine the optimum drive configuration.

SINAMICS S120 optimally supports:

- Synchronous and asynchronous motors
- Linear and torque motors
- SINAMICS S120M

System architecture with a central Control Unit:

On the SINAMICS S120, the drive intelligence is combined with closed-loop control functions into Control Units. These units are capable of controlling drives in the vector, servo and V/f modes. They also perform the speed and torque control functions plus other intelligent drive functions for all axes on the drive. Inter-axis connections can be established within a component and easily configured in the STARTER commissioning tool using a mouse.

© Siemens 2022

Integration (continued)

Functions for higher efficiency

- Basic functions: Speed control, torque control, positioning functions
- Intelligent starting functions for independent restart after power supply interruption
- BICO technology with interconnection of drive-specific DI/DOs for easy adaptation of the drive system to its machine environment
- Integrated safety functions for rational implementation of safety concepts
- Regulated infeed/regenerative feedback functions for preventing undesirable reactions on the supply, allowing recovery of braking energy and ensuring greater stability against line fluctuations.

DRIVE-CLiQ – the digital interface between SINAMICS components

The SINAMICS S120 components, including the motors and encoders, are interconnected via a joint serial interface called DRIVE-CLiQ. The standardized cables and connectors reduce the variety of different parts and cut storage costs. Encoder evaluations for converting standard encoder signals to DRIVE-CLiQ are available for third-party motors or retrofit applications.

Electronic rating plates in all components

An important digital linkage element of the SINAMICS S120 drive system are the electronic rating plates integrated in every component. They allow all drive components to be detected automatically via DRIVE-CLiQ wiring. As a result, data do not need to be entered manually during commissioning or component replacement – helping to ensure that drives are commissioned successfully!

The electronic rating plate contains all the relevant technical data about that particular component. In the motors, for example, this data includes the parameters of the electric equivalent circuit diagram and characteristic values for the built-in motor encoder. In addition to the technical data, the electronic rating plate includes logistical data (manufacturer ID, article number, and ID). Since this data can be called up electronically on site or remotely, all the components used in a machine can always be individually identified, which helps simplify servicing.

Technical specifications

Article No.	6SL3555-2BC10-0AA0
Product designation	AM600 Adapter Module
Line connection voltage	380 ... 480 V 3 AC ±10 % (in operation -15 % <1 min)
Line frequency	47 ... 63 Hz
Electronics power supply (input)	
• Electronics voltage	24 V DC -15 ... +20 %
• Electronics current	20 A
• 24 V busbar current-carrying capacity	20 A
Electronics line supply (output)	
• Electronics power supply	48 V DC
• Rated power P_{out} [1]	0.45 kW
• Output current	10 A
DC link supply	
• DC link voltage	510 ... 720 V DC
• Output current I_{rated}	25 A
• Base-load current I_{base}	21.3 A
• S6 current I_{S6} 40 %	30 A
• Peak current I_{max}	50 A
• DC link capacitance	705 µF ±20 %
• DC link busbar current-carrying capacity	100 A
Rated power, electrical For a DC link voltage of 600 V DC	14.7 kW
Total power loss Including electronics losses	0.06 kW
Minimum cable length to the 1st axis	3 m (9.84 ft)
Format	Booksize compact
Degree of protection	IP20
Ambient temperature during operation, perm.	0 ... 40 °C (32 ... 104 °F) >40 ... 55 °C (104 ... 131 °F) see derating characteristics of the Line Modules
Dimensions	
• Width	75 mm (2.95 in)
• Height	270 mm (10.63 in)
• Depth	224 mm (8.82 in)
Net weight	3.2 kg (7.05 lb)

[1] Only applies for an electronics input voltage > 26.5 V.

© Siemens 2022

Technical specifications (continued)

Distributed drive unit (synchronous servomotor with Motor Module and encoder)		6SL3532-6DF71-0R..	6SL3540-6DF71-0R..	6SL3542-6DF71-0R..	6SL3562-6DF71-0R..	6SL3563-6DF71-0R..
Type of construction		IM B5 IM V1 IM V3	IM B5 IM V1 IM V3	IM B5 IM V1 IM V3	IM B5 IM V1 IM V3	IM B5 IM V1 IM V3
Cooling method		Surface convection	Surface convection	Surface convection	Surface convection	Surface convection
Ambient temperature during operation, perm.	°C (°F)	-15 ... +40 (5 ... 104) >40 ... 55 (104 ... 131) with derating	-15 ... +40 (5 ... 104) >40 ... 55 (104 ... 131) with derating	-15 ... +40 (5 ... 104) >40 ... 55 (104 ... 131) with derating	-15 ... +40 (5 ... 104) >40 ... 55 (104 ... 131) with derating	-15 ... +40 (5 ... 104) >40 ... 55 (104 ... 131) with derating
Installation altitude, max.	m (ft)	1000 (3281) [1]	1000 (3281) [1]	1000 (3281) [1]	1000 (3281) [1]	1000 (3281) [1]
Sound pressure level L_{pA} (1 m) acc. to DIN EN ISO 1680, max. Tolerance +3 dB	dB	55	55	55	65	65
Vibrational load in operation Acc. to IEC 68-2-6, DIN EN 60721 Part 3-0 and Part 3-3		Class 3M3	Class 3M3	Class 3M3	Class 3M3	Class 3M3
• Constant deflection in frequency range 2 … 9 Hz	mm (in)	1.5 (0.06)	1.5 (0.06)	1.5 (0.06)	1.5 (0.06)	1.5 (0.06)
• Constant deflection in frequency range 10 … 200 Hz		0.5 × *g*	0.5 × *g*	0.5 × *g*	0.5 × *g*	0.5 × *g*
Shock load in operation Acc. to DIN EN 60721 Part 3-0 and Part 3-3		Class 3M3	Class 3M3	Class 3M3	Class 3M3	Class 3M3
• Max. peak acceleration		7 × *g*	7 × *g*	7 × *g*	7 × *g*	7 × *g*
• Shock duration	ms	22	22	22	22	22
Degree of protection						
• Standard		IP54 (IP65 available soon)	IP65	IP65	IP65	IP65
• Optional		IP67	IP67	IP67	IP67	IP67
Net weight						
• Without brake	kg (lb)	4.1 (9.04)	6 (13.2)	7.4 (16.3)	11.9 (26.2)	13.9 (30.6)
• With brake	kg (lb)	4.5 (9.92)	6.4 (14.1)	7.7 (17.0)	13.3 (29.3)	15.3 (33.7)
Synchronous servomotor						
Shaft height		36	48 short	48 long	63 short	63 long
Rated speed	rpm	3000	3000	3000	3000	3000
Max. speed	rpm	9000	9000	6400	5600	6400
Rated torque	Nm (lb_f-ft)	0.8 (0.59)	1.05 (0.77)	1.8 (1.33)	2.7 (1.99)	2.2 (1.62)
Torque, max.	Nm (lb_f-ft)	3 (2.21)	4.9 (3.61)	10 (7.38)	19.3 (14.2)	27 (19.9)
Static torque	Nm (lb_f-ft)	1 (0.74)	1.3 (0.96)	2.5 (1.84)	5 (3.69)	7.1 (5.24)
Stall current	A	1.4	1.9	1.8	3.15	5
Moment of inertia						
• Without brake	kgm^2 (lb_f-in-s^2)	0.065 (0.58) × 10^{-3}	0.16 (1.42) × 10^{-3}	0.29 (2.57) × 10^{-3}	1.12 (9.91) × 10^{-3}	1.47 (13.01) × 10^{-3}
• With brake	kgm^2 (lb_f-in-s^2)	0.075 (0.66) × 10^{-3}	0.192 (1.70) × 10^{-3}	0.32 (2.83) × 10^{-3}	1.22 (10.8) × 10^{-3}	1.57 (13.9) × 10^{-3}
Shaft torsional stiffness	Nm/rad (lb_f-ft/rad)	4100 (3024)	13000 (9589)	11400 (8409)	26500 (19546)	25000 (18440)

[1] From 1000 m (3281 ft) to 4000 m (13124 ft) above sea level: – Reduction of the output current by 10 % per 1000 m (3281 ft) or – Reduction of the ambient temperature by 5 K per 1000 m (3281 ft) from 2000 m (6562 ft) to 4000 m (13124 ft) above sea level additionally – Operation on line supply systems with grounded neutral point or – Operation with an isolating transformer with secondary grounded neutral point

© Siemens 2022

Technical specifications (continued)

Distributed drive unit (synchronous servomotor with Motor Module and encoder)		6SL3532-6DF71-0R..	6SL3540-6DF71-0R..	6SL3542-6DF71-0R..	6SL3562-6DF71-0R..	6SL3563-6DF71-0R..
Motor Module						
Electronics power supply	V DC	48	48	48	48	48
Power consumption, max. Electronics power supply	W	12	12	12	12	12
Power consumption, brake	W	10	15	15	20	20
Rated DC link voltage	V DC	600	600	600	600	600
DC link voltage	V DC	510 ... 720	510 ... 720	510 ... 720	510 ... 720	510 ... 720
Output voltage	V AC	0 ... 0.717 × DC link voltage	0 ... 0.717 × DC link voltage	0 ... 0.717 × DC link voltage	0 ... 0.717 × DC link voltage	0 ... 0.717 × DC link voltage
Overvoltage trip	V DC	820 ±2 %	820 ±2 %	820 ±2 %	820 ±2 %	820 ±2 %
Undervoltage trip	V DC	380 ±2 %	380 ±2 %	380 ±2 %	380 ±2 %	380 ±2 %
Current-carrying capacity of the DC link	A	25	25	25	25	25
DC link capacitance	µF	8	24	24	48	48
Pulse frequency	kHz	4	4	4	4	4
Output current						
• Output current I_{rated}	A	1.2	1.7	1.4	1.9	2
• Base-load current I_{base}	A	1.1	2.5	2	1.4	1.5
• S6 current I_{S6} 40 %	A	1.7	1.3	1.1	2.8	2.9
• Peak current I_{max}	A	4.5	7.7	7.6	14	21
Surface temperature	°C (°F)	<100 (212)	<100 (212)	<100 (212)	<100 (212)	<100 (212)
Encoder (absolute encoder AM20DQI)						
Resolution within one revolution	bit	20	20	20	20	20
Traversing range (multi-turn)	Revolutions	4096	4096	4096	4096	4096

Article No.	6FX8002-7HY..-....
Product designation	Hybrid cable
Cross-section	4 mm^2
Max. line length per AM600 Adapter Module	100 m (328 ft)
Max. current-carrying capacity	25 A

© Siemens 2022

Selection and ordering data

Designation		Article No.
AM600 Adapter Module For connecting SINAMICS S120M to SINAMICS S120		**6SL3555-2BC10-0AA0**
Distributed drive unit Comprising 1FK7 synchronous servomotor with integrated Motor Module and multi-turn absolute encoder		
• Shaft height 36		**6SL3532-6DF71-0R■■**
• Shaft height 48 short		**6SL3540-6DF71-0R■■**
• Shaft height 48 long		**6SL3542-6DF71-0R■■**
• Shaft height 63 short		**6SL3562-6DF71-0R■■**
• Shaft height 63 long		**6SL3563-6DF71-0R■■**
		↑
Feather key	Without holding brake	**A**
	With holding brake	**B**
Plain shaft	Without holding brake	**G**
	With holding brake	**H**
		↑
Degree of protection	IP65	**1**
	IP65 and shaft sealing ring IP67	**2**
MOTION-CONNECT hybrid cable Containing signal and power cables		**6FX8002-7HY■■-....** *)
		↑↑
Outlet direction	NDE (rear) / NDE (rear)	**0 0**
	NDE (rear) / DE (front)	**1 1**
	DE (front) / DE (front)	**2 2**
Accessories		
Hybrid Cabinet Bushing Cabinet bushing		**6SL3555-2DA00-0AA0**
DRIVE-CLiQ Extension Necessary for more than six distributed drive units and a second Control Unit		**6SL3555-0AA00-6AB0**
Spacing bolts (4 units) The mounting depth of the AM600 Adapter Module in booksize compact format is increased when it is mounted on these spacing bolts by such an amount that it can be integrated into a drive line-up in booksize format.		**6SL3462-1CC00-0AA0**

Selection and ordering data (continued)

Description	Article No. supplement			
Length code for pre-assembled cables	**6FX8002-7HY..-**	■	■	■ ■
0 m (0 ft) 100 m (328 ft)		**1** **2**		
0 m (0 ft) 10 m (32.8 ft) 20 m (65.6 ft) 30 m (98.4 ft) 40 m (131 ft) 50 m (164 ft) 60 m (197 ft) 70 m (230 ft) 80 m (262 ft) 90 m (295 ft)			**A** **B** **C** **D** **E** **F** **G** **H** **J** **K**	
0 m (0 ft) 1 m (32.8 ft) 2 m (6.56 ft) 3 m (9.84 ft) 4 m (13.1 ft) 5 m (16.4 ft) 6 m (19.7 ft) 7 m (22.9 ft) 8 m (26.3 ft) 9 m (29.5 ft)				**A** **B** **C** **D** **E** **F** **G** **H** **J** **K**
0 m (0 in) 0.1 m (3.94 in) 0.2 m (7.87 in) 0.3 m (11.81 in) 0.4 m (15.75 in) 0.5 m (19.96 in) 0.6 m (23.62 in) 0.7 m (27.56 in) 0.8 m (31.5 in)				**0** **1** **2** **3** **4** **5** **6** **7** **8**
Examples:	1.0 m (3.28 ft)	1	A	B 0
	2.2 m (7.22 ft)	1	A	C 2
	8.0 m (26.3 ft)	1	A	J 0

More information

Additional information is available at
www.siemens.com/sinamics-s120m

Definition of lengths for pre-assembled cables

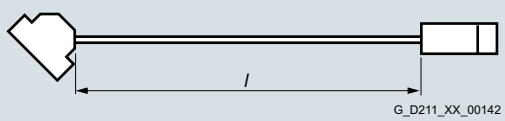

Cable with pre-assembled connectors at both ends

Tolerance:

- Cable lengths up to 10 m (32.8 ft): ± 2 %
- Cable lengths of 10 m (32.8 ft) and longer: ± 1 %

*) Article No. supplement for length code required.

© Siemens 2022

Overview

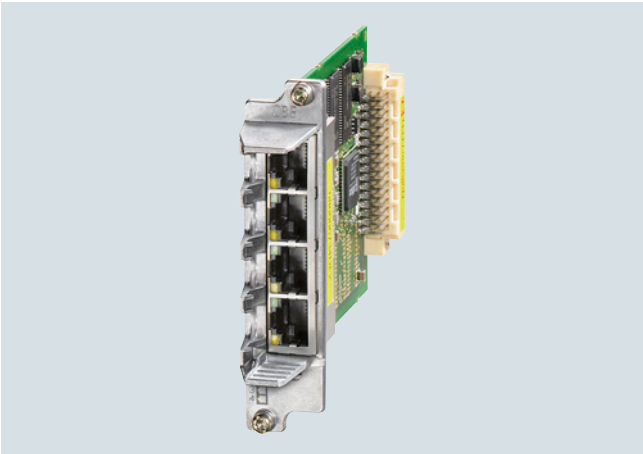

CBE20 Communication Board

The CBE20 Communication Board can be used to connect to a PROFINET IO network via a CU320-2 Control Unit.

The SINAMICS S120 drive system therefore assumes the function of a PROFINET IO device and can perform the following functions:

- PROFINET IO device
- 100 Mbps full duplex
- Supports real-time classes of PROFINET IO:
  - RT (Real-Time)
  - IRT (Isochronous Real-Time), minimum send cycle 500 µs
- Connection to control systems as PROFINET IO devices in accordance with PROFIdrive, Specification V4
- Standard TCP/IP communication for engineering processes using the STARTER commissioning tool
- Integrated 4-port switch with four RJ45 sockets based on the PROFINET ASIC ERTEC400. The optimum topology (line, star, tree) can therefore be configured without additional external switches
- Supports the functions "media redundancy" and "shared device"

Integration

The CBE20 Communication Board plugs into the option slot on the CU320-2 Control Unit.

Technical specifications

Article No.	6SL3055-0AA00-2EB0
Product designation	CBE20 Communication Board
Current requirement at 24 V DC	0.16 A
Power loss	2.4 W
Net weight	0.1 kg (0.22 lb)
Certificate of suitability	cULus

Selection and ordering data

Description	Article No.
CBE20 Communication Board	**6SL3055-0AA00-2EB0**
Accessories	
Industrial Ethernet FC	
• RJ45 Plug 180 (1 unit)	**6GK1901-1BB10-2AA0**
• RJ45 Plug 180 (10 units)	**6GK1901-1BB10-2AB0**
• Stripping tool	**6GK1901-1GA00**
• Standard cable GP 2x2	**6XV1840-2AH10**
• Flexible cable GP 2x2	**6XV1870-2B**
• Trailing cable GP 2x2	**6XV1870-2D**
• Trailing cable 2x2	**6XV1840-3AH10**
• Marine cable 2x2	**6XV1840-4AH10**

Additional information on connectors and cables is provided in

- Section MOTION-CONNECT connection systems
- Siemens Industry Mall:
  www.siemens.com/industrymall

© Siemens 2022

Overview

CUA31 Control Unit Adapter

The CUA31 Control Unit Adapter converts the PM-IF interface to a DRIVE-CLiQ interface. The CUA31 Control Unit Adapter allows Power Modules in blocksize format to operate on a Control Unit, e.g. as a single axis next to a multi-axis drive. In this case, the CUA31 Control Unit Adapter must be the last device in the DRIVE-CLiQ link from the viewpoint of the Control Unit.

Design

The CUA31 Control Unit Adapter features the following connections and interfaces:

- 1 temperature sensor input for KTY84-130, Pt1000 or PTC (Pt1000 can be used from firmware V4.7 HF17)
- 3 DRIVE-CLiQ sockets
- 1 connection for the electronics power supply via the 24 V DC supply connector
- 1 Safe Stop input

The status of the CUA31 Control Unit Adapter is indicated via multi-color LEDs.

Integration

The CUA31 Control Unit Adapter is snapped onto the Power Module in blocksize format and communicates with a CU320-2 Control Unit or a SINUMERIK Control Unit via a DRIVE-CLiQ connection.

The CUA31 Control Unit Adapter's power is supplied by the Power Module via the PM-IF interface. If the CUA31 Control Unit Adapter needs to communicate when the Power Module is switched off, it must be supplied with 24 V DC from an external source.

Other DRIVE-CLiQ devices such as Sensor Modules or Terminal Modules can be connected to the CUA31 Control Unit Adapter.

Technical specifications

Article No.	6SL3040-0PA00-0AA1
Product designation	CUA31 Control Unit Adapter
Current requirement, max. at 24 V DC without DRIVE-CLiQ supply	0.15 A for CUA31 + max. 0.5 A for PM240-2 Power Module
• Conductor cross-section, max.	2.5 mm^2
Power loss, max.	2.4 W
PE connection	M4 screw
Dimensions	
• Width	73 mm (2.87 in)
• Height	165.8 mm (6.53 in)
• Depth	37.3 mm (1.47 in)
Net weight	0.31 kg (0.68 lb)
Certificate of suitability	cULus

Selection and ordering data

Description	Article No.
CUA31 Control Unit Adapter Without DRIVE-CLiQ cable	**6SL3040-0PA00-0AA1**
Accessories for re-ordering	
Dust protection blanking plugs (50 units) For DRIVE-CLiQ port	**6SL3066-4CA00-0AA0**

© Siemens 2022

Overview

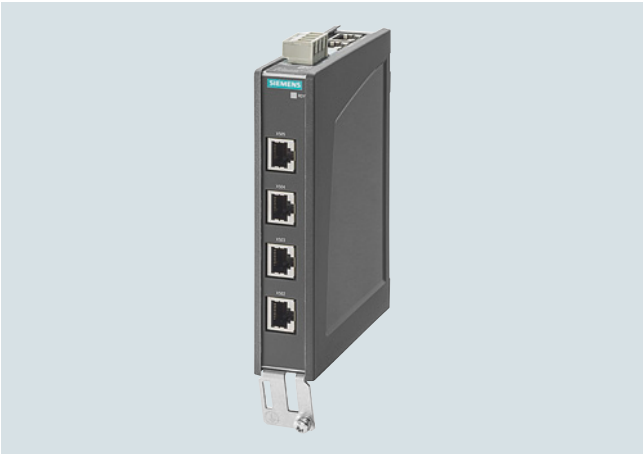

DMC20 DRIVE-CLiQ Hub Module

The DMC20 DRIVE-CLiQ Hub Module is used to implement a star-shaped topology of a DRIVE-CLiQ line. Two DMC20 DRIVE-CLiQ Hub Modules can be connected in series (cascaded).

Design

The DMC20 DRIVE-CLiQ Hub Module in degree of protection IP20 is designed for mounting in control cabinets.

The following are located on the DMC20 DRIVE-CLiQ Hub Module:

- 6 DRIVE-CLiQ sockets for connecting 5 DRIVE-CLiQ devices
- 1 connection for the electronics power supply via the 24 V DC supply connector

The status of the DMC20 DRIVE-CLiQ Hub Module is indicated via a multi-color LED.

The DMC20 DRIVE-CLiQ Hub Module can be snapped onto a TH 35 standard moiunting rail in accordance with EN 60715 (IEC 60715).

Technical specifications

Article No.	6SL3055-0AA00-6AA1
Product designation	DMC20 DRIVE-CLiQ Hub Module
Current requirement, max. at 24 V DC without DRIVE-CLiQ supply	0.15 A
• Conductor cross-section, max.	2.5 mm^2
Degree of protection	IP20
Dimensions	
• Width	30 mm (1.18 in)
• Height	151 mm (5.94 in)
• Depth	110 mm (4.33 in)
Net weight	0.36 kg (0.79 lb)
Certificate of suitability	cULus

Selection and ordering data

Description	Article No.
DMC20 DRIVE-CLiQ Hub Module Without DRIVE-CLiQ cable	**6SL3055-0AA00-6AA1**
Accessories for re-ordering	
Dust protection blanking plugs (50 units) For DRIVE-CLiQ port	**6SL3066-4CA00-0AA0**

Integration

Signals from more than one encoder can be collected with one DRIVE-CLiQ Hub Module and forwarded to the Control Unit through a single DRIVE-CLiQ cable.

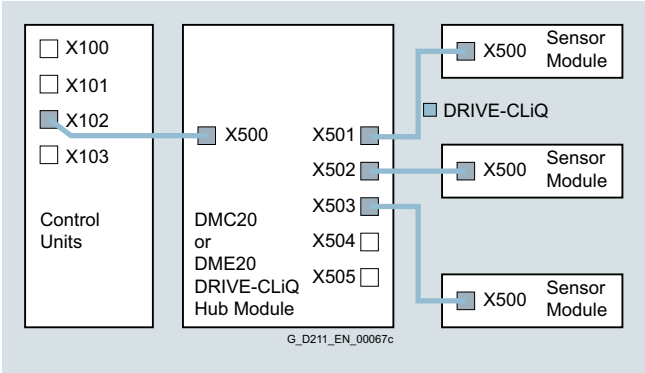

With a DRIVE-CLiQ Hub Module, individual DRIVE-CLiQ nodes can be removed without interrupting the data exchange with the remaining devices in the DRIVE-CLiQ line.

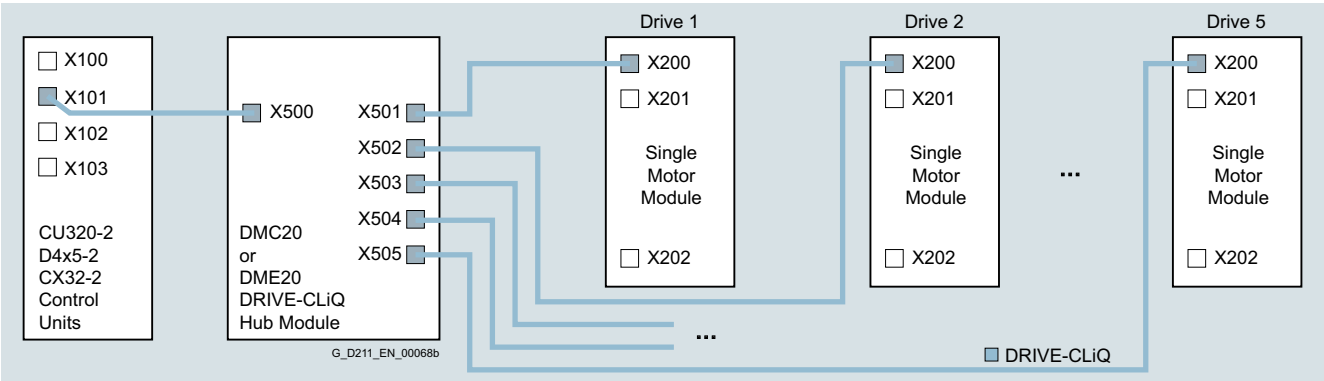

© Siemens 2022

Overview

DME20 DRIVE-CLiQ Hub Module

The DME20 DRIVE-CLiQ Hub Module is used to implement a star-shaped topology of a DRIVE-CLiQ line. Two DME20 DRIVE-CLiQ Hub Modules can be connected in series (cascaded).

Design

The following are located on the DME20 DRIVE-CLiQ Hub Module:

- 6 DRIVE-CLiQ sockets for connecting 5 DRIVE-CLiQ devices
- 1 connection for the electronics power supply via the 24 V DC circular supply connector with conductor cross-section 4 × 0.75 mm^2 (pins 1+2 internally bridged; pins 3+4 internally bridged)

The scope of supply of the DME20 DRIVE-CLiQ Hub Modules includes:

- 6 blanking plugs for sealing unused DRIVE-CLiQ sockets

Technical specifications

Article No.	6SL3055-0AA00-6AB0
Product designation	DME20 DRIVE-CLiQ Hub Module
Current requirement, max. at 24 V DC without DRIVE-CLiQ supply	0.15 A
• Conductor cross-section, max.	4 × 0.75 mm^2
Degree of protection	IP67
Dimensions	
• Width	99 mm (3.90 in)
• Height	149 mm (5.87 in)
• Depth	55.7 mm (2.19 in) (without connector)
Net weight	0.8 kg (1.76 lb)
Certificate of suitability	cULus

Selection and ordering data

Description	Article No.
DME20 DRIVE-CLiQ Hub Module Without DRIVE-CLiQ cable; without electronics power supply cable and circular connector for 24 V DC	**6SL3055-0AA00-6AB0**
Accessories	
24 V DC power supply cable	Ordering and delivery Phoenix Contact www.phoenixcontact.com
• Shielded connector, 5-pole, can be assembled by the user	1508365
• Unshielded connector, 4-pole, can be assembled by the user, Speedcon rapid interlock	1521601
Accessories for re-ordering	
SINAMICS dust-proof blanking plugs IP67 (6 units) For DRIVE-CLiQ port	**6SL3066-4CA01-0AA0**

5

© Siemens 2022

Integration

Signals from more than one encoder can be collected with one DRIVE-CLiQ Hub Module and forwarded to the Control Unit through a single DRIVE-CLiQ cable.

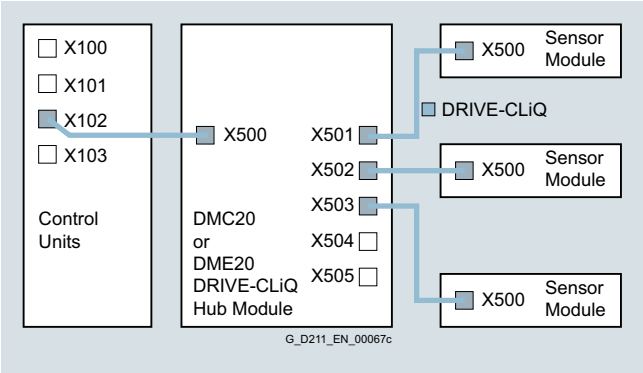

With a DRIVE-CLiQ Hub Module, individual DRIVE-CLiQ nodes can be removed without interrupting the data exchange with the remaining devices in the DRIVE-CLiQ line.

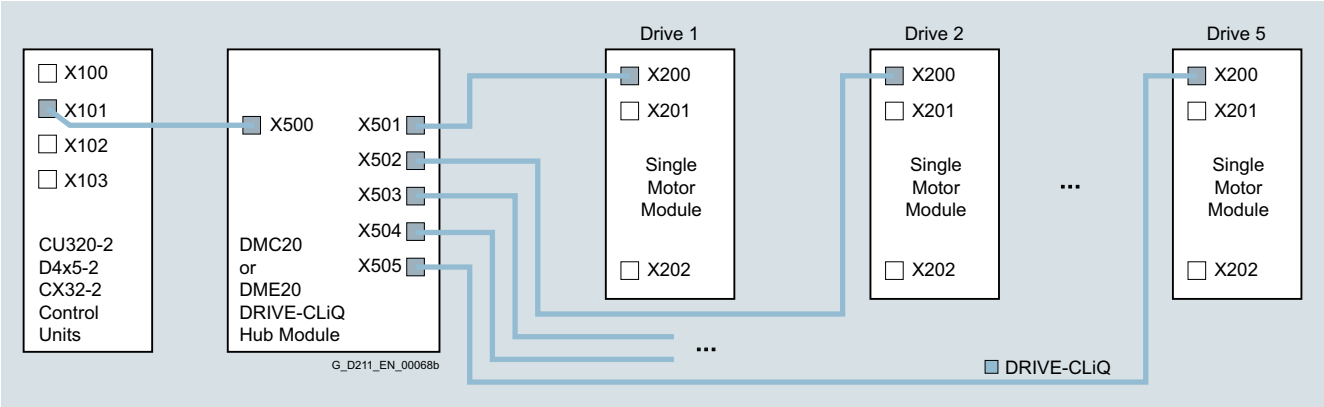

The DME20 DRIVE-CLiQ Hub Module in degree of protection IP67 is suitable for installation outside control cabinets.

© Siemens 2022

Overview

TM15 Terminal Module

The number of available digital inputs and outputs within a drive system can be expanded with the TM15 Terminal Module.

Design

The TM15 Terminal Module is equipped with the following:

- 24 bidirectional digital inputs/outputs (electrical isolation in 3 groups with 8 channels per group)
- 24 green status LEDs for indicating the logical signal state of the corresponding terminal
- 2 DRIVE-CLiQ sockets
- 1 connection for the electronics power supply via the 24 V DC power supply connector
- 1 PE connection

The status of the TM15 Terminal Module is indicated via a multi-color LED.

The TM15 Terminal Module can be snapped onto a TH 35 standard mounting rail in accordance with EN 60715 (IEC 60715).

The signal cable shield can be connected to the TM15 Terminal Module by means of a shield connection clamp, e.g. Phoenix Contact type SK8 or Weidmüller type KLBÜ CO 1. The shield connection clamp must not be used as a strain relief mechanism.

Integration

The TM15 Terminal Module can communicate with the following Control Units via DRIVE-CLiQ:

- CU310-2 Control Unit
- CU320-2 Control Unit
- SINUMERIK Control Unit

Technical specifications

Article No.	6SL3055-0AA00-3FA0
Product designation	TM15 Terminal Module
Current requirement, max. at 24 V DC without load	0.15 A
• Conductor cross-section, max.	2.5 mm^2
• Fuse protection, max.	20 A
Number of DRIVE-CLiQ sockets	2
I/O	
• Digital inputs/outputs	Parameterizable channel-by-channel as DI or DO
• Number of digital inputs/outputs	24
• Isolation	Yes, in groups of 8
• Cables and connections	Plug-in screw-type terminals
• Conductor cross-section, max.	1.5 mm^2
Digital inputs	
• Voltage	-30 ... +30 V
• Low level (an open digital input is interpreted as "low")	-30 ... +5 V
• High level	15 ... 30 V
• Current consumption at 24 V DC	9 mA
• Delay times of digital inputs, typ.[1]	
- L → H	50 µs
- H → L	100 µs
Digital outputs (continuously short-circuit proof)	
• Voltage	24 V DC
• Load current per digital output, max.	0.5 A
• Delay times (resistive load)[1]	
- L → H, typ.	50 µs
- L → H, max.	100 µs
- H → L, typ.	150 µs
- H → L, max.	225 µs
• Total current of outputs (per group), max.	
- To 60 °C (140 °F)	2 A
- To 50 °C (122 °F)	3 A
- To 40 °C (104 °F)	4 A
Power loss, max.	3 W
PE connection	M4 screw
Dimensions	
• Width	50 mm (1.97 in)
• Height	150 mm (5.91 in)
• Depth	111 mm (4.37 in)
Net weight	1 kg (2.20 lb)
Certificate of suitability	cULus

Selection and ordering data

Description	Article No.
TM15 Terminal Module Without DRIVE-CLiQ cable	**6SL3055-0AA00-3FA0**
Accessories for re-ordering	
Dust protection blanking plugs (50 units) For DRIVE-CLiQ port	**6SL3066-4CA00-0AA0**

[1] The specified delay times refer to the hardware. The actual reaction time depends on the time slot in which the digital input/output is processed.

© Siemens 2022

Overview

TM31 Terminal Module

With the TM31 Terminal Module, the number of available digital inputs and outputs and the number of analog input and outputs within a drive can be expanded.

The TM31 Terminal Module also features relay outputs with changeover contact and a temperature sensor input.

Design

The following are located on the TM31 Terminal Module:

- 8 digital inputs
- 4 bidirectional digital inputs/outputs
- 2 relay outputs with changeover contact
- 2 analog inputs
- 2 analog outputs
- 1 temperature sensor input for KTY84-130, Pt1000 or PTC (Pt1000 can be used from firmware V4.7 HF17)
- 2 DRIVE-CLiQ sockets
- 1 connection for the electronics power supply via the 24 V DC supply connector
- 1 PE connection

The status of the TM31 Terminal Module is indicated via a multi-color LED.

The TM31 Terminal Module can be snapped onto a TH 35 standard mounting rail in accordance with EN 60715 (IEC 60715).

The signal cable shield can be attached to the TM31 Terminal Module via a shield connection clamp, e.g. type SK8 supplied by Phoenix Contact or type KLBÜ CO 1 supplied by Weidmüller. The shield connection clamp must not be used as a strain relief mechanism.

Integration

The TM31 Terminal Module can communicate via DRIVE-CLiQ with the following Control Units.

- CU310-2 Control Unit
- CU320-2 Control Unit
- SINUMERIK Control Unit

© Siemens 2022

Technical specifications

Article No.	6SL3055-0AA00-3AA1
Product designation	TM31 Terminal Module
Current requirement, max. At 24 V DC without taking account of the digital outputs and DRIVE-CLiQ supply	0.5 A
• Conductor cross-section, max.	2.5 mm^2
• Fuse protection, max.	20 A
Digital inputs In accordance with IEC 61131-2 Type 1	
• Voltage	-3 ... +30 V
• Low level (an open digital input is interpreted as "low")	-3 ... +5 V
• High level	15 ... 30 V
• Current consumption at 24 V DC, typ.	9 mA
• Delay times of digital inputs, [1], approx.	
- L → H	50 µs
- H → L	100 µs
• Conductor cross-section, max.	1.5 mm^2
Digital outputs (continuously short-circuit proof)	
• Voltage	24 V DC
• Load current per digital output, max.	100 mA
• Total current of digital outputs, max.	400 mA
• Delay times of digital outputs [1]	
- Typ.	150 µs with 0.5 A resistive load
- Max.	500 µs
• Conductor cross-section, max.	1.5 mm^2
Analog inputs a switch is used to toggle between voltage and current input	
• As voltage input	
- Voltage range	-10 ... +10 V
- Internal resistance R_i	100 kΩ
- Resolution [2]	11 bits + sign
• As current input	
- Current ranges	4 ... 20 mA, -20 ... +20 mA, 0 ... 20 mA
- Internal resistance R_i	250 Ω
- Resolution [2]	10 bits + sign
• Conductor cross-section, max.	1.5 mm^2

Technical specifications (continued)

Article No.	6SL3055-0AA00-3AA1
Product designation	TM31 Terminal Module
Analog outputs (continuously short-circuit proof)	
• Voltage range	-10 ... +10 V
• Max. load current	-3 ... +3 mA
• Current ranges	4 ... 20 mA, -20 ... +20 mA, 0 ... 20 mA
• Load resistance, max.	500 Ω in the range -20 ... +20 mA
• Resolution	11 bits + sign
• Conductor cross-section, max.	1.5 mm^2
Relay outputs CO contacts	
• Max. load current	8 A
• Operational voltage, max.	250 V AC, 30 V DC
• Switching capacity, max.	
- At 250 V AC	2000 VA (cos φ = 1) 750 VA (cos φ = 0.4)
- At 30 V DC	240 W (resistive load)
• Required minimum current	100 mA
• Conductor cross-section, max.	2.5 mm^2
Power loss, max.	10 W
PE connection	M4 screw
Dimensions	
• Width	50 mm (1.97 in)
• Height	150 mm (5.91 in)
• Depth	111 mm (4.37 in)
Net weight	0.49 kg (1.08 lb)
Certificate of suitability	cULus

Selection and ordering data

Description	Article No.
TM31 Terminal Module Without DRIVE-CLiQ cable	**6SL3055-0AA00-3AA1**
Accessories for re-ordering	
Dust protection blanking plugs (50 units) For DRIVE-CLiQ port	**6SL3066-4CA00-0AA0**

[1] The specified delay times refer to the hardware. The actual reaction time depends on the time slot in which the digital input/output is processed.

[2] If the analog input is to be operated in the signal processing sense with continuously variable input voltage, the sampling frequency $f_a = 1/t_{time\ slice}$ must be at least twice the value of the highest signal frequency f_{max}.

© Siemens 2022

Overview

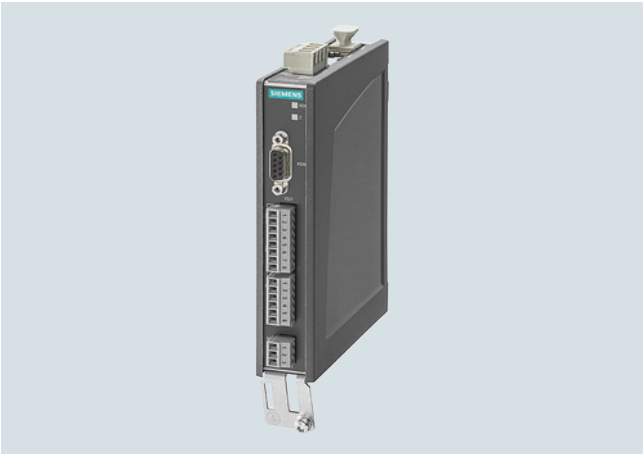

TM41 Terminal Module

The TM41 Terminal Module supplies TTL signals which emulate an incremental encoder, e.g. to a higher-level control. The encoder interface (incremental encoder emulation) can be linked to an encoder signal from the Control Unit, e.g. incremental encoder sin/cos, by parameter assignment.

The TM41 Terminal Module increases the number of digital inputs/outputs and analog inputs that are available in the drive system.

Design

The following are located on the TM41 Terminal Module:

- 4 bidirectional digital inputs/outputs
- 4 digital inputs (with electrical isolation)
- 1 analog input
- 1 interface for emulation of TTL incremental encoder (RS422)
- 1 LED for signaling zero mark detection for encoder interface
- 2 DRIVE-CLiQ sockets
- 1 connection for the electronics power supply and to supply the digital outputs via the 24V DC power supply connector
- 1 PE connection

The status of the TM41 Terminal Module is indicated via a multicolor LED.
An LED next to the interface for TTL pulse encoder emulation is illuminated as soon as a zero mark is detected.

The TM41 Terminal Module can be snapped onto a TH 35 standard mounting rail in accordance with EN 60715 (IEC 60715).

The signal cable shield can be attached to the TM41 Terminal Module via a shield connection clamp, e.g. type SK8 supplied by Phoenix Contact or type KLBÜ CO 1 supplied by Weidmüller. The shield connection clamp must not be used as a strain relief mechanism.

Integration

The TM41 Terminal Module can communicate via DRIVE-CLiQ with the following Control Units.

- CU310-2 Control Unit
- CU320-2 Control Unit
- SINUMERIK Control Unit

© Siemens 2022

Technical specifications

Article No.	6SL3055-0AA00-3PA1
Product designation	TM41 Terminal Module
Current requirement (X524 at 24 V DC) without DRIVE-CLiQ supply or digital outputs (X514)	0.5 A
• Conductor cross-section, max.	2.5 mm^2
• Fuse protection, max.	20 A
I/O	
• Digital inputs/outputs	Individually parameterizable as DI or DO
• Number of digital inputs/outputs	4
• Number of digital input/outputs (with isolation)	4
• Cables and connections	Plug-in screw-type terminals
• Conductor cross-section, max.	1.5 mm^2
Digital inputs	
• Voltage	
- Without electrical isolation	-3 ... +30 V
- With electrical isolation	-30 ... +30 V
• Low level (an open digital input is interpreted as "low")	
- Without electrical isolation	-3 ... +5 V
- With electrical isolation	-30 ... +5 V
• High level	15 ... 30 V
• Current consumption at 24 V DC, typ.	<9 mA
• Delay times of digital inputs, max. [1]	
- L → H	3 ms
- H → L	3 ms
Digital outputs (continuously short-circuit proof)	
• Voltage	24 V DC
• Load current per digital output, max.	0.5 A
• Delay times (resistive load) [1]	
- L → H, typ.	50 µs
- L → H, max.	100 µs
- H → L, typ.	75 µs
- H → L, max.	150 µs
Analog input (difference)	
• Voltage range	-10 ... +10 V
• Internal resistance	≥100 kΩ
• Resolution [2]	12 bits + sign

Technical specifications (continued)

Article No.	6SL3055-0AA00-3PA1
Product designation	TM41 Terminal Module
Pulse encoder emulation	
• Level	TTL (RS422), A+, A-, B+, B-, zero track N+, N-
• Limit frequency $f_{max.}$	512 kHz
• Ratio Encoder pulses : Encoder emulation	Any number of ratio/reduction ratio of pulses
Power loss, max.	12 W
PE connection	M4 screw
Dimensions	
• Width	30 mm (1.18 in)
• Height	151 mm (5.94 in)
• Depth	110 mm (4.33 in)
Net weight	0.32 kg (0.71 in)
Certificate of suitability	cULus

Selection and ordering data

Description	Article No.
TM41 Terminal Module Without DRIVE-CLiQ cable	**6SL3055-0AA00-3PA1**
Accessories for re-ordering	
Dust protection blanking plugs (50 units) For DRIVE-CLiQ port	**6SL3066-4CA00-0AA0**

[1] The specified delay times refer to the hardware. The actual reaction time depends on the time slot in which the digital input/output is processed.

[2] If the analog input is to be operated in the signal processing sense with continuously variable input voltage, the sampling frequency $f_a = 1/t_{time\ slice}$ must be at least twice the value of the highest signal frequency f_{max}.

© Siemens 2022

Overview

TM120 Terminal Module

Four temperature sensors can be evaluated via the TM120 Terminal Module. The temperature sensor inputs are safely electrically isolated from the evaluation electronics in the TM120 Terminal Module and are suitable for evaluating the temperature of special motors, e.g. SIMOTICS L-1FN3 linear motors and SIMOTICS T-1FW6 built-in torque motors.

Design

The following are located on the TM120 Terminal Module:

- 4 temperature sensor inputs for KTY84-130, Pt1000 or PTC (Pt1000 can be used from firmware V4.7 HF17)
- 2 DRIVE-CLiQ sockets
- 1 connection for the electronics power supply via the 24 V DC supply connector
- 1 PE connection

The status of the TM120 Terminal Module is indicated using a multi-color LED.

The TM120 Terminal Module can be snapped onto a TH 35 standard mounting rail in accordance with EN 60715 (IEC 60715).

Integration

The TM120 Terminal Module can communicate via DRIVE-CLiQ with the following Control Units with SINAMICS firmware version V4.3 and higher:

- CU310-2 Control Unit
- CU320-2 Control Unit
- SINUMERIK Control Unit

Technical specifications

Article No.	6SL3055-0AA00-3KA0
Product designation	TM120 Terminal Module
Current requirement, max. at 24 V DC	0.5 A
• Conductor cross-section, max.	2.5 mm^2
• Fuse protection, max.	20 A
Temperature sensor inputs The inputs can be individually parameterized to evaluate sensors of type KTY84-130, Pt1000, PTC or temperature switches	
• Conductor cross-section	0.2 ... 6 mm^2
• Constant current per sensor, approx.	2 mA
• Safe electrical separation up to line voltage, max.	480 V AC
Power loss, typically	2.4 W
PE connection	M4 screw
Dimensions	
• Width	30 mm (1.18 in)
• Height	150 mm (5.91 in)
• Depth	111 mm (4.37 in)
Net weight	0.41 kg (0.90 lb)

Selection and ordering data

Description	Article No.
TM120 Terminal Module Without DRIVE-CLiQ cable	**6SL3055-0AA00-3KA0**
Accessories for re-ordering	
Dust protection blanking plugs (50 units) For DRIVE-CLiQ port	**6SL3066-4CA00-0AA0**

© Siemens 2022

Overview

Hydraulic Linear Actor (HLA module)

The 2-axis HLA module is a DRIVE-CLiQ component for control cabinet mounting.

- From a topology viewpoint, the HLA module can be viewed as a hydraulic double-axis Motor Module. The HLA module is an interface module for the I/O components of a hydraulic linear drive.
- From the functional viewpoint, the HLA module therefore has similarities with a Terminal Module. More than one HLA module can be included in a SINAMIC S120 drive line-up.

Benefits

- Closed-loop control for up to two hydraulic axes
- Parallel operation of hydraulic and electrical drives
- Closed-loop velocity and force control
- Safety Integrated functions

Application

- Presses
- Rotary indexing machines
- Forming machines
- Bending technology

Function

The HLA module has been designed to control (open-loop and closed-loop) electro-hydraulic control valves of hydraulic linear axes in conjunction with the SINUMERIK 840D sl. Up to two hydraulic axes can be controlled by this module.

To control a hydraulic linear drive, a control unit is required in addition to the HLA module. This unit can be either the NCU 7x0.3B PN, an NX or a CU320-2 Control Unit which operates under the control of a SINUMERIK 840D sl system. By combining a control unit with the HLA module, it is possible to create a highly dynamic, electro-hydraulic control circuit. A hydraulic linear axis can be combined and interpolated with other hydraulic or electrical axes on one SINUMERIK 840D sl.

The HLA module requires a 24V supply. This power supply is used to internally supply the HLA module and is also required by various sensors.

The HLA module generates the power supply for the control valves and the shutoff valves from an external DC voltage supply (e.g. SITOP) with a rated voltage of 26.5 V.

The purely hydraulic components, designed for CNC operation, must be supplied by the user.

Function (continued)

Interfaces:

- 4 DRIVE-CLiQ sockets
- 1 × 24 V power supply for the electronic components
- 1 × 26.5 V power supply for the hydraulic components
- 2 TTL/SSI encoder connections (1 per axis)
- 6 pressure sensor inputs (3 per axis)
- 2 control valve connections (1 per axis)
- 2 shutoff valve outputs (1 per axis)
- 2 terminals for valve spool sensors of the shutoff valves (1 per axis)
- 2 EP terminals (1 per axis)

Technical specifications

Article No.	6SL3420-2HX00-0AA0
Product designation	Hydraulic Linear Actor (HLA module)
Electronics power supply	
• Voltage	20.4 ... 28.8 V (24 – 15 % + 20 %)
• Current, max.	1.1 A
• Power loss, max.	12 W
Supply of hydraulic components	
• DC voltage	26 ... 27 V (26.5 ± 2 %)
• Direct current, max.	8.5 A
• Temperature range	0 ... 55 °C (32 ... 131 °F) (with derated output current for the control valves)
Max. cable lengths • to valves • to sensors • to encoder (SSI, TTL)	40 m (131 ft)
DRIVE-CLiQ cables/encoder	100 m (328 ft)
24 V, 26.5 V and EP terminals	10 m (32.8 ft)
PE/ground connection	At the housing with M5/3 Nm screw
Net weight (without mating connector)	1.75 kg (3.86 lb)
Degree of protection	IP20
Environmental conditions	
Climatic environmental conditions	
• Long-term storage in the transport packaging	Class 1K4 acc. to EN 60721-3-1 Temperature: -25 ... +55 °C (-13 ... +131 °F)
• Transport in the transport packaging	Class 2K4 acc. to EN 60721-3-2 Temperature: -40 ... +70 °C (-40 ... +158 °F)
• Operation	Temperature: 0 ... +55 °C (32 ...131 °F)[1)2)] Relative humidity: 5 ... 95 % Oil mist, salt mist, ice formation, condensation, dripping water, spraying water, splashing water and water jets are not permitted

Selection and ordering data

Description	Article No.
Hydraulic Linear Actor (HLA module) 2-axis controller Two-axis version (can also be used for single-axis drives) With one measuring system in each case for direct position sensing per axis	**6SL3420-2HX00-0AA0**

1) Current derating above 40 °C (104 °F) at the output of the control valve.

2) At altitudes exceeding 1500 m (4921 ft) above sea level, the upper temperature limit must be reduced by 3.5 °C (6.3 °F) / 500 m (1641 ft).

© Siemens 2022

VSM10 Voltage Sensing Module

Overview

VSM10 Voltage Sensing Module

The VSM10 Voltage Sensing Module is capable of measuring the line voltage waveform precisely and helps Line Modules to continue functioning properly under difficult supply conditions, for example, in the case of extreme voltage fluctuations or brief supply interruptions.

The VSM10 Voltage Sensing Module is integrated in Active Interface Modules in chassis format and Smart Line Modules in chassis format. It can be optionally deployed for all Active Line Modules in booksize format and for 16 kW, 36 kW and 55 kW Smart Line Modules.

Design

The VSM10 Voltage Sensing Module has the following connections and interfaces:

- 1 connection for direct line voltage sensing up to 690 V
- 1 connection for line voltage sensing via voltage transformers; maximum voltage 100 V
- 2 analog inputs (reserved for monitoring of resonance in the Active Interface Module in chassis format)
- 1 temperature sensor input for KTY84-130, Pt1000 or PTC (Pt1000 can be used from firmware V4.7 HF17)
- 1 DRIVE-CLiQ socket
- 1 connection for the electronics power supply via the 24 V DC power supply connector
- 1 PE (protective earth) connection

The status of the VSM10 Voltage Sensing Modules is indicated via a multi-color LED.

The VSM10 Voltage Sensing Module can be snapped onto a TH 35 standard mounting rail in accordance with EN 60715 (IEC 60715).

Integration

The VSM10 Voltage Sensing Module can communicate with the following Control Units via DRIVE-CLiQ:

- CU320-2 Control Unit
- SINUMERIK Control Unit

Technical specifications

Article No.	6SL3053-0AA00-3AA1
Product designation	VSM10 Voltage Sensing Module
Current requirement, max. at 24 V DC	0.2 A
• Conductor cross-section, max.	2.5 mm^2
Power loss, max.	10 W
Line voltage detection	
• Insulation resistance neutral point – ground when jumper is not inserted	>10 MΩ
• Input resistance	
- Terminal X521	>362 kΩ/phase
- Terminal X522	>2.5 MΩ/phase
Analog inputs (reserved for monitoring an Active Interface Module in chassis format)	
• Internal resistance, approx. (between differential inputs)	100 kΩ
• Resolution	12 bits + sign
PE connection	M4 screw
Dimensions	
• Width	50 mm (1.97 in)
• Height	151 mm (5.94 in)
• Depth	110 mm (4.33 in)
Net weight	1 kg (2.21 lb)
Certificate of suitability	cULus

Selection and ordering data

Description	Article No.
VSM10 Voltage Sensing Module Without DRIVE-CLiQ cable	**6SL3053-0AA00-3AA1**
Accessories for re-ordering	
Dust protection blanking plugs (50 units) For DRIVE-CLiQ port	**6SL3066-4CA00-0AA0**

© Siemens 2022

Overview

Safe Brake Relay

With the Safe Brake Relay, the brake is controlled in accordance with IEC 61508 SIL 2 and EN ISO 13849-1 PL d and Category 3.

Design

The Safe Brake Relay can be installed below the Power Module on the shield connection plate.

The Safe Brake Relay has the following connections and interfaces:

- 1 two-channel transistor output stage to control the motor brake solenoid
- 1 connection for the cable harness (CTRL) to the Power Module in blocksize format
- 1 connection for the 24 V DC power supply

The connection between the 24 V DC supply and the Safe Brake Relay must be kept as short as possible.

The scope of supply of a Safe Brake Relay includes the following:

- 3 cable harnesses for connecting to the CTRL socket of the Power Module
  - Length 0.32 m (1.05 ft) for frame sizes FSA to FSC
  - Length 0.55 m (1.80 ft) for frame sizes FSD and FSE
  - Length 0.8 m (2.62 ft) for frame size FSF

Integration

The 24 V DC solenoid of the motor brake is directly connected to the Safe Brake Relay. External overvoltage limiters are not required.

Technical specifications

Article No.	6SL3252-0BB01-0AA0
Product designation	Safe Brake Relay
Power supply	20.4 ... 28.8 V DC Recommended rated supply voltage 26 V DC (to compensate for voltage drop in feeder cable to 24 V DC motor brake solenoid)
Current requirement, max.	
• Motor brake	2.5 A
• At 24 V DC	0.05 A + the current requirement of motor brake
Conductor cross-section, max.	2.5 mm^2
Dimensions	
• Width	69 mm (2.72 in)
• Height	63 mm (2.48 in)
• Depth	33 mm (1.30 in)
Net weight	0.17 kg (0.37 lb)

Selection and ordering data

Description	Article No.
Safe Brake Relay Including cable harness for connection to Power Module	**6SL3252-0BB01-0AA0**

© Siemens 2022

Overview

Motors with DRIVE-CLiQ interface

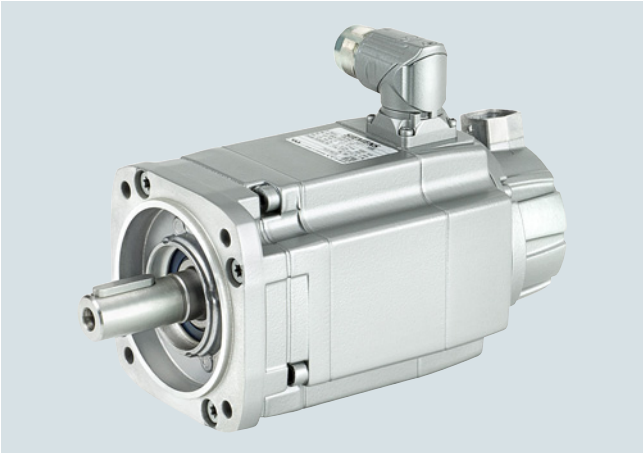

DRIVE-CLiQ is the preferred method for connecting the encoder systems to SINAMICS S110 or SINAMICS S120.

Motors with DRIVE-CLiQ interface are available for this purpose, e.g.

- SIMOTICS M-1PH8 and SIMOTICS S-1FT7/1FK7 synchronous motors
- SIMOTICS M-1PH8 asynchronous motors (induction motors)
- SIMOTICS T-1FW3 torque motors

Motors with a DRIVE-CLiQ interface can be directly connected to the SINAMICS S110 Control Unit CU305 or, in case of the SINAMICS S120 drive system, to the associated Motor Module using MOTION-CONNECT DRIVE-CLiQ cables. The MOTION-CONNECT DRIVE-CLiQ cable connection at the motor has degree of protection IP67.

The DRIVE-CLiQ interface supplies the motor encoder via the integrated 24 V DC supply and transfers the motor encoder and temperature signals and the electronic rating plate data, e.g. a unique identification number and rated data (voltage, current, torque) to the Control Unit. This means that for the various encoder types – e.g. resolver or absolute encoder – different encoder cables with varying permissible lengths are no longer required; just one cable type, MOTION-CONNECT DRIVE-CLiQ with varying permissible lengths, can be used for all encoders.

These motors simplify commissioning and diagnostics, as the motor and encoder type are identified automatically.

Motors without DRIVE-CLiQ interface

The encoder and temperature signals of motors without DRIVE-CLiQ interface, as well as those of external encoders, must be connected via Sensor Modules. Sensor Modules Cabinet-Mounted are available in degree of protection IP20 for control cabinet installation, as well as Sensor Modules External-Mounted in degree of protection IP67.

Only one encoder system can be connected to each Sensor Module.

More information

Motor encoder and temperature signals must be connected when possible to the corresponding Motor Module or Power Module and external encoders to the Control Unit. However, the DRIVE-CLiQ connections can also be bundled via DRIVE-CLiQ Hub Modules.

Safety Integrated

The Safety Integrated extended functions of the SINAMICS drive system require suitable encoders.

Motors driving a load via a belt

Unfavorable material combinations generate static electricity between the belt pulley and the belt. Electrostatic charging must be prevented, since this can discharge via the motor shaft and the encoder, thereby causing disturbances in the encoder signals. One countermeasure is to manufacture belts out of an antistatic material, for example.

© Siemens 2022

Overview

SMC10 Sensor Module Cabinet-Mounted

The SMC10 Sensor Module Cabinet-Mounted is required to evaluate the encoder signals of motors without a DRIVE-CLiQ interface. External encoders can also be connected via the SMC10.

The following encoder signals can be evaluated:

- 2-pole resolver
- Multi-pole resolver

Design

The SMC10 Sensor Module Cabinet-Mounted features the following connections and interfaces as standard:

- 1 encoder connection including motor temperature sensing (KTY84-130, Pt1000 or PTC) via SUB-D connector
- 1 DRIVE-CLiQ interface
- 1 connection for the electronics power supply via the 24 V DC supply connector
- 1 PE (protective earth) connection

The status of the SMC10 Sensor Module Cabinet-Mounted is indicated via a multi-color LED.

The SMC10 Sensor Module Cabinet-Mounted can be snapped onto a TH 35 standard mounting rail in accordance with EN 60715 (IEC 60715).

The signal cable shield is connected via the encoder system connector and can also be connected to the SMC10 Sensor Module Cabinet-Mounted via a shield connection clamp, e.g. Phoenix Contact type SK8 or Weidmüller type KLBÜ CO 1. The shield connection clamp must not be used as a strain relief mechanism.

Integration

SMC10 Sensor Modules Cabinet-Mounted communicate with a Control Unit via DRIVE-CLiQ.

Technical specifications

Article No.	6SL3055-0AA00-5AA3
Product designation	SMC10 Sensor Module Cabinet-Mounted
Current requirement, max. at 24 V DC, without taking encoder into account	0.2 A
• Conductor cross-section, max.	2.5 mm^2
• Fuse protection, max.	20 A
Power loss, max.	10 W
Encoders which can be evaluated	• 2-pole resolvers • Multi-pole resolver
• Excitation voltage, rms	4.1 V
• Excitation frequency	5 ... 16 kHz depending on the current controller clock cycle of the Motor Module or Power Module
• Transformation ratio	0.5
• Encoder frequency, max.	2 kHz (120000 rpm) depending on the number of resolver pole pairs and current controller clock cycle of the Motor Module or Power Module
• Signal subdivision (interpolation), max.	16384 times (14 bits)
• Cable length to encoder, max.	130 m (427 ft)
PE connection	M4 screw
Dimensions	
• Width	30 mm (1.18 in)
• Height	150 mm (5.91 in)
• Depth	111 mm (4.37 in)
Net weight	0.45 kg (0.99 lb)
Certificate of suitability	cULus

Selection and ordering data

Description	Article No.
SMC10 Sensor Module Cabinet-Mounted Without DRIVE-CLiQ cable	**6SL3055-0AA00-5AA3**
Accessories for re-ordering	
Dust protection blanking plugs (50 units) For DRIVE-CLiQ port	**6SL3066-4CA00-0AA0**

© Siemens 2022

Overview

SMC20 Sensor Module Cabinet-Mounted

The SMC20 Sensor Module Cabinet-Mounted is required to evaluate the encoder signals of motors without a DRIVE-CLiQ interface. External encoders can also be connected via the SMC20.

The following encoder signals can be evaluated:

- Incremental encoder sin/cos 1 V_{pp}
- Absolute encoder EnDat 2.1
- SSI encoder with incremental signals sin/cos 1 V_{pp} (firmware version 2.4 and later)

The motor temperature can also be sensed using a PTC thermistor KTY84-130, Pt1000 or PTC.

Design

The SMC20 Sensor Module Cabinet-Mounted features the following connections and interfaces as standard:

- 1 encoder connection including motor temperature sensing (KTY84-130, Pt1000 or PTC) via SUB-D connector
- 1 DRIVE-CLiQ interface
- 1 connection for the electronics power supply via the 24 V DC supply connector
- 1 PE (protective earth) connection

The status of the SMC20 Sensor Module Cabinet-Mounted is indicated via a multi-color LED.

The SMC20 Sensor Module Cabinet-Mounted can be snapped onto a TH 35 standard mounting rail in accordance with EN 60715 (IEC 60715).

The signal cable shield is connected via the encoder system connector and can also be connected to the SMC20 Sensor Module Cabinet-Mounted via a shield connection clamp, e.g. Phoenix Contact type SK8 or Weidmüller type KLBÜ CO 1. The shield connection clamp must not be used as a strain relief mechanism.

Integration

SMC20 Sensor Modules Cabinet-Mounted communicate with a Control Unit via DRIVE-CLiQ.

Technical specifications

Article No.	6SL3055-0AA00-5BA3
Product designation	SMC20 Sensor Module Cabinet-Mounted
Current requirement, max. at 24 V DC, without taking encoder into account	0.2 A
• Conductor cross-section, max.	2.5 mm^2
• Fuse protection, max.	20 A
Power loss, max.	10 W
Encoders which can be evaluated	• Incremental encoder sin/cos 1 V_{pp} • Absolute encoder EnDat 2.1 • SSI encoder with incremental signals sin/cos 1 V_{pp} (firmware version 2.4 and later)
• Encoder supply	5 V DC/0.35 A
• Encoder frequency incremental signals, max.	500 kHz
• Signal subdivision (interpolation), max.	16384 times (14 bits)
• SSI baud rate	100 ... 1000 kBaud
• Cable length to encoder, max.	100 m (328 ft)
PE connection	M4 screw
Dimensions	
• Width	30 mm (1.18 in)
• Height	150 mm (5.91 in)
• Depth	111 mm (4.37 in)
Net weight	0.45 kg (0.99 lb)
Certificate of suitability	cULus

Selection and ordering data

Description	Article No.
SMC20 Sensor Module Cabinet-Mounted Without DRIVE-CLiQ cable	**6SL3055-0AA00-5BA3**
Accessories for re-ordering	
Dust protection blanking plugs (50 units) For DRIVE-CLiQ port	**6SL3066-4CA00-0AA0**

© Siemens 2022

Overview

SMC30 Sensor Module Cabinet-Mounted

The SMC30 Sensor Module Cabinet-Mounted is required to evaluate the encoder signals of motors without a DRIVE-CLiQ interface. External encoders can also be connected via the SMC30.

The following encoder signals can be evaluated:

- Incremental encoders TTL/HTL with/without open-circuit detection (open-circuit detection is only available with bipolar signals)
- SSI encoder with TTL/HTL incremental signals
- SSI encoder without incremental signals

The motor temperature can also be sensed using a PTC thermistor KTY84-130, Pt1000 or PTC.

Design

The SMC30 Sensor Module Cabinet-Mounted features the following connections and interfaces as standard:

- 1 encoder connection including motor temperature sensing (KTY84-130, Pt1000 or PTC) either via SUB-D connector or via terminals
- 1 DRIVE-CLiQ interface
- 1 connection for the electronics power supply via the 24 V DC supply connector
- 1 PE (protective earth) connection

The status of the SMC30 Sensor Module Cabinet-Mounted is indicated via a multi-color LED.

The SMC30 Sensor Module Cabinet-Mounted can be snapped onto a TH 35 standard mounting rail in accordance with EN 60715 (IEC 60715).

The maximum encoder cable length between SMC30 modules and encoders is 100 m. For HTL encoders, this length can be increased to 300 m if the A+/A- and B+/B- signals are evaluated and the power supply cable has a minimum cross-section of 0.5 mm^2.

The signal cable shield can be connected to the SMC30 Sensor Module Cabinet-Mounted via a shield connection clamp, e.g., Phoenix Contact type SK8 or Weidmüller type KLBÜ CO 1. The shield connection clamp must not be used as a strain relief mechanism.

Integration

SMC30 Sensor Modules Cabinet-Mounted communicate with a Control Unit via DRIVE-CLiQ.

Technical specifications

Article No.	6SL3055-0AA00-5CA2
Product designation	SMC30 Sensor Module Cabinet-Mounted
Current requirement, max. at 24 V DC, without taking encoder into account	0.2 A
• Conductor cross-section, max.	2.5 mm^2
• Fuse protection, max.	20 A
Power loss, max.	10 W
Encoders which can be evaluated	• Incremental encoder TTL/HTL • SSI encoder with TTL/HTL incremental signals • SSI encoder without incremental signals
• Input current range TTL/HTL	4 ... 20 mA (typ. 10 mA)
• Encoder supply	24 V DC/0.35 A or 5 V DC/0.35 A
• Encoder frequency, max.	300 kHz
• SSI baud rate	100 ... 1000 kBaud
• Limiting frequency	300 kHz
• Resolution absolute position SSI	30 bit
• Cable length, max.	
- TTL encoder	100 m (328 ft) (only bipolar signals permitted)[1]
- HTL encoder	100 m (328 ft) for unipolar signals 300 m (984 ft) for bipolar signals[1]
- SSI encoder	100 m (328 ft)
PE connection	M4 screw
Dimensions	
• Width	30 mm (1.18 in)
• Height	150 mm (5.91 in)
• Depth	111 mm (4.37 in)
Net weight	0.45 kg (0.99 lb)
Certificate of suitability	cULus

Selection and ordering data

Description	Article No.
SMC30 Sensor Module Cabinet-Mounted Without DRIVE-CLiQ cable	**6SL3055-0AA00-5CA2**
Accessories for re-ordering	
Dust protection blanking plugs (50 units) For DRIVE-CLiQ port	**6SL3066-4CA00-0AA0**

[1] Signal cables twisted in pairs and shielded.

© Siemens 2022

Overview

SMC40 Sensor Module Cabinet-Mounted

The SMC40 Sensor Module Cabinet-Mounted is required to evaluate the encoder signals of motors without a DRIVE-CLiQ interface. External encoders can also be connected via the SMC40.

The following encoder signals can be evaluated:

- Absolute encoder EnDat 2.2

Design

The SMC40 Sensor Module Cabinet-Mounted features the following connections and interfaces as standard:

- 2 encoder system interfaces
- 2 DRIVE-CLiQ interfaces
- 1 connection for the electronics power supply via the 24 V DC supply connector
- 1 PE (protective earth) connection

The status of the SMC40 Sensor Module Cabinet-Mounted is indicated via a multi-color LED.

The SMC40 Sensor Module Cabinet-Mounted can be snapped onto a TH 35 standard mounting rail in accordance with EN 60715 (IEC 60715).

The maximum encoder cable length between SMC40 modules and encoder systems is 100 m (328 ft). The specified supply voltage of the encoder must be observed. The maximum cable length for DRIVE-CLiQ cables is 30 m (98 ft).

The signal cable shield can be connected to the SMC40 Sensor Module Cabinet-Mounted via a shield connection clamp, e.g., Phoenix Contact type SK8 or Weidmüller type KLBÜ CO 1. The shield connection clamp must not be used as a strain relief mechanism.

Integration

SMC40 Sensor Modules Cabinet-Mounted communicate with a Control Unit via DRIVE-CLiQ.

Technical specifications

Article No.	6SL3055-0AA00-5DA0
Product designation	SMC40 Sensor Module Cabinet-Mounted
Current requirement, max. At 24 V DC, without taking encoder into account	0.1 A
• Conductor cross-section, max.	2.5 mm^2
• Fuse protection, max.	20 A
Power loss, max.	4 W
Encoders which can be evaluated	Absolute encoder EnDat 2.2
PE connection	M4 screw
Dimensions	
• Width	30 mm (1.18 in)
• Height	150 mm (5.91 in)
• Depth	111 mm (4.37 in)
Net weight	0.45 kg (0.99 lb)
Certificate of suitability	cULus

Selection and ordering data

Description	Article No.
SMC40 **Sensor Module Cabinet-Mounted** Without DRIVE-CLiQ cable	**6SL3055-0AA00-5DA0**

© Siemens 2022

Overview

SME20/SME25 Sensor Module External

SME20/SME25 Sensor Modules External are encoder evaluation units for machine encoders (direct measuring systems).
The devices are designed with IP67 degree of protection. This means that the units can be installed outside the control cabinet near the machine encoder.

The following encoder signals can be evaluated:

- Incremental encoder sin/cos 1 V_{pp} without rotor position track (C and D tracks)
- Absolute encoder EnDat 2.1
- SSI absolute encoder [1] with incremental signals sin/cos 1 V_{pp} (firmware V2.4 and later)

Using adapter cable 6FX8002-2CA88-..., it is possible to connect a motor with a 17-pole circular encoder connector to the 12-pole circular connector of the SME20.

- KTY/Pt1000/PTC temperature sensors can be used to evaluate the motor temperature (only possible with SME20).
- The Sensor Module is only suitable for motors without absolute track signals (C and D tracks), e.g.:
  - Synchronous motors with pole position identification (SIMOTICS L-1FN/T-1FW/M-1FE)
  - Asynchronous motors (induction motors) (SIMOTICS M-1PH)

SME20/SME25 Sensor Modules External evaluate the encoder signals and convert the information obtained to DRIVE-CLiQ. Neither motor nor encoder data are saved in the SME20/SME25.

Design

SME20/SME25 Sensor Modules External feature the following connections and interfaces as standard:

- 1 encoder connector via circular plug
- 1 DRIVE-CLiQ interface with integrated 24 V DC electronics power supply from the Control Unit or Motor Module
- 1 PE (protective earth) connection

Integration

SME20/SME25 Sensor Modules External communicate with a Control Unit via DRIVE-CLiQ.

[1] For SME25, only encoders with 5 V supply voltage.

© Siemens 2022

Technical specifications

Article No.		6SL3055-0AA00-5EA3	6SL3055-0AA00-5HA3
Product designation		SME20 Sensor Module External	SME25 Sensor Module External
Encoder		• Incremental encoder sin/cos 1 V_{pp} with 5 V power supply 0.35 A	• Absolute encoder EnDat 2.1 with 5 V voltage supply 0.35 A • Absolute encoder SSI with incremental signals sin/cos 1 V_{pp} with 5 V voltage supply 0.35 A
Signal subdivision (interpolation)		≤ 16384 × (14 bits)	≤ 16384 × (14 bits)
Max. encoder frequency that can be evaluated	kHz	≤ 500	≤ 500
SSI/EnDat 2.1 baud rate	kHz	–	100
Measuring system interface		12-pin M23 circular connector	17-pin M23 circular connector
Outlet		IP67 DRIVE-CLiQ connector	IP67 DRIVE-CLiQ connector
Current requirement, max. At 24 V DC, not taking encoder into account	A	0.11	0.11
• Conductor cross-section		Acc. to connector contacts	Acc. to connector contacts
• Protection		Via DRIVE-CLiQ power supply source	Via DRIVE-CLiQ power supply source
Power loss, max.	W	4	4
PE connection		M4 screw/1.8 Nm	M4 screw/1.8 Nm
Cable length, max.			
• To measuring system [1]	m (ft)	3 (9.84)	3 (9.84)
• To automatic speed control	m (ft)	100 (328)	100 (328)
Degree of protection		IP67	IP67
Dimensions			
• Width	mm (in)	58 (2.28)	58 (2.28)
• Height	mm (in)	44 (1.73)	44 (1.73)
• Depth	mm (in)	112 (4.41)	112 (4.41)
Net weight	kg (lb)	0.31 (0.68)	0.31 (0.68)
Certificate of suitability		cULus	cULus

Selection and ordering data

Description	Article No.
SME20 Sensor Module External For incremental measuring systems Without DRIVE-CLiQ cable	**6SL3055-0AA00-5EA3**
SME25 Sensor Module External For absolute measuring systems Without DRIVE-CLiQ cable	**6SL3055-0AA00-5HA3**
Accessories	
Adapter cable [2] For SME20, for connecting motors with 17-pole encoder connector, with encoders, without C and D tracks	**6FX8002-2CA88-....**

[1] The maximum cable length at the encoder system interface depends on the current drawn by the encoder system and the cross-section of the supply conductors in the cable, however, a maximum of 10 m (32.8 ft) (for detailed information, see Manual SINAMICS S120 Control Units).

[2] For length code, see section MOTION-CONNECT connection systems.

© Siemens 2022

Overview

SME120/SME125 Sensor Module External

The SME120/SME125 Sensor Modules External are encoder evaluation units with degree of protection IP67, especially suitable for use in linear and torque motor applications. They can be installed close to the motor systems and encoders in the machine.

Sensor Modules External evaluate the encoder signals and motor temperature sensors specifically and convert the information obtained for DRIVE-CLiQ. The motor temperature signals are safely electrically separated.

A Hall-effect sensor box can be connected for the SME120 to determine the commutation position of a linear motor.

Neither motor nor encoder data are saved in the SME120/SME125.

The SME120 and SME125 can be operated on Control Units with firmware release V2.4 and later.

The following encoder signals can be evaluated depending on the type of Sensor Module:

- Incremental encoder sin/cos 1 V_{pp}
- Absolute encoder EnDat 2.1
- SSI absolute encoder [1] with sin/cos 1 V_{pp} incremental signals, but without reference signal

The motor temperature can also be sensed using a PTC thermistor KTY84-130, Pt1000 or PTC.

Design

SME120/SME125 Sensor Modules External feature the following connections and interfaces as standard:

- 1 encoder connection via circular connector
- 1 temperature sensor connection via circular connector
- 1 Hall-effect sensor connection via circular connector (SME120 only)
- 1 DRIVE-CLiQ interface with integrated 24 V DC electronics power supply from the Control Unit or Motor Module
- 1 PE (protective earth) connection

[1] For SME125, only SSI encoders with 5 V supply voltage..

© Siemens 2022

Technical specifications

Article No.		6SL3055-0AA00-5JA3	6SL3055-0AA00-5KA3
Product designation		SME120 Sensor Module External	SME125 Sensor Module External
Encoder		• Incremental encoder sin/cos 1 V_{pp} with 5 V power supply	• Absolute encoder EnDat 2.1 with 5 V voltage supply • Absolute encoder SSI with incremental signals sin/cos 1 V_{pp} with 5-V voltage supply
Signal subdivision (interpolation)		≤ 16384 × (14 bits)	≤ 16384 × (14 bits)
Max. encoder frequency that can be evaluated	kHz	≤ 500	≤ 500
SSI/EnDat 2.1 baud rate	kHz	–	100
Measuring system interface		12-pin M23 circular connector	17-pin M23 circular connector
Temperature sensor input		6-pin M17 circular connector	6-pin M17 circular connector
Hall-effect sensor input		9-pin M23 circular connector	–
Output		IP67 DRIVE-CLiQ connector	IP67 DRIVE-CLiQ connector
Current requirement, max. at 24 V DC, without taking encoder into account	A	0.16	0.16
• Current carrying capacity of the encoder supply, for measuring system (at 5 V DC) and, where applicable, including hall effect sensor box	A	0.35	0.35
• Conductor cross-section		Acc. to connector contacts	Acc. to connector contacts
• Protection		Via DRIVE-CLiQ power supply source	Via DRIVE-CLiQ power supply source
Power loss, max.	W	4.5	4.5
PE connection		M4 screw/1.8 Nm	M4 screw/1.8 Nm
Cable length, max.			
• To measuring system [1]/ temperature sensor	m (ft)	3 (9.84)	3 (9.84)
• To automatic speed control	m (ft)	100 (328)	100 (328)
Degree of protection		IP67	IP67
Dimensions			
• Width	mm (in)	117.6 (4.63)	117.6 (4.63)
• Height	mm (in)	43.1 (1.70)	43.1 (1.70)
• Depth	mm (in)	127 (5.00)	127 (5.00)
Net weight	kg (lb)	0.7 (1.54)	0.7 (1.54)
Certificate of suitability		cULus	cULus

Selection and ordering data

Description	Article No.
SME120 Sensor Module External For incremental measuring systems Without DRIVE-CLiQ cable	**6SL3055-0AA00-5JA3**
SME125 Sensor Module External For absolute measuring systems Without DRIVE-CLiQ cable	**6SL3055-0AA00-5KA3**
Accessories	
Connector for temperature sensor input (connector kits, 6+1-pole)	**6FX2003-0SU07**
Connector for Hall sensor input (connector kits, 9-pole)	**6FX2003-0SU01**
Connector for SME120 encoder system interface (connector kits, 12-pole)	**6FX2003-0SA12**
Connector for SME125 encoder system interface (connector kits, 17-pole)	**6FX2003-0SA17**

[1] The maximum cable length at the encoder system interface depends on the current drawn by the encoder system and the cross-section of the supply conductors in the cable, however, a maximum of 10 m (32.8 ft) (for detailed information, see Manual SINAMICS S120 Control Units).

© Siemens 2022

6/2 Overview

6/8 Technical definitions for AC motors
6/18 Liquid cooling
Liquid cooling for SIMOTICS M-1PH8/-1FE/-1PH2 and 2SP1

6/19 Feed motors
6/19 SIMOTICS S servomotors for SINAMICS S120
6/19 SIMOTICS S-1FT7 synchronous motors
6/38 SIMOTICS S-1FK7 synchronous motors
6/60 Built-in holding brakes for SIMOTICS S-1FT7/1FK7 synchronous motors
6/61 SIMOTICS S geared motors for SINAMICS S120
6/61 Planetary gearbox series SP+ for SIMOTICS S-1FT7
6/66 Planetary gearbox series SP+ for SIMOTICS S-1FK7
6/72 Planetary gearbox series NP for SIMOTICS S-1FK7
6/74 SIMOTICS S-1FK7 DYA G2 compact geared motors

6/78 Linear motors
6/78 SIMOTICS L linear motors for SINAMICS S120
6/78 SIMOTICS L-1FN3 linear motors
6/90 Recommended linear measuring systems/Liquid cooling

6/91 Torque motors
6/91 SIMOTICS T torque motors for SINAMICS S120
6/91 SIMOTICS T-1FW6 built-in torque motors

6/112 Main spindle motors
6/112 SIMOTICS M asynchronous motors for SINAMICS S120
6/112 SIMOTICS M-1PH8 asynchronous motors
6/128 • Article No. supplement
6/134 • Options
6/137 • Terminal box assignment, cable cross-sections
6/138 SIMOTICS M synchronous motors for SINAMICS S120
6/138 SIMOTICS M-1PH8 synchronous motors
6/148 • Article No. supplement
6/152 • Options
6/154 • Terminal box assignment, cable cross-sections
6/155 SIMOTICS M-1FE/1PH2 built-in motors for SINAMICS S120
6/155 SIMOTICS M-1FE synchronous built-in motors
6/158 SIMOTICS M-1FE1 synchronous built-in motors
6/166 SIMOTICS M-1FE2 synchronous built-in motors
6/168 SIMOTICS M-1FE2 asynchronous built-in motors
6/172 SIMOTICS M-1PH2 asynchronous built-in motors
6/176 Asynchronous and synchronous motors for SINAMICS S120
6/176 2SP1 motor spindles
6/181 Components for built-in/spindle motors SIMOTICS M-1FE and 2SP1
6/181 VPM Voltage Protection Module
6/182 Gearbox
6/182 Two-speed gearbox for SIMOTICS M-1PH8 asynchronous motors

6/184 Dimensional drawings
6/184 SIMOTICS S-1FT7 synchronous motors
6/190 SIMOTICS S-1FK7 synchronous motors
6/195 Planetary gearbox series SP+
6/197 Planetary gearbox series NP
6/198 SIMOTICS S-1FK7 DYA G2 compact geared motors
6/199 SIMOTICS L-1FN3 linear motors
6/201 SIMOTICS T-1FW6 torque motors
6/206 SIMOTICS M-1PH8 asynchronous motors
6/244 SIMOTICS M-1PH8 synchronous motors
6/268 SIMOTICS M-1FE synchronous built-in motors
6/270 SIMOTICS M-1FE asynchronous built-in motors
6/271 SIMOTICS M-1PH2 asynchronous built-in motors
6/272 2SP1 motor spindles

Part 9 **Drive Technology Configurator selection tool**
Guided product selection through to exact Article No.
www.siemens.com/dt-configurator

© Siemens 2022

Motor type		Features	Degree of protection	Type of cooling
SIMOTICS S servomotors				
	SIMOTICS S-1FT7 Compact	Compact Very high power density	IP64[1)] (optional IP65, IP67)	Natural cooling Forced ventilation Water cooling
	SIMOTICS S-1FT7 High Dynamic	High Dynamic Very low rotor moment of inertia	IP64 (optional IP65, IP67)	Forced ventilation Water cooling
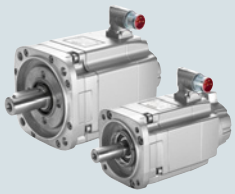	**SIMOTICS S-1FK7** Compact	Compact High power density	IP64 (optional IP65)	Natural cooling
	SIMOTICS S-1FK7 High Dynamic	High Dynamic Very low rotor moment of inertia	IP64 (optional IP65)	Natural cooling Forced ventilation
	SIMOTICS S-1FK7 High Inertia	High Inertia High or variable load moment of inertia	IP64 (optional IP65)	Natural cooling
	Compact for Power Modules 230 V 1 AC			Natural cooling
	High Dynamic for Power Modules 230 V 1 AC			Natural cooling
	SIMOTICS S-1FK7 DYA G2	Compact geared motor with integrated 1-stage planetary gearbox High maximum torques for high radial and axial forces at the shaft extension	IP64	Natural cooling

Feed motors

The potential applications for SIMOTICS S-1FT7/S-1FK7 motors are extremely diverse.

On machine tools, they are designated and used as feed motors.

On production machines, e.g., printing, packaging and textile machines, they are designated as synchronous servomotors.

Core types can be supplied for certain motor types. These core types can be express delivered as replacement motors in the event of plant outages and offer the advantage of a quicker spare parts supply. For this reason, core types should be used for configuration wherever possible.

The selection and ordering data for the SINAMICS S120 Motor Modules are based on the booksize format by way of example. Other formats are also possible. The SIZER for Siemens Drives engineering tool is available for detailed configuration.

[1)] Core type: IP65.

© Siemens 2022

Shaft height	Rated power P_{rated} for S1 duty kW (0.01 … 10000)	Rated torque M_{rated}	Selection and ordering data Page
SH 36/SH 48/SH 63/ SH 80/SH 100/SH 132	0.85 … 16.96	1.4 ... 108 Nm (12.4 ... 956 lb_f-in)	6/22 ... 6/29
SH 80/SH 100/SH 132	5 … 45.5	21 ... 250 Nm (186 ... 2213 lb_f-in)	6/30 ... 6/31
SH 63/SH 80/SH 100	3.1 … 34.2	9.2 ... 125 Nm (81.4 ... 1106 lb_f-in)	6/32 ... 6/35
SH 63/SH 80	3.8 … 10.8	11 ... 33 Nm (97.4 ... 292 lb_f-in)	6/36 ... 6/37
SH 63/SH 80	5.7 … 21.7	16.5 ... 51 Nm (146 ... 451 lb_f-in)	6/36 ... 6/37
SH 20/SH 28/SH 36/ SH 48/SH 63/SH 80/ SH 100	0.05 … 8.2	0.08 ... 37 Nm (0.71 ... 327 lb_f-in)	6/42 ... 6/47
SH 36/SH 48/SH 63/ SH 80 SH 80	0.6 … 7.5	0.9 ... 24 Nm (7.97 ... 212 lb_f-in)	6/48 ... 6/51
SH 48/SH 63/SH 80/ SH 100	0.9 … 7.7	1.5 ... 37 Nm (13.3 ... 327 lbf-in)	6/52 ... 6/53
SH 20/SH 28/SH 36/ SH 48	0.05 … 0.8	0.08 … 2.6 Nm (0.71 ... 23.0 lb_f-in)	6/54 ... 6/57
SH 36/SH 48	0.4 … 0.9	1.2 ... 3 Nm (10.6 ... 26.6 lb_f-in)	6/58 ... 6/59
SH 36/SH 48/SH 63	0.37 … 1.25	9.5 ... 46 Nm (84.1 ... 407 lb_f-in)	6/76 ... 6/77

© Siemens 2022

Motor type	Features	Degree of protection	Type of cooling
SIMOTICS L linear motors			
SIMOTICS L-1FN3	Synchronous linear motor Permanent-magnet excited	IP65	Water cooling

Motor type	Features	Degree of protection	Type of cooling
SIMOTICS T built-in torque motors			
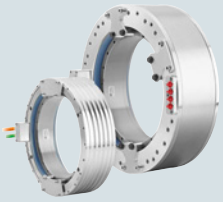 **SIMOTICS T-1FW6 Standard**	Synchronous motor Built-in torque motor Hollow shaft Individual components Permanent-magnet excited	IP23[1)]	Natural cooling Water cooling
SIMOTICS T-1FW6 High Speed			Water cooling

Linear and torque motors

The potential applications for SIMOTICS L-1FN3/T-1FW6 motors are extremely diverse.

On machine tools, they are designated and used as feed motors.

On production machines, e.g., printing, packaging and textile machines, they are designated as synchronous servomotors.

The selection and ordering data for the SINAMICS S120 Motor Modules are based on the booksize format by way of example. Other formats are also possible. The SIZER for Siemens Drives engineering tool is available for detailed configuration.

[1)] The final degree of protection (minimum degree of protection is IP54) for the installed motor is determined by the machine manufacturer.

© Siemens 2022

Primary section width mm	Feedrate force F_N N (0.1 … 10000)	Velocity v_{max} at F_{rated}	Selection and ordering data
			Page
Precision cooling without with 67/96 76/105 126/141 135/150 188/248 197/257 342 351	Peak load: 200 … 8100	112 ... 881 m/min (234 ... 1618 ft/min)	6/80 ... 6/83
	Continuous load: 151 … 10400	59 ... 429 m/min (194 ... 1407 ft/min)	6/84 ... 6/87

Diameter mm	Rated torque M_{rated} Nm (0.1 … 10000)	Rated speed n_{rated}	Selection and ordering data
			Page
Outer diameter 159/184	9.91 … 38.9	400 ... 600 rpm	6/94 ... 6/95
159/184/230/310/385/440/502/576/730	23.2 … 5760	37.2 ... 940 rpm	6/96 ... 6/107
230/310/385/502/576	150 … 4310	108 ... 1060 rpm	6/108... 6/111

6

© Siemens 2022

Motor type	Features	Degree of protection	Type of cooling
SIMOTICS M main spindle motors			
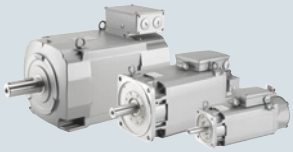 **SIMOTICS M-1PH8**	Asynchronous motor Three-phase squirrel-cage motor without housing Compact unit with high power density	IP55 IP65/IP55[1]	Forced ventilation Water cooling
	SIMOTICS M-1PH8 Premium Performance	IP55 IP65	Forced ventilation Water cooling
	Synchronous motor Permanent-magnet excited Outstanding performance properties Compact unit with extremely high power density	IP55 IP65/IP55[1]	Forced ventilation Water cooling
SIMOTICS M-1FE1/1FE2	Synchronous motor Built-in spindle motor Permanent-magnet excited	IP00 IP00	Water cooling Water cooling
	Asynchronous motor Built-in spindle motor Permanent-magnet excited	IP00	Water cooling
SIMOTICS M-1PH2	Asynchronous motor Built-in spindle motor	IP00	Water cooling
Motor spindles			
2SP1 motor spindles	Synchronous and asynchronous versions	Operating range: IP64 Behind the spindle flange: IP53	Water cooling

Main spindle motors

The potential applications for SIMOTICS M-1PH8/M-1FE1/M-1FE2/M-1PH2 motors and 2SP1 motor spindles are extremely diverse.

In machine tools, they are usually designated and used as main spindle motors.

[1] From SH 180: IP55.

© Siemens 2022

Shaft height / diameter mm	Rated power P_{rated} for S1 duty kW (0.1 … 10000)	Rated torque M_{rated}	Selection and ordering data (Page)
SH 80/SH 100/ SH 132/SH 160/ SH 132/SH 180/ SH 280	3.2 – 270	10 ... 2481 Nm (88.5 ... 21959 lb_f-in)	6/116 ... 6/117
SH 100/SH 132/ SH 160/SH 180/ SH 225/SH 280	4.0 – 265	14 ... 2598 Nm (124 ... 22995 lb_f-in)	6/124 ... 6/127
SH 80	3.0 – 8.13	3.0 ... 8.3 Nm (26.6 ... 73.5 lb_f-in)	6/118 ... 6/119
SH 80	7.3 – 11.0	7.2 ... 21.0 Nm (63.7 ... 186 lb_f-in)	6/118 ... 6/119
SH 132/SH 160/ SH 180/SH 225	18.0 – 195	95 ... 1086 Nm (841 ... 9612 lb_f-in)	6/140 ... 6/147
SH 132/SH 160/ SH 180/SH 225	20.4 – 238	108 ... 1647 Nm (956 ... 14578 lb_f-in)	6/140 ... 6/147
Outer diameter (cooling jacket)			
High Torque series 95/115/130/190/ 205/250/310	4 – 104	4.5 ... 820 Nm (39.8 ... 7258 lb_f-in)	6/158 ... 6/161
High Speed series 120/155/180/205/ 230/270	6.5 – 94	5 ... 300 Nm (44.3 ... 2655 lb_f-in)	6/162 ... 6/165
High Torque series 180	34 – 159	640 ... 1530 Nm (5664.6 ... 13542 lb_f-in)	6/166 ... 6/167
High Torque series	7.5 – 48	75 ... 611 Nm (664 ... 5408 lb_f-in)	6/170 ... 6/171
Outer diameter mm 205/250	7.5 – 23.6	48 ... 146 Nm (425 ... 1292 lb_f-in)	6/174 ... 6/175
Spindle diameter 200/250	12 – 53.4	42 ... 170 Nm (372 ... 1505 lb_f-in)	6/178 ... 6/179

In production machines, such as printing, packaging, and reforming machines, they are used as high-performance main motors.

The selection and ordering data for the SINAMICS S120 Motor Modules are based on the booksize format by way of example. Blocksize and chassis formats are also possible. The SIZER for Siemens Drives engineering tool is available for detailed configuration.

© Siemens 2022

Overview

Regulations, standards, and specifications

The motors comply with the appropriate standards and regulations, see table below.

As a result of the fact that in many countries the national regulations have been completely harmonized with the international IEC 60034-1 recommendation, there are no longer any differences with respect to coolant temperatures, temperature classes and temperature rise limits.

General specifications for rotating electrical machines	IEC 60034-1
Terminal designations and direction of rotation for electrical machines	IEC 60034-8
Types of construction of rotating electrical machines	IEC 60034-7
Noise limit values for rotating electrical machines	IEC 60034-9
Cooling methods of rotating electrical machines	IEC 60034-6
Sound pressure level	EN ISO1680
Degrees of protection of rotating electrical machines	IEC 60034-5
Vibration severity of rotating electrical machines	IEC 60034-14
Thermal motor protection	DIN 44081/DIN 44082
Temperature monitoring or thermal motor protection	EN 60034-111 EN 60034-11 (IEC 60034-11)
Shaft and flange accuracy	DIN 42955 (IEC 60072-1)
Cylindrical shaft extensions for electrical machines	DIN 748 Part 3/ DIN IEC 60072

The motors listed below are UL-approved by Underwriters Laboratories Inc. and also comply with Canadian cUR standards: SIMOTICS S-1FT7/S-1FK7/SIMOTICS T-1FW3/T-1FW6/ SIMOTICS M-1PH8 (without brake, applies only to SH 180 and SH 225)/SIMOTICS M-1FE1/M-1FE2/SIMOTICS M-1PH2/ SIMOTICS L-1FN3.

Degrees of protection for AC motors

A suitable degree of protection must be selected depending on the operating and environmental conditions to protect the machine against:

- Ingress of water, dust, and solid foreign objects,
- Contact with rotating parts inside a motor, and
- Contact with live parts.

Degrees of protection of electric motors are specified by a code. This comprises 2 letters, 2 digits and, if required, an additional letter.

IP (International Protection)
Code letter designating the degree of protection against contact and the ingress of solid foreign objects and water

0 to **6**
1st digit designating the degree of touch protection and protection against ingress of solid foreign objects

0 to **8**
2nd digit designating the degree of protection against the ingress of water (no oil protection)

W, S and **M**
Additional code letters for special degrees of protection

Most motors are supplied with the following degrees of protection:

Motor	Degree of protection	1st digit: touch protection	Protection against foreign objects	2nd digit: protection against water
Internally cooled	**IP23**	Protection against finger contact	Protection against medium-sized, solid foreign objects above 12 mm Ø	Protection against spray water up to 60° from the vertical
Surface-cooled	**IP54**	Complete protection against accidental contact	Protection against damaging dust deposits	Splash water from any direction
	IP55			Jet water from any direction
	IP64	Complete protection against accidental contact	Protection against ingress of dust	Splash water from any direction
	IP65[1]			Jet water from any direction
	IP67[1]			Motor under defined pressure and time conditions under water

Recommended degrees of protection for AC motors

When cooling lubricants are used, protection against water alone is inadequate. The IP rating should only be considered as a guideline in this case. The motors may have to be protected by suitable covers. Attention must be paid to providing suitable sealing of the motor shaft for the selected degree of protection for the motor (for 1FT7: degree of protection IP67 and flange 0).

The table can serve as a decision aid for selecting the proper degree of protection for motors.

With mounting positions IM V3/IM V19/IM V6/IM V35 with shaft extension facing upwards, a permanent covering of liquid on the flange must be avoided.

With a mounting position with the shaft extension facing upwards, liquid remaining on the motor flange can be avoided by selecting a 1FT7 motor with degree of protection IP67 and a recessed flange.

Effect \ Liquids	General workshop environment	Water; general cooling lubricant (95% water, 5% oil)
Dry	IP64	–
Humid/moist environment	–	IP64
Mist	–	IP65
Spray	–	IP65
Jet	–	IP67
Surge/brief immersion/ constant inundation	–	IP67

[1] DIN VDE 0530 Part 5 or EN 60034 Part 5 specifies that there are only 5 degrees of protection for the first digit code and 8 degrees of protection for the second digit code in relation to rotating electrical machinery. However, IP6 is included in DIN 40050, which generally applies to electrical equipment.

© Siemens 2022

Overview

Types of construction/mounting positions	Types of construction/mounting positions
IM B3	**IM B6**
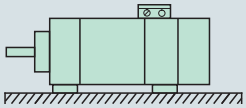	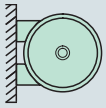
IM B7	**IM B8**
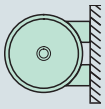	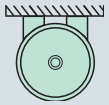
IM V6	**IM V5**
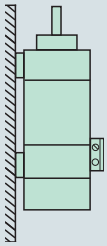	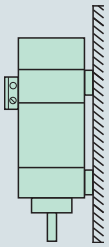
IM V35[1]	**IM V15**[1]
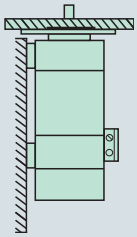	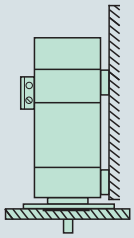
IM B35[1]	**IM B5, IM B 14**
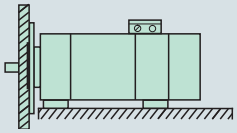	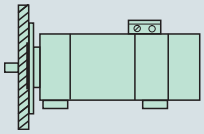
IM V3, IM V19	**IM V1, IM V18**
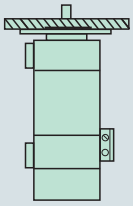	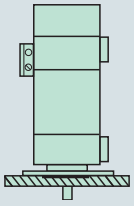

[1] Fixing on the flange and feet is necessary.

© Siemens 2022

Overview

Circular runout tolerance of the shaft relative to the enclosure axis (does not apply for SIMOTICS motors M-1FE, L-1FN3 and T-1FW6)
(referred to cylindrical shaft extensions)

Shaft height SH	Tolerance N mm (in)	Tolerance R mm (in)	Tolerance SPECIAL mm (in)
28/36	0.035 (0.00138)	0.018 (0.00071)	–
48/63/71	0.04 (0.00157)	0.021 (0.00083)	–
80/100/132	0.05 (0.00197)	0.025 (0.00098)	0.01 (0.00039)
160/180/225	0.06 (0.00236)	0.03 (0.00118)	0.01/–/– (0.00039)/ –/–
280	0.07 (0.00276)	0.035 (0.00138)	–
355	0.08 (0.00315)	0.04 (0.00157)	–

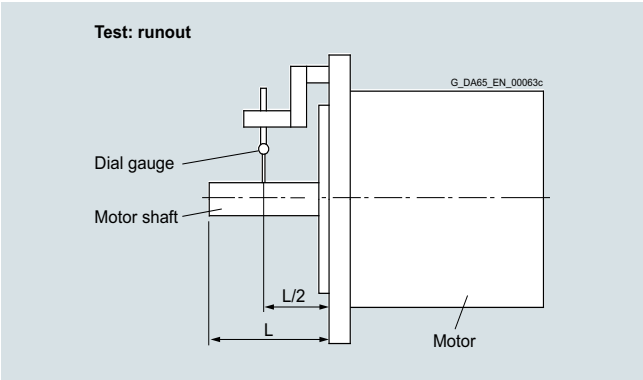

Concentricity and perpendicularity tolerance of the flange surface relative to the shaft axis (*does not apply for SIMOTICS motors M-1FE, L-1FN3 and T-1FW6*)
(referred to the centering diameter of the mounting flange)

Shaft height SH	Tolerance N mm (in)	Tolerance R mm (in)	Tolerance SPECIAL mm (in)
28/36/48	0.08 (0.00315)	0.04 (0.00157)	–
63/80/100	0.1 (0.00394)	0.05 (0.00197)	–/0.03/0.04 (-/0.00118/0.00157)
132/160/180/225	0.125 (0.00492)	0.063 (0.00248)	0.04/0.04/– (0.00157/0.00157)/–
280/355	0.16 (0.00630)	0.08 (0.00315)	–

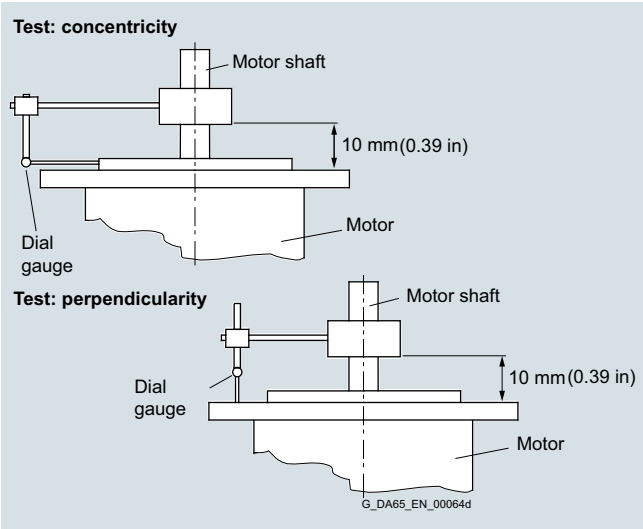

Vibration severity and vibration severity grade A according to IEC 60034-14 *(does not apply for SIMOTICS motors M-1FE, L-1FN3 and T-1FW6)*

The vibration severity is the RMS value of the vibration velocity (frequency range from 10 to 1000 Hz). The vibration severity is measured using electrical measuring instruments in compliance with DIN 45666.

The values indicated refer only to the motor. These values can increase as a result of the overall system vibrational behavior due to installation.

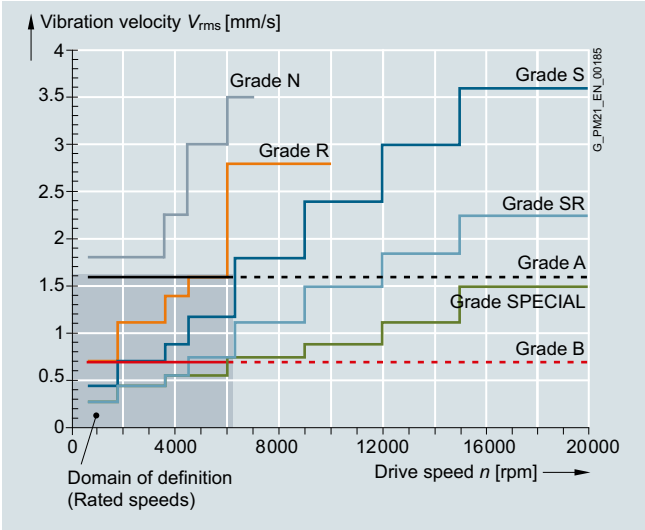

Vibration severity limit values for shaft heights 20 to 132

The speeds of 1800 rpm and 3600 rpm and the associated limit values are defined in accordance with IEC 60034-14. The speeds of 4500 rpm and 6000 rpm and the specified values are defined by the motor manufacturer.

The motors maintain vibration severity grade A up to rated speed.

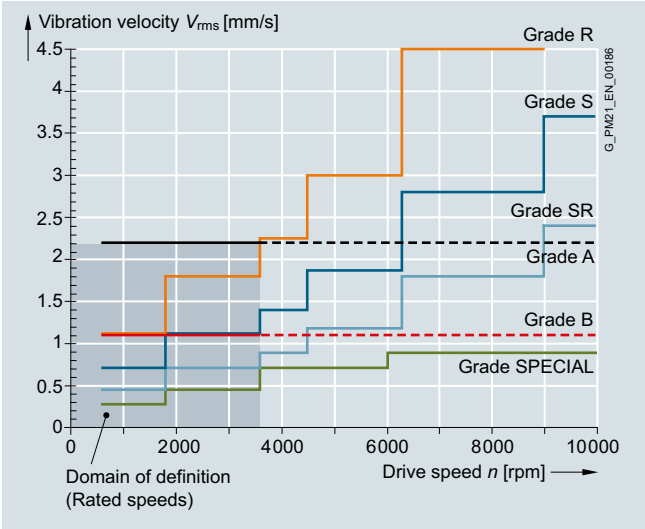

Vibration severity limit values for shaft heights 160 to 355

© Siemens 2022

Overview

Balancing according to ISO 8821 *(does not apply for SIMOTICS motors M-1FE, L-1FN3 and T-1FW6)*

In addition to the balance quality of the motor, the vibration quality of motors with mounted belt pulleys and coupling is essentially determined by the balance quality of the mounted component.

If the motor and mounted component are separately balanced before they are assembled, then the process used to balance the belt pulley must be adapted to the motor balancing type. The following different balancing methods are used on motors of types SIMOTICS M-1PH8:

- Half-key balancing
- Full-key balancing
- Plain shaft extension

The letter H (half key) or F (full key) is printed on the shaft extension face to identify a half-key balanced or a full-key balanced SIMOTICS M-1PH8 motor.

SIMOTICS S-1FT7/1FK7 motors with feather key are always half-key balanced.

In general, motors with a plain shaft are recommended for systems with the most stringent vibration quality requirements. For full-key balanced motors, we recommend belt pulleys with two opposite keyways, but only one feather key in the shaft extension.

Vibration stress, immitted vibration values
(does not apply for SIMOTICS motors M-1FE, L-1FN3 and T-1FW6)

The following maximum permissible vibration stress limit for a fully functional machine applies only to SIMOTICS S-1FT7/1FK7 permanent-magnet servomotors.

Vibration stress according to ISO 10816:

Vibration velocity V_{rms} according to ISO 10816	Max. 4.5 mm/s (0.18 in/s)
Vibration acceleration a_{peak} axial [1)]	25 m/s^2 (82.0 ft/s^2)
Vibration acceleration a_{peak} radial[1)]	50 m/s^2 (164 ft/s^2)

For all main motors of type SIMOTICS M-1PH8, the following limits are valid for (immitted) vibration values introduced into the motor from outside:

Vibration frequency	Vibration values for 1PH808/1PH810/1PH813/1PH816	
< 6.3 Hz	Vibration displacement *s*	≤0.16 mm (0.006 in)
6.3 ... 250 Hz	Vibration velocity V_{rms}	≤4.5 mm/s (0.18 in/s)
> 250 Hz	Vibration acceleration *a*	≤10 m/s^2 (32.8 ft/s^2)

Vibration frequency	Vibration values for 1PH818/1PH822/1PH828	
< 6.3 Hz	Vibration displacement *s*	≤0.25 mm (0.099 in)
6.3 ... 63 Hz	Vibration velocity V_{rms}	≤7.1 mm/s (0.28 in/s)
> 63 Hz	Vibration acceleration *a*	≤4.0 m/s^2 (13.12 ft/s^2)

Ambient conditions and installation altitude for motors with natural cooling and forced ventilation *(does not apply for SIMOTICS motors M-1FE, L-1FN3 and T-1FW6)*

Operation without restriction: -15 °C to +40 °C (5 to 104 °F)

The rated power (rated torque) is applicable to continuous duty (S1) in accordance with EN 60034-1 at rated frequency, a coolant temperature of 40 °C (104 °F) and an installation altitude of up to 1000 m (3281 ft) above sea level.

Apart from the SIMOTICS M-1PH8 motors, all motors are designed for temperature class 155 (F) and utilized in accordance with temperature class 155 (F). The SIMOTICS M-1PH8 motors are designed for temperature class 180 (H). For all other conditions, the factors given in the table below must be applied to determine the permissible output (torque).

Coolant temperature for self-cooled SIMOTICS T-1FW6 motors from -5 °C to +40 °C (23 to 104 °F).

Installation altitude above sea level	Coolant temperature (ambient temperature)			
m (ft)	< 30 °C (86 °F)	30 ... 40 °C (86 ... 104 °F)	45 °C (113 °F)	50 °C (122 °F)
1000 (3281)	1.07	1.00	0.96	0.92
1500 (4922)	1.04	0.97	0.93	0.89
2000 (6562)	1.00	0.94	0.90	0.86
2500 (8203)	0.96	0.90	0.86	0.83
3000 (9843)	0.92	0.86	0.82	0.79
3500 (11484)	0.88	0.82	0.79	0.75
4000 (13124)	0.82	0.77	0.74	0.71

[1)] For motors with separately driven fans, the limit value for axial and radial vibration acceleration is limited to 10 m/s^2 (32.8 ft/s^2).

© Siemens 2022

Overview

Duty types S1 and S6 in accordance with EN 60034-1

S1: Continuous duty

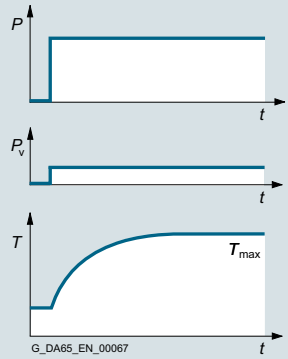

Duty cycle under constant load condition of sufficient duration to establish thermal equilibrium.

Designation: S1

Output specification (torque).

S6: Continuous duty with intermittent loading

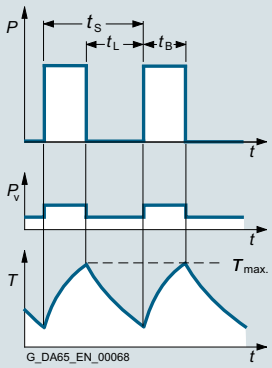

Duty cycle comprising a sequence of identical duty cycles, each of which consists of a period of constant load followed by an interval at no load. There are no de-energized intervals.

Designation:

e.g.: S6 - 40 %, 85 kW (114 HP)

$t_r = \frac{t_B}{t_B + t_L}$

t_s = 10 min

Characteristic curves

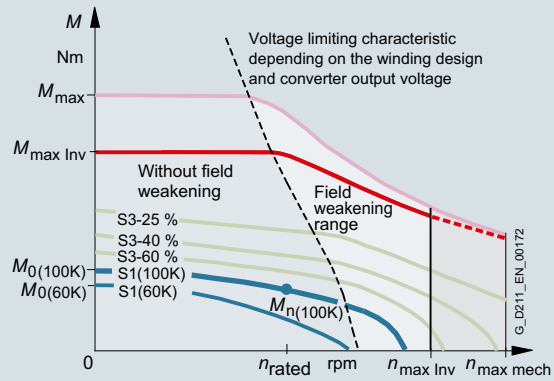

Torque characteristic of a synchronous motor operating on a converter with field weakening (example)

	Explanations
n_{rated}	Rated speed
$n_{max,\ Inv}$	Maximum permissible electric speed limit
$n_{max\ mech}$	Maximum permissible mechanical speed limit
M_0	Static torque
M_{rated}	Rated torque at rated speed
$M_{max\ Inv}$	Achievable maximum torque with recommended motor module
M_{max}	Maximum permissible torque

Rated torque

The torque supplied on the shaft is indicated in Nm (lb_f-ft) in the selection and ordering data.

$$M_{rated} = 9.55 \times P_{rated} \times \frac{1000}{n_{rated}}$$

P_{rated} Rated power in kW

n_{rated} Rated speed in rpm

M_{rated} Rated torque in Nm

$$M_{rated} = P_{rated} \times \frac{5250}{n_{rated}}$$

P_{rated} Rated power in hp

n_{rated} Rated speed in rpm

M_{rated} Rated torque in lb_f-ft

DURIGNIT IR 2000 insulation

The DURIGNIT IR 2000 insulation system consists of high-quality enamel wires and insulating sheeting in conjunction with solvent-free resin impregnation.

The insulating material system ensures that these motors will have a high mechanical and electrical stability, high service value, and a long service life.

The insulation system protects the winding to a large degree against aggressive gases, vapors, dust, oil, and increased air humidity. It can withstand the usual vibration stressing.

© Siemens 2022

Overview

Motor protection

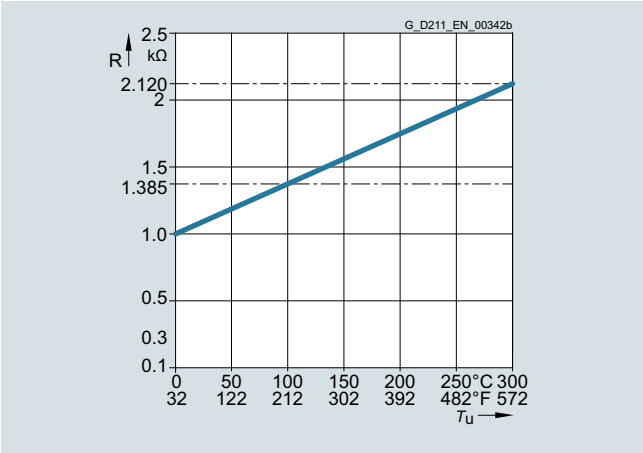

Motor protection for Pt1000 temperature sensor

The Pt1000 temperature sensor is used to measure the motor temperature for converter-fed motor operation (see characteristic curve)

This temperature sensor is a shunt that changes its resistance depending on temperature in accordance with a defined curve.

Siemens converters calculate the motor temperature from the resistance of the temperature sensor.

Their parameters can be set for specific alarm and shutdown temperatures.

The temperature sensor is embedded in the winding overhang of the motor in the same way as a PTC thermistor.

Motors without an integrated DRIVE-CLiQ interface are now fitted with the new Pt1000 temperature sensor.

Motors with an integrated DRIVE-CLiQ interface (S-1FT7/ S-1FK7/ M-1PH8) have also been converted to Pt1000.

The temperature sensors are evaluated in the SINAMICS S120 drive system by default.

If the motors are operated on converters that do not feature a temperature sensor evaluation function, the temperature can be evaluated with the external 3RS1040 temperature monitoring relay.

You can find more information in the Siemens Industry Mall.
www.siemens.com/industrymall

Paint finish (does not apply for SIMOTICS motors M-1FE, L-1FN3 and T-1FW6)

Motors without a paint finish have an impregnated resin coating. Motors with primer have corrosion protection.

All motors can be painted over with commercially available paints. Up to 2 additional paint coats are permissible.

The SIMOTICS T-1FW6 motors have no painting, no coating, and should not be painted over.

Version	Suitability of paint finish for climate group in accordance with IEC 60721, Part 2 – 1
Paint finish	**Moderate** (expanded) for indoor and outdoor installation with roof protection
Special paint finish	**Worldwide** (expanded) for outdoor installation

© Siemens 2022

Overview

Built-in encoder

The encoder system is not included in the scope of delivery of the SIMOTICS motor series M-1FE, M-1PH2, L-1FN and T-1FW6. The information on the encoder systems refers to the built-in encoders of the SIMOTICS motor series S-1FT7, S-1FK7 and M-1PH8.

Built-in encoder systems without DRIVE-CLiQ interface

For motors without an integrated DRIVE-CLiQ interface, the analog encoder signal in the drive system is converted into a digital signal. For these motors and external encoders, the encoder signals must be connected to SINAMICS S120 via Sensor Modules.

Built-in encoder systems with DRIVE-CLiQ interface

For motors with integrated DRIVE-CLiQ interface, the analog encoder signal is internally converted to a digital signal. No further conversion of the encoder signal in the drive system is required. The motor-internal encoders are the same encoders that are used for motors without a DRIVE-CLiQ interface. Motors with a DRIVE-CLiQ interface simplify commissioning and diagnostics, for example, as the encoder system is identified automatically.

The different encoder types, incremental, absolute or resolver, are uniformly connected with one type of MOTION-CONNECT DRIVE-CLiQ cable.

Short designations for the encoder systems

The first letters of the short designation define the encoder type. This is followed by the resolution in signals per revolution if S/R is specified (for encoders without DRIVE-CLiQ interface) or in bits if DQ or DQI is specified (for encoders with DRIVE-CLiQ interface).

Type	Resolution/interface	
AM AS IC IN HTL	xxxxS/R	Encoder without DRIVE-CLiQ interface Resolution = xxxx signals per revolution
AM AS IC IN R	xxDQ, xxDQI or xxDQC	Encoder with DRIVE-CLiQ interface Resolution = xx bits
AM	Multi-turn absolute encoder	
AS	Single-turn absolute encoder	
IC	Incremental encoder sin/cos with commutation position C and D tracks	
IN	Incremental encoder sin/cos without commutation position	
HTL	Incremental encoder with HTL signal	
R	Resolver	

Overview of motor encoder systems

Encoder without DRIVE-CLiQ interface				Encoder with DRIVE-CLiQ interface				Absolute position within one revolution (single-turn)	Absolute position over 4096 revolutions (multi-turn)	For use in safety applications
	Identification letter in the motor article number				Identification letter in the motor article number					
Encoder	1FT7	1FK7	1PH8	Encoder	1FT7	1FK7	1PH8			
–	–	–	–	AM24DQI	C[1)]/L[2)]	C	–	Yes	Yes	Yes
–	–	–	–	AM20DQI	–	R	–	Yes	Yes	Yes
–	–	–	–	AS24DQI	B[1)]/K[2)]	B	–	Yes	No	Yes
–	–	–	–	AS20DQI	–	Q	–	Yes	No	Yes
AM2048S/R	M	E	E	AM22DQ	F	F	F	Yes	Yes	Yes
AM512S/R	–	H	–	AM20DQ	–	L	–	Yes	Yes	Yes
AM32S/R	–	G	–	AM16DQ	–	–	–	Yes	Yes	No
AM16S/R	–	J	–	AM15DQ	–	V	–	Yes	Yes	No
AS2048S/R	–	–	–	AS22DQ	–	–	–	Yes	No	No
IC2048S/R	N	A	M	IC22DQ	D	D	D	No	No	Yes
IN 512S/R	–	–	T	IN 20DQ	–	–	U	No	No	Yes
IN 256S/R	–	–	C	IN 18DQ	–	–	S	No	No	Yes
IN2048S/R	–	–	–	IN22DQ	–	–	–	No	No	Yes
HTL1024S/R	–	–	H	–	–	–	–	No	No	No
HTL2048S/R	–	–	J/T	–	–	–	–	No	No	No
Resolver p=1	–	T	–	R14DQ	–	P	–	Yes	No	No
Resolver p=3	–	S	–	R15DQ	–	U	–	No	No	No
Resolver p=4	–	S	–	R15DQ	–	U	–	No	No	No

Not every encoder is available for every motor frame size.

– Not possible

[1)] RJ45 signal connection
[2)] M17 signal connection

© Siemens 2022

Overview

Multi-turn absolute encoder

This encoder outputs an absolute angular position between 0° and 360° in the specified resolution. An internal measuring gearbox enables it to differentiate 4096 revolutions.

So with a ball screw, for example, the absolute position of the slide can be determined over a longer distance.

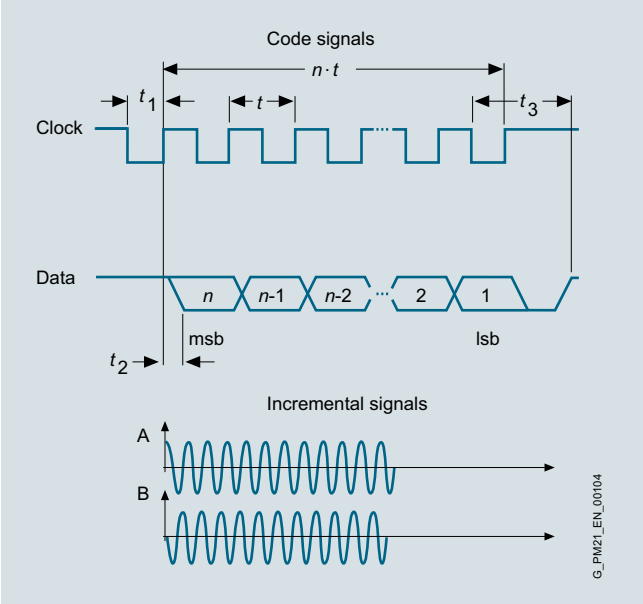

Multi-turn absolute encoder

Single-turn absolute encoder

This encoder outputs an absolute angular position between 0° and 360° in the specified resolution. In contrast to the multi-turn absolute encoder, it has no measuring gearbox and can therefore only supply the position value within one revolution. It does not have a traversing range.

Absolute encoders without DRIVE-CLiQ interface	
AM2048S/R encoder	Absolute encoder 2048 S/R, 4096 revolutions Multi-turn, with EnDat interface
AM512S/R encoder	Absolute encoder 512 S/R, 4096 revolutions Multi-turn, with EnDat interface
AM32S/R encoder	Absolute encoder 32 S/R, 4096 revolutions, multi-turn, with EnDat interface
AM16S/R encoder	Absolute encoder 16 S/R, 4096 revolutions, multi-turn, with EnDat interface
AS2048S/R encoder	Absolute encoder 2048 S/R, single-turn
Absolute encoders with DRIVE-CLiQ interface	
AM24DQI encoder	Absolute encoder 24 bit (resolution 16777216, encoder-internal 2048 S/R) + 12 bit multi-turn (traversing range 4096 revolutions)
AM20DQI encoder	Absolute encoder, 20 bit (resolution 1048576, encoder-internal 512 S/R) + 12 bit multi-turn (traversing range 4096 revolutions)
AM22DQ encoder	Absolute encoder 22 bit (resolution 4194304, encoder-internal 2048 S/R) + 12 bit multi-turn (traversing range 4096 revolutions)
AM20DQ encoder	Absolute encoder, 20 bit (resolution 1048576, encoder-internal 512 S/R) + 12 bit multi-turn (traversing range 4096 revolutions)
AM16DQ encoder	Absolute encoder, 16 bit (resolution 65536, encoder-internal 32 S/R) + 12 bit multi-turn (traversing range 4096 revolutions)
AM15DQ encoder	Absolute encoder, 15 bit (resolution 32768, encoder-internal 16 S/R) + 12 bit multi-turn (traversing range 4096 revolutions)
AS24DQI encoder[2)]	Absolute encoder 24 bit single-turn (resolution 16777216)
AS20DQI encoder[2)]	Absolute encoder 20 bit single-turn (resolution 1048576)
AS22DQ encoder	Absolute encoder 22 bit single-turn (resolution 4194304)

Technical specifications	
Absolute encoders without DRIVE-CLiQ interface	
Supply voltage	5 V
Absolute position interface via EnDat 2.1	
• Traversing range (multi-turn)[1)]	4096 revolutions
Incremental signals (sinusoidal, 1 V_{pp})	
• Signals per revolution	2048/512/32/16
Absolute encoders with DRIVE-CLiQ interface	
Supply voltage	24 V
Absolute position via DRIVE-CLiQ	
• Resolution within one revolution	$2^{24}/2^{22}/2^{20}/2^{16}/2^{15}$ bit
• Traversing range (multi-turn)[1)]	4096 revolutions

[1)] Not for absolute encoder, single-turn AS.

[2)] The previously installed incremental encoder is now replaced by a single-turn absolute encoder.

© Siemens 2022

Overview

Incremental encoder

This encoder senses relative movements and does not supply absolute position information. In combination with evaluation logic, a zero point can be determined using the integrated reference mark, which can be used to calculate the absolute position.

Incremental encoder IC/IN (sin/cos)

The encoder outputs sine and cosine signals. These can be interpolated using evaluation logic (usually 2048 points) and the direction of rotation can be determined.

In the version with DRIVE-CLiQ interface, this evaluation logic is already integrated in the encoder.

Commutation position

The position of the rotor is required for commutation of a synchronous motor. Encoders with commutation position (also termed C and D track) detect the angular position of the rotor.

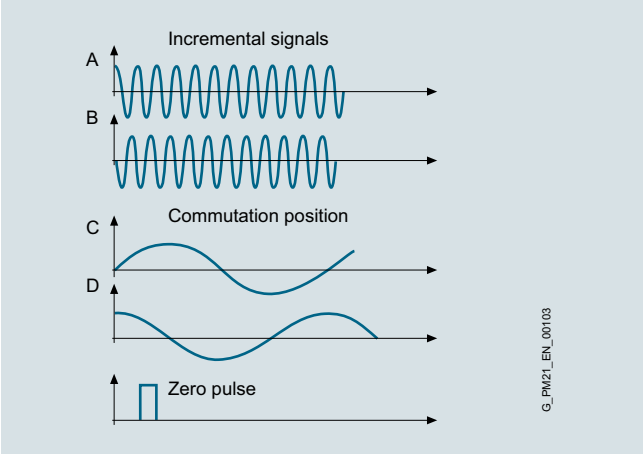

Incremental encoder IC/IN (sin/cos), commutation position only for IC

Incremental encoder HTL

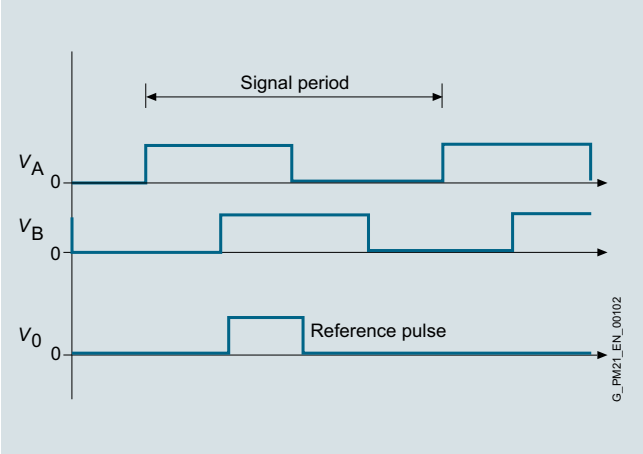

Incremental encoder HTL

Incremental encoders without DRIVE-CLiQ interface	
IC2048S/R encoder	Incremental encoder sin/cos 1 V_{pp} 2048 S/R, with C and D tracks
IN512S/R encoder	Incremental encoder sin/cos 1 V_{pp} 512 S/R without C and D tracks
IN2048S/R encoder	Incremental encoder sin/cos 1 V_{pp} 2048 S/R without C and D track
HTL IC2048S/R encoder	Incremental encoder HTL 2048 S/R
HTL IN1024S/R encoder	Incremental encoder HTL 1024 S/R
Incremental encoders with DRIVE-CLiQ interface[1)]	
IC22DQ encoder	Incremental encoder 22 bit (resolution 4194304, encoder-internal 2048 S/R) + commutation position 11 bit
IN20DQ encoder	Incremental encoder 20 bit without commutation position
IN22DQ encoder	Incremental encoder 22 bit (resolution 4194304, encoder-internal 2048 S/R) without commutation position

Technical specifications	
Incremental encoders IC/IN (sin/cos) without DRIVE-CLiQ interface	
Supply voltage	5 V
Incremental signals per revolution	
• Resolution (sin/cos)	2048
• Commutation position (for IC only)	1 sin/cos
• Reference signal	1
Incremental encoder IC/IN (sin/cos) with DRIVE-CLiQ interface	
Supply voltage	24 V
Incremental signals per revolution	
• Resolution	2^{22} bit
• Commutation position in bits (for IC only)	11
• Reference signal	1
Incremental encoder HTL without DRIVE-CLiQ interface	
Supply voltage	10 ... 30 V
Incremental signals per revolution	
• Resolution (HTL)	2048/1024
• Reference signal	1

[1)] Instead of the IC22DQ incremental encoder, the AS24DQI single-turn absolute encoder is used for SIMOTICS S-1FK7/1FT7.

© Siemens 2022

Overview

Resolver

The number of sine and cosine periods per revolution corresponds to the number of pole pairs of the resolver. In the case of a 2-pole resolver, the evaluation electronics may output an additional zero pulse per encoder revolution. This zero pulse ensures a unique assignment of the position information in relation to an encoder revolution. A 2-pole resolver can therefore be used as a single-turn encoder.

2-pole resolvers can be used for motors with any number of poles. With multi-pole resolvers, the pole pair numbers of the motor and the resolver are always identical, so that the resolution is correspondingly higher than with 2-pole resolvers.

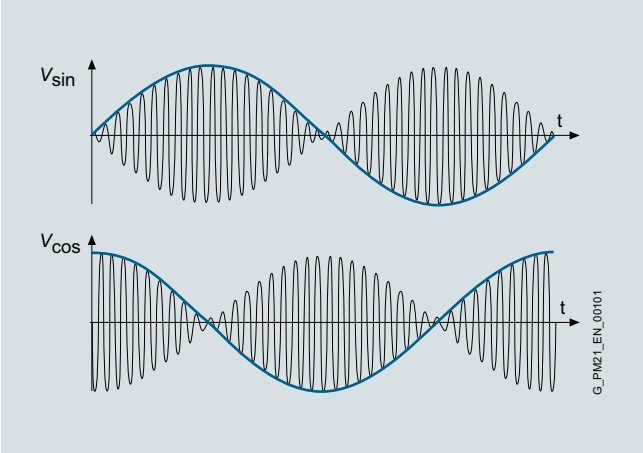

Resolver without DRIVE-CLiQ interface[1]	
Resolver p = 1	2-pole resolver
Resolver p = 3	6-pole resolver
Resolver p = 4	8-pole resolver
Resolver with DRIVE-CLiQ interface	
R15DQ	15-bit resolver (resolution 32768, internal, multi-pole)
R14DQ	14-bit resolver (resolution 16384, internal, 2-pole)

Technical specifications	
Resolver without DRIVE-CLiQ interface	
Excitation voltage, rms	2 ... 8 V
Excitation frequency	5 ... 10 kHz
Output signals	$U_{\text{sine track}} = r \times U_{\text{excitation}} \times \sin \alpha$ $U_{\text{cosine track}} = r \times U_{\text{excitation}} \times \cos \alpha$ $\alpha = \arctan (U_{\text{sine track}}/U_{\text{cosine track}})$
Transmission ratio	$r = 0.5 \pm 5\%$
Resolver with DRIVE-CLiQ interface	
Supply voltage	24 V
• Resolution	$2^{15}/2^{14}$ bit

[1] Output signals:
2-pole resolver: 1 sin/cos signal per revolution
6-pole resolver: 3 sin/cos signals per revolution
8-pole resolver: 4 sin/cos signals per revolution

© Siemens 2022

Overview

Cooling principle

For design of the cooling units, see Configuration Manual.

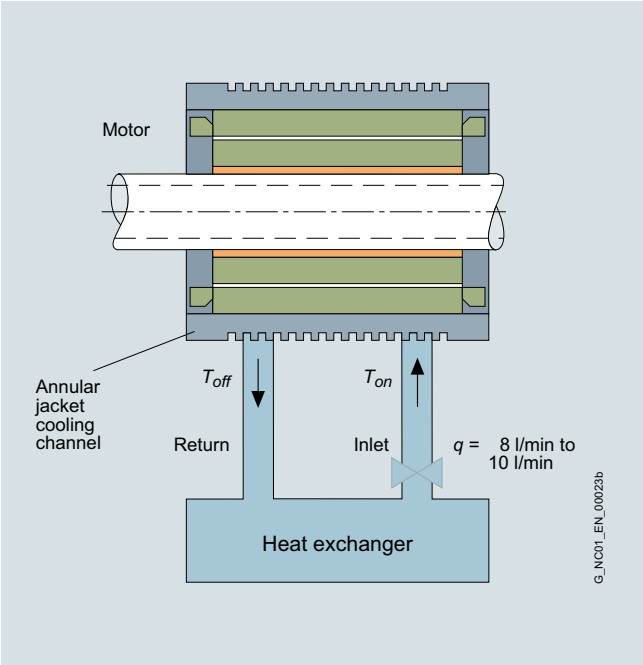

Liquid cooling

These are third-party products whose fundamental suitability is familiar to us. It goes without saying that equivalent products from other manufacturers may be used. Our recommendations are to be seen as helpful information, not as requirements or regulations. We do not warrant the composition, nature, state, or quality of third-party products.

Please get in touch with the cooler manufacturers listed below for technical information.

Cooler manufacturers
ait-deutschland GmbH www.kkt-chillers.com
BKW Kälte-Wärme-Versorgungstechnik GmbH www.bkw-kuema.de
DELTATHERM Hirmer GmbH www.deltatherm.com
Glen Dimplex Deutschland GmbH **Business unit RIEDEL cooling technology** www.riedel-kooling.com
Helmut Schimpke und Team Industriekühlanlagen GmbH + Co. KG www.schimpke.com
Hydac System GmbH www.hydac.com
Hyfra Industriekühlanlagen GmbH www.hyfra.com
Lahntechnik GmbH www.lahntechnik.com
Pfannenberg GmbH www.pfannenberg.com
Rittal GmbH & Co. KG www.rittal.de

© Siemens 2022

Overview

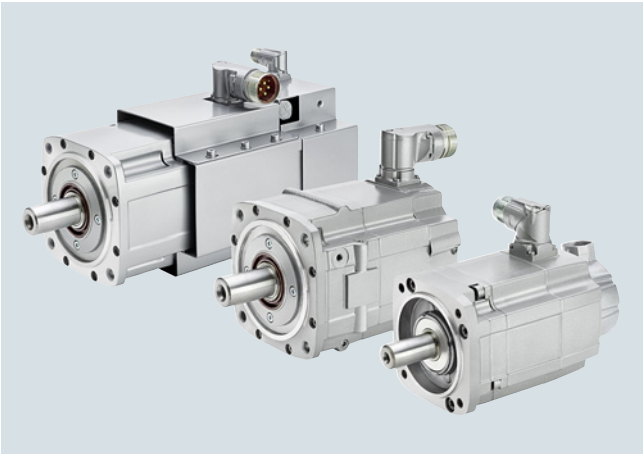

SIMOTICS S-1FT7 motors,
forced ventilation, water cooling, and natural cooling

The SIMOTICS S-1FT7 servomotors are permanent-magnet synchronous motors with very compact dimensions and an attractive design.

The S-1FT7 motors fulfill the highest standards in terms of dynamic performance, speed setting range, shaft and flange accuracy. They are equipped with state-of-the-art encoder technology and optimized for operation on our fully digital drive and control systems.

Natural cooling, forced ventilation, or water cooling are available as cooling methods. With the natural cooling method, heat is dissipated through the surface of the motor. With the forced ventilation method, heat is forced out by means of built-on fans. The water cooling method achieves maximum cooling, thereby ensuring that the motor can be operated at maximum output.

Benefits

- Excellent dynamic performance in a wide speed range thanks to high overload capability ~ 4 × M_0 with natural cooling
- Wide speed setting range
- Outstanding resistance to vibratory and shock loads thanks to vibration-isolated encoder mounting
- High degree of protection – allows operation even under demanding ambient conditions
- Quick and easy mounting due to cross-profile (up to SH 100) and rotatable connectors with quick-release locks
- Zero-backlash holding brake
- Extremely high efficiency

SIMOTICS S-1FT7 Compact motors

S-1FT7 Compact motors have a low torque ripple so that they are ideal for use in machine tool applications that require extremely high surface quality and optimum machining results. Thanks to their compact dimensions, they can be installed in confined spaces.

SIMOTICS S-1FT7 High Dynamic motors

S-1FT7 High Dynamic motors have very low rotor moments of inertia to achieve extremely good dynamic performance and very short cycle times. The motors are available with forced ventilation or water cooling and have high continuous output ratings as a result.

Application

- High-performance machine tools
- Machines with stringent requirements in terms of dynamic performance and precision, e.g.:
  - Packaging machines
  - Foil extractor machines
  - Printing machines
  - Handling equipment

More information

Some SIMOTICS S-1FT7 Compact motors are available as core types. These core types can be express delivered as replacement motors in the event of plant outages and offer the advantage of a quicker spare parts supply. For this reason, core types should be used for configuration wherever possible.

The selection and ordering data for the SINAMICS S120 Motor Modules are based on the booksize format by way of example. Other formats are also possible. The SIZER for Siemens Drives engineering tool is available for detailed configuration.

© Siemens 2022

Technical specifications

SIMOTICS S-1FT7 Compact/S-1FT7 High Dynamic	
Motor type	Permanent-magnet synchronous motor
Magnet material	Rare-earth magnetic material
Cooling	Natural cooling, forced ventilation, water cooling
Temperature monitoring	Temperature sensor in stator winding
Stator winding insulation in accordance with EN 60034-1 (IEC 60034-1)	Temperature class 155 (F) for a winding temperature rise of ΔT = 100 K at an ambient temperature of 40 °C (104 °F). For water cooling, max. inlet temperature 30 °C (86 °F). Avoid condensation.
Type of construction in accordance with EN 60034-7 (IEC 60034-7)	IM B5 (IM V1, IM V3) with recessed flange (more compact) or with a flange compatible with 1FT6/1FK7
Degree of protection in accordance with EN 60034-5 (IEC 60034-5)	IP64/IP65/IP67
Shaft extension at DE in accordance with DIN 748-3 (IEC 60072-1)	Plain shaft/feather key and keyway (half-key balancing)
Shaft and flange accuracy in accordance with DIN 42955 (IEC 60072-1) [1]	Tolerance N/tolerance R
Vibration severity in accordance with EN 60034-14 (IEC 60034-14)	Grade A is maintained up to rated speed/Grade R
Sound pressure level L_{pA} (1 m) in accordance with EN ISO 1680, max. Tolerance + 3 dB	
Natural/water cooling	
• 1FT703 ... 1FT706	65 dB
• 1FT708 ... 1FT713	70 dB
Forced ventilation	
• 1FT708 ... 1FT713	73 dB
Connection	Connectors for signals and power rotatable
Paint finish	Pearl dark gray, similar to RAL 9023
2nd rating plate	Enclosed separately
Holding brake	Without/with
Certificate of suitability	cURus

Built-in encoder systems without DRIVE-CLiQ interface

Incremental encoder	
Encoder IC2048S/R	Incremental encoder sin/cos 1 V_{pp} 2048 S/R with C and D tracks
Absolute encoder	
Encoder AM2048S/R	Absolute encoder 2048 S/R, 4096 revolutions, multi-turn

Built-in encoder systems with DRIVE-CLiQ interface

Single-turn absolute encoder [2]	
Encoder AS24DQI	Absolute encoder, single-turn, 24 bit
Multi-turn absolute encoder	
Encoder AM24DQI	Absolute encoder, 24 bit + 12 bit, multi-turn

S/R = signals/revolution

[1] Concentricity of the shaft end, coaxiality of spigot and shaft, and axial runout of the mounting flanges to the axis of the shaft end.

[2] The previously installed incremental encoder is now replaced by a single-turn absolute encoder.

© Siemens 2022

Options

Order code	Description
J..	Mounting of SP+ planetary gearbox (see SIMOTICS S geared motors)
K20	Reinforced bearing (information about validity and specification can be found in the latest configuration manual)
L03	Version for increased vibration stress (information about validity and specification can be found in the latest configuration manual)
N05	Alternative shaft geometry
N16	Version for increased chemical resistance
N40	Stainless-steel shaft and coating for increased chemical resistance (information about validity and specification can be found in the latest configuration manual)
Q12	Sealing air connection (Only in conjunction with degree of protection IP67. Not in combination with terminal box)
Q13	Customer-spec. additional sealing encoder flange, no encoder replacement in the field possible
Y84	Customer specifications on rating plate (max. 30 characters) [1]
	Paint finish
K23	Special paint finish for "Worldwide" climate group: Primer and paint finish in pearl dark gray, similar to RAL 9023
K23+X..	Special paint finish for "Worldwide" climate group: Primer and paint finish selectable from X01 to X09
K24	Primer (without paint finish)
X01	Paint finish: Jet black, matt RAL 9005
X02	Paint finish: Cream white RAL 9001
X03	Paint finish: Reseda green RAL 6011
X04	Paint finish: Pebble gray RAL 7032
X05	Paint finish: Sky blue RAL 5015
X06	Paint finish: Light ivory RAL 1015
X08	Paint finish: White aluminum
X09	Paint finish: Anthracite, similar to RAL 7016

When ordering a motor with options, **-Z** must be added to the Article No.

N05
Alternative shaft geometry

The following versions are delivered with a smaller shaft extension:

- 1FT7034-5A.71-.... /1FT7042-5A.71-....
- 1FT7062-5A.71-.... /1FT7064-5A.71-....
- 1FT7082-5A.71-.... /1FT7084-5A.71-.... /1FT7086-5A.71-....
- 1FT7102-5A.71-.... /1FT7105-5A.71-.... /1FT7108-5A.71-....

Shaft dimensions (diameter × length) according to shaft height (SH):

- SH 36: 11 × 23 mm (0.43 x 0.91 in)
- SH 48: 14 × 30 mm (0.55 x 1.18 in)
- SH 63: 19 × 40 mm (0.75 x 1.57 in)
- SH 80: 24 × 50 mm (0.94 x 1.97 in)
- SH 100: 32 × 58 mm (1.26 × 2.28 in)

N16
Version for increased chemical resistance

Please refer to the latest configuration manual for further information.

Option N16 is available only for naturally cooled and water-cooled SIMOTICS S-1FT7 motors with the following encoders:

- Encoder AS24DQI (DRIVE-CLiQ absolute encoder 24 bit single-turn)
- Encoder AM24DQI (DRIVE-CLiQ absolute encoder 24 bit + 12 bit multi-turn)
- Encoder AM2048S/R (absolute encoder 2048 S/R, 4096 revolutions multi-turn, with EnDat interface)

Option N16 is only available for motors with rotatable connector (connector sizes 1 and 1.5).

Option N16 is not available for SIMOTICS S-1FT7 motors SH 132.

[1] Additional plain text required.

© Siemens 2022

Selection and ordering data

Rated speed	Shaft height	Rated power	Static torque	Rated torque	Rated current	**SIMOTICS S-1FT7 Compact synchronous motors**	No. of pole pairs	Moment of inertia rotor (without brake)	Weight (without brake)
n_{rated}	SH	P_{rated} at ΔT=100 K	M_0 at ΔT=100 K	M_{rated} at ΔT=100 K	I_{rated} at ΔT=100 K	Core type	p	J	m
rpm		kW (hp)	Nm (lb_f-ft)	Nm (lb_f-ft)	A	Article No.		10^{-4} kgm^2 (10^{-3} lb_f-in-s^2)	kg (lb)
SIMOTICS S-1FT7 Compact for DC link voltage 510 ... 720 V DC – Natural cooling									
2000	100	5.03 (6.75)	30 (22.1)	24 (17.7)	10	**1FT7102-1AC7■-1■■1**	5	91.4 (80.9)	26.1 (57.6)
		7.96 (10.7)	50 (36.9)	38 (28.0)	15	**1FT7105-1AC7■-1■■1**	5	178 (158)	44.2 (97.5)
3000	48	1.35 (1.81)	5 (3.69)	4.3 (3.2)	2.6	**1FT7044-1AF7■-1■■1**	3	5.43 (4.81)	7.2 (15.9)
	63	1.7 (2.3)	6 (4.43)	5.4 (4.0)	3.9	**1FT7062-1AF7■-1■■1**	5	7.36 (6.51)	7.1 (15.7)
		2.39 (3.20)	9 (6.64)	7.6 (5.6)	5.2	**1FT7064-1AF7■-1■■1**	5	11.9 (10.5)	9.7 (21.4)
	80	3.24 (4.34)	13 (9.59)	10.3 (7.6)	6.6	**1FT7082-1AF7■-1■■1**	5	26.5 (23.5)	14 (30.9)
		4.56 (6.11)	20 (14.8)	14.5 (10.7)	8.5	**1FT7084-1AF7■-1■■1**	5	45.1 (39.9)	20.8 (45.9)
		5.65 (7.58)	28 (20.7)	18 (13.3)	11	**1FT7086-1AF7■-1■■1**	5	63.6 (56.3)	27.5 (60.6)
4500	80	4.82 (6.46) [1]	20 (14.8)	11.5 (8.48) [1]	10.1 [1]	**1FT7084-1AH7■-1■■1**	5	45.1 (39.9)	20.8 (45.9)
		4.71 (6.32)	28 (20.7)	10 (7.38)	10	**1FT7086-1AH7■-1■■1**	5	63.6 (56.3)	27.5 (60.6)
6000	36	0.88 (1.18)	2 (1.48)	1.4 (1.0)	2.1	**1FT7034-1AK7■-1■■1**	3	0.85 (0.75)	3.8 (8.4)
	63	2.13 (2.86) [2]	6 (4.43)	3.7 (2.73) [2]	5.9 [2]	**1FT7062-1AK7■-1■■1**	5	7.36 (6.51)	7.1 (15.7)
		2.59 (3.47) [3]	9 (6.64)	5.5 (4.06) [3]	6.1 [3]	**1FT7064-1AK7■-1■■1**	5	11.9 (10.5)	9.7 (21.4)

With DRIVE-CLiQ interface:						
	Flange:	Classic (compatible with 1FT6/1FK7)		1		
		Recessed (more compact)		0		
	Encoder:	AS24DQI encoder	RJ45 signal connection		B	
			M17 signal connection		K	
		AM24DQI encoder	RJ45 signal connection		C	
			M17 signal connection		L	
Without DRIVE-CLiQ interface:						
	Flange:	Classic (compatible with 1FT6/1FK7)		4		
		Recessed (more compact)		5		
	Encoder:	IC2048S/R encoder	M23 signal connection		N	
		AM2048S/R encoder	M23 signal connection		M	
Shaft extension:	**Shaft and flange accuracy:**		**Holding brake:**			
Plain shaft	Tolerance N		Without			G
Plain shaft	Tolerance N		With			H
Vibration severity:	**Degree of protection:**					
Grade A	IP65					1

For footnotes, see next page.

© Siemens 2022

Motor type (repeated)	Efficiency [4]	Stall current	Calculated power [8]	SINAMICS S120 Motor Module		Power cable with complete shield, Motor connection (and brake connection) via power connector		
				Rated output current [5]	**Booksize format** Internal air cooling. For further components, see SINAMICS S120 drive system	Power connector	Cable cross-section [6]	Pre-assembled cable
	η	I_0 at M_0 ΔT=100 K	P_{calc} at M_0 ΔT=100 K	I_{rated}				
	%	A	kW (hp)	A	Article No.	Size	mm²	Article No.
1FT7102-1AC7...	93	12.5	6.28 (8.42)	18	**6SL3120-■TE21-8AD0**	1.5	4 × 1.5	**6FX■002-5■N26-....**
1FT7105-1AC7...	93	18	10.47 (14.04)	18	**6SL3120-■TE21-8AD0**	1.5	4 × 2.5	**6FX■002-5■N36-....**
1FT7044-1AF7...	92	2.8	1.57 (2.11)	3	**6SL3120-■TE13-0AD0**	1	4 × 1.5	**6FX■002-5■N06-....**
1FT7062-1AF7...	91	3.9	1.88 (2.52)	5	**6SL3120-■TE15-0AD0**	1	4 × 1.5	**6FX■002-5■N06-....**
1FT7064-1AF7...	93	5.7	2.83 (3.80)	9	**6SL3120-■TE21-0AD0**	1	4 × 1.5	**6FX■002-5■N06-....**
1FT7082-1AF7...	93	7.6	4.08 (5.47)	9	**6SL3120-■TE21-0AD0**	1	4 × 1.5	**6FX■002-5■N06-....**
1FT7084-1AF7...	93	11	6.28 (8.42)	18	**6SL3120-■TE21-8AD0**	1	4 × 1.5	**6FX■002-5■N06-....**
1FT7086-1AF7...	93	15.5	8.8 (11.8)	18	**6SL3120-■TE21-8AD0**	1.5	4 × 2.5	**6FX■002-5■N36-....**
1FT7084-1AH7...	93	15.6	9.42 (12.63)	18	**6SL3120-■TE21-8AD0**	1.5	4 × 2.5	**6FX■002-5■N36-....**
1FT7086-1AH7...	91	24	13.19 (17.69)	24	**6SL3120-1TE22-4AD0**	1.5	4 × 4	**6FX■002-5■N46-....**
1FT7034-1AK7...	90	2.7	1.26 (1.69)	3	**6SL3120-■TE13-0AD0**	1	4 × 1.5	**6FX■002-5■N06-....**
1FT7062-1AK7...	90	8.4	3.77 (5.06)	9	**6SL3120-■TE21-0AD0**	1	4 × 1.5	**6FX■002-5■N06-....**
1FT7064-1AK7...	91	9	5.65 (7.58)	9	**6SL3120-■TE21-0AD0**	1	4 × 1.5	**6FX■002-5■N06-....**

Motor Module:	
Single Motor Module	**1**
Double Motor Module	**2**

Power cable:	
MOTION-CONNECT 800PLUS	**8**
MOTION-CONNECT 500	**5**
Without brake cores	**C**
With brake cores [7]	**D**
Length code	**....**

For information on the cables, refer to MOTION-CONNECT connection systems

6

[1] These values refer to n = 4000 rpm.
[2] These values refer to n = 5500 rpm.
[3] These values refer to n = 4500 rpm.
[4] Optimum efficiency in continuous duty.
[5] With default setting of the pulse frequency.
[6] The current carrying capacity of the power cables complies with EN 60204-1 for installation type C, for continuous duty at an ambient air temperature of 40 °C (104 °F).
[7] Cable cross-section for brake connection 2 × 1.5 mm².
[8]

$$P_{calc}\,[\text{kW}] = \frac{M_0\,[\text{Nm}] \times n_{rated}}{9550} \qquad P_{calc}\,[\text{hp}] = \frac{M_0\,[\text{lb}_f\text{-ft}] \times n_{rated}}{5250}$$

© Siemens 2022

Selection and ordering data

Rated speed	Shaft height	Rated power	Static torque	Rated torque	Rated current	SIMOTICS S-1FT7 Compact synchronous motors	No. of pole pairs	Moment of inertia rotor (without brake)	Weight (without brake)
n_{rated}	SH	P_{rated} at ΔT=100 K	M_0 at ΔT=100 K	M_{rated} at ΔT=100 K	I_{rated} at ΔT=100 K		p	J	m
rpm		kW (hp)	Nm (lb_f-ft)	Nm (lb_f-ft)	A	Article No.		10^{-4} kgm^2 (10^{-3} lb_f-in-s^2)	kg (lb)
SIMOTICS S-1FT7 Compact for DC link voltage 510 ... 720 V DC – Natural cooling									
1500	100	4.08 (5.47)	30 (22.1)	26 (19.2)	8	**1FT7102-5AB7■-1 ■ ■ ■**	5	91.4 (80.9)	26.1 (57.6)
		6.6 (8.9)	50 (36.9)	42 (31.0)	13	**1FT7105-5AB7■-1 ■ ■ ■**	5	178 (158)	44.2 (97.5)
		9.58 (12.85)	70 (51.6)	61 (45.0)	16	**1FT7108-5AB7■-1 ■ ■ ■**	5	248 (220)	59 (130)
	132	10.52 (14.11)	90 (66.4)	67 (49.4)	17.4	**1FT7132-5AB7■-1 ■ ■ ■**	4	459 (406)	76 (168)
		12.88 (17.27)	118 (87.0)	82 (60.5)	22.0	**1FT7134-5AB7■-1 ■ ■ ■**	4	604 (535)	92 (203)
		14.45 (19.38)	140 (103)	92 (67.9)	25.0	**1FT7136-5AB7■-1 ■ ■ ■**	4	748 (662)	108 (238)
		16.96 (22.74)	170 (125)	108 (79.7)	28.5	**1FT7138-5AB7■-■ ■ ■ ■**	4	896 (793)	124 (273)
2000	80	2.39 (3.20)	13 (9.59)	11.4 (8.4)	4.9	**1FT7082-5AC7■-1 ■ ■ ■**	5	26.5 (23.5)	14 (30.9)
		3.54 (4.75)	20 (14.8)	16.9 (12.5)	8.4	**1FT7084-5AC7■-1 ■ ■ ■**	5	45.1 (39.9)	20.8 (45.9)
		4.71 (6.32)	28 (20.7)	22.5 (16.6)	9.2	**1FT7086-5AC7■-1 ■ ■ ■**	5	63.6 (56.3)	27.5 (60.6)
	100	5.03 (6.75)	30 (22.1)	24 (17.7)	10	**1FT7102-5AC7■-1 ■ ■ ■**	5	91.4 (80.9)	26.1 (57.6)
		7.96 (10.67)	50 (36.9)	38 (28.0)	15	**1FT7105-5AC7■-1 ■ ■ ■**	5	178 (158)	44.2 (97.5)
		10.5 (14.1)	70 (51.6)	50 (36.9)	18	**1FT7108-5AC7■-1 ■ ■ ■**	5	248 (220)	59 (130)
	132	11.52 (15.45)	90 (66.4)	55 (40.6)	18.7	**1FT7132-5AC7■-1 ■ ■ ■**	4	459 (406)	76 (168)
		13.82 (18.5) [5]	118 (87.0)	66 (48.7) [5]	21 [5]	**1FT7134-5AC7■-1 ■ ■ ■**	4	604 (535)	92 (203)
		14.87 (19.9) [5]	140 (103)	71 (52.4) [5]	23.0 [5]	**1FT7136-5AC7■-■ ■ ■ ■**	4	748 (662)	109 (240)

With DRIVE-CLiQ interface:						
	Flange:	Classic (compatible with 1FT6/1FK7)		1		
		Recessed (more compact) [7]		0		
	Encoder:	AS24DQI encoder	RJ45 signal connection		B	
			M17 signal connection		K	
		AM24DQI encoder	RJ45 signal connection		C	
			M17 signal connection		L	
Without DRIVE-CLiQ interface:						
	Flange:	Classic (compatible with 1FT6/1FK7)		4		
		Recessed (more compact) [7]		5		
	Encoder:	IC2048S/R encoder	M23 signal connection		N	
		AM2048S/R encoder	M23 signal connection		M	
Connector outlet direction:		Connector sizes 1 and 1.5	Rotatable connector	1		
		Connector size 3 [1]	Transverse right	1		
			Transverse left	2		
			Axial NDE	3		
			Axial DE	4		
Terminal box/ cable entry: [1]		Top/transverse from right		5		
		Top/transverse from left		6		
		Top/axial from NDE		7		
		Top/axial from DE		8		
Shaft extension:		**Shaft and flange accuracy:**	**Holding brake:**			
Feather key and keyway		Tolerance N	Without		A	
Feather key and keyway		Tolerance N	With		B	
Feather key and keyway		Tolerance R	Without		D	
Feather key and keyway		Tolerance R	With		E	
Plain shaft		Tolerance N	Without		G	
Plain shaft		Tolerance N	With		H	
Plain shaft		Tolerance R	Without		K	
Plain shaft		Tolerance R	With		L	
Vibration severity:		**Degree of protection:**				
Grade A		IP64				0
Grade A		IP65				1
Grade A		IP67				2
Grade R		IP64				3
Grade R		IP65				4
Grade R		IP67				5

For footnotes, see next page.

© Siemens 2022

Motor type (repeated)	Efficiency [2]	Stall current	Calculated power P_{calc} [8]	SINAMICS S120 Motor Module: Rated output current [3]	Booksize format, Internal air cooling (For further components, see SINAMICS S120 drive system)	Power cable with complete shield, Motor connection (and brake connection) via power connector: Power connector	Cable cross-section [4]	Pre-assembled cable
	η	I_0 at M_0 ΔT=100 K	P_{calc} at M_0 ΔT=100 K	I_{rated}				
	%	A	kW (hp)	A	Article No.	Size	mm²	Article No.
1FT7102-5AB7...	93	9	4.71 (6.32)	9	**6SL3120-■TE21-0AD0**	1.5	4 × 1.5	**6FX■002-5■N26-....**
1FT7105-5AB7...	93	15	7.85 (10.53)	18	**6SL3120-■TE21-8AD0**	1.5	4 × 1.5	**6FX■002-5■N26-....**
1FT7108-5AB7...	93	18	10.99 (14.74)	18	**6SL3120-■TE21-8AD0**	1.5	4 × 2.5	**6FX■002-5■N36-....**
1FT7132-5AB7...	94	22.5	14.14 (18.96)	24	**6SL3120-1 TE22-4AD0**	1.5	4 × 4	**6FX■002-5■N46-....**
1FT7134-5AB7...	95	30.0	18.53 (24.85)	30	**6SL3120-1 TE23-0AD0**	1.5	4 × 6	**6FX■002-5■N54-....**
1FT7136-5AB7...	94	36.0	21.99 (29.49)	45	**6SL3120-1 TE24-5AC0**	1.5	4 × 6	**6FX■002-5■N54-....**
1FT7138-5AB7...	94	43.0	26.7 (35.8)	45	**6SL3120-1 TE24-5AC0**	3	4 × 10	**6FX■002-5■S14-....**
1FT7082-5AC7...	93	5	2.72 (3.65)	5	**6SL3120-■TE15-0AD0**	1	4 × 1.5	**6FX■002-5■N06-....**
1FT7084-5AC7...	93	9	4.19 (5.62)	9	**6SL3120-■TE21-0AD0**	1	4 × 1.5	**6FX■002-5■N06-....**
1FT7086-5AC7...	93	10.6	5.86 (7.86)	18	**6SL3120-■TE21-8AD0**	1	4 × 1.5	**6FX■002-5■N06-....**
1FT7102-5AC7...	93	12.5	6.28 (8.42)	18	**6SL3120-■TE21-8AD0**	1.5	4 × 1.5	**6FX■002-5■N26-....**
1FT7105-5AC7...	93	18	10.47 (14.04)	18	**6SL3120-■TE21-8AD0**	1.5	4 × 2.5	**6FX■002-5■N36-....**
1FT7108-5AC7...	93	25	14.66 (19.66)	30	**6SL3120-1 TE23-0AD0**	1.5	4 × 4	**6FX■002-5■N46-....**
1FT7132-5AC7...	94	29.5	18.85 (25.28)	30	**6SL3120-1 TE23-0AD0**	1.5	4 × 6	**6FX■002-5■N56-....**
1FT7134-5AC7...	95	36.0	24.71 (33.14)	45	**6SL3120-1 TE24-5AC0**	1.5	4 × 6	**6FX■002-5■N54-....**
1FT7136-5AC7...	94	43.0	29.32 (39.32)	45	**6SL3120-1 TE24-5AC0**	3	4 × 10	**6FX■002-5■S14-....**

Motor Module:	
Single Motor Module	**1**
Double Motor Module	**2**

Power cable:		
MOTION-CONNECT 800PLUS	**8**	
MOTION-CONNECT 500	**5**	
Without brake cores		**C**
With brake cores [6]		**D**
Length code		**....**

For information on the cables, refer to MOTION-CONNECT connection systems

[1] Connector size 3 not rotatable. An alternative terminal box can be selected with connector size 3 only.
[2] Optimum efficiency in continuous duty.
[3] With default setting of the pulse frequency.
[4] The current carrying capacity of the power cables complies with EN 60204-1 for installation type C, for continuous duty at an ambient air temperature of 40 °C (104 °F).
[5] Rated data are applicable with a DC link voltage of 600 to 720 V DC.
[6] Cable cross-section for brake connection 2 × 1.5 mm².
[7] Only up to SH 100.
[8]

$$P_{calc}\,[\text{kW}] = \frac{M_0\,[\text{Nm}] \times n_{rated}}{9550} \qquad P_{calc}\,[\text{hp}] = \frac{M_0\,[\text{lb}_f\text{-ft}] \times n_{rated}}{5250}$$

© Siemens 2022

Selection and ordering data

Rated speed	Shaft height	Rated power	Static torque	Rated torque	Rated current	**SIMOTICS S-1FT7 Compact synchronous motors**	No. of pole pairs	Moment of inertia rotor (without brake)	Weight (without brake)
n_{rated}	SH	P_{rated} at ΔT=100 K	M_0 at ΔT=100 K	M_{rated} at ΔT=100 K	I_{rated} at ΔT=100 K		p	J	m
rpm		kW (hp)	Nm (lb_f-ft)	Nm (lb_f-ft)	A	Article No.		10^{-4} kgm^2 (10^{-3} lb_f-in-s^2)	kg (lb)
SIMOTICS S-1FT7 Compact for DC link voltage 510 ... 720 V DC – Natural cooling									
3000	48	0.85 (1.14)	3 (2.21)	2.7 (2.0)	2.1	**1FT7042-5AF7■-1 ■ ■ ■**	3	2.81 (2.49)	4.6 (10.1)
		1.35 (1.81)	5 (3.69)	4.3 (3.2)	2.6	**1FT7044-5AF7■-1 ■ ■ ■**	3	5.43 (4.81)	7.2 (15.9)
		1.76 (2.36)	7 (5.16)	5.6 (4.1)	3.5	**1FT7046-5AF7■-1 ■ ■ ■**	3	7.52 (6.66)	9.3 (20.5)
	63	1.7 (2.3)	6 (4.43)	5.4 (4.0)	3.9	**1FT7062-5AF7■-1 ■ ■ ■**	5	7.36 (6.51)	7.1 (15.7)
		2.39 (3.20)	9 (6.64)	7.6 (5.6)	5.2	**1FT7064-5AF7■-1 ■ ■ ■**	5	11.9 (10.5)	9.7 (21.4)
		2.92 (3.92)	12 (8.85)	9.3 (6.9)	7.2	**1FT7066-5AF7■-1 ■ ■ ■**	5	16.4 (14.5)	12.3 (27.1)
		3.42 (4.59)	15 (11.1)	10.9 (8.0)	6.7	**1FT7068-5AF7■-1 ■ ■ ■**	5	23.2 (20.5)	16.3 (35.9)
	80	3.24 (4.34)	13 (9.59)	10.3 (7.6)	6.6	**1FT7082-5AF7■-1 ■ ■ ■**	5	26.5 (23.5)	14 (30.9)
		4.55 (6.10)	20 (14.8)	14.5 (10.7)	8.5	**1FT7084-5AF7■-1 ■ ■ ■**	5	45.1 (39.9)	20.8 (45.9)
		5.65 (7.58)	28 (20.7)	18 (13.3)	11	**1FT7086-5AF7■-1 ■ ■ ■**	5	63.6 (56.3)	27.5 (60.6)
	100	6.28 (8.42)	30 (22.1)	20 (14.8)	12	**1FT7102-5AF7■-1 ■ ■ ■**	5	91.4 (80.9)	26.1 (57.6)
		8.8 (11.8)	50 (36.9)	28 (20.7)	15	**1FT7105-5AF7■-1 ■ ■ ■**	5	178 (158)	44.2 (97.5)
		6.28 (8.42)	70 (51.6)	20 (14.8)	12	**1FT7108-5AF7■-1 ■ ■ ■**	5	248 (220)	59 (130)
	132	8.48 (11.37)	90 (66.4)	27 (19.9)	14	**1FT7132-5AF7■-■ ■ ■ ■**	4	459 (406)	77 (170)

With DRIVE-CLiQ interface:				
	Flange:	Classic (compatible with 1FT6/1FK7)		1
		Recessed (more compact) [6]		0
	Encoder:	AS24DQI encoder	RJ45 signal connection	B
			M17 signal connection	K
		AM24DQI encoder	RJ45 signal connection	C
			M17 signal connection	L
Without DRIVE-CLiQ interface:				
	Flange:	Classic (compatible with 1FT6/1FK7)		4
		Recessed (more compact) [6]		5
	Encoder:	IC2048S/R encoder	M23 signal connection	N
		AM2048S/R encoder	M23 signal connection	M
Connector outlet direction:		Connector sizes 1 and 1.5	Rotatable connector	1
		Connector size 3 [1]	Transverse right	1
			Transverse left	2
			Axial NDE	3
			Axial DE	4
Terminal box/ cable entry: [1]		Top/transverse from right		5
		Top/transverse from left		6
		Top/axial from NDE		7
		Top/axial from DE		8

Shaft extension:	**Shaft and flange accuracy:**	**Holding brake:**	
Feather key and keyway	Tolerance N	Without	A
Feather key and keyway	Tolerance N	With	B
Feather key and keyway	Tolerance R	Without	D
Feather key and keyway	Tolerance R	With	E
Plain shaft	Tolerance N	Without	G
Plain shaft	Tolerance N	With	H
Plain shaft	Tolerance R	Without	K
Plain shaft	Tolerance R	With	L

Vibration severity:	**Degree of protection:**	
Grade A	IP64	0
Grade A	IP65	1
Grade A	IP67	2
Grade R	IP64	3
Grade R	IP65	4
Grade R	IP67	5

For footnotes, see next page.

© Siemens 2022

Motor type (repeated)	Efficiency [2]	Stall current	Calculated power [7]	SINAMICS S120 Motor Module		Power cable with complete shield		
				Rated output current [3]	**Booksize format** Internal air cooling	Motor connection (and brake connection) via power connector		
					For further components, see SINAMICS S120 drive system			
	η	I_0 at M_0 ΔT=100 K	P_{calc} at M_0 ΔT=100 K	I_{rated}		Power connector	Cable cross-section [4]	Pre-assembled cable
	%	A	kW (hp)	A	Article No.	Size	mm²	Article No.
1FT7042-5AF7...	92	2.1	0.94 (1.26)	3	**6SL3120-■TE13-0AD0**	1	4 × 1.5	**6FX■002-5■N06-....**
1FT7044-5AF7...	92	2.8	1.57 (2.11)	3	**6SL3120-■TE13-0AD0**	1	4 × 1.5	**6FX■002-5■N06-....**
1FT7046-5AF7...	92	4	2.2 (3.0)	5	**6SL3120-■TE15-0AD0**	1	4 × 1.5	**6FX■002-5■N06-....**
1FT7062-5AF7...	91	3.9	1.88 (2.52)	5	**6SL3120-■TE15-0AD0**	1	4 × 1.5	**6FX■002-5■N06-....**
1FT7064-5AF7...	93	5.7	2.83 (3.80)	9	**6SL3120-■TE21-0AD0**	1	4 × 1.5	**6FX■002-5■N06-....**
1FT7066-5AF7...	92	8.4	3.77 (5.06)	9	**6SL3120-■TE21-0AD0**	1	4 × 1.5	**6FX■002-5■N06-....**
1FT7068-5AF7...	92	8.3	4.71 (6.32)	9	**6SL3120-■TE21-0AD0**	1	4 × 1.5	**6FX■002-5■N06-....**
1FT7082-5AF7...	93	7.6	4.08 (5.47)	9	**6SL3120-■TE21-0AD0**	1	4 × 1.5	**6FX■002-5■N06-....**
1FT7084-5AF7...	93	11	6.28 (8.42)	18	**6SL3120-■TE21-8AD0**	1	4 × 1.5	**6FX■002-5■N06-....**
1FT7086-5AF7...	93	15.5	8.8 (11.8)	18	**6SL3120-■TE21-8AD0**	1.5	4 × 2.5	**6FX■002-5■N36-....**
1FT7102-5AF7...	93	18	9.42 (12.63)	18	**6SL3120-■TE21-8AD0**	1.5	4 × 2.5	**6FX■002-5■N36-....**
1FT7105-5AF7...	94	26	15.71 (21.07)	30	**6SL3120-1 TE23-0AD0**	1.5	4 × 4	**6FX■002-5■N46-....**
1FT7108-5AF7...	93	36	21.99 (29.49)	45	**6SL3120-1 TE24-5AC0**	1.5	4 × 6	**6FX■002-5■N54-....**
1FT7132-5AF7...	94	43.5	28.27 (37.91)	45	**6SL3120-1 TE24-5AC0**	3	4 × 10	**6FX■002-5■S14-....**

Motor Module:	
Single Motor Module	**1**
Double Motor Module	**2**

Power cable:	
MOTION-CONNECT 800PLUS	**8**
MOTION-CONNECT 500	**5**
Without brake cores	**C**
With brake cores [5]	**D**
Length code	**....**

For information on the cables, refer to MOTION-CONNECT connection systems

[1] Connector size 3 not rotatable. An alternative terminal box can be selected with connector size 3 only.
[2] Optimum efficiency in continuous duty.
[3] With default setting of the pulse frequency.
[4] The current carrying capacity of the power cables complies with EN 60204-1 for installation type C, for continuous duty at an ambient air temperature of 40 °C (104 °F).
[5] Cable cross-section for brake connection 2 × 1.5 mm².
[6] Only up to SH 100.
[7]

$$P_{calc}\,[\text{kW}] = \frac{M_0\,[\text{Nm}] \times n_{rated}}{9550} \qquad P_{calc}\,[\text{hp}] = \frac{M_0\,[\text{lb}_f\text{-ft}] \times n_{rated}}{5250}$$

© Siemens 2022

Selection and ordering data

Rated speed	Shaft height	Rated power	Static torque	Rated torque	Rated current	SIMOTICS S-1FT7 Compact synchronous motors	No. of pole pairs	Moment of inertia rotor (without brake)	Weight (without brake)
n_{rated}	SH	P_{rated} at ΔT=100 K	M_0 at ΔT=100 K	M_{rated} at ΔT=100 K	I_{rated} at ΔT=100 K		p	J	m
rpm		kW (hp)	Nm (lb_f-ft)	Nm (lb_f-ft)	A	Article No.		10^{-4} kgm^2 (10^{-3} lb_f-in-s^2)	kg (lb)
SIMOTICS S-1FT7 Compact for DC link voltage 510 ... 720 V DC – Natural cooling									
4500	48	1.32 (1.77) [1]	7 (5.16)	3.6 (2.66) [1]	4.7 [1]	**1FT7046-5AH7■-1 ■ ■ ■**	3	7.52 (6.66)	9.3 (20.5)
	63	2.55 (3.42) [2]	12 (8.85)	6.1 (4.50) [2]	7.5 [2]	**1FT7066-5AH7■-1 ■ ■ ■**	5	16.4 (14.5)	12.3 (27.1)
	80	3.77 (5.06)	13 (9.6)	8 (5.90)	7.8	**1FT7082-5AH7■-1 ■ ■ ■**	5	26.5 (23.5)	14 (30.9)
		4.82 (6.46) [2]	20 (14.8)	11.5 (8.48) [2]	10.1 [2]	**1FT7084-5AH7■-1 ■ ■ ■**	5	45.1 (39.9)	20.8 (45.9)
		4.71 (6.32)	28 (20.7)	10 (7.38)	10	**1FT7086-5AH7■-1 ■ ■ ■**	5	63.6 (56.3)	27.5 (60.6)
6000	36	0.88 (1.18)	2 (1.48)	1.4 (1.03)	2.1	**1FT7034-5AK7■-1 ■ ■ ■**	3	0.85 (0.75)	3.8 (8.4)
		1.07 (1.43)	3 (2.21)	1.7 (1.25)	2.4	**1FT7036-5AK7■-1 ■ ■ ■**	3	1.33 (1.18)	5.0 (11.0)
	48	1.26 (1.69)	3 (2.21)	2 (1.48)	3	**1FT7042-5AK7■-1 ■ ■ ■**	3	2.81 (2.49)	4.6 (10.1)
		1.41 (1.89) [3]	5 (3.7)	3 (2.21) [3]	3.6 [3]	**1FT7044-5AK7■-1 ■ ■ ■**	3	5.43 (4.81)	7.2 (15.9)
	63	2.13 (2.86) [4]	6 (4.43)	3.7 (2.73) [4]	5.9 [4]	**1FT7062-5AK7■-1 ■ ■ ■**	5	7.36 (6.51)	7.1 (15.7)
		2.59 (3.47) [3]	9 (6.64)	5.5 (4.06) [3]	6.1 [3]	**1FT7064-5AK7■-1 ■ ■ ■**	5	11.9 (10.5)	9.7 (21.4)

With DRIVE-CLiQ interface:						
	Flange:	Classic (compatible with 1FT6/1FK7)		1		
		Recessed (more compact)		0		
	Encoder:	AS24DQI encoder	RJ45 signal connection		B	
			M17 signal connection		K	
		AM24DQI encoder	RJ45 signal connection		C	
			M17 signal connection		L	
Without DRIVE-CLiQ interface:						
	Flange:	Classic (compatible with 1FT6/1FK7)		4		
		Recessed (more compact)		5		
	Encoder:	IC2048S/R encoder	M23 signal connection		N	
		AM2048S/R encoder	M23 signal connection		M	

Shaft extension:	**Shaft and flange accuracy:**	**Holding brake:**	
Feather key and keyway	Tolerance N	Without	A
Feather key and keyway	Tolerance N	With	B
Feather key and keyway	Tolerance R	Without	D
Feather key and keyway	Tolerance R	With	E
Plain shaft	Tolerance N	Without	G
Plain shaft	Tolerance N	With	H
Plain shaft	Tolerance R	Without	K
Plain shaft	Tolerance R	With	L

Vibration severity:	**Degree of protection:**	
Grade A	IP64	0
Grade A	IP65	1
Grade A	IP67	2
Grade R	IP64	3
Grade R	IP65	4
Grade R	IP67	5

For footnotes, see next page.

© Siemens 2022

Motor type (repeated)	Efficiency [5]	Stall current	Calculated power [9]	SINAMICS S120 Motor Module		Power cable with complete shield		
				Rated output current [6]	**Booksize format** Internal air cooling	Motor connection (and brake connection) via power connector		
					For further components, see SINAMICS S120 drive system			
	η	I_0 at M_0 ΔT=100 K	P_{calc} at M_0 ΔT=100 K	I_{rated}		Power connector	Cable cross-section [7]	Pre-assembled cable
	%	A	kW (hp)	A	Article No.	Size	mm²	Article No.
1FT7046-5AH7...	90	8.1	3.3 (4.4)	9	**6SL3120-■TE21-0AD0**	1	4 × 1.5	**6FX■002-5■N06-....**
1FT7066-5AH7...	90	13.6	5.65 (7.58)	18	**6SL3120-■TE21-8AD0**	1	4 × 1.5	**6FX■002-5■N06-....**
1FT7082-5AH7...	93	12.3	6.13 (8.22)	18	**6SL3120-■TE21-8AD0**	1	4 × 1.5	**6FX■002-5■N06-....**
1FT7084-5AH7...	93	15.6	9.42 (12.63)	18	**6SL3120-■TE21-8AD0**	1.5	4 × 2.5	**6FX■002-5■N36-....**
1FT7086-5AH7...	91	22.4	13.19 (17.69)	24	**6SL3120-1TE22-4AD0**	1.5	4 × 4	**6FX■002-5■N46-....**
1FT7034-5AK7...	90	2.7	1.26 (1.69)	3	**6SL3120-■TE13-0AD0**	1	4 × 1.5	**6FX■002-5■N06-....**
1FT7036-5AK7...	90	4.0	1.88 (2.52)	5	**6SL3120-■TE15-0AD0**	1	4 × 1.5	**6FX■002-5■N06-....**
1FT7042-5AK7...	91	3.9	1.88 (2.52)	5	**6SL3120-■TE15-0AD0**	1	4 × 1.5	**6FX■002-5■N06-....**
1FT7044-5AK7...	91	5.7	3.14 (4.21)	9	**6SL3120-■TE21-0AD0**	1	4 × 1.5	**6FX■002-5■N06-....**
1FT7062-5AK7...	90	8.4	3.77 (5.06)	9	**6SL3120-■TE21-0AD0**	1	4 × 1.5	**6FX■002-5■N06-....**
1FT7064-5AK7...	91	9	5.65 (7.58)	9	**6SL3120-■TE21-0AD0**	1	4 × 1.5	**6FX■002-5■N06-....**

Motor Module:	
Single Motor Module	**1**
Double Motor Module	**2**

Power cable:	
MOTION-CONNECT 800PLUS	**8**
MOTION-CONNECT 500	**5**
Without brake cores	**C**
With brake cores [7] [8]	**D**
Length code	**....**

For information on the cables, refer to MOTION-CONNECT connection systems

6

1) These values refer to n = 3500 rpm.
2) These values refer to n = 4000 rpm.
3) These values refer to n = 4500 rpm.
4) These values refer to n = 5500 rpm.
5) Optimum efficiency in continuous duty.
6) With default setting of the pulse frequency.
7) The current carrying capacity of the power cables complies with EN 60204-1 for installation type C, for continuous duty at an ambient air temperature of 40 °C (104 °F).
8) Cable cross-section for brake connection 2 × 1.5 mm².
9)

$$P_{calc}\,[\text{kW}] = \frac{M_0\,[\text{Nm}] \times n_{rated}}{9550} \qquad P_{calc}\,[\text{hp}] = \frac{M_0\,[\text{lb}_f\text{-ft}] \times n_{rated}}{5250}$$

© Siemens 2022

Selection and ordering data

Rated speed	Shaft height	Rated power	Static torque	Rated torque	Rated current	SIMOTICS S-1FT7 Compact synchronous motors	No. of pole pairs	Moment of inertia rotor (without brake)	Weight (without brake)
n_{rated}	SH	P_{rated} at ΔT=100 K	M_0 at ΔT=100 K	M_{rated} at ΔT=100 K	I_{rated} at ΔT=100 K		p	J	m
rpm		kW (hp)	Nm (lb_f-ft)	Nm (lb_f-ft)	A	Article No.		10^{-4} kgm^2 (10^{-3} lb_f-in-s^2)	kg (lb)
SIMOTICS S-1FT7 Compact for DC link voltage 510 ... 720 V DC – Forced ventilation									
1500	132	20.5 (27.5)	140 (103)	132 (97.4)	45	**1FT7132-5SB7■-■ ■ ■ ■**	4	459 (406)	81 (179)
		31.4 (42.1)	235 (173)	200 (148)	60	**1FT7136-5SB7■-■ ■ ■ ■**	4	748 (662)	113 (249)
		39 (52.3)	280 (207)	250 (184)	79	**1FT7138-5SB7■-■ ■ ■ ■**	4	896 (793)	129 (284)
2000	80	5.0 (6.7)	27 (19.9)	24 (17.7)	13.5	**1FT7084-5SC7■-1 ■ ■ ■**	5	45 (39.8)	25 (55.1)
		6.7 (9.0)	36 (26.6)	32 (23.6)	17	**1FT7086-5SC7■-1 ■ ■ ■**	5	64 (56.6)	36 (79.4)
	100	11.7 (15.7)	65 (47.9)	56 (41.3)	29	**1FT7105-5SC7■-1 ■ ■ ■**	5	178 (158)	50 (110)
		15.3 (20.5)	91 (67.1)	73 (53.8)	33	**1FT7108-5SC7■-1 ■ ■ ■**	5	248 (220)	64 (141)
	132	26.5 (35.5)	140 (103)	126 (92.9)	55	**1FT7132-5SC7■-■ ■ ■ ■**	4	459 (406)	81 (179)
		33.5 (44.9)	190 (140)	160 (118)	73	**1FT7134-5SC7■-■ ■ ■ ■**	4	604 (535)	97 (214)
		39.8 (53.4)	235 (173)	190 (140)	81	**1FT7136-5SC7■-■ ■ ■ ■**	4	748 (662)	113 (249)
3000	80	7.2 (9.7)	27 (19.9)	23 (17.0)	18.5	**1FT7084-5SF7■-1 ■ ■ ■**	5	45 (39.8)	25 (55.1)
		9.1 (12.2)	36 (26.6)	29 (21.4)	24	**1FT7086-5SF7■-1 ■ ■ ■**	5	64 (56.6)	36 (79.4)
	100	15.1 (20.2)	65 (47.9)	48 (35.4)	35	**1FT7105-5SF7■-■ ■ ■ ■**	5	178 (158)	50 (110)
		18.8 (25.2)	91 (67.1)	60 (44.3)	38	**1FT7108-5SF7■-■ ■ ■ ■**	5	248 (220)	64 (141)
	132	35.5 (47.6)	140 (103)	113 (83.3)	69	**1FT7132-5SF7■-■ ■ ■ ■**	4	459 (406)	81 (179)
		45.5 (61.0)	190 (140)	145 (107)	91	**1FT7134-5SF7■-■ ■ ■ ■**	4	604 (535)	97 (214)
4500	80	9.9 (13.3)	27 (19.9)	21 (15.5)	24.5	**1FT7084-5SH7■-1 ■ ■ ■**	5	45 (39.8)	25 (55.1)
		11.8 (15.8)	36 (26.6)	25 (18.4)	25	**1FT7086-5SH7■-1 ■ ■ ■**	5	64 (56.6)	36 (79.4)

With DRIVE-CLiQ interface:				
Flange:	Classic (compatible with 1FT6/1FK7)		1	
	Recessed (more compact)		0	
Encoder:	AS24DQI encoder	RJ45 signal connection		B
	AM24DQI encoder	RJ45 signal connection		C
Without DRIVE-CLiQ interface:				
Flange:	Classic (compatible with 1FT6/1FK7)		4	
	Recessed (more compact)		5	
Encoder:	IC2048S/R encoder	M23 signal connection		N
	AM2048S/R encoder	M23 signal connection		M

Connector outlet direction:	Connector sizes 1 and 1.5	Rotatable connector	1
	Connector size 3 [1]	Transverse right	1
		Transverse left	2
		Axial NDE	3
		Axial DE	4
Terminal box/ cable entry: [1]	Top/transverse from right		5
	Top/transverse from left		6
	Top/axial from NDE		7
	Top/axial from DE		8

Shaft extension:	**Shaft and flange accuracy:**	**Holding brake:** [8]	
Feather key	Tolerance N	Without	A
Feather key	Tolerance N	With	B
Feather key	Tolerance R	Without	D
Feather key	Tolerance R	With	E
Plain shaft	Tolerance N	Without	G
Plain shaft	Tolerance N	With	H
Plain shaft	Tolerance R	Without	K
Plain shaft	Tolerance R	With	L

Vibration severity:	**Degree of protection:** [2]	
Grade A	IP64	0
Grade A	IP65	1
Grade R	IP64	3
Grade R	IP65	4

For footnotes, see next page.

© Siemens 2022

Motor type (repeated)	Efficiency [3]	Stall current	Calculated power P_{calc} [9]	SINAMICS S120 Motor Module: Rated output current [4]	Booksize format, Internal air cooling: For further components, see SINAMICS S120 drive system	Power cable with complete shield, Motor connection (and brake connection) via power connector: Power connector	Cable cross-section [5]	Pre-assembled cable
	η	I_0 at M_0 ΔT=100 K	P_{calc} at M_0 ΔT=100 K	I_{rated}				
	%	A	kW (hp)	A	Article No.	Size	mm²	Article No.
1FT7132-5SB7...	94	48	22 (29.5)	45	**6SL3120-1TE24-5AC0**	3	4 × 10	**6FX■0■2-5DS17-....**
1FT7136-5SB7...	95	70	36.9 (49.5)	85	**6SL3120-1TE28-5AA3**	3	4 × 25	**6FX■002-5DG33-....**
1FT7138-5SB7...	95	85	44 (59.0)	85	**6SL3120-1TE28-5AA3**	3	4 × 35	**6FX■002-5DG53-....**
1FT7084-5SC7...	93	15	5.7 (7.6)	18	**6SL3120-■TE21-8AD0**	1.5	4 × 1.5	**6FX■002-5■N26-....**
1FT7086-5SC7...	93	19.5	7.5 (10.1)	24	**6SL3120-1TE22-4AD0**	1.5	4 × 2.5	**6FX■002-5■N36-....**
1FT7105-5SC7...	93	31	13.6 (18.2)	45	**6SL3120-1TE24-5AC0**	1.5	4 × 6	**6FX■002-5■N54-....**
1FT7108-5SC7...	93	39	19.1 (25.6)	45	**6SL3120-1TE24-5AC0**	1.5	4 × 10	**6FX■002-5■N64-....**
1FT7132-5SC7...	95	60	29.3 (39.3)	60	**6SL3120-1TE26-0AC0**	3	4 × 16	**6FX■002-5DS23-....**
1FT7134-5SC7...	95	85	39.8 (53.4)	85	**6SL3120-1TE28-5AA3**	3	4 × 35	**6FX■002-5DG53-....**
1FT7136-5SC7...	95	98	49.2 (66.0)	132	**6SL3120-1TE31-3AA3**	E. c. [7]	4 × 35	**6FX5002-5CR73-....**
1FT7084-5SF7...	94	21	8.5 (11.4)	24	**6SL3120-1TE22-4AD0**	1.5	4 × 2.5	**6FX■002-5■N36-....**
1FT7086-5SF7...	93	29	11.3 (15.2)	30	**6SL3120-1TE23-0AD0**	1.5	4 × 6	**6FX■002-5■N56-....**
1FT7105-5SF7...	94	45	20.4 (27.4)	45	**6SL3120-1TE24-5AC0**	3	4 × 10	**6FX■002-5■S14-....**
1FT7108-5SF7...	94	57	28.6 (38.4)	60	**6SL3120-1TE26-0AC0**	3	4 × 16	**6FX■002-5■S23-....**
1FT7132-5SF7...	95	85	44 (59.0)	85	**6SL3120-1TE28-5AA3**	3	4 × 35	**6FX■002-5DG53-....**
1FT7134-5SF7...	96	115	59.7 (80.1)	132	**6SL3120-1TE31-3AA3**	E. c. [7]	4 × 50	**6FX5002-5CR83-....**
1FT7084-5SH7...	94	30.5	12.7 (17.0)	30	**6SL3120-1TE23-0AD0**	1.5	4 × 6	**6FX■002-5■N56-....**
1FT7086-5SH7...	93	34	17.0 (22.8)	45	**6SL3120-1TE24-5AC0**	1.5	4 × 6	**6FX■002-5■N54-....**

Motor Module:	
Single Motor Module	**1**
Double Motor Module	**2**

Power cable:		
MOTION-CONNECT 800PLUS	**8**	
MOTION-CONNECT 500	**5**	
Without brake cores		**C**
With brake cores [6] [8]		**D**
Length code		**....**

For information on the cables, refer to MOTION-CONNECT connection systems

[1] Connector size 3 not rotatable. An alternative terminal box can be selected with connector size 3 only. 1FT7136-5SC7.-.... and 1FT7134-5SF7.-.... only with terminal box.

[2] The degree of protection refers to the motor. The built-in fan achieves degree of protection IP54/IP55 (shaft height 132).

[3] Optimum efficiency in continuous duty.

[4] With default setting of the pulse frequency.

[5] The current carrying capacity of the power cable complies with EN 60204-1 for installation type C, for continuous duty at an ambient air temperature of 40 °C (104 °F).

[6] Cable cross-section for brake connection 2 × 1.5 mm².

[7] E. c. exposed core ends. Only in combination with terminal box.

[8] Holding brake not for 1FT7138-5SB7.-....

[9]
$$P_{calc}\,[\text{kW}] = \frac{M_0\,[\text{Nm}] \times n_{rated}}{9550} \qquad P_{calc}\,[\text{hp}] = \frac{M_0\,[\text{lb}_f\text{-ft}] \times n_{rated}}{5250}$$

© Siemens 2022

Selection and ordering data

Rated speed	Shaft height	Rated power	Static torque	Rated torque	Rated current	SIMOTICS S-1FT7 Compact synchronous motors	No. of pole pairs	Moment of inertia rotor (without brake)	Weight (without brake)
n_{rated}	SH	P_{rated} at ΔT=100 K	M_0 at ΔT=100 K	M_{rated} at ΔT=100 K	I_{rated} at ΔT=100 K		p	J	m
rpm		kW (hp)	Nm (lb_f-ft)	Nm (lb_f-ft)	A	Article No.		10^{-4} kgm^2 (10^{-3} lb_f-in-s^2)	kg (lb)
SIMOTICS S-1FT7 Compact for DC link voltage 510 ... 720 V DC – Water cooling									
1500	100	7.9 (10.6)	50 (36.9)	50 (36.9)	20.3	**1FT7102-5WB7■-1 ■ ■ ■**	5	98.9 (87.5)	36.6 (80.7)
		14.1 (18.9)	90 (66.4)	90 (66.4)	29.5	**1FT7105-5WB7■-1 ■ ■ ■**	5	191 (169)	54.8 (120.8)
		19.6 (26.3)	125 (92.2)	125 (92.2)	40.3	**1FT7108-5WB7■-1 ■ ■ ■**	5	265 (235)	68.6 (151.3)
2000	80	4.4 (5.9)	21 (15.5)	21 (15.5)	11	**1FT7082-5WC7■-1 ■ ■ ■**	5	28.9 (25.6)	20.7 (45.6)
		7.33 (9.83)	35 (25.8)	35 (25.8)	17	**1FT7084-5WC7■-1 ■ ■ ■**	5	48.3 (42.8)	27.5 (60.6)
		10.5 (14.1)	50 (36.9)	50 (36.9)	24	**1FT7086-5WC7■-1 ■ ■ ■**	5	67.8 (60.0)	34.1 (75.2)
	100	10.4 (13.9)	50 (36.9)	49.5 (36.5)	29.3	**1FT7102-5WC7■-1 ■ ■ ■**	5	98.9 (87.5)	36.6 (80.7)
		18.8 (25.2)	90 (66.4)	90 (66.4)	40.8	**1FT7105-5WC7■-1 ■ ■ ■**	5	191 (169)	54.8 (120.8)
		26.2 (35.1)	125 (92.2)	125 (92.2)	47.5	**1FT7108-5WC7■-■ ■ ■ ■**	5	265 (235)	69.6 (153.5)

With DRIVE-CLiQ interface:						
	Flange:	Classic (compatible with 1FT6/1FK7)		1		
		Recessed (more compact)		0		
	Encoder:	AS24DQI encoder	RJ45 signal connection		B	
			M17 signal connection		K	
		AM24DQI encoder	RJ45 signal connection		C	
			M17 signal connection		L	
Without DRIVE-CLiQ interface:						
	Flange:	Classic (compatible with 1FT6/1FK7)		4		
		Recessed (more compact)		5		
	Encoder:	IC2048S/R encoder	M23 signal connection		N	
		AM2048S/R encoder	M23 signal connection		M	
Connector outlet direction:		Connector sizes 1 and 1.5	Rotatable connector		1	
		Connector size 3 [1]	Transverse right		1	
			Transverse left		2	
			Axial NDE		3	
			Axial DE		4	
Terminal box/ cable entry: [1]		Top/transverse from right			5	
		Top/transverse from left			6	
		Top/axial from NDE			7	
		Top/axial from DE			8	

Shaft extension:	**Shaft and flange accuracy:**	**Holding brake:**	
Feather key and keyway	Tolerance N	Without	A
Feather key and keyway	Tolerance N	With	B
Feather key and keyway	Tolerance R	Without	D
Feather key and keyway	Tolerance R	With	E
Plain shaft	Tolerance N	Without	G
Plain shaft	Tolerance N	With	H
Plain shaft	Tolerance R	Without	K
Plain shaft	Tolerance R	With	L

Vibration severity:	**Degree of protection:**	
Grade A	IP64	0
Grade A	IP65	1
Grade A	IP67	2
Grade R	IP64	3
Grade R	IP65	4
Grade R	IP67	5

For footnotes, see next page.

© Siemens 2022

Motor type (repeated)	Efficiency [2]	Stall current	Calculated power P_{calc} [6]	SINAMICS S120 Motor Module: Rated output current [3]	SINAMICS S120 Motor Module: **Booksize format** Internal air cooling. For further components, see SINAMICS S120 drive system	Power cable with complete shield, Motor connection (and brake connection) via power connector: Power connector	Cable cross-section [4]	Pre-assembled cable
	η	I_0 at M_0 ΔT=100 K	P_{calc} at M_0 ΔT=100 K	I_{rated}				
	%	A	kW (hp)	A	Article No.	Size	mm²	Article No.
1FT7102-5WB7...	93	17.8	7.9 (10.6)	18	**6SL3120-■TE21-8AD0**	1.5	4 × 2.5	**6FX■002-5■N36-....**
1FT7105-5WB7...	94	28	14.1 (18.9)	30	**6SL3120-1TE23-0AD0**	1.5	4 × 4	**6FX■002-5■N46-....**
1FT7108-5WB7...	94	39	19.6 (26.3)	45	**6SL3120-1TE24-5AC0**	1.5	4 × 10	**6FX■002-5■N64-....**
1FT7082-5WC7...	93	10.7	4.4 (5.9)	18	**6SL3120-■TE21-8AD0**	1.5	4 × 1.5	**6FX■002-5■N26-....**
1FT7084-5WC7...	94	16.5	7.3 (9.8)	18	**6SL3120-■TE21-8AD0**	1.5	4 × 2.5	**6FX■002-5■N36-....**
1FT7086-5WC7...	94	23	10.5 (14.1)	24	**6SL3120-1TE22-4AD0**	1.5	4 × 4	**6FX■002-5■N46-....**
1FT7102-5WC7...	94	25.5	10.5 (14.1)	30	**6SL3120-1TE23-0AD0**	1.5	4 × 4	**6FX■002-5■N46-....**
1FT7105-5WC7...	94	39	18.8 (25.2)	45	**6SL3120-1TE24-5AC0**	1.5	4 × 10	**6FX■002-5■N64-....**
1FT7108-5WC7...	95	45.3	26.2 (35.1)	45	**6SL3120-1TE24-5AC0**	3	4 × 10	**6FX■002-5■S14-....**

Motor Module:	
Single Motor Module	**1**
Double Motor Module	**2**

Power cable:	
MOTION-CONNECT 800PLUS	**8**
MOTION-CONNECT 500	**5**
Without brake cores	**C**
With brake cores [5]	**D**
Length code	**....**

For information on the cables, refer to MOTION-CONNECT connection systems

[1] Connector size 3 not rotatable. An alternative terminal box can be selected with connector size 3 only.
[2] Optimum efficiency in continuous duty.
[3] With default setting of the pulse frequency.
[4] The current carrying capacity of the power cables complies with EN 60204-1 for installation type C, for continuous duty at an ambient air temperature of 40 °C (104 °F).
[5] Cable cross-section for brake connection 2 × 1.5 mm².
[6]

$$P_{calc}\,[\text{kW}] = \frac{M_0\,[\text{Nm}] \times n_{rated}}{9550} \qquad P_{calc}\,[\text{hp}] = \frac{M_0\,[\text{lb}_f\text{-ft}] \times n_{rated}}{5250}$$

© Siemens 2022

Selection and ordering data

Rated speed	Shaft height	Rated power	Static torque	Rated torque	Rated current	SIMOTICS S-1FT7 Compact synchronous motors	No. of pole pairs	Moment of inertia rotor (without brake)	Weight (without brake)
n_{rated}	SH	P_{rated} at ΔT=100 K	M_0 at ΔT=100 K	M_{rated} at ΔT=100 K	I_{rated} at ΔT=100 K		p	J	m
rpm		kW (hp)	Nm (lb_f-ft)	Nm (lb_f-ft)	A	Article No.		10^{-4} kgm^2 (10^{-3} lb_f-in-s^2)	kg (lb)
SIMOTICS S-1FT7 Compact for DC link voltage 510 ... 720 V DC – Water cooling									
3000	63	3.1 (4.2)	10 (7.38)	10 (7.38)	7.8	**1FT7062-5WF7■-1 ■ ■ ■**	5	8.1 (7.2)	11 (24.3)
		5 (6.71)	16 (11.8)	16 (11.8)	12.5	**1FT7064-5WF7■-1 ■ ■ ■**	5	12.9 (11.4)	13.7 (30.2)
		6.2 (8.3)	20 (14.8)	19.6 (14.5)	14.4	**1FT7066-5WF7■-1 ■ ■ ■**	5	17.7 (15.7)	16.3 (35.9)
		9.3 (12.5)	30 (22.1)	29.5 (21.8)	19.6	**1FT7068-5WF7■-1 ■ ■ ■**	5	24.8 (22.0)	20.1 (44.3)
	80	6.4 (8.6)	21 (15.5)	20.5 (15.1)	16	**1FT7082-5WF7■-1 ■ ■ ■**	5	28.9 (25.6)	20.7 (45.6)
		11 (14.8)	35 (25.8)	35 (25.8)	24.2	**1FT7084-5WF7■-1 ■ ■ ■**	5	48.3 (42.8)	27.5 (60.6)
		15.4 (20.7)	50 (36.9)	49 (36.1)	36	**1FT7086-5WF7■-1 ■ ■ ■**	5	67.8 (60.0)	34.1 (75.2)
	100	14.3 (19.2)	50 (36.9)	45.5 (33.6)	38.8	**1FT7102-5WF7■-1 ■ ■ ■**	5	98.9 (87.5)	36.6 (80.7)
		24.8 (33.3)	90 (66.4)	79 (58.3)	49.5	**1FT7105-5WF7■-■ ■ ■ ■**	5	164 (145)	55.9 (123.3)
		34.2 (45.9)	125 (92.2)	109 (80.4)	60	**1FT7108-5WF7■-■ ■ ■ ■**	5	265 (235)	69.6 (153.5)
4500	63	9.1 (12.2)	20 (14.8)	19.4 (14.3)	20.8	**1FT7066-5WH7■-1 ■ ■ ■**	5	17.7 (15.7)	16.3 (35.9)
	80	8.95 (12.00)	21 (15.5)	19 (14.0)	23.9	**1FT7082-5WH7■-1 ■ ■ ■**	5	28.9 (25.6)	20.7 (45.6)
		15.08 (20.22)	35 (25.8)	32 (23.6)	34.5	**1FT7084-5WH7■-1 ■ ■ ■**	5	48.3 (42.8)	27.5 (60.6)
		20.3 (27.2)	50 (36.9)	43 (31.7)	38	**1FT7086-5WH7■-1 ■ ■ ■**	5	67.8 (60.0)	34.1 (75.2)
6000	63	5.8 (7.8)	10 (7.38)	9.2 (6.8)	12.7	**1FT7062-5WK7■-1 ■ ■ ■**	5	8.1 (7.2)	11 (24.3)
		8.9 (11.9)	16 (11.8)	14.2 (10.5)	20	**1FT7064-5WK7■-1 ■ ■ ■**	5	12.9 (11.4)	13.7 (30.2)

With DRIVE-CLiQ interface:				
	Flange:	Classic (compatible with 1FT6/1FK7)		1
		Recessed (more compact)		0
	Encoder:	AS24DQI encoder	RJ45 signal connection	B
			M17 signal connection	K
		AM24DQI encoder	RJ45 signal connection	C
			M17 signal connection	L
Without DRIVE-CLiQ interface:				
	Flange:	Classic (compatible with 1FT6/1FK7)		4
		Recessed (more compact)		5
	Encoder:	IC2048S/R encoder	M23 signal connection	N
		AM2048S/R encoder	M23 signal connection	M

Connector outlet direction:	Connector sizes 1 and 1.5	Rotatable connector	1
	Connector size 3 [1]	Transverse right	1
		Transverse left	2
		Axial NDE	3
		Axial DE	4
Terminal box/ cable entry: [1]	Top/transverse from right		5
	Top/transverse from left		6
	Top/axial from NDE		7
	Top/axial from DE		8

Shaft extension:	**Shaft and flange accuracy:**	**Holding brake:**	
Feather key and keyway	Tolerance N	Without	A
Feather key and keyway	Tolerance N	With	B
Feather key and keyway	Tolerance R	Without	D
Feather key and keyway	Tolerance R	With	E
Plain shaft	Tolerance N	Without	G
Plain shaft	Tolerance N	With	H
Plain shaft	Tolerance R	Without	K
Plain shaft	Tolerance R	With	L

Vibration severity:	**Degree of protection:**	
Grade A	IP64	0
Grade A	IP65	1
Grade A	IP67	2
Grade R	IP64	3
Grade R	IP65	4
Grade R	IP67	5

For footnotes, see next page.

© Siemens 2022

Motor type (repeated)	Efficiency [2]	Stall current	Calculated power [7]	SINAMICS S120 Motor Module		Power cable with complete shield Motor connection (and brake connection) via power connector		
				Rated output current [3]	**Booksize format** Internal air cooling For further components, see SINAMICS S120 drive system	Power connector	Cable cross-section [4]	Pre-assembled cable
	η	I_0 at M_0 ΔT=100 K	P_{calc} at M_0 ΔT=100 K	I_{rated}		Size	mm²	
	%	A	kW (hp)	A	Article No.	Size	mm²	Article No.
1FT7062-5WF7...	91	7.4	3.1 (4.2)	9	**6SL3120-■TE21-0AD0**	1	4 × 1.5	**6FX■002-5■N06-....**
1FT7064-5WF7...	91	11.9	5.0 (6.7)	18	**6SL3120-■TE21-8AD0**	1	4 × 1.5	**6FX■002-5■N06-....**
1FT7066-5WF7...	91	14	6.3 (8.4)	18	**6SL3120-■TE21-8AD0**	1	4 × 1.5	**6FX■002-5■N06-....**
1FT7068-5WF7...	93	19	9.4 (12.6)	18 [5]	**6SL3120-■TE21-8AD0**	1	4 × 2.5	**6FX■002-5■N16-....**
1FT7082-5WF7...	94	16	6.6 (8.9)	18	**6SL3120-■TE21-8AD0**	1.5	4 × 2.5	**6FX■002-5■N36-....**
1FT7084-5WF7...	94	24	11.0 (14.8)	24	**6SL3120-1TE22-4AD0**	1.5	4 × 4	**6FX■002-5■N46-....**
1FT7086-5WF7...	94	34	15.7 (21.1)	45	**6SL3120-1TE24-5AC0**	1.5	4 × 6	**6FX■002-5■N54-....**
1FT7102-5WF7...	95	40	15.7 (21.1)	45	**6SL3120-1TE24-5AC0**	1.5	4 × 10	**6FX■002-5■N64-....**
1FT7105-5WF7...	94	53.2	28.3 (38.0)	60	**6SL3120-1TE26-0AC0**	3	4 × 16	**6FX■002-5■S23-....**
1FT7108-5WF7...	95	65	39.3 (52.7)	85	**6SL3120-1TE28-5AA3**	3	4 × 16	**6FX■002-5■G23-....**
1FT7066-5WH7...	91	19.7	9.4 (12.6)	24	**6SL3120-1TE22-4AD0**	1	4 × 2.5	**6FX■002-5■N16-....**
1FT7082-5WH7...	94	24	9.9 (13.3)	24	**6SL3120-1TE22-4AD0**	1.5	4 × 4	**6FX■002-5■N46-....**
1FT7084-5WH7...	94	34.3	16.5 (22.1)	45	**6SL3120-1TE24-5AC0**	1.5	4 × 6	**6FX■002-5■N54-....**
1FT7086-5WH7...	94	40.5	23.6 (31.6)	45	**6SL3120-1TE24-5AC0**	1.5	4 × 10	**6FX■002-5■N64-....**
1FT7062-5WK7...	92	12.5	6.3 (8.4)	18	**6SL3120-■TE21-8AD0**	1	4 × 1.5	**6FX■002-5■N06-....**
1FT7064-5WK7...	92	20.2	10.1 (13.5)	24	**6SL3120-1TE22-4AD0**	1	4 × 2.5	**6FX■002-5■N16-....**

Motor Module:	
Single Motor Module	**1**
Double Motor Module	**2**

Power cable:		
MOTION-CONNECT 800PLUS	**8**	
MOTION-CONNECT 500	**5**	
Without brake cores		**C**
With brake cores [6]		**D**
Length code		**....**

For information on the cables, refer to MOTION-CONNECT connection systems

[1] Connector size 3 is not rotatable. An alternative terminal box can be selected with connector size 3 only.

[2] Optimum efficiency in continuous duty.

[3] With default setting of the pulse frequency.

[4] The current carrying capacity of the power cables complies with EN 60204-1 for installation type C, for continuous duty at an ambient air temperature of 40 °C (104 °F).

[5] With the specified Motor Module, the motor cannot be fully utilized at M_0 with a winding temperature rise of ΔT = 100 K. If a Motor Module with a higher rating is used, you must check whether the specified power cable can be connected to the larger Motor Module.

[6] Cable cross-section for brake connection 2 × 1.5 mm².

[7]
$$P_{calc}\,[\text{kW}] = \frac{M_0\,[\text{Nm}] \times n_{rated}}{9550} \qquad P_{calc}\,[\text{hp}] = \frac{M_0\,[\text{lb}_f\text{-ft}] \times n_{rated}}{5250}$$

© Siemens 2022

SIMOTICS S-1FT7 High Dynamic – Forced ventilation/Water cooling

Selection and ordering data

Rated speed	Shaft height	Rated power	Static torque	Rated torque	Rated current	SIMOTICS S-1FT7 High Dynamic synchronous motors	No. of pole pairs	Moment of inertia rotor (without brake)	Weight (without brake)
n_{rated}	SH	P_{rated} at ΔT=100 K	M_0 at ΔT=100 K	M_{rated} at ΔT=100 K	I_{rated} at ΔT=100 K		p	J	m
rpm		kW (hp)	Nm (lb_f-ft)	Nm (lb_f-ft)	A	Article No.		10^{-4} kgm^2 (10^{-3} lb_f-in-s^2)	kg (lb)
SIMOTICS S-1FT7 High Dynamic for DC link voltage 510 ... 720 V DC – Forced ventilation									
3000	63	3.8 (5.1)	14 (10.3)	12 (8.85)	10.5	**1FT7065-7SF7■-1■■■**	5	6.4 (5.7)	19 (41.9)
		4.4 (5.9)	17 (12.5)	14 (10.3)	13	**1FT7067-7SF7■-1■■■**	5	8.3 (7.3)	23 (50.7)
	80	7.2 (9.7)	34 (25.1)	23 (17.0)	20	**1FT7085-7SF7■-1■■■**	5	20.7 (18.3)	34 (75.0)
		10.4 (13.9)	48 (35.4)	33 (24.3)	29	**1FT7087-7SF7■-1■■■**	5	27.4 (24.3)	42 (92.6)
4500	63	5.2 (7.0)	14 (10.3)	11 (8.11)	13.5	**1FT7065-7SH7■-1■■■**	5	6.4 (5.7)	19 (41.9)
		6.1 (8.2)	17 (12.5)	13 (9.59)	15	**1FT7067-7SH7■-1■■■**	5	8.3 (7.3)	23 (50.7)
	80	8.2 (11.0)	34 (25.1)	17.5 (12.9)	22.5	**1FT7085-7SH7■-1■■■**	5	20.7 (18.3)	34 (75.0)
		10.8 (14.5)	48 (35.4)	23 (17.0)	24	**1FT7087-7SH7■-■■■■**	5	27.4 (24.3)	43 (94.8)
SIMOTICS S-1FT7 High Dynamic for DC link voltage 510 ... 720 V DC – Water cooling									
3000	63	5.7 (7.6)	19 (14.0)	18 (13.3)	15	**1FT7065-7WF7■-1■■■**	5	6.4 (5.7)	16 (35.3)
		7.4 (9.9)	25 (18.4)	23.5 (17.3)	21	**1FT7067-7WF7■-1■■■**	5	8.3 (7.3)	22 (48.5)
	80	11.9 (16.0)	43 (31.7)	38 (28.0)	32	**1FT7085-7WF7■-1■■■**	5	20.7 (18.3)	32 (70.6)
		16.0 (21.5)	61 (45.0)	51 (37.6)	43	**1FT7087-7WF7■-■■■■**	5	27.4 (24.3)	41 (90.4)
4500	63	7.8 (10.5)	19 (14.0)	16.5 (12.2)	20	**1FT7065-7WH7■-1■■■**	5	6.4 (5.7)	16 (35.3)
		10.4 (13.9)	25 (18.4)	22 (16.2)	25	**1FT7067-7WH7■-1■■■**	5	8.3 (7.3)	22 (48.5)
	80	15.6 (20.9)	43 (31.7)	33 (24.3)	48	**1FT7085-7WH7■-■■■■**	5	20.7 (18.3)	32 (70.6)
		21.7 (29.1)	61 (45.0)	46 (33.9)	53	**1FT7087-7WH7■-■■■■**	5	27.4 (24.3)	41 (90.4)

With DRIVE-CLiQ interface:				
Flange:	Classic (compatible with 1FT6/1FK7)		1	
	Recessed (more compact)		0	
Encoder:	AS24DQI encoder	RJ45 signal connection		B
		M17 signal connection (Only for water cooling)		K
	AM24DQI encoder	RJ45 signal connection		C
		M17 signal connection (Only for water cooling)		L
Without DRIVE-CLiQ interface:				
Flange:	Classic (compatible with 1FT6/1FK7)		4	
	Recessed (more compact)		5	
Encoder:	IC2048S/R encoder	M23 signal connection		N
	AM2048S/R encoder	M23 signal connection		M

Connector outlet direction:	Connector sizes 1 and 1.5	Rotatable connector	1
	Connector size 3 [1]	Transverse right	1
		Transverse left	2
		Axial NDE	3
		Axial DE	4
Terminal box/ cable entry: [1]	Top/transverse from right		5
	Top/transverse from left		6
	Top/axial from NDE		7
	Top/axial from DE		8

Shaft extension:	**Shaft and flange accuracy:**	**Holding brake:**	
Feather key and keyway	Tolerance N	Without	A
Feather key and keyway	Tolerance N	With	B
Feather key and keyway	Tolerance R	Without	D
Feather key and keyway	Tolerance R	With	E
Plain shaft	Tolerance N	Without	G
Plain shaft	Tolerance N	With	H
Plain shaft	Tolerance R	Without	K
Plain shaft	Tolerance R	With	L

Vibration severity:	**Degree of protection:**	
Grade A	IP64	0
Grade A	IP65	1
Grade A	IP67 (only for water cooling)	2
Grade R	IP64	3
Grade R	IP65	4
Grade R	IP67 (only for water cooling)	5

For footnotes, see next page.

© Siemens 2022

Motor type (repeated)	Efficiency [2]	Stall current	Calculated power P_{calc} [6]	SINAMICS S120 Motor Module: Rated output current [3]	Booksize format, Internal air cooling: For further components, see SINAMICS S120 drive system	Power cable with complete shield, Motor connection (and brake connection) via power connector: Power connector	Cable cross-section [4]	Pre-assembled cable
	η	I_0 at M_0 ΔT=100 K	P_{calc} at M_0 ΔT=100 K	I_{rated}				
	%	A	kW (hp)	A	Article No.	Size	mm²	Article No.
1FT7065-7SF7...	92	12	4.4 (5.9)	18	**6SL3120-■TE21-8AD0**	1.5	4 × 1.5	**6FX■002-5■N26-....**
1FT7067-7SF7...	94	15	5.3 (7.1)	18	**6SL3120-■TE21-8AD0**	1.5	4 × 1.5	**6FX■002-5■N26-....**
1FT7085-7SF7...	92	28	10.7 (14.3)	30	**6SL3120-1TE23-0AD0**	1.5	4 × 4	**6FX■002-5■N46-....**
1FT7087-7SF7...	93	40	15.1 (20.2)	45	**6SL3120-1TE24-5AC0**	1.5	4 × 10	**6FX■002-5■N64-....**
1FT7065-7SH7...	92	16	6.6 (8.9)	18	**6SL3120-■TE21-8AD0**	1.5	4 × 2.5	**6FX■002-5■N36-....**
1FT7067-7SH7...	94	19	8.0 (10.7)	24	**6SL3120-1TE22-4AD0**	1.5	4 × 2.5	**6FX■002-5■N36-....**
1FT7085-7SH7...	92	40	16.0 (21.5)	45	**6SL3120-1TE24-5AC0**	1.5	4 × 10	**6FX■002-5■N64-....**
1FT7087-7SH7...	93	45	22.6 (30.3)	45	**6SL3120-1TE24-5AC0**	3	4 × 10	**6FX■002-5■S14-....**
1FT7065-7WF7...	92	16	6.0 (8.0)	18	**6SL3120-■TE21-8AD0**	1.5	4 × 2.5	**6FX■002-5■N36-....**
1FT7067-7WF7...	94	22	7.9 (10.6)	24	**6SL3120-1TE22-4AD0**	1.5	4 × 4	**6FX■002-5■N46-....**
1FT7085-7WF7...	93	36	13.5 (18.1)	45	**6SL3120-1TE24-5AC0**	1.5	4 × 6	**6FX■002-5■N54-....**
1FT7087-7WF7...	94	51	19.2 (25.7)	60	**6SL3120-1TE26-0AC0**	3	4 × 16	**6FX■002-5■S23-....**
1FT7065-7WH7...	92	22	9.0 (12.1)	24	**6SL3120-1TE22-4AD0**	1.5	4 × 4	**6FX■002-5■N46-....**
1FT7067-7WH7...	94	28	11.8 (15.8)	30	**6SL3120-1TE23-0AD0**	1.5	4 × 4	**6FX■002-5■N46-....**
1FT7085-7WH7...	94	58	20.3 (27.2)	60	**6SL3120-1TE26-0AC0**	3	4 × 16	**6FX■002-5■S23-....**
1FT7087-7WH7...	94	67	28.7 (38.5)	85	**6SL3120-1TE28-5AA3**	3	4 × 25	**6FX■002-5DG33-....**

Motor Module:	
Single Motor Module	**1**
Double Motor Module	**2**

Power cable:		
MOTION-CONNECT 800PLUS	**8**	
MOTION-CONNECT 500	**5**	
Without brake cores		**C**
With brake cores [5]		**D**
Length code		**....**

For information on the cables, refer to MOTION-CONNECT connection systems

[1] Connector size 3 is not rotatable. An alternative terminal box can be selected with connector size 3 only.

[2] Optimum efficiency in continuous duty.

[3] With default setting of the pulse frequency.

[4] The current carrying capacity of the power cable complies with EN 60204-1 for installation type C, for continuous duty at an ambient air temperature of 40 °C (104 °F).

[5] Cable cross-section for brake connection 2 × 1.5 mm².

[6]

$$P_{calc}\,[\text{kW}] = \frac{M_0\,[\text{Nm}] \times n_{rated}}{9550} \qquad P_{calc}\,[\text{hp}] = \frac{M_0\,[\text{lb}_f\text{-ft}] \times n_{rated}}{5250}$$

© Siemens 2022

Overview

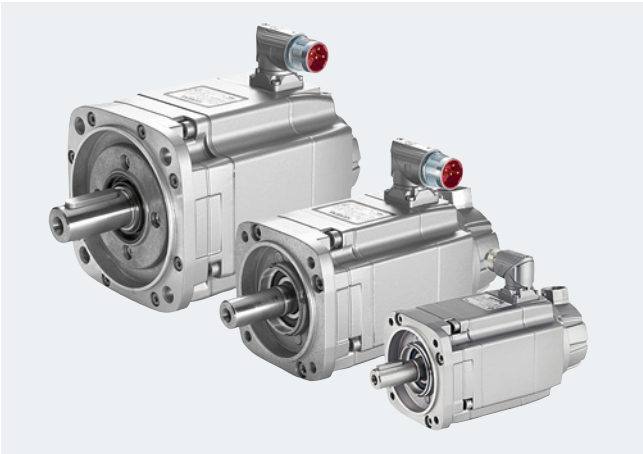

SIMOTICS S-1FK7 motors

SIMOTICS S-1FK7 motors are compact permanent-magnet synchronous motors. The available options, gearboxes and encoders, together with the expanded product range, mean that the SIMOTICS S-1FK7 motors can be perfectly adapted to any application. They therefore also satisfy the permanently increasing demands of state-of-the-art machine generations.

SIMOTICS S-1FK7 motors can be combined with the SINAMICS S120 drive system to create a powerful system with high functionality. The integrated encoder systems for speed and position control can be selected depending on the application.

The motors are designed for operation without external cooling and the heat is dissipated through the motor surface. The SIMOTICS S-1FK7 motors have a high overload capability.

Benefits

SIMOTICS S-1FK7 Compact motors:

- Space-saving installation due to extremely high power density
- For universal applications
- Wide range of motors

SIMOTICS S-1FK7 High Dynamic motors:

- Extremely high dynamic response thanks to the very low rotor moment of inertia

SIMOTICS S-1FK7 High Inertia motors:

- Robust closed-loop control properties for high or variable load moment of inertia
- Minimal optimization and commissioning overhead for the compensation of disturbances

Application

- Machine tools
- Robots and handling systems
- Wood, glass, ceramic, and stone working
- Packaging, plastic, and textile machines
- Printing machines
- Auxiliary axes

© Siemens 2022

Technical specifications

SIMOTICS S-1FK7 Compact/High Dynamic/High Inertia	
Motor type	Permanent-magnet synchronous motor
Magnet material	Rare-earth magnetic material
Cooling	Natural cooling, forced ventilation
Temperature monitoring	Temperature sensor in stator winding
Stator winding insulation in accordance with EN 60034-1 (IEC 60034-1)	Temperature class 155 (F) for a winding temperature rise of ΔT = 100 K at an ambient temperature of 40 °C (104 °F).
Type of construction in accordance with EN 60034-7 (IEC 60034-7)	IM B5 (IM V1, IM V3)
Degree of protection in accordance with EN 60034-5 (IEC 60034-5) [1]	IP64 (optional IP65)
Shaft extension at DE in accordance with DIN 748-3 (IEC 60072-1)	Plain shaft, optional shaft with feather key (half-key balancing)
Shaft and flange accuracy in accordance with DIN 42955 (IEC 60072-1) [2]	Tolerance N
Vibration severity in accordance with EN 60034-14 (IEC 60034-14)	Grade A is maintained up to rated speed
Sound pressure level L_{pA} (1 m) in accordance with EN ISO 1680, max. Tolerance + 3 dB	
• 1FK701 ... 1FK704	55 dB
• 1FK706	65 dB
• 1FK708/1FK710	70 dB
Connection	Connectors for signals and power
Paint finish [3]	Anthracite, similar to RAL 7016
2nd rating plate	Enclosed separately
Holding brake	Optional integrated holding brake (free of backlash, 24 V DC)
Certificate of suitability	cURus

Built-in encoder systems without DRIVE-CLiQ interface

Incremental encoder	
Encoder IC2048S/R	Incremental encoder sin/cos 1 V_{pp} 2048 S/R with C and D tracks
Absolute encoder	
Encoder AM2048S/R	Absolute encoder 2048 S/R, 4096 revolutions, multi-turn
Encoder AM512S/R	Absolute encoder 512 S/R, 4096 revolutions, multi-turn
Encoder AM16S/R	Absolute encoder 16 S/R, 4096 revolutions, multi-turn
Resolver	
Resolver Multi-pole	Multi-pole resolver (number of pole pairs corresponds to number of pole pairs of the motor)
Resolver 2-pole	2-pole resolver

Built-in encoder systems with DRIVE-CLiQ interface

Single-turn incremental encoder/absolute encoder [4]	
Encoder IC22DQ	Incremental encoder, 22 bit + commutation position, 11 bit
Encoder AS24DQI	Absolute encoder, single-turn, 24 bit
Encoder AS20DQI	Absolute encoder, single-turn, 20 bit
Multi-turn absolute encoder	
Encoder AM24DQI	Absolute encoder, 24 bit + 12 bit, multi-turn (traversing range 4096 revolutions)
Encoder AM20DQI/ AM20DQ	Absolute encoder, 20 bit + 12 bit, multi-turn (traversing range 4096 revolutions)
Encoder AM15DQ	Absolute encoder, 15 bit + 12 bit, multi-turn (traversing range 4096 revolutions)
Resolver	
Resolver R15DQ	Resolver 15 bit (internal, multi-pole)
Resolver R14DQ	Resolver 14 bit (internal, 2-pole)

S/R = signals/revolution

[1] 1FK701 can be supplied only with IP54 degree of protection.

[2] Concentricity of the shaft end, coaxiality of spigot and shaft, and axial runout of the mounting flanges to the axis of the shaft end.

[3] 1FK702 without a paint finish as standard.

[4] The previously installed incremental encoder is now replaced by a single-turn absolute encoder.

© Siemens 2022

Options

Order code	Description
J..	Mounting of SP+ planetary gearbox (see SIMOTICS S geared motors)
M03	Version for potentially explosive atmospheres Zone 2 in accordance with EN 50021/IEC 60079-15
M39	Version for potentially explosive atmospheres Zone 22 in accordance with EN 50281/IEC 61241-1
N05	Alternative shaft geometry
N16	Version for increased chemical resistance
N24	Reinforced brake [1]
Q31	Metal rating plate instead of adhesive label
V..	Mounting of NP planetary gearbox (see SIMOTICS S geared motors)
	Paint finish
K23	Special paint finish for "Worldwide" climate group: Primed and paint finish in anthracite, similar to RAL 7016 [1]
K23+X..	Special paint finish for "Worldwide" climate group: Primer and paint finish selectable from X01 to X27
K24	Primer (without paint finish) [2]
X01	Paint finish: Jet black, matt RAL 9005 [3]
X02	Paint finish: Cream white RAL 9001 [3]
X03	Paint finish: Reseda green RAL 6011 [3]
X04	Paint finish: Pebble grey RAL 7032 [3]
X05	Paint finish: Sky blue RAL 5015 [3]
X06	Paint finish: Light ivory RAL 1015 [3]
X08	Paint finish: Suitable for food grade applications White aluminum RAL 9006 [3]
X27	Paint finish in pearl dark gray, similar to RAL 9023 [3]

When ordering a motor with options, **-Z** must be added to the Article No.

N24
Reinforced brake

When option "Reinforced brake" is selected for SIMOTICS S-1FK7 motors, they are fitted with a holding brake that is stronger than the standard brake (cf. built-in holding brakes).

The option "Reinforced brake" is available for the following SIMOTICS S-1FK7 motors:

- 1FK703.-2....-.... ;
- 1FK704.-2....-.... ; 1FK704.-3....-.... ;
- 1FK706.-2....-.... ; 1FK706.-3....-.... ;
- 1FK708.-2....-.... ; 1FK708.-3....-.... ; 1FK7086-4....-.... ;
- 1FK7101-2....-.... ; 1FK7101-3....-.... ;
- 1FK7103-2....-.... ; 1FK7103-3....-.... ;
- 1FK7105-2....-.... ; 1FK7105-3....-.... ;

Note:
Check whether the mechanical components of the customer's machine are capable of withstanding increased forces and torques in the event of an Emergency Off scenario before using motors with a reinforced brake.

M03
Version for potentially explosive atmospheres Zone 2 in accordance with IEC EN 60079-15

Combustible or potentially explosive gases or vapors occur only rarely or briefly in Zone 2 areas. This type of protection is designated as EEx nA II (non sparking).

The special conditions for operating SIMOTICS S-1FK7 motors in Zone 2 areas, in particular the reduction in permissible operating speeds, are described in detail in Annex 610.40089.01 to the EC Declaration of Conformity 664.20038.02.

M39
Version for potentially explosive atmospheres Zone 22 in accordance with IEC 61241-1

Combustible or potentially explosive dust (non-conductive dust) occurs only rarely or briefly in Zone 22 areas. This type of protection is designated as Ex 3D T 160 °C (320 °F).

The special conditions for operating SIMOTICS S-1FK7 motors in Zone 22 areas are described in detail in Annex 610.40090.01 to the EC Declaration of Conformity 664.20039.02.

Note regarding M03 and M39 options:
It is not always permissible to combine the option for potentially explosive atmospheres with other motor options. Please refer to the configuration manual for further information.

A version with a DRIVE-CLiQ interface on the motor is only possible for DQI encoders with RJ45 connector. DQ encoders with SMI cannot be combined with option M03 or M39.

[1] For the option "Reinforced brake", a 1FK7 motor with brake version, B or H in the 15th data position, must be ordered.

[2] For the primer, 1FK702 motors must be ordered with 0 or 2 in the 16th data position.

[3] For the paint finish, 1FK702 motors must be ordered with 3 or 5 in the 16th data position.

© Siemens 2022

Options

N05
Alternative shaft geometry

SIMOTICS S-1FK7 motors are delivered with a shaft extension that has an alternative shaft geometry (smaller dimensions).

- 1FK703: 11 × 23 mm (0.43 × 0.91 in)
- 1FK704: 14 × 30 mm (0.55 × 1.18 in)
- 1FK706: 19 × 40 mm (0.75 × 1.57 in)
- 1FK708: 24 × 50 mm (0.94 × 1.97 in)
- 1FK710: 32 × 58 mm (1.26 × 2.28 in)

Note:
The SIMOTICS S-1FK7 motors with the option N05 are always shaft-compatible and flange-compatible with the corresponding SIMOTICS S-1FT5 motors.
Exception: The SIMOTICS S-1FK706... motors are only shaft-compatible with the SIMOTICS S-1FT506... motors.

N16
Version for increased chemical resistance

Plants and systems in the foodstuff industry or machine tools are typical applications for these types of versions.

The PS Premium paint system of these motors is resistant to a broad range of commonly used cleaning agents and disinfectants.

Additional properties of motors equipped with option N16:

- 4-coat paint system
- Nickel-plated connector

Note:
The PS Premium paint system has been tested with a broad spectrum of industrial cleaning products with pH values ranging from 1.5 to 13. Resistance to the acidic and alkaline cleaning products used, as well as disinfectants, was verified by a material resistance test performed by ECOLAB Deutschland GmbH.

Option N16 is available for SIMOTICS S-1FK703 to SIMOTICS S-1FK710 motors with the following encoders:

- AM20DQI (1FK7...-.....-.R..)
  Absolute encoder 20 bit + 12 bit
  Multi-turn with DRIVE-CLiQ interface
- AM24DQI (1FK7...-.....-.C..)
  Absolute encoder 24 bit + 12 bit
  Multi-turn with DRIVE-CLiQ interface
- AS24DQI (1FK7...-.....-.B..)
  Absolute encoder, single-turn, 24 bit
  with DRIVE-CLiQ interface
- AM2048S/R (1FK7...-.....-.E..)
  Absolute encoder 2048 S/R,
  4096 revolutions, multi-turn, with EnDat interface
- Multi-pole resolver (1FK7...-.....-.S..)
- Two-pole resolver (1FK7...-.....-.T..)

Motors with DRIVE-CLiQ interface differ from the standard motor version in the following respects:

- The motor is 5 mm longer and has the same overall length as a motor without DRIVE-CLiQ interface.
- The connector is implemented as a rotatable angle plug
- The height of the interfering contour relative to the motor center is 82 mm (3.23 in)
- A non-standard signal cable is required
  (see MOTION-CONNECT connection systems
  > Connection overview for SIMOTICS S-1FT7/S-1FK7 motors
  with RJ45 connection or with option N16 installed on
  SINAMICS S120)

© Siemens 2022

SIMOTICS S-1FK7 Compact – Natural cooling

Selection and ordering data

Rated speed	Shaft height	Rated power	Static torque	Rated torque	Rated current	SIMOTICS S-1FK7 Compact synchronous motors	No. of pole pairs	Moment of inertia rotor (without brake)	Weight (without brake)
n_{rated}	SH	P_{rated} at ΔT=100 K	M_0 at ΔT=100 K	M_{rated} at ΔT=100 K	I_{rated} at ΔT=100 K		p	J	m
rpm		kW (hp)	Nm (lb_f-ft)	Nm (lb_f-ft)	A	Article No.		10^{-4} kgm^2 (10^{-3} lb_f-in-s^2)	kg (lb)
SIMOTICS S-1FK7 Compact for DC link voltage 510 ... 720 V DC – Natural cooling									
2000	48	0.6 (0.8)	3.0 (2.2)	2.8 (2.1)	1.55	**1FK7042-2AC7■-1■■■**	4	2.9 (2.6)	4.6 (10.1)
	63	1.1 (1.5)	6.0 (4.4)	5.3 (3.9)	2.95	**1FK7060-2AC7■-1■■■**	4	7.7 (6.8)	7.1 (15.7)
		1.5 (2.0)	8.5 (6.3)	7.0 (5.2)	2.65	**1FK7062-2AC7■-1■■■**	4	11.2 (9.9)	9.1 (20.1)
		1.9 (2.5)	11.0 (8.1)	8.9 (6.6)	4.4	**1FK7063-2AC7■-1■■■**	4	14.7 (13.0)	11.1 (24.5)
	80	2.1 (2.8)	12.0 (8.9)	10.0 (7.4)	4.4	**1FK7081-2AC7■-1■■■**	4	20 (17.7)	12.9 (28.4)
		2.6 (3.5)	16.0 (11.8)	12.5 (9.2)	6.3	**1FK7083-2AC7■-1■■■**	4	26 (23.0)	15.6 (34.4)
		3.1 (4.2)	20.0 (14.8)	15.0 (11.1)	6.7	**1FK7084-2AC7■-1■■■**	4	32.5 (28.8)	18.3 (40.4)
	100	3 (4.02)	18.0 (13.3)	14.5 (10.7)	7.1	**1FK7100-2AC7■-1■■■**	4	54 (47.8)	17.6 (38.8)
		4.3 (5.8)	27.0 (19.9)	20.5 (15.1)	9.7	**1FK7101-2AC7■-1■■■**	4	79 (69.9)	23.0 (50.7)
		5.2 (7.0)	36.0 (26.6)	25.0 (18.4)	11.0	**1FK7103-2AC7■-1■■■**	4	104 (92.1)	28.5 (62.8)
		7.7 (10.3)	48.0 (35.4)	37.0 (27.3)	16.0	**1FK7105-2AC7■-1■■■**	4	154 (136)	39.0 (86.0)
3000	48	0.8 (1.1)	3.0 (2.2)	2.6 (1.9)	2.0	**1FK7042-2AF7■-1■■■**	4	2.9 (2.6)	4.6 (10.1)
	63	1.5 (2.0)	6.0 (4.4)	4.7 (3.5)	3.7	**1FK7060-2AF7■-1■■■**	4	7.7 (6.8)	7.1 (15.7)
		1.9 (2.5)	8.5 (6.3)	6.0 (4.4)	4.0	**1FK7062-2AF7■-1■■■**	4	11.2 (9.9)	9.1 (20.1)
		2.3 (3.1)	11.0 (8.1)	7.3 (5.4)	5.6	**1FK7063-2AF7■-1■■■**	4	14.7 (13.0)	11.1 (24.5)
	80	2.1 (2.8)	8.0 (5.9)	6.8 (5.0)	4.4	**1FK7080-2AF7■-1■■■**	4	14.2 (12.6)	10.3 (22.7)
		2.7 (3.6)	12.0 (8.9)	8.7 (6.4)	6.8	**1FK7081-2AF7■-1■■■**	4	20 (17.7)	12.9 (28.4)
		3.3 (4.4)	16.0 (11.8)	10.5 (7.7)	7.2	**1FK7083-2AF7■-1■■■**	4	26 (23.0)	15.6 (34.4)
		3.1 (4.2)	20.0 (14.8)	10.0 (7.4)	6.5	**1FK7084-2AF7■-1■■■**	4	32.5 (28.8)	18.3 (40.4)
	100	3.8 (5.1)	18.0 (13.3)	12.0 (8.9)	8.0	**1FK7100-2AF7■-1■■■**	4	54 (47.8)	17.6 (38.8)
		4.9 (6.6)	27.0 (19.9)	15.5 (11.4)	11.6	**1FK7101-2AF7■-1■■■**	4	79 (69.9)	23.0 (50.7)
		4.4 (5.9)	36.0 (26.6)	14.0 (10.3)	11.5	**1FK7103-2AF7■-1■■■**	4	104 (92.1)	28.5 (62.8)
		8.2 (11.0)	48.0 (35.4)	26.0 (19.2)	18.0	**1FK7105-2AF7■-1■■■**	4	154 (136)	39.0 (86.0)

Encoder systems for motors without DRIVE-CLiQ interface:	IC2048S/R encoder	**4**	**A**
	AM2048S/R encoder	**4**	**E**
	Multi-pole resolver	**4**	**S**
	2-pole resolver	**4**	**T**
Encoder systems for motors with DRIVE-CLiQ interface:	AS24DQI encoder	**1**	**B**
	AM24DQI encoder	**1**	**C**
	AS20DQI encoder	**1**	**Q**
	AM20DQI encoder	**1**	**R**
	R15DQ resolver	**1**	**U**
	R14DQ resolver	**1**	**P**

Shaft extension:	**Shaft and flange accuracy:**	**Holding brake:**	
Feather key	Tolerance N	Without	**A**
Feather key	Tolerance N	With	**B**
Plain shaft	Tolerance N	Without	**G**
Plain shaft	Tolerance N	With	**H**

Degree of protection:	IP64	**0**
	IP65	**1**
	IP65 and DE flange IP67	**2**

© Siemens 2022

Motor type (repeated)	Efficiency [1]	Stall current	Calculated power P_{calc} [6]	SINAMICS S120 Motor Module: Rated output current [2]	SINAMICS S120 Motor Module: **Booksize format** Internal air cooling. For further components, see SINAMICS S120 drive system	Power cable with complete shield, Motor connection (and brake connection) via power connector: Power connector	Cable cross-section [3]	Pre-assembled cable
	η	I_0 at M_0 ΔT=100 K	P_{calc} at M_0 ΔT=100 K	I_{rated}				
	%	A	kW (hp)	A	Article No.	Size	mm²	Article No.
				Line voltage 380 ... 480 V 3 AC				
1FK7042-2AC71-...	88	1.6	0.6 (0.8)	3	**6SL3120-■TE13-0AD0**	1	4 × 1.5	**6FX■002-5■N06-....**
1FK7060-2AC71-...	90	3.15	1.3 (1.7)	3 [4]	**6SL3120-■TE13-0AD0**	1	4 × 1.5	**6FX■002-5■N06-....**
1FK7062-2AC71-...	90	3.0	1.8 (2.4)	3	**6SL3120-■TE13-0AD0**	1	4 × 1.5	**6FX■002-5■N06-....**
1FK7063-2AC71-...	91	5.3	2.3 (3.1)	5 [4]	**6SL3120-■TE15-0AD0**	1	4 × 1.5	**6FX■002-5■N06-....**
1FK7081-2AC71-...	93	5.0	2.5 (3.4)	5	**6SL3120-■TE15-0AD0**	1	4 × 1.5	**6FX■002-5■N06-....**
1FK7083-2AC71-...	93	7.5	3.4 (4.6)	9	**6SL3120-■TE21-0AD0**	1	4 × 1.5	**6FX■002-5■N06-....**
1FK7084-2AC71-...	93	8.5	4.2 (5.6)	9	**6SL3120-■TE21-0AD0**	1	4 × 1.5	**6FX■002-5■N06-....**
1FK7100-2AC71-...	92	8.4	3.8 (5.1)	9	**6SL3120-■TE21-0AD0**	1	4 × 1.5	**6FX■002-5■N06-....**
1FK7101-2AC71-...	93	12.3	5.7 (7.6)	18	**6SL3120-■TE21-8AD0**	1.5	4 × 1.5	**6FX■002-5■N26-....**
1FK7103-2AC71-...	93	14.4	7.5 (10.1)	18	**6SL3120-■TE21-8AD0**	1.5	4 × 1.5	**6FX■002-5■N26-....**
1FK7105-2AC71-...	93	20.0	10.1 (13.5)	24	**6SL3120-1TE22-4AD0**	1.5	4 × 2.5	**6FX■002-5■N36-....**
1FK7042-2AF71-...	89	2.2	0.9 (1.2)	3	**6SL3120-■TE13-0AD0**	1	4 × 1.5	**6FX■002-5■N06-....**
1FK7060-2AF71-...	90	4.45	1.9 (2.5)	5	**6SL3120-■TE15-0AD0**	1	4 × 1.5	**6FX■002-5■N06-....**
1FK7062-2AF71-...	91	5.3	2.7 (3.6)	5 [4]	**6SL3120-■TE15-0AD0**	1	4 × 1.5	**6FX■002-5■N06-....**
1FK7063-2AF71-...	91	8.0	3.5 (4.7)	9	**6SL3120-■TE21-0AD0**	1	4 × 1.5	**6FX■002-5■N06-....**
1FK7080-2AF71-...	92	4.9	2.5 (3.4)	5	**6SL3120-■TE15-0AD0**	1	4 × 1.5	**6FX■002-5■N06-....**
1FK7081-2AF71-...	93	8.7	3.8 (5.1)	9	**6SL3120-■TE21-0AD0**	1	4 × 1.5	**6FX■002-5■N06-....**
1FK7083-2AF71-...	93	10.1	5 (6.71)	18	**6SL3120-■TE21-8AD0**	1	4 × 1.5	**6FX■002-5■N06-....**
1FK7084-2AF71-...	93	12.1	6.3 (8.4)	18	**6SL3120-■TE21-8AD0**	1	4 × 1.5	**6FX■002-5■N06-....**
1FK7100-2AF71-...	92	11.1	5.7 (7.6)	18	**6SL3120-■TE21-8AD0**	1	4 × 1.5	**6FX■002-5■N06-....**
1FK7101-2AF71-...	93	18.8	8.5 (11.4)	18 [4]	**6SL3120-■TE21-8AD0**	1.5	4 × 2.5	**6FX■002-5■N36-....**
1FK7103-2AF71-...	93	26.0	11.3 (15.2)	30	**6SL3120-1TE23-0AD0**	1.5	4 × 4	**6FX■002-5■N46-....**
1FK7105-2AF71-...	94	31.0	15.1 (20.2)	30 [4]	**6SL3120-1TE23-0AD0**	1.5	4 × 6	**6FX■002-5■N56-....**

Motor Module:	
Single Motor Module	**1**
Double Motor Module	**2**

Power cable:		
MOTION-CONNECT 800PLUS	**8**	
MOTION-CONNECT 500	**5**	
Without brake cores		**C**
With brake cores [5]		**D**
Length code		**....**

For information on the cables, refer to MOTION-CONNECT connection systems

[1] Optimum efficiency in continuous duty.

[2] With default setting of the pulse frequency.

[3] The current carrying capacity of the power cables complies with EN 60204-1 for installation type C, for continuous duty at an ambient air temperature of 40 °C (104 °F).

[4] With the specified Motor Module, the motor cannot be fully utilized at M_0 with a winding temperature rise of ΔT = 100 K. If a Motor Module with a higher rating is used, you must check whether the specified power cable can be connected to the larger Motor Module.

[5] Cable cross-section for brake connection 2 × 1.5 mm².

[6]
$$P_{calc}\,[\text{kW}] = \frac{M_0\,[\text{Nm}] \times n_{rated}}{9550} \qquad P_{calc}\,[\text{hp}] = \frac{M_0\,[\text{lb}_f\text{-ft}] \times n_{rated}}{5250}$$

© Siemens 2022

Selection and ordering data

Rated speed	Shaft height	Rated power	Static torque	Rated torque	Rated current	**SIMOTICS S-1FK7 Compact synchronous motors**	No. of pole pairs	Moment of inertia rotor (without brake)	Weight (without brake)
n_{rated}	SH	P_{rated} at ΔT=100 K	M_0 at ΔT=100 K	M_{rated} at ΔT=100 K	I_{rated} at ΔT=100 K		p	J	m
rpm		kW (hp)	Nm (lb_f-ft)	Nm (lb_f-ft)	A	Article No.		10^{-4} kgm^2 (10^{-3} lb_f-in-s^2)	kg (lb)
SIMOTICS S-1FK7 Compact for DC link voltage 510 ... 720 V DC – Natural cooling									
4500	63	1.7 (2.3)	6.0 (4.4)	3.7 (2.7)	4.3	**1FK7060-2AH7■-1■■■**	4	7.7 (6.8)	7.1 (15.7)
		1.4 (1.9)	8.5 (6.3)	3.0 (2.2)	3.3	**1FK7062-2AH7■-1■■■**	4	11.2 (9.9)	9.1 (20.1)
		1.4 (1.9)	11.0 (8.1)	3.0 (2.2)	3.8	**1FK7063-2AH7■-1■■■**	4	14.7 (13.0)	11.1 (24.5)
	80	2.1 (2.8)	8.0 (5.9)	4.5 (3.3)	4.8	**1FK7080-2AH7■-1■■■**	4	14.2 (12.6)	10.3 (22.7)
		1.8 (2.4)	12.0 (8.9)	3.8 (2.8)	4.9	**1FK7081-2AH7■-1■■■**	4	20 (17.7)	12.9 (28.4)
		1.4 (1.9)	16.0 (11.8)	3.0 (2.2)	3.6	**1FK7083-2AH7■-1■■■**	4	26 (23.0)	15.6 (34.4)
6000	36	0.5 (0.7)	1.15 (0.85)	0.8 (0.6)	1.3	**1FK7032-2AK7■-1■■■**	3	0.65 (0.58)	2.7 (6.0)
		0.6 (0.8)	1.6 (1.2)	1.0 (0.7)	1.3	**1FK7034-2AK7■-1■■■**	3	0.9 (0.8)	3.5 (7.7)
	48	0.7 (0.9)	1.6 (1.2)	1.1 (0.8)	1.85	**1FK7040-2AK7■-1■■■**	4	1.6 (1.4)	3.2 (7.1)
		0.9 (1.2)	3.0 (2.2)	1.5 (1.1)	2.5	**1FK7042-2AK7■-1■■■**	4	2.9 (2.6)	4.6 (10.1)

Encoder systems for motors without DRIVE-CLiQ interface:	IC2048S/R encoder		**4**	**A**
	AM2048S/R encoder		**4**	**E**
	Multi-pole resolver		**4**	**S**
	2-pole resolver		**4**	**T**
Encoder systems for motors with DRIVE-CLiQ interface:	AS24DQI encoder		**1**	**B**
	AM24DQI encoder		**1**	**C**
	AS20DQI encoder		**1**	**Q**
	AM20DQI encoder		**1**	**R**
	R15DQ resolver		**1**	**U**
	R14DQ resolver		**1**	**P**
Shaft extension:	**Shaft and flange accuracy:**	**Holding brake:**		
Feather key	Tolerance N	Without		**A**
Feather key	Tolerance N	With		**B**
Plain shaft	Tolerance N	Without		**G**
Plain shaft	Tolerance N	With		**H**
Degree of protection:	IP64			**0**
	IP65			**1**
	IP65 and DE flange IP67			**2**

© Siemens 2022

Motor type (repeated)	Efficiency [1]	Stall current	Calculated power P_{calc} [5]	SINAMICS S120 Motor Module: Rated output current [2]	SINAMICS S120 Motor Module: Booksize format, Internal air cooling, For further components, see SINAMICS S120 drive system	Power cable with complete shield, Motor connection (and brake connection) via power connector: Power connector	Cable cross-section [3]	Pre-assembled cable
	η	I_0 at M_0 ΔT=100 K	P_{calc} at M_0 ΔT=100 K	I_{rated}				
	%	A	kW (hp)	A	Article No.	Size	mm²	Article No.
				Line voltage 380 ... 480 V 3 AC				
1FK7060-2AH71-...	90	6.3	2.8 (3.8)	9	**6SL3120-■TE21-0AD0**	1	4 × 1.5	**6FX■002-5■N06-....**
1FK7062-2AH71-...	91	8.0	4 (5.36)	9	**6SL3120-■TE21-0AD0**	1	4 × 1.5	**6FX■002-5■N06-....**
1FK7063-2AH71-...	90	12.0	5.2 (7.0)	18	**6SL3120-■TE21-8AD0**	1	4 × 1.5	**6FX■002-5■N06-....**
1FK7080-2AH71-...	92	7.4	3.8 (5.1)	9	**6SL3120-■TE21-0AD0**	1	4 × 1.5	**6FX■002-5■N06-....**
1FK7081-2AH71-...	93	13.1	5.7 (7.6)	18	**6SL3120-■TE21-8AD0**	1	4 × 1.5	**6FX■002-5■N06-....**
1FK7083-2AH71-...	93	15.0	7.5 (10.1)	18	**6SL3120-■TE21-8AD0**	1	4 × 1.5	**6FX■002-5■N06-....**
1FK7032-2AK71-...	88	1.7	0.7 (0.9)	3	**6SL3120-■TE13-0AD0**	1	4 × 1.5	**6FX■002-5■N06-....**
1FK7034-2AK71-...	88	1.9	1 (1.34)	3	**6SL3120-■TE13-0AD0**	1	4 × 1.5	**6FX■002-5■N06-....**
1FK7040-2AK71-...	88	2.35	1 (1.34)	3	**6SL3120-■TE13-0AD0**	1	4 × 1.5	**6FX■002-5■N06-....**
1FK7042-2AK71-...	89	4.4	1.9 (2.5)	5	**6SL3120-■TE15-0AD0**	1	4 × 1.5	**6FX■002-5■N06-....**

Motor Module:	
Single Motor Module	**1**
Double Motor Module	**2**

Power cable:		
MOTION-CONNECT 800PLUS	**8**	
MOTION-CONNECT 500	**5**	
Without brake cores		**C**
With brake cores [4]		**D**
Length code		**....**

For information on the cables, refer to MOTION-CONNECT connection systems

[1] Optimum efficiency in continuous duty.

[2] With default setting of the pulse frequency.

[3] The current carrying capacity of the power cables complies with EN 60204-1 for installation type C, for continuous duty at an ambient air temperature of 40 °C (104 °F).

[4] Cable cross-section for brake connection 2 × 1.5 mm².

[5]
$$P_{calc}\,[\text{kW}] = \frac{M_0\,[\text{Nm}] \times n_{rated}}{9550} \qquad P_{calc}\,[\text{hp}] = \frac{M_0\,[\text{lb}_f\text{-ft}] \times n_{rated}}{5250}$$

© Siemens 2022

Selection and ordering data

Rated speed	Shaft height	Rated power	Static torque	Rated torque	Rated current	**SIMOTICS S-1FK7 Compact synchronous motors**	No. of pole pairs	Moment of inertia rotor (without brake)	Weight (without brake)
n_{rated}	SH	P_{rated} at ΔT=100 K	M_0 at ΔT=100 K	M_{rated} at ΔT=100 K	I_{rated} at ΔT=100 K		p	J	m
rpm		kW (hp)	Nm (lb_f-ft)	Nm (lb_f-ft)	A	Article No.		10^{-4} kgm^2 (10^{-3} lb_f-in-s^2)	kg (lb)
1FK7 Compact for DC link voltage 510 ... 720 V DC – Natural cooling									
6000	20	0.05 (0.07)	0.18 (0.13)	0.08 (0.06)	0.85	**1FK7011-5AK7■-1■■■**	4	0.064 (0.057)	0.9 (2.0)
		0.1 (0.1)	0.35 (0.26)	0.16 (0.12)	0.85	**1FK7015-5AK7■-1■■■**	4	0.083 (0.073)	1.1 (2.4)
	28	0.38 (0.51)	0.85 (0.63)	0.6 (0.4)	1.4	**1FK7022-5AK7■-1■■■**	3	0.28 (0.25)	1.8 (4.0)

Encoder systems for motors without DRIVE-CLiQ interface:	IC2048S/R encoder	**4**	**A**
	AM512S/R encoder (only for 1FK702)	**4**	**H**
	AM16S/R encoder	**4**	**J**
	Multi-pole resolver	**4**	**S**
	2-pole resolver	**4**	**T**
Encoder systems for motors with DRIVE-CLiQ interface: (Only for 1FK702) [1]	IC22DQ encoder	**1**	**D**
	AM20DQ encoder	**1**	**L**
	AM15DQ encoder	**1**	**V**
	R15DQ resolver	**1**	**U**
	R14DQ resolver	**1**	**P**

Shaft extension:	**Shaft and flange accuracy:**	**Holding brake:**	
Feather key	Tolerance N	Without	**A**
Feather key	Tolerance N	With	**B**
Plain shaft	Tolerance N	Without	**G**
Plain shaft	Tolerance N	With	**H**

Degree of protection:	**Paint finish:**	
IP64 (only for 1FK702)	Without	**0**
IP65 and DE flange IP67 (only for 1FK702)	Without	**2**
IP54 (only for 1FK701). IP64 (only for 1FK702)	With	**3**
IP65 and DE flange IP67 (only for 1FK702)	With	**5**

[1] 1FK701 motors cannot be equipped with a DRIVE-CLiQ interface.
The encoder systems are connected via SMC

© Siemens 2022

Motor type (repeated)	Efficiency [1]	Stall current	Calculated power P_{calc} [5]	SINAMICS S120 Motor Module: Rated output current [2]	SINAMICS S120 Motor Module: **Booksize format** Internal air cooling. For further components, see SINAMICS S120 drive system	Power cable with complete shield, Motor connection (and brake connection) via power connector: Power connector	Cable cross-section [3]	Pre-assembled cable
	η	I_0 at M_0 ΔT=100 K	P_{calc} at M_0 ΔT=100 K	I_{rated}				
	%	A	kW (hp)	A	Article No.	Size	mm²	Article No.
				Line voltage 380 ... 480 V 3 AC				
1FK7011-5AK71-...	62	1.5	0.1 (0.1)	3	**6SL3120-■TE13-0AD0**	0.5	4 × 1.5	**6FX■002-5DN27-....**
1FK7015-5AK71-...	68	1.5	0.2 (0.3)	3	**6SL3120-■TE13-0AD0**	0.5	4 × 1.5	**6FX■002-5DN27-....**
1FK7022-5AK71-...	86	1.8	0.5 (0.7)	3	**6SL3120-■TE13-0AD0**	1	4 × 1.5	**6FX■002-5■N06-....**

Motor Module:	
Single Motor Module	**1**
Double Motor Module	**2**

Power cable:		
MOTION-CONNECT 800PLUS	**8**	
MOTION-CONNECT 500	**5**	
Without brake cores		**C**
With brake cores [4]		**D**
Length code		**....**

For information on the cables, refer to MOTION-CONNECT connection systems

[1] Optimum efficiency in continuous duty.

[2] With default setting of the pulse frequency.

[3] The current carrying capacity of the power cables complies with EN 60204-1 for installation type C, for continuous duty at an ambient air temperature of 40 °C (104 °F).

[4] Cable cross-section for brake connection 2 × 1.5 mm².

[5]
$$P_{calc}\,[\text{kW}] = \frac{M_0\,[\text{Nm}] \times n_{rated}}{9550} \qquad P_{calc}\,[\text{hp}] = \frac{M_0\,[\text{lb}_f\text{-ft}] \times n_{rated}}{5250}$$

© Siemens 2022

Selection and ordering data

Rated speed	Shaft height	Rated power	Static torque	Rated torque	Rated current	**SIMOTICS S-1FK7 High Dynamic synchronous motors**	No. of pole pairs	Moment of inertia rotor (without brake)	Weight (without brake)
n_{rated}	SH	P_{rated} at ΔT=100 K	M_0 at ΔT=100 K	M_{rated} at ΔT=100 K	I_{rated} at ΔT=100 K		p	J	m
rpm		kW (hp)	Nm (lb_f-ft)	Nm (lb_f-ft)	A	Article No.		10^{-4} kgm^2 (10^{-3} lb_f-in-s^2)	kg (lb)
SIMOTICS S-1FK7 High Dynamic for DC link voltage 510 ... 720 V DC – Natural cooling									
2000	63	2.1 (2.8)	12.0 (8.9)	10.0 (7.4)	7.1	**1FK7064-4CC7■-1■■■**	3	7.5 (6.6)	15.4 (34.0)
	80	3.1 (4.2)	22.0 (16.2)	15.0 (11.1)	10.0	**1FK7085-4CC7■-1■■■**	4	22 (19.5)	23.0 (50.7)
		3.8 (5.1)	28.0 (20.7)	18.0 (13.3)	9.0	**1FK7086-4CC7■-1■■■**	4	22 (19.5)	23.0 (50.7)
3000	48	1.2 (1.6)	4.5 (3.3)	3.7 (2.7)	3.45	**1FK7044-4CF7■-1■■■**	3	1.26 (1.12)	7.4 (16.3)
	63	1.7 (2.3)	6.4 (4.7)	5.4 (4.0)	5.3	**1FK7061-4CF7■-1■■■**	3	4.1 (3.6)	9.5 (20.9)
		2.5 (3.4)	12.0 (8.9)	8.0 (5.9)	7.6	**1FK7064-4CF7■-1■■■**	3	7.5 (6.6)	15.4 (34.0)
	80	2 (2.68)	22.0 (16.2)	6.5 (4.8)	7.0	**1FK7085-4CF7■-1■■■**	4	22 (19.5)	23.0 (50.7)
		2 (2.68)	28.0 (20.7)	6.5 (4.8)	5.7	**1FK7086-4CF7■-1■■■**	4	22 (19.5)	23.0 (50.7)
4500	48	1.2 (1.6)	3.5 (2.6)	2.6 (1.9)	3.3	**1FK7043-4CH7■-1■■■**	3	1 (0.89)	6.0 (13.2)
		1.4 (1.9)	4.5 (3.3)	3.0 (2.2)	3.9	**1FK7044-4CH7■-1■■■**	3	1.26 (1.12)	7.4 (16.3)
	63	2 (2.68)	6.4 (4.7)	4.3 (3.2)	6.2	**1FK7061-4CH7■-1■■■**	3	4.1 (3.6)	9.5 (20.9)
		2.4 (3.2)	12.0 (8.9)	5.0 (3.7)	7.0	**1FK7064-4CH7■-1■■■**	3	7.5 (6.6)	15.4 (34.0)
6000	36	0.6 (0.8)	1.3 (1.0)	0.9 (0.7)	1.6	**1FK7033-4CK7■-1■■■**	3	0.25 (0.22)	3.0 (6.6)
	48	1.3 (1.7)	3.5 (2.6)	2.0 (1.5)	3.5	**1FK7043-4CK7■-1■■■**	3	1 (0.89)	6.0 (13.2)

Encoder systems for motors without DRIVE-CLiQ interface:	IC2048S/R encoder	**4**	**A**
	AM2048S/R encoder	**4**	**E**
	Multi-pole resolver	**4**	**S**
	2-pole resolver	**4**	**T**
Encoder systems for motors with DRIVE-CLiQ interface:	AS24DQI encoder	**1**	**B**
	AM24DQI encoder	**1**	**C**
	AS20DQI encoder	**1**	**Q**
	AM20DQI encoder	**1**	**R**
	R15DQ resolver	**1**	**U**
	R14DQ resolver	**1**	**P**

Shaft extension:	**Shaft and flange accuracy:**	**Holding brake:**	
Feather key	Tolerance N	Without	**A**
Feather key	Tolerance N	With	**B**
Plain shaft	Tolerance N	Without	**G**
Plain shaft	Tolerance N	With	**H**

Degree of protection:	IP64	**0**
	IP65	**1**
	IP65 and DE flange IP67	**2**

© Siemens 2022

Motor type (repeated)	Efficiency [1]	Stall current	Calculated power P_{calc} [5]	SINAMICS S120 Motor Module: Rated output current [2]	SINAMICS S120 Motor Module: Booksize format, Internal air cooling, For further components, see SINAMICS S120 drive system	Power cable with complete shield, Motor connection (and brake connection) via power connector: Power connector	Cable cross-section [3]	Pre-assembled cable
	η	I_0 at M_0 ΔT=100 K	P_{calc} at M_0 ΔT=100 K	I_{rated}				
	%	A	kW (hp)	A	Article No.	Size	mm²	Article No.
				Line voltage 380 ... 480 V 3 AC				
1FK7064-4CC71-...	93	8.1	2.5 (3.4)	9	**6SL3120-■TE21-0AD0**	1	4 × 1.5	**6FX■002-5■N06-....**
1FK7085-4CC71-...	92	13.5	4.6 (6.2)	18	**6SL3120-■TE21-8AD0**	1	4 × 1.5	**6FX■002-5■N06-....**
1FK7086-4CC71-...	93	13.2	5.9 (7.9)	18	**6SL3120-■TE21-8AD0**	1	4 × 1.5	**6FX■002-5■N06-....**
1FK7044-4CF71-...	91	4.0	1.4 (1.9)	5	**6SL3120-■TE15-0AD0**	1	4 × 1.5	**6FX■002-5■N06-....**
1FK7061-4CF71-...	93	6.1	2 (2.68)	9	**6SL3120-■TE21-0AD0**	1	4 × 1.5	**6FX■002-5■N06-....**
1FK7064-4CF71-...	93	10.8	3.8 (5.1)	18	**6SL3120-■TE21-8AD0**	1	4 × 1.5	**6FX■002-5■N06-....**
1FK7085-4CF71-...	92	22.0	6.9 (9.3)	24	**6SL3120-1TE22-4AD0**	1.5	4 × 4	**6FX■002-5■N46-....**
1FK7086-4CF71-...	93	21.5	8.8 (11.8)	24	**6SL3120-1TE22-4AD0**	1.5	4 × 4	**6FX■002-5■N46-....**
1FK7043-4CH71-...	90	4.1	1.6 (2.1)	5	**6SL3120-■TE15-0AD0**	1	4 × 1.5	**6FX■002-5■N06-....**
1FK7044-4CH71-...	91	5.4	2.1 (2.8)	9	**6SL3120-■TE21-0AD0**	1	4 × 1.5	**6FX■002-5■N06-....**
1FK7061-4CH71-...	93	8.7	3 (4.02)	9	**6SL3120-■TE21-0AD0**	1	4 × 1.5	**6FX■002-5■N06-....**
1FK7064-4CH71-...	93	15.0	5.7 (7.6)	18	**6SL3120-■TE21-8AD0**	1	4 × 1.5	**6FX■002-5■N06-....**
1FK7033-4CK71-...	88	2.1	0.8 (1.1)	3	**6SL3120-■TE13-0AD0**	1	4 × 1.5	**6FX■002-5■N06-....**
1FK7043-4CK71-...	90	5.6	2.2 (3.0)	9	**6SL3120-■TE21-0AD0**	1	4 × 1.5	**6FX■002-5■N06-....**

Motor Module:	
Single Motor Module	**1**
Double Motor Module	**2**

Power cable:		
MOTION-CONNECT 800PLUS	**8**	
MOTION-CONNECT 500	**5**	
Without brake cores		**C**
With brake cores [4]		**D**
Length code		**....**

For information on the cables, refer to MOTION-CONNECT connection systems

6

[1] Optimum efficiency in continuous duty.

[2] With default setting of the pulse frequency.

[3] The current carrying capacity of the power cables complies with EN 60204-1 for installation type C, for continuous duty at an ambient air temperature of 40 °C (104 °F).

[4] Cable cross-section for brake connection 2 × 1.5 mm².

[5]
$$P_{calc}\,[\text{kW}] = \frac{M_0\,[\text{Nm}] \times n_{rated}}{9550} \qquad P_{calc}\,[\text{hp}] = \frac{M_0\,[\text{lb}_f\text{-ft}] \times n_{rated}}{5250}$$

© Siemens 2022

Selection and ordering data

Rated speed	Shaft height	Rated power	Static torque	Rated torque	Rated current	**SIMOTICS S-1FK7 High Dynamic synchronous motors**	No. of pole pairs	Moment of inertia rotor (without brake)	Weight (without brake)
n_{rated}	SH	P_{rated} at ΔT=100 K	M_0 at ΔT=100 K	M_{rated} at ΔT=100 K	I_{rated} at ΔT=100 K		p	J	m
rpm		kW (hp)	Nm (lb_f-ft)	Nm (lb_f-ft)	A	Article No.		10^{-4} kgm^2 (10^{-3} lb_f-in-s^2)	kg (lb)
SIMOTICS S-1FK7 High Dynamic for DC link voltage 510 ... 720 V DC – Forced ventilation									
3000	80	7.5 (10.1)	38.0 (28.0)	24.0 (17.7)	20.0	**1FK7086-4SF7■-1■■■**	4	22 (19.5)	27.0 (59.5)

Encoder systems for motors without DRIVE-CLiQ interface:	IC2048S/R encoder		**4**	**A**
	AM2048S/R encoder		**4**	**E**
	Multi-pole resolver		**4**	**S**
	2-pole resolver		**4**	**T**
Encoder systems for motors with DRIVE-CLiQ interface:	AS24DQI encoder		**1**	**B**
	AM24DQI encoder		**1**	**C**
	AS20DQI encoder		**1**	**Q**
	AM20DQI encoder		**1**	**R**
	R15DQ resolver		**1**	**U**
	R14DQ resolver		**1**	**P**
Connector outlet direction:	Connector size 1.5	Rotatable connector	**1**	
Shaft extension:	**Shaft and flange accuracy:**	**Holding brake:**		
Feather key	Tolerance N	Without		**A**
Feather key	Tolerance N	With		**B**
Plain shaft	Tolerance N	Without		**G**
Plain shaft	Tolerance N	With		**H**
Degree of protection: [1]	IP64			**0**
	IP65			**1**
	IP65 and DE flange IP67			**2**

[1] The degree of protection refers to the motor. The built-on fan achieves degree of protection IP54.

© Siemens 2022

Motor type (repeated)	Efficiency [1]	Stall current	Calculated power P_{calc} [5]	SINAMICS S120 Motor Module: Rated output current [2]	SINAMICS S120 Motor Module: Booksize format, Internal air cooling. For further components, see SINAMICS S120 drive system	Power cable with complete shield, Motor connection (and brake connection) via power connector: Power connector	Cable cross-section [3]	Pre-assembled cable
	η	I_0 at M_0 ΔT=100 K	P_{calc} at M_0 ΔT=100 K	I_{rated}				
	%	A	kW (hp)	A	Article No.	Size	mm²	Article No.
				Line voltage 380 ... 480 V 3 AC				
1FK7086-4SF71-...	93	29.0	11.9 (16.0)	30	**6SL3120-1TE23-0AD0**	1.5	4 × 6	**6FX■002-5■N56-....**

Motor Module Single Motor Module	**1**

Power cable: MOTION-CONNECT 800PLUS	**8**	
MOTION-CONNECT 500	**5**	
Without brake cores		**C**
With brake cores [4]		**D**
Length code		**....**

For information on the cables, refer to MOTION-CONNECT connection systems

[1] Optimum efficiency in continuous duty.

[2] With default setting of the pulse frequency.

[3] The current carrying capacity of the power cables complies with EN 60204-1 for installation type C, for continuous duty at an ambient air temperature of 40 °C (104 °F).

[4] Cable cross-section for brake connection 2 × 1.5 mm².

[5]
$$P_{calc}\,[\text{kW}] = \frac{M_0\,[\text{Nm}] \times n_{rated}}{9550} \qquad P_{calc}\,[\text{hp}] = \frac{M_0\,[\text{lb}_f\text{-ft}] \times n_{rated}}{5250}$$

© Siemens 2022

Selection and ordering data

Rated speed	Shaft height	Rated power	Static torque	Rated torque	Rated current	**SIMOTICS S-1FK7 High Inertia synchronous motors**	No. of pole pairs	Moment of inertia rotor (without brake)	Weight (without brake)
n_{rated}	SH	P_{rated} at ΔT=100 K	M_0 at ΔT=100 K	M_{rated} at ΔT=100 K	I_{rated} at ΔT=100 K		p	J	m
rpm		kW (hp)	Nm (lb_f-ft)	Nm (lb_f-ft)	A	Article No.		10^{-4} kgm^2 (10^{-3} lb_f-in-s^2)	kg (lb)
SIMOTICS S-1FK7 High Inertia for DC link voltage 510 ... 720 V DC – Natural cooling									
2000	80	3.1 (4.2)	20.0 (14.8)	15.0 (11.1)	6.7	**1FK7084-3BC7■-1■■■**	4	99 (87.6)	23.0 (50.7)
	100	3 (4.02)	18.0 (13.3)	14.5 (10.7)	7.1	**1FK7100-3BC7■-1■■■**	4	87 (77.0)	19.4 (42.8)
		4.3 (5.8)	27.0 (19.9)	20.5 (15.1)	9.7	**1FK7101-3BC7■-1■■■**	4	127 (112)	25.7 (56.7)
		5.2 (7.0)	36.0 (26.6)	25.0 (18.4)	11.0	**1FK7103-3BC7■-1■■■**	4	168 (149)	32.1 (70.8)
		7.7 (10.3)	48.0 (35.4)	37.0 (27.3)	16.0	**1FK7105-3BC7■-1■■■**	4	249 (220)	44.4 (97.9)
3000	63	1.5 (2.0)	6.0 (4.4)	4.7 (3.5)	3.7	**1FK7060-3BF7■-1■■■**	4	12.5 (11.1)	7.9 (17.4)
		1.9 (2.5)	8.5 (6.3)	6.0 (4.4)	4.0	**1FK7062-3BF7■-1■■■**	4	23.5 (20.8)	10.7 (23.6)
	80	2.7 (3.6)	12.0 (8.9)	8.7 (6.4)	6.8	**1FK7081-3BF7■-1■■■**	4	49 (43.4)	15.2 (33.5)
		3.1 (4.2)	20.0 (14.8)	10.0 (7.4)	6.5	**1FK7084-3BF7■-1■■■**	4	99 (87.6)	23.0 (50.7)
	100	4.9 (6.6)	27.0 (19.9)	15.5 (11.4)	11.6	**1FK7101-3BF7■-1■■■**	4	127 (112)	25.7 (56.7)
		4.4 (5.9)	36.0 (26.6)	14.0 (10.3)	11.5	**1FK7103-3BF7■-1■■■**	4	168 (149)	32.1 (70.8)
6000	48	0.9 (1.2)	3.0 (2.2)	1.5 (1.1)	2.5	**1FK7042-3BK7■-1■■■**	4	5.1 (4.5)	5.1 (11.2)

Encoder systems for motors without DRIVE-CLiQ interface:	IC2048S/R encoder	**4**	**A**
	AM2048S/R encoder	**4**	**E**
Encoder systems for motors with DRIVE-CLiQ interface:	AS24DQI encoder	**1**	**B**
	AM24DQI encoder	**1**	**C**
	AS20DQI encoder	**1**	**Q**
	AM20DQI encoder	**1**	**R**

Shaft extension:	**Shaft and flange accuracy:**	**Holding brake:**	
Feather key	Tolerance N	Without	**A**
Feather key	Tolerance N	With	**B**
Plain shaft	Tolerance N	Without	**G**
Plain shaft	Tolerance N	With	**H**

Degree of protection:	IP64	**0**
	IP65	**1**
	IP65 and DE flange IP67	**2**

© Siemens 2022

Motor type (repeated)	Efficiency [1]	Stall current	Calculated power P_{calc} [5]	SINAMICS S120 Motor Module: Rated output current [2]	SINAMICS S120 Motor Module: Booksize format, Internal air cooling, For further components, see SINAMICS S120 drive system	Power cable with complete shield, Motor connection (and brake connection) via power connector: Power connector	Cable cross-section [3]	Pre-assembled cable
	η	I_0 at M_0 ΔT=100 K	P_{calc} at M_0 ΔT=100 K	I_{rated}				
	%	A	kW (hp)	A	Article No.	Size	mm²	Article No.
				Line voltage 380 ... 480 V 3 AC				
1FK7084-3BC71-...	93	8.5	4.2 (5.6)	9	**6SL3120-■TE21-0AD0**	1	4 × 1.5	**6FX■002-5■N06-....**
1FK7100-3BC71-...	92	8.4	3.8 (5.1)	9	**6SL3120-■TE21-0AD0**	1	4 × 1.5	**6FX■002-5■N06-....**
1FK7101-3BC71-...	93	12.3	5.7 (7.6)	18	**6SL3120-■TE21-8AD0**	1.5	4 × 1.5	**6FX■002-5■N26-....**
1FK7103-3BC71-...	93	14.4	7.5 (10.1)	18	**6SL3120-■TE21-8AD0**	1.5	4 × 1.5	**6FX■002-5■N26-....**
1FK7105-3BC71-...	93	20.0	10.1 (13.5)	24	**6SL3120-1TE22-4AD0**	1.5	4 × 2.5	**6FX■002-5■N36-....**
1FK7060-3BF71-...	90	4.45	1.9 (2.5)	5	**6SL3120-■TE15-0AD0**	1	4 × 1.5	**6FX■002-5■N06-....**
1FK7062-3BF71-...	91	5.3	2.7 (3.6)	5	**6SL3120-■TE15-0AD0**	1	4 × 1.5	**6FX■002-5■N06-....**
1FK7081-3BF71-...	93	8.7	3.8 (5.1)	9	**6SL3120-■TE21-0AD0**	1	4 × 1.5	**6FX■002-5■N06-....**
1FK7084-3BF71-...	93	12.1	6.3 (8.4)	18	**6SL3120-■TE21-8AD0**	1	4 × 1.5	**6FX■002-5■N06-....**
1FK7101-3BF71-...	93	18.8	8.5 (11.4)	18	**6SL3120-■TE21-8AD0**	1.5	4 × 2.5	**6FX■002-5■N36-....**
1FK7103-3BF71-...	93	26.0	11.3 (15.2)	30	**6SL3120-1TE23-0AD0**	1.5	4 × 4	**6FX■002-5■N46-....**
1FK7042-3BK71-...	89	4.4	1.9 (2.5)	5	**6SL3120-■TE15-0AD0**	1	4 × 1.5	**6FX■002-5■N06-....**

Motor Module:	
Single Motor Module	**1**
Double Motor Module	**2**

Power cable:		
MOTION-CONNECT 800PLUS	**8**	
MOTION-CONNECT 500	**5**	
Without brake cores		**C**
With brake cores [4]		**D**
Length code		**....**

For information on the cables, refer to MOTION-CONNECT connection systems

[1] Optimum efficiency in continuous duty.

[2] With default setting of the pulse frequency.

[3] The current carrying capacity of the power cables complies with EN 60204-1 for installation type C, for continuous duty at an ambient air temperature of 40 °C (104 °F). Cable cross-section for brake connection 2 × 1.5 mm².

[4] Cable cross-section for brake connection 2 × 1.5 mm².

[5]
$$P_{calc}\,[\text{kW}] = \frac{M_0\,[\text{Nm}] \times n_{rated}}{9550} \qquad P_{calc}\,[\text{hp}] = \frac{M_0\,[\text{lb}_f\text{-ft}] \times n_{rated}}{5250}$$

© Siemens 2022

Selection and ordering data

Rated speed	Shaft height	Rated power	Static torque	Rated torque	Rated current	**SIMOTICS S-1FK7 Compact synchronous motors for Power Modules 230 V 1 AC**	No. of pole pairs	Moment of inertia rotor (without brake)	Weight (without brake)
n_{rated}	SH	P_{rated} at ΔT=100 K	M_0 at ΔT=100 K	M_{rated} at ΔT=100 K	I_{rated} at ΔT=100 K		p	J	m
rpm		kW (hp)	Nm (lb_f-ft)	Nm (lb_f-ft)	A	Article No.		10^{-4} kgm^2 (10^{-3} lb_f-in-s^2)	kg (lb)
SIMOTICS S-1FK7 Compact for DC link voltage 270 ... 330 V DC – Natural cooling									
3000	36	0.3 (0.4)	1.15 (0.85)	1.0 (0.7)	1.6	**1FK7032-2AF2■-1■■■**	3	0.65 (0.58)	2.7 (6.0)
		0.5 (0.7)	1.6 (1.2)	1.45 (1.07)	1.8	**1FK7034-2AF2■-1■■■**	3	0.9 (0.8)	3.5 (7.7)
	48	0.8 (1.1)	3.0 (2.2)	2.6 (1.9)	3.5	**1FK7042-2AF2■-1■■■**	4	2.9 (2.6)	4.6 (10.1)

Encoder systems for motors without DRIVE-CLiQ interface:	IC2048S/R encoder	**4**	**A**
	AM2048S/R encoder	**4**	**E**
	Multi-pole resolver	**4**	**S**
	2-pole resolver	**4**	**T**
Encoder systems for motors with DRIVE-CLiQ interface:	AS24DQI encoder	**1**	**B**
	AM24DQI encoder	**1**	**C**
	AS20DQI encoder	**1**	**Q**
	AM20DQI encoder	**1**	**R**
	R15DQ resolver	**1**	**U**
	R14DQ resolver	**1**	**P**

Shaft extension:	**Shaft and flange accuracy:**	**Holding brake:**	
Feather key	Tolerance N	Without	**A**
Feather key	Tolerance N	With	**B**
Plain shaft	Tolerance N	Without	**G**
Plain shaft	Tolerance N	With	**H**

Degree of protection:	IP64	**0**
	IP65	**1**
	IP65 and DE flange IP67	**2**

© Siemens 2022

Motor type (repeated)	Efficiency [1]	Stall current	Calculated power P_{calc} [5]	SINAMICS S120 blocksize format: Rated output current [2]	PM240-2 Power Module Internal air cooling. For further components, see SINAMICS S120 drive system	Power cable with complete shield, Motor connection (and brake connection) via power connector: Power connector	Cable cross-section [3]	Pre-assembled cable
	η	I_0 at M_0 ΔT=100 K	P_{calc} at M_0 ΔT=100 K	I_{rated}				
	%	A	kW (hp)	A	Article No.	Size	mm²	Article No.
				Line voltage 200 ... 240 V 1 AC				
1FK7032-2AF21-...	85	1.7	0.4 (0.5)	3.0	**6SL3210-1PB13-0■L0**	1	4 × 1.5	**6FX■002-5■G10-....**
1FK7034-2AF21-...	85	1.9	0.5 (0.7)	3.0	**6SL3210-1PB13-0■L0**	1	4 × 1.5	**6FX■002-5■G10-....**
1FK7042-2AF21-...	88	3.95	0.9 (1.2)	5.5	**6SL3210-1PB15-5■L0**	1	4 × 1.5	**6FX■002-5■G10-....**

Line filter:	
Without	**U**
Integrated	**A**

Power cable:		
MOTION-CONNECT 800PLUS	**8**	
MOTION-CONNECT 500	**5**	
Without brake cores		**C**
With brake cores [4]		**D**
Length code		**....**

For information on the cables, refer to MOTION-CONNECT connection systems

6

1) Optimum efficiency in continuous duty.
2) With default setting of the pulse frequency.
3) The current carrying capacity of the power cables complies with EN 60204-1 for installation type C, for continuous duty at an ambient air temperature of 40 °C (104 °F).
4) Cable cross-section for brake connection 2 × 1.5 mm².
5)

$$P_{calc}\,[\text{kW}] = \frac{M_0\,[\text{Nm}] \times n_{rated}}{9550} \qquad P_{calc}\,[\text{hp}] = \frac{M_0\,[\text{lb}_f\text{-ft}] \times n_{rated}}{5250}$$

© Siemens 2022

Selection and ordering data

Rated speed	Shaft height	Rated power	Static torque	Rated torque	Rated current	**SIMOTICS S-1FK7 Compact synchronous motors for Power Modules 230 V 1 AC**	No. of pole pairs	Moment of inertia rotor (without brake)	Weight (without brake)
n_{rated}	SH	P_{rated} at ΔT=100 K	M_0 at ΔT=100 K	M_{rated} at ΔT=100 K	I_{rated} at ΔT=100 K		p	J	m
rpm		kW (hp)	Nm (lb_f-ft)	Nm (lb_f-ft)	A	Article No.		10^{-4} kgm^2 (10^{-3} lb_f-in-s^2)	kg (lb)
SIMOTICS S-1FK7 Compact for DC link voltage 270 ... 330 V DC – Natural cooling									
6000	20	0.05 (0.07)	0.18 (0.13)	0.08 (0.06)	0.5	**1FK7011-5AK2■-1■■■**	4	0.064 (0.057)	0.9 (2.0)
		0.1 (0.1)	0.35 (0.26)	0.16 (0.12)	0.5	**1FK7015-5AK2■-1■■■**	4	0.083 (0.073)	1.1 (2.4)
	28	0.38 (0.51)	0.85 (0.63)	0.6 (0.4)	1.4	**1FK7022-5AK2■-1■■■**	3	0.28 (0.25)	1.8 (4.0)

Encoder systems for motors without DRIVE-CLiQ interface:	IC2048S/R encoder	**4**	**A**
	AM512S/R encoder (only for 1FK702)	**4**	**H**
	AM16S/R encoder	**4**	**J**
	Multi-pole resolver	**4**	**S**
	2-pole resolver	**4**	**T**
Encoder systems for motors with DRIVE-CLiQ interface: (Only for 1FK702) [1]	IC22DQ encoder	**1**	**D**
	AM20DQ encoder	**1**	**L**
	AM15DQ encoder	**1**	**V**
	R15DQ resolver	**1**	**U**
	R14DQ resolver	**1**	**P**

Shaft extension:	**Shaft and flange accuracy:**	**Holding brake:**	
Feather key	Tolerance N	Without	**A**
Feather key	Tolerance N	With	**B**
Plain shaft	Tolerance N	Without	**G**
Plain shaft	Tolerance N	With	**H**

Degree of protection:	**Paint finish:**	
IP64 (only for 1FK702)	Without	**0**
IP65 and DE flange IP67 (only for 1FK702)	Without	**2**
IP54 (only for 1FK701). IP64 (only for 1FK702)	With	**3**
IP65 and DE flange IP67 (only for 1FK702)	With	**5**

© Siemens 2022

Motor type (repeated)	Efficiency [1]	Stall current	Calculated power P_{calc} [5]	SINAMICS S120 blocksize format: Rated output current [2]	PM240-2 Power Module Internal air cooling. For further components, see SINAMICS S120 drive system	Power cable with complete shield, Motor connection (and brake connection) via power connector: Power connector	Cable cross-section [3]	Pre-assembled cable
	η	I_0 at M_0 ΔT=100 K	P_{calc} at M_0 ΔT=100 K	I_{rated}				
	%	A	kW (hp)	A	Article No.	Size	mm²	Article No.
				Line voltage 200 ... 240 V 1 AC				
1FK7011-5AK21-...	62	0.85	0.1 (0.1)	3.0	**6SL3210-1PB13-0■L0**	0.5	4 × 1.5	**6FX5002-5DN30-....**
1FK7015-5AK21-...	68	0.85	0.2 (0.3)	3.0	**6SL3210-1PB13-0■L0**	0.5	4 × 1.5	**6FX5002-5DN30-....**
1FK7022-5AK21-...	88	1.8	0.5 (0.7)	3.0	**6SL3210-1PB13-0■L0**	1	4 × 1.5	**6FX■002-5■G10-....**

Line filter:	
Without	**U**
Integrated	**A**

Power cable:		
MOTION-CONNECT 800PLUS	**8**	
MOTION-CONNECT 500	**5**	
Without brake cores		**C**
With brake cores [4]		**D**
Length code		**....**

For information on the cables, refer to MOTION-CONNECT connection systems

[1] Optimum efficiency in continuous duty.

[2] With default setting of the pulse frequency.

[3] The current carrying capacity of the power cables complies with EN 60204-1 for installation type C, for continuous duty at an ambient air temperature of 40 °C (104 °F).

[4] Cable cross-section for brake connection 2 × 1.5 mm².

[5]
$$P_{calc}\,[\text{kW}] = \frac{M_0\,[\text{Nm}] \times n_{rated}}{9550} \qquad P_{calc}\,[\text{hp}] = \frac{M_0\,[\text{lb}_f\text{-ft}] \times n_{rated}}{5250}$$

© Siemens 2022

Selection and ordering data

Rated speed	Shaft height	Rated power	Static torque	Rated torque	Rated current	**SIMOTICS S-1FK7 High Dynamic synchronous motors for Power Modules 230 V 1 AC**	No. of pole pairs	Moment of inertia rotor (without brake)	Weight (without brake)
n_{rated}	SH	P_{rated} at ΔT=100 K	M_0 at ΔT=100 K	M_{rated} at ΔT=100 K	I_{rated} at ΔT=100 K		p	J	m
rpm		kW (hp)	Nm (lb_f-ft)	Nm (lb_f-ft)	A	Article No.		10^{-4} kgm^2 (10^{-3} lb_f-in-s^2)	kg (lb)
SIMOTICS S-1FK7 High Dynamic for DC link voltage 270 ... 330 V DC – Natural cooling									
3000	36	0.4 (0.5)	1.3 (1.0)	1.2 (0.9)	2.05	**1FK7033-4CF2■-1■■■**	3	0.25 (0.22)	3.0 (6.6)
	48	0.9 (1.2)	3.3 (2.4)	3.0 (2.2)	3.7	**1FK7043-4CF2■-1■■■**	3	1 (0.89)	6.0 (13.2)

Encoder systems for motors without DRIVE-CLiQ interface:	IC2048S/R encoder	**4**	**A**	
	AM2048S/R encoder	**4**	**E**	
	Multi-pole resolver	**4**	**S**	
	2-pole resolver	**4**	**T**	
Encoder systems for motors with DRIVE-CLiQ interface:	AS24DQI encoder	**1**	**B**	
	AM24DQI encoder	**1**	**C**	
	AS20DQI encoder	**1**	**Q**	
	AM20DQI encoder	**1**	**R**	
	R15DQ resolver	**1**	**U**	
	R14DQ resolver	**1**	**P**	
Shaft extension: / **Shaft and flange accuracy:** / **Holding brake:**	Feather key / Tolerance N / Without		**A**	
	Feather key / Tolerance N / With		**B**	
	Plain shaft / Tolerance N / Without		**G**	
	Plain shaft / Tolerance N / With		**H**	
Degree of protection:	IP64			**0**
	IP65			**1**
	IP65 and DE flange IP67			**2**

© Siemens 2022

Motor type (repeated)	Efficiency [1]	Stall current	Calculated power P_{calc} [5]	SINAMICS S120 blocksize format: Rated output current [2]	PM240-2 Power Module Internal air cooling. For further components, see SINAMICS S120 drive system	Power cable with complete shield, Motor connection (and brake connection) via power connector: Power connector	Cable cross-section [3]	Pre-assembled cable
	η	I_0 at M_0 ΔT=100 K	P_{calc} at M_0 ΔT=100 K	I_{rated}				
	%	A	kW (hp)	A	Article No.	Size	mm²	Article No.
				Line voltage 200 ... 240 V 1 AC				
1FK7033-4CF21-...	86	2.1	0.4 (0.5)	3.0	**6SL3210-1PB13-0■L0**	1	4 × 1.5	**6FX■002-5■G10-....**
1FK7043-4CF21-...	88	3.9	1 (1.34)	5.5	**6SL3210-1PB15-5■L0**	1	4 × 1.5	**6FX■002-5■G10-....**

Line filter:	
Without	**U**
Integrated	**A**

Power cable:			
MOTION-CONNECT 800PLUS	**8**		
MOTION-CONNECT 500	**5**		
Without brake cores		**C**	
With brake cores [4]		**D**	
Length code			**....**

For information on the cables, refer to MOTION-CONNECT connection systems

1) Optimum efficiency in continuous duty.
2) With default setting of the pulse frequency.
3) The current carrying capacity of the power cables complies with EN 60204-1 for installation type C, for continuous duty at an ambient air temperature of 40 °C (104 °F).
4) Cable cross-section for brake connection 2 × 1.5 mm².
5)

$$P_{calc}\,[\text{kW}] = \frac{M_0\,[\text{Nm}] \times n_{rated}}{9550} \qquad P_{calc}\,[\text{hp}] = \frac{M_0\,[\text{lb}_f\text{-ft}] \times n_{rated}}{5250}$$

© Siemens 2022

Built-in holding brakes for SIMOTICS S-1FT7/S-1FK7 motors

Overview

Many drives need a holding brake with an EMERGENCY STOP function for safety reasons or to meet process requirements.

The permanent magnet single-surface brakes used on the SIMOTICS S-1FT7/S-1FK7 motors function according to the closed-circuit principle. The magnetic field of the permanent-magnet exerts a tension on the brake anchor plate, i.e. in a condition of zero current, the brake is closed and the motor shaft thereby stopped. When the rated voltage of 24 V DC ± 10% is applied to the brake, current flows through the coil and produces a counter-field that cancels the pull of the permanent-magnet, causing the brake to release.

In the event of an EMERGENCY STOP or power outage, approximately 2000 braking operations can be performed with the maximum switched energy without causing excessive wear on the holding brake. Condition:
Maximum external moment of inertia = moment of inertia of motor and n_{max} type-specific.

The holding brake is not an operational or safety brake.

In order to avoid switching overvoltages and any related effects on the plant environment, the brake cables must be connected externally with a varistor. The connection is made via the power connector or the terminal box.

When connected to the SINAMICS S120 drive system, this overvoltage protection is provided by the SINAMICS system.

Technical specifications

Motor		Built-in holding brake					
Shaft height SH	Type	Holding torque [1]	Direct current	Opening time with varistor	Closing time with varistor	Moment of inertia	Maximum switched energy per brake operation from n = 3000 rpm
		Nm (lb$_f$-ft)	A	ms	ms	10^{-4} kgm^2 (10^{-3} lb$_f$-in-s^2)	J
SIMOTICS S-1FT7 with permanent-magnet brake, without backlash, and SIMOTICS S-1FK7 with option N24							
36	1FT703	3 (2.21)	0.3	60	25	0.12 (0.11)	30
48	1FT704	8 (5.90)	0.6	90	30	0.87 (0.77)	270
63	1FT706	18 (13.3)	0.8	150	50	2.84 (2.51)	880
80	1FT708	48 (35.4)	1.0	220	65	15.4 (13.6)	1900
100	1FT710	85 (62.7)	1.6	250	70	27.6 (24.4)	5300
132	1FT713	140 (103)	1.8	350	70	51.0 (45.1)	9800
SIMOTICS S-1FK7 Compact/High Dynamic/High Inertia motors with permanent magnet brake, without backlash							
10	1FK701	0.4 (0.3)	0.3	30	20	0.019 (0.017)	2
28	1FK7022	1.0 (0.7)	0.3	30	20	0.07 (0.06)	8
36	1FK703	1.9 (1.4)	0.3	50	30	0.098 (0.087)	40
48	1FK704	4.0 (3.0)	0.5	70	30	0.32 (0.28)	150
63	1FK706	13 (9.59)	0.8	100	50	0.99 (0.88)	380
80	1FK708	22 (16.2)	0.9	200	60	3.28 (2.90)	1400
100	1FK7100	23 (17.0)	1.0	300	70	7.5 (6.6)	3380
100	1FK7101 1FK7103 1FK7105	43 (31.7)	1.0	300	70	7.5 (6.6)	3380

[1] The holding torque is the highest permissible torque with which the closed brake can be loaded in steady-state operation without slip (holding function when motor is stationary).

© Siemens 2022

Overview

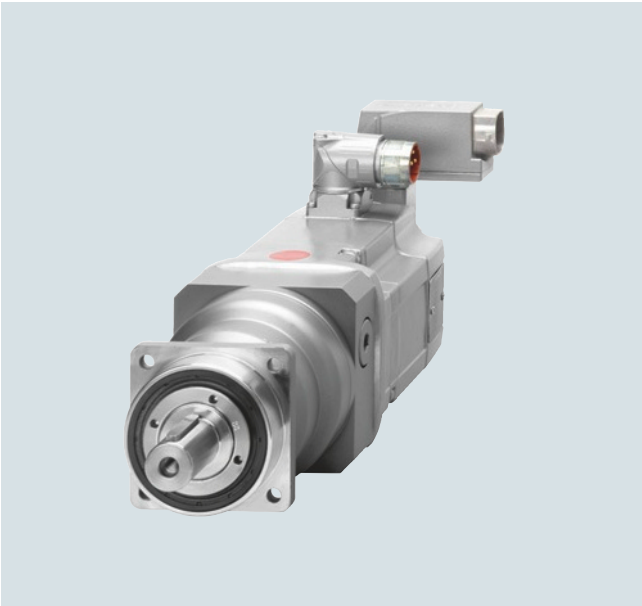

SIMOTICS S-1FT7 motor with mounted SP+ series planetary gearbox

SIMOTICS S-1FT7 motors can be combined with planetary gearboxes to form compact coaxial drive units. The gearboxes are flanged directly to the drive end of the motors.

When selecting the gearbox, ensure that its maximum permissible input speed is not exceeded by the maximum speed of the motor. In the case of high operating frequencies, allowance must be made for the factor f_2 (see Configuration Manual, SIMOTICS S-1FT7 synchronous motors). The frictional losses of the gearbox must always be taken into account when engineering geared drives.

The gearboxes are only available in non-balanced design.

Benefits

- High efficiency;
  1-stage: > 97 %,
  2-stage: > 94 %
- Minimum torsional backlash
  1-stage: ≤ 4 arcmin
  2-stage: ≤ 6 arcmin
- Power transmission from the central sun wheel via planet wheels
- No shaft deflections in the planet wheel set due to symmetrical force distribution
- Very low moment of inertia and thus short acceleration times of the motors
- Output shaft bearings dimensioned for high cantilever and axial loads with preloaded tapered-roller bearings
- The gearboxes are connected to the motor shaft via an integrated clamping hub. A plain motor shaft extension is necessary for this purpose. Shaft and flange accuracy tolerance N in accordance with DIN 42955 and vibration magnitude grade A in accordance with EN 60034-14 are sufficient. The motor flange is adapted by means of adapter plates.
- Output shaft of gearbox exactly coaxial with the motor
- The gearboxes are enclosed (seal between gearbox and motor) and filled with oil at the factory. They are lubricated and sealed for their service life.
  The gearboxes are suitable for all mounting positions.
- Degree of protection of gearbox: IP65
- Small dimensions
- Low weight

Integration

SIMOTICS S-1FT703 to S-1FT710 motors can be supplied ex works (Siemens AG) complete with flange-mounted planetary gearbox.

The gearboxes assigned to the individual motors and gear ratios *i* available for these motor/gearbox combinations are listed in the subsequent selection table. The maximum permissible input speed of the gearbox (this is the same as the maximum motor speed) must be taken into account when a gearbox is selected.

The motor/gearbox combinations listed in the selection tables are mainly intended for cycle operation S3-60% (ON time ≤ 60% and ≤ 20 min). Reduced maximum motor speeds and output torques apply for use in S1 continuous duty (ON time > 60% or > 20 min). The gearbox temperature must not exceed 90 °C (194 °F).

Follow the instructions contained in the Configuration Manual for SIMOTICS S-1FT7 synchronous motors when assigning gearboxes to the motor.

© Siemens 2022

Selection and ordering data

Motor	Planetary gearbox 1-stage			Available gear ratio *i* =				Motor speed, max. S3-60%	Output torque, max. S3-60%	Radial output shaft loading, max. [1]	Axial output shaft loading, max. [1]
Type	Type	Torsional backlash	Gearbox weight, approx.	4	5	7	10	n_{G1} (n_1)	M_{G2} (T_{2B})	F_r (F_{2Rmax})	F_a (F_{2Amax})
		arcmin	kg (lb)					rpm	Nm (lb_f-ft)	N (lb_f)	N (lb_f)
1FT7034	SP 060S-MF1	≤ 4	1.9 (4.2)	✔	✔	✔	–	7500	50 (36.9)	2800 (629)	2400 (540)
1FT7034	SP 075S-MF1	≤ 4	3.9 (8.6)	–	–	–	✔	7500	132 (97.4)	4200 (944)	3350 (753)
1FT7036				✔	✔	✔	✔		(114 (84.1) for *i* = 10)		
1FT7042				✔	✔	✔	✔				
1FT7044				✔	✔	✔	✔				
1FT7046				✔	✔	✔	–				
1FT7046	SP 100S-MF1	≤ 3	7.7 (17.0)	–	–	–	✔	5500	378 (279)	6600 (1484)	5650 (1270)
1FT7062				✔	✔	✔	✔		(282 (208) for *i* = 10)		
1FT7064				✔	✔	✔	✔				
1FT7065				✔	✔	✔	–				
1FT7066				✔	✔	✔	✔				
1FT7067				✔	✔	✔	–				
1FT7068				✔	✔	✔	–				
1FT7065	SP 140S-MF1	≤ 3	17.2 (37.9)	–	–	–	✔	5000	792 (584)	9900 (2226)	9870 (2219)
1FT7067				–	–	–	✔		(636 (469) for *i* = 10)		
1FT7068				–	–	–	✔				
1FT7082				✔	✔	✔	✔				
1FT7084				✔	✔	✔	✔				
1FT7085				✔	✔	✔	–				
1FT7086				✔	✔	✔	–				
1FT7087				✔	✔	–	–				
1FT7085	SP 180S-MF1	≤ 3	34 (75.0)	–	–	–	✔	4500	1452 (1071)	15400 (3462)	15570 (3500)
1FT7086				–	–	–	✔		(1164 (859) for *i* = 10)		
1FT7087				–	–	✔	✔				
1FT7102				✔	✔	✔	✔				
1FT7105				✔	✔	✔	–				
1FT7108				✔	✔	✔	–				
1FT7105	SP 210S-MF1	≤ 3	56 (123)	–	–	–	✔	3000	3000 (2880 (2124) for *i* = 7 2280 (1682) for *i* = 10)	21000 (4721)	30000 (6744)
1FT7108				–	–	–	✔				
1FT7132				✔	✔	✔	✔				
1FT7134				✔	✔	✔	–				
1FT7136				✔	✔	✔	–				
1FT7138				✔	✔	✔	–				
1FT7134	SP 240S-MF1	≤ 3	83 (183)	–	–	–	✔	3000	5400 (5160 (3806) for *i* = 7 4000 (2950) for *i* = 10)	30000 (6744)	33000 (7419)
1FT7136				–	–	–	✔				
1FT7138				–	–	–	–				
	Gear shaft			Order code							
	With feather key			**J02**	**J03**	**J05**	**J09**				
	Without feather key			**J22**	**J23**	**J25**	**J29**				

Requirements:

SP+ planetary gearboxes can be mounted with the following motor versions:
- Flange compatible with 1FT6/1FK7
- Plain motor shaft extension, shaft and flange accuracy tolerance N, without/with holding brake
- Vibration severity grade A/IP65 degree of protection

SP+ planetary gearboxes can therefore only be ordered with these motors: **1FT7...-....1-..G1**, **1FT7...-....1-..H1, 1FT7...-....4-..G1, 1FT7...-....4-..H1**

When ordering a motor with gearbox, **-Z** must be added to the Article No.

Example:
- 1FT7042 motor without holding brake
- With single-stage SP+ planetary gearbox
- With *i* = 5 and gear shaft without feather key

1FT7042-5AF74-1NG1-Z
J23

✔ Possible
– Not possible
[1] Referred to output shaft center.

© Siemens 2022

Technical specifications

SIMOTICS S-1FT7 motor with SP+ planetary gearbox

Single-stage Type	Gear ratio	Motor speed	Output torque	Moments of inertia of gearboxes (referred to the drive)					
		Continuous duty S1 [1]		1FT703.	1FT704.	1FT706.	1FT708.	1FT710.	1FT713.
	i	n_{rated1}	M_{rated2} (T_{2rated})	J_1	J_1	J_1	J_1	J_1	J_1
		rpm	Nm (lb_f-ft)	$kgcm^2$ (lb_f-in^2)	$kgcm^2$ (lb_f-in^2)	$kgcm^2$ (lb_f-in^2)	$kgcm^2$ (lb_f-in^2)	$kgcm^2$ (lb_f-in^2)	$kgcm^2$ (lb_f-in^2)
SP 060S-MF1	4	3300	27 (19.9)	0.22 (0.08)	–	–	–	–	–
	5	3300	27 (19.9)	0.20 (0.07)	–	–	–	–	–
	7	4000	26 (19.2)	0.18 (0.06)	–	–	–	–	–
SP 075S-MF1	4	2900	81 (59.7)	0.61 (0.21)	0.78 (0.27)	–	–	–	–
	5	2900	81 (59.7)	0.51 (0.17)	0.68 (0.23)	–	–	–	–
	7	3100	81 (59.7)	0.42 (0.14)	0.59 (0.20)	–	–	–	–
	10	3100	81 (59.7)	0.38 (0.13)	0.54 (0.18)	–	–	–	–
SP 100S-MF1	4	2500	171 (126)	–	–	3.04 (1.04)	–	–	–
	5	2500	169 (125)	–	–	2.61 (0.89)	–	–	–
	7	2800	166 (122)	–	–	2.29 (0.78)	–	–	–
	10	2800	174 (128)	–	1.38 (0.47)	2.07 (0.71)	–	–	–
SP 140S-MF1	4	2100	335 (247)	–	–	–	11.0 (3.8)	–	–
	5	2100	333 (246)	–	–	–	9.95 (3.40)	–	–
	7	2600	319 (235)	–	–	–	9.00 (3.08)	–	–
	10	2600	327 (241)	–	–	5.28 (1.80)	8.44 (2.88)	–	–
SP 180S-MF1	4	1500	927 (684)	–	–	–	–	33.9 (11.6)	–
	5	1500	919 (678)	–	–	–	–	27.9 (9.5)	–
	7	2300	825 (609)	–	–	–	–	22.2 (7.6)	–
	10	2300	864 (637)	–	–	–	19.2 (6.6)	19.2 (6.6)	–
SP 210S-MF1	4	1200	1895 (1398)	–	–	–	–	–	94.3 (32.2)
	5	1500	1767 (1303)	–	–	–	–	–	76.9 (26.3)
	7	1700	1731 (1277)	–	–	–	–	–	61.5 (21.0)
	10	2000	1708 (1260)	–	–	–	–	53.1 (18.1)	53.1 (18.1)
SP 240S-MF1	10	1700	2735 (2017)	–	–	–	–	–	70.8 (24.2)

[1] The limit values in the table apply for S1 continuous duty (ON time > 60% or > 20 min) for a maximum gearbox temperature of 90 °C (194 °F).

© Siemens 2022

Selection and ordering data

Motor	Planetary gearbox 2-stage			Available gear ratio i =					Motor speed, max. S3-60%	Output torque, max. S3-60%	Radial output shaft loading, max.[1]	Axial output shaft loading, max.[1]
Type	Type	Torsional backlash	Gearbox weight, approx.	16	20	28	40	50	n_{G1} (n_1)	M_{G2} (T_{2B})	F_r (F_{2Rmax})	F_a (F_{2Amax})
		arcmin	kg (lb)						rpm	Nm (lb_f-ft)	N (lb_f)	N (lb_f)
1FT7034	SP 075S-MF2	≤ 6	3.6 (7.9)	✔	✔	✔	–	–	8500	126 (92.9)	4200 (944)	3350 (753)
1FT7036				✔	–	–	–	–				
1FT7042				✔	–	–	–	–				
1FT7034	SP 100S-MF2	≤ 5	7.9 (17.4)	–	–	–	✔	✔	6500	347 (256)	6600 (1484)	5650 (1270)
1FT7036				–	✔	✔	✔	✔				
1FT7042				–	✔	✔	✔	✔				
1FT7044				✔	✔	✔	–	–				
1FT7046				✔	✔	–	–	–				
1FT7062				✔	✔	–	–	–				
1FT7064				✔	–	–	–	–				
1FT7044	SP 140S-MF2	≤ 5	17 (37.5)	–	–	–	✔	✔	6000	726 (535) (670 (494) for i = 50)	9900 (2226)	9870 (2219)
1FT7046				–	–	✔	✔	✔				
1FT7062				–	–	✔	✔	✔				
1FT7064				–	✔	✔	–	–				
1FT7065				✔	✔	–	–	–				
1FT7066				✔	✔	–	–	–				
1FT7067				✔	–	–	–	–				
1FT7068				✔	✔	–	–	–				
1FT7082				✔	✔	–	–	–				
1FT7084				✔	–	–	–	–				
1FT7064	SP 180S-MF2	≤ 5	36.4 (80.3)	–	–	–	✔	✔	5000	1452 (1071)	15400 (3462)	15570 (3500)
1FT7065				–	–	✔	✔	–				
1FT7066				–	–	✔	✔	✔				
1FT7067				–	✔	✔	–	–				
1FT7068				–	–	✔	✔	✔				
1FT7082				–	–	✔	✔	✔				
1FT7084				–	✔	✔	–	–				
1FT7085				✔	–	–	–	–				
1FT7086				✔	✔	–	–	–				
1FT7102				✔	✔	–	–	–				
1FT7084	SP 210S-MF2	≤ 5	55 (121)	–	–	–	✔	✔	4500	2880 (2124) (3000 (2213) for i = 20 2840 (2095) for i = 40)	21000 (4721)	30000 (6744)
1FT7085				–	✔	✔	–	–				
1FT7086				–	–	✔	✔	–				
1FT7087				✔	✔	✔	–	–				
1FT7102				–	–	✔	–	–				
1FT7105				✔	✔	–	–	–				
1FT7108				✔	–	–	–	–				
1FT7085	SP 240S-MF2	≤ 5	80.6 (177.7)	–	–	–	✔	✔	4500	5400 (3983) (4400 (3245) for i = 40 5160 (3806) for i = 50)	30000 (6744)	33000 (7419)
1FT7086				–	–	–	–	✔				
1FT7102				–	–	–	✔	✔				
1FT7105				–	–	✔	✔	–				
1FT7108				–	✔	✔	–	–				
1FT7132				✔	✔	–	–	–				
1FT7134				✔	–	–	–	–				
1FT7136				✔	–	–	–	–				
	Gear shaft			**Order code**								
	With feather key			**J12**	**J13**	**J15**	**J16**	**J17**				
	Without feather key			**J32**	**J33**	**J35**	**J36**	**J37**				

Preconditions, see page 6/62.

✔ Possible
– Not possible

[1] Referred to output shaft center.

© Siemens 2022

Technical specifications

SIMOTICS S-1FT7 motor with SP+ planetary gearbox

Two-stage Type	Gear ratio	Motor speed	Output torque	Moments of inertia of gearboxes (referred to the drive)					
		Continuous duty S1[1]		1FT703.	1FT704.	1FT706.	1FT708.	1FT710.	1FT713.
	i	n_{rated1}	M_{rated2} (T_{2rated})	J_1	J_1	J_1	J_1	J_1	J_1
		rpm	Nm (lb_f-ft)	$kgcm^2$ (lb_f-in^2)	$kgcm^2$ (lb_f-in^2)	$kgcm^2$ (lb_f-in^2)	$kgcm^2$ (lb_f-in^2)	$kgcm^2$ (lb_f-in^2)	$kgcm^2$ (lb_f-in^2)
SP 075S-MF2	16	3500	101 (74.5)	0.23 (0.08)	0.55 (0.19)	–	–	–	–
	20	3500	101 (74.5)	0.20 (0.07)	–	–	–	–	–
	28	3500	101 (74.5)	0.18 (0.06)	–	–	–	–	–
SP 100S-MF2	16	3100	243 (179)	–	0.81 (0.28)	2.18 (0.74)	–	–	–
	20	3100	259 (191)	0.54 (0.18)	0.70 (0.24)	2.07 (0.71)	–	–	–
	28	3100	277 (204)	0.43 (0.15)	0.60 (0.21)	–	–	–	–
	40	3100	277 (204)	0.38 (0.13)	0.55 (0.19)	–	–	–	–
	50	3500	277 (204)	0.38 (0.13)	0.54 (0.18)	–	–	–	–
SP 140S-MF2	16	2900	461 (340)	–	–	3.19 (1.09)	10.3 (3.5)	–	–
	20	2900	493 (364)	–	–	2.71 (0.93)	9.77 (3.34)	–	–
	28	2900	545 (402)	–	1.65 (0.56)	2.34 (0.80)	–	–	–
	40	2900	581 (429)	–	1.40 (0.48)	2.10 (0.72)	–	–	–
	50	3200	536 (395)	–	1.39 (0.47)	2.08 (0.71)	–	–	–
SP 180S-MF2	16	2700	1162 (857)	–	–	–	12.4 (4.2)	13.5 (4.6)	–
	20	2700	1162 (857)	–	–	–	10.9 (3.7)	12.0 (4.1)	–
	28	2700	1162 (857)	–	–	6.32 (2.16)	9.48 (3.24)	–	–
	40	2700	1162 (857)	–	–	5.51 (1.88)	8.67 (2.96)	–	–
	50	2900	1162 (857)	–	–	5.45 (1.86)	8.61 (2.94)	–	–
SP 210S-MF2	16	2500	1274 (940)	–	–	–	–	34.5 (11.8)	–
	20	2500	1266 (934)	–	–	–	–	31.5 (10.8)	–
	28	2500	1294 (954)	–	–	–	30.0 (10.3)	30.0 (10.3)	–
	40	2500	1358 (1002)	–	–	–	28.5 (9.7)	–	–
	50	2500	1679 (1238)	–	–	–	28.3 (9.7)	–	–
SP 240S-MF2	16	2300	2658 (1961)	–	–	–	–	–	39.2 (13.4)
	20	2500	2596 (1915)	–	–	–	–	34.6 (11.8)	34.6 (11.8)
	28	2500	2667 (1967)	–	–	–	–	30.5 (10.4)	–
	40	2500	2803 (2067)	–	–	–	28.2 (9.6)	28.2 (9.6)	–
	50	2500	3457 (2550)	–	–	–	27.9 (9.5)	27.9 (9.5)	–

[1] The limit values in the table apply for S1 continuous duty (ON time > 60% or > 20 min) for a maximum gearbox temperature of 90 °C (194 °F).

© Siemens 2022

Overview

SIMOTICS S-1FK7 motor with mounted SP+ planetary gearbox

SIMOTICS S-1FK7 motors can easily be combined with planetary gearboxes to form compact coaxial drive units. The gearboxes are flanged directly to the drive end of the motors.

When selecting the gearbox, ensure that its maximum permissible input speed is not exceeded by the maximum speed of the motor. In the case of high operating frequencies, allowance must be made for the factor f_2 (see Configuration Manual, SIMOTICS S-1FK7 synchronous motors). The frictional losses of the gearbox must always be taken into account when engineering geared drives.

The gearboxes are only available in non-balanced design.

Benefits

- High efficiency;
  1-stage: > 97 %,
  2-stage: > 94 %
- Minimum torsional backlash
  1-stage: ≤ 4 arcmin
  2-stage: ≤ 6 arcmin
- Power transmission from the central sun wheel via planet wheels
- No shaft deflections in the planet wheel set due to symmetrical force distribution
- Very low moment of inertia and thus short acceleration times of the motors
- Output shaft bearings dimensioned for high cantilever and axial loads with preloaded tapered-roller bearings
- The gearboxes are connected to the motor shaft via an integrated clamping hub. A plain motor shaft extension is necessary for this purpose. Shaft and flange accuracy tolerance N in accordance with DIN 42955 and vibration magnitude grade A in accordance with EN 60034-14 are sufficient. The motor flange is adapted by means of adapter plates.
- Output shaft of gearbox exactly coaxial with the motor
- The gearboxes are enclosed (seal between gearbox and motor) and filled with oil at the factory. They are lubricated and sealed for their service life.
  The gearboxes are suitable for all mounting positions.
- Degree of protection of gearbox: IP65
- Small dimensions
- Low weight

Integration

SIMOTICS S-1FK7 motors can be supplied ex works (Siemens AG) in the shaft heights 28 to 100, complete with flange-mounted planetary gearbox.

The gearboxes assigned to the individual motors and gear ratios *i* available for these motor/gearbox combinations are listed in the subsequent selection table. The maximum permissible input speed of the gearbox (this is the same as the maximum motor speed) must be taken into account when a gearbox is selected.

The motor/gearbox combinations listed in the selection table are mainly intended for cycle operation S3-60 % (ON time ≤ 60 % and ≤ 20 min). Reduced maximum motor speeds and output torques apply for use in S1 continuous duty (ON time > 60% or > 20 min). The gearbox temperature must not exceed 90 °C (194 °F).

Follow the instructions contained in the Configuration Manual for SIMOTICS S-1FK7 synchronous motors when assigning gearboxes to the motor.

© Siemens 2022

Selection and ordering data

Motor	Planetary gearbox 1-stage			Available gear ratio *i* =				Motor speed, max. S3-60%	Output torque, max. S3-60%	Radial output shaft loading, max. [1]	Axial output shaft loading, max. [1]
Type	Type	Torsional backlash	Gearbox weight, approx.	4	5	7	10	n_{G1} (n_1)	M_{G2} (T_{2B})	F_r (F_{2Rmax})	F_a (F_{2Amax})
		arcmin	kg (lb)					rpm	Nm (lb_f-ft)	N (lb_f)	N (lb_f)
1FK7022	SP 060S-MF1	≤ 4	1.9 (4.2)	✔	✔	✔	✔	7500	50 (36.9)	2800 (629)	2400 (540)
1FK7032				✔	✔	✔	✔		(38 (28.0) for *i* = 10)		
1FK7033				✔	✔	✔	✔				
1FK7034				✔	✔	✔	✔				
1FK7040	SP 075S-MF1	≤ 4	3.9 (8.6)	✔	✔	✔	✔	7500	132 (97.4)	4200 (944)	3350 (753)
1FK7042				✔	✔	✔	✔		(114 (84.1) for *i* = 10)		
1FK7043				✔	✔	✔	✔				
1FK7044				✔	✔	✔	✔				
1FK7060	SP 100S-MF1	≤ 3	7.7 (17.0)	✔	✔	✔	✔	5500	378 (279)	6600 (1484)	5650 (1270)
1FK7061				✔	✔	✔	✔		(282 (208) for *i* = 10)		
1FK7062				✔	✔	✔	✔				
1FK7063				✔	✔	✔	✔				
1FK7064				✔	✔	✔	✔				
1FK7080	SP 140S-MF1	≤ 3	17.2 (37.9)	✔	✔	✔	✔	5000	792 (584)	9900 (2226)	9870 (2219)
1FK7081				✔	✔	✔	✔		(636 (469) for *i* = 10)		
1FK7083				✔	✔	✔	✔				
1FK7084				✔	✔	✔	✔				
1FK7085				✔	✔	✔	✔				
1FK7086				✔	✔	✔	✔				
1FK7100	SP 180S-MF1	≤ 3	34 (75.0)	✔	✔	✔	✔	4500	1452 (1071)	15400 (3462)	15570 (3500)
1FK7101				✔	✔	✔	✔		(1164 (859) for *i* = 10)		
1FK7103				✔	✔	✔	✔				
1FK7105				✔	✔	✔	–				
1FK7105	SP 210S-MF1	≤ 3	56 (123)	–	–	–	✔	3000	2280 (1682)	21000 (4721)	30000 (6744)

Gear shaft	Order code			
With feather key	**J02**	**J03**	**J05**	**J09**
Without feather key	**J22**	**J23**	**J25**	**J29**

Requirements:

SP+ planetary gearboxes can be mounted with the following motor versions:

- Plain motor shaft extension, shaft and flange accuracy tolerance N, without/with holding brake
- IP65 degree of protection and paint finish

SP+ planetary gearboxes can therefore only be ordered with these motors:

1FK7 . . . - 2 A . . . - . . ■ 1 Compact
1FK7 . . . - 3 B . . . - . . ■ 1 High Inertia
1FK7 . . . - 4 C . . . - . . ■ 1 High Dynamic
G without brake
H with brake

or

1FK7 0 2 . - 5 A . . . - . . G 5
1FK7 0 2 . - 5 A . . . - . . H 5

When ordering a motor with gearbox, **-Z** must be added to the Article No.

Example:

1FK7042 motor without holding brake
with single-stage SP+ planetary gearbox
with *i* = 7 and gear shaft without feather key.
1FK7042-2AF74-1AG1-**Z**
J25

✔ Possible
– Not possible
[1] Referred to output shaft center.

© Siemens 2022

Technical specifications

SIMOTICS S-1FK7 motor with SP+ planetary gearbox

Single-stage Type	Gear ratio	Motor speed	Output torque	Moments of inertia of gearboxes (referred to the drive)					
		Continuous duty S1 [1]		1FK702.	1FK703.	1FK704.	1FK706.	1FK708.	1FK710.
	i	n_{rated1}	M_{rated2} (T_{2rated})	J_1	J_1	J_1	J_1	J_1	J_1
		rpm	Nm (lb$_f$-ft)	kgcm^2 (lb$_f$-in^2)	kgcm^2 (lb$_f$-in^2)	kgcm^2 (lb$_f$-in^2)	kgcm^2 (lb$_f$-in^2)	kgcm^2 (lb$_f$-in^2)	kgcm^2 (lb$_f$-in^2)
SP 060S-MF1	4	3300	27 (19.9)	0.15 (0.05)	0.22 (0.08)	–	–	–	–
	5	3300	27 (19.9)	0.12 (0.04)	0.20 (0.07)	–	–	–	–
	7	4000	26 (19.2)	0.10 (0.03)	0.18 (0.06)	–	–	–	–
	10	4000	27 (19.9)	0.09 (0.03)	0.16 (0.05)	–	–	–	–
SP 075S-MF1	4	2900	81 (59.7)	–	–	0.78 (0.27)	–	–	–
	5	2900	81 (59.7)	–	–	0.68 (0.23)	–	–	–
	7	3100	81 (59.7)	–	–	0.59 (0.20)	–	–	–
	10	3100	81 (59.7)	–	–	0.54 (0.18)	–	–	–
SP 100S-MF1	4	2500	171 (126)	–	–	–	3.04 (1.04)	–	–
	5	2500	169 (125)	–	–	–	2.61 (0.89)	–	–
	7	2800	166 (122)	–	–	–	2.29 (0.78)	–	–
	10	2800	174 (128)	–	–	–	2.07 (0.71)	–	–
SP 140S-MF1	4	2100	335 (247)	–	–	–	–	11.0 (3.8)	–
	5	2100	333 (246)	–	–	–	–	9.95 (3.40)	–
	7	2600	319 (235)	–	–	–	–	9.00 (3.08)	–
	10	2600	327 (241)	–	–	–	–	8.44 (2.88)	–
SP 180S-MF1	4	1500	927 (684)	–	–	–	–	–	33.9 (11.6)
	5	1500	919 (678)	–	–	–	–	–	27.9 (9.5)
	7	2300	825 (609)	–	–	–	–	–	22.2 (7.6)
	10	2300	864 (637)	–	–	–	–	–	19.2 (6.6)
SP 210S-MF1	10	2000	1708 (1260)	–	–	–	–	–	53.1 (18.1)

[1] The limit values in the table apply for S1 continuous duty (ON time > 60% or > 20 min) for a maximum gearbox temperature of 90 °C (194 °F).

© Siemens 2022

Selection and ordering data

Motor	Planetary gearbox 2-stage			Available gear ratio i =					Motor speed, max. S3-60%	Output torque, max. S3-60%	Radial output shaft loading, max. [1]	Axial output shaft loading, max. [1]
Type	Type	Torsional backlash	Gearbox weight, approx.	16	20	28	40	50	n_{G1} (n_1)	M_{G2} (T_{2B})	F_r (F_{2Rmax})	F_a (F_{2Amax})
		arcmin	kg (lb)						rpm	Nm (lb_f-ft)	N (lb_f)	N (lb_f)
1FK7022	SP 060S-MF2	≤ 6	2 (4.41)	✔	✔	✔	–	–	8500	50 (36.9)	2800 (629)	2400 (540)
1FK7032				✔	✔	–	–	–				
1FK7033				✔	✔	–	–	–				
1FK7022	SP 075S-MF2	≤ 6	3.6 (7.9)	–	–	–	✔	✔	8500	126 (92.9) (132 (97.4) for i = 50)	4200 (944)	3350 (753)
1FK7032				–	–	✔	✔	✔				
1FK7033				–	–	✔	✔	✔				
1FK7034				✔	✔	✔	–	–				
1FK7040				✔	✔	✔	–	–				
1FK7042				✔	✔	–	–	–				
1FK7043				✔	–	–	–	–				
1FK7034	SP 100S-MF2	≤ 5	7.9 (17.4)	–	–	–	✔	✔	6500	347 (256)	6600 (1484)	5650 (1270)
1FK7040				–	–	–	✔	✔				
1FK7042				–	–	✔	✔	✔				
1FK7043				–	✔	✔	✔	✔				
1FK7044				✔	✔	✔	✔	–				
1FK7060				✔	✔	✔	–	–				
1FK7061				✔	✔	–	–	–				
1FK7062				✔	✔	–	–	–				
1FK7044	SP 140S-MF2	≤ 5	17 (37.5)	–	–	–	–	✔	6000	726 (535) (670 (494) for i = 50)	9900 (2226)	9870 (2219)
1FK7060				–	–	–	✔	✔				
1FK7061				–	–	✔	✔	✔				
1FK7062				–	–	✔	✔	–				
1FK7063				✔	✔	✔	–	–				
1FK7064				✔	✔	✔	–	–				
1FK7080				✔	✔	✔	✔	–				
1FK7081				✔	✔	✔	–	–				
1FK7083				✔	✔	–	–	–				
1FK7084				✔	–	–	–	–				
	Gear shaft			Order code								
	With feather key			**J12**	**J13**	**J15**	**J16**	**J17**				
	Without feather key			**J32**	**J33**	**J35**	**J36**	**J37**				

Requirements:

SP+ planetary gearboxes can be mounted with the following motor versions:

- Plain motor shaft extension, shaft and flange accuracy tolerance N, without/with holding brake
- IP65 degree of protection and paint finish

SP+ planetary gearboxes can therefore only be ordered with these motors:

1FK7 . . . - 2 A . . . - . . ■ 1 Compact
1FK7 . . . - 3 B . . . - . . ■ 1 High Inertia
1FK7 . . . - 4 C . . . - . . ■ 1 High Dynamic
G without brake
H with brake

or

1FK7 0 2 . - 5 A . . . - . . G 5
1FK7 0 2 . - 5 A . . . - . . H 5

When ordering a motor with gearbox, **-Z** must be added to the Article No.

Example:

1FK7042 motor without holding brake with 2-stage SP+ planetary gearbox with i = 28 and gear shaft without feather key
1FK7042-2AF74-1AG1-**Z**
J35

✔ Possible
– Not possible
[1] Referred to output shaft center at 100 rpm.

© Siemens 2022

Selection and ordering data

Motor	Planetary gearbox 2-stage			Available gear ratio i =					Motor speed, max. S3-60%	Output torque, max. S3-60%	Radial output shaft loading, max. [1]	Axial output shaft loading, max. [1]
Type	Type	Torsional backlash	Gearbox weight, approx.	16	20	28	40	50	n_{G1} (n_1)	M_{G2} (T_{2B})	F_r (F_{2Rmax})	F_a (F_{2Amax})
		arcmin	kg (lb)						rpm	Nm (lb_f-ft)	N (lb_f)	N (lb_f)
1FK7062	SP 180S-MF2	≤ 5	36.4 (80.3)	–	–	–	–	✔	5000	1462 (1078)	15400 (3462)	15570 (3500)
1FK7063				–	–	–	✔	✔				
1FK7064				–	–	–	✔	✔				
1FK7080				–	–	–	–	✔				
1FK7081				–	–	–	✔	✔				
1FK7083				–	–	✔	–	–				
1FK7084				–	✔	✔	–	–				
1FK7085				✔	✔	–	–	–				
1FK7086				✔	✔	–	–	–				
1FK7100				✔	✔	✔	–	–				
1FK7101				✔	✔	–	–	–				
1FK7103				✔	–	–	–	–				
1FK7083	SP 210S-MF2	≤ 6	55 (121)	–	–	–	✔	✔	4500	2880 (2124) (3000 (2213) for i = 20) (2840 (2095) for i = 40)	21000 (4721)	30000 (6744)
1FK7084				–	–	–	✔	✔				
1FK7085				–	–	✔	✔	–				
1FK7086				–	–	✔	–	–				
1FK7100				–	–	–	✔	✔				
1FK7101				–	–	✔	–	–				
1FK7103				–	✔	–	–	–				
1FK7105				✔	✔	–	–	–				
1FK7101	SP 240S-MF2	≤ 6	80.6 (178)	–	–	–	✔	✔	4500	(5400 (3983) for i = 28) (4400 (3245) for i = 40) (5160 (3806) for i = 50)	30000 (6744)	33000 (7419)
1FK7103				–	–	✔	✔	–				
1FK7105				–	–	✔	–	–				
	Gear shaft			Order code								
	With feather key			**J12**	**J13**	**J15**	**J16**	**J17**				
	Without feather key			**J32**	**J33**	**J35**	**J36**	**J37**				

Requirements:

SP+ planetary gearboxes can be mounted with the following motor versions:

- Plain motor shaft extension, shaft and flange accuracy tolerance N, without/with holding brake
- IP65 degree of protection and paint finish

SP+ planetary gearboxes can therefore only be ordered with these motors:

1FK7 . . . - 2 A . . . - . . ■ 1 Compact
1FK7 . . . - 3 B . . . - . . ■ 1 High Inertia
1FK7 . . . - 4 C . . . - . . ■ 1 High Dynamic
G without brake
H with brake

or

1FK7 0 2 . - 5 A . . . - . . G 5
1FK7 0 2 . - 5 A . . . - . . H 5

When ordering a motor with gearbox, **-Z** must be added to the Article No.

Example:

1FK7042 motor without holding brake
with 2-stage SP+ planetary gearbox
with i = 16 and gear shaft without feather key
1FK7103-2AC74-1AG1-**Z**
J32

✔ Possible
– Not possible
[1] Referred to output shaft center.

© Siemens 2022

Technical specifications

SIMOTICS S-1FK7 motor with SP+ planetary gearbox

Two-stage Type	Gear ratio	Motor speed	Output torque	Moments of inertia of gearboxes (referred to the drive)					
		Continuous duty S1 [1]		1FK702.	1FK703.	1FK704.	1FK706.	1FK708.	1FK710.
	i	n_{rated1}	M_{rated2} (T_{2rated})	J_1	J_1	J_1	J_1	J_1	J_1
		rpm	Nm (lb$_f$-ft)	kgcm^2 (lb$_f$-in^2)	kgcm^2 (lb$_f$-in^2)	kgcm^2 (lb$_f$-in^2)	kgcm^2 (lb$_f$-in^2)	kgcm^2 (lb$_f$-in^2)	kgcm^2 (lb$_f$-in^2)
SP 060S-MF2	16	4400	38 (28.0)	0.08 (0.03)	0.17 (0.06)	–	–	–	–
	20	4400	40 (29.5)	0.07 (0.02)	0.16 (0.05)	–	–	–	–
	28	4400	40 (29.5)	0.06 (0.02)	–	–	–	–	–
SP 075S-MF2	16	3500	101 (74.5)	–	0.23 (0.08)	0.55 (0.19)	–	–	–
	20	3500	101 (74.5)	–	0.20 (0.07)	0.53 (0.18)	–	–	–
	28	3500	101 (74.5)	–	0.18 (0.06)	0.50 (0.17)	–	–	–
	40	3500	101 (74.5)	0.09 (0.03)	0.16 (0.05)	–	–	–	–
	50	3800	106 (78.2)	0.09 (0.03)	0.16 (0.05)	–	–	–	–
SP 100S-MF2	16	3100	243 (179)	–	–	0.81 (0.28)	2.18 (0.74)	–	–
	20	3100	259 (191)	–	–	0.70 (0.24)	2.07 (0.71)	–	–
	28	3100	277 (204)	–	–	0.60 (0.21)	1.97 (0.67)	–	–
	40	3100	277 (204)	–	0.38 (0.13)	0.55 (0.19)	–	–	–
	50	3500	277 (204)	–	0.38 (0.13)	0.54 (0.18)	–	–	–
SP 140S-MF2	16	2900	461 (340)	–	–	–	3.19 (1.09)	10.3 (3.5)	–
	20	2900	493 (364)	–	–	–	2.71 (0.93)	9.77 (3.34)	–
	28	2900	545 (402)	–	–	–	2.34 (0.80)	9.41 (3.22)	–
	40	2900	581 (429)	–	–	–	2.10 (0.72)	9.16 (3.13)	–
	50	3200	536 (395)	–	–	1.39 (0.47)	2.08 (0.71)	–	–
SP 180S-MF2	16	2700	1162 (857)	–	–	–	–	12.4 (4.2)	13.5 (4.6)
	20	2700	1162 (857)	–	–	–	–	10.9 (3.7)	12.0 (4.1)
	28	2700	1162 (857)	–	–	–	–	9.48 (3.24)	10.6 (3.6)
	40	2700	1162 (857)	–	–	–	5.51 (1.88)	8.67 (2.96)	–
	50	2900	1162 (857)	–	–	–	5.45 (1.86)	8.61 (2.94)	–
SP 210S-MF2	16	2500	1274 (940)	–	–	–	–	–	34.5 (11.8)
	20	2500	1266 (934)	–	–	–	–	–	31.5 (10.8)
	28	2500	1294 (954)	–	–	–	–	30.0 (10.3)	30.0 (10.3)
	40	2500	1358 (1002)	–	–	–	–	28.5 (9.7)	28.5 (9.7)
	50	2500	1679 (1238)	–	–	–	–	28.3 (9.7)	28.3 (9.7)
SP 240S-MF2	28	2500	2667 (1967)	–	–	–	–	–	30.5 (10.4)
	40	2500	2803 (2067)	–	–	–	–	–	28.2 (9.6)
	50	2500	3457 (2550)	–	–	–	–	–	27.9 (9.5)

[1] The limit values in the table apply for S1 continuous duty (ON time > 60% or > 20 min) for a maximum gearbox temperature of 90 °C (194 °F).

© Siemens 2022

Overview

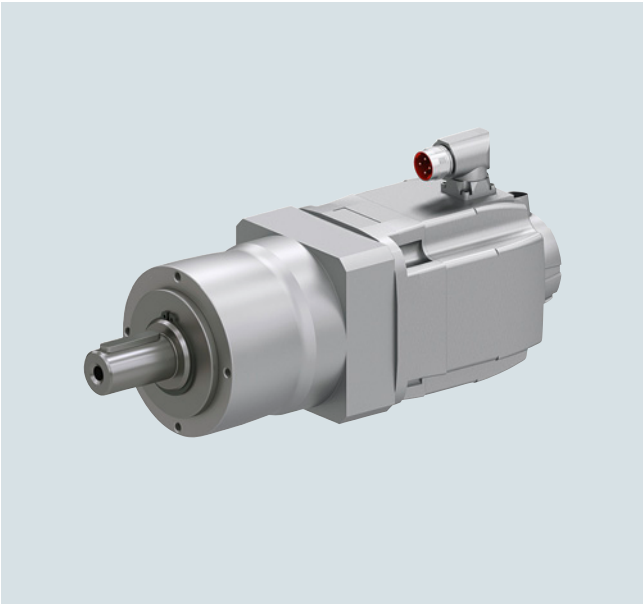

SIMOTICS S-1FK7 motor with mounted NP planetary gearbox

SIMOTICS S-1FK7 motors can easily be combined with planetary gearboxes to form compact coaxial drive units. The gearboxes are flanged directly to the drive end of the motors.

When selecting the gearbox, ensure that its maximum permissible input speed is not exceeded by the maximum speed of the motor. In the case of high operating frequencies, allowance must be made for the factor f_2 (see Configuration Manual, SIMOTICS S-1FK7 synchronous motors). The frictional losses of the gearbox must always be taken into account when engineering geared drives.

The gearboxes are only available in non-balanced design and with feather key.

Benefits

- High efficiency, single-stage: > 97%
- Minimum torsional backlash Single-stage: ≤ 10 arcmin
- Power transmission from the central sun wheel via planet wheels
- No shaft deflections in the planet wheel set due to symmetrical force distribution
- The gearboxes are connected to the motor shaft via an integrated clamping hub. A plain motor shaft extension is necessary for this purpose. Shaft and flange accuracy tolerance N in accordance with DIN 42955 and vibration magnitude grade A in accordance with EN 60034-14 are sufficient. The motor flange is adapted by means of adapter plates.
- Output shaft of gearbox coaxial with the motor
- The gearboxes are suitable for all mounted systems.
- The gearboxes are enclosed (seal between gearbox and motor) and filled with grease in the factory.
  They are lubricated and sealed for their service life.
- Degree of protection of gearbox: IP64
- Small dimensions
- Low weight

Integration

SIMOTICS S-1FK7 motors can be supplied ex works (Siemens AG) in the shaft heights 28 to 100, complete with flange-mounted planetary gearbox.

The gearboxes assigned to the individual motors and gear ratios *i* available for these motor/gearbox combinations are listed in the subsequent selection table. The maximum permissible input speed of the gearbox (this is the same as the maximum motor speed) must be taken into account when a gearbox is selected.

The motor/gearbox combinations listed in the selection table are mainly intended for cycle operation S3-60 % (ON time ≤ 60 % and ≤ 20 min). Reduced maximum motor speeds and output torques apply for use in S1 continuous duty (ON time > 60% or > 20 min). The gearbox temperature must not exceed 90 °C (194 °F).

Follow the instructions contained in the Configuration Manual for SIMOTICS S-1FK7 synchronous motors when assigning gearboxes to the motor.

© Siemens 2022

Selection and ordering data

Motor	**Planetary gearbox NP 1-stage** Torsional backlash ≤ 10 arcmin		**Available gear ratio *i* =**		Input speed, max. S3-60%	Output torque, max. S3-60%		Output shaft radial force, max. [1]	Gearbox moment of inertia	Gearbox moment of inertia
Type	Type	Gearbox weight, approx. kg (lb)	**5**	**10**	n_{G1} rpm	M_{G2} at $i = 5$ Nm (lb_f-ft)	M_{G2} at $i = 10$ Nm (lb_f-ft)	F_r N (lb_f)	J_G at $i = 5$ 10^{-4} kgm^2 (10^{-3} lb_f-in-s^2)	J_G at $i = 10$ 10^{-4} kgm^2 (10^{-3} lb_f-in-s^2)
1FK7022	NP 005	0.7 (1.5)	✔	–	10000	14 (10.3)	–	800 (180)	0.03 (0.03)	–
1FK7022	NP 015	1.9 (4.2)	–	✔	8000	40 (29.5)	35 (25.8)	1700 (382)	–	0.13 (0.12)
1FK7032			✔	✔					0.27 (0.24)	0.22 (0.19)
1FK7033			✔	✔						
1FK7034			✔	✔						
1FK7040	NP 025	3.8 (8.4)	✔	✔	7000	100 (73.8)	90 (66.4)	2800 (629)	0.61 (0.54)	0.49 (0.43)
1FK7042			✔	✔						
1FK7043			✔	✔						
1FK7044			✔	✔						
1FK7060	NP 035	9.4 (20.7)	✔	✔	6000	250 (184)	220 (162)	5000 (1124)	2.2 (1.9)	1.7 (1.5)
1FK7061			✔	✔						
1FK7062			✔	✔						
1FK7063			✔	✔						
1FK7064			✔	–						
1FK7080	NP 045	19 (41.9)	✔	✔	4000	500 (369)	400 (295)	8000 (1798)	8.8 (7.8)	7.2 (6.4)
1FK7081			✔	✔						
1FK7083			✔	✔						
1FK7084			✔	✔						
1FK7085			✔	✔						
1FK7086			✔	✔						
1FK7100			✔	✔						
1FK7101			✔	–						
1FK7103			✔	–						
1FK7105			✔	–						
	Gear shaft With feather key		Order code **V40**	**V42**						

Requirements:

NP planetary gearboxes can be mounted on the following motor versions:

- Plain motor shaft extension, shaft and flange accuracy tolerance N, without/with holding brake
- IP64 degree of protection and paint finish

NP planetary gearboxes can therefore only be ordered with these motors:

1FK7 . . . - 2 A . 7 . - 1 . ■ 0 Compact
1FK7 . . . - 3 B . 7 . - 1 . ■ 0 High Inertia
1FK7 . . . - 4 C . 7 . - 1 . ■ 0 High Dynamic
G without brake
H with brake

or

1FK7 0 2 . - 5 A . 7 . - 1 . G 3
1FK7 0 2 . - 5 A . 7 . - 1 . H 3

When ordering a motor with gearbox, **-Z** must be added to the Article No.

Example:

1FK7042 motor with holding brake
with single-stage NP planetary gearbox
with $i = 5$ and gear shaft with feather key
1FK7042-3BK74-1AH0-**Z**
V40

Continuous duty

Continuous duty is permissible at rated speed and rated torque. The gearbox temperature must not exceed 90 °C (194 °F).

Planetary gearbox NP 1-stage Torsional backlash ≤ 10 arcmin	Rated input speed	Rated output torque	
Type	n_{G1} rpm	M_{G2} at $i = 5$ **Nm** (lb_f-ft)	M_{G2} at $i = 10$ **Nm** (lb_f-ft)
NP 005	4000	6.5 (4.8)	–
NP 015	3700	21 (15.5)	19 (14.0)
NP 025	3400	50 (36.9)	45 (33.2)
NP 035	2600	125 (92.2)	110 (81.1)
NP 045	2000	350 (258)	200 (148)

✔ Possible
– Not possible
[1] Referred to output shaft center at 100 rpm.

© Siemens 2022

Overview

SIMOTICS S-1FK7 DYA G2

The SIMOTICS S-1FK7 DYA G2 compact geared motor combines electrical and mechanical components in the smallest space possible. This mechatronic unit consists of a permanent-magnet SIMOTICS S-1FK7 synchronous motor and a directly mounted single-stage planetary gearbox.

The SIMOTICS S-1FK7 DYA G2 compact geared motors with IP64 degree of protection are designed for operation without external cooling and the heat is therefore dissipated over the motor surface. The integrated planetary gearboxes have high maximum torques and permit high radial and axial forces at the shaft extension.

Benefits

- Space-saving installation due to the high power density of the motor and integration of the planetary gearbox directly into the motor end shield. Mounting to the machine is greatly simplified by this and the logistics are reduced to a minimum
- Mounting in construction types IM B5 and IM B14 is possible
- Highly dynamic due to lower motor moment of inertia; this means shorter cycle times
- Maintenance-free
- Suitable for S1 continuous duty
- High positioning accuracy thanks to low mechanical torsional backlash of < 8 arcmin
- Mechanical compatibility with regard to IM B14 flange and shaft extension for the NP planetary gearbox
- Power and signals are connected via a connector

Application

In general mechanical engineering, any place where coaxial drive units are used, e.g. in

- Packaging machines
- Wood, glass and ceramic processing machines
- Plastic, injection molding and foil stretching machines
- Handling systems
- Machine tools
- All types of auxiliary axes

Integration

SIMOTICS S-1FK7 DYA G2 compact geared motors can be combined with the SINAMICS S120 drive system to create a powerful system with high functionality. The integrated encoder system for speed and position control can be selected depending on the application.

© Siemens 2022

Technical specifications

Product name	SIMOTICS S-1FK7-DYA G2 compact geared motor
Motor type	Permanent-magnet synchronous motor
Magnet material	Rare-earth magnetic material
Cooling	Natural cooling
Temperature monitoring	Pt1000 temperature sensor in the stator winding
Stator winding insulation in accordance with EN 60034-1 (IEC 60034-1)	Temperature class 155 (F) for a winding temperature rise of ΔT = 100 K at an ambient temperature of 40 °C (104 °F).
Type of construction in accordance with EN 60034-7 (IEC 60034-7)	IM B5 (IM V1, IM V3) IM B14
Degree of protection in accordance with EN 60034-5 (IEC 60034-5)	IP64
Shaft extension at DE in accordance with DIN 748-3 (IEC 60072-1)	With feather key
Shaft and flange accuracy in accordance with DIN 42955 (IEC 60072-1) [1]	Tolerance N
Vibration severity in accordance with EN 60034-14 (IEC 60034-14)	Grade A is maintained up to rated speed
Sound pressure level L_{pA} (1 m) according to EN ISO 1680, max.	
• 1FK703 • 1FK704 • 1FK706	72 dB 75 dB 80 dB
Built-in encoder systems	• AS24DQI: Absolute encoder, single-turn, 24 bit, DRIVE-CLiQ • AM24DQI: Absolute encoder, multi-turn, 24 bit, DRIVE-CLiQ • AS20DQI: Absolute encoder, single-turn, 24 bit, DRIVE-CLiQ • AM20DQI: Absolute encoder, multi-turn, 24 bit, DRIVE-CLiQ • R14DQ: Resolver with DRIVE-CLiQ interface 14 bit • R15DQ: Resolver with DRIVE-CLiQ interface 15 bit
Connection	Connectors for signals and power can be rotated through 270°
Paint finish	Anthracite RAL 7016
Certificate of suitability	cURus
Options	Built-in holding brake

[1] Concentricity of the shaft end, coaxiality of spigot and shaft, and axial runout of the mounting flanges to the axis of the shaft end.

© Siemens 2022

Selection and ordering data

Rated speed	Rated power	Maximum output speed (short-time)	Torque, max.	Rated torque	Gear ratio	**SIMOTICS S-1FK7 DYA G2 compact geared motors** **Standard type**		No. of pole pairs	Moment of inertia without brake	with brake
n_{2rated}	P_2	n_{2max}	M_{2dyn} [2]		i				J	J
rpm	kW (hp)	rpm	Nm (lb_f-ft)	Nm (lb_f-ft)		Article No.	Order code		10^{-4} kgm^2 (10^{-3} lb_f-in-s^2)	10^{-4} kgm^2 (10^{-3} lb_f-in-s^2)
Natural cooling										
370	0.37 (0.50)	800	43.6 (32.2)	9.5 (7.0)	10	**1FK7032-2AK71-1■■0-Z**	**A03**	3	0.66 (0.58)	0.76 (0.67)
340	0.45 (0.60)	700	49.4 (36.4)	12.5 (9.2)	10	**1FK7040-2AK71-1■■0-Z**	**A13**	4	1.65 (1.46)	1.97 (1.74)
260	1.25 (1.68)	600	174.6 (129)	46 (33.9)	10	**1FK7060-2AH71-1■■0-Z**	**A73**	4	7.9 (6.99)	8.9 (7.88)

Encoder systems:	AS24DQI encoder AM24DQI encoder AS20DQI encoder AM20DQI encoder R15DQ resolver [1] R14DQ resolver [1]		**B** **C** **Q** **R** **U** **P**
Shaft extension: Feather key and keyway Feather key and keyway	**Shaft and flange accuracy:** Tolerance N Tolerance N	**Holding brake:** Without With	**U** **V**
Degree of protection:	IP64, paint finish anthracite, color RAL 7016		**0**

6

For footnotes, see next page.

© Siemens 2022

Motor type (repeated)	Weight without brake	with brake	Stall current	Maximum current	**SINAMICS S120 Motor Module** Rated output current [3]	**Booksize format** Internal air cooling For further components, see SINAMICS S120 drive system	**Power cable with complete shield** Motor connection (and brake connection) via power connector: Power connector	Cable cross-section [4]	Pre-assembled cable
	m	*m*	I_0 at M_0 ΔT=100 K	I_{max}	I_{rated}				
	kg (lb)	kg (lb)	A	A	A	Article No.	Size	mm²	Article No.
					Line voltage 380 ... 480 V 3 AC				
1FK7032-2AK71-...	4.2 (9.3)	4.5 (9.9)	1.7	5	3	**6SL3120-■ TE13-0AD0**	1	4 × 1.5	**6FX■ 002-5■ N06-....**
1FK7040-2AK71-...	6.2 (13.7)	6.8 (15.0)	2.35	7.4	3	**6SL3120-■ TE13-0AD0**	1	4 × 1.5	**6FX■ 002-5■ N06-....**
1FK7060-2AH71-...	13.8 (30.4)	14.5 (32.0)	6.3	19	9	**6SL3120-■ TE21-0AD0**	1	4 × 1.5	**6FX■ 002-5■ N06-....**

Motor Module:	
Single Motor Module	**1**
Double Motor Module	**2**

Power cable:		
MOTION-CONNECT 800PLUS	**8**	
MOTION-CONNECT 500	**5**	
Without brake cores		**C**
With brake cores [5]		**D**
Length code		**....**

For information on the cables, refer to MOTION-CONNECT connection systems

6

[1] Can only be selected for 1FK7032-2AK71-1..0-Z A03

[2] M_{2dyn} = Maximum permissible output torque of the geared motor that may be output for a short period of time

[3] With default setting of the pulse frequency.

[4] The current carrying capacity of the power cables complies with EN 60204-1 for installation type C, for continuous duty at an ambient air temperature of 40 °C (104 °F).

[5] Cable cross-section for brake connection 2 × 1.5 mm².

© Siemens 2022

Overview

SIMOTICS L-1FN3 linear motor, primary section

In combination with the SINAMICS S120 drive system, SIMOTICS L-1FN3 linear motors provide an optimally tuned linear direct drive system for the requirements of modern mechanical engineering.

The motors comprise a primary section and a secondary section track with magnets made of rare-earth material. The primary section has fixed dimensions, while the secondary section is made up of individual elements (secondary sections) to suit the required traversing range. Through parallel operation of the motors, feedrate force and length can be scaled beyond the available spectrum.

Benefits

- Outstanding dynamic response and very high traversing velocity
- Excellent precision
- Simple installation
- Drive components are free of wear thanks to contactless drive force transmission

The main advantage of linear direct drive technology is the extensive avoidance of the effects of elasticity, play, and friction, as well as natural oscillation in the drive train. This results in a higher dynamic response and increased precision. If suitable measuring systems are used and the temperature conditions are appropriate, the motors can be positioned in the nanometer range.

Application

Version for peak load

Used in machine axes that are temporarily accelerated, e.g. S3 duty, or when large forces are required for a short time.

Typical applications:

- Highly dynamic, flexible machine tool and production machine construction
- Laser machining
- Handling

Version for continuous load

Used in machine axes with constant acceleration changes, e.g. S1 duty, with high process/weight forces or for operation without water cooling.

Typical applications:

- Grinding
- Non-circular machining (e.g. oscillating applications)
- Z axes without weight compensation, quills
- Handling, Cartesian robots

Design

The simple mechanical construction without transmission elements, such as ballscrew, coupler, or belt, enhances the reliability of the drive components.

Heat loss occurs almost exclusively in the primary section and is dissipated via an integrated liquid cooling system. The Thermo-Sandwich dual-circuit cooling system allows the motor to be decoupled from the machine, and is also an inexpensive cooling design.

The stainless metal encapsulation of the primary section ensures the high mechanical ruggedness and resistance to soiling required for use in machine tools and production machines, as well as high resistance to corrosive liquids. In addition, the motor places minimal demands on the preparation of mounting surfaces thanks to the large air gap. The mounting tolerances for the air gap are ± 0.3 mm.

Design variants

SIMOTICS L-1FN3 linear motors are available as single-sided or double-sided motors.

- Single-sided motors
  The single-sided version consists of a primary section that is mounted parallel to the associated secondary section.
- Double-sided motors
  The special secondary section of the double-sided version lies between two primary sections (one primary section with standard winding and one with complementary winding). The design as a double-sided motor is particularly suitable for applications with movable secondary section and small traversing paths with fast acceleration (e.g. non-circular machining).

© Siemens 2022

Technical specifications

Product name	SIMOTICS L-1FN3 linear motor
Motor type	Permanent-magnet linear motor
Magnet material	Rare-earth permanent magnets
Overload ratio (F_{max}:F_{rated}) up to max. • Version for peak load • Version for continuous load	 2.75 1.7
Cooling	Water cooling
Water cooler connections	G 1/8" internal thread on all primary and secondary section coolers
Temperature influence on surrounding construction with precision cooling, max.	+4 K
Coolant inlet temperature, permissible	35 °C (95 °F) (avoid condensation) > 35 °C (95 °F) if rated motor power is reduced
Temperature monitoring integrated in the primary section winding[1]	2 monitoring circuits: Temp-S with PTC thermistor and Temp-F with Pt1000 temperature sensor
Insulation according to EN 60034-1 (IEC 60034-1)	Temperature class 155 (F) for a winding temperature of 120 °C (248 °F)
Degree of protection according to EN 60034-5 (IEC 60034-5)	IP65
Available configurations	Different graduations due to modular construction
Secondary section cover	Exchangeable through the entire track or segment by segment
2nd rating plate	Enclosed separately
Encoder system[2] (not included in scope of delivery)	Select according to basic conditions specific to the application and the drive.
Connection	
• 1FN3050	Permanently connected signal and power cable pre-assembled with connectors or with exposed core ends
• 1FN3100 ... 1FN3900	Connection cover prepared for separate power and signal cable
• 1FN3100 ... 1FN3900	Connection cover prepared for a heavy-gauge threaded joint Version for peak load
Certificate of suitability	cURus UR for 1FN3900-4WC00-...

Characteristic curves

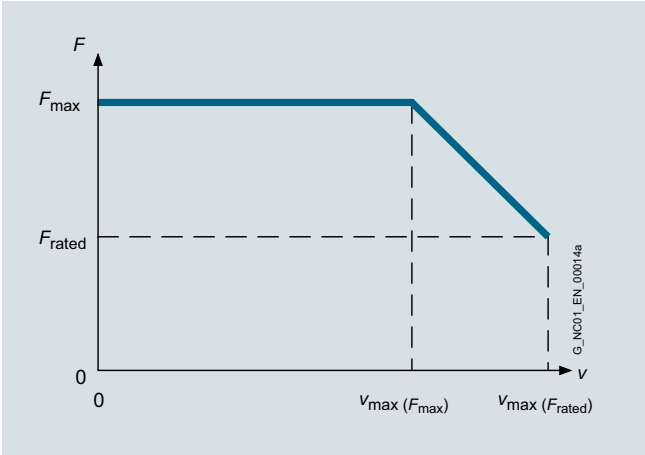

Velocity/force characteristic curve

The SIMOTICS L-1FN3 linear motors have an overload range available for acceleration processes. The maximum force F_{max} can only be utilized up to a maximum velocity $v_{max(Fmax)}$; up to velocity $v_{max(Frated)}$ only the feedrate force F_{rated} is available.

[1] Evaluation via SME120/SME125 Sensor Module External or TM120 Terminal Module, see SINAMICS S120 drive system.

[2] See recommended linear measuring systems.

© Siemens 2022

Selection and ordering data

Feedrate force		Maximum velocity [3]		SIMOTICS L-1FN3 linear motors Version for peak load			Weight, approx.	
				Primary section	**Secondary section** Standard – matching motor of the relevant component size	**Secondary section** Standard extended – matching motor of the relevant component size	Primary section without/with precision cooling	Secondary section without/with heatsink profiles
F_{rated} [1) 2)]	F_{max}	v_{max} at F_{max}	v_{max} at F_{rated}					
N (lb$_f$)	N (lb$_f$)	m/min (ft/min)	m/min (ft/min)	Article No.	Article No.	Article No.	kg (lb)	kg (lb)
Water cooling								
200 (45.0)	550 (124)	170 (558)	408 (1339)	**1FN3050-2WC00-0 E A3**	**1FN3050-4SA00-0AA0**		3.0/3.5 (6.6/7.7)	0.4/0.5 (0.9/1.1)
				1FN3050-2WC00-0 F A3				
200 (45.0)	490 (110)	147 (482)	335 (1099)	**1FN3100-1WC00-0 ■ A3**	**1FN3100-4SA00-0AA0**		2.0/– (4.4/–) [4]	0.7/0.8 (1.5/1.8)
450 (101)	1100 (247)	148 (486)	323 (1060)	**1FN3100-2WC00-0 ■ A3**			4.0/4.6 (8.8/10.1)	
		258 (846)	535 (1755)	**1FN3100-2WE00-0 ■ A3**				
675 (152)	1650 (371)	137 (449)	303 (994)	**1FN3100-3WC00-0 ■ A3**			5.6/6.4 (12.3/14.1)	
		258 (846)	534 (1752)	**1FN3100-3WE00-0 ■ A3**				
900 (202)	2200 (495)	148 (486)	324 (1063)	**1FN3100-4WC00-0 ■ A3**			7.4/8.5 (16.3/18.7)	
		258 (846)	535 (1755)	**1FN3100-4WE00-0 ■ A3**				
1120 (252)	2750 (618)	125 (410)	278 (912)	**1FN3100-5WC00-0 ■ A3**			9.1/10.4 (20.1/22.9)	
340 (76.4)	820 (184)	140 (459)	303 (994)	**1FN3150-1WC00-0 ■ A3**	**1FN3150-4SA00-0AA0**		2.9/– (6.4/–) [4]	1.2/1.3 (2.7/2.9)
		278 (912)	569 (1867)	**1FN3150-1WE00-0 A A3**			3.0/– (6.61/–) [4]	
675 (152)	1650 (371)	141 (463)	306 (1004)	**1FN3150-2WC00-0 ■ A3**			5.3/6.0 (11.7/13.2)	
1010 (227)	2470 (555)	138 (453)	302 (991)	**1FN3150-3WC00-0 ■ A3**			7.7/8.6 (17.0/19.0)	
1350 (303)	3300 (742)	141 (463)	306 (1004)	**1FN3150-4WC00-0 ■ A3**			10.4/11.6 (22.9/25.6)	
1690 (380)	4120 (926)	141 (463)	306 (1004)	**1FN3150-5WC00-0 ■ A3**			12.5/13.9 (27.6/30.6)	
610 (137)	1720 (387)	138 (453)	325 (1066)	**1FN3300-1WC00-0 ■ A3**	**1FN3300-4SA00-0AA0**	**1FN3300-4SA12-0AA0**	6.6/– (14.6/–) [4]	2.4/2.6 (5.3/5.7)
1220 (274)	3450 (776)	77 (253)	194 (637)	**1FN3300-2WB00-0 ■ A3**			11.5/12.5 (25.4/27.6)	
1230 (277)	3450 (776)	140 (459)	322 (1056)	**1FN3300-2WC00-0 ■ A3**				
		399 (1309)	868 (2848)	**1FN3300-2WG00-0 ■ A3**				
1840 (414)	5170 (1162)	142 (466)	327 (1073)	**1FN3300-3WC00-0 ■ A3**			17.0/18.4 (37.5/40.6)	
		405 (1329)	881 (2891)	**1FN3300-3WG00-0 ■ A3**				
2450 (551)	6900 (1551)	77 (253)	194 (637)	**1FN3300-4WB00-0 ■ A3**			22.2/24 (49.0/52.9)	
		140 (459)	323 (1060)	**1FN3300-4WC00-0 ■ A3**				

Type of connection:	
1FN3100 to 1FN3900 motors	
Combined power/signal connection cable Connection cover prepared for a heavy-gauge threaded joint	**A**
Separate power and signal connections Connection cover prepared for metric screw fastening	**B**
1FN3050 motors	
Separate power and signal connections, permanently connected with exposed core ends Length: 2 m (6.56 ft)	**E**
Separate power and signal connections, permanently connected, pre-assembled with connectors Length: 0.5 m (1.64 ft)	**F**

Description	Article No.
Signal cable, pre-assembled with M17 connector	
For SIMOTICS L-1FN3 linear motors	
• 1FN3100/1FN3150	**6FX8002-2SL01-....**
• 1FN3300 ... 1FN3900	**6FX8002-2SL02-....**

For information on the cables, refer to MOTION-CONNECT connection systems

For footnotes, see next page.

© Siemens 2022

Motor type Primary section (repeated)	Rated current	Maximum current	Calculated power	**SINAMICS S120 Motor Module** [5] **Booksize format** Internal air cooling		**Power cable with complete shield** Motor connection via adapter cable with power connector for increased velocity/acceleration			
				Required rated current	For further components, see SINAMICS S120 drive system				
	I_{rated} [1]	I_{max}	$P_{el, max.}$	I_{rated} / I_{max}		Pre-assembled adapter cable for motor [6]	Power connector	Cable cross-section [7]	Pre-assembled basic cable to drive system
	A	A	kW (hp)	A	Article No.	Article No.	Size	mm²	Article No.
1FN3050-2WC00-...	2.7	8.2	4.0 (5.4)	3/9	**6SL3120-■TE13-0AD0**	Permanent cable connection	1	4 × 2.5	**6FX8002-5CS16-....**
1FN3050-2WC00-...	2.7	8.2	4.0 (5.4)	3/9	**6SL3120-■TE13-0AD0**	Permanent cable connection	1	4 × 2.5	**6FX8002-5CS16-....**
1FN3100-1WC00-...	2.4	6.5	3.1 (4.2)	3/9	**6SL3120-■TE13-0AD0**	**6FX7002-5LM42-....**	1	4 × 2.5	**6FX8002-5CS16-....**
1FN3100-2WC00-...	5.1	13.5	6.3 (8.4)	5/15	**6SL3120-■TE15-0AD0**	**6FX7002-5LM42-....**	1	4 × 2.5	**6FX8002-5CS16-....**
1FN3100-2WE00-...	8.0	21.4	8.3 (11.1)	9/27	**6SL3120-■TE21-0AD0**	**6FX7002-5LM42-....**	1	4 × 2.5	**6FX8002-5CS16-....**
1FN3100-3WC00-...	7.2	19.1	9.1 (12.2)	9/27	**6SL3120-■TE21-0AD0**	**6FX7002-5LM42-....**	1	4 × 2.5	**6FX8002-5CS16-....**
1FN3100-3WE00-...	12.1	32.1	12.4 (16.6)	18/36	**6SL3120-■TE21-8AC0**	**6FX7002-5LM42-....**	1	4 × 2.5	**6FX8002-5CS16-....**
1FN3100-4WC00-...	10.2	27.1	12.5 (16.8)	18/36	**6SL3120-■TE21-8AC0**	**6FX7002-5LM42-....**	1	4 × 2.5	**6FX8002-5CS16-....**
1FN3100-4WE00-...	16.1	42.9	16.6 (22.3)	18/54	**6SL3120-1TE21-8AD0**	**6FX7002-5LM42-....**	1	4 × 2.5	**6FX8002-5CS16-....**
1FN3100-5WC00-...	11.0	29.5	14.3 (19.2)	18/36	**6SL3120-■TE21-8AC0**	**6FX7002-5LM42-....**	1	4 × 2.5	**6FX8002-5CS16-....**
1FN3150-1WC00-...	3.6	9.5	4.3 (5.8)	5/15	**6SL3120-■TE15-0AD0**	**6FX7002-5LM42-....**	1	4 × 2.5	**6FX8002-5CS16-....**
1FN3150-1WE00-...	6.4	17.1	6.2 (8.3)	9/27	**6SL3120-■TE21-0AD0**	**6FX7002-5LM42-....**	1	4 × 2.5	**6FX8002-5CS16 ....**
1FN3150-2WC00-...	7.2	19.1	8.7 (11.7)	9/27	**6SL3120-■TE21-0AD0**	**6FX7002-5LM42-....**	1	4 × 2.5	**6FX8002-5CS16-....**
1FN3150-3WC00-...	10.7	28.6	12.8 (17.2)	18/36	**6SL3120-■TE21-8AC0**	**6FX7002-5LM42-....**	1	4 × 2.5	**6FX8002-5CS16-....**
1FN3150-4WC00-...	14.3	38.2	17.3 (23.2)	18/54	**6SL3120-1TE21-8AD0**	**6FX7002-5LM42-....**	1	4 × 2.5	**6FX8002-5CS16-....**
1FN3150-5WC00-...	17.9	47.7	21.6 (29.0)	18/54	**6SL3120-1TE21-8AD0**	**6FX7002-5LM42-....**	1	4 × 2.5	**6FX8002-5CS16-....**
1FN3300-1WC00-...	6.5	20.0	8.3 (11.1)	9/27	**6SL3120-■TE21-0AD0**	**6FX7002-5LM62-....**	1	4 × 2.5	**6FX8002-5CS16-....**
1FN3300-2WB00-...	8.0	24.7	12.6 (16.9)	9/27	**6SL3120-■TE21-0AD0**	**6FX7002-5LM62-....**	1	4 × 2.5	**6FX8002-5CS16-....**
1FN3300-2WC00-...	12.6	39.0	16.2 (21.7)	18/54	**6SL3120-1TE21-8AD0**	**6FX7002-5LM62-....**	1	4 × 2.5	**6FX8002-5CS16-....**
1FN3300-2WG00-...	32.4	100.0	30.8 (41.3)	60/120	**6SL3120-1TE26-0AC0**	**6FX7002-5LM82-....**	1.5	4 × 6	**6FX8002-5CS54-....**
1FN3300-3WC00-...	19.2	59.5	24.9 (33.4)	24/72	**6SL3120-1TE22-4AD0**	**6FX7002-5LM62-....**	1	4 × 2.5	**6FX8002-5CS16-....**
1FN3300-3WG00-...	49.4	153.0	47.0 (63.0)	132/210	**6SL3120-1TE31-3AA3**	**6FX7002-5LM32-....**	1.5	4 × 10	**6FX8002-5CS46-....**
1FN3300-4WB00-...	16.0	49.4	25.2 (33.8)	18/54	**6SL3120-1TE21-8AD0**	**6FX7002-5LM62-....**	1	4 × 2.5	**6FX8002-5CS16-....**
1FN3300-4WC00-...	25.3	78.3	32.6 (43.7)	30/90	**6SL3120-1TE23-0AD0**	**6FX7002-5LM72-....**	1.5	4 × 4	**6FX8002-5CS46-....**

Motor Module:	
Single Motor Module	**1**
Double Motor Module	**2**

....	Length code	**....**

For information on the cables, refer to MOTION-CONNECT connection systems

[1] For water cooling with inlet temperature 35 °C (95 °F).
[2] A reduction of up to 30% must be expected in case of motor standstill, at very low velocities, or with very short traverse paths.
[3] Velocity values refer to a DC link voltage of the drive system of 600 V DC.
[4] No precision cooler available.
[5] Optimized selection for full performance of linear motors.
[6] Pre-assembled adapter cable for motor with connection type B/E/F.
[7] The current carrying capacity of the power cables complies with EN 60204-1 for installation type C, for continuous duty at an ambient air temperature of 40 °C (104 °F).

© Siemens 2022

Selection and ordering data

Feedrate force		Maximum velocity 3)		SIMOTICS L-1FN3 linear motors Version for peak load			Weight, approx.	
				Primary section	**Secondary section** Standard – matching motor of the relevant component size	**Secondary section** Standard extended – matching motor of the relevant component size	Primary section without/with precision cooling	Secondary section without/with heatsink profiles
F_{rated} 1) 2)	F_{max}	v_{max} at F_{max}	v_{max} at F_{rated}					
N (lb$_f$)	N (lb$_f$)	m/min (ft/min)	m/min (ft/min)	Article No.	Article No.	Article No.	kg (lb)	kg (lb)
Water cooling								
1920 (432)	5180 (1165)	264 (866)	569 (1867)	**1FN3450-2WE00-0 ■ A3**	**1FN3450-4SA00-0AA0**	**1FN3450-4SA12-0AA0**	16.5/17.7 (36.4/39.0)	3.8/4 (8.4/8.82)
1930 (434)		41 (135)	112 (367)	**1FN3450-2WA50-0 ■ A3**				
		103 (338)	235 (771)	**1FN3450-2WB70-0 ■ A3**				
		135 (443)	275 (902)	**1FN3450-2WC00-0 ■ A3**				
		177 (581)	385 (1263)	**1FN3450-2WD00-0 ■ A3**				
2900 (652)	7760 (1745)	41 (135)	121 (397)	**1FN3450-3WA50-0 ■ A3**			24.0/25.7 (52.9/56.7)	3.8/4 (8.4/8.82)
		72.7 (238.5)	179 (587)	**1FN3450-3WB00-0 ■ A3**				
		102 (335)	236 (774)	**1FN3450-3WB50-0 ■ A3**				
		133 (436)	298 (978)	**1FN3450-3WC00-0 ■ A3**				
		260 (853)	561 (1841)	**1FN3450-3WE00-0 ■ A3**				
3860 (868)	10300 (2316)	72.9 (239.2)	179 (587)	**1FN3450-4WB00-0 ■ A3**			31.7/33.9 (69.9/74.7)	
		102 (335)	236 (774)	**1FN3450-4WB50-0 ■ A3**				
		133 (436)	298 (978)	**1FN3450-4WC00-0 ■ A3**				
		261 (856)	560 (1837)	**1FN3450-4WE00-0 ■ A3**				
2610 (587)	6900 (1551)	45.4 (149.0)	128 (420)	**1FN3600-2WA50-0 ■ A3**	**1FN3600-4SA00-0AA0**		22.5/23.9 (49.6/52.7)	4.6/5 (10.1/11.0)
		69.6 (228.4)	172 (564)	**1FN3600-2WB00-0 A A3**				
3920 (881)	10300 (2316)	69.4 (227.7)	171 (561)	**1FN3600-3WB00-0 ■ A3**			33.5/35.4 (73.9/78.1)	
		128 (420)	282 (925)	**1FN3600-3WC00-0 ■ A3**				
5220 (1174)	13800 (3102)	35.5 (116.5)	112 (367)	**1FN3600-4WA30-0 ■ A3**			43.0/45.5 (94.8/100.3)	
		68.1 (223.4)	170 (558)	**1FN3600-4WB00-0 ■ A3**				
		102 (335)	234 (768)	**1FN3600-4WB50-0 ■ A3**				
		125 (410)	279 (915)	**1FN3600-4WC00-0 ■ A3**				
4050 (910)	10300 (2316)	78 (256)	179 (587)	**1FN3900-2WB00-0 ■ A3**	**1FN3900-4SA00-0AA0**		32.2/33.7 (71.0/74.3)	7.5/7.9 (16.5/17.4)
		123 (404)	269 (883)	**1FN3900-2WC00-0 ■ A3**				
6080 (1367)	15500 (3485)	78.7 (258.2)	188 (617)	**1FN3900-3WB00-0 ■ A3**			47.0/47.8 (103.6/105.4)	
8100 (1821)	20700 (4654)	77.2 (253.3)	178 (584)	**1FN3900-4WB00-0 ■ A3**			62.7/65.4 (138.3/144.2)	
		98.6 (323.5)	222 (728)	**1FN3900-4WB50-0 ■ A3**				
		122 (400)	266 (873)	**1FN3900-4WC00-0 ■ A3**				

Type of connection:	
1FN3100 to 1FN3900 motors	
Combined power/signal connection cable Connection cover prepared for a heavy-gauge threaded joint	**A**
Separate power and signal connections Connection cover prepared for metric screw fastening	**B**

Description	Article No.
Signal cable, pre-assembled with M17 connector	
For SIMOTICS L-1FN3 linear motors	
• 1FN3100/1FN3150	**6FX8002-2SL01-....**
• 1FN3300 ... 1FN3900	**6FX8002-2SL02-....**

For information on the cables, refer to MOTION-CONNECT connection systems

For footnotes, see next page.

© Siemens 2022

Motor type Primary section (repeated)	Rated current	Maximum current	Calculated power	**SINAMICS S120 Motor Module** [4] **Booksize format** Internal air cooling		**Power cable with complete shield** Motor connection via adapter cable with power connector for increased velocity/acceleration			
				Required rated current	For further components, see SINAMICS S120 drive system				
	I_{rated} [1]	I_{max}	$P_{el, max.}$	I_{rated}/I_{max}		Pre-assembled adapter cable for motor [8]	Power connector	Cable cross-section [5]	Pre-assembled basic cable to drive system
	A	A	kW (hp)	A	Article No.	Article No.	Size	mm²	Article No.
1FN3450-2WE00-...	36.3	102.0	33.8 (45.3)	60/120	**6SL3120-1TE26-0AC0**	**6FX7002-5LM32-....**	1.5	4 × 10	**6FX8002-5CS64-....**
1FN3450-2WA50-...	8.9	25.0	15.1 (20.2)	9/27	**6SL3120-■TE21-0AD0**	**6FX7002-5LM62-....**	1	4 × 2.5	**6FX8002-5CS16-....**
1FN3450-2WB70-...	16.2	45.4	20.6 (27.6)	18/54	**6SL3120-■TE21-8AD0**	**6FX7002-5LM42-....**	1	4 × 2.5	**6FX8002-5CS16 ....**
1FN3450-2WC00-...	20.0	56.2	23.3 (31.2)	24/72	**6SL3120-1TE22-4AD0**	**6FX7002-5LM62-....**	1	4 × 2.5	**6FX8002-5CS16-....**
1FN3450-2WD00-...	25.0	70.2	25.8 (34.6)	24/72	**6SL3120-1TE22-4AD0**	**6FX7002-5LM72-....**	1.5	4 × 4	**6FX8002-5CS46 ....**
1FN3450-3WA50-...	12.9	38.0	22.6 (30.3)	18/54	**6SL3120-■TE21-8AD0**	**6FX7002-5LM42-....**	1	4 × 2.5	**6FX8002-5CS16 ....**
1FN3450-3WB00-...	17.9	52.7	26.7 (35.8)	18/54	**6SL3120-1TE21-8AD0**	**6FX7002-5LM62-....**	1	4 × 2.5	**6FX8002-5CS16-....**
1FN3450-3WB50-...	22.9	67.4	30.4 (40.8)	24/72	**6SL3120-1TE22-4AD0**	**6FX7002-5LM72-....**	1.5	4 × 4	**6FX8002-5CS46-....**
1FN3450-3WC00-...	28.3	83.5	34.3 (46.0)	30/90	**6SL3120-1TE23-0AD0**	**6FX7002-5LM82-....**	1.5	4 × 6	**6FX8002-5CS56-....**
1FN3450-3WE00-...	51.3	151.0	49.8 (66.8)	132/210	**6SL3120-1TE31-3AA3**	**6FX7002-5LM02-....**	1.5	4 × 16	**6FX8002-5CS24-....**
1FN3450-4WB00-...	23.8	70.1	35.5 (47.6)	24/72	**6SL3120-1TE22-4AD0**	**6FX7002-5LM72-....**	1.5	4 × 4	**6FX8002-5CS46-....**
1FN3450-4WB50-...	30.3	89.5	40.4 (54.2)	30/90	**6SL3120-1TE23-0AD0**	**6FX7002-5LM82-....**	1.5	4 × 6	**6FX8002-5CS56-....**
1FN3450-4WC00-...	37.6	111.0	45.6 (61.1)	60/120	**6SL3120-1TE26-0AC0**	**6FX7002-5LM32-....**	1.5	4 × 10	**6FX8002-5CS64-....**
1FN3450-4WE00-...	68.0	201.0	66.3 (88.9)	132/210	**6SL3120-1TE31-3AA3**	**6FX7008-1BB61-....** [6]	–	4 × 25	**6FX7008-1BB25-....** [7]
1FN3600-2WA50-...	13.2	35.9	21.4 (28.7)	18/36	**6SL3120-■TE21-8AC0**	**6FX7002-5LM62-....**	1	4 × 2.5	**6FX8002-5CS16-....**
1FN3600-2WB00-...	16.8	45.8	24.1 (32.3)	18/54	**6SL3120-■TE21-8AD0**	**6FX7002-5LM42-....**	1	4 × 2.5	**6FX8002-5CS16 ....**
1FN3600-3WB00-...	24.8	68.2	35.8 (48.0)	24/72	**6SL3120-1TE22-4AD0**	**6FX7002-5LM72-....**	1.5	4 × 4	**6FX8002-5CS46-....**
1FN3600-3WC00-...	38.4	106.0	43.4 (58.2)	60/120	**6SL3120-1TE26-0AC0**	**6FX7002-5LM32-....**	1.5	4 × 10	**6FX8002-5CS64-....**
1FN3600-4WA30-...	22.3	63.7	39.7 (53.2)	24/72	**6SL3120-1TE22-4AD0**	**6FX7002-5LM72-....**	1.5	4 × 4	**6FX8002-5CS46-....**
1FN3600-4WB00-...	31.5	90.1	46.8 (62.8)	30/90	**6SL3120-1TE23-0AD0**	**6FX7002-5LM82-....**	1.5	4 × 6	**6FX8002-5CS56-....**
1FN3600-4WB50-...	41.8	120.0	53.4 (71.6)	85/141	**6SL3120-1TE28-5AA3**	**6FX7002-5LM32-....**	1.5	4 × 10	**6FX8002-5CG61-....**
1FN3600-4WC00-...	48.8	139.0	56.8 (76.2)	85/141	**6SL3120-1TE28-5AA3**	**6FX7002-5LM32-....**	1.5	4 × 10	**6FX8002-5CG61-....**
1FN3900-2WB00-...	25.5	70.5	33.5 (44.9)	24/72	**6SL3120-1TE22-4AD0**	**6FX7002-5LM72-....**	1.5	4 × 4	**6FX8002-5CS46-....**
1FN3900-2WC00-...	37.0	102.0	42.2 (56.6)	60/120	**6SL3120-1TE26-0AC0**	**6FX7002-5LM32-....**	1.5	4 × 10	**6FX8002-5CS64-....**
1FN3900-3WB00-...	40.6	114.0	55.3 (74.2)	60/120	**6SL3120-1TE26-0AC0**	**6FX7002-5LM32-....**	1.5	4 × 10	**6FX8002-5CS64-....**
1FN3900-4WB00-...	49.7	140.0	66.0 (88.5)	85/141	**6SL3120-1TE28-5AA3**	**6FX7002-5LM32-....**	1.5	4 × 10	**6FX8002-5CG61-....**
1FN3900-4WB50-...	61.4	173.6	77.7 (104)	132/210	**6SL3120-1TE31-3AA3**	**6FX7002-5LM02-....**	1.5	4 × 16	**6FX8002-5CG24-....**
1FN3900-4WC00-...	72.0	202.0	83.0 (111)	132/210	**6SL3120-1TE31-3AA3**	**6FX8008-1BB61-....** [6]	–	4 × 25	**6FX8008-1BB25-....** [7]

Motor Module:	
Single Motor Module	**1**
Double Motor Module	**2**

....	Length code	**....**

For information on the cables, refer to MOTION-CONNECT connection systems

[1] For water cooling with inlet temperature 35 °C (95 °F).
[2] A reduction of up to 30% must be expected in case of motor standstill, at very low velocities, or with very short traverse paths.
[3] Velocity values refer to a DC link voltage of the drive system of 600 V DC.
[4] Optimized selection for full performance of linear motors.
[5] The current carrying capacity of the power cables complies with EN 60204-1 for installation type C, for continuous duty at an ambient air temperature of 40 °C (104 °F).
[6] Sold by the meter only (4 × 16 mm²). Connected to primary section with 16 mm² (< 1.5 m (4.92 ft)), then routed onwards through terminal box with 25 mm².
[7] Sold by the meter only (4 × 25 mm²).
[8] Pre-assembled adapter cable for motor with connection type B/E/F.

© Siemens 2022

Selection and ordering data

Feedrate force		Maximum velocity [3]		SIMOTICS L-1FN3 linear motors Version for continuous load		Weight, approx.	
				Primary section	**Secondary section** Standard extended – matching motor of the relevant component size	Primary section without/with precision cooling	Secondary section without/with heatsink profiles
F_{rated} [1) 2)]	F_{max}	v_{max} at F_{max}	v_{max} at F_{rated}				
N (lb$_f$)	N (lb$_f$)	m/min (ft/min)	m/min (ft/min)	Article No.	Article No.	kg (lb)	kg (lb)
Water cooling							
151 (33.9)	255 (57.3)	236 (774)	429 (1408)	**1FN3050-1ND00-0EA3**	**1FN3050-4SA00-0AA0**	2.2/2.7 (4.9/6.0)	0.4/0.5 (0.9/1.1)
				1FN3050-1ND00-0FA3			
302 (67.9)	510 (115)	104 (341)	199 (653)	**1FN3050-2NB80-0EA3**		3.2/4.0 (7.1/8.8)	
				1FN3050-2NB80-0FA3			
302 (67.9)	510 (115)	115 (377)	212 (696)	**1FN3100-1NC00-0BA3**	**1FN3100-4SA00-0AA0**	3.0/3.5 (6.6/7.7)	0.7/0.8 (1.5/1.8)
604 (136)	1020 (229)	164 (538)	300 (984)	**1FN3100-2NC80-0BA3**		5.4/6.2 (11.9/13.7)	
905 (203)	1530 (344)	111 (364)	206 (676)	**1FN3100-3NC00-0BA3**		7.5/8.5 (16.5/18.7)	
1210 (272)	2040 (459)	162 (532)	296 (971)	**1FN3100-4NC80-0BA3**		9.9/11.2 (21.8/24.7)	
453 (102)	766 (172)	127 (417)	230 (755)	**1FN3150-1NC20-0BA3**	**1FN3150-4SA00-0AA0**	4.1/4.6 (9.0/10.1)	1.2/1.3 (2.6/2.9)
905 (203)	1530 (344)	106 (348)	197 (646)	**1FN3150-2NB80-0BA3**		7.3/8.2 (16.1/18.1)	
1360 (306)	2300 (517)	105 (345)	195 (640)	**1FN3150-3NB80-0BA3**		10.5/11.7 (23.2/25.8)	
		156 (512)	284 (932)	**1FN3150-3NC70-0BA3**			
1810 (407)	3060 (688)	105 (345)	195 (640)	**1FN3150-4NB80-0BA3**		13.9/15.3 (30.6/33.7)	

Type of connection:	
1FN3100 to 1FN3900 motors	
Separate power and signal connections Connection cover prepared for metric screw fastening	**B**
1FN3050 motors	
Separate power and signal connections, permanently connected with exposed core ends Length: 2 m (6.56 ft)	**E**
Separate power and signal connections, permanently connected, pre-assembled with connectors Length: 0.5 m (1.64 ft)	**F**

Description	Article No.
Signal cable, pre-assembled with M17 connector	
For SIMOTICS L-1FN3 linear motors	
• 1FN3100/1FN3150	**6FX8002-2SL01-....**
• 1FN3300 ... 1FN3900	**6FX8002-2SL02-....**

For information on the cables, refer to MOTION-CONNECT connection systems

For footnotes, see next page.

© Siemens 2022

Motor type Primary section (repeated)	Rated current	Maximum current	Calculated power	**SINAMICS S120 Motor Module** [4] **Booksize format** Internal air cooling		**Power cable with complete shield** Motor connection via adapter cable with power connector for increased velocity/acceleration			
				Required rated current	For further components, see SINAMICS S120 drive system				
	I_{rated} [1]	I_{max}	$P_{el, max.}$	I_{rated}/I_{max}		Pre-assembled adapter cable for motor [6]	Power connector	Cable cross-section [5]	Pre-assembled basic cable to drive system
	A	A	kW (hp)	A	Article No.	Article No.	Size	mm²	Article No.
1FN3050-1ND00-...	2.8	5.9	1.7 (2.3)	3/9	**6SL3120-■TE13-0AD0**	Permanent cable connection	1	4 × 2.5	**6FX8002-5CS16-....**
1FN3050-1ND00-...	2.8	5.9	1.7 (2.3)	3/9	**6SL3120-■TE13-0AD0**	Permanent cable connection	1	4 × 2.5	**6FX8002-5CS16-....**
1FN3050-2NB80-...	2.8	5.9	2.3 (3.1)	3/9	**6SL3120-1TE13-0AD0**	Permanent cable connection	1	4 × 2.5	**6FX8002-5CS16-....**
1FN3050-2NB80-...	2.8	5.9	2.3 (3.1)	3/9	**6SL3120-■TE13-0AD0**	Permanent cable connection	1	4 × 2.5	**6FX8002-5CS16-....**
1FN3100-1NC00-...	2.8	5.9	2.1 (2.8)	3/9	**6SL3120-■TE13-0AD0**	**6FX7002-5LM42-....**	1	4 × 2.5	**6FX8002-5CS16-....**
1FN3100-2NC80-...	8	16.5	5.1 (6.8)	9/27	**6SL3120-■TE21-0AD0**	**6FX7002-5LM42-....**	1	4 × 2.5	**6FX8002-5CS16-....**
1FN3100-3NC00-...	8.5	17.6	6.3 (8.4)	9/27	**6SL3120-■TE21-0AD0**	**6FX7002-5LM42-....**	1	4 × 2.5	**6FX8002-5CS16-....**
1FN3100-4NC80-...	15.9	33.1	10.2 (13.7)	18/36	**6SL3120-■TE21-8AC0**	**6FX7002-5LM42-....**	1	4 × 2.5	**6FX8002-5CS16-....**
1FN3150-1NC20-...	4.5	9.4	3.2 (4.3)	5/15	**6SL3120-■TE15-0AD0**	**6FX7002-5LM42-....**	1	4 × 2.5	**6FX8002-5CS16-....**
1FN3150-2NB80-...	8	16.5	5.8 (7.8)	9/27	**6SL3120-■TE21-0AD0**	**6FX7002-5LM42-....**	1	4 × 2.5	**6FX8002-5CS16-....**
1FN3150-3NB80-...	11.9	24.8	8.44 (11.3)	18/36	**6SL3120-■TE21-8AC0**	**6FX7002-5LM42-....**	1	4 × 2.5	**6FX8002-5CS16 ....**
1FN3150-3NC70-...	16.9	35.2	10.8 (14.5)	18/36	**6SL3120-■TE21-8AC0**	**6FX7002-5LM42-....**	1	4 × 2.5	**6FX8002-5CS16-....**
1FN3150-4NB80-...	15.9	33.1	11.6 (15.6)	18/36	**6SL3120-■TE21-8AC0**	**6FX7002-5LM42-....**	1	4 × 2.5	**6FX8002-5CS16-....**

Motor Module:	
Single Motor Module	**1**
Double Motor Module	**2**

....	Length code	**....**

For information on the cables, refer to MOTION-CONNECT connection systems

[1] For water cooling with inlet temperature 35 °C (95 °F).
[2] A reduction of up to 30% must be expected in case of motor standstill, at very low velocities, or with very short traverse paths.
[3] Velocity values refer to a DC link voltage of the drive system of 600 V DC.
[4] Optimized selection for full performance of linear motors.
[5] The current carrying capacity of the power cables complies with EN 60204-1 for installation type C, for continuous duty at an ambient air temperature of 40 °C (104 °F).
[6] Pre-assembled adapter cable for motor with connection type B/E/F.

© Siemens 2022

Selection and ordering data

Feedrate force		Maximum velocity [3]		SIMOTICS L-1FN3 linear motors Version for continuous load			Weight, approx.	
				Primary section	**Secondary section** Standard – matching motor of the relevant component size	**Secondary section** Standard extended – matching motor of the relevant component size	Primary section without/with precision cooling	Secondary section without/with heatsink profiles
F_{rated} [1) 2)]	F_{max}	v_{max} at F_{max}	v_{max} at F_{rated}					
N (lb$_f$)	N (lb$_f$)	m/min (ft/min)	m/min (ft/min)	Article No.	Article No.	Article No.	kg (lb)	kg (lb)
Water cooling								
864 (194)	1470 (330)	127 (417)	228 (748)	**1FN3300-1NC10-0BA3**	**1FN3300-4SA00-0AA0**	**1FN3300-4SA12-0AA0**	8.8/9.5 (19.4/20.9)	2.4/2.6 (5.3/5.7)
1730 (389)	2940 (661)	127 (417)	224 (735)	**1FN3300-2NC10-0BA3**			15.9/17.0 (35.1/37.5)	
2595 (583)	4400 (989)	88 (289)	160 (525)	**1FN3300-3NB50-0BA3**			23.0/24.3 (50.7/53.6)	
		144 (472)	257 (843)	**1FN3300-3NC40-0BA3**			23.0/24.4 (50.7/53.8)	
3460 (778)	5870 (1320)	105 (345)	193 (633)	**1FN3300-4NB80-0BA3**			29.9/31.8 (65.9/70.1)	
2590 (582)	4400 (989)	80 (262)	147 (482)	**1FN3450-2NB40-0BA3**	**1FN3450-4SA00-0AA0**	**1FN3450-4SA12-0AA0**	22.5/23.7 (49.6/52.3)	3.8/4 (8.4/8.82)
		104 (341)	188 (617)	**1FN3450-2NB80-0BA3**				
		148 (486)	266 (873)	**1FN3450-2NC50-0BA3**				
3890 (875)	6600 (1484)	91 (299)	165 (541)	**1FN3450-3NB50-0BA3**			32.7/34.3 (72.1/75.6)	
		147 (482)	264 (866)	**1FN3450-3NC50-0BA3**				
5190 (1167)	8810 (1981)	102 (335)	186 (610)	**1FN3450-4NB80-0BA3**			42.0/44.1 (92.6/97.2)	
3460 (778)	5870 (1320)	109 (358)	197 (646)	**1FN3600-2NB80-0BA3**	**1FN3600-4SA00-0AA0**		30.4/32.0 (67.0/70.6)	4.6/5 (10.1/11.0)
5190 (1167)	8810 (1981)	108 (354)	196 (643)	**1FN3600-3NB80-0BA3**			44.3/46.4 (97.7/102.3)	
6920 (1556)	11700 (2630)	43 (141)	86 (282)	**1FN3600-4NA70-0BA3**			58.2/60.8 (128.3/134.1	
		108 (354)	195 (640)	**1FN3600-4NB80-0BA3**				
5190 (1167)	8810 (1981)	69 (226)	128 (420)	**1FN3900-2NB20-0BA3**	**1FN3900-4SA00-0AA0**		43.5/45.3 (95.9/99.9)	7.5/7.9 (16.5/17.4)
7780 (1749)	13200 (2967)	69 (226)	127 (417)	**1FN3900-3NB20-0BA3**			63.0/65.5 (138.9/144.4)	
10400 (2338)	14600 (3282)	28 (91.9)	59 (194)	**1FN3900-4NA50-0BA3**			82.0/85.1 (180.8/187.6)	
	17610 (3959)	69 (226)	127 (417)	**1FN3900-4NB20-0BA3**				

Type of connection:	
1FN3100 to 1FN3900 motors	
Separate power and signal connections Connection cover prepared for metric screw fastening	**B**

Description	Article No.
Signal cable, pre-assembled with M17 connector	
For SIMOTICS L-1FN3 linear motors	
• 1FN3100/1FN3150	**6FX8002-2SL01-....**
• 1FN3300 ... 1FN3900	**6FX8002-2SL02-....**

For information on the cables, refer to MOTION-CONNECT connection systems

For footnotes, see next page.

© Siemens 2022

Motor type Primary section (repeated)	Rated current	Maximum current	Calculated power	**SINAMICS S120 Motor Module** [4] **Booksize format** Internal air cooling		**Power cable with complete shield** Motor connection via adapter cable with power connector for increased velocity/acceleration			
				Required rated current	For further components, see SINAMICS S120 drive system				
	I_{rated} [1]	I_{max}	$P_{el, max.}$	I_{rated}/I_{max}		Pre-assembled adapter cable for motor [6]	Power connector	Cable cross-section [5]	Pre-assembled basic cable to drive system
	A	A	kW (hp)	A	Article No.	Article No.	Size	mm²	Article No.
1FN3300-1NC10-...	8.1	17.1	5.4 (7.2)	9/27	**6SL3120-■TE21-0AD0**	**6FX7002-5LM62-....**	1	4 × 2.5	**6FX8002-5CS16-....**
1FN3300-2NC10-...	16.2	34.1	10.5 (14.1)	18/36	**6SL3120-■TE21-8AC0**	**6FX7002-5LM62-....**	1	4 × 2.5	**6FX8002-5CS16-....**
1FN3300-3NB50-...	17.6	36.9	13 (17.4)	18/36	**6SL3120-■TE21- 8AC0**	**6FX7002-5LM62-....**	1	4 × 2.5	**6FX8002-5CS16 ....**
1FN3300-3NC40-...	27.3	57.4	17.3 (23.2)	30/90	**6SL3120- 1 TE23-0AD0**	**6FX7002-5LM72-....**	1.5	4 × 4	**6FX8002-5CS46-....**
1FN3300-4NB80-...	28.4	59.6	19.3 (25.9)	30/90	**6SL3120- 1 TE23-0AD0**	**6FX7002-5LM82-....**	1.5	4 × 6	**6FX8002-5CS56-....**
1FN3450-2NB40-...	16.2	34.1	12 (16.1)	18/36	**6SL3120-■TE21-8AC0**	**6FX7002-5LM62-....**	1	4 × 2.5	**6FX8002-5CS16 ....**
1FN3450-2NB80-...	20.4	42.9	13.7 (18.4)	24/48	**6SL3120- 1 TE22-4AC0**	**6FX7002-5LM62-....**	1	4 × 2.5	**6FX8002-5CS16 ....**
1FN3450-2NC50-...	28.4	59.6	17.0 (22.8)	30/90	**6SL3120- 1 TE23-0AD0**	**6FX7002-5LM82-....**	1.5	4 × 6	**6FX8002-5CS56-....**
1FN3450-3NB50-...	27.3	57.4	19.1 (25.6)	30/90	**6SL3120- 1 TE23-0AD0**	**6FX7002-5LM72-....**	1.5	4 × 4	**6FX8002-5CS46 ....**
1FN3450-3NC50-...	42.5	89.5	25.4 (34.1)	45/90	**6SL3120- 1 TE24-5AC0**	**6FX7002-5LM32-....**	1.5	4 × 10	**6FX8002-5CS64-....**
1FN3450-4NB80-...	40.8	85.8	27.3 (36.6)	45/90	**6SL3120- 1 TE24-5AC0**	**6FX7002-5LM32-....**	1.5	4 × 10	**6FX8002-5CS64-....**
1FN3600-2NB80-...	28.4	59.6	18.9 (25.3)	30/90	**6SL3120- 1 TE23-0AD0**	**6FX7002-5LM82-....**	1.5	4 × 6	**6FX8002-5CS56-....**
1FN3600-3NB80-...	42.5	89.5	28.2 (37.8)	45/90	**6SL3120- 1 TE24-5AC0**	**6FX7002-5LM32-....**	1.5	4 × 10	**6FX8002-5CS64-....**
1FN3600-4NA70-...	26.3	55.3	24.8 (33.3)	30/56	**6SL3120- 1 TE23-0AC0**	**6FX7002-5LM72-....**	1.5	4 × 4	**6FX8002-5CS46 ....**
1FN3600-4NB80-...	56.7	119.3	37.6 (50.4)	60/120	**6SL3120- 1 TE26-0AC0**	**6FX7002-5LM02-....**	1.5	4 × 16	**6FX8002-5CS24-....**
1FN3900-2NB20-...	28.4	59.6	21.9 (29.4)	30/90	**6SL3120- 1 TE23-0AD0**	**6FX7002-5LM82-....**	1.5	4 × 6	**6FX8002-5CS56-....**
1FN3900-3NB20-...	42.5	89.5	32.7 (43.9)	45/90	**6SL3120- 1 TE24-5AC0**	**6FX7002-5LM32-....**	1.5	4 × 10	**6FX8002-5CS64-....**
1FN3900-4NA50-...	29.3	61.6	31.6 (42.4)	30/90	**6SL3120- 1 TE23-0AD0**	**6FX7002-5LM82-....**	1.5	4 × 6	**6FX8002-5CS56 ....**
1FN3900-4NB20-...	56.7	119.3	43.5 (58.3)	60/120	**6SL3120- 1 TE26-0AC0**	**6FX7002-5LM02-....**	1.5	4 × 16	**6FX8002-5CS24-....**

Motor Module:	
Single Motor Module	**1**
Double Motor Module	**2**

....	Length code	**....**

For information on the cables, refer to MOTION-CONNECT connection systems

[1] For water cooling with inlet temperature 35 °C (95 °F).
[2] A reduction of up to 30% must be expected in case of motor standstill, at very low velocities, or with very short traverse paths.
[3] Velocity values refer to a DC link voltage of the drive system of 600 V DC.
[4] Optimized selection for full performance of linear motors.
[5] The current carrying capacity of the power cables complies with EN 60204-1 for installation type C, for continuous duty at an ambient air temperature of 40 °C (104 °F).
[6] Pre-assembled adapter cable for motor with connection type B/E/F.

© Siemens 2022

Selection and ordering data

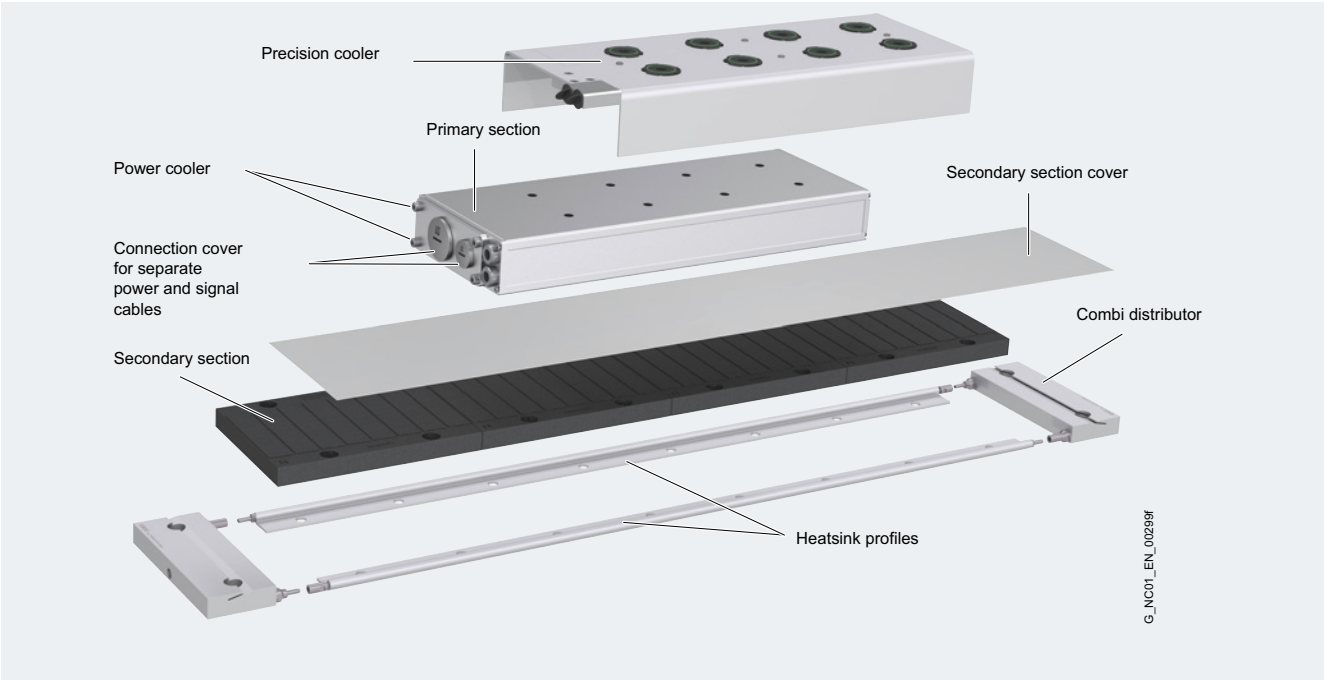

SIMOTICS L-1FN3 linear motors Version for peak load Type	**Optional components Precision cooler** Article No.
1FN3050-2W...	**1FN3050-2PK00-0AA0**
1FN3100-2W...	**1FN3100-2PK00-0AA0**
1FN3100-3W...	**1FN3100-3PK00-0AA0**
1FN3100-4W...	**1FN3100-4PK00-0AA0**
1FN3100-5W...	**1FN3100-5PK00-0AA0**
1FN3150-2W...	**1FN3150-2PK00-0AA0**
1FN3150-3W...	**1FN3150-3PK00-0AA0**
1FN3150-4W...	**1FN3150-4PK00-0AA0**
1FN3150-5W...	**1FN3150-5PK00-0AA0**
1FN3300-2W...	**1FN3300-2PK00-0AA0**
1FN3300-3W...	**1FN3300-3PK00-0AA0**
1FN3300-4W...	**1FN3300-4PK00-0AA0**
1FN3450-2W...	**1FN3450-2PK00-0AA0**
1FN3450-3W...	**1FN3450-3PK00-0AA0**
1FN3450-4W...	**1FN3450-4PK00-0AA0**
1FN3600-2W...	**1FN3600-2PK00-0AA0**
1FN3600-3W...	**1FN3600-3PK00-0AA0**
1FN3600-4W...	**1FN3600-4PK00-0AA0**
1FN3900-2W...	**1FN3900-2PK00-0AA0**
1FN3900-3W...	**1FN3900-3PK00-0AA0**
1FN3900-4W...	**1FN3900-4PK00-0AA0**
Can be ordered optionally in version with increased ruggedness, incl. O-rings	**1FN3...- ■ PK00-0AA0-Z R01**

SIMOTICS L-1FN3 linear motors Version for continuous load Type	**Optional components Precision cooler** Article No.
1FN3050-1N...	**1FN3050-1PK10-0AA0**
1FN3050-2N...	**1FN3050-2PK10-0AA0**
1FN3100-1N...	**1FN3100-1PK10-0AA0**
1FN3100-2N...	**1FN3100-2PK10-0AA0**
1FN3100-3N...	**1FN3100-3PK10-0AA0**
1FN3100-4N...	**1FN3100-4PK10-0AA0**
1FN3150-1N...	**1FN3150-1PK10-0AA0**
1FN3150-2N...	**1FN3150-2PK10-0AA0**
1FN3150-3N...	**1FN3150-3PK10-0AA0**
1FN3150-4N...	**1FN3150-4PK10-0AA0**
1FN3300-1N...	**1FN3300-1PK10-0AA0**
1FN3300-2N...	**1FN3300-2PK10-0AA0**
1FN3300-3N...	**1FN3300-3PK10-0AA0**
1FN3300-4N...	**1FN3300-4PK10-0AA0**
1FN3450-2N...	**1FN3450-2PK10-0AA0**
1FN3450-3N...	**1FN3450-3PK10-0AA0**
1FN3450-4N...	**1FN3450-4PK10-0AA0**
1FN3600-2N...	**1FN3600-2PK10-0AA0**
1FN3600-3N...	**1FN3600-3PK10-0AA0**
1FN3600-4N...	**1FN3600-4PK10-0AA0**
1FN3900-2N...	**1FN3900-2PK10-0AA0**
1FN3900-3N...	**1FN3900-3PK10-0AA0**
1FN3900-4N...	**1FN3900-4PK10-0AA0**
Can be ordered optionally in version with increased ruggedness, incl. O-rings	**1FN3...- ■ PK10-0AA0-Z R01**

© Siemens 2022

Selection and ordering data

SIMOTICS L-1FN3 linear motors	**Optional components**			
	Secondary section cover		**Cover end pieces for secondary section cover**[2]	**Protective mat with yoke function**[3]
Type	Integrated[1]	Segmented	Retaining of the integrated cover without heatsink profiles	
	Article No.	Article No.	Article No.	Article No.
1FN3050-...	**1FN3050-0TB00-1 ■ ■ 0**	**1FN3050-4TP00-1A ■ ■**	**1FN3050-0TC00-0AA0**	**–**
1FN3100-...	**1FN3100-0TB00-1 ■ ■ 0**	**1FN3100-4TP00-1A ■ ■**	**1FN3100-0TC00-0AA0**	**–**
1FN3150-...	**1FN3150-0TB00-1 ■ ■ 0**	**1FN3150-4TP00-1A ■ ■**	**1FN3150-0TC00-0AA0**	**–**
1FN3300-...	**1FN3300-0TB00-1 ■ ■ 0**	**1FN3300-4TP00-1A ■ ■**	**1FN3300-0TC00-0AA0**	**1FN3300-4RS00-0AB0**
1FN3450-...	**1FN3450-0TB00-1 ■ ■ 0**	**1FN3450-4TP00-1A ■ ■**	**1FN3450-0TC00-0AA0**	**1FN3450-4RS00-0AB0**
1FN3600-...	**1FN3600-0TB00-1 ■ ■ 0**	**1FN3600-4TP00-1A ■ ■**	**–**	**–**
1FN3900-...	**1FN3900-0TB00-1 ■ ■ 0**	**1FN3900-4TP00-1A ■ ■**	**–**	**–**

Number of secondary sections	0	**A**
	10	**B**
	20	**C**
	30	**D**
	40	**E**
	50	**F**

Number of secondary sections for all motors	2.5	**C**	**5**
	3.0	**D**	**0**
	3.5	**D**	**5**
	4.0	**E**	**0**
	5.0	**F**	**0**
Number of secondary sections for 1FN3600/ 1FN3900 motors	5.5	**F**	**5**
	6.5	**G**	**5**

Example:

Maximum length of the integrated secondary section cover for the following motors is:

- 1FN3050 to 1FN3150
  length code xxx-1FA0 50 units
- 1FN3100 to 1FN3900
  length code xxx-1DC0 32 units

0	**A**
1	**B**
2	**C**
3	**D**
4	**E**
5	**F**
6	**G**
7	**H**
8	**J**
9	**K**

1) Integrated cover for several secondary sections. The maximum length of the secondary section cover is 6 m (19.7 ft). For the following motors, this corresponds to: 1FN3050 to 1FN3150, a maximum number of 50 secondary sections (AB to FA). 1FN3300 to 1FN3900, a maximum number of 32 secondary sections (AB to DC).

2) The secondary section end pieces are designed to allow clamping of the integrated secondary section cover.

3) Can be ordered with a batch size of 4 units.

SIMOTICS L-1FN3 linear motors	**Optional components**			
Type	**Heatsink profile**[4]	**Secondary section end pieces**		
		Combi distributor	**Combi adapter**	**Combi end piece**
		Parallel water connection for all heatsink profiles	Combi adapter and end piece can only be implemented together.	
			Single-sided water connection	Water diversion
	Article No.	Article No.	Article No.	Article No.
1FN3050-...	**1FN3002-0TK0 ■ -1 ■ ■ 0**	**1FN3050-0TJ01-0AA0**	**1FN3050-0TG01-0AA0**	**1FN3050-0TF01-0AA0**
1FN3100-...	**1FN3002-0TK0 ■ -1 ■ ■ 0**	**1FN3100-0TJ01-0AA0**	**1FN3100-0TG01-0AA0**	**1FN3100-0TF01-0AA0**
1FN3150-...	**1FN3002-0TK0 ■ -1 ■ ■ 0**	**1FN3150-0TJ01-0AA0**	**1FN3150-0TG01-0AA0**	**1FN3150-0TF01-0AA0**
1FN3300-...	**1FN3003-0TK0 ■ -1 ■ ■ 0**	**1FN3300-0TJ01-0AA0**	**1FN3300-0TG01-0AA0**	**1FN3300-0TF01-0AA0**
1FN3450-...	**1FN3003-0TK0 ■ -1 ■ ■ 0**	**1FN3450-0TJ01-0AA0**	**1FN3450-0TG01-0AA0**	**1FN3450-0TF01-0AA0**
1FN3600-...	**1FN3004-0TK0 ■ -1 ■ ■ 0**	**1FN3600-0TJ01-0AA0**	**–**	**–**
1FN3900-...	**1FN3005-0TK0 ■ -1 ■ ■ 0**	**1FN3900-0TJ01-0AA0**	**–**	**–**

With plug-in coupler prepared for connection to combi distributor with plug-in coupler, combi adapter with plug-in coupler, combi end piece with plug-in coupler or as intermediate unit for heatsink profile with cable grommet nipple	**4**		
1FN3050 to 1FN3450 motors[4]: **Grommet nipple only on right end** of secondary section track	**6**		
1FN3600/1FN3900 motors: **Grommet nipple on both ends** of secondary section track	**6**		
1FN3050 to 1FN3450 motors[5]: **Grommet nipple only on left end** of secondary section track	**7**		

Number of secondary sections	
A	0
B	10
C	20

A	0
B	1
C	2
D	3
E	4
F	5
G	6
H	7
J	8
K	9

4) 1FN3050 to 1FN3450 motors:
2 units required per secondary section track.
1FN3600 to 1FN3900:
3 units required per secondary section track.
The maximum available length of a single-part heatsink profile is 3 m (9.84 ft).
For the following motors, this corresponds to:
1FN3050 to 1FN3150, a maximum number of 24 secondary sections (AB to CE)
1FN3300 to 1FN3900, a maximum number of 16 secondary sections (AB to BG).

5) Available only in length AC (equals 2 secondary sections). The difference in the secondary section track length must be compensated through assembly with the heatsink profile 1FN300.-0TK04-1..0.

© Siemens 2022

Overview

Recommended linear measuring systems for SIMOTICS L-1FN3 linear motors

Type	Incremental encoder sin/cos 1 V_{pp} encapsulated	
	Heidenhain LS 187	**Heidenhain LS 487**
Signal cycle	20 µm	20 µm
Acceleration in measuring direction, max.	100 m/s² (328 ft/s²)	100 m/s² (328 ft/s²)
Traversing velocity, max.	120 m/min (394 ft/min)	120 m/min (394 ft/min)
Measuring length, max.	3040 mm (120 in)	2040 mm (80.3 in)
Output signal	1 V_{pp}	1 V_{pp}

Type	Incremental encoder sin/cos 1 V_{pp} open	
	Heidenhain LIDA 485	**Renishaw RTLC 20/TONIC**
Signal cycle	20 µm	20 µm
Acceleration in measuring direction, max.[1]	200 m/s² (656 ft/s²)	600 m/s² (1969 ft/s²)
Traversing velocity, max.	480 m/min (1575 ft/min)	600 m/min (1969 ft/min)
Measuring length, max.	30040 mm (1183 in)	25000 mm (984 in)
Output signal	1 V_{pp}	1 V_{pp}

Absolute encoders with DRIVE-CLiQ

Absolute measuring systems with integrated DRIVE-CLiQ interface are available from various manufacturers. The absolute encoders can be used as a motor feedback system.

An up-to-date list of the relevant manufacturers and available measuring systems can be viewed on the internet at:
http://support.automation.siemens.com/WW/view/en/65402168
It is also possible to use absolute measuring systems with EnDat 2.1.

Overview

Liquid cooling

These are third-party products whose fundamental suitability is familiar to us. It goes without saying that equivalent products from other manufacturers may be used. Our recommendations are to be seen as helpful information, not as requirements or regulations. We do not accept liability for the quality of non-Siemens products.

Please get in touch with the cooler manufacturers listed below for technical information.

ait-deutschland GmbH
www.kkt-chillers.com

BKW Kälte-Wärme-Versorgungstechnik GmbH
www.bkw-kuema.de

Helmut Schimpke und Team Industriekühlanlagen GmbH + Co. KG
www.schimpke.com

Hydac System GmbH
www.hydac.com

Pfannenberg GmbH
www.pfannenberg.com

Rittal GmbH & Co. KG
www.rittal.com

For design information about the coolers, refer to the SIMOTICS L-1FN3 Linear Motors Configuration Manual.

[1] Refers to the measuring head.

© Siemens 2022

Overview

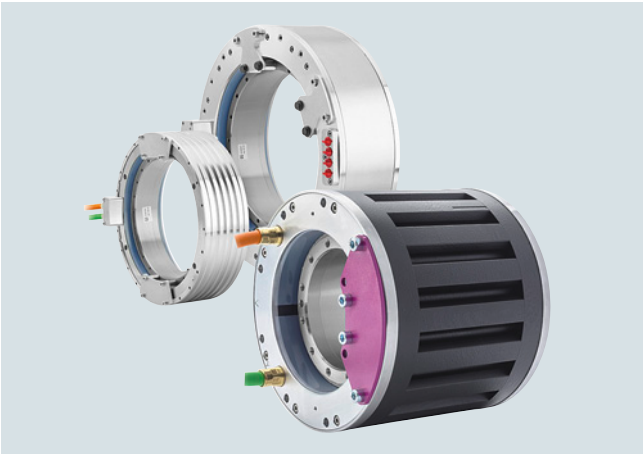

SIMOTICS T-1FW6 built-in torque motors with jacket cooling (in center), naturally cooled (on right), and with integrated cooling (on left)

SIMOTICS T-1FW6 built-in torque motors are liquid-cooled or naturally cooled multi-pole permanent-magnet AC synchronous motors with a hollow shaft. The motors are supplied as built-in components. For a complete drive unit, an additional bearing and shaft encoder are required.

Each frame size is available in different axis lengths. Stators and rotors are equipped with flanges with centering surfaces and threaded holes for installation in the machine.

Benefits

- No elasticity in the drive train
- High availability, since there are no gear components subject to wear in the drive train
- High torque, compact design, and low construction volume
- Low moment of inertia
- Direct coupling to the machine using flanges

Additionally for SIMOTICS T-1FW6 High Speed:

- Higher speeds while maintaining the main dimensions

Application

In conjunction with the SINAMICS S120 drive system, the SIMOTICS T-1FW6 built-in torque motors can be used for the following machine applications:

- Rotary indexing tables and indexing heads
- Rotary indexing machines
- Swivel axes
- Tool turrets
- Tool spindles
- Roller and cylinder drives
- Infeed and handling axes
- Tablet presses
- Medical systems
- Measuring machines

Additional applications for SIMOTICS T-1FW6 High Speed:

- Rotary tables for milling/turning applications
- Gear cutting machines
- Turning spindles

Design

The SIMOTICS T-1FW6 built-in torque motor comprises the following components:

Stator

Design in 3-phase AC winding. The stator is generally designed for operation with liquid cooling.

Rotor

Cylindrical hollow shaft equipped with permanent magnets.

If the main cooler and precision cooler are used together in a cooling unit for motors with integrated dual-circuit cooling, a cooling connection adapter (accessory) can be ordered for simpler connection.

Cooler types

The design of the cooling system is dependent on the frame size (external diameter) of the motor.

SIMOTICS T-1FW6 built-in torque motor Type	**Type of cooling**
1FW6050 and 1FW6060	Integrated water cooling with one cooling circuit
1FW6053 and 1FW6063	Natural cooling
1FW6090 ... 1FW6150 1FW6092 ... 1FW6152	Jacket water cooling
1FW6160 ... 1FW6290 1FW6192 and 1FW6232	Integrated water cooling with two cooling circuits

© Siemens 2022

Design

Naturally cooled motors

Naturally cooled motors have the same dimensions as water-cooled motors in frame sizes 1FW6050 and 1FW6060, but have a lower continuous torque capability because they are naturally cooled. They can be used for any application for which liquid-cooled motors would be deemed undesirable or unnecessary. As the mechanical interfaces are also compatible in addition to the dimensions, the cooling method can be changed without high associated costs.

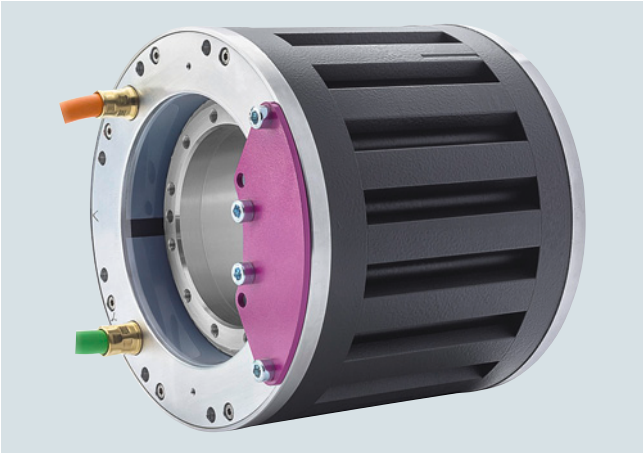

Components of naturally cooled motors in frame sizes 1FW6053 and 1FW6063 (rotor and stator)

Motors with integrated single-circuit cooling

These motors have a ready-to-connect, integrated single-circuit cooling system; they are compact and therefore suitable for easy integration into a machine.

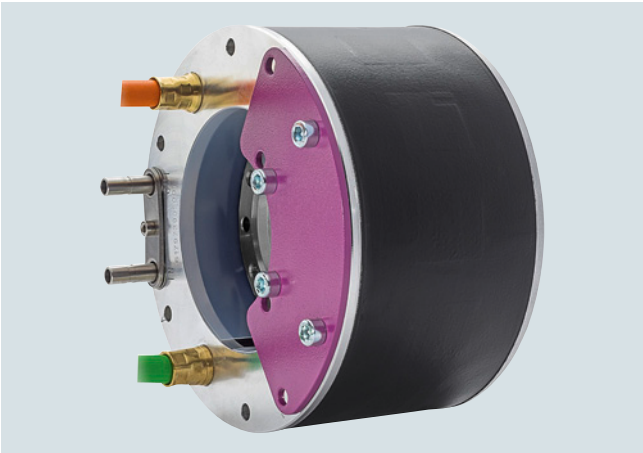

Motor components of sizes 1FW6050 and 1FW6060 with integrated single-circuit cooling (rotor, stator)

Motors with jacket water cooling

The coolant inlet/return flow circuit must be provided by the machine manufacturer in the surrounding construction.

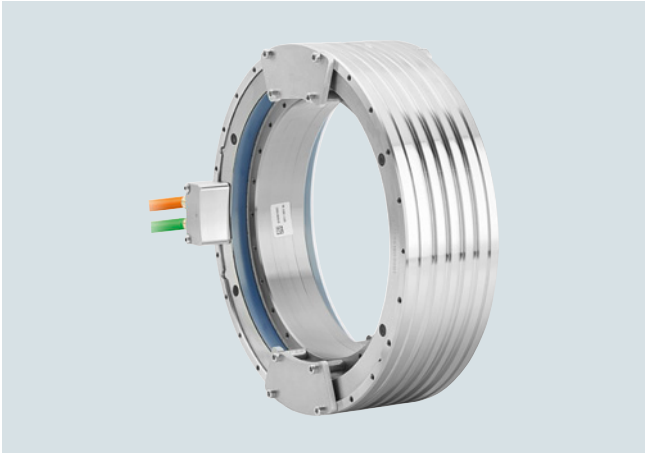

Motor components of sizes 1FW6090 to 1FW6150 with jacket water cooling (rotor and stator)

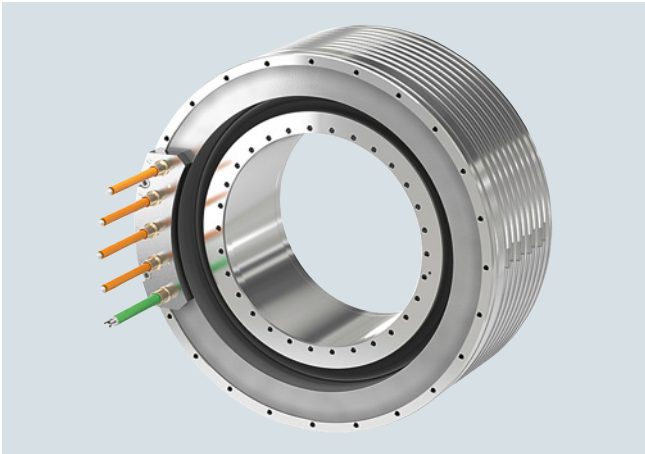

Motor components of sizes 1FW6092 to 1FW6152 with jacket water cooling (rotor and stator)

© Siemens 2022

Design

Motors with integrated dual-circuit cooling

These motors feature a ready-to-connect, integrated dual-circuit water cooling system and are therefore thermally insulated against the mechanical axis construction to a considerable extent.

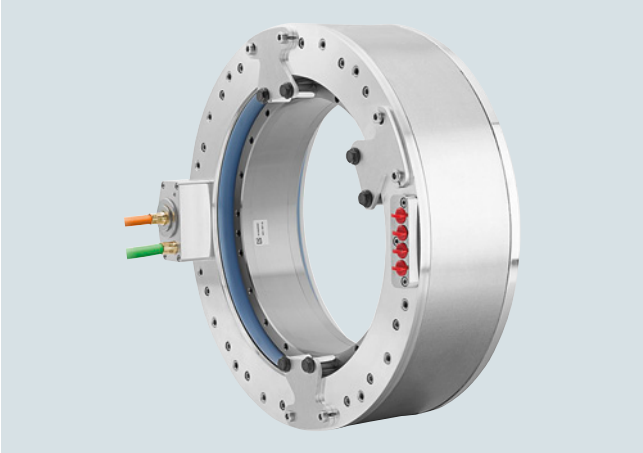

Motor components of sizes 1FW6160 to 1FW6290 with integrated dual-circuit water cooling (rotor and stator)

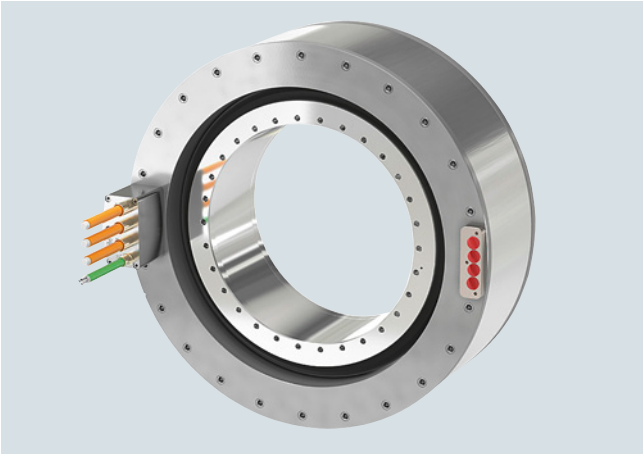

Motor components of sizes 1FW6192 to 1FW6232 with integrated dual-circuit water cooling (rotor and stator)

Integration

The SIMOTICS T-1FW6 built-in torque motors supplied via the SINAMICS S120 drive system are designed for operation on a 600 V DC link voltage level.

The cable connection is brought out of the front face of the stator. The cable end has a pre-assembled connector or exposed cable cores depending on the motor design. The length of the power and signal cables from the motor to the drive system must not exceed 50 m.

Absolute measuring systems with DRIVE-CLiQ

Measuring systems with integrated DRIVE-CLiQ interface are available from various manufacturers. The encoders can be used as a motor feedback system.

An up-to-date list of the relevant manufacturers and available measuring systems can be viewed on the internet at:

https://support.automation.siemens.com/WW/view/en/65402168

It is also possible to use absolute measuring systems with EnDat 2.1 or incremental systems with 1 V_{pp}.

Technical specifications

Product name	SIMOTICS T-1FW6 built-in torque motor
Motor type	Synchronous motor with permanent magnet rotor
Torque ripple	≤ 1.5% M_0
Coolant inlet temperature, maximum	35 °C (95 °F) for 1FW6 Standard 20 °C (68 °F) for 1FW6 High Speed
Pressure in cooling circuit, maximum	10 bar (static)
Thermal motor protection in accordance with DIN 44081/DIN 44082 [1]	1 × PTC thermistor with response threshold +130 °C (266 °F)
Temperature monitoring in accordance with EN 60034-11) [1]	1 × Pt1000 temperature sensor
Stator winding insulation in accordance with EN 60034-1	Temperature class 155 (F)
Type of construction	Individual components: Stator, rotor
Degree of protection in accordance with EN 60034-5	IP23 The final degree of protection (minimum degree of protection is IP54) for the installed motor is determined by the machine manufacturer. Protection against touch, foreign bodies, and water for electrical equipment is specified in accordance with IEC 60034-5.
Measuring system (not included in scope of supply)	Select according to basic conditions specific to the application and the drive.
Connection, electrical	Permanently connected power and signal cables
Paint finish	Unpainted
Rating plate	2 units, inc. 1 unit enclosed separately
Certificate of suitability	cURus

[1] Evaluation via SME120/SME125 Sensor Module or TM120 Terminal Module (see SINAMICS S120 drive system).

© Siemens 2022

SIMOTICS T-1FW6 Standard built-in torque motors

Selection and ordering data

Maximum torque	Static torque [1]	Rated torque [2]	Speed at maximum torque, max. [2]	Rated speed [2]	**SIMOTICS T-1FW6 Standard built-in torque motors**	Moment of inertia rotor	Weight, approx. stator + rotor
M_{max}	M_0	M_{rated}	n_{max} at M_{max}	n_{rated}		J	m
Nm (lb$_f$-ft)	Nm (lb$_f$-ft)	Nm (lb$_f$-ft)	rpm	rpm	Article No.	10^{-2}kgm^2 (lb$_f$-in-s^2)	kg (lb)
Natural cooling							
34.4 (25.4)	11.3 (8.3)	9.91 (7.31)	695	600	**1FW6053-0■B03-0F■3**	0.139 (0.012)	3.7 (8.2)
57.5 (42.4)	16.6 (12.2)	13.8 (10.2)	374	600	**1FW6053-0■B05-0F■3**	0.267 (0.024)	6.5 (14.3)
81.2 (59.9)	19.2 (14.2)	15.2 (11.2)	677	600	**1FW6053-0■B07-0K■3**	0.39 (0.03)	8.5 (18.7)
116 (85.6)	24.6 (18.1)	18.6 (13.7)	428	600	**1FW6053-0■B10-0K■3**	0.488 (0.043)	12 (26.5)
174 (128)	32.5 (24.0)	22.9 (16.9)	653	600	**1FW6053-0■B15-1J■3**	0.691 (0.061)	19.8 (43.7)
64.5 (47.6)	15.5 (11.4)	14 (10.3)	325	400	**1FW6063-0■B03-0F■3**	0.347 (0.031)	7.7 (17.0)
123 (90.7)	25.7 (19.0)	22.2 (16.4)	396	400	**1FW6063-0■B05-0K■3**	0.665 (0.059)	10.5 (23.2)
166 (122)	31.5 (23.2)	25.9 (19.1)	250	400	**1FW6063-0■B07-0K■3**	0.904 (0.080)	13.1 (28.9)
226 (167)	38.1 (28.1)	28.5 (21.0)	470	400	**1FW6063-0■B10-1J■3**	1.21 (0.11)	16.8 (37.0)
332 (245)	49 (36.1)	38.9 (28.7)	257	400	**1FW6063-0■B15-1J■3**	1.72 (0.15)	23 (50.7)

Cable outlet only for 1FW6053 and 1FW6063: Axial Tangential	**K** **L**
Type of connection: Permanently connected power and signal cables with exposed core ends [4] Length: 2 m (6.56 ft) Permanently connected power and signal cables pre-assembled with connectors Length: 0.5 m (1.64 ft)	**C** **D**

For footnotes, see next page.

© Siemens 2022

Motor type (repeated)	Stall current [1]	Rated current [2]	Maximum current [2]	Calculated power	SINAMICS S120 Motor Module [3]		Power cable with complete shield, Motor connection via power connector [4]		
					Required rated current	**Booksize format** Internal air cooling For further components, see SINAMICS S120 drive system	Power connector	Cable cross-section [5]	Pre-assembled basic cable to drive system
	I_0	I_{rated}	I_{max}	$P_{el, max}$	I_{rated} / I_{max}				
	A	A	A	kW (hp)	A	Article No.	Size	mm²	Article No.
Natural cooling									
1FW6053-0.B03-0F..	2.3	2.04	7.61	4.2 (5.6)	3/9	**6SL3120-■TE13-0AD0**	1	4 × 2.5	**6FX8002-5CS16-....**
1FW6053-0.B05-0F..	2	1.7	7.64	4.6 (6.2)	3/9	**6SL3120-■TE13-0AD0**	1	4 × 2.5	**6FX8002-5CS16-....**
1FW6053-0.B07-0K..	3.4	2.68	14.6	8.8 (11.8)	5/15	**6SL3120-■TE15-0AD0**	1	4 × 2.5	**6FX8002-5CS16-....**
1FW6053-0.B10-0K..	3.1	2.31	14.6	9.2 (12.3)	5/15	**6SL3120-■TE15-0AD0**	1	4 × 2.5	**6FX8002-5CS16-....**
1FW6053-0.B15-1J..	5.4	3.78	29.1	17.5 (23.5)	18/36	**6SL3120-■TE21-8AC0**	1	4 × 2.5	**6FX8002-5CS16-....**
1FW6063-0.B03-0F..	2.1	1.86	9.81	6 (8.05)	3/9	**6SL3120-■TE13-0AD0**	1	4 × 2.5	**6FX8002-5CS16-....**
1FW6063-0.B05-0K..	3.3	2.8	17.7	10.3 (13.8)	9/27	**6SL3120-■TE21-0AD0**	1	4 × 2.5	**6FX8002-5CS16-....**
1FW6063-0.B07-0K..	3	2.42	17.8	10.9 (14.6)	9/27	**6SL3120-■TE21-0AD0**	1	4 × 2.5	**6FX8002-5CS16-....**
1FW6063-0.B10-1J..	5	3.71	31.5	19.1 (25.6)	18/36	**6SL3120-■TE21-8AC0**	1	4 × 2.5	**6FX8002-5CS16-....**
1FW6063-0.B15-1J..	4.3	3.45	31.5	20.4 (27.4)	18/36	**6SL3120-■TE21-8AC0**	1	4 × 2.5	**6FX8002-5CS16-....**

Motor Module:	
Single Motor Module	**1**
Double Motor Module	**2**

Length code	**....**

For information on the cables, refer to MOTION-CONNECT connection systems

6

[1] Torque and current at low speeds.
[2] The values refer to a supply voltage of 400 V 3 AC ±10% (drive system DC link voltage 600 V DC).
[3] Optimized selection for full performance of torque motors.
[4] For type of connection with exposed core ends, power and signal connectors are not included in the scope of supply of the motor and must be ordered separately.
[5] The current carrying capacity of the power cables complies with EN 60204-1 for installation type C, for continuous duty at an ambient air temperature of 40 °C (104 °F).

© Siemens 2022

Selection and ordering data

Maximum torque	Static torque [1) 3)]	Rated torque [2) 3)]	Speed at maximum torque, max. [2)]	Rated speed [2)]	**SIMOTICS T-1FW6 Standard built-in torque motors**	Moment of inertia rotor	Weight, approx. stator + rotor
M_{max}	M_0	M_{rated}	n_{max} at M_{max}	n_{rated}		J	m
Nm (lb_f-ft)	Nm (lb_f-ft)	Nm (lb_f-ft)	rpm	rpm	Article No.	10^{-2}kgm^2 (lb_f-in-s^2)	kg (lb)
Water cooling							
34.4 (25.4)	24.2 (17.8)	23.2 (17.1)	697	940	**1FW6050-0■B03-0F■3**	0.139 (0.012)	3.1 (6.8)
57.5 (42.4)	40.4 (29.8)	39.5 (29.1)	376	525	**1FW6050-0■B05-0F■3**	0.267 (0.024)	5.9 (13.0)
80.6 (59.5)	56.6 (41.7)	55.7 (41.1)	236	349	**1FW6050-0■B07-0F■3**	0.39 (0.03)	7.9 (17.4)
81.2 (59.9)	53 (39.1)	50.9 (37.5)	685	895	**1FW6050-0■B07-0K■3**		
116 (85.6)	75.8 (55.9)	73.7 (54.4)	437	589	**1FW6050-0■B10-0K■3**	0.488 (0.043)	11.4 (25.1)
174 (128)	114 (84.1)	112 (82.6)	234	348	**1FW6050-0■B15-0K■3**	0.691 (0.061)	19.2 (42.3)
		109 (80.4)	658	850	**1FW6050-0■B15-1J■3**		
64.5 (47.6)	33.3 (24.6)	32 (23.6)	330	633	**1FW6060-0■B03-0F■3**	0.347 (0.031)	7.1 (15.7)
123 (90.7)	63.1 (46.5)	62 (45.7)	126	309	**1FW6060-0■B05-0F■3**	0.665 (0.059)	9.9 (21.8)
		60.6 (44.7)	399	663	**1FW6060-0■B05-0K■3**		
166 (122)	85.4 (63.0)	84.3 (62.2)	43.3	203	**1FW6060-0■B07-0F■3**	0.904 (0.080)	12.5 (27.6)
		83 (61.2)	256	464	**1FW6060-0■B07-0K■3**		
231 (170)	119 (87.8)	117 (86.3)	133	302	**1FW6060-0■B10-0K■3**	1.21 (0.11)	16.2 (35.7)
226 (167)	116 (85.6)	111 (81.9)	471	708	**1FW6060-0■B10-1J■3**		
339 (250)	174 (128)	172 (127)	27.6	174	**1FW6060-0■B15-0K■3**	1.72 (0.15)	22.4 (49.4)
332 (245)	171 (126)	166 (122)	260	442	**1FW6060-0■B15-1J■3**		

Cable outlet only for 1FW6050 and 1FW6060: Axial Tangential	**W** **T**
Type of connection: Permanently connected power and signal cables with exposed core ends [4)] Length: 2 m (6.56 ft) Permanently connected power and signal cables pre-assembled with connectors Length: 0.5 m (1.64 ft)	**C** **D**

For footnotes, see next page.

© Siemens 2022

Motor type (repeated)	Stall current 1) 3)	Rated current 2) 3)	Maximum current 2)	Calculated power	**SINAMICS S120 Motor Module 5)** Required rated current	**Booksize format** Internal air cooling For further components, see SINAMICS S120 drive system	**Power cable with complete shield** Motor connection via power connector 4) Power connector	Cable cross-section 6)	Pre-assembled basic cable to drive system
	I_0	I_{rated}	I_{max}	$P_{el, max}$	I_{rated} / I_{max}				
	A	A	A	kW (hp)	A	Article No.	Size	mm²	Article No.
Water cooling									
1FW6050-0.B03-0F..	5	4.8	7.6	4.23 (5.67)	5/15	**6SL3120-■TE15-0AD0**	1	4 × 2.5	**6FX8002-5CS16-....**
1FW6050-0.B05-0F..	5.1	4.9	7.6	4.59 (6.16)	5/15	**6SL3120-■TE15-0AD0**	1	4 × 2.5	**6FX8002-5CS16-....**
1FW6050-0.B07-0F..	5.1	5.2	7.6	4.85 (6.50)	5/15	**6SL3120-■TE15-0AD0**	1	4 × 2.5	**6FX8002-5CS16-....**
1FW6050-0.B07-0K..	9.3	9	14	8.79 (11.79)	9/27	**6SL3120-■TE21-0AD0**	1	4 × 2.5	**6FX8002-5CS16-....**
1FW6050-0.B10-0K..	9.3	9.1	14	9.16 (12.28)	9/27	**6SL3120-■TE21-0AD0**	1	4 × 2.5	**6FX8002-5CS16-....**
1FW6050-0.B15-0K..	9.3	9.2	14	9.74 (13.06)	9/27	**6SL3120-■TE21-0AD0**	1	4 × 2.5	**6FX8002-5CS16-....**
1FW6050-0.B15-1J..	18	18	29	17.5 (23.5)	18/36	**6SL3120-■TE21-8AC0**	1	4 × 2.5	**6FX8002-5CS16-....**
1FW6060-0.B03-0F..	4.5	4.3	9.8	5.91 (7.93)	5/15	**6SL3120-■TE15-0AD0**	1	4 × 2.5	**6FX8002-5CS16-....**
1FW6060-0.B05-0F..	4.5	4.4	9.8	6.65 (8.92)	5/15	**6SL3120-■TE15-0AD0**	1	4 × 2.5	**6FX8002-5CS16-....**
1FW6060-0.B05-0K..	8.1	7.7	17	10.2 (13.7)	9/27	**6SL3120-■TE21-0AD0**	1	4 × 2.5	**6FX8002-5CS16-....**
1FW6060-0.B07-0F..	4.5	4.4	9.8	7.06 (9.47)	5/15	**6SL3120-■TE15-0AD0**	1	4 × 2.5	**6FX8002-5CS16-....**
1FW6060-0.B07-0K..	8.1	7.9	17	10.8 (14.5)	9/27	**6SL3120-■TE21-0AD0**	1	4 × 2.5	**6FX8002-5CS16-....**
1FW6060-0.B10-0K..	8.1	7.9	17	11.8 (15.8)	9/27	**6SL3120-■TE21-0AD0**	1	4 × 2.5	**6FX8002-5CS16-....**
1FW6060-0.B10-1J..	15	14	31	19.1 (25.6)	18/36	**6SL3120-■TE21-8AC0**	1	4 × 2.5	**6FX8002-5CS16-....**
1FW6060-0.B15-0K..	8.1	8	17	12.9 (17.3)	9/27	**6SL3120-■TE21-0AD0**	1	4 × 2.5	**6FX8002-5CS16-....**
1FW6060-0.B15-1J..	15	14	31	20.3 (27.2)	18/36	**6SL3120-■TE21-8AC0**	1	4 × 2.5	**6FX8002-5CS16-....**

Motor Module:	
Single Motor Module	**1**
Double Motor Module	**2**

Length code	**....**

For information on the cables, refer to MOTION-CONNECT connection systems

6

1) Torque and current at low speeds.
2) The values refer to a supply voltage of 400 V 3 AC ±10% (drive system DC link voltage 600 V DC).
3) In case of water cooling with inlet temperature of 35 °C (95 °F) and maximum rotor flange temperature of 60 °C (140 °F).
4) For type of connection with exposed core ends, power and signal connectors are not included in the scope of supply of the motor and must be ordered separately.
5) Optimized selection for full performance of torque motors.
6) The current carrying capacity of the power cables complies with EN 60204-1 for installation type C, for continuous duty at an ambient air temperature of 40 °C (104 °F).

© Siemens 2022

Selection and ordering data

Maximum torque	Static torque [1) 3)]	Rated torque [2) 3)]	Speed at maximum torque, max. [2)]	Rated speed [2)]	**SIMOTICS T-1FW6 Standard built-in torque motors**	Moment of inertia rotor	Weight, approx. stator + rotor
M_{max}	M_0	M_{rated}	n_{max} at M_{max}	n_{rated}		J	m
Nm (lb_f-ft)	Nm (lb_f-ft)	Nm (lb_f-ft)	rpm	rpm	Article No.	10^{-2}kgm^2 (lb_f-in-s^2)	kg (lb)
Water cooling							
179 (132)	119 (87.8)	113 (83.3)	50.2	142	**1FW6090-0■B05-0F■3**	1.52 (0.13)	9.2 (20.3)
		109 (80.4)	142	250	**1FW6090-0■B05-0K■3**		
251 (185)	166 (122)	154 (114)	128	224	**1FW6090-0■B07-0K■3**	2.2 (0.2)	12.2 (26.9)
		142 (105)	278	428	**1FW6090-0■B07-1J■2**		
358 (264)	238 (176)	231 (170)	12.4	83.9	**1FW6090-0■B10-0K■3**	3.09 (0.27)	17.2 (37.9)
		216 (159)	170	272	**1FW6090-0■B10-1J■3**		
537 (396)	357 (263)	338 (249)	80.6	154	**1FW6090-0■B15-1J■3**	4.65 (0.41)	27.2 (60.0)
		319 (235)	202	312	**1FW6090-0■B15-2J■3**		
439 (324)	258 (190)	241 (178)	46.5	132	**1FW6130-0■B05-0K■3**	6.37 (0.56)	13.2 (29.1)
		217 (160)	181	308	**1FW6130-0■B05-1J■3**		
614 (453)	361 (266)	344 (254)	21.5	96.1	**1FW6130-0■B07-0K■3**	8.92 (0.79)	18.2 (40.1)
		324 (239)	109	201	**1FW6130-0■B07-1J■3**		
878 (648)	516 (381)	484 (357)	50.9	123	**1FW6130-0■B10-1J■3**	12.7 (1.1)	25.2 (55.6)
		449 (331)	148	249	**1FW6130-0■B10-2J■3**		
1320 (974)	775 (572)	743 (548)	16	78.4	**1FW6130-0■B15-1J■3**	19.1 (1.7)	38.2 (84.2)
		714 (527)	78.8	152	**1FW6130-0■B15-2J■3**		
710 (524)	360 (266)	338 (249)	108	234	**1FW6150-0■B05-1J■3**	10.1 (0.9)	21.7 (47.8)
		298 (220)	332	654	**1FW6150-0■B05-4F■3**		
994 (733)	504 (372)	470 (347)	126	259	**1FW6150-0■B07-2J■3**	14.2 (1.3)	33.5 (73.9)
		444 (327)	230	449	**1FW6150-0■B07-4F■3**		
1420 (1047)	720 (531)	688 (507)	75.9	171	**1FW6150-0■B10-2J■3**	20.9 (1.8)	47.5 (104.7)
		663 (489)	152	301	**1FW6150-0■B10-4F■3**		
2130 (1571)	1080 (797)	1050 (774)	33.1	103	**1FW6150-0■B15-2J■3**	31.3 (2.8)	70.8 (156.1)
		1030 (760)	89.1	188	**1FW6150-0■B15-4F■3**		

Cable outlet only for 1FW6090/1FW6130/1FW6150: Axial Radially outwards Tangential	 **P** **Q** **N**
Type of connection: Permanently connected power and signal cables with exposed core ends [4)] Length: 2 m (6.56 ft) Permanently connected power and signal cables pre-assembled with connectors Length: 0.5 m (1.64 ft)	 **C** **D**

For footnotes, see next page.

© Siemens 2022

Motor type (repeated)	Stall current [1] [3]	Rated current [2] [3]	Maximum current [2]	Calculated power	SINAMICS S120 Motor Module [5]		Power cable with complete shield Motor connection via power connector [4]		
					Required rated current	**Booksize format** Internal air cooling For further components, see SINAMICS S120 drive system	Power connector	Cable cross-section [6]	Pre-assembled basic cable to drive system
	I_0	I_{rated}	I_{max}	$P_{el, max}$	I_{rated} / I_{max}				
	A	A	A	kW (hp)	A	Article No.	Size	mm²	Article No.
Water cooling									
1FW6090-0.B05-0F..	5.9	5.6	9.5	6.66 (8.93)	5/15	**6SL3120-■TE15-0AD0**	1	4 × 2.5	**6FX8002-5CS16-....**
1FW6090-0.B05-0K..	8.2	7.5	13	8.23 (11.04)	9/27	**6SL3120-■TE21-0AD0**	1	4 × 2.5	**6FX8002-5CS16-....**
1FW6090-0.B07-0K..	10	9.5	16	10.4 (13.9)	9/27	**6SL3120-■TE21-0AD0**	1	4 × 2.5	**6FX8002-5CS16-....**
1FW6090-0.B07-1J..	16	14	26	14.3 (19.2)	18/36	**6SL3120-■TE21-8AC0**	1	4 × 2.5	**6FX8002-5CS16-....**
1FW6090-0.B10-0K..	8.2	8.0	13	9.64 (12.93)	9/27	**6SL3120-■TE21-0AD0**	1	4 × 2.5	**6FX8002-5CS16-....**
1FW6090-0.B10-1J..	16	15	27	15.5 (20.8)	18/36	**6SL3120-■TE21-8AC0**	1	4 × 2.5	**6FX8002-5CS16-....**
1FW6090-0.B15-1J..	16	15	27	17.3 (23.2)	18/36	**6SL3120-■TE21-8AC0**	1	4 × 2.5	**6FX8002-5CS16-....**
1FW6090-0.B15-2J..	27	24	43	24.4 (32.7)	30/56	**6SL3120-1TE23-0AC0**	1.5	4 × 4	**6FX8002-5CS46-....**
1FW6130-0.B05-0K..	9.7	9.1	18	12.5 (16.8)	9/27	**6SL3120-■TE21-0AD0**	1	4 × 2.5	**6FX8002-5CS16-....**
1FW6130-0.B05-1J..	17	14	32	18.7 (25.1)	18/36	**6SL3120-■TE21-8AC0**	1	4 × 2.5	**6FX8002-5CS16-....**
1FW6130-0.B07-0K..	11	10	20	14.5 (19.4)	18/36	**6SL3120-■TE21-8AC0**	1	4 × 2.5	**6FX8002-5CS16-....**
1FW6130-0.B07-1J..	17	15	32	20.1 (27.0)	18/36	**6SL3120-■TE21-8AC0**	1	4 × 2.5	**6FX8002-5CS16-....**
1FW6130-0.B10-1J..	17	16	32	21.8 (29.2)	18/36	**6SL3120-■TE21-8AC0**	1	4 × 2.5	**6FX8002-5CS16-....**
1FW6130-0.B10-2J..	28	25	53	31.2 (41.8)	30/56	**6SL3120-1TE23-0AC0**	1.5	4 × 4	**6FX8002-5CS46-....**
1FW6130-0.B15-1J..	19	19	36	25.9 (34.7)	18/36	**6SL3120-■TE21-8AC0**	1	4 × 2.5	**6FX8002-5CS16-....**
1FW6130-0.B15-2J..	28	27	54	34.6 (46.4)	30/56	**6SL3120-1TE23-0AC0**	1.5	4 × 4	**6FX8002-5CS46-....**
1FW6150-0.B05-1J..	18	17	44	23.3 (31.2)	18/54	**6SL3120-■TE21-8AD0**	1	4 × 2.5	**6FX8002-5CS16-....**
1FW6150-0.B05-4F..	44	36	106	39.8 (53.4)	60/120	**6SL3120-1TE26-0AC0**	1.5	4 × 10	**6FX8002-5CS64-....**
1FW6150-0.B07-2J..	28	26	66	32.5 (43.6)	30/90	**6SL3120-■TE23-0AD0**	1.5	4 × 4	**6FX8002-5CS46-....**
1FW6150-0.B07-4F..	44	39	106	43.2 (57.9)	60/120	**6SL3120-1TE26-0AC0**	1.5	4 × 10	**6FX8002-5CS64-....**
1FW6150-0.B10-2J..	28	26	66	36.9 (49.5)	30/90	**6SL3120-■TE23-0AD0**	1.5	4 × 4	**6FX8002-5CS46-....**
1FW6150-0.B10-4F..	44	40	106	47.9 (64.2)	60/120	**6SL3120-1TE26-0AC0**	1.5	4 × 10	**6FX8002-5CS64-....**
1FW6150-0.B15-2J..	28	27	66	43.2 (57.9)	30/90	**6SL3120-■TE23-0AD0**	1.5	4 × 4	**6FX8002-5CS46-....**
1FW6150-0.B15-4F..	44	41	106	55.3 (74.2)	60/120	**6SL3120-1TE26-0AC0**	1.5	4 × 10	**6FX8002-5CS64-....**

Motor Module:	
Single Motor Module	**1**
Double Motor Module	**2**

Length code	**....**

For information on the cables, refer to MOTION-CONNECT connection systems

[1] Torque and current at low speeds.
[2] The values refer to a supply voltage of 400 V 3 AC ±10% (drive system DC link voltage 600 V DC).
[3] In case of water cooling with inlet temperature of 35 °C (95 °F) and maximum rotor flange temperature of 60 °C (140 °F).
[4] For type of connection with exposed core ends, power and signal connectors are not included in the scope of supply of the motor and must be ordered separately.
[5] Optimized selection for full performance of torque motors.
[6] The current carrying capacity of the power cables complies with EN 60204-1 for installation type C, for continuous duty at an ambient air temperature of 40 °C (104 °F).

© Siemens 2022

SIMOTICS T-1FW6 Standard built-in torque motors

Selection and ordering data

Maximum torque	Static torque [1) 3)]	Rated torque [2) 3)]	Speed at maximum torque, max. [2)]	Rated speed [2)]	**SIMOTICS T-1FW6 Standard built-in torque motors**	Moment of inertia rotor	Weight, approx. stator + rotor
M_{max}	M_0	M_{rated}	n_{max} at M_{max}	n_{rated}		J	m
Nm (lb$_f$-ft)	Nm (lb$_f$-ft)	Nm (lb$_f$-ft)	rpm	rpm	Article No.	10^{-2}kgm^2 (lb$_f$-in-s^2)	kg (lb)
Water cooling							
716 (528)	467 (344)	432 (319)	80.6	140	**1FW6160-0■B05-1J■3**	19.0 (1.68)	36.3 (80.0)
		405 (299)	142	242	**1FW6160-0■B05-2J■3**		
		317 (234)	308	574	**1FW6160-0■B05-5G■3**		
1000 (738)	653 (482)	621 (458)	51.7	93.5	**1FW6160-0■B07-1J■3**	25.8 (2.28)	48.3 (106)
		596 (440)	97.2	164	**1FW6160-0■B07-2J■3**		
		517 (381)	218	379	**1FW6160-0■B07-5G■3**		
		436 (322)	320	594	**1FW6160-0■B07-8FB3**		
1430 (1055)	933 (688)	904 (667)	28.5	59	**1FW6160-0■B10-1J■3**	36.0 (3.19)	66.3 (146)
		880 (649)	62.4	108	**1FW6160-0■B10-2J■3**		
		807 (595)	149	250	**1FW6160-0■B10-5G■3**		
		737 (544)	221	383	**1FW6160-0■B10-8FB3**		
		629 (464)	317	584	**1FW6160-0■B10-2PB3**		67.4 (149)
2150 (1586)	1400 (1033)	1350 (996)	33.8	64.6	**1FW6160-0■B15-2J■3**	53.1 (4.70)	95.3 (210)
		1280 (944)	93.8	156	**1FW6160-0■B15-5G■3**		
		1220 (900)	142	237	**1FW6160-0■B15-8FB3**		
		1130 (833)	208	355	**1FW6160-0■B15-2PB3**		96.4 (213)
		970 (715)	304	551	**1FW6160-0■B15-0WB3**		
2860 (2110)	1870 (1379)	1760 (1298)	65.5	111	**1FW6160-0■B20-5G■3**	70.1 (6.20)	124.3 (274)
		1700 (1254)	103	170	**1FW6160-0■B20-8FB3**		
		1610 (1188)	152	253	**1FW6160-0■B20-2PB3**		125.4 (276)
		1470 (1084)	225	387	**1FW6160-0■B20-0WB3**		

Cable outlet only for 1FW6160 to 1FW6290: Axial Radially outwards Tangential (only for connection types C and D)	**W** **V** **T**
Type of connection: Permanently connected power and signal cables with exposed core ends [4)] Length: 2 m (6.56 ft) Permanently connected power and signal cables pre-assembled with connectors Length: 0.5 m (1.64 ft)	**C** **D**
Type of connection only for specific motors (not selectable)**:** Permanently connected power and signal cables with exposed core ends [4)] Length: 1 m (3.28 ft)	**B**

For footnotes, see next page.

© Siemens 2022

Motor type (repeated)	Stall current [1] [3]	Rated current [2] [3]	Maximum current [2]	Calculated power	SINAMICS S120 Motor Module [5]		Power cable with complete shield Motor connection via power connector [4]		
					Required rated current	**Booksize format** Internal air cooling For further components, see SINAMICS S120 drive system	Power connector	Cable cross-section [6]	Pre-assembled basic cable to drive system
	I_0	I_{rated}	I_{max}	$P_{el, max}$	I_{rated} / I_{max}		Size	mm²	
	A	A	A	kW (hp)	A	Article No.			Article No.
Water cooling									
1FW6160-0.B05-1J..	18	16	32	15.2 (20.4)	18/36	**6SL3120 - ■TE21-8AC0**	1	4 × 2.5	**6FX8002-5CS16-....**
1FW6160-0.B05-2J..	28	24	49	19.8 (26.6)	30/56	**6SL3120 - 1 TE23-0AC0**	1.5	4 × 4	**6FX8002-5CS46-....**
1FW6160-0.B05-5G..	56	37	99	32.4 (43.4)	60/120	**6SL3120 - 1 TE26-0AC0**	1.5	4 × 16	**6FX8002-5CS24-....**
1FW6160-0.B07-1J..	18	17	32	16.9 (22.7)	18/36	**6SL3120 - ■TE21-8AC0**	1	4 × 2.5	**6FX8002-5CS16-....**
1FW6160-0.B07-2J..	28	25	49	21.7 (29.1)	30/56	**6SL3120 - 1 TE23-0AC0**	1.5	4 × 4	**6FX8002-5CS46-....**
1FW6160-0.B07-5G..	56	44	99	34.5 (46.3)	60/120	**6SL3120 - 1 TE26-0AC0**	1.5	4 × 16	**6FX8002-5CS24-....**
1FW6160-0.B07-8FB.	80	52	141	45.5 (61.0)	85/141	**6SL3120 - 1 TE28-5AA3**	–	–	**–**
1FW6160-0.B10-1J..	18	17	32	19.2 (25.7)	18/36	**6SL3120 - ■TE21-8AC0**	1	4 × 2.5	**6FX8002-5CS16-....**
1FW6160-0.B10-2J..	28	26	49	24.4 (32.7)	30/56	**6SL3120 - 1 TE23-0AC0**	1.5	4 × 4	**6FX8002-5CS46-....**
1FW6160-0.B10-5G..	56	48	99	37.5 (50.3)	60/120	**6SL3120 - 1 TE26-0AC0**	1.5	4 × 16	**6FX8002-5CS24-....**
1FW6160-0.B10-8FB.	80	62	141	48.6 (65.2)	85/141	**6SL3120 - 1 TE28-5AA3**	–	–	**–**
1FW6160-0.B10-2PB.	112	74	198	62.8 (84.2)	132/210	**6SL3120 - 1 TE31-3AA3**	–	–	**–**
1FW6160-0.B15-2J..	28	27	49	28.4 (38.1)	30/56	**6SL3120 - 1 TE23-0AC0**	1.5	4 × 4	**6FX8002-5CS46-....**
1FW6160-0.B15-5G..	56	51	99	42.1 (56.5)	60/120	**6SL3120 - 1 TE26-0AC0**	1.5	4 × 16	**6FX8002-5CS24-....**
1FW6160-0.B15-8FB.	80	69	141	53.6 (71.9)	85/141	**6SL3120 - 1 TE28-5AA3**	–	–	**–**
1FW6160-0.B15-2PB.	112	89	198	67.8 (90.9)	132/210	**6SL3120 - 1 TE31-3AA3**	–	–	**–**
1FW6160-0.B15-0WB.	160	109	282	89.9 (120.6)	200/282	**6SL3120 - 1 TE32-0AA4**	–	–	**–**
1FW6160-0.B20-5G..	56	52	99	46.6 (62.5)	60/120	**6SL3120 - 1 TE26-0AC0**	1.5	4 × 16	**6FX8002-5CS24-....**
1FW6160-0.B20-8FB.	80	72	141	58.4 (78.3)	85/141	**6SL3120 - 1 TE28-5AA3**	–	–	**–**
1FW6160-0.B20-2PB.	112	96	198	72.6 (97.4)	132/210	**6SL3120 - 1 TE31-3AA3**	–	–	**–**
1FW6160-0.B20-0WB.	160	124	282	95 (127)	200/282	**6SL3120 - 1 TE32-0AA4**	–	–	**–**

Motor Module:	
Single Motor Module	**1**
Double Motor Module	**2**

Length code	**....**

For information on the cables, refer to MOTION-CONNECT connection systems

[1] Torque and current at low speeds.
[2] The values refer to a supply voltage of 400 V 3 AC ±10% (drive system DC link voltage 600 V DC).
[3] In case of water cooling with inlet temperature of 35 °C (95 °F) and maximum rotor flange temperature of 60 °C (140 °F).
[4] For type of connection with exposed core ends, power and signal connectors are not included in the scope of supply of the motor and must be ordered separately.
[5] Optimized selection for full performance of torque motors.
[6] The current carrying capacity of the power cables complies with EN 60204-1 for installation type C, for continuous duty at an ambient air temperature of 40 °C (104 °F).

© Siemens 2022

Selection and ordering data

Maximum torque	Static torque [1) 3)]	Rated torque [2) 3)]	Speed at maximum torque, max. [2)]	Rated speed [2)]	**SIMOTICS T-1FW6 Standard built-in torque motors**	Moment of inertia rotor	Weight, approx. stator + rotor
M_{max}	M_0	M_{rated}	n_{max} at M_{max}	n_{rated}		J	m
Nm (lb$_f$-ft)	Nm (lb$_f$-ft)	Nm (lb$_f$-ft)	rpm	rpm	Article No.	10^{-2}kgm^2 (lb$_f$-in-s^2)	kg (lb)
Water cooling							
990 (730)	672 (496)	634 (468)	51.7	92.7	**1FW6190-0■B05-1J■3**	35.8 (3.17)	42.8 (94.4)
		608 (448)	91	155	**1FW6190-0■B05-2J■3**		
		516 (381)	204	364	**1FW6190-0■B05-5G■3**		
1390 (1025)	941 (694)	907 (669)	31.2	61	**1FW6190-0■B07-1J■3**	48.6 (4.30)	55.8 (123)
		881 (650)	60.8	105	**1FW6190-0■B07-2J■3**		
		798 (589)	143	244	**1FW6190-0■B07-5G■3**		
		714 (527)	212	377	**1FW6190-0■B07-8FB3**		
1980 (1460)	1340 (988)	1310 (966)	14.2	37.2	**1FW6190-0■B10-1J■3**	67.8 (6.00)	75.8 (167)
		1290 (952)	37.1	67.6	**1FW6190-0■B10-2J■3**		
		1210 (892)	96.6	161	**1FW6190-0■B10-5G■3**		
		1140 (841)	145	246	**1FW6190-0■B10-8FB3**		
		971 (716)	238	431	**1FW6190-0■B10-2PB3**		77.1 (170)
2970 (2191)	2020 (1490)	1970 (1453)	16.9	39	**1FW6190-0■B15-2J■3**	99.8 (8.83)	107.8 (238)
		1890 (1394)	59.4	99.8	**1FW6190-0■B15-5G■3**		
		1830 (1350)	92.3	153	**1FW6190-0■B15-8FB3**		
		1680 (1239)	155	263	**1FW6190-0■B15-2PB3**		109.1 (241)
		1560 (1151)	201	352	**1FW6190-0■B15-0WB3**		
3960 (2921)	2690 (1984)	2580 (1903)	40.1	70.1	**1FW6190-0■B20-5G■3**	132.0 (11.7)	136.2 (300)
		2510 (1851)	65.4	109	**1FW6190-0■B20-8FB3**		
		2380 (1755)	113	188	**1FW6190-0■B20-2PB3**		137.5 (303)
		2270 (1674)	148	249	**1FW6190-0■B20-0WB3**		

Cable outlet only for 1FW6160 to 1FW6290: Axial Radially outwards Tangential (only for connection types C and D)	**W** **V** **T**
Type of connection: Permanently connected power and signal cables with exposed core ends [4)] Length: 2 m (6.56 ft) Permanently connected power and signal cables pre-assembled with connectors Length: 0.5 m (1.64 ft)	**C** **D**
Type of connection only for specific motors (not selectable)**:** Permanently connected power and signal cables with exposed core ends [4)] Length: 1 m (3.28 ft)	**B**

For footnotes, see next page.

© Siemens 2022

Motor type (repeated)	Stall current [1] [3]	Rated current [2] [3]	Maximum current [2]	Calculated power	SINAMICS S120 Motor Module [5]		Power cable with complete shield Motor connection via power connector [4]		
					Required rated current	**Booksize format** Internal air cooling For further components, see SINAMICS S120 drive system	Power connector	Cable cross-section [6]	Pre-assembled basic cable to drive system
	I_0	I_{rated}	I_{max}	$P_{el, max}$	I_{rated} / I_{max}		Size	mm²	
	A	A	A	kW (hp)	A	Article No.			Article No.
Water cooling									
1FW6190-0.B05-1J..	18	17	32	16.4 (22.0)	18/36	**6SL3120 - ■TE21-8AC0**	1	4 × 2.5	**6FX8002-5CS16-....**
1FW6190-0.B05-2J..	27	24	48	20.5 (27.5)	30/56	**6SL3120 - 1 TE23-0AC0**	1.5	4 × 4	**6FX8002-5CS46-....**
1FW6190-0.B05-5G..	55	41	95	32.2 (43.2)	60/120	**6SL3120 - 1 TE26-0AC0**	1.5	4 × 16	**6FX8002-5CS24-....**
1FW6190-0.B07-1J..	18	17	32	18.4 (24.7)	18/36	**6SL3120 - ■TE21-8AC0**	1	4 × 2.5	**6FX8002-5CS16-....**
1FW6190-0.B07-2J..	27	25	48	22.7 (30.4)	30/56	**6SL3120 - 1 TE23-0AC0**	1.5	4 × 4	**6FX8002-5CS46-....**
1FW6190-0.B07-5G..	55	45	95	34.6 (46.4)	60/120	**6SL3120 - 1 TE26-0AC0**	1.5	4 × 16	**6FX8002-5CS24-....**
1FW6190-0.B07-8FB.	78	57	136	45 (60.3)	85/141	**6SL3120 - 1 TE28-5AA3**	–	–	**–**
1FW6190-0.B10-1J..	18	18	32	21 (28.2)	18/36	**6SL3120 - ■TE21-8AC0**	1	4 × 2.5	**6FX8002-5CS16-....**
1FW6190-0.B10-2J..	27	26	48	25.8 (34.6)	30/56	**6SL3120 - 1 TE23-0AC0**	1.5	4 × 4	**6FX8002-5CS46-....**
1FW6190-0.B10-5G..	55	48	95	38.1 (51.1)	60/120	**6SL3120 - 1 TE26-0AC0**	1.5	4 × 16	**6FX8002-5CS24-....**
1FW6190-0.B10-8FB.	78	65	136	48.7 (65.3)	85/141	**6SL3120 - 1 TE28-5AA3**	–	–	**–**
1FW6190-0.B10-2PB.	123	86	214	67.7 (90.8)	132/210	**6SL3120 - 1 TE31-3AA3**	–	–	**–**
1FW6190-0.B15-2J..	27	26	48	30.4 (40.8)	30/56	**6SL3120 - 1 TE23-0AC0**	1.5	4 × 4	**6FX8002-5CS46-....**
1FW6190-0.B15-5G..	55	51	95	43.6 (58.5)	60/120	**6SL3120 - 1 TE26-0AC0**	1.5	4 × 16	**6FX8002-5CS24-....**
1FW6190-0.B15-8FB.	78	70	136	54.6 (73.2)	85/141	**6SL3120 - 1 TE28-5AA3**	–	–	**–**
1FW6190-0.B15-2PB.	123	100	214	73.7 (98.8)	132/210	**6SL3120 - 1 TE31-3AA3**	–	–	**–**
1FW6190-0.B15-0WB.	156	118	272	88.5 (119)	200/282	**6SL3120 - 1 TE32-0AA4**	–	–	**–**
1FW6190-0.B20-5G..	55	52	95	48.8 (65.4)	60/120	**6SL3120 - 1 TE26-0AC0**	1.5	4 × 16	**6FX8002-5CS24-....**
1FW6190-0.B20-8FB.	78	72	136	60.3 (80.9)	85/141	**6SL3120 - 1 TE28-5AA3**	–	–	**–**
1FW6190-0.B20-2PB.	123	107	214	79.5 (107)	132/210	**6SL3120 - 1 TE31-3AA3**	–	–	**–**
1FW6190-0.B20-0WB.	156	129	272	94.6 (127)	200/282	**6SL3120 - 1 TE32-0AA4**	–	–	**–**

Motor Module:	
Single Motor Module	**1**
Double Motor Module	**2**

Length code	**....**

For information on the cables, refer to MOTION-CONNECT connection systems

[1] Torque and current at low speeds.
[2] The values refer to a supply voltage of 400 V 3 AC ±10% (drive system DC link voltage 600 V DC).
[3] In case of water cooling with inlet temperature of 35 °C (95 °F) and maximum rotor flange temperature of 60 °C (140 °F).
[4] For type of connection with exposed core ends, power and signal connectors are not included in the scope of supply of the motor and must be ordered separately.
[5] Optimized selection for full performance of torque motors.
[6] The current carrying capacity of the power cables complies with EN 60204-1 for installation type C, for continuous duty at an ambient air temperature of 40 °C (104 °F).

© Siemens 2022

SIMOTICS T-1FW6 Standard built-in torque motors

Selection and ordering data

Maximum torque	Static torque [1) 3)]	Rated torque [2) 3)]	Speed at maximum torque, max. [2)]	Rated speed [2)]	**SIMOTICS T-1FW6 Standard built-in torque motors**	Moment of inertia rotor	Weight, approx. stator + rotor
M_{max}	M_0	M_{rated}	n_{max} at M_{max}	n_{rated}		J	m
Nm (lb$_f$-ft)	Nm (lb$_f$-ft)	Nm (lb$_f$-ft)	rpm	rpm	Article No.	10^{-2}kgm^2 (lb$_f$-in-s^2)	kg (lb)
Water cooling							
1320 (974)	841 (620)	801 (591)	32.6	66.1	**1FW6230-0■B05-1J■3**	62.2 (5.5)	44.8 (98.8)
		778 (574)	56	104	**1FW6230-0■B05-2J■3**		
		669 (493)	147	275	**1FW6230-0■B05-5G■3**		
1840 (1357)	1180 (870)	1140 (841)	18	43.2	**1FW6230-0■B07-1J■3**	84.3 (7.5)	58.8 (130)
		1120 (826)	35.9	69.8	**1FW6230-0■B07-2J■3**		
		1020 (752)	103	185	**1FW6230-0■B07-5G■3**		
		936 (690)	148	275	**1FW6230-0■B07-8FB3**		
2630 (1940)	1680 (1239)	1630 (1202)	19.8	44.4	**1FW6230-0■B10-2J■3**	118.0 (10.4)	81.8 (180)
		1530 (1129)	69.3	123	**1FW6230-0■B10-5G■3**		
		1460 (1077)	101	181	**1FW6230-0■B10-8FB3**		
		1330 (981)	150	278	**1FW6230-0■B10-2PB3**		
3950 (2914)	2520 (1859)	2450 (1807)	18.5	41.5	**1FW6230-0■B15-4C■3**	173.0 (15.3)	117.8 (260)
		2380 (1755)	41.8	76.2	**1FW6230-0■B15-5G■3**		
		2320 (1711)	64	113	**1FW6230-0■B15-8FB3**		
		2210 (1630)	97.1	172	**1FW6230-0■B15-2PB3**		
		2040 (1505)	141	258	**1FW6230-0■B15-0WB3**		119.4 (263)
5260 (3880)	3360 (2478)	3230 (2382)	27.5	53.4	**1FW6230-0■B20-5G■3**	228.0 (20.2)	153.8 (339)
		3170 (2338)	44.8	80.7	**1FW6230-0■B20-8FB3**		
		3060 (2257)	70	123	**1FW6230-0■B20-2PB3**		
		2910 (2146)	104	184	**1FW6230-0■B20-0WB3**		155.4 (343)

Cable outlet only for 1FW6160 to 1FW6290: Axial Radially outwards Tangential (only for connection types C and D)	**W** **V** **T**
Type of connection: Permanently connected power and signal cables with exposed core ends [4)] Length: 2 m (6.56 ft) Permanently connected power and signal cables pre-assembled with connectors Length: 0.5 m (1.64 ft)	**C** **D**
Type of connection only for specific motors (not selectable)**:** Permanently connected power and signal cables with exposed core ends [4)] Length: 1 m (3.28 ft)	**B**

For footnotes, see next page.

© Siemens 2022

Motor type (repeated)	Stall current [1] [3]	Rated current [2] [3]	Maximum current [2]	Calculated power	**SINAMICS S120 Motor Module [5]** Required rated current	**Booksize format** Internal air cooling For further components, see SINAMICS S120 drive system	**Power cable with complete shield** Motor connection via power connector [4] Power connector	Cable cross-section [6]	Pre-assembled basic cable to drive system
	I_0	I_{rated}	I_{max}	$P_{el, max}$	I_{rated} / I_{max}		Size	mm^2	
	A	A	A	kW (hp)	A	Article No.			Article No.
Water cooling									
1FW6230-0.B05-1J..	17	16	32	17.4 (23.3)	18/36	**6SL3120 - ■TE21-8AC0**	1	4 × 2.5	**6FX8002-5CS16-....**
1FW6230-0.B05-2J..	24	22	45	21.1 (28.3)	24/48	**6SL3120 - 1 TE22-4AC0**	1.5	4 × 4	**6FX8002-5CS46-....**
1FW6230-0.B05-5G..	53	41	101	33.1 (44.4)	60/120	**6SL3120 - 1 TE26-0AC0**	1.5	4 × 16	**6FX8002-5CS24-....**
1FW6230-0.B07-1J..	17	16	32	19.7 (26.4)	18/36	**6SL3120 - ■TE21-8AC0**	1	4 × 2.5	**6FX8002-5CS16-....**
1FW6230-0.B07-2J..	24	23	45	23.7 (31.8)	24/48	**6SL3120 - 1 TE22-4AC0**	1.5	4 × 4	**6FX8002-5CS46-....**
1FW6230-0.B07-5G..	53	45	101	36.3 (48.7)	60/120	**6SL3120 - 1 TE26-0AC0**	1.5	4 × 16	**6FX8002-5CS24-....**
1FW6230-0.B07-8FB.	74	57	139	45.1 (60.5)	85/141	**6SL3120 - 1 TE28-5AA3**	–	–	**–**
1FW6230-0.B10-2J..	24	23	45	27.3 (36.6)	24/48	**6SL3120 - 1 TE22-4AC0**	1.5	4 × 4	**6FX8002-5CS46-....**
1FW6230-0.B10-5G..	53	48	101	40.5 (54.3)	60/120	**6SL3120 - 1 TE26-0AC0**	1.5	4 × 16	**6FX8002-5CS24-....**
1FW6230-0.B10-8FB.	74	63	139	49.5 (66.4)	85/141	**6SL3120 - 1 TE28-5AA3**	–	–	**–**
1FW6230-0.B10-2PB.	106	81	199	63.5 (85.2)	132/210	**6SL3120 - 1 TE31-3AA3**	–	–	**–**
1FW6230-0.B15-4C..	34	33	64	38.3 (51.4)	45/90	**6SL3120 - 1 TE24-5AC0**	1.5	4 × 6	**6FX8002-5CS54-....**
1FW6230-0.B15-5G..	53	50	101	47.1 (63.2)	60/120	**6SL3120 - 1 TE26-0AC0**	1.5	4 × 16	**6FX8002-5CS24-....**
1FW6230-0.B15-8FB.	74	67	139	56.4 (75.6)	85/141	**6SL3120 - 1 TE28-5AA3**	–	–	**–**
1FW6230-0.B15-2PB.	106	91	199	70.8 (94.9)	132/210	**6SL3120 - 1 TE31-3AA3**	–	–	**–**
1FW6230-0.B15-0WB.	148	117	279	88.3 (118)	200/282	**6SL3120 - 1 TE32-0AA4**	–	–	**–**
1FW6230-0.B20-5G..	53	51	101	53.3 (71.5)	60/120	**6SL3120 - 1 TE26-0AC0**	1.5	4 × 16	**6FX8002-5CS24-....**
1FW6230-0.B20-8FB.	74	69	139	63 (84.5)	85/141	**6SL3120 - 1 TE28-5AA3**	–	–	**–**
1FW6230-0.B20-2PB.	106	95	199	77.9 (104)	132/210	**6SL3120 - 1 TE31-3AA3**	–	–	**–**
1FW6230-0.B20-0WB.	148	126	279	95.5 (128)	200/282	**6SL3120 - 1 TE32-0AA4**	–	–	**–**

Motor Module:	
Single Motor Module	**1**
Double Motor Module	**2**

Length code	**....**

For information on the cables, refer to MOTION-CONNECT connection systems

[1] Torque and current at low speeds.
[2] The values refer to a supply voltage of 400 V 3 AC ±10% (drive system DC link voltage 600 V DC).
[3] In case of water cooling with inlet temperature of 35 °C (95 °F) and maximum rotor flange temperature of 60 °C (140 °F).
[4] For type of connection with exposed core ends, power and signal connectors are not included in the scope of supply of the motor and must be ordered separately.
[5] Optimized selection for full performance of torque motors.
[6] The current carrying capacity of the power cables complies with EN 60204-1 for installation type C, for continuous duty at an ambient air temperature of 40 °C (104 °F).

© Siemens 2022

Selection and ordering data

Maximum torque	Static torque [1) 3)]	Rated torque [2) 3)]	Speed at maximum torque, max. [2)]	Rated speed [2)]	**SIMOTICS T-1FW6 Standard built-in torque motors**	Moment of inertia rotor	Weight, approx. stator + rotor
M_{max}	M_0	M_{rated}	n_{max} at M_{max}	n_{rated}		J	m
Nm (lb_f-ft)	Nm (lb_f-ft)	Nm (lb_f-ft)	rpm	rpm	Article No.	10^{-2}kgm^2 (lb_f-in-s^2)	kg (lb)
Water cooling							
4000 (2950)	2220 (1637)	2060 (1519)	57.5	106	**1FW6290-0■B07-5G■3**	228 (20.18)	103.6 (228)
		1920 (1416)	110	204	**1FW6290-0■B07-0L B3**		
		1810 (1335)	144	272	**1FW6290-0■B07-2P B3**		108.8 (240)
6280 (4632)	3490 (2574)	3320 (2449)	39.3	72.9	**1FW6290-0■B11-7A■3**	334 (29.56)	159 (351)
		3200 (2360)	68.6	125	**1FW6290-0■B11-0L B3**		
		3110 (2294)	90.4	165	**1FW6290-0■B11-2P B3**		164.2 (362)
8570 (6321)	4760 (3511)	4600 (3393)	26.6	51.3	**1FW6290-0■B15-7A■3**	440 (38.94)	214.6 (473)
		4480 (3304)	48.7	88.5	**1FW6290-0■B15-0L B3**		
		4390 (3238)	64.9	117	**1FW6290-0■B15-2P B3**		219.8 (485)
10900 (8040)	6030 (4448)	5760 (4249)	36.9	67.9	**1FW6290-0■B20-0L B3**	546 (48.32)	260.6 (575)
		5670 (4182)	49.9	90.3	**1FW6290-0■B20-2P B3**		265.8 (586)

Cable outlet only for 1FW6160 to 1FW6290: Axial Radially outwards Tangential (only for connection types C and D)	**W** **V** **T**
Type of connection: Permanently connected power and signal cables with exposed core ends [4)] Length: 2 m (6.56 ft) Permanently connected power and signal cables pre-assembled with connectors Length: 0.5 m (1.64 ft)	**C** **D**
Type of connection only for specific motors (not selectable)**:** Permanently connected power and signal cables with exposed core ends [4)] Length: 1 m (3.28 ft)	**B**

For footnotes, see next page.

© Siemens 2022

Motor type (repeated)	Stall current [1] [3]	Rated current [2] [3]	Maximum current [2]	Calculated power	SINAMICS S120 Motor Module [5]		Power cable with complete shield Motor connection via power connector [4]		
					Required rated current	**Booksize format** Internal air cooling For further components, see SINAMICS S120 drive system	Power connector	Cable cross-section [6]	Pre-assembled basic cable to drive system
	I_0	I_{rated}	I_{max}	$P_{el, max}$	I_{rated} / I_{max}		Size	mm²	
	A	A	A	kW (hp)	A	Article No.			Article No.
Water cooling									
1FW6290-0.B07-5G..	56	52	119	46.9 (62.9)	60/120	**6SL3120-1TE26-0AC0**	1.5	4 × 16	**6FX8002-5CS24-....**
1FW6290-0.B07-0LB.	101	86	212	68.9 (92.4)	132/210	**6SL3120-1TE31-3AA3**	–	–	**–**
1FW6290-0.B07-2PB.	129	105	272	83.2 (11")	200/282	**6SL3120-1TE32-0AA4**	–	–	**–**
1FW6290-0.B11-7A..	63	60	133	57.3 (76.8)	85/141	**6SL3120-1TE28-5AA3**	1.5	4 × 16	**6FX8002-5CS24-....**
1FW6290-0.B11-0LB.	101	92	212	76.6 (103)	132/210	**6SL3120-1TE31-3AA3**	–	–	**–**
1FW6290-0.B11-2PB.	129	114	272	91.2 (122)	200/282	**6SL3120-1TE32-0AA4**	–	–	**–**
1FW6290-0.B15-7A..	63	61	133	64 (86)	85/141	**6SL3120-1TE28-5AA3**	1.5	4 × 16	**6FX8002-5CS24-....**
1FW6290-0.B15-0LB.	101	94	212	83.8 (112)	132/210	**6SL3120-1TE31-3AA3**	–	–	**–**
1FW6290-0.B15-2PB.	129	118	272	98.8 (132)	200/282	**6SL3120-1TE32-0AA4**	–	–	**–**
1FW6290-0.B20-0LB.	101	96	212	90.8 (122)	132/210	**6SL3120-1TE31-3AA3**	–	–	**–**
1FW6290-0.B20-2PB.	129	121	272	106 (142)	200/282	**6SL3120-1TE32-0AA4**	–	–	**–**

Motor Module: Single Motor Module	**1**

Length code	**....**

For information on the cables, refer to MOTION-CONNECT connection systems

Accessories

Description	Article No.
Cooling connection adapter For SIMOTICS T-1FW6 built-in torque motors	
• 1FW6160 ... 1FW6230	**1FW6160-1BA00-0AA0**
• 1FW6290	**1FW6290-1BA00-0AA0**

Description	Article No.
Power connector [4] For SIMOTICS T-1FW6 built-in torque motors	
• Size 1 for 4 × 2.5 mm²	**6FX2003-0LA00**
• Size 1.5 for 4 × 4/4 × 10/4 × 16 mm²	**6FX2003-0LA10**
Signal connector [4] For SIMOTICS T-1FW6 built-in torque motors	
• M17 (socket) for 6 × 0.5 + 1 × 1.0 mm²	**6FX2003-0SU07**
Signal cable, pre-assembled [7] For SIMOTICS T-1FW6 built-in torque motors	**6FX8002-2SL10-....**

[1] Torque and current at low speeds.
[2] The values refer to a supply voltage of 400 V 3 AC ±10% (drive system DC link voltage 600 V DC).
[3] In case of water cooling with inlet temperature of 35 °C (95 °F) and maximum rotor flange temperature of 60 °C (140 °F).
[4] For type of connection with exposed core ends, power and signal connectors are not included in the scope of supply of the motor and must be ordered separately.
[5] Optimized selection for full performance of torque motors.
[6] The current carrying capacity of the power cables complies with EN 60204-1 for installation type C, for continuous duty at an ambient air temperature of 40 °C (104 °F).
[7] For length code, see MOTION-CONNECT connection systems.

© Siemens 2022

Selection and ordering data

Maximum torque	Static torque [1) 3)]	Rated torque [2) 3)]	Speed at maximum torque, max. [2)]	Rated speed [2)]	Maximum speed	**SIMOTICS T-1FW6 High Speed built-in torque motors**	Moment of inertia rotor	Weight, approx. stator + rotor
M_{max}	M_0	M_{rated}	n_{max} at M_{max}	n_{rated}	n_{max}		J	m
Nm (lb_f-ft)	Nm (lb_f-ft)	Nm (lb_f-ft)	rpm	rpm	rpm	Article No.	10^{-2}kgm^2 (lb_f-in-s^2)	kg (lb)
Water cooling								
214 (158)	157 (116)	153 (113)	434	571	1890	**1FW6092-2PC05-2EB3**	3.68 (0.326)	15.5 (34.2)
	157 (116)	150 (111)	814	1040	3000	**1FW6092-2PC05-4FB3**		
429 (316)	313 (231)	305 (225)	457	590	1890	**1FW6092-2PC10-4FB3**	6.89 (0.610)	26 (57.3)
	313 (231)	299 (221)	837	1060	3000	**1FW6092-2PC10-8FB3**		26.5 (58.4)
643 (474)	470 (347)	459 (339)	434	560	1790	**1FW6092-2PC15-6AB3**	10.1 (0.894)	37 (81.6)
	470 (347)	453 (334)	647	824	2520	**1FW6092-2PC15-8FB3**		
432 (319)	276 (204)	268 (198)	332	490	1730	**1FW6132-2PC05-3AB3**	11.8 (1.044)	28.5 (62.8)
	276 (204)	260 (192)	723	1050	3000	**1FW6132-2PC05-6AB3**		
864 (637)	552 (407)	537 (396)	344	500	1730	**1FW6132-2PC10-6AB3**	21.3 (1.885)	48.5 (107)
	552 (407)	519 (383)	735	1060	3000	**1FW6132-2PC10-2PB3**		49 (108)
1300 (959)	829 (611)	811 (598)	249	365	1290	**1FW6132-2PC15-6AB3**	30.8 (2.726)	67 (148)
	829 (611)	792 (584)	544	777	2400	**1FW6132-2PC15-2PB3**		67.5 (149)
800 (590)	545 (402)	536 (395)	121	203	890	**1FW6152-2PC05-3AB3**	29.2 (2.584)	41 (90.4)
	545 (402)	525 (387)	296	460	1800	**1FW6152-2PC05-6AB3**		
1600 (1180)	1090 (804)	1070 (789)	134	216	902	**1FW6152-2PC10-6AB3**	45.4 (4.018)	69.5 (153)
	1090 (804)	1050 (774)	303	467	1800	**1FW6152-2PC10-2PB3**		70 (154)
2400 (1770)	1630 (1202)	1610 (1188)	133	213	890	**1FW6152-2PC15-8FB3**	65.8 (5.824)	97.5 (215)
	1630 (1202)	1590 (1173)	222	343	1350	**1FW6152-2PC15-2PB3**		98 (216)

Type of connection only for specific motors (not selectable)**:** Permanently connected power and signal cables with exposed core ends [4)] Length: 1 m (3.28 ft)	**B**

For footnotes, see next page.

© Siemens 2022

Motor type (repeated)	Stall current 1) 3)	Rated current 2) 3)	Maximum current 2)	Calculated power	Voltage Protection Module (VPM)	**SINAMICS S120 Motor Module 5)**	
						Required rated current	**Booksize format** Internal air cooling For further components, see SINAMICS S120 drive system
	I_0	I_{rated}	I_{max}	$P_{el, max}$		I_{rated} / I_{max}	
	A	A	A	kW (hp)		A	Article No.
Water cooling							
1FW6092-2PC05-2EB3	19.6	19	30.1	15.8 (21.2)	VPM 120	24/48	**6SL3120-1TE22-4AC0**
1FW6092-2PC05-4FB3	33	31.3	50.8	24.2 (32.5)	VPM120	45/90 4)	**6SL3120-1TE24-5AC0**
1FW6092-2PC10-4FB3	39.1	38	60.2	30.5 (40.9)	VPM120	45/90	**6SL3120-1TE24-5AC0**
1FW6092-2PC10-8FB3	66	62.5	102	47.5 (63.7)	VPM200	85/141 4)	**6SL3120-1TE28-5AA3**
1FW6092-2PC15-6AB3	55.6	54	85.5	43.3 (58.1)	VPM120	60/120	**6SL3120-1TE26-0AC0**
1FW6092-2PC15-8FB3	78.2	75	120	57.7 (77.4)	VPM200	85/141 4)	**6SL3120-1TE28-5AA3**
1FW6132-2PC05-3AB3	28.1	27.2	52.9	23.6 (31.6)	VPM120	30/56	**6SL3120-1TE23-0AC0**
1FW6132-2PC05-6AB3	56.2	52.3	106	41.2 (55.2)	VPM120	85/141 4)	**6SL3120-1TE28-5AA3**
1FW6132-2PC10-6AB3	56.2	54.3	106	45.1 (60.5)	VPM120	60/120	**6SL3120-1TE26-0AC0**
1FW6132-2PC10-2PB3	112	104	211	80.4 (108)	VPM200	132/210 4)	**6SL3120-1TE31-3AA3**
1FW6132-2PC15-6AB3	62.9	61.3	118	53.2 (71.3)	VPM120	60/120	**6SL3120-1TE26-0AC0**
1FW6132-2PC15-2PB3	126	119	237	93.2 (125)	VPM200	132/210 4)	**6SL3120-1TE31-3AA3**
1FW6152-2PC05-3AB3	27.1	26.6	53	25.3 (33.9)	VPM120	30/56	**6SL3120-1TE23-0AC0**
1FW6152-2PC05-6AB3	55	52.5	107	39.1 (52.4)	VPM120	85/141 4)	**6SL3120-1TE28-5AA3**
1FW6152-2PC10-6AB3	55	53.8	107	46.2 (62.0)	VPM120	60/120	**6SL3120-1TE26-0AC0**
1FW6152-2PC10-2BP3	110	105	215	74.4 (99.8)	VPM200	132/210 4)5)	**6SL3120-1TE31-3AA3**
1FW6152-2PC15-8FB3	81.4	79.7	159	68.5 (91.9)	VPM200	85/141	**6SL3120-1TE28-5AA3**
1FW6152-2PC15-2PB3	123	119	241	88.8 (119)	VPM200	132/210 5)	**6SL3120-1TE31-3AA3**

Motor Module: Single Motor Module	**1**

1) Torque and current at low speeds.
2) The values refer to a supply voltage of 400 V 3 AC ±10% (drive system DC link voltage 600 V DC).
3) In case of water cooling with inlet temperature of 20 °C (68 °F) and maximum rotor flange temperature of 60 °C (140 °F).
4) PWM clock cycle must be increased.
5) Dimensioning for motor continuous current, for full utilization of motor I_{max}, a larger Motor Module is required.

© Siemens 2022

Selection and ordering data

Maximum torque	Static torque [1) 3)]	Rated torque [2) 3)]	Speed at maximum torque, max. [2)]	Rated speed [2)]	Maximum speed	**SIMOTICS T-1FW6 High Speed built-in torque motors**	Moment of inertia rotor	Weight, approx. stator + rotor
M_{max}	M_0	M_{rated}	n_{max} at M_{max}	n_{rated}	n_{max}		J	m
Nm (lb_f-ft)	Nm (lb_f-ft)	Nm (lb_f-ft)	rpm	rpm	rpm	Article No.	10^{-2}kgm^2 (lb_f-in-s^2)	kg (lb)
Water cooling								
1180 (870)	868 (640)	849 (626)	138	196	893	**1FW6192-2 ■ C05-4FB3**	70.3 (6.22)	62.5 (138)
	868 (640)	826 (609)	300	423	1500	**1FW6192-2 ■ C05-8FB3**		
2350 (1733)	1740 (1283)	1700 (1254)	142	200	893	**1FW6192-2 ■ C10-8FB3**	125 (11.06)	101.5 (224)
	1740 (1283)	1670 (1232)	235	329	1410	**1FW6192-2 ■ C10-2FB3**		104 (229)
3530 (2604)	2600 (1918)	2570 (1896)	89.9	128	596	**1FW6192-2 ■ C15-8FB3**	181 (16.02)	141.5 (312)
	2600 (1918)	2520 (1859)	198	277	1190	**1FW6192-2 ■ C15-0WB3**		144 (318)
4700 (3467)	3470 (2559)	3440 (2537)	63	92	447	**1FW6192-2 ■ C20-8FB3**	237 (20.98)	181 (399)
	3470 (2559)	3390 (2500)	145	203	893	**1FW6192-2 ■ C20-0WB3**		183.5 (405)
1490 (1099)	1090 (804)	1060 (782)	156	227	943	**1FW6232-2 ■ C05-6AB3**	167 (14.78)	75 (165)
	1090 (804)	1040 (767)	224	326	1300	**1FW6232-2 ■ C05-8FB3**		
2990 (2205)	2180 (1608)	2120 (1564)	159	230	934	**1FW6232-2 ■ C10-2PB3**	227 (20.09)	121 (267)
	2180 (1608)	2090 (1542)	230	331	1300	**1FW6232-2 ■ C10-0WB3**		123.5 (272)
4480 (3304)	3280 (2419)	3210 (2368)	102	148	623	**1FW6232-2 ■ C15-2PB3**	327 (28.94)	169 (373)
	3280 (2419)	3180 (2346)	150	215	872	**1FW6232-2 ■ C15-0WB3**		171.5 (378)
5980 (4411)	4370 (3223)	4310 (3179)	73.1	108	467	**1FW6232-2 ■ C20-2PB3**	427 (37.79)	216.5 (477)
	4370 (3223)	4280 (3157)	109	158	654	**1FW6232-2 ■ C20-0WB3**		219 (483)

Cable outlet only for 1FW6192 to 1FW6232: Axial Radially outwards	**W** **V**

Type of connection only for specific motors (not selectable)**:** Permanently connected power and signal cables with exposed core ends [4)] Length: 1 m (3.28 ft)	**B**

For footnotes, see next page.

© Siemens 2022

Motor type (repeated)	Stall current 1) 3)	Rated current 2) 3)	Maximum current 2)	Calculated power	Voltage Protection Module (VPM)	**SINAMICS S120 Motor Module 5)**	
						Required rated current	**Booksize format** Internal air cooling For further components, see SINAMICS S120 drive system
	I_0	I_{rated}	I_{max}	$P_{el, max}$		I_{rated} / I_{max}	
	A	A	A	kW (hp)		A	Article No.
Water cooling							
1FW6192-2.C05-4FB3	41.5	40.3	68	28.2 (37.8)	VPM120	45/90	**6SL3120-1TE22-5AC0**
1FW6192-2.C05-8FB3	83	77.7	136	48.1 (64.5)	VPM120	85/141	**6SL3120-1TE28-5AA3**
1FW6192-2.C10-8FB3	83	80.5	136	53.3 (71.5)	VPM120	85/141	**6SL3120-1TE28-5AA3**
1FW6192-2.C10-2PB3	131	124	214	75.8 (102)	VPM200	132/210	**6SL3120-1TE31-3AA3**
1FW6192-2.C15-8FB3	83	81.4	136	58.6 (78.6)	VPM120	85/141	**6SL3120-1TE28-5AA3**
1FW6192-2.C15-0WB3	166	159	272	98.6 (132)	VPM200	200/282	**6SL3120-1TE32-0AA4**
1FW6192-2.C20-8FB3	83	81.9	136	63.8 (85.6)	VPM120	85/141	**6SL3120-1TE23-5AA3**
1FW6192-2.C20-0WB3	166	161	272	104 (139)	VPM200	200/282	**6SL3120-1TE32-0AA4**
1FW6232-2.C05-6AB3	59	56.6	100	37.2 (49.9)	VPM120	60/120	**6SL3120-1TE26-0AC0**
1FW6232-2.C05-8FB3	81.9	77.2	139	47.9 (64.2)	VPM120	85/141	**6SL3120-1TE28-5AA3**
1FW6232-2.C10-2PB3	117	112	199	71.5 (95.9)	VPM200	132/210	**6SL3120-1TE31-3AA3**
1FW6232-2.C10-0WB3	164	154	279	93 (125)	VPM200	200/282	**6SL3120-1TE32-0AA4**
1FW6232-2.C15-2PB3	117	114	199	78 (105)	VPM200	132/210	**6SL3120-1TE31-3AA3**
1FW6232-2.C15-0WB3	164	158	279	99.6 (134)	VPM200	200/282	**6SL3120-1TE32-0AA4**
1FW6232-2.C20-2PB3	117	115	199	84.6 (113)	VPM200	132/210	**6SL3120-1TE31-3AA3**
1FW6232-2.C20-0WB3	164	159	279	106 (142)	VPM200	200/282	**6SL3120-1TE32-0AA4**

Accessories

Description	Article No.
Cooling connection adapter For SIMOTICS T-1FW6 built-in torque motors	
• 1FW6192 ... 1FW6232	**1FW6160-1BA00-0AA0**

Description	Article No.
Signal connector 4) For SIMOTICS T-1FW6 built-in torque motors	
• M17 (socket) for 6 × 0.5 + 1 × 1.0 mm^2	**6FX2003-0SU07**
Signal cable, pre-assembled 6) For SIMOTICS T-1FW6 built-in torque motors	**6FX8002-2SL10-....**

1) Torque and current at low speeds.
2) The values refer to a supply voltage of 400 V 3 AC ±10% (drive system DC link voltage 600 V DC).
3) In case of water cooling with inlet temperature of 20 °C (68 °F) and maximum rotor flange temperature of 60 °C (140 °F).
4) For type of connection with exposed core ends, power and signal connectors are not included in the scope of supply of the motor and must be ordered separately.
5) Optimized selection for full performance of torque motors.
6) For length code, see MOTION-CONNECT connection systems.

© Siemens 2022

Overview

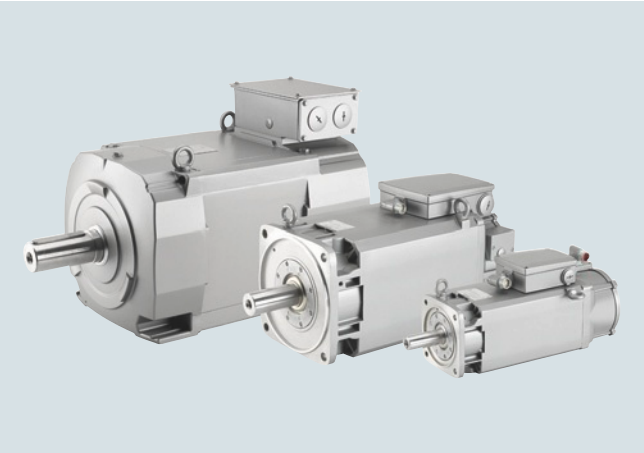

SIMOTICS M-1PH8 motors are compact asynchronous squirrel-cage motors with IP55/IP65 degree of protection. SIMOTICS M-1PH8 motors are available in two different cooling types:

- Forced ventilation
- Water cooling

The motors have been designed specifically for use in conjunction with the SINAMICS S120 drive system. Depending on the control requirements, appropriate encoder systems are available for the motors for sensing the motor speed and indirect position.

For machine tools, the encoder system is capable of C-axis operation as standard - i.e. an additional encoder is not required for C-axis operation.

Benefits

- Wide range of power ratings
- The right design for any application
  - Forced ventilation or water cooling
  - Solid or hollow shaft
  - Various bearing concepts
  - Different encoder types for speed control and high-precision positioning
- Outstanding performance properties
  - Maximum speeds up to 24000 rpm
  - Excellent rotational accuracy of up to 10 µm
  - Excellent vibration severity
  - High dynamic response (short ramp-up times)
- Low noise emissions
- Simple and flexible connection system
- Commissioning with electronic rating plate and DRIVE-CLiQ interface

Water cooling always brings benefits:

- With applications in which extreme ambient conditions, such as high temperatures, dust, dirt, or a corrosive atmosphere, do not permit air cooling
- In processes in which the environment must not be heated

© Siemens 2022

Application

- Compact machine tools
- Complex machining centers and turning machines
- Fully encapsulated milling machines
- High-load milling spindles
- Counterspindles or power tools for turning machines
- Direct power tools with internal cooling
- Special-purpose machines

Configuration

Ordering example

Selection criteria	Design	Structure of the Article No.
1PH8 motor	Shaft height 80 Version 2	**1PH8083- . . . . . - . . . 2**
	Asynchronous version without brake	**1PH8083-1 . . . . - . . . 2**
Encoder system	Incremental encoder sin/cos 1 V_{pp} 2048 S/R with C and D tracks (encoder IC2048S/R)	**1PH8083-1M . . .- . . . 2**
Cooling	Water cooling	**1PH8083-1 . . 2 . - . . . 2**
Rated speed	1750 rpm	**1PH8083-1MF . . - . . . 2**
Rated power	3.3 kW	
Type of construction	IM B3 (IM V5, IM V6)	**1PH8083-1MF20- . . . 2**
Shaft extension DE	Plain shaft	**1PH8083-1MF20-0 . . 2**
Bearing design	Standard Vibration severity R/A Shaft and flange accuracy R	**1PH8083-1MF20-0B . 2**
Connection	Power connection at top of terminal box Cable entry on the right Signal connection DE	**1PH8083-1MF20-0BA2**
Options		**1PH8083-1MF20-0BA2-Z**
	Additional PTC thermistor chain for alarm and tripping	**1PH8083-1MF20-0BA2-Z A12**
	Special paint finish, world-wide: Sky blue RAL 5015	**1PH8083-1MF20-0BA2-Z A12 K23 X05**

S/R = signals/revolution

Characteristic curves

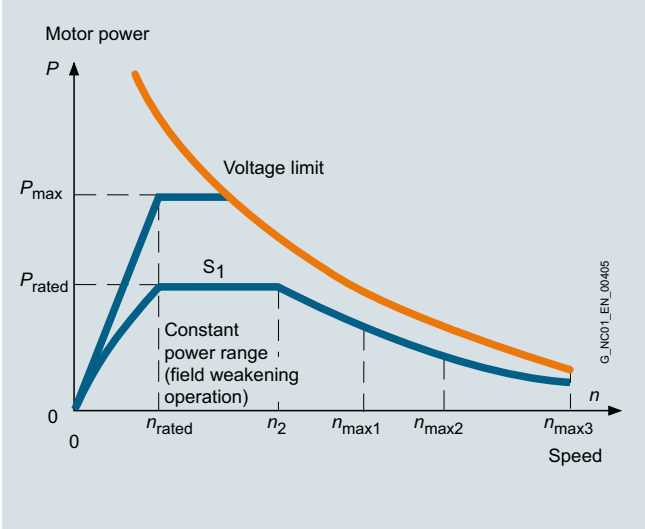

Typical speed/power graph for SIMOTICS M-1PH8 motors

The graph shows the typical relationship between motor speed and drive power for SIMOTICS M-1PH8 motors for duty type S1 (continuous duty) in accordance with IEC 60034-1.

Data for short-time duty S2 and continuous duty S6 is listed in the 1PH8 Motors Configuration Manual.

More information

For further configuration information, see the 1PH8 Motors Configuration Manual.

If you are using a Smart Line Module, proceed in accordance with the 1PH8 Motors Configuration Manual.

© Siemens 2022

Technical specifications

Product name	SIMOTICS M-1PH8		
Cooling	Forced ventilation	Water cooling	
• Cooling water pressure at inlet, max.	–	6 bar	
		Cooling water flow volume	Connecting thread at NDE[1]
- 1PH808	–	6 l/min (1.59 US gallons/min.)	G 1/8"
- 1PH810	–	8 l/min (2.11 US gallons/min.)	G 1/4"
- 1PH813	–	12 l/min (3.17 US gallons/min.)	G 3/8"
- 1PH816	–	15 l/min (3.96 US gallons/min.)	G 1/2"
- 1PH818	–	15 l/min (3.96 US gallons/min.)	G 3/8"
- 1PH822	–	20 l/min (5.28 US gallons/min.)	G 3/8"
- 1PH828	–	35 l/min (9.25 US gallons/min.)	G 1/2"
Ambient temperature, permissible	-15 ... +40 °C (5 ... 104 °F)		
Coolant inlet temperature	–	≤ 30 °C (86 °F)	
Temperature monitoring	Temperature sensor in stator winding		
• 1PH818/1PH822/1PH828	Additional temperature sensor as reserve		
Stator winding insulation in accordance with EN 60034-1 (IEC 60034-1)	For an ambient temperature of up to 40 °C (104°F) Temperature class 180 (H)	For a cooling water inlet temperature of up to 30 °C (86 °F) Temperature class 180 (H)	
Fan supply voltage		–	
• 1PH808	230 V 1 AC 50/60 Hz, 265 V 1 AC 60 Hz	–	
• 1PH810 to 1PH816	400 V 3 AC 50/60 Hz, 480 V 3 AC 60 Hz	–	
• 1PH818/1PH822	200 ... 277 V 1 AC, 50/60 Hz (EC fan) 380 V ... 480 V 3 AC 50/60 Hz (-5% / +10%) (EC fan) option L76	–	
• 1PH828	380 ... 480 V 3 AC, 50/60 Hz (EC fan)	–	
Encoder system, built-in	Without DRIVE-CLiQ interface or with DRIVE-CLiQ interface		
Sound pressure level L_{pA} (1 m) according to EN ISO 1680 max. tolerance + 3 dB			
• 1PH808 to 1PH813	70 dB at rated pulse frequency 4 kHz and speed range up to 5000 rpm	68 dB at rated pulse frequency 4 kHz and speed range up to 5000 rpm	
• 1PH816	73 dB at rated pulse frequency 4 kHz and speed range up to 5000 rpm	69 dB at rated pulse frequency 4 kHz and speed range up to 5000 rpm	
• 1PH818/1PH822	73 dB at rated pulse frequency 2 kHz and speed range: Forced ventilation (IP55) • 1PH818 up to 5000 rpm • 1PH822 up to 3500 rpm	70 dB at rated pulse frequency 2 kHz and speed ranges: • 1PH818 up to 5000 rpm • 1PH822 up to 3500 rpm	
• 1PH828	74 dB at rated pulse frequency 2 kHz and speed range up to 3300 rpm	72 dB at rated pulse frequency 2 kHz and speed range up to 3300 rpm	

[1] DE is the drive end with shaft. NDE is the non-drive end.

© Siemens 2022

Technical specifications

Product name	SIMOTICS M-1PH8	
Connection		
• 1PH808/1PH810/1PH813	Power connector or terminal box	
• 1PH816/1PH818/1PH822/1PH828	Terminal box	Terminal box
• Fan		
- 1PH808	Power connector	–
- 1PH810/1PH813	Power connector or terminal box	–
- 1PH816/1PH818/1PH822/1PH828	Terminal box	–
• Encoder system	Connector for signals (without mating connector) or DRIVE-CLiQ	
Vibration severity	In accordance with Siemens/EN 60034-14 (IEC 60034-14)[1]	
Shaft and flange accuracy in accordance with DIN 42955 (IEC 60072-1)[1]	Tolerance R	
Degree of protection in accordance with EN 60034-5 (IEC 60034-5)		
• 1PH808/1PH810/1PH813/1PH816	IP55	IP65
• 1PH818/1PH822/1PH828	IP55	IP55
• Fans	IP55, option L74: IP65[2]	–
Rating plate	1 unit attached to motor 1 supplied loose in terminal box	
Paint finish	Anthracite RAL 7016	
Certificate of suitability	cURus, CE, EAC	

[1] Concentricity of the shaft end, coaxiality of spigot and shaft, and axial runout of the mounting flanges to the axis of the shaft end.
[2] Only for 1PH808/1PH810/1PH813/1PH816.

© Siemens 2022

Selection and ordering data

Rated speed	Continuous speed, max.[1] With holding brake	Without holding brake			Operating speed during field weakening[1)5)]	Rated power	Rated torque	Static torque	**SIMOTICS M-1PH8 asynchronous motors**
n_{rated}	$n_{max, Br}$	n_{max1}[2)]	n_{max2}[3)]	n_{max3}[4)]	n_2	P_{rated}	M_{rated}	M_0	
rpm	rpm	rpm	rpm	rpm	rpm	kW (hp)	Nm (lb_f-ft)	Nm (lb_f-ft)	Article No.
Shaft height 80 – Forced ventilation – Line voltage 400 V 3 AC, operation on Active Line Module									
1750	5000	10000	12000	–	5200	3.3 (4.43)	18 (13.3)	21 (15.5)	**1PH8083-■■F■■-■■■1**
2300	5000	10000	15000	17000	10550	4.1 (5.50)	17 (12.5)	21 (15.5)	**1PH8083-■■G■■-■■■1**
3300	5000	10000	15000	20000	16500	4.5 (6.03)	13 (9.59)	21 (15.5)	**1PH8083-■■M■■-■■■1**
5000	–	10000	15000	20000	20000	5.3 (7.11)	10 (7.38)	19 (14.0)	**1PH8083-1■N■■-■■■1**
1750	5000	10000	14000	–	5850	4.3 (5.77)	23 (17.0)	27 (19.9)	**1PH8087-■■F■■-■■■1**
2300	5000	10000	15000	18000	9650	5.4 (7.24)	22 (16.2)	27 (19.9)	**1PH8087-■■G■■-■■■1**
3300	5000	10000	15000	20000	19400	5.2 (6.97)	15 (11.1)	27 (19.9)	**1PH8087-■■M■■-■■■1**
5000	–	10000	15000	20000	20000	6.5 (8.72)	12 (8.85)	25 (18.4)	**1PH8087-1■N■■-■■■1**
Shaft height 100 – Forced ventilation – Line voltage 400 V 3 AC, operation on Active Line Module									
1750	5000	9000	12000	–	5000	4.3 (5.77)	23 (17.0)	29 (21.4)	**1PH8101-■■F■■-■■■1**
1150	5000	9000	12000	–	2450	4.3 (5.77)	36 (26.6)	38 (28.0)	**1PH8103-■■D■■-■■■1**
1750	5000	9000	12000	–	4000	6.3 (8.45)	34 (25.1)	38 (28.0)	**1PH8103-■■F■■-■■■1**
2300	5000	9000	12000	–	6000	7.5 (10.06)	31 (22.9)	38 (28.0)	**1PH8103-■■G■■-■■■1**
3300	5000	9000	12000	18000	16000	9.3 (12.47)	27 (19.9)	38 (28.0)	**1PH8103-■■M■■-■■■1**
1750	5000	9000	12000	–	5900	8.0 (10.73)	44 (32.5)	52 (38.4)	**1PH8105-■■F■■-■■■1**
500	5000	7000	–	–	1500	3.2 (4.29)	61 (45)	62 (203)	**1PH8107-■■B■■-■■■1**
1150	5000	9000	12000	–	4750	7.2 (9.66)	60 (44.3)	63 (46.47)	**1PH8107-■■D■■-■■■1**
1750	5000	9000	12000	–	4600	10.0 (13.41)	55 (40.6)	63 (46.47)	**1PH8107-■■F■■-■■■1**
2300	5000	9000	12000	–	7500	12.0 (4.10)	50 (36.9)	63 (46.47)	**1PH8107-■■G■■-■■■1**
3300	5000	9000	12000	18000	18000	13.0 (17.43)	38 (28.0)	59 (43.5)	**1PH8107-■■M■■-■■■1**
Shaft height 132 – Forced ventilation – Line voltage 400 V 3 AC, operation on Active Line Module									
500	4500	6000	–	–	1500	3.6 (4.83)	69 (50.9)	76 (56.1)	**1PH8131-■■B■■-■■■1**
1750	4500	8000	10000	11000	5150	13.0 (17.43)	71 (52.4)	96 (70.8)	**1PH8131-■■F■■-■■■1**
500	4500	6000	–	–	1200	6.5 (8.72)	124 (91.5)	124 (91.5)	**1PH8133-■■B■■-■■■1**
1150	4500	8000	10000	–	3000	13.5 (18.10)	112 (82.6)	128 (94.4)	**1PH8133-■■D■■-■■■1**
1750	4500	8000	10000	13000	5000	17.5 (23.47)	96 (70.8)	126 (92.9)	**1PH8133-■■F■■-■■■1**
2300	4500	8000	10000	15000	6500	22.5 (30.7)	93 (68.6)	126 (92.9)	**1PH8133-■■G■■-■■■1**
500	4500	6000	–	–	1200	8.0 (10.73)	153 (113)	162 (11)	**1PH8135-■■B■■-■■■1**
1750	4500	8000	10000	14000	5500	21.5 (28.83)	118 (87.0)	157 (116)	**1PH8135-■■F■■-■■■1**
500	4500	6000	–	–	1400	8.6 (11.3)	165 (122)	171 (126)	**1PH8137-■■B■■-■■■1**
1150	4500	8000	10000	12000	4000	19.5 (26.15)	162 (11)	183 (135)	**1PH8137-■■D■■-■■■1**
1750	4500	8000	10000	15000	5000	22.0 (29.5)	140 (103)	172 (127)	**1PH8137-■■F■■-■■■1**
2300	4500	8000	10000	15000	5000	29.0 (38.89)	120 (88.5)	176 (130)	**1PH8137-■■G■■-■■■1**
Shaft height 160 – Forced ventilation – Line voltage 400 V 3 AC, operation on Active Line Module									
500	4000	6500	–	–	2200	12.0 (4.10)	229 (169)	253 (187)	**1PH8163-■■B■■-■■■1**
1150	4000	6500	9000	10000	3550	25.0 (33.53)	208 (153)	243 (179)	**1PH8163-■■D■■-■■■1**
1750	4000	6500	9000	10000	3050	34.0 (45.59)	186 (137)	252 (186)	**1PH8163-■■F■■-■■■1**
2300	4000	6500	9000	10000	3200	38.0 (50.96)	158 (117)	254 (187)	**1PH8163-■■G■■-■■■1**
500	4000	6500	–	–	1850	16.0 (21.46)	306 (226)	329 (243)	**1PH8165-■■B■■-■■■1**
1150	4000	6500	9000	10000	4850	31.0 (41.57)	257 (190)	302 (223)	**1PH8165-■■D■■-■■■1**
1750	4000	6500	9000	10000	2650	41.0 (54.98)	224 (165)	304 (224)	**1PH8165-■■F■■-■■■1**
2300	4000	6500	9000	10000	3000	44.0 (59)	183 (135)	302 (223)	**1PH8165-■■G■■-■■■1**

For versions, see Article No. supplements and options.

1) Speed data are based on an infeed with Active Line Module (see characteristic curves); the maximum speed of the encoders must be observed.
2) Bearing design for standard (14th data position is B to H); reduced values for type F, see 1PH8 Configuration Manual.
3) Bearing design for Performance (14th data position is L).
4) Bearing design for High Performance (14th data position is M).
5) n_2: max. permissible thermal speed at constant output or speed, which is at the voltage limit when $P = P_{rated}$.

© Siemens 2022

Motor type (repeated)	Efficiency	Moment of inertia without holding brake	Weight, approx.[6] without holding brake	Rated current	Stall current	Terminal box	SINAMICS S120 Motor Module: Rated output current[7]	SINAMICS S120 Motor Module: Booksize format, Internal air cooling. For further components, see SINAMICS S120 drive system
	η	J	m	I_{rated}	I_0		I_{rated}	
	%	kgm² (lbf-in-s²)	kg (lb)	A	A	Type	A	Article No.
1PH8083-..F...	83.1	0.0064 (0.06)	32 (70.6)	7.5	8	gk803	9	**6SL3120-■TE21-0AD0**
1PH8083-..G...	85.2			11.3	12	gk803	18	**6SL3120-■TE21-8A■0**
1PH8083-..M...	87.5			13.5	17	gk803	18	**6SL3120-■TE21-8A■0**
1PH8083-1.N...	87.0			17.0	23	gk803	18	**6SL3120-■TE21-8A■0**
1PH8087-..F...	83.8	0.0089 (0.08)	39 (86.0)	10.0	11	gk803	18	**6SL3120-■TE21-8A■0**
1PH8087-..G...	85.9			13.7	15	gk803	18	**6SL3120-■TE21-8A■0**
1PH8087-..M...	87.8			17.1	23	gk803	18	**6SL3120-■TE21-8A■0**
1PH8087-1.N...	87.8			19.5	28	gk803	30	**6SL3120-1TE23-0A■0**
1PH8101-..F...	85.2	0.0138 (0.12)	42 (92.6)	12.5	14	gk813	18	**6SL3120-■TE21-8A■0**
1PH8103-..D...	82.4	0.0172 (0.15)	51 (112)	10.0	11	gk813	18	**6SL3120-■TE21-8A■0**
1PH8103-..F...	85.9			13.0	14	gk813	18	**6SL3120-■TE21-8A■0**
1PH8103-..G...	89.1			17.0	19	gk813	18	**6SL3120-■TE21-8A■0**
1PH8103-..M...	90.0			25.7	31	gk813	30	**6SL3120-1TE23-0A■0**
1PH8105-..F...	87.8	0.0252 (0.22)	65 (143)	17.5	20	gk813	18	**6SL3120-■TE21-8A■0**
1PH8107-..B...	73.0	0.0289 (0.26)	73 (161)	8.8	9	gk813	9	**6SL3120-1TE21-0AD0**
1PH8107-..D...	85.2			17.5	25	gk813	18	**6SL3120-■TE21-8A■0**
1PH8107-..F...	87.8			22.0	25	gk813	30	**6SL3120-1TE23-0A■0**
1PH8107-..G...	90.9			26.0	29	gk813	30	**6SL3120-1TE23-0A■0**
1PH8107-..M...	90.0			38.0	48	gk813	45	**6SL3120-1TE24-5AC0**
1PH8131-..B...	81.0	0.059 (0.52)	89 (196)	9.0	10	gk833	9	**6SL3120-1TE21-0AD0**
1PH8131-..F...	91.4			24.0	30	gk833	30	**6SL3120-1TE23-0A■0**
1PH8133-1.B...	78.0	0.076 (0.67)	106 (234)	15.5	16	gk833	18	**6SL3120-1TE21-8A■0**
1PH8133-..D...	88.4			29.0	32	gk833	30	**6SL3120-1TE23-0A■0**
1PH8133-..F...	91.3			34.0	42	gk833	45	**6SL3120-1TE24-5AC0**
1PH8133-..G...	93.3			44.0	54	gk833	45	**6SL3120-1TE24-5AC0**
1PH8135-..B...	78.0	0.094 (0.83)	125 (276)	18.0	19	gk833	18	**6SL3120-1TE21-8A■0**
1PH8135-..F...	90.9			43.0	53	gk833	45	**6SL3120-1TE24-5AC0**
1PH8137-..B...	82.0	0.109 (0.96)	141 (311)	18.0	19	gk833	18	**6SL3120-1TE21-8A■0**
1PH8137-..D...	89.1			43.0	47	gk833	45	**6SL3120-1TE24-5AC0**
1PH8137-..F...	90.7			56.0	68	gk833	60	**6SL3120-1TE26-0AA3**
1PH8137-..G...	92.9			56.0	73	gk833	60	**6SL3120-1TE26-0AA3**
1PH8163-..B...	81.9	0.216 (1.91)	196 (432)	30.0	32	gk863	30	**6SL3120-1TE23-0A■0**
1PH8163-..D...	91.5			55.0	60	gk863	60	**6SL3120-1TE26-0AA3**
1PH8163-..F...	92.6			70.0	87	gk863	85	**6SL3120-1TE28-5AA3**
1PH8163-..G...	93.5			78.0	111	gk863	85	**6SL3120-1TE28-5AA3**
1PH8165-..B...	83.0	0.232 (2.83)	230 (507)	36.0	37	gk863	45	**6SL3120-1TE24-5AC0**
1PH8165-..D...	92.1			69.0	77	gk863	85	**6SL3120-1TE28-5AA3**
1PH8165-..F...	93.4			76.0	95	gk863	85	**6SL3120-1TE28-5AA3**
1PH8165-..G...	93.2			85.0	122	gk863	85	**6SL3120-1TE28-5AA3**

Motor Module:		
Single Motor Module	**1**	
Double Motor Module	**2**	
For continuous load with 200% overload (C-type)		**C**
For highly dynamic, intermittent load cycles with 300% overload (D-type)		**D**

[6] Extra weight for version with hollow shaft approx. 2.5 kg (5.51 lb).

[7] Compliance with the rated pulse frequencies is essential; the rated motor data is valid for 4 kHz.

© Siemens 2022

Selection and ordering data

Rated speed	Maximum speed	Rated power	Rated torque	Maximum torque[1]	**SIMOTICS M-1PH8 Premium Performance asynchronous motors**	Efficiency	Moment of inertia	Motor with solid shaft Weight, approx.
n_{rated}	n_{max}	P_{rated}	M_{rated}	M_{max}		η	J	m
rpm	rpm	kW (hp)	Nm (lb_f-ft)	Nm (lb_f-ft)	Article No.	%	kgm^2 (lb_f-in-s^2)	kg (lb)
Shaft height SH 80 – Forced ventilation – Line voltage 400 V 3 AC, operation on Active Line Module								
9000	24000	**2.8 (3.75)**	3.0 (2.21)	20.0 (14.8)	**1PH8081-1 ■ U ■ 2- ■ N ■ 1-Z Q12+Q52**	88.5	0.0045 (0.04)	24 (52.9)
9000	24000	**2.8 (3.75)**	3.0 (2.21)	20.0 (14.8)	**1PH8081-1 ■ W ■ 2- ■ N ■ 1-Z Q12+Q52**	84.3	0.0045 (0.04)	24 (52.9)
9000	24000	**3.5 (4.69)**	3.7 (2.73)	24.0 (17.7)	**1PH8081-1 ■ V ■ 2- ■ N ■ 1-Z Q12+Q52**	95.0	0.0045 (0.04)	24 (52.9)
5200	24000	**4.5 (6.03)**	8.3 (6.12)	50.0 (36.9)	**1PH8083-1 ■ W ■ 2- ■ N ■ 1-Z Q12+Q52**	86.6	0.0069 (0.06)	29.5 (65.0)
12000	24000	**4.5 (6.03)**	3.6 (2.66)	20.0 (14.8)	**1PH8083-1 ■ V ■ 2- ■ N ■ 1-Z Q12+Q52**	93.9	0.0069 (0.06)	29.5 (65.0)
12000	24000	**6.5 (8.72)**	5.2 (3.84)	19.0 (14.0)	**1PH8087-1 ■ V ■ 2- ■ N ■ 1-Z Q12+Q52**	94.7	0.0094 (0.08)	37 (81.6)
Shaft height SH 80 – Water cooling – Line voltage 400 V 3 AC, operation on Active Line Module								
9000	24000	**8.0 (10.7)**	8.5 (6.27)	32.0 (23.6)	**1PH8081-1 ■ T 2 2- ■ N ■ 1-Z Q12+Q52**	94.7	0.0045 (0.04)	27 (59.5)
9000	24000	**7.5 (10.1)**	8.0 (5.90)	27.0 (19.9)	**1PH8081-1 ■ U 2 2- ■ N ■ 1-Z Q12+Q52**	91.1	0.0045 (0.04)	27 (59.5)
9000	24000	**7.3 (9.79)**	7.7 (5.68)	18.0 (13.3)	**1PH8081-1 ■ W 2 2- ■ N ■ 1-Z Q12+Q52**	92.7	0.0045 (0.04)	27 (59.5)
9000	24000	**7.7 (10.3)**	8.2 (6.05)	21.0 (15.5)	**1PH8081-1 ■ V 2 2- ■ N ■ 1-Z Q12+Q52**	98.0	0.0045 (0.04)	27 (59.5)
12000	24000	**9.0 (12.1)**	7.2 (5.31)	24.0 (17.7)	**1PH8083-1 ■ T 2 2- ■ N ■ 1-Z Q12+Q52**	83.6	0.0069 (0.06)	34 (75.0)
5200	24000	**10.0 (13.4)**	18.4 (13.6)	64.0 (47.2)	**1PH8083-1 ■ U 2 2- ■ N ■ 1-Z Q12+Q52**	91.9	0.0069 (0.06)	34 (75.0)
5000	24000	**11.0 (14.8)**	21.0 (15.5)	67.0 (49.4)	**1PH8087-1 ■ U 2 2- ■ N ■ 1-Z Q12+Q52**	95.8	0.0094 (0.08)	44 (97.0)

For versions, see
Article No. supplements and options.

[1] Dependent on selected Motor Module.
[2] The pulse frequency must be taken into account; a derating factor of 0.6 is applied for 8 kHz.

© Siemens 2022

Motor type (repeated)	Rated current	Maximum current[1)]	**SINAMICS S120**	**SINAMICS S120 Motor Module**	
			Pulse frequency	Rated output current[2)]	**Booksize format** Internal air cooling For further components, see SINAMICS S120 drive system
	I_{rated}	$I_{max.}$		I_{rated}	
	A	A	kHz	A	Article No.
1PH8081-1.U.2-...	12.5	60.0	4	18	**6SL3120-■TE21-8A■0**
1PH8081-1.W.2-...	12.5	60.0	8	30	**6SL3120-1TE23-0A■0**
1PH8081-1.V.2-...	15.5	60.0	8	30	**6SL3120-1TE23-0A■0**
1PH8083-1.W.2-...	15.5	68.0	8	30	**6SL3120-1TE23-0A■0**
1PH8083-1.V.2-...	15.5	68.0	8	30	**6SL3120-1TE23-0A■0**
1PH8087-1.V.2-...	19.0	68.0	8	45	**6SL3120-1TE24-5AA3**
1PH8081-1.T22-...	25.6	77.0	4	30	**6SL3120-1TE23-0A■0**
1PH8081-1.U22-...	25.0	77.0	4	30	**6SL3120-1TE23-0A■0**
1PH8081-1.W22-...	23.9	54.0	8	45	**6SL3120-1TE24-5AA3**
1PH8081-1.V22-...	23.8	54.0	8	45	**6SL3120-1TE24-5AA3**
1PH8083-1.T22-...	24.0	78.0	4	45	**6SL3120-1TE24-5AC0**
1PH8083-1.U22-...	26.4	81.0	4	45	**6SL3120-1TE24-5AC0**
1PH8087-1.U22-...	25.1	71.0	4	45	**6SL3120-1TE24-5AC0**

Motor Module: Single Motor Module Double Motor Module	 **1** **2**
For continuous load with 200% overload (C-type) For highly dynamic, intermittent load cycles with 300% overload (D-type)	**C** **D**

6

© Siemens 2022

Selection and ordering data

Rated speed	Continuous speed, max.[1]			Operating speed during field weakening[1)5)]	Rated power	Rated torque	Static torque	**SIMOTICS M-1PH8 asynchronous motors**
Y/Δ	Y/Δ	Y/Δ	Δ	Y/Δ	Y/Δ	Y/Δ	Y/Δ	
n_{rated}	n_{max1}[2)]	n_{max2}[3)]	n_{max3}[4)]	n_2	P_{rated}	M_{rated}	M_0	
rpm	rpm	rpm	rpm	rpm	kW (hp)	Nm (lb_f-ft)	Nm (lb_f-ft)	Article No.
Shaft height 100 – Forced ventilation – Star/delta circuit – Line voltage 400 V 3 AC, operation on Active Line Module								
2000/5000	9000	12000	18000	8950/10000	4.9/4.9 (6.57/6.57)	23/9 (17.0/6.64)	29/19 (21.4/14.0)	**1PH8101-1■S■■-■■■1**
	9000	12000	18000	7650/10000	10/9.3 (13.4/12.5)	48/18 (35.4/13.3)	55/36 (40.6/26.6)	**1PH8105-1■S■■-■■■1**
	9000	12000	18000	8550/10000	11/11 (14.8/14.8)	53/21 (39.1/15.5)	63/42 (46.5/31.0)	**1PH8107-1■S■■-■■■1**
Shaft height 132 – Forced ventilation – Star/delta circuit – Line voltage 400 V 3 AC, operation on Active Line Module								
2000/5000	8000	10000	15000	8000/10000	14.6/14.6 (19.6/19.6)	70/28 (51.6/20.7)	94/55 (69.3/40.6)	**1PH8131-1■S■■-■■■1**
	8000	10000	15000	6500/10000	24.5/24.5 (32.9/32.9)	117/47 (86.3/34.7)	157/94 (116/69.3)	**1PH8135-1■S■■-■■■1**
	8000	10000	15000	3000/6000	29/27.5 (38.9/36.9)	138/53 (102/39.1)	185/105 (136/77.4)	**1PH8137-1■S■■-■■■1**

For versions, see Article No. supplements and options.

1) Speed data are based on an infeed with Active Line Module (see characteristic curves); the maximum speed of the encoders must be observed.
2) Bearing design for standard (14th Data position is B to H); reduced values for type "F", see 1PH8 Configuration Manual.
3) Bearing design for Performance (14th data position is L).
4) Bearing design for High Performance (14th data position is M).
5) n_2: max. permissible thermal speed at constant output or speed, which is at the voltage limit when $P = P_{rated}$.

© Siemens 2022

Motor type (repeated)	Efficiency	Moment of inertia	Weight, approx.[6]	Rated current	Stall current	Terminal box	**SINAMICS S120 Motor Module**	
							Rated output current[7]	**Booksize format** Internal air cooling For further components, see SINAMICS S120 drive system
	Y/Δ			Y/Δ	Y/Δ			
	η	J	m	I_{rated}	I_0		I_{rated}	
	%	kgm^2 (lb_f-in-s^2)	kg (lb)	A	A	Type	A	Article No.
1PH8101-1.S...	87.2/90.2	0.0138 (0.12)	42 (92.6)	13.2/13.5	15/20	gk826	18	**6SL3120-■TE21-8A■0**
1PH8105-1.S...	89.1/91.4	0.0252 (0.22)	65 (143)	23/24	25/34	gk826	30	**6SL3120-1TE23-0A■0**
1PH8107-1.S...	89.4/90.9	0.0289 (0.26)	73 (161)	26.7/28	30/40	gk826	30	**6SL3120-1TE23-0A■0**
1PH8131-1.S...	90.8/89.7	0.059 (0.52)	89 (196)	39/40	47/56	gk846	45	**6SL3120-1TE24-5AC0**
1PH8135-1.S...	91.7/93.9	0.094 (0.83)	125 (276)	51/52	62/78	gk846	60	**6SL3120-1TE26-0AC0**
1PH8137-1.S...	93.1/91.9	0.109 (0.96)	141 (311)	56/56	68/87	gk846	60	**6SL3120-1TE26-0AC0**

Motor Module: Single Motor Module Double Motor Module	**1** **2**	
For continuous load with 200% overload (C-type) For highly dynamic, intermittent load cycles with 300% overload (D-type)		**C** **D**

6

[6] Extra weight for version with hollow shaft approx. 2.5 kg (5.51 lb).
[7] Compliance with the rated pulse frequencies is essential; the rated motor data is valid for 4 kHz.

© Siemens 2022

Selection and ordering data

Rated speed	Continuous speed, max.[1] With holding brake	Continuous speed, max.[1] Without holding brake		Operating speed during field weakening[1)4)]	Rated power	Rated torque	Static torque	**SIMOTICS M-1PH8 asynchronous motors**
n_{rated}	$n_{max\ Br}$	n_{max1}[2]	n_{max2}[3]	n_2	P_{rated}	M_{rated}	M_0	
rpm	rpm	rpm	rpm	rpm	kW (hp)	Nm (lb_f-ft)	Nm (lb_f-ft)	Article No.
Shaft height 180 – Forced ventilation – Line voltage 400 V 3 AC, operation on Active Line Module								
500	3500	5000	7500	2900	20.5 (27.49)	392 (289.1)	392 (289.1)	**1PH8184-■■B■■-■■■1**
800	3500	5000	7500	3800	31.0 (41.57)	370 (272.9)	368 (271)	**1PH8184-■■C■■-■■■1**
1150	3500	5000	7500	4800	44.0 (59.0)	372 (274)	372 (274)	**1PH8184-■■D■■-■■■1**
1750	3500	5000	7500	5000	60.0 (80.46)	327 (241.2)	325 (240)	**1PH8184-■■F■■-■■■1**
2900	3500	5000	7500	5000	81.0 (108.62)	267 (169.9)	298 (220)	**1PH8184-■■L■■-■■■1**
500	3500	5000	7500	3100	26.5 (35.54)	506 (373)	506 (373)	**1PH8186-■■B■■-■■■1**
800	3500	5000	7500	4100	40.0 (53.64)	478 (353)	478 (353)	**1PH8186-■■C■■-■■■1**
1150	3500	5000	7500	5000	58.0 (77.78)	482 (355.5)	487 (359)	**1PH8186-■■D■■-■■■1**
1750	3500	5000	7500	5000	85.0 (113.99)	464 (342.2)	471 (347)	**1PH8186-■■F■■-■■■1**
2900	3500	5000	7500	5000	101 (135.44)	333 (245.6)	405 (299)	**1PH8186-■■L■■-■■■1**
Shaft height 225 – Forced ventilation – Line voltage 400 V 3 AC, operation on Active Line Module								
500	3100	4500	6000	2500	38.0 (50.96)	726 (535.5)	726 (535)	**1PH8224-■■B■■-■■■1**
800	3100	4500	6000	3400	57.0 (76.44)	681 (502.3)	750 (553)	**1PH8224-■■C■■-■■■1**
1150	3100	4500	6000	3400	81.0 (108.62)	673 (496.4)	678 (500)	**1PH8224-■■D■■-■■■1**
1750	3100	4500	6000	3200	110 (147.51)	600 (442.6)	605 (446)	**1PH8224-■■F■■-■■■1**
2900	3100	4500	6000	3300	149 (199.81)	491 (362.2)	542 (400)	**1PH8224-■■L■■-■■■1**
500	3100	4500	6000	2600	49.0 (65.71)	936 (690)	936 (690)	**1PH8226-■■B■■-■■■1**
800	3100	4500	6000	3600	73.0 (97.89)	872 (643.2)	928 (684)	**1PH8226-■■C■■-■■■1**
1150	3100	4500	6000	3400	105 (140.81)	872 (643.2)	879 (648)	**1PH8226-■■D■■-■■■1**
1750	3100	4500	6000	3300	135 (181.04)	737 (543.6)	828 (611)	**1PH8226-■■F■■-■■■1**
2900	3100	4500	6000	3300	185 (248.09)	609 (449.2)	642 (474)	**1PH8226-■■L■■-■■■1**
500	3100	4500	6000	2700	60.0 (80.46)	1146 (845)	1146 (845)	**1PH8228-■■B■■-■■■1**
800	3100	4500	6000	3800	92.0 (123.37)	1098 (809.9)	1119 (825)	**1PH8228-■■C■■-■■■1**
1150	3100	4500	6000	3400	129 (172.99)	1071 (790)	1079 (796)	**1PH8228-■■D■■-■■■1**
1750	3100	4500	6000	3400	179 (240.04)	977 (720.6)	1019 (752)	**1PH8228-■■F■■-■■■1**
2900	3100	4500	6000	3300	215 (288.32)	708 (522.2)	783 (578)	**1PH8228-■■L■■-■■■1**
Shaft height 280 – Forced ventilation – Line voltage 400 V 3 AC, operation on Active Line Module								
500	–	3300	–	1600	80.0 (107.3)	1529 (1127.8)	1504 (1109)	**1PH8284-1■B■■-■■■1**
800	–	3300	–	2300	125 (167.63)	1492 (1054)	1501 (1107)	**1PH8284-1■C■■-■■■1**
1150	–	3300	–	2200	170 (227.97)	1414 (1043)	1433 (1057)	**1PH8284-1■D■■-■■■1**
1750	–	3300	–	2200	225 (301.73)	1228 (905.8)	1248 (920)	**1PH8284-1■F■■-■■■1**
500	–	3300	–	1600	100 (134.1)	1909 (1408)	1909 (1408)	**1PH8286-1■B■■-■■■1**
800	–	3300	–	2300	155 (341.78)	1850 (1364.6)	1883 (1388.9)	**1PH8286-1■C■■-■■■1**
1150	–	3300	–	2200	210 (463.05)	1745 (1287.1)	1738 (1281.9)	**1PH8286-1■D■■-■■■1**
1750	–	3300	–	2200	270 (595.35)	1474 (1087.2)	1592 (1174)	**1PH8286-1■F■■-■■■1**
500	–	3300	–	1600	130 (174.33)	2481 (1830)	2481 (1830)	**1PH8288-1■B■■-■■■1**
800	–	3300	–	2300	190 (254.79)	2268 (1672,9)	2268 (1672,9)	**1PH8288-1■C■■-■■■1**
1150	–	3300	–	2200	260 (348.66)	2160 (1593.2)	2158 (1592)	**1PH8288-1■D■■-■■■1**

For versions, see Article No. supplements and options.

[1] Speed data are based on an infeed with Active Line Module (see characteristic curves); the maximum speed of the encoders must be observed.
[2] Bearing design for standard (14th data position is A to F).
[3] Bearing design for Performance (14th data position is L).
[4] n_2: max. permissible thermal speed at constant output or speed, which is at the voltage limit when $P = P_{rated}$.

© Siemens 2022

Motor type (repeated)	Efficiency	Moment of inertia	Weight, approx. without holding brake	Rated current	Stall current	Terminal box	**SINAMICS S120 Motor Module**	
							Rated output current[5]	**Booksize format** Internal air cooling
	η	J	m	I_{rated}	I_0		I_{rated}	For further components, see SINAMICS S120 drive system
	%	kgm² (lbf-in-s²)	kg (lb)	A	A	Type	A	Article No.
1PH8184-..B...	86.1	0.489 (4.33)	350 (772)	49	49	1XB7322	60	**6SL3120-1 TE26-0AC0**
1PH8184-..C...	90.1	0.489 (4.33)	350 (772)	65	65	1XB7322	85	**6SL3120-1 TE28-5AA3**
1PH8184-..D...	92.8	0.489 (4.33)	350 (772)	86	87	1XB7322	85[6]	**6SL3120-1 TE28-5AA3**
1PH8184-..F...	94.4	0.489 (4.33)	350 (772)	120	116	1XB7322	132	**6SL3120-1 TE31-3AA3**
1PH8184-..L...	95.2	0.489 (4.33)	350 (772)	152	166	1XB7322	200	**6SL3120-1 TE32-0AA4**
1PH8186-..B...	87.5	0.652 (5.77)	422 (931)	65	65	1XB7322	85	**6SL3120-1 TE28-5AA3**
1PH8186-..C...	91.6	0.652 (5.77)	422 (931)	83	83	1XB7322	85	**6SL3120-1 TE28-5AA3**
1PH8186-..D...	93.3	0.652 (5.77)	422 (931)	112	112	1XB7322	132	**6SL3120-1 TE31-3AA3**
1PH8186-..F...	94.9	0.652 (5.77)	422 (931)	164	166	1XB7322	200	**6SL3120-1 TE32-0AA4**
1PH8186-..L...	95.4	0.652 (5.77)	422 (931)	198	230	1XB7422	260	**6SL3320-1 TE32-6AA3**
1PH8224-..B...	89.6	1.48 (13.10)	610 (1345)	85	86	1XB7322	85[6]	**6SL3120-1 TE28-5AA3**
1PH8224-..C...	93.4	1.48 (13.10)	610 (1345)	126	136	1XB7322	132[6]	**6SL3120-1 TE31-3AA3**
1PH8224-..D...	94.6	1.48 (13.10)	610 (1345)	156	158	1XB7322	200	**6SL3120-1 TE32-0AA4**
1PH8224-..F...	95.6	1.48 (13.10)	610 (1345)	198	200	1XB7322	200	**6SL3120-1 TE32-0AA4**
1PH8224-..L...	95.7	1.48 (13.10)	610 (1345)	270	295	1XB7700	310	**6SL3320-1 TE33-1AA3**
1PH8226-..B...	90.8	1.93 (17.08)	740 (1632)	110	110	1XB7322	132	**6SL3120-1 TE31-3AA3**
1PH8226-..C...	94.0	1.93 (17.08)	740 (1632)	154	162	1XB7322	200	**6SL3120-1 TE32-0AA4**
1PH8226-..D...	94.9	1.93 (17.08)	740 (1632)	192	194	1XB7322	200	**6SL3120-1 TE32-0AA4**
1PH8226-..F...	96.0	1.93 (17.08)	740 (1632)	250	270	1XB7422	310	**6SL3320-1 TE33-1AA3**
1PH8226-..L...	96.0	1.93 (17.08)	740 (1632)	335	350	1XB7700	380	**6SL3320-1 TE33-8AA3**
1PH8228-..B...	91.4	2.33 (20.62)	870 (1918)	132	132	1XB7322	132	**6SL3120-1 TE31-3AA3**
1PH8228-..C...	94.1	2.33 (20.62)	870 (1918)	182	188	1XB7322	200	**6SL3120-1 TE32-0AA4**
1PH8228-..D...	95.3	2.33 (20.62)	870 (1918)	235	235	1XB7422	260	**6SL3320-1 TE32-6AA3**
1PH8228-..F...	96.1	2.33 (20.62)	870 (1918)	330	340	1XB7700	380	**6SL3320-1 TE33-8AA3**
1PH8228-..L...	96.1	2.33 (20.62)	870 (1918)	390	420	1XB7700	490	**6SL3320-1 TE35-0AA3**
1PH8284-1.B...	93.5	4.20 (37.17)	1200 (2464)	154	154	1XB7700	200	**6SL3120-1 TE32-0AA4**
1PH8284-1.C...	95.2	4.20 (37.17)	1200 (2464)	235	240	1XB7700	260	**6SL3320-1 TE32-6AA3**
1PH8284-1.D...	96.0	4.20 (37.17)	1200 (2464)	310	315	1XB7700	310[6]	**6SL3320-1 TE33-1AA3**
1PH8284-1.F...	96.4	4.20 (37.17)	1200 (2464)	390	390	1XB7700	490	**6SL3320-1 TE35-0AA3**
1PH8286-1.B...	93.9	5.20 (46.03)	1400 (3087)	188	188	1XB7700	200	**6SL3120-1 TE32-0AA4**
1PH8286-1.C...	95.5	5.20 (46.03)	1400 (3087)	285	295	1XB7700	310	**6SL3320-1 TE33-1AA3**
1PH8286-1.D...	96.2	5.20 (46.03)	1400 (3087)	410	410	1XB7700	490	**6SL3320-1 TE35-0AA3**
1PH8286-1.F...	96.6	5.20 (46.03)	1400 (3087)	460	490	1XB7700	490	**6SL3320-1 TE35-0AA3**
1PH8288-1.B...	94.1	6.30 (55.76)	1650 (3638)	245	245	1XB7700	260	**6SL3320-1 TE32-6AA3**
1PH8288-1.C...	95.7	6.30 (55.76)	1650 (3638)	365	365	1XB7700	380	**6SL3320-1 TE33-8AA3**
1PH8288-1.D...	96.4	6.30 (55.76)	1650 (3638)	495	495	1XB7700	490[6]	**6SL3320-1 TE35-0AA3**

Format:	
Booksize	**1**
Chassis	**3**

Motor Module:	
Single Motor Module	**1**

[5] Compliance with the rated pulse frequencies is essential; the rated motor data is valid for 4 kHz or 2 kHz.
[6] The rated output current of the Motor Module is lower than the rated motor current at 4 kHz or 2 kHz.

© Siemens 2022

Selection and ordering data

Rated speed	Continuous speed, max.[1] With holding brake	Without holding brake			Operating speed during field weakening[1)5)]	Rated power	Rated torque	Static torque	**SIMOTICS M-1PH8 asynchronous motors**
n_{rated}	$n_{max\ Br}$	n_{max1}[2)]	n_{max2}[3)]	n_{max3}[4)]	n_2	P_{rated}	M_{rated}	M_0	
rpm	rpm	rpm	rpm	rpm	rpm	kW (hp)	Nm (lb_f-ft)	Nm (lb_f-ft)	Article No.
Shaft height 80 – Water cooling – Line voltage 400 V 3 AC, operation on Active Line Module									
1750	50000	10000	12000	–	4100	4.0 (5.36)	22 (16.2)	23 (17.0)	**1PH8083-■■F2■-■■■1**
2300	50000	10000	15000	16000	8150	4.9 (6.57)	20 (14.8)	23 (17.0)	**1PH8083-■■G2■-■■■1**
5000	–	10000	15000	20000	17700	7.5 (10.1)	14 (10.3)	23 (17.0)	**1PH8083-1■N2■-■■■1**
1750	5000	10000	15000	–	6600	5.4 (7.24)	29 (21.4)	34 (25.1)	**1PH8087-■■F2■-■■■1**
2300	5000	10000	15000	19000	8850	7.0 (9.39)	29 (21.4)	34 (25.1)	**1PH8087-■■G2■-■■■1**
5000	–	10000	15000	20000	18700	9.5 (12.7)	18 (13.3)	27 (19.9)	**1PH8087-1■N2■-■■■1**
Shaft height 100 – Water cooling – Line voltage 400 V 3 AC, operation on Active Line Module									
1750	5000	9000	–	–	2500	5.8 (7.78)	32 (23.6)	34 (25.1)	**1PH8101-■■F2■-■■■1**
2300	5000	9000	12000	–	5000	7.3 (9.79)	30 (22.1)	34 (25.1)	**1PH8101-■■G2■-■■■1**
1750	5000	9000	–	–	5000	8.2 (11.0)	45 (33.2)	48 (35.4)	**1PH8103-■■F2■-■■■1**
2300	5000	9000	12000	–	3000	10.9 (14.6)	45 (33.2)	48 (35.4)	**1PH8103-■■G2■-■■■1**
3300	5000	9000	12000	18000	13550	11.7 (15.7)	34 (25.1)	46 (33.9)	**1PH8103-■■M2■-■■■1**
1750	5000	9000	–	–	3400	12.5 (16.8)	68 (50.2)	74 (54.6)	**1PH8105-■■F2■-■■■1**
2300	5000	9000	12000	–	3500	15.0 (20.1)	62 (203)	74 (54.6)	**1PH8105-■■G2■-■■■1**
3300	5000	9000	12000	18000	9050	18.5 (24.8)	54 (39.8)	71 (52.4)	**1PH8105-■■M2■-■■■1**
1750	5000	9000	12000	–	4500	15.5 (20.8)	85 (62.7)	94 (69.3)	**1PH8107-■■F2■-■■■1**
3300	5000	9000	12000	18000	18050	20.0 (26.8)	58 (42.8)	82 (60.5)	**1PH8107-■■M2■-■■■1**
Shaft height 132 – Water cooling – Line voltage 400 V 3 AC, operation on Active Line Module									
1750	4500	8000	10000	11000	2500	17.0 (22.8)	93 (68.6)	96 (70.8)	**1PH8131-■■F2■-■■■1**
2300	4500	8000	10000	14000	4000	20.0 (26.8)	83 (61.2)	101 (74.5)	**1PH8131-■■G2■-■■■1**
1750	4500	8000	10000	13000	3500	19.5 (26.1)	106 (78.2)	136 (100)	**1PH8133-■■F2■-■■■1**
2300	4500	8000	10000	15000	6000	25.0 (33.5)	104 (76.7)	134 (98.8)	**1PH8133-■■G2■-■■■1**
1750	4500	8000	10000	14000	4000	25.5 (34.2)	139 (102.5)	172 (127)	**1PH8135-■■F2■-■■■1**
2300	4500	8000	10000	15000	4500	31.0 (41.6)	129 (95.2)	170 (125)	**1PH8135-■■G2■-■■■1**
1750	4500	8000	10000	15000	4500	31.5 (42.2)	172 (127)	202 (149)	**1PH8137-■■F2■-■■■1**
1750	4500	8000	10000	15000	5000	33.0 (44.3)	180 (133)	223 (164)	**1PH8138-■■F2■-■■■1**
Shaft height 160 – Water cooling – Line voltage 400 V 3 AC, operation on Active Line Module									
1750	4000	6500	9000	10000	3500	43.0 (57.7)	235 (173)	288 (212)	**1PH8163-■■F2■-■■■1**
2300	4000	6500	9000	10000	4000	48.0 (64.4)	199 (147)	281 (207)	**1PH8163-■■G2■-■■■1**
1750	4000	6500	9000	10000	3050	53.0 (71.1)	289 (213)	334 (246)	**1PH8165-■■F2■-■■■1**
2300	4000	6500	9000	10000	3000	60.0 (80.5)	249 (184)	306 (226)	**1PH8165-■■G2■-■■■1**
1750	4000	6500	9000	10000	3050	61.0 (81.8)	333 (246)	353 (260)	**1PH8166-■■F2■-■■■1**
2300	4000	6500	9000	10000	3000	72.0 (96.6)	299 (221)	353 (260)	**1PH8166-■■G2■-■■■1**

For versions, see Article No. supplements and options.

1) Speed data are based on an infeed with Active Line Module (see characteristic curves); the maximum speed of the encoders must be observed.
2) Bearing design for standard (14th data position is A to H); reduced values for type F, see 1PH8 Configuration Manual.
3) Bearing design for Performance (14th data position is L).
4) Bearing design for High Performance (14th data position is M).
5) n_2: max. permissible thermal speed at constant output or speed, which is at the voltage limit when $P=P_{rated}$.

© Siemens 2022

Motor type (repeated)	Efficiency	Moment of inertia without holding brake	Weight, approx.[6] without holding brake	Rated current	Stall current	Terminal box	**SINAMICS S120 Motor Module**	
							Rated output current[7]	**Booksize format** Internal air cooling
	η	J	m	I_{rated}	I_0		I_{rated}	For further components, see SINAMICS S120 drive system
	%	kgm² (lbf-in-s²)	kg (lb)	A	A	Type	A	Article No.
1PH8083-1.F2...	80.8	0.0064 (0.06)	36 (79.4)	8.7	9	gk803	9	**6SL3120-■TE21-0AD0**
1PH8083-1.G2...	84.6			12.0	13	gk803	18	**6SL3120-■TE21-8A■0**
1PH8083-1.N2...	89.1			18.0	23	gk803	18	**6SL3120-■TE21-8A■0**
1PH8087-1.F2...	83.1	0.0089 (0.08)	44 (97.0)	13.7	15	gk803	18	**6SL3120-■TE21-8A■0**
1PH8087-1.G2...	86.0			17.7	19	gk803	18	**6SL3120-■TE21-8A■0**
1PH8087-1.N2...	89.4			24.0	31	gk803	30	**6SL3120-1TE23-0A■0**
1PH8101-1.F2...	83.4	0.0138 (0.12)	51 (113)	12.8	13	gk823	18	**6SL3120-1TE21-8A■0**
1PH8101-1.G2...	87.4			16.8	18	gk803	18	**6SL3120-■TE21-8A■0**
1PH8103-1.F2...	85.1	0.0172 (0.15)	60 (44.3)	19.7	20	gk823	30	**6SL3120-1TE23-0A■0**
1PH8103-1.G2...	88.3			23.8	24	gk823	30	**6SL3120-1TE23-0A■0**
1PH8103-1.M2...	90.0			30.0	35	gk823	30	**6SL3120-1TE23-0A■0**
1PH8105-1.F2...	86.2	0.0252 (0.22)	74 (163)	28.5	29	gk823	30	**6SL3120-1TE23-0A■0**
1PH8105-1.G2...	89.1			34.0	38	gk823	45	**6SL3120-1TE24-5AC0**
1PH8105-1.M2...	91.0			45.0	52	gk823	45	**6SL3120-1TE24-5AC0**
1PH8107-1.F2...	84.7	0.0289 (0.26)	83 (183)	42.0	44	gk823	45	**6SL3120-1TE24-5AC0**
1PH8107-1.M2...	90.0			60.0	73	gk823	60	**6SL3120-1TE26-0AC0**
1PH8131-1.F2...	89.7	0.059 (0.52)	105 (232)	30.0	30	gk843	30	**6SL3120-1TE23-0A■0**
1PH8131-1.G2...	92.0			39.0	44	gk843	45	**6SL3120-1TE24-5AC0**
1PH8133-1.F2...	91.3	0.076 (0.67)	123 (271)	38.0	45	gk843	45	**6SL3120-1TE24-5AC0**
1PH8133-1.G2...	92.3			52.0	61	gk843	60	**6SL3120-1TE26-0AC0**
1PH8135-1.F2...	91.4	0.094 (0.83)	141 (311)	51.0	58	gk843	60	**6SL3120-1TE26-0AC0**
1PH8135-1.G2...	92.4			61.0	73	gk843	85	**6SL3120-1TE28-5AA3**
1PH8137-1.F2...	91.1	0.109 (0.96)	157 (346)	67.0	73	gk843	85	**6SL3120-1TE28-5AA3**
1PH8138-1.F2...	89.8	0.109 (0.96)	160 (353)	77.0	88	gk843	85	**6SL3120-1TE28-5AA3**
1PH8163-1.F2...	92.4	0.216 (1.91)	229 (169)	84.0	96	gk873	85	**6SL3120-1TE28-5AA3**
1PH8163-1.G2...	93.9	0.216 (1.91)	229 (169)	93.0	120	gk873	132	**6SL3120-1TE31-3AA3**
1PH8165-1.F2...	93.5	0.232 (2.05)	264 (582)	104	112	gk873	132	**6SL3120-1TE31-3AA3**
1PH8165-1.G2...	94.6	0.232 (2.05)	264 (582)	107	135	gk873	132	**6SL3120-1TE31-3AA3**
1PH8166-1.F2...	94.0	0.232 (2.05)	269 (593)	116	127	gk873	132	**6SL3120-1TE31-3AA3**
1PH8166-1.G2...	94.6	0.232 (2.05)	269 (593)	124	147	gk873	132	**6SL3120-1TE31-3AA3**

Motor Module:	
Single Motor Module	**1**
Double Motor Module	**2**
For continuous load with 200% overload (C-type)	**C**
For highly dynamic, intermittent load cycles with 300% overload (D-type)	**D**

[6] Extra weight for version with hollow shaft approx. 2.5 kg (5.51 lb).
[7] Compliance with the rated pulse frequencies is essential; the rated motor data is valid for 4 kHz.

© Siemens 2022

Selection and ordering data

Rated speed	Continuous speed, max.[1] With holding brake	Without holding brake		Operating speed during field weakening[1)4)]	Rated power	Rated torque	Static torque	SIMOTICS M-1PH8 asynchronous motors
n_{rated}	$n_{max\ Br}$	n_{max1}[2]	n_{max2}[3]	n_2	P_{rated}	M_{rated}	M_0	
rpm	rpm	rpm	rpm	rpm	kW (hp)	Nm (lb_f-ft)	Nm (lb_f-ft)	Article No.
Shaft height 180 – Water cooling – Line voltage 400 V 3 AC, operation on Active Line Module								
500	3500	5000	7500	1800	23.0 (30.8)	439 (323.8)	406 (299)	**1PH8184-■■B2■-■■■1**
800	3500	5000	7500	2900	38.0 (50.96)	454 (334.9)	450 (332)	**1PH8184-■■C2■-■■■1**
1150	3500	5000	7500	5000	54.0 (72.41)	448 (330.4)	449 (331)	**1PH8184-■■D2■-■■■1**
1750	3500	5000	7500	5000	82.0 (109.96)	447 (329.7)	446 (329)	**1PH8184-■■F2■-■■■1**
2900	3500	5000	7500	5000	102 (136.78)	336 (247.8)	363 (268)	**1PH8184-■■L2■-■■■1**
500	3500	5000	7500	2200	30.0 (40.23)	573 (422.6)	549 (405)	**1PH8186-■■B2■-■■■1**
800	3500	5000	7500	3500	49.0 (65.71)	585 (431.5)	587 (433)	**1PH8186-■■C2■-■■■1**
1150	3500	5000	7500	5000	74.0 (99.23)	615 (453.6)	611 (451)	**1PH8186-■■D2■-■■■1**
1750	3500	5000	7500	5000	111 (148.85)	606 (447)	592 (437)	**1PH8186-■■F2■-■■■1**
2900	3500	5000	7500	5000	135 (181.94)	445 (328.2)	458 (338)	**1PH8186-■■L2■-■■■1**
Shaft height 225 – Water cooling – Line voltage 400 V 3 AC, operation on Active Line Module								
500	3100	4500	6000	1500	46.0 (61.69)	879 (648.4)	860 (634.3)	**1PH8224-■■B2■-■■■1**
800	3100	4500	6000	2300	70.0 (93.9)	836 (616.6)	832 (613.7)	**1PH8224-■■C2■-■■■1**
1150	3100	4500	6000	3000	101 (135.44)	839 (618.8)	850 (627)	**1PH8224-■■D2■-■■■1**
1750	3100	4500	6000	3800	138 (185.06)	753 (555.4)	758 (559)	**1PH8224-■■F2■-■■■1**
2900	3100	4500	6000	3600	164 (219.92)	540 (398.3)	584 (431)	**1PH8224-■■L2■-■■■1**
500	3100	4500	6000	1700	59.0 (79.12)	1127 (831.3)	1122 (828)	**1PH8226-■■B2■-■■■1**
800	3100	4500	6000	2500	93.0 (124.71)	1110 (818.7)	1105 (815)	**1PH8226-■■C2■-■■■1**
1150	3100	4500	6000	2700	131 (157.67)	1088 (802.5)	1098 (810)	**1PH8226-■■D2■-■■■1**
1750	3100	4500	6000	3900	169 (226.63)	922 (680.1)	923 (681)	**1PH8226-■■F2■-■■■1**
2900	3100	4500	6000	3600	204 (207.56)	672 (495.7)	707 (521)	**1PH8226-■■L2■-■■■1**
500	3100	4500	6000	1800	72.0 (96.55)	1375 (1014.2)	1385 (1022)	**1PH8228-■■B2■-■■■1**
800	3100	4500	6000	2700	110 (147.51)	1313 (968.5)	1310 (966)	**1PH8228-■■C2■-■■■1**
1150	3100	4500	6000	2500	161 (215.90)	1337 (986.2)	1347 (994)	**1PH8228-■■D2■-■■■1**
1750	3100	4500	6000	3900	221 (296.36)	1206 (889.5)	1222 (901)	**1PH8228-■■F2■-■■■1**
2900	3100	4500	6000	3600	237 (317.82)	780 (575.3)	863 (637)	**1PH8228-■■L2■-■■■1**
Shaft height 280 – Water cooling – Line voltage 400 V 3 AC, operation on Active Line Module								
500	–	3300	–	2200	89.0 (119)	1700 (1253.9)	1695 (1250)	**1PH8284-1■B2■-■■■1**
800	–	3300	–	2200	141 (189)	1683 (1241.4)	1678 (1238)	**1PH8284-1■C2■-■■■1**
1150	–	3300	–	2200	198 (265.52)	1644 (1212.6)	1643 (1212)	**1PH8284-1■D2■-■■■1**
1750	–	3300	–	2200	265 (355.37)	1446 (1066.6)	1445 (1066)	**1PH8284-1■F2■-■■■1**
500	–	3300	–	2200	111 (148.85)	2120 (1563.7)	2125 (1567)	**1PH8286-1■B2■-■■■1**
800	–	3300	–	2200	175 (234.68)	2089 (1540.8)	2087 (1539)	**1PH8286-1■C2■-■■■1**
1150	–	3300	–	2300	246 (329.89)	2043 (1506.9)	2044 (1508)	**1PH8286-1■D2■-■■■1**
500	–	3300	–	2200	136 (182.38)	2598 (1916.3)	2602 (1919)	**1PH8288-1■B2■-■■■1**
800	–	3300	–	2200	215 (288.32)	2567 (1893.4)	2565 (1892)	**1PH8288-1■C2■-■■■1**

For versions, see Article No. supplements and options.

1) Speed data are based on an infeed with Active Line Module (see characteristic curves); the maximum speed of the encoders must be observed.
2) Bearing design for standard (14th data position is A to F).
3) Bearing design for Performance (14th data position is L).
4) n_2: max. permissible thermal speed at constant output or speed, which is at the voltage limit when $P=P_{rated}$.

© Siemens 2022

Motor type (repeated)	Efficiency	Moment of inertia without holding brake	Weight, approx. without holding brake	Rated current	Stall current	Terminal box	**SINAMICS S120 Motor Module**	
							Rated output current[5]	**Booksize format** Internal air cooling
	η	J	m	I_{rated}	I_0		I_{rated}	For further components, see SINAMICS S120 drive system
	%	kgm² (lbf-in-s²)	kg (lb)	A	A	Type	A	Article No.
1PH8184-..B2...	85.0	0.489 (4.33)	340 (750)	54	50	1XB7322-P05	60	**6SL3120-1TE26-0AC0**
1PH8184-..C2...	88.5			77	77	1XB7322-P05	85	**6SL3120-1TE28-5AA3**
1PH8184-..D2...	91.5			112	114	1XB7322-P05	132	**6SL3120-1TE31-3AA3**
1PH8184-..F2...	93.3			150	150	1XB7322-P05	200	**6SL3120-1TE32-0AA4**
1PH8184-..L2...	94.5			182	196	1XB7322-P05	200	**6SL3120-1TE32-0AA4**
1PH8186-..B2...	86.8	0.652 (5.77)	410 (904)	70	68	1XB7322-P05	85	**6SL3120-1TE28-5AA3**
1PH8186-..C2...	90.4			99	97	1XB7322-P05	132	**6SL3120-1TE31-3AA3**
1PH8186-..D2...	92.7			148	148	1XB7322-P05	200	**6SL3120-1TE32-0AA4**
1PH8186-..F2...	93.9			200	198	1XB7322-P05	200	**6SL3120-1TE32-0AA4**
1PH8186-..L2...	94.8			245	250	1XB7422-P06	260	**6SL3320-1TE32-6AA3**
1PH8224-..B2...	88.3	1.45 (12.83)	610 (1345)	100	100	1XB7322-P05	132	**6SL3120-1TE31-3AA3**
1PH8224-..C2...	92.0			130	128	1XB7322-P05	132	**6SL3120-1TE31-3AA3**
1PH8224-..D2...	94.4			186	188	1XB7322-P05	200	**6SL3120-1TE32-0AA4**
1PH8224-..F2...	95.4			240	240	1XB7422-P06	260	**6SL3320-1TE32-6AA3**
1PH8224-..L2...	96.1			285	310	1XB7700-P02	310	**6SL3320-1TE33-1AA3**
1PH8226-..B2...	89.9	1.90 (16.82)	740 (1632)	128	130	1XB7322-P05	132	**6SL3120-1TE31-3AA3**
1PH8226-..C2...	93.4			186	184	1XB7322-P05	200	**6SL3120-1TE32-0AA4**
1PH8226-..D2...	94.5			230	235	1XB7422-P06	260	**6SL3320-1TE32-6AA3**
1PH8226-..F2...	89.5			295	295	1XB7700-P02	310	**6SL3320-1TE33-1AA3**
1PH8226-..L2...	96.0			360	380	1XB7700-P02	380	**6SL3320-1TE33-8AA3**
1PH8228-..B2...	90.8	2.35 (20.8)	870 (1918)	150	154	1XB7322-P05	200	**6SL3120-1TE32-0AA4**
1PH8228-..C2...	93.7			210	210	1XB7322-P05	210	**6SL3320-1TE32-1AA3**
1PH8228-..D2...	94.8			280	280	1XB7700-P02	310	**6SL3320-1TE33-1AA3**
1PH8228-..F2...	96.1			390	390	1XB7700-P02	380[6]	**6SL3320-1TE33-8AA3**
1PH8228-..L2...	96.3			415	455	1XB7700-P02	490	**6SL3320-1TE35-0AA3**
1PH8284-1.B2...	92.9	4.21 (37.26)	1280 (2822)	172	170	1XB7322-P05	200	**6SL3120-1TE32-0AA4**
1PH8284-1.C2...	95.0			260	260	1XB7700-P02	260	**6SL3320-1TE32-6AA3**
1PH8284-1.D2...	96.0			355	350	1XB7700-P02	380	**6SL3320-1TE33-8AA3**
1PH8284-1.F2...	96.6			445	445	1XB7700-P02	490	**6SL3320-1TE35-0AA3**
1PH8286-1.B2...	93.1	5.16 (45.67)	1490 (3285)	205	210	1XB7322-P05	210	**6SL3320-1TE32-1AA3**
1PH8286-1.C2...	95.3			320	320	1XB7700-P02	380	**6SL3320-1TE33-8AA3**
1PH8286-1.D2...	96.2			455	460	1XB7700-P02	490	**6SL3320-1TE35-0AA3**
1PH8288-1.B2...	93.8	6.29 (55.67)	1750 (3859)	260	260	1XB7700-P02	260	**6SL3320-1TE32-6AA3**
1PH8288-1.C2...	95.6			405	400	1XB7700-P02	490	**6SL3320-1TE35-0AA3**

Format:	
Booksize	**1**
Chassis	**3**

Motor Module:	
Single Motor Module	**1**

[5] Compliance with the rated pulse frequencies is essential; the rated motor data is valid for 4 kHz or 2 kHz.
[6] The rated output current of the Motor Module is lower than the rated motor current at 4 kHz or 2 kHz.

© Siemens 2022

Selection and ordering data

Data position of the Article No.	1	2	3	4	5	6	7		8	9	10	11	12		13	14	15	16		
Shaft height 80	**1**	**P**	**H**	**8**	**0**	**8**	**.**	**–**	**1**	■	**.**	■	■	**–**	■	■	■	■	**–**	**Z**
Overall length							**1**													
							3													
							7													
Asynchronous version									**1**											
Encoder systems for motors without DRIVE-CLiQ interface																				
Incremental encoder sin/cos 1 V_{pp} 256 S/R without C and D tracks (encoder IN256S/R)										**C**								**2**		
Encoder systems for motors with DRIVE-CLiQ interface																				
Incremental encoder 19 bit without commutation position (encoder IN19DQ)										**S**								**1**		
Rated speed (winding design)																				
Cooling		**Degree of protection**																		
Forced ventilation DE → NDE		IP55										**0**								
Forced ventilation NDE → DE		IP55										**1**								
Water cooling		IP65										**2**								
Type of construction																				
IM B5 (IM V1, IM V3)													**2**							
Shaft extension DE[1]		**Balancing**																		
Plain shaft		–													**0**					
Plain hollow shaft[2]		–													**3**					**Y64**[2]
Bearing design		**Vibration severity acc. to Siemens/EN 60034-14**							**Shaft and flange accuracy**											
Premium Performance[3]		SPECIAL/B							SPECIAL							**N**				**Q12**[3]
Power connection (looking at DE)		**Cable entry**							**Signal connection**											
Terminal box top		Right							DE								**A**			
Terminal box top		Left							DE								**B**			
Terminal box top		NDE							Left								**C**			
Terminal box top		DE							Left								**D**			
Power connector top		Right							DE								**E**			
Power connector top		Left							DE								**F**			
Power connector top		NDE							Left								**G**			
Power connector top		DE							Left								**H**			
Version[5]																				
Special version (order codes required for options)																				
Flange DE with additional 4 × M8 thread for adapter plate for aligning motor shaft with spindle shaft																				**Q52**[4]

[1] Shaft extension 24 mm × 50 mm (0.94 × in 1.97 in) (d × l).

[2] Only possible in combination with option Y64, prepared for turning bushings without bearings.

[3] Only possible in combination with option Q12.
Option Q12 (sealing air connection) is absolutely essential for Premium Performance motors in order to cool the bearings and provide protection against the ingress of fluid. For further details on interfaces and sealing air conditioning, see the 1PH8 Configuration Manual.

[4] It is absolutely essential to order all versions with this option.

[5] Directly coupled to 9th data position.

© Siemens 2022

Selection and ordering data

Data position of the Article No.	1	2	3	4	5	6	7		8	9	10	11	12		13	14	15	16		
Shaft height 80	**1**	**P**	**H**	**8**	**0**	**8**	**.**	**–**	**3**	■	**.**	■	■	**–**	■	■	■	■	**–**	**Z**
Shaft height 100	**1**	**P**	**H**	**8**	**1**	**0**	**.**	**–**	**3**	■	**.**	■	■	**–**	■	■	■	■	**–**	**Z**
Shaft height 132	**1**	**P**	**H**	**8**	**1**	**3**	**.**	**–**	**3**	■	**.**	■	■	**–**	■	■	■	■	**–**	**Z**
Shaft height 160	**1**	**P**	**H**	**8**	**1**	**6**	**.**	**–**	**3**	■	**.**	■	■	**–**	■	■	■	■	**–**	**Z**

Overall length

Asynchronous version with holding brake[1] — **3**

Encoder systems for motors without DRIVE-CLiQ interface

Without encoder	**A**
Absolute encoder EnDat 2048 S/R (encoder AM2048S/R) with EnDat interface (encoder AM2048S/R)	**E**
Incremental encoder sin/cos 1 V_{pp} 2048 S/R with C and D tracks (encoder IC2048S/R)	**M**

Encoder systems for motors with DRIVE-CLiQ interface

Absolute encoder 22 bit single-turn + 12 bit multi-turn (encoder AM22DQ)	**F**
Incremental encoder 22 bit with commutation position (encoder IC22DQ)	**D**

Rated speed (winding design)

Cooling	**Degree of protection**	
Forced ventilation DE → NDE	IP55	**0**
Forced ventilation NDE → DE	IP55	**1**
Water cooling	IP55[2]	**2**

Type of construction

IM B5 (IM V1, IM V3)[3]	**2**
IM B35 (IM V15, IM V35)[4]	**3**

Shaft extension DE	**Balancing**	
Plain shaft	–	**0**
Feather key	Half-key	**2**

Bearing design	**Vibration severity acc. to Siemens[5]/EN 60034-14**	**Shaft and flange accuracy**	
Standard	A	N	**A**
Advanced Lifetime	A	N	**P**

Power connection[6] (looking at DE)	**Cable entry**	**Signal connection**	
Terminal box top	Right	DE	**A**
Terminal box top	Left	DE	**B**
Terminal box top	NDE	Left	**C**
Terminal box top	DE	Left	**D**
Power connector top[7]	Right	DE	**E**
Power connector top[7]	Left	DE	**F**
Power connector top[7]	NDE	Left	**G**
Power connector top[7]	DE	Left	**H**

Version[8]

Brake versions

Brake supply voltage 230 V 1 AC 50/60 Hz	Holding brake DE	**U60**
	Holding brake DE with micro switch	**U61**
	Holding brake DE with manual brake release lever	**U62**
	Holding brake DE with micro switch and manual brake release lever	**U63**
Brake supply voltage 24 V DC	Holding brake DE	**U65**
	Holding brake DE with micro switch	**U66**
	Holding brake DE with manual brake release lever	**U67**
	Holding brake DE with micro switch and manual brake release lever	**U68**

Z options that cannot be combined with holding brake DE: K18, M03, M39

1) A U option must also be stated in the order to specify the holding brake version.
Shaft height 80: limited to n_{max} = 5000 rpm
Shaft height 100: limited to n_{max} = 5000 rpm
Shaft height 132: limited to n_{max} = 4500 rpm
Shaft height 160: limited to n_{max} = 4000 rpm

2) The degree of protection is limited to IP55 as a result of the holding brake.

3) Not possible with shaft height 160.

4) Not possible with shaft height 80.

5) For a definition of the vibration severity according to Siemens, refer to the 1PH8 Motors Configuration Manual.

6) Holding brake can only be connected at top of terminal box.

7) Power connector for motor only (not with holding brake):
For a shaft height of 100, a power connector is only possible up to a maximum stall current of I_0 = 36 A,
For a shaft height of 132, a power connector is only possible up to a maximum stall current of I_0 = 85 A.
A power connector is not possible for a shaft height 160.

8) Directly coupled to 9th data position.

© Siemens 2022

Selection and ordering data

Data position of the Article No.	1	2	3	4	5	6	7		8	9	10	11	12		13	14	15	16		
Shaft height 80	**1**	**P**	**H**	**8**	**0**	**8**	**.**	**–**	**1**	■	**.**	■	■	**–**	■	■	■	■	**–**	**Z**
Shaft height 100	**1**	**P**	**H**	**8**	**1**	**0**	**.**	**–**	**1**	■	**.**	■	■	**–**	■	■	■	■	**–**	**Z**
Shaft height 132	**1**	**P**	**H**	**8**	**1**	**3**	**.**	**–**	**1**	■	**.**	■	■	**–**	■	■	■	■	**–**	**Z**
Shaft height 160	**1**	**P**	**H**	**8**	**1**	**6**	**.**	**–**	**1**	■	**.**	■	■	**–**	■	■	■	■	**–**	**Z**
Overall length																				
Asynchronous version without brake									**1**											
Encoder systems for motors without DRIVE-CLiQ interface																				
Without encoder										**A**								**2**		
Incremental encoder sin/cos 1 V_{pp} 2048 S/R with C and D tracks (encoder IC2048S/R)[1]										**M**								**2**		
Incremental encoder sin/cos 1 V_{pp} 512 S/R without C and D tracks (encoder IN512S/R)[2]										**T**								**2**		
Incremental encoder sin/cos 1 V_{pp} 256 S/R without C and D tracks (encoder IN256S/R)[3]										**C**								**2**		
Absolute encoder 2048 S/R, 4096 revolutions, multi-turn, with EnDat interface (encoder AM2048S/R)[1]										**E**								**2**		
Encoder systems for motors with DRIVE-CLiQ interface																				
Incremental encoder 22 bit (resolution 4194304, internal 2048 S/R) + commutation position 11 bit (encoder IC22DQ)[1]										**D**								**1**		
Incremental encoder 20 bit (resolution 1048576, internal 512 S/R)[2] without commutation position (encoder IN20DQ)										**U**								**1**		
Incremental encoder 19 bit without commutation position (encoder IN19DQ)[3]										**S**								**1**		
Absolute encoder 22 bit + 12 bit multi-turn (encoder AM22DQ)[1]										**F**								**1**		
Rated speed (winding design)																				
Cooling / **Degree of protection**																				
Forced ventilation DE → NDE / IP55												**0**								
Forced ventilation NDE → DE / IP55												**1**								
Water cooling / IP65												**2**								
Type of construction																				
IM B3 (IM V5, IM V6)													**0**							
IM B5 (IM V1, IM V3) (not possible for 1PH816 and when 14th data position is L or M)													**2**							
IM B35 (IM V15, IM V35) (only possible for 1PH810/1PH813/1PH816)													**3**							
Shaft extension DE / **Balancing**																				
Plain shaft / –															**0**					
Feather key (not possible when 14th data position is M) / Full-key															**1**					
Feather key (not possible when 14th data position is M) / Half-key															**2**					
Plain hollow shaft[3] / –															**3**					
Bearing design / **Vibration severity acc. to Siemens[4]/EN 60034-14** / **Shaft and flange accuracy**																				
Standard with locating bearing[8] / R/A / R																**B**				
Standard with locating bearing[8] / S/A / R																**C**				
Standard with locating bearing[8] / SR/A / R																**D**				
Standard[8] / R/A / R																**G**				
Standard[8] / S/A / R																**H**				
Increased radial forces[8] / R/A / R																**F**				
Performance[5][6] / SPECIAL/B / SPECIAL																**L**				
High Performance[6][7] / SPECIAL/B / SPECIAL																**M**				
Advanced Lifetime[8][9] / S/A / R																**Q**				
Power connection (looking at DE) / **Cable entry** / **Signal connection**																				
Terminal box top / Right / DE																	**A**			
Terminal box top / Left / DE																	**B**			
Terminal box top / NDE / Left																	**C**			
Terminal box top / DE / Left																	**D**			
Power connector top[8][10] / Right / DE																	**E**			
Power connector top[8][10] / Left / DE																	**F**			
Power connector top[8][10] / NDE / Left																	**G**			
Power connector top[8][10] / DE / Right																	**H**			
Version[11]																				
Special version (order codes required for options)																				**Z**

[1] Limited to n_{max} = 12000 rpm.

[2] Limited to n_{max} = 15000 rpm.

[3] Only possible when 14th data position is L or M, and 9th data position is C or S.

[4] For definition of the vibration severity according to Siemens, see 1PH8 Motors Configuration Manual.

[5] For 1PH808 limited to n_{max} = 15000 rpm.
For 1PH810 limited to n_{max} = 12000 rpm.
For 1PH813 limited to n_{max} = 10000 rpm.
For 1PH816 limited to n_{max} = 9000 rpm.

[6] Not possible for 1PH816 when 12th data position is 2 (type of construction IM B5).

[7] For 1PH808 limited to n_{max} = 20000 rpm. For 1PH810 limited to n_{max} = 18000 rpm. For 1PH813 limited to n_{max} = 15000 rpm.
For 1PH816 limited to n_{max} = 10000 rpm.

[8] Not possible when 9th data position is T, U.

[9] For 1PH808/1PH810 limited to n_{max} = 5000 rpm.
For 1PH813 limited to n_{max} = 4500 rpm.
For 1PH816 limited to n_{max} = 4000 rpm.

[10] Power connector for 1PH810 is only possible up to a maximum stall current of I_0 = 36 A.
Power connector for 1PH813 is only possible up to a maximum stall current of I_0 = 85 A. Power connector not possible for 1PH816.

[11] Directly coupled to 9th data position.

© Siemens 2022

Selection and ordering data

Data position of the Article No.	1	2	3	4	5	6	7		8	9	10	11	12		13	14	15	16		
Shaft height 180	**1**	**P**	**H**	**8**	**1**	**8**	**.**	**–**	**3**	■	**.**	■	■	**–**	■	■	■	■	**–**	**Z**
Shaft height 225	**1**	**P**	**H**	**8**	**2**	**2**	**.**	**–**	**3**	■	**.**	■	■	**–**	■	■	■	■	**–**	**Z**
Overall length																				
Asynchronous version with holding brake[1]									**3**											
Encoder systems for motors without DRIVE-CLiQ interface																				
Without encoder										**A**								**2**		
Absolute encoder EnDat 2048 S/R (encoder AM2048S/R)										**E**								**2**		
Incremental encoder sin/cos 1 V_{pp} 2048 S/R with C and D tracks (encoder IC2048S/R)										**M**								**2**		
Encoder systems for motors with DRIVE-CLiQ interface																				
Absolute encoder 22 bit single-turn + 12 bit multi-turn (encoder AM22DQ)										**F**								**1**		
Incremental encoder 22 bit with commutation position (encoder IC22DQ)										**D**								**1**		
Rated speed (winding design)																				
Cooling		**Degree of protection**																		
Forced ventilation DE → NDE		IP55										**0**								
Forced ventilation NDE → DE		IP55										**1**								
Water cooling		IP55										**2**								
Type of construction																				
IM B3 (IM B6, IM B7, IM B8)													**0**							
Shaft extension DE		**Balancing**																		
Feather key		Half-key													**2**					
Bearing design		**Vibration severity acc. to Siemens[2]/EN 60034-14**							**Shaft and flange accuracy**											
Standard		A							N							**A**				
Power connection[3] (looking at DE)		**Cable entry**							**Signal connection**											
Terminal box top		Right							DE								**A**			
Terminal box top		Left							DE								**B**			
Terminal box top		NDE							Left								**C**			
Terminal box top		DE							Right								**D**			
Version[4]																				
Brake versions																				
Brake supply voltage 230 V 1 AC 50/60 Hz		Holding brake DE with micro switch and manual brake release lever																		**U63**
Z options that cannot be combined with holding brake DE: K18, K90, L03, V92, M39																				

[1] A U option must also be stated in the order to specify the holding brake version.
Shaft height 180: limited to n_{max} = 3500 rpm
Shaft height 225: limited to n_{max} = 3100 rpm

[2] For a definition of the vibration severity according to Siemens, refer to the 1PH8 Motors Configuration Manual.

[3] Holding brake can only be connected at top of terminal box.

[4] Directly coupled to 9th data position.

© Siemens 2022

Selection and ordering data

Data position of the Article No.	1	2	3	4	5	6	7		8	9	10	11	12		13	14	15	16		
Shaft height 180	**1**	**P**	**H**	**8**	**1**	**8**	**.**	**–**	**1**	■	**.**	■	■	**–**	■	■	■	■	**–**	**Z**
Shaft height 225	**1**	**P**	**H**	**8**	**2**	**2**	**.**	**–**	**1**	■	**.**	■	■	**–**	■	■	■	■	**–**	**Z**
Shaft height 280 (only water cooling)	**1**	**P**	**H**	**8**	**2**	**8**	**.**	**–**	**1**	■	**.**	**2**	■	**–**	■	■	■	■	**–**	**Z**

Overall length

Asynchronous version without brake: **1**

Encoder systems for motors without DRIVE-CLiQ interface

Without encoder	**A**
Incremental encoder sin/cos 1 V_{pp} 2048 S/R with C and D tracks (encoder IC2048S/R)	**M**
Absolute encoder 2048 S/R, 4096 revolutions, multi-turn, with EnDat interface (encoder AM2048S/R)	**E**

Encoder systems for motors with DRIVE-CLiQ interface

Incremental encoder 22 bit (resolution 4194304, internal 2048 S/R) + commutation position 11 bit (encoder IC22DQ)	**D**
Absolute encoder 22 bit + 12 bit multi-turn (encoder AM22DQ)	**F**

Rated speed (winding design)

Cooling	**Degree of protection**	
Forced ventilation DE → NDE	IP55	**0**
Forced ventilation NDE → DE	IP55	**1**
Water cooling	IP55	**2**

Type of construction

1PH818	1PH822	1PH828	
• IM B3 (IM B6/IM B7/ IM B8/IM V6)	• IM B3 (IM B6/IM B7/ IM B8/IM V6)	• IM B3 (IM V6)	**0**
• IM V5	• IM V5	• IM V5[4]	**1**
• IM B5 with flange A450 (IM V3)[1]	• IM B5 with flange A550 (IM V3)[2]	• IM B5 with flange A660 (IM V3)[3][4]	**2**
• IM B35 with flange A450 (IM V35)	• IM B35 with flange A550 (IM V35)	• IM B35 with flange A660 (IM V35)	**3**
• IM V15 with flange A450	• IM V15 with flange A550	• IM V15 with flange A660[4]	**5**

Shaft extension DE	**Balancing**	
Plain shaft	–	**0**
Feather key	Full-key	**1**
Feather key	Half-key	**2**

Bearing design	**Vibration severity acc. to Siemens[5]/EN 60034-14**	**Shaft and flange accuracy**	
Standard	R/A	R	**B**
Increased radial forces	R/A	R	**F**
Also possible with 1PH818/1PH822:			
Standard	S/A	R	**C**
Standard	SR/A	R	**D**
Performance[6]	SR/A	R	**L**

Power connection (looking at DE)	**Cable entry**	**Signal connection**	
Terminal box top	Right	DE	**A**
Terminal box top	Left	DE	**B**
Terminal box top	NDE	Right	**C**
Terminal box top	DE	Right	**D**

Version[7]

Special version (order codes required for options): **Z**

[1] Limited to n_{max} = 3000 rpm. Not possible when 14th data position is L (Performance bearings).
[2] Limited to n_{max} = 2500 rpm. Not possible when 14th data position is L (Performance bearings).
[3] Limited to n_{max} = 2000 rpm.
[4] Only possible when 14th data position is B (Standard bearings).
[5] For definition of the vibration severity according to Siemens, see 1PH8 Motors Configuration Manual.
[6] For 1PH818 limited to n_{max} = 7500 rpm. Not possible when 12th data position is 2 (type of construction IM B5).
For 1PH822 limited to n_{max} = 6000 rpm. Not possible when 12th data position is 2 (type of construction IM B5).
[7] Directly coupled to 9th data position.

© Siemens 2022

Selection and ordering data

Data position of the Article No.	1	2	3	4	5	6	7		8	9	10	11	12		13	14	15	16		
Shaft height 280 (only forced ventilation)	**1**	**P**	**H**	**8**	**2**	**8**	**.**	**–**	**1**	■	**.**	**1**	■	**–**	■	■	■	■	**–**	**Z**
Overall length																				
Asynchronous version without brake									**1**											
Encoder systems for motors without DRIVE-CLiQ interface																				
Without encoder										**A**								**2**		
Incremental encoder sin/cos 1 V_{pp} 2048 S/R with C and D tracks (encoder IC2048S/R)										**M**								**2**		
Absolute encoder 2048 S/R, 4096 revolutions, multi-turn, with EnDat interface (encoder AM2048S/R)										**E**								**2**		
Encoder systems for motors with DRIVE-CLiQ interface																				
Incremental encoder 22 bit (resolution 4194304, internal 2048 S/R) + commutation position 11 bit (encoder IC22DQ)										**D**								**1**		
Absolute encoder 22 bit + 12 bit multi-turn (encoder AM22DQ)										**F**								**1**		
Rated speed (winding design)																				
Cooling	**Degree of protection**																			
Forced ventilation	IP55											**1**								
Type of construction																				
IM B3 (IM V6)													**0**							
IM V5[1]													**1**							
IM B5 with flange A660 (IM V3)[1]													**2**							
IM B35 with flange A660 (IM V35)													**3**							
IM V15 with flange A660[1]													**5**							
Shaft extension DE	**Balancing**																			
Plain shaft	–														**0**					
Feather key	Full-key														**1**					
Feather key	Half-key														**2**					
Bearing design	**Vibration severity acc. to Siemens[2]/EN 60034-14**								**Shaft and flange accuracy**											
Standard	R/A								R							**B**				
Increased radial forces	R/A								R							**F**				
Power connection (looking at DE)	**Cable entry**		**Signal connection**				**External fan NDE** Air inlet from NDE, air-flow direction NDE → DE													
Terminal box NDE right	Bottom		DE				Top										**U**			
							Left		(order code **G00** required)								**U**		**–**	**Z**
Terminal box NDE left	Bottom		DE				Top										**V**			
							Right		(order code **G02** required)								**V**		**–**	**Z**
Terminal box NDE top	Right		DE				Left		(order code **G00** required)								**W**		**–**	**Z**
							Right		(order code **G02** required)								**W**		**–**	**Z**
Terminal box DE top[3]	Right		NDE				Top[3][4]										**X**			
							Left[3]		(order code **G00** required)								**X**		**–**	**Z**
							Right[3]		(order code **G02** required)								**X**		**–**	**Z**
Version[5]																				
Special version (order codes required for options)																				**Z**

[1] Only possible when 14th data position is B (Standard bearings).
[2] For definition of the vibration severity according to Siemens, see 1PH8 Motors Configuration Manual.
[3] Only possible when 12th data position is 0 (type of construction IM B3) or 1 (type of construction IM V5).
[4] Only possible for assignment with terminal box 1XB7712-P..
[5] Directly coupled to 9th data position.

© Siemens 2022

Options

Order code	Option description When ordering a motor with options, **-Z** must be added to the Article No. The order code must also be stated for each required option. Note: Order codes must not be repeated in plain text in the order.	For use with motors Shaft height 80 to 160	Shaft height 180 to 225 Shaft height 280 for water cooling only (11th data position 2)	Shaft height 280 for forced ventilation only (11th data position 1)
A12	Additional PTC thermistor chain for alarm and tripping (Only possible for version with terminal box)	✔	✔	✔
A25	Additional temperature sensor as reserve connected to signal terminal strip (Only possible for version with terminal box)	✔	Standard	Standard
B02	Test certificate (for ordered motor)	✔	Standard	Standard
B35	Factory test certificate for vibration log	✔	✔ [1]	✔ [1]
B36	Factory test certificate for run-out log	✔	Only for SH 180 and SH 225	–
G00	External fan NDE left, air inlet at NDE (possible if 15th data position is U, W or X)	–	–	✔
G02	External fan NDE right, air inlet at NDE (possible if 15th data position is V, W or X)	–	–	✔
G06	External fan DE left, air inlet at NDE (possible if 15th data position is U, V or W)	–	–	✔
G07	External fan DE left, air inlet at DE (possible if 15th data position is U, V or W)	–	–	✔
G08	External fan DE right, air inlet at NDE (possible if 15th data position is U, V or W)	–	–	✔
G09	External fan DE right, air inlet at DE (possible if 15th data position is U, V or W)	–	–	✔
G11	External fan DE top, air inlet at DE (possible if 15th data position is U, V or W)	–	–	✔
G14	With air filter (only possible if 11th data position is 1)	Only for SH 132 and SH 160	✔	✔
G50	M8 thread for sensor mounting (e.g. acceleration sensor for bearing condition monitoring)	–	–	✔
K08	Encoder connection or DRIVE-CLiQ mounted opposite (not possible if 15th data position is X)	–	✔	✔
K09	Terminal box or power connector NDE on the right	Only for SH 100 [1] to SH 160	–	–
	Terminal box NDE right, cable entry DE, signal connection top (possible if 15th data position is A)	–	✔	–
K10	Terminal box or power connector NDE on the left	Only for SH 100 [1] to SH 160	–	–
	Terminal box NDE left, cable entry DE, signal connection top (possible if 15th data position is A)	–	✔	–
K16	Second shaft extension (SH 280 d × l: 95 mm × 170 mm (3.74 in × 6.69 in) (possible if 9th data position is A and 12th data position is 0 or 3)	–	–	✔
K17	Labyrinth seal DE for Performance bearings (14th data position is L)	–	Only for SH 180	–
K18	Radial shaft sealing ring DE[2] (not possible for version with holding brake)	✔	✔	–
K40	Regreasing system, DE and NDE	–	Only for SH 180 and SH 225	Standard
K45	Anti-condensation heating 230 V AC	–	✔	✔
K69	Pipe connection prepared NDE right (only possible with forced ventilation, not with G00, G02, G06, G07, G08, G09, G11, G14 and L02)	–	–	✔
K70	Pipe connection prepared NDE left (only possible with forced ventilation, not with G00, G02, G06, G07, G08, G09, G11, G14 and L02)	–	–	✔
K71	Pipe connection prepared NDE top (only possible with forced ventilation, not with G00, G02, G06, G07, G08, G09, G11, G14 and L02)	–	–	✔
K80	Axial pipe connection NDE (only possible with forced ventilation)	✔	Only for SH 180 and SH 225	Options K69, K70, K71
K83	Rotation of terminal box by +90 degrees (possible in combination with Option K09 or K10 or if 15th data position is U, V or W)	–	✔ [3]	✔
K84	Rotation of terminal box by -90 degrees (possible in combination with Options K09 or K10 or if 15th data position is U, V, W or X)	–	✔ [3]	✔
K85	Rotation of terminal box by +180 degrees (possible in combination with Options K09 or K10 or if 15th data position is U, V, W or X)	–	✔	✔
K90	Version with flange size A400 (possible if 12th data position is 2, 3 or 5)	–	Only for SH 180	–

✔	Option available
–	Option not possible

[1] Not possible when 14th data position is F.

[2] Only appropriate if oil spray or oil vapor is occasionally deposited on the sealing ring. Radial shaft sealing ring not possible when: 14th data position is E, F, L, M or N

[3] Not possible with 1PH822 and terminal box 1XB7712-P03

© Siemens 2022

Options

Order code	Option description When ordering a motor with options, **-Z** must be added to the Article No. The order code must also be stated for each required option. Note: Order codes must not be repeated in plain text in the order.	For use with motors Shaft height 80 to 160	Shaft height 180 to 225 Shaft height 280 for water cooling only (11th data position 2)	Shaft height 280 for forced ventilation only (11th data position 1)
L00	Replace terminal box (standard) with the next larger terminal box (note dimension implications in the DT Configurator!)	–	✔	✔
L02	Screws locked with Loctite and reinforced fan version		–	✔
L03	Increased vibration stress (For SH 180 and SH 225 only for type of construction IM B3; 12th data position is 0)	–	Only for SH 180 and SH 225	–
L12	Condensation drain hole	–	✔ [1]	✔
L27	NDE bearing in insulated version	–	Only for SH 180	Standard
L29	Enhanced corrosion protection for installation in industrial/marine climates	–	–	✔
L37	Increased maximum speed (SH 80: 12000 rpm, SH 100: 10000 rpm)	Only for SH 80 and SH 100 [2]	–	–
L72	Shaft made of special steel	–	–	✔
L74	Fan version with IP65 degree of protection [3]	✔	–	–
M03	Version for potentially explosive atmospheres Zone 2 [4]	✔	–	–
M39	Version for potentially explosive atmospheres Zone 22 [4]	✔	Only for SH 180 and SH 225	–
M83	Additional back-off thread on motor feet (only possible if 12th data position is 0 or 3)	–	–	✔
P00	Undrilled cable entry plate	–	✔	✔
P01	Cable entry plate 3 × M63 × 1.5	–	Only for 1XB7700-P02 1XB7712-P03	Only for 1XB7712-P03
P02	Cable entry plate 3 × M75 × 1.5	–	Only for 1XB7712-P03	Only for 1XB7712-P01 1XB7712-P03
P03	Cable entry plate 4 × M75 × 1.5	–	–	Only for 1XB7712-P01
P04	Cable entry plate 4 × M63 × 1.5	–	Only for 1XB7712-P03	Only for 1XB7712-P01 1XB7712-P03
Q00	Extra grounding terminals in terminal box	–	–	✔
Q12	M5 sealing air connection	✔	–	–
Q21	Screws locked with Loctite	–	✔	–
Q31	Metal rating plate instead of adhesive label	✔	✔	✔
Q52	Flange for design IM B5 with 4 x M8 threaded holes (only possible when 14th data position is N)	Only for SH 80	–	–
Q81	Higher preloading of bearing	✔		

✔	Option available
–	Option not possible

[1] Standard for water-cooled motors.
[2] Only possible if 9th data position is E, M, F and D and 14th data position is D.
[3] Regardless of the degree of protection, at high levels of atmospheric pollution, the fan must be cleaned.
[4] Only with direction of air flow NDE → DE (11th data position 1).

© Siemens 2022

Options

Order code	Option description When ordering a motor with options, **-Z** must be added to the Article No. The order code must also be stated for each required option. Note: Order codes must not be repeated in plain text in the order.	For use with motors Shaft height 80 to 160	Shaft height 180 to 280	Shaft height 280 for forced ventilation only (11th data position 1)
U60	Holding brake 230 V	✔	–	–
U61	Holding brake 230 V with microswitch	✔	–	–
U62	Holding brake 230 V with manual brake release lever	✔	–	–
U63	Holding brake 230 V with microswitch and manual brake release lever	✔	Only for SH 180 and SH 225	–
U65	Holding brake 24 V DC	✔	–	–
U66	Holding brake 24 V DC with microswitch	✔	–	–
U67	Holding brake 24 V DC with manual brake release lever	✔	–	–
U68	Holding brake 24 V DC with microswitch and manual brake release lever	✔	–	–
V90	1PH7-compatible shaft extension ($d \times l$: 42 mm × 110 mm (1.65 in × 4.33 in)) (note reduced radial forces!)	Only for SH 132	–	–
V92	1PH7184-/1PL6184-compatible shaft extension ($d \times l$: 60 mm × 140 mm (2.36 in × 5.51 in))	–	Only for 1PH8184	–
Y64	Hollow shaft prepared for bearing-free rotary unions with flange diameter 114 H6	✔	–	–
Y82	Extra rating plate with order data (plain text required)	–	✔	✔
Y84	Customer specifications on rating plate (max. 30 characters)	✔	✔	✔
–	Paint finish: Anthracite RAL 7016	Standard	Standard	Standard
X01	Paint finish in RAL 9005 (jet black)	✔	✔	✔
X02	Paint finish in RAL 9001 (cream white)	✔	✔	✔
X03	Paint finish in RAL 6011 (reseda green)	✔	✔	✔
X04	Paint finish in RAL 7032 (pebble gray)	✔	✔	✔
X05	Paint finish in RAL 5015 (sky blue)	✔	✔	✔
X06	Paint finish in RAL 1015 (light ivory)	✔	✔	✔
X08	Paint finish in RAL 9006 (white aluminum)	✔	✔	✔
K24	Primer	Pale green	Red brown	Red brown
K23	Special paint finish “Worldwide” (anthracite RAL 7016)	✔	✔	✔
K23 + X..	Special finish “Worldwide” in another color (X01 to X08)	✔	✔	✔

✔	Option available
–	Option not possible

© Siemens 2022

Options

Terminal box type (See selection and ordering data for assignment)	Cable entry Power	External signals	Outer cable diameter, max.[1] mm (in)	Number of main terminals	Cross-section per terminal, max. mm²	Rated current, max.[2] A
gk803	1 × M25 × 1.5	1 × M16 × 1.5[3]	20 (0.79)	Phases: 3 × M5 Grounding: 2 × M5	1 × 10	52
gk813	1 × M32 × 1.5	1 × M16 × 1.5[3]	24.2 (0.95)	Phases: 3 × M5 Grounding: 2 × M5	1 × 16	70
gk823	1 × M32 × 1.5	1 × M16 × 1.5[3]	24.2 (0.95)	Phases: 3 × M5 Grounding: 2 × M5	1 × 16	70
gk826	1 × M32 × 1.5	1 × M16 × 1.5[3]	24.2 (0.95)	Phases: 6 × M5 Grounding: 2 × M5	1 × 10	52
gk833	1 × M40 × 1.5	1 × M16 × 1.5[3]	32 (1.26)	Phases: 3 × M6 Grounding: 2 × M6	1 × 35	110
gk843	1 × M50 × 1.5	1 × M16 × 1.5[3]	38 (1.50)	Phases: 3 × M6 Grounding: 2 × M6	1 × 50	133
gk846	1 × M50 × 1.5	1 × M16 × 1.5[3]	38 (1.50)	Phases: 6 × M6 Grounding: 2 × M6	1 × 25	88
gk863	1 × M50 × 1.5	1 × M16 × 1.5[3]	38 (1.50)	Phases: 3 × M6 Grounding: 2 × M6	1 × 50	133
gk873	1 × M63 × 1.5	1 × M16 × 1.5[3]	42.6 (1.68)	Phases: 3 × M6 Grounding: 2 × M6	1 × 50	133
1XB7322-P05	2 × M50 × 1.5	1 × M16 × 1.5[4]	38 (1.50)	Phases: 3 × M12 Grounding: 2 × M6	2 × 50	210
1XB7422-P06	2 × M63 × 1.5	1 × M16 × 1.5[4]	53 (2.09)	Phases: 3 × M12 Grounding: 4 × M8	2 × 70	270
1XB7700-P02	3 × M75 × 1.5	1 × M16 × 1.5[4]	68 (2.68)	Phases: 3 × 2 × M12 Grounding: 3 × fixing eyelet	3 × 150	700
1XB7712-P03	4 × M75 × 1.5	1 × M16 × 1.5[4]	68 (2.68)	Phases: 3 × 4 × M16 Grounding: 4 × M16	4 × 185	1150

For terminal box type **1XB7712-P01** or **1XB7712-P03**, other cable entries (power) can be ordered via P options, depending on the standard:

P00	Undrilled cable entry plate
P01	Cable entry plate 3 × M63 × 1.5 (not for 1XB7712-P01)
P02	Cable entry plate 3 × M75 × 1.5
P03	Cable entry plate 4 × M75 × 1.5 (not for 1XB7712-P03)
P04	Cable entry plate 4 × M63 × 1.5

For terminal box type **1XB7700-P02** , other cable entries (power) can be ordered via P options depending on the standard:

P00	Undrilled cable entry plate
P01	Cable entry plate 3 × M63 × 1.5

For terminal box types **1XB7322-P05** and **1XB7422-P06**, another cable entry (power) can be ordered via the P option depending on the standard:

P00	Undrilled cable entry plate

With option **K09** or **K10**, terminal box **gk873** mounted on the side is used instead of terminal box **gk863**.

With option **K09** or **K10**, terminal box **gk843** mounted on the side is used instead of terminal box **gk833**.

With option **K09** or **K10**, terminal box **gk823** mounted on the side is used instead of terminal box **gk813**.

[1] Dependent on the design of the metric cable gland.
[2] Current-carrying capacity based on EN 60204-1/IEC 60364-5-52 with installation type E.
[3] Thread M16 × 1.5 arranged at 90° to signal connection; thread only with options A12, A25 and when 9th data position is A (without encoder).
[4] Thread M16 × 1.5 arranged opposite the signal connection (sideways to the cable entry plate); thread only with option A12 and when 9th data position is A (without encoder).

© Siemens 2022

Overview

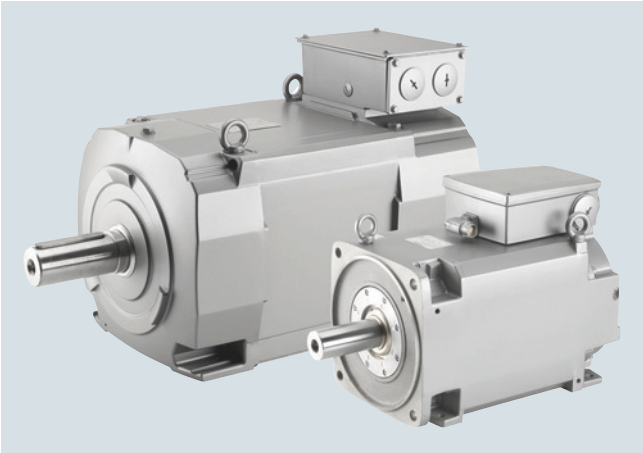

SIMOTICS M-1PH8 motors are compact permanent-magnet synchronous motors with IP55/IP65 degree of protection. The motors are available in different cooling types:

- Forced ventilation for SH 132 to SH 225
- Water cooling for SH 132 to SH 225

The motors have been designed specifically for use in conjunction with the SINAMICS S120 drive system. Depending on the control requirements, appropriate encoder systems are available for the motors for sensing the motor speed and indirect position.

Benefits

- Wide range of power ratings
- Different bearing designs
- Different encoder types for speed control and high-precision positioning
- Outstanding performance properties
  - Excellent rotational accuracy
  - Excellent vibration severity
  - High dynamic response (short ramp-up times)
- Low noise emissions
- Simple and flexible connection system
- Commissioning with electronic rating plate and DRIVE-CLiQ interface

Application

- As feed motors in machine tools
- Machines with high requirements in terms of dynamic performance and precision, e.g.:
  - Packaging machines
  - Servo presses
  - Printing machines
  - Cross cutters

More information

For further configuration information, see the 1PH8 Motors Configuration Manual.

If you are using a Smart Line Module, proceed in accordance with the 1PH8 Motors Configuration Manual.

Characteristic curves

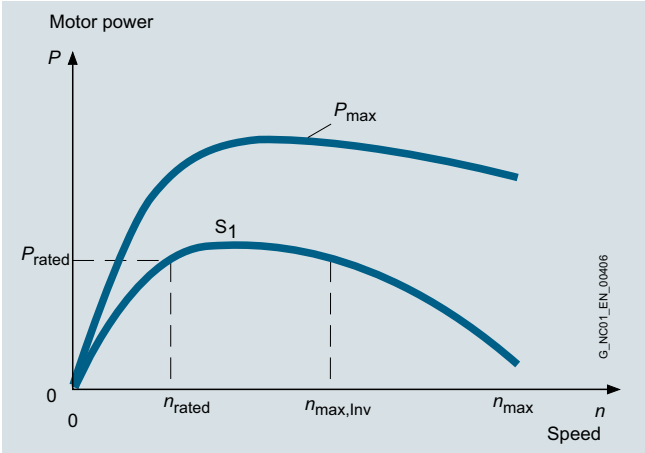

Typical speed/power graph for synchronous motors SIMOTICS M-1PH8

The graph shows the typical relationship between motor speed and drive power for SIMOTICS M-1PH8 motors for duty type S1 (continuous duty) in accordance with IEC 60034-1.

Data for short-time duty S2 and continuous duty S6 is listed in the 1PH8 Motors Configuration Manual.

Configuration

Ordering example

Selection criteria	Design	Structure of the Article No.
1PH8 motor	Shaft height 132 Version 2	**1PH8131- . . . . . - . . . 2**
	Synchronous version without brake	**1PH8131-2 . . . . - . . . 2**
Encoder system	Incremental encoder sin/cos 1 V_{pp} 2048 S/R with C and D tracks (encoder IC2048S/R)	**1PH8131-2M . . .- . . . 2**
Cooling	Water cooling	**1PH8131-2M . 2 . - . . . 2**
Rated speed	1750 rpm	**1PH8131-2MF2 . - . . . 2**
Rated power	20.4 kW	
Type of construction	IM B3 (IM V5, IM V6)	**1PH8131-2MF20- . . . 2**
Shaft extension DE	Plain shaft	**1PH8131-2MF20-0 . . 2**
Bearing design	Standard Vibration severity R/A Shaft and flange accuracy R	**1PH8131-2MF20-0B . 2**
Connection	Power connection at top of terminal box Cable entry on the right Signal connection at DE	**1PH8131-2MF20-0BA2**
Options		**1PH8131-2MF20-0BA2-Z**
	Additional PTC thermistor chain for alarm and tripping	**1PH8131-2MF20-0BA2-Z A12**
	Special paint finish, worldwide: Primer and other paint finish sky blue RAL 5015	**1PH8131-2MF20-0BA-Z A12 K23 X05**

© Siemens 2022

Technical specifications

Product name	SIMOTICS M-1PH8		
Cooling	Forced ventilation	Water cooling	
• Cooling water pressure at inlet, max.	–	6 bar	
		Cooling water flow rate	Connection thread at NDE[1]
- 1PH813	–	12 l/min (3.17 US gallons/min.)	G 3/8"
- 1PH816	–	15 l/min (3.96 US gallons/min.)	G 1/2"
- 1PH818	–	15 l/min (3.96 US gallons/min.)	G 3/8"
- 1PH822	–	25 l/min (6.61 US gallons/min.)	G 3/8"
Ambient temperature, permissible	-15 ... +40 °C (5 ... 104 °F)[2]		
Coolant inlet temperature	–	< 30 °C (86 °F)	
Temperature monitoring	Temperature sensor in stator winding		
• 1PH818/1PH822	Additional temperature sensor as reserve		
Stator winding insulation in accordance with EN 60034-1 (IEC 60034-1)	For an ambient temperature of up to 40 °C (104 °F) Temperature class 180 (H)[3]		
Fan supply voltage			
• 1PH813/1PH816	400 V 3 AC ± 10%, 50/60 Hz 480 V 3 AC ± 10%, 60 Hz		
• 1PH818/1PH822	200 V ... 277 V 1 AC 50/60 Hz (EC fan) 380 V ... 480 V 3 AC 50/60 Hz (-5% / +10%) (EC fan) option L76		
Encoder system, built-in	Without DRIVE-CLiQ interface or with DRIVE-CLiQ interface		
Sound pressure level L_{pA} (1 m) in accordance with EN ISO 1680 tolerance + 3 dB			
• 1PH813	70 dB[4]	68 dB[4]	
• 1PH816	73 dB[4]	69 dB[4]	
• 1PH818/1PH822	73 dB[5]	70 dB[5]	
Connection			
• 1PH813	Power connector or terminal box		
• 1PH816 to 1PH822	Terminal box	Terminal box	
• Fan for 1PH813	Power connector or terminal box	–	
• Fan for 1PH816 to 1PH822	Terminal box	–	
• Encoder system	Connector for signals (without mating connector) or DRIVE-CLiQ		
Vibration severity	In accordance with Siemens/EN 60034-14 (IEC 60034-14)		
Shaft and flange accuracy in accordance with DIN 42955 (IEC 60072-1)[6]	Tolerance R		
Degree of protection in accordance with EN 60034-5 (IEC 60034-5)			
• 1PH813/1PH816	IP55	IP65	
• 1PH818/1PH822	IP55	IP55	
• Fans	IP55, option L74: IP65[7]	–	
Rating plate	1 unit attached to motor 1 supplied loose in terminal box		
Paint finish	Anthracite RAL 7016		
Certificate of suitability	cURus		

[1] DE is the drive end with shaft. NDE is the non-drive end.

[2] The ambient temperature for water-cooled systems should be 5 K higher than the coolant inlet temperature in order to prevent condensation.

[3] The following motors are designed to conform to temperature class 155 (F):
1PH8138-2.F2/1PH8138-2.G2
1PH8164/1PH8166/1PH8168

[4] Rated pulse frequency 4 kHz and speed range up to 5000 rpm.

[5] Rated pulse frequency 4 kHz or 2 kHz and speed range up to 3800 rpm (1PH818) or 3500 rpm (1PH822).

[6] Concentricity of the shaft end, coaxiality of spigot and shaft, and axial runout of the mounting flanges to the axis of the shaft end.

[7] L74 for 1PH813 and 1PH816.

© Siemens 2022

Selection and ordering data

Rated speed	Speed, max.[1]	Operating speed, max.[2]	Rated power S1 duty	Rated torque S1 duty	Static torque	**SIMOTICS M-1PH8 synchronous motors**
n_{rated}	n_{max}	$n_{max, Inv}$	P_{rated}	M_{rated}	M_0	
rpm	rpm	rpm	kW (hp)	Nm (lb_f-ft)	Nm (lb_f-ft)	Article No.
Shaft height 132 – Forced ventilation – Line voltage 400 V 3 AC, operation on Active Line Module						
1750	4500	2550	18.0 (24.14)	98 (72.3)	105 (77.4)	**1PH8131-■■F■■-■■■1**
2800	4500	4050	27.7 (37.15)	95 (70.1)	105 (77.4)	**1PH8131-■■L■■-■■■1**
1750	4500	3050	23.1 (30.98)	126 (92.9)	131 (96.6)	**1PH8133-■■F■■-■■■1**
2800	4500	3950	35.2 (47.2)	120 (88.5)	131 (96.6)	**1PH8133-■■L■■-■■■1**
1750	4500	2450	27.2 (36.48)	149 (110)	158 (117)	**1PH8135-■■F■■-■■■1**
2300	4500	3500	35.6 (47.74)	148 (109)	158 (117)	**1PH8135-■■G■■-■■■1**
1750	4500	2700	35.6 (47.74)	194 (143)	203 (150)	**1PH8137-■■F■■-■■■1**
2800	4500	3900	53.4 (71.61)	182 (134)	203 (150)	**1PH8137-■■L■■-■■■1**
3300	4500	4500	62.2 (83.41)	180 (133)	203 (150)	**1PH8137-■■M■■-■■■1**
Shaft height 132 – Water cooling – Line voltage 400 V 3 AC, operation on Active Line Module						
1750	4500	3150	20.4 (27.36)	112 (82.6)	115 (84.8)	**1PH8131-■■F2■-■■■1**
2800	4500	4500	31.7 (42.51)	108 (79.7)	115 (84.8)	**1PH8131-■■L2■-■■■1**
1750	4500	2450	26.4 (35.40)	144 (106)	155 (114)	**1PH8133-■■F2■-■■■1**
2300	4500	3450	34.9 (46.80)	145 (107)	155 (114)	**1PH8133-■■G2■-■■■1**
1750	4500	2650	34.1 (45.7)	186 (137)	196 (145)	**1PH8135-■■F2■-■■■1**
2300	4500	3800	44.3 (59.41)	184 (136)	196 (145)	**1PH8135-■■G2■-■■■1**
1750	4500	2350	37.0 (49.62)	202 (149)	226 (167)	**1PH8137-■■F2■-■■■1**
2300	4500	3500	50.5 (67.72)	212 (156)	226 (167)	**1PH8137-■■G2■-■■■1**
1750	4500	3500	52.4 (70.27)	286 (211)	290 (214)	**1PH8138-■■F2■-■■■1**
2300	4500	3900	67.7 (90.79)	281 (207)	290 (214)	**1PH8138-■■G2■-■■■1**

For versions, see Article No. supplements and options.

[1] Maximum permissible speed, also applies to versions with holding brake.

[2] Maximum permissible operating speed based on the voltage induced in the motor and the voltage strength of the Motor Module (without protective circuit).

© Siemens 2022

Motor type (repeated)	Efficiency	Moment of inertia without holding brake	Weight, approx. without holding brake	Rated current S1 duty	Stall current S1 duty	Terminal box	**SINAMICS S120 Motor Module** Rated output current[3] S1 duty	**Booksize format** Internal air cooling For further components, see SINAMICS S120 drive system
	η	J	m	I_{rated}	I_0		I_{rated}	
	%	kgm² (lbf-in-s²)	kg (lb)	A	A	Type	A	Article No.
1PH8131-2.F...	94.7	0.0446 (0.39)	85 (187)	29	30	gk833	30	**6SL3120-1TE23-0A■0**
1PH8131-2.L...	94.9	0.0446 (0.39)	85 (187)	44	48	gk833	45	**6SL3120-1TE24-5AC0**
1PH8133-2.F...	95.0	0.0600 (0.53)	103 (227)	43	45	gk833	45	**6SL3120-1TE24-5AC0**
1PH8133-2.L...	95.2	0.0600 (0.53)	103 (227)	54	59	gk833	60	**6SL3120-1TE26-0AC0**
1PH8135-2.F...	95.2	0.0750 (0.66)	120 (265)	42	44	gk833	45	**6SL3120-1TE24-5AC0**
1PH8135-2.G...	95.3	0.0750 (0.66)	120 (265)	59	63	gk833	60	**6SL3120-1TE26-0AC0**
1PH8137-2.F...	95.3	0.0885 (0.78)	136 (300)	59	62	gk833	60	**6SL3120-1TE26-0AC0**
1PH8137-2.L...	95.3	0.0885 (0.78)	136 (300)	82	89[4]	gk833	85	**6SL3120-1TE28-5AA3**
1PH8137-2.M...	95.2	0.0885 (0.78)	136 (300)	102	115[4]	gk833	132	**6SL3120-1TE31-3AA3**
1PH8131-2.F2...	94.7	0.0446 (0.39)	102 (225)	40	41	gk843	45	**6SL3120-1TE24-5AC0**
1PH8131-2.L2...	94.9	0.0446 (0.39)	102 (225)	56	60	gk843	60	**6SL3120-1TE26-0AC0**
1PH8133-2.F2...	94.8	0.0600 (0.53)	120 (265)	42	43	gk843	45	**6SL3120-1TE24-5AC0**
1PH8133-2.G2...	95.1	0.0600 (0.53)	120 (265)	57	61	gk843	60	**6SL3120-1TE26-0AC0**
1PH8135-2.F2...	95.1	0.0750 (0.66)	138 (304)	56	59	gk843	60	**6SL3120-1TE26-0AC0**
1PH8135-2.G2...	95.2	0.0750 (0.66)	138 (304)	80	85[4]	gk843	85	**6SL3120-1TE28-5AA3**
1PH8137-2.F2...	95.2	0.0885 (0.78)	153 (113)	58	60	gk843	60	**6SL3120-1TE26-0AC0**
1PH8137-2.G2...	95.6	0.0885 (0.78)	153 (113)	84	90[4]	gk843	85	**6SL3120-1TE28-5AA3**
1PH8138-2.F2...	95.9	0.0885 (0.78)	156 (344)	118	120[4]	gk843	132	**6SL3120-1TE31-3AA3**
1PH8138-2.G2...	96.1	0.0885 (0.78)	156 (344)	130	133[4]	gk843	132	**6SL3120-1TE31-3AA3**

Motor Module:	
Single Motor Module	**1**
Double Motor Module	**2**

For continuous load with 200% overload (C-type)	**C**
For highly dynamic, intermittent load cycles with 300% overload (D-type)	**D**

[3] Compliance with the rated pulse frequencies is essential. The rated motor data is valid for 4 kHz.
[4] From approximately 85 A, the top power connector connection type is not possible (15th data position E to H).

© Siemens 2022

Selection and ordering data

Rated speed	Speed, max.[1]	Operating speed, max.[2]	Rated power S1 duty	Rated torque S1 duty	Static torque	**SIMOTICS M-1PH8 synchronous motors**
n_{rated}	n_{max}	$n_{max, Inv}$	P_{rated}	M_{rated}	M_0	
rpm	rpm	rpm	kW (hp)	Nm (lb_f-ft)	Nm (lb_f-ft)	Article No.
Shaft height 160 – Forced ventilation – Line voltage 400 V 3 AC, operation on Active Line Module						
1750	4000	2600	69.0 (92.5)	375 (277)	440 (325)	**1PH8165- ■■F■■-■■■1**
2800	4000	3900	87.0 (116.67)	300 (221.3)	440 (325)	**1PH8165- ■■L■■-■■■1**
1750	4000	2600	77.0 (103.26)	420 (309.8)	500 (369)	**1PH8167- ■■F■■-■■■1**
2800	4000	4000	98.0 (131.42)	335 (247.1)	500 (369)	**1PH8167- ■■L■■-■■■1**
Shaft height 160 – Water cooling – Line voltage 400 V 3 AC, operation on Active Line Module						
1750	4000	2400	67.0 (89.85)	365 (269.2)	440 (325)	**1PH8164- ■■F 2 ■-■■■1**
2300	4000	4000	93.0 (124.71)	315 (232.3)	440 (325)	**1PH8164- ■■L 2 ■-■■■1**
1750	4000	2600	85.0 (113.99)	460 (339.3)	550 (406)	**1PH8166- ■■F 2 ■-■■■1**
2300	4000	3900	109 (146.17)	375 (276.6)	550 (406)	**1PH8166- ■■L 2 ■-■■■1**
1750	4000	2600	94.0 (126.05)	510 (376.2)	620 (457)	**1PH8168- ■■F 2 ■-■■■1**
2300	4000	4000	123 (164.94)	420 (309.8)	520 (384)	**1PH8168- ■■L 2 ■-■■■1**

For versions, see Article No. supplements and options.

[1] Maximum permissible speed, also applies to versions with holding brake.

[2] Maximum permissible operating speed based on the voltage induced in the motor and the voltage strength of the Motor Module (without protective circuit).

© Siemens 2022

Motor type (repeated)	Efficiency	Moment of inertia without holding brake	Weight, approx. without holding brake	Rated current S1 duty	Stall current S1 duty	Terminal box	**SINAMICS S120 Motor Module** Rated output current[3] S1 duty	**Booksize/Chassis format** Internal air cooling For further components, see SINAMICS S120 drive system
	η	J	m	I_{rated}	I_0		I_{rated}	
	%	kgm^2 (lb_f-in-s^2)	kg (lb)	A	A	Type	A	Article No.
1PH8165-..F...	94.3	0.216 (1.91)	218 (481)	115	126	gk874	132	**6SL312 0 -1TE31 -3AA3**
1PH8165-..L...	95.5	0.216 (1.91)	218 (481)	138	188	gk874	200	**6SL312 0 -1TE32 -0AA4**
1PH8167-..F...	94.3	0.244 (2.16)	240 (529)	128	143	gk874	132[4]	**6SL312 0 -1TE31 -3AA3**
1PH8167-..L...	95.9	0.244 (2.16)	240 (529)	164	230	gk874	200[4]	**6SL312 0 -1TE32 -0AA4**
1PH8164-..F2...	94.3	0.175 (1.55)	224 (165)	108	118	gk874	132	**6SL312 0 -1TE31 -3AA3**
1PH8164-..L2...	95.9	0.175 (1.55)	224 (165)	156	205	gk874	200[4]	**6SL312 0 -1TE32 -0AA4**
1PH8166-..F2...	94.3	0.216 (1.91)	257 (190)	143	159	gk874	200	**6SL312 0 -1TE32 -0AA4**
1PH8166-..L2...	95.9	0.216 (1.91)	257 (190)	188	240	gk874	200[4]	**6SL312 0 -1TE32 -0AA4**
1PH8168-..F2...	94.3	0.244 (2.16)	279 (615)	164	179	gk874	200	**6SL312 0 -1TE32 -0AA4**
1PH8168-..L2...	95.9	0.244 (2.16)	279 (615)	210	240	gk874	260	**6SL332 0 -1TE32 -6AA3**

Format:	
Booksize	**1**
Chassis	**3**
Motor Module:	
Single Motor Module	**1**

[3] Compliance with the rated pulse frequencies is essential. The rated motor data is valid for 4 kHz.
[4] The rated output current of the Motor Module is lower than the motor rated current or the motor stall current at 4 kHz.

© Siemens 2022

Selection and ordering data

Rated speed	Speed, max.[1] With holding brake	Speed, max.[1] Without holding brake	Operating speed, max.[2]	Rated power S1 duty	Rated torque S1 duty	Static torque	SIMOTICS M-1PH8 synchronous motors
n_{rated}	$n_{max, Br}$	n_{max1}[2]	$n_{max, Inv}$	P_{rated}	M_{rated}	M_0	
rpm	rpm	rpm	rpm	kW (hp)	Nm (lb_f-ft)	Nm (lb_f-ft)	Article No.
Shaft height 180 – Forced ventilation – Line voltage 400 V 3 AC, operation on Active Line Module							
800	3500	3800	1450	38.0 (50.96)	454 (334.9)	480 (354)	**1PH8184 -■■C■■-■■■1**
1150	3500	3800	1950	53.0 (71.07)	440 (324.5)	480 (354)	**1PH8184 -■■D■■-■■■1**
1750	3500	3800	2700	82.0 (109.96)	447 (329.7)	480 (354)	**1PH8184 -■■F■■-■■■1**
800	3500	3800	1450	50.0 (67.05)	597 (440.3)	640 (472)	**1PH8186 -■■C■■-■■■1**
1150	3500	3800	2050	71.0 (95.21)	590 (435.2)	640 (472)	**1PH8186 -■■D■■-■■■1**
1750	3500	3800	2950	109 (146.17)	595 (438.9)	640 (472)	**1PH8186 -■■F■■-■■■1**
Shaft height 180 – Water cooling – Line voltage 400 V 3 AC, operation on Active Line Module							
800	3500	3800	1450	48.0 (64.4)	573 (422.6)	590 (435.2)	**1PH8184 -■■C 2 ■-■■■1**
1150	3500	3800	1950	70.0 (93.87)	581 (428.5)	600 (443)	**1PH8184 -■■D 2 ■-■■■1**
1750	3500	3800	2700	103 (138.12)	562 (414.5)	600 (442.6)	**1PH8184 -■■F 2 ■-■■■1**
2800	3500	3800	3800	140 (187.74)	461 (340)	530 (390.9)	**1PH8184 -■■L 2 ■-■■■1**
800	3500	3800	1450	66.0 (88.51)	788 (581.2)	800 (590.1)	**1PH8186 -■■C 2 ■-■■■1**
1150	3500	3800	2050	92.0 (123.37)	764 (563.5)	800 (590.1)	**1PH8186 -■■D 2 ■-■■■1**
1750	3500	3800	2950	138 (185.06)	753 (555.4)	800 (590.1)	**1PH8186 -■■F 2 ■-■■■1**
2800	3500	3800	3800	178 (238.7)	586 (432.2)	720 (531.1)	**1PH8186 -■■L 2 ■-■■■1**

For versions, see Article No. supplements and options.

[1] Maximum speed that must not be exceeded.

[2] Maximum permissible operating speed based on the voltage induced in the motor and the voltage strength of the Motor Module (without protective circuit).

© Siemens 2022

Motor type (repeated)	Efficiency	Moment of inertia without holding brake	Weight, approx. without holding brake	Rated current S1 duty	Stall current S1 duty	Terminal box	**SINAMICS S120 Motor Module** Rated output current[3] S1 duty	**Booksize/Chassis format** Internal air cooling For further components, see SINAMICS S120 drive system
	η	J	m	I_{rated}	I_0		I_{rated}	
	%	kgm² (lbf-in-s²)	kg (lb)	A	A	Type	A	Article No.
1PH8184-..C...	92.6	0.46 (4.07)	330 (728)	80.0	84	1XB7322-P05	85	**6SL312 0 -1TE28 -5AA3**
1PH8184-..D...	94.2	0.46 (4.07)	330 (728)	106	115	1XB7322-P05	132	**6SL312 0 -1TE31 -3AA3**
1PH8184-..F...	95.4	0.46 (4.07)	330 (728)	150	157	1XB7322-P05	200	**6SL312 0 -1TE32 -0AA4**
1PH8186-..C...	93.1	0.60 (0.21)	400 (882)	108	115	1XB7322-P05	132	**6SL312 0 -1TE31 -3AA3**
1PH8186-..D...	94.8	0.60 (0.21)	400 (882)	148	157	1XB7322-P05	200	**6SL312 0 -1TE32 -0AA4**
1PH8186-..F...	95.5	0.60 (0.21)	405 (893)	215	229	1XB7422-P06	260	**6SL332 0 -1TE32 -6AA3**
1PH8184-..C2..	92.6	0.457 (4.04)	330 (728)	102	103	1XB7322-P05	132	**6SL312 0 -1TE31 -3AA3**
1PH8184-..D2..	94.2	0.457 (4.04)	330 (728)	140	143	1XB7322-P05	200	**6SL312 0 -1TE32 -0AA4**
1PH8184-..F2..	95.4	0.457 (4.04)	330 (728)	186	196	1XB7322-P05	200	**6SL312 0 -1TE32 -0AA4**
1PH8184-..L2..	95.6	0.457 (4.04)	330 (728)	250	278	1XB7700-P02	260[4]	**6SL332 0 -1TE32 -6AA3**
1PH8186-..C2..	93.1	0.599 (5.30)	400 (882)	142	143	1XB7322-P05	200	**6SL312 0 -1TE32 -0AA4**
1PH8186-..D2..	94.8	0.599 (5.30)	400 (882)	190	196	1XB7322-P05	200	**6SL312 0 -1TE32 -0AA4**
1PH8186-..F2..	95.5	0.599 (5.30)	400 (882)	275	285	1XB7700-P02	310	**6SL332 0 -1TE33 -1AA3**
1PH8186-..L2..	95.5	0.599 (5.30)	400 (882)	340	405	1XB7700-P02	380[4]	**6SL332 0 -1TE33 -8AA3**

Format:		
Booksize	**1**	
Chassis	**3**	
Motor Module:		
Single Motor Module		**1**

[3] Compliance with the rated pulse frequencies is essential. The rated motor data is valid for 4 kHz (booksize format) or 2 kHz (chassis format).
[4] The rated output current of the Motor Module is lower than the motor rated current or the motor stall current at 4 kHz or 2 kHz.

© Siemens 2022

Selection and ordering data

Rated speed	Speed, max.[1] With holding brake	Speed, max.[1] Without holding brake	Operating speed, max.[2]	Rated power S1 duty	Rated torque S1 duty	Static torque	**SIMOTICS M-1PH8 synchronous motors**
n_{rated}	$n_{max, Br}$	n_{max1}[2]	$n_{max, Inv}$	P_{rated}	M_{rated}	M_0	
rpm	rpm	rpm	rpm	kW (hp)	Nm (lb_f-ft)	Nm (lb_f-ft)	Article No.
Shaft height 225 – Forced ventilation – Line voltage 400 V 3 AC, operation on Active Line Module							
800	3100	3500	1450	55.0 (73.76)	657 (484.6)	708 (522.2)	**1PH8224 -■■C■■-■■■1**
1150	3100	3500	2050	78.0 (104.6)	648 (478)	708 (522.2)	**1PH8224 -■■D■■-■■■1**
1750	3100	3500	2900	117 (156.9)	638 (470.6)	708 (522.2)	**1PH8224 -■■F■■-■■■1**
800	3100	3500	1550	73.0 (97.89)	871 (624.4)	944 (696.3)	**1PH8226 -■■C■■-■■■1**
1150	3100	3500	1950	104 (139.46)	864 (637.3)	944 (696.3)	**1PH8226 -■■D■■-■■■1**
1750	3100	3500	2700	156 (209.2)	851 (627.7)	944 (696.3)	**1PH8226 -■■F■■-■■■1**
800	3100	3500	1450	91.0 (122.03)	1086 (801)	1180 (870.4)	**1PH8228 -■■C■■-■■■1**
1150	3100	3500	1950	129 (172.99)	1071 (790)	1180 (870.4)	**1PH8228 -■■D■■-■■■1**
1750	3100	3500	2900	195 (261.5)	1064 (784.8)	1180 (870.4)	**1PH8228 -■■F■■-■■■1**
Shaft height 225 – Water cooling – Line voltage 400 V 3 AC, operation on Active Line Module							
800	3100	3500	1450	81.0 (108.62)	967 (713.3)	1007 (743)	**1PH8224 -■■C 2 ■-■■■1**
1150	3100	3500	2050	115 (154.22)	955 (704.4)	1007 (743)	**1PH8224 -■■D 2 ■-■■■1**
1750	3100	3500	2900	175 (234.68)	955 (704.4)	1007 (743)	**1PH8224 -■■F 2 ■-■■■1**
2800	3100	3500	3500	191 (256.13)	629 (464)	885 (631)	**1PH8224 -■■L 2 ■-■■■1**
800	3100	3500	1550	108 (144.83)	1289 (951)	1330 (981)	**1PH8226 -■■C 2 ■-■■■1**
1150	3100	3500	1950	155 (114)	1287 (949.3)	1330 (981)	**1PH8226 -■■D 2 ■-■■■1**
1750	3100	3500	2700	233 (312.45)	1271 (937.5)	1330 (981)	**1PH8226 -■■F 2 ■-■■■1**
2800	3100	3500	3500	238 (319.16)	784 (578.3)	1170 (863)	**1PH8226 -■■L 2 ■-■■■1**
800	3100	3500	1450	138 (185.06)	1647 (1214.8)	1680 (1239)	**1PH8228 -■■C 2 ■-■■■1**
1150	3100	3500	1950	194 (143)	1611 (1188.3)	1680 (1239)	**1PH8228 -■■D 2 ■-■■■1**

For versions, see Article No. supplements and options.

[1] Maximum speed that must not be exceeded.

[2] Maximum permissible operating speed based on the voltage induced in the motor and the voltage strength of the Motor Module (without protective circuit).

© Siemens 2022

Motor type (repeated)	Efficiency	Moment of inertia without holding brake	Weight, approx. without holding brake	Rated current S1 duty	Stall current S1 duty	Terminal box	**SINAMICS S120 Motor Module** Rated output current[3] S1 duty	**Booksize/Chassis format** Internal air cooling For further components, see SINAMICS S120 drive system
	η	J	m	I_{rated}	I_0		I_{rated}	
	%	kgm^2 (lb_f-in-s^2)	kg (lb)	A	A	Type	A	Article No.
1PH8224-..C...	96.2	1.28 (11.3)	580 (1279)	120	128	1XB7322-P05	132	**6SL312 0 -1TE31 -3AA3**
1PH8224-..D...	96.5	1.28 (11.3)	580 (1279)	170	183	1XB7322-P05	200	**6SL312 0 -1TE32 -0AA4**
1PH8224-..F...	96.5	1.28 (11.3)	580 (1279)	235	256	1XB7422-P06	260	**6SL332 0 -1TE32 -6AA3**
1PH8226-..C...	96.5	1.66 (14.7)	700 (1544)	170	183	1XB7322-P05	200	**6SL312 0 -1TE32 -0AA4**
1PH8226-..D...	96.7	1.66 (14.7)	700 (1544)	215	233	1XB7422-P06	260	**6SL332 0 -1TE32 -6AA3**
1PH8226-..F...	96.6	1.66 (14.7)	700 (1544)	295	320	1XB7700-P02	310[4]	**6SL332 0 -1TE33 -1AA3**
1PH8228-..C...	96.7	2.02 (17.9)	810 (1786)	198	213	1XB7322-P05	200[4]	**6SL312 0 -1TE32 -0AA4**
1PH8228-..D...	96.9	2.02 (17.9)	810 (1786)	260	284	1XB7422-P06	310	**6SL332 0 -1TE33 -1AA3**
1PH8228-..F...	96.6	2.02 (17.9)	810 (1786)	390	427	1XB7700-P02	490	**6SL332 0 -1TE35 -0AA3**
1PH8224-..C2..	95.2	1.28 (11.3)	580 (1279)	178	183	1XB7322-P05	200	**6SL312 0 -1TE32 -0AA4**
1PH8224-..D2..	95.9	1.28 (11.3)	580 (1279)	250	262	1XB7700-P02	260[4]	**6SL332 0 -1TE32 -6AA3**
1PH8224-..F2..	96.3	1.28 (11.3)	580 (1279)	355	367	1XB7700-P02	380	**6SL332 0 -1TE33 -8AA3**
1PH8224-..L2..	95.8	1.28 (11.3)	580 (1279)	335	460	1XB7700-P02	380[4]	**6SL332 0 -1TE33 -8AA3**
1PH8226-..C2..	95.6	1.66 (14.7)	700 (1544)	255	260	1XB7700-P02	260	**6SL332 0 -1TE32 -6AA3**
1PH8226-..D2..	96.2	1.66 (14.7)	700 (1544)	325	330	1XB7700-P02	380	**6SL332 0 -1TE33 -8AA3**
1PH8226-..F2..	96.5	1.66 (14.7)	700 (1544)	440	454	1XB7700-P02	490	**6SL332 0 -1TE35 -0AA3**
1PH8226-..L2..	95.8	1.66 (14.7)	700 (1544)	365	532	1XB7700-P02	490	**6SL332 0 -1TE35 -0AA3**
1PH8228-..C2..	95.8	2.02 (17.9)	810 (1786)	305	306	1XB7700-P02	310	**6SL332 0 -1TE33 -1AA3**
1PH8228-..D2..	96.4	2.02 (17.9)	810 (1786)	395	408	1XB7700-P02	490	**6SL332 0 -1TE35 -0AA3**

Format:	
Booksize	**1**
Chassis	**3**
Motor Module:	
Single Motor Module	**1**

[3] Compliance with the rated pulse frequencies is essential. The rated motor data is valid for 4 kHz (booksize format) or 2 kHz (chassis format).
[4] The rated output current of the Motor Module is lower than the motor rated current or the motor stall current at 4 kHz or 2 kHz.

© Siemens 2022

Selection and ordering data

Data position of the Article No.	1	2	3	4	5	6	7		8	9	10	11	12		13	14	15	16		
Shaft height 132	**1**	**P**	**H**	**8**	**1**	**3**	**.**	**–**	**4**	■	**.**	■	■	**–**	■	■	■	■	**–**	**Z**
Shaft height 160	**1**	**P**	**H**	**8**	**1**	**6**	**.**	**–**	**4**	■	**.**	■	■	**–**	■	■	■	■	**–**	**Z**

Overall length

Synchronous version with holding brake (only shaft heights 132 and 160)[1] — **4**

Encoder systems for motors without DRIVE-CLiQ interface

Incremental encoder sin/cos 1 V_{pp} 2048 S/R with C and D tracks (encoder IC2048S/R)	**M**
Absolute encoder 2048 S/R, 4096 revolutions, multi-turn, with EnDat interface (encoder AM2048S/R)	**E**

Encoder systems for motors with DRIVE-CLiQ interface

Incremental encoder 22 bit (resolution 4194304, internal 2048 S/R) + commutation position 11 bit (encoder IC22DQ)	**D**
Absolute encoder 22 bit + 12 bit multi-turn (encoder AM22DQ)	**F**

Rated speed (winding design)

Cooling	**Degree of protection**	
Forced ventilation DE → NDE	IP55	**0**
Forced ventilation NDE → DE	IP55	**1**
Water cooling	IP55[2]	**2**

Type of construction

IM B5 (IM V1, IM V3)[2]	**2**
IM B35 (IM V15, IM V35)	**3**

Shaft extension DE	**Balancing**	
Plain shaft	–	**0**
Feather key	Half-key	**2**

Bearing design	**Vibration severity acc. to Siemens/EN 60034-14**	**Shaft and flange accuracy**	
Standard	A	N	**A**
Advanced Lifetime	A	N	**P**

Power connection[3] (looking at DE)	**Cable entry**	**Signal connection**	
Terminal box top	Right	DE	**A**
Terminal box top	Left	DE	**B**
Terminal box top	NDE	Left	**C**
Terminal box top	DE	Left	**D**
Power connector top[4]	Right	DE	**E**
Power connector top[4]	Left	DE	**F**
Power connector top[4]	NDE	Left	**G**
Power connector top[4]	DE	Left	**H**

Version[5]

Brake versions

Brake supply voltage 230 V 1 AC 50/60 Hz	Holding brake DE	**U60**
	Holding brake DE with micro switch	**U61**
	Holding brake DE with manual brake release lever	**U62**
	Holding brake DE with micro switch and manual brake release lever	**U63**
Brake supply voltage 24 V DC	Holding brake DE	**U65**
	Holding brake DE with micro switch	**U66**
	Holding brake DE with manual brake release lever	**U67**
	Holding brake DE with micro switch and manual brake release lever	**U68**

Z options that cannot be combined with holding brake DE: K18, V91, M03, M39

[1] A U option must also be stated in the order to specify the holding brake version.
Shaft height 132: limited to n_{max} = 4500 rpm
Shaft height 160: limited to n_{max} = 4000 rpm

[2] Not possible with shaft height 160

[3] Holding brake can only be connected at top of terminal box.

[4] Power connector for motor only (not with holding brake):
Power connector for shaft height 132 only possible up to a maximum stall current of I_0 = 85 A.
Power connector not possible for shaft height 160.

[5] Directly coupled to 9th data position.

© Siemens 2022

Selection and ordering data

Data position of the Article No.	1	2	3	4	5	6	7		8	9	10	11	12		13	14	15	16		
Shaft height 132	**1**	**P**	**H**	**8**	**1**	**3**	**.**	**–**	**2**	■	**.**	■	■	**–**	■	■	■	■	**–**	**Z**
Shaft height 160	**1**	**P**	**H**	**8**	**1**	**6**	**.**	**–**	**2**	■	**.**	■	■	**–**	■	■	■	■	**–**	**Z**

Overall length

Synchronous version without brake: **2**

Encoder systems for motors without DRIVE-CLiQ interface

Incremental encoder sin/cos 1 V_{pp} 2048 S/R with C and D tracks (encoder IC2048S/R)	**M**
Absolute encoder 2048 S/R, 4096 revolutions, multi-turn, with EnDat interface (encoder AM2048S/R)	**E**

Encoder systems for motors with DRIVE-CLiQ interface

Incremental encoder 22 bit (resolution 4194304, internal 2048 S/R) + commutation position 11 bit (encoder IC22DQ)	**D**
Absolute encoder 22 bit + 12 bit multi-turn (encoder AM22DQ)	**F**

Rated speed (winding design)

Cooling	**Degree of protection**	
Forced ventilation DE → NDE	IP55	**0**
Forced ventilation NDE → DE	IP55	**1**
Water cooling	IP65	**2**

Type of construction

IM B3 (IM V5, IM V6)	**0**
IM B5 (IM V1, IM V3)	**2**
IM B35 (IM V15, IM V35)	**3**

Shaft extension DE	**Balancing**	
Plain shaft	–	**0**
Feather key	Full-key	**1**
Feather key	Half-key	**2**

Bearing design	**Vibration severity acc. to Siemens[1]/EN 60034-14**	**Shaft and flange accuracy**	
Standard with locating bearing	R/A	R	**B**
Standard with locating bearing	S/A	R	**C**
Standard	R/A	R	**G**
Standard	S/A	R	**H**
Increased radial forces	R/A	R	**F**
Advanced Lifetime[1]	S/A	R	**Q**

Power connection (looking at DE)	**Cable entry**	**Signal connection**	
Terminal box top	Right	DE	**A**
Terminal box top	Left	DE	**B**
Terminal box top	NDE	Left	**C**
Terminal box top[2]	DE	Left	**D**
Power connector top[3]	Right	DE	**E**
Power connector top[3]	Left	DE	**F**
Power connector top[3]	NDE	Left	**G**
Power connector top[3]	DE	Left	**H**

Version[4]

Special version (order codes required for options): **Z**

[1] For 1PH813 limited to n_{max} = 4500 rpm.
For 1PH816 limited to n_{max} = 4000 rpm.

[2] Not possible for 1PH816.

[3] Power connector for 1PH813 only possible up to a maximum stall current of I_0 = 85 A.
Power connector not possible for 1PH816.

[4] Directly coupled to 9th data position.

© Siemens 2022

Selection and ordering data

Data position of the Article No.	1	2	3	4	5	6	7		8	9	10	11	12		13	14	15	16		
Shaft height 180	**1**	**P**	**H**	**8**	**1**	**8**	**.**	**–**	**4**	■	**.**	■	■	**–**	■	■	■	■	**–**	**Z**
Shaft height 225	**1**	**P**	**H**	**8**	**2**	**2**	**.**	**–**	**4**	■	**.**	■	■	**–**	■	■	■	■	**–**	**Z**
Overall length																				
Synchronous version with holding brake[1]									**4**											
Encoder systems for motors without DRIVE-CLiQ interface																				
Incremental encoder sin/cos 1 V_{pp} 2048 S/R with C and D tracks (encoder IC2048S/R)										**M**								**2**		
Absolute encoder 2048 S/R, 4096 revolutions, multi-turn, with EnDat interface (encoder AM2048S/R)										**E**								**2**		
Encoder systems for motors with DRIVE-CLiQ interface																				
Incremental encoder 22 bit (resolution 4194304, internal 2048 S/R) + commutation position 11 bit (encoder IC22DQ)										**D**								**1**		
Absolute encoder 22 bit + 12 bit multi-turn (encoder AM22DQ)										**F**								**1**		
Rated speed (winding design)																				
Cooling		**Degree of protection**																		
Forced ventilation DE → NDE		IP55										**0**								
Forced ventilation NDE → DE		IP55										**1**								
Water cooling		IP55										**2**								
Type of construction																				
IM B3 (IM B6, IM B7, IM B8)													**0**							
Shaft extension DE		**Balancing**																		
Feather key		Half-key													**2**					
Bearing design		**Vibration severity acc. to Siemens[2]/EN 60034-14**							**Shaft and flange accuracy**											
Standard		A							N							**A**				
Power connection[2] (looking at DE)		**Cable entry**							**Signal connection**											
Terminal box top		Right							DE								**A**			
Terminal box top		Left							DE								**B**			
Terminal box top		NDE							Left								**C**			
Terminal box top		DE							Right								**D**			
Version[3]																				
Brake versions																				
Brake supply voltage 230 V 1 AC 50/60 Hz		Holding brake DE with micro switch and manual brake release lever																		**U63**
Z options that cannot be combined with holding brake DE: K18, K90, L03, M39																				

[1] A U option must also be stated in the order to specify the holding brake version.
Shaft height 180: limited to n_{max} = 3500 rpm
Shaft height 225: limited to n_{max} = 3100 rpm

[2] Holding brake can only be connected via terminal box (top).

[3] Directly coupled to 9th data position.

© Siemens 2022

Selection and ordering data

Data position of the Article No.	1	2	3	4	5	6	7		8	9	10	11	12		13	14	15	16		
Shaft height 180	**1**	**P**	**H**	**8**	**1**	**8**	**.**	**–**	**2**	■	**.**	■	■	**–**	■	■	■	■	**–**	**Z**
Shaft height 225	**1**	**P**	**H**	**8**	**2**	**2**	**.**	**–**	**2**	■	**.**	■	■	**–**	■	■	■	■	**–**	**Z**

Overall length			
Synchronous version without brake		**2**	
Encoder systems for motors without DRIVE-CLiQ interface			
Incremental encoder sin/cos 1 V_{pp} 2048 S/R with C and D tracks (encoder IC2048S/R)		**M**	**2**
Absolute encoder 2048 S/R, 4096 revolutions, multi-turn, with EnDat interface (encoder AM2048S/R)		**E**	**2**
Encoder systems for motors with DRIVE-CLiQ interface			
Incremental encoder 22 bit (resolution 4194304, internal 2048 S/R) + commutation position 11 bit (encoder IC22DQ)		**D**	**1**
Absolute encoder 22 bit + 12 bit multi-turn (encoder AM22DQ)		**F**	**1**
Rated speed (winding design)			

Cooling	**Degree of protection**	11
Forced ventilation DE → NDE	IP55	**0**
Forced ventilation NDE → DE	IP55	**1**
Water cooling	IP55	**2**

Type of construction	12
IM B3 (IM B6, IM B7, IM B8, IM V6)	**0**
IM V5	**1**
IM B5 (IM V3)[1)2)]	**2**
IM B35 (IM V35)[2)]	**3**
IM V15	**5**

Shaft extension DE	**Balancing**	13
Plain shaft	–	**0**
Feather key	Full-key	**1**
Feather key	Half-key	**2**

Bearing design	**Vibration severity acc. to Siemens[3)]/EN 60034-14**	**Shaft and flange accuracy**	14
Standard	R/A	R	**B**
Standard	S/A	R	**C**
Increased radial forces	R/A	R	**F**

Power connection (looking at DE)	**Cable entry**	**Signal connection**	15
Terminal box top	Right	DE	**A**
Terminal box top	Left	DE	**B**
Terminal box top	NDE	Right	**C**
Terminal box top	DE	Right	**D**

Version[3)]	
Special version (order codes required for options)	**Z**

[1)] For 1PH818 continuous speed n_{max} = 3000 rpm.
For 1PH822 continuous speed n_{max} = 2500 rpm.

[2)] For 1PH818 with flange A450.
For 1PH822 with flange A550.

[3)] Directly coupled to 9th data position.

© Siemens 2022

Options

Order code	Description of option When ordering a motor with options, **-Z** must be added to the Article No. The order code must also be stated for each required option. Order codes must not be repeated in plain text in the order.	For use with SIMOTICS M motors 1PH813 1PH816	 1PH818 1PH822
A12	Additional PTC thermistor chain for alarm and tripping (Only possible for versions with terminal box.)	✔	✔
A25	Additional temperature sensor as reserve connected to signal terminal strip (Only possible for versions with terminal box.)	✔	Standard
B02	Test certificate (for ordered motor)	✔	Standard
B35	Factory test certificate for vibration log	✔	✔[6)]
B36	Factory test certificate for run-out log	✔	✔
G14	Fan unit with air filter (only possible if 11th data position is 1)	✔	✔
K08	Encoder connector or DRIVE-CLiQ mounted opposite	–	✔
K09	Terminal box or power connector NDE on the right (For terminal box type, see CAD CREATOR)	✔[1)]	–
	Terminal box NDE right, cable entry DE/signal connection top (Only possible if 15th data position is A)	–	✔
K10	Terminal box or power connector NDE on the left (For terminal box type, see CAD CREATOR)	✔[1)]	–
	Terminal box NDE left, cable entry DE/signal connection top (only possible if 15th data position is A)	–	✔
K18	Radial shaft sealing ring DE[2)] (Not possible if 14th data position is F)	✔	✔
K40	Regreasing system, DE and NDE	–	✔
K45	Anti-condensation heating 230 V AC	–	✔
K80	Axial pipe connection NDE (only possible with forced ventilation)	✔	✔
K83	Rotation of the terminal box by + 90° (only possible in combination with option K09 or K10)	–	✔
K84	Rotation of the terminal box by – 90° (only possible in combination with option K09 or K10)	–	✔
K85	Rotation of the terminal box by + 180° (only possible in combination with option K09 or K10)	–	✔
K90	Version with flange size A400 (only possible if 12th data position is 2, 3 or 5)	–	✔ For 1PH818 only
L00	Replace terminal box (standard) with the next largest terminal box (Note dimension implications, see Drive Technology Configurator)	–	✔
P00	Undrilled cable entry plate	–	✔
P01	Cable entry plate 3 × M63 × 1.5 (only for terminal box type 1XB7700-P02)	–	✔
L03	Increased vibration stress	–	✔
L12	Condensation drain hole	–	✔[4)]
L27	NDE bearing in insulated version	–	✔ For 1PH818 only Standard for 1PH822
L74	Fan version with IP65 degree of protection[3)]	✔	–
M03	Version for potentially explosive atmospheres Zone 2[5)]	✔	–
M39	Version for potentially explosive atmospheres Zone 22[5)]	✔	–
Q12	M5 sealing air connection	✔	–
Q31	Metal rating plate instead of adhesive label	✔	✔

✔	Option available
–	Option not possible

1) A different terminal box type mounted on the side is used in conjunction with option K09 or K10. Instead of gk833, gk843 is used. Only possible with type of construction IM B3 or IM B35.
2) Only appropriate if oil spray or oil vapor is occasionally deposited on the sealing ring.
3) Regardless of the degree of protection, at high levels of atmospheric pollution, the fan must be cleaned.
4) Standard for water-cooled motors.
5) Only with direction of air flow NDE → DE (11th data position =1).
6) Not possible when 14th data position is F.

© Siemens 2022

Options

Order code	Description of option When ordering a motor with options, **-Z** must be added to the Article No. The order code must also be stated for each required option. Order codes must not be repeated in plain text in the order.	For use with SIMOTICS M motors 1PH813 1PH816	 1PH818 1PH822
U60	Holding brake 230 V	✔	–
U61	Holding brake 230 V with microswitch	✔	–
U62	Holding brake 230 V with manual brake release lever	✔	–
U63	Holding brake 230 V with microswitch and manual brake release lever	✔	✔
U65	Holding brake 24 V DC	✔	–
U66	Holding brake 24 V DC with microswitch	✔	–
U67	Holding brake 24 V DC with manual brake release lever	✔	–
U68	Holding brake 24 V DC with microswitch and manual brake release lever	✔	–
V91	1FT6-compatible shaft extension ($d \times l$: 48 × mm (1.89 in) × 82 mm (3.23 in)) (Only possible for 1PH813)	✔	–
Y84	Customer specifications on rating plate (max. 30 characters)	✔	✔
–	**Paint finish** (anthracite RAL 7016)	Standard	Standard
X01	Normal paint finish: Jet black RAL 9005	✔	✔
X02	Normal paint finish: Cream white RAL 9001	✔	✔
X03	Normal paint finish: Reseda green RAL 6011	✔	✔
X04	Normal paint finish: Pebble gray RAL 7032	✔	✔
X05	Normal paint finish: Sky blue RAL 5015	✔	✔
X06	Normal paint finish: Light ivory RAL 1015	✔	✔
X08	Normal paint finish: White aluminum RAL 9006	✔	✔
K24	Primer	✔ Pale green	✔ Red brown
K23	Special paint finish "Worldwide" Primer and paint finish in anthracite RAL 7016	✔	✔
K23+X..	Special paint finish "Worldwide" Primer and paint finish can be selected from X01 to X08	✔	✔

✔	Option available
–	Option not possible

© Siemens 2022

SIMOTICS M-1PH8 – Terminal box assignment, max. connectable cross-sections

Configuration

Terminal box type (See selection and ordering data for assignment)	Cable entry Power	External signals	Outer cable diameter, max.[1] mm (in)	Number of main terminals	Cross-section per terminal, max. mm²	Rated current, max.[2] A
gk833	1 × M40 × 1.5	1 × M16 × 1.5[3]	32 (1.26)	Phases: 3 × M6 Grounding: 2 × M6	1 × 35	110
gk843	1 × M50 × 1.5	1 × M16 × 1.5[3]	38 (1.50)	Phases: 3 × M6 Grounding: 2 × M6	1 × 50	133
gk874	1 × M63 × 1.5	1 × M16 × 1.5[3]	42.6 (1.68)	Phases: 3 × M10 Grounding: 2 × M6	2 × 70	240
1XB7322-P05	2 × M50 × 1.5	1 × M16 × 1.5[4]	38 (1.50)	Phases: 3 × M12 Grounding: 2 × fixing eyelet	2 × 50	210
1XB7422-P06	2 × M63 × 1.5	1 × M16 × 1.5[4]	53 (2.09)	Phases: 3 × M12 Grounding: 2 × fixing eyelet	2 × 70	270
1XB7700-P02	3 × M75 × 1.5	1 × M16 × 1.5[4]	68 (2.68)	Phases: 3 × 2 × M12 Grounding: 2 × fixing eyelet	3 × 150	700

For terminal box type **1XB7700-P02** other cable entries (power) can be ordered via P options depending on the standard:

P00	Undrilled cable entry plate
P01	Cable entry plate 3 × M63 × 1.5

For terminal box types **1XB7322-P05** and **1XB7422-P06**, another cable entry (power) can be ordered via the P option depending on the standard:

P00	Undrilled cable entry plate

With option **K09** or **K10**, terminal box **gk843** mounted on the side is used instead of terminal box **gk833**.

6

[1] Dependent on the design of the metric cable gland.
[2] Current-carrying capacity based on EN 60204-1/IEC 60364-5-52 with installation type E.
[3] Thread M16 × 1.5 arranged with 90° to signal connection. Thread only for option A12, A25 and when 9th data position is A (without encoder).
[4] Thread M16 × 1.5 arranged opposite the signal connection (sideways to the cable entry plate); thread only with option A12 and when 9th data position is A (without encoder).

© Siemens 2022

Overview

SIMOTICS M-1FE1 built-in motors

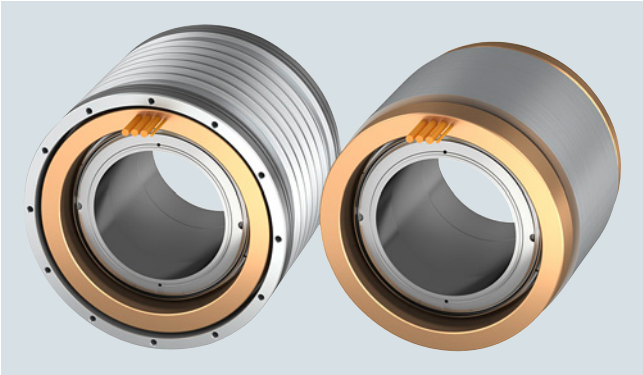

SIMOTICS M-1FE2 built-in motors

The SIMOTICS M-1FE built-in motors are water-cooled synchronous motors that are supplied as stator and rotor components. When the stator and rotor have been mounted to the spindle in the spindle box, a complete spindle unit is created.

Benefits

- Compact and rigid spindle design
- Optimum heat dissipation through water cooling for ideal power density and precision
- Broad portfolio for almost all spindle sizes and machining tasks: Maximum speeds up to 40000 rpm, torques up to 1530 Nm in S1 duty
- High dynamic response for maximum productivity due to permanent-magnet rotors with low inertia
- Low rotor temperatures, especially in the low speed range, and reduced power loss in the rotor, resulting in reduced bearing temperature rise/spindle expansion
- **Pre-machined** stator and rotor for quick and easy installation
- Highest accuracy and surface quality on the workpiece due to smooth, accurate spindle motion in the entire speed range
- Large internal rotor bore – advantage for spindle rigidity and rod passage of automatic lathes
- Compatible system of SINUMERIK, SINAMICS S120 and motor, therefore fast commissioning is ensured

© Siemens 2022

Application

The water-cooled SIMOTICS M-1FE built-in motors are used in combination with the SINAMICS S120 drive system for applications that require the highest quality of machining, accuracy and running smoothness, as well as very short ramp-up times.

There are two main versions of SIMOTICS M-1FE built-in motor available:

- High Torque series
  6-pole/8-pole and 16-pole synchronous motors are available that have been developed for turning and grinding machines with moderate maximum speeds.
  These motors are characterized by a very high torque utilization. The rotational speed setting range (n_n : n_{max}) is 1:2 to 1:4.
- High Speed series
  In this series, 4-pole synchronous motors are available for milling. These motors are optimized for high maximum speeds and a rotational speed setting range of up to 1:6.

Design

The SIMOTICS M-1FE built-in motor comprises:

- A laminated, permanently excited rotor, which, as an option, can be designed with a sleeve for simple mounting and removal.
- A wound stator core with cooling jacket and encapsulated winding overhang.
  - Free cable ends, length 0.5 m (1.64 ft), 1.5 m (4.92 ft) and 3.5 m (11.48 ft)
  - Two integral Pt1000 temperature sensors (incl. 1 reserve), optionally with full or universal protection
  - A cooling jacket into which the stator has been inserted

Rotor with sleeve

Torque is transmitted to the spindle mechanically without play by means of a cylindrical stepped press fit. The rotor is mounted on the spindle by thermal shrinking.
The rotor with sleeve is pre-balanced and can be removed and subsequently remounted. The bond can be released by pressure-oil injection without affecting the joint surfaces.

Rotor without sleeve

Torque is transmitted to the spindle mechanically without play by means of a cylindrical stepped press fit. The rotor is mounted on the spindle by thermal shrinking.
Removal of the rotor is not possible with this type of mounting. Rotors without sleeves are not pre-balanced.

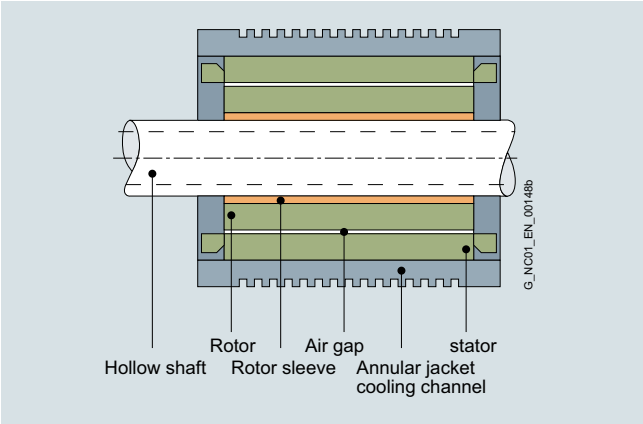

Technical specifications

Product name	SIMOTICS M-1FE synchronous built-in motors
Machine type	Synchronous spindle with permanent-field rotor
Constant power range	1:2 ... 1:4 (6-/8-/16-pole)/ 1:4 ... 1:6 (4-pole)
Recommended coolant inlet temperature, approx.	25 °C (77 °F)
Standard protection temperature monitoring	2 × Pt1000 PTC thermistors in the stator winding, 1 × spare
Full protection optional Application example: Machining when motor is stationary	In addition to standard protection 3 × PTC thermistor triplet Can be evaluated, e.g., using a thermal motor protection unit: Article No.: 3RN1013-1GW30
Universal protection optional	Full protection + NTC PT3-51F + NTC K227
Stator winding insulation in accordance with EN 60034-1 (IEC 60034-1)	Temperature class 155 (F) for a coolant inlet temperature of 25 °C (77 °F)
Type of construction (cf. ISO)	Individual components: Stator, rotor
Degree of protection in accordance with IEC 60034-5	IP00
Balance quality of rotor in accordance with ISO 1940-1	
• Rotor with sleeve	Version-specific - Pre-balanced, balance quality G 2.5, reference speed 3600 rpm - Non-balanced for full balancing after assembly
• Rotor without sleeve	Non-balanced
Encoder system	(not included in scope of supply)
Motor connection	Free cable ends with length of 0.5/1.5/3.5 m (1.64 ft/4.92 ft/11.48 ft)
Rating plate	2 units, enclosed separately

A Voltage Protection Module (VPM) is required for certain motor types if they are operated at max. speed > $n_{max\ Inv}$.

© Siemens 2022

Characteristic curves

Example power/torque characteristic on the SIMOTICS M-1FE1084-6WU11

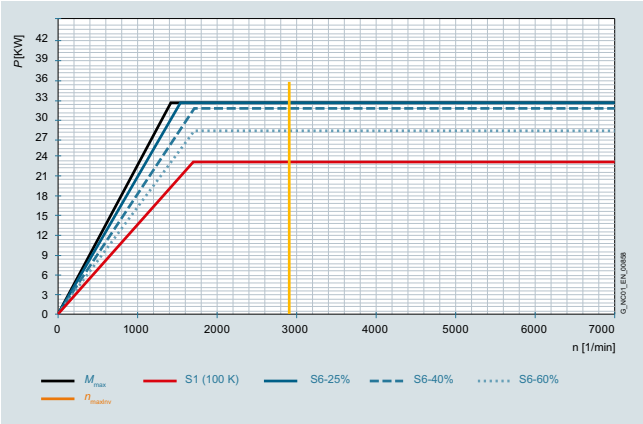

Power characteristic 1FE1084-6WU11

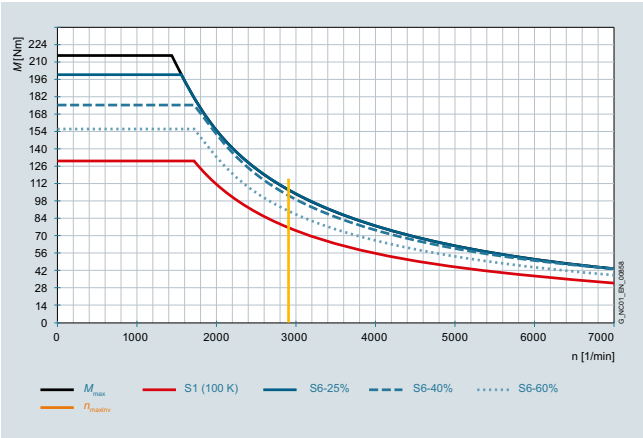

Torque characteristic 1FE1084-6WU

More information

Liquid cooling

These are third-party products that are fundamentally suitable. It goes without saying that equivalent products from other manufacturers may be used. These recommendations are to be seen as helpful information, not as requirements or regulations. Siemens cannot accept any liability for the quality and properties/features of third-party products.

Please get in touch with the cooler manufacturers listed below for technical information.

ait-deutschland GmbH
www.kkt-chillers.com

BKW Kälte-Wärme-Versorgungstechnik GmbH
www.bkw-kuema.de

DELTATHERM Hirmer GmbH
www.deltatherm.com

Glen Dimplex Deutschland GmbH
Business unit RIEDEL cooling technology
www.riedel-kooling.com

Helmut Schimpke und Team Industriekühlanlagen GmbH + Co. KG
www.schimpke.de

Hydac System GmbH
www.hydac.com

Hyfra Industriekühlanlagen GmbH
www.hyfra.com

Lahntechnik GmbH
www.lahntechnik.com

Pfannenberg GmbH
www.pfannenberg.com

© Siemens 2022

Selection and ordering data

Rated power for duty type P_{rated} S1 kW (hp)	S6-40% kW (hp)	Rated torque M_{rated} S1 Nm (lb_f-ft)	S6-40% Nm (lb_f-ft)	Rated speed n_{rated} rpm	Speed without VPM, max. $n_{max\ Inv}$ rpm	Speed, max. n_{max} rpm	**SIMOTICS M-1FE1 synchronous built-in motors** Article No.	Moment of inertia rotor without sleeve [8] J kgm^2 (lb_f-in-s^2)	Weight, approx. stator + rotor without sleeve m kg (lb)
SIMOTICS M-1FE1 High Torque series – Water cooling – ΔT = 105 K - Line voltage 400 V 3 AC, operation on Active Line Module									
7.4 (9.92)	9.9 (13.3)	4.5 (3.32)	6 (4.43)	15800	18000	18000	**1FE1041-6WM ■ 0 - 6 B A ■**	0.00019 (0.02)	2.8 (6.17)
4 (5.36)	5.3 (7.11)	4.5 (3.32)	6 (4.43)	8500	13100	18000	**1FE1041-6WU ■ ■ - 6 B A ■**	0.00019 (0.02)	2.8 (6.17)
14.4 (19.3)	18.3 (24.5)	11 (8.11)	14 (10.3)	12500	18000	18000	**1FE1042-6WN ■ 0 - 6 B A ■**	0.00033 (0.03)	6.5 (14.3)
11.5 (15.4)	14.7 (19.7)	11 (8.11)	14 (10.3)	10000	15000	18000	**1FE1042-6WR ■ ■ - 6 B A ■**	0.00033 (0.03)	6.5 (14.3)
9.2 (12.3)	11.7 (15.7)	11 (8.11)	14 (10.3)	8000	12000	18000	**1FE1042-6WT ■ ■ - 6 B A ■**	0.00033 (0.03)	6.5 (14.3)
8.3 (11.1)	10.4 (13.9)	10 (7.38)	12.4 (9.15)	8000	15000	15000	**1FE1051-6WK ■ 0 - 6 B ■ ■**	0.00106 (0.01)	5.5 (12.1)
6.3 (8.45)	7.9 (10.6)	10 (7.38)	12.6 (9.29)	6000	12300	15000	**1FE1051-6WN ■ ■ - 6 B ■ ■**	0.00106 (0.01)	5.5 (12.1)
14 (18.8)	18 (24.1)	18 (13.3)	23 (17.0)	7500	15000	15000	**1FE1052-6WK ■ 0 - 6 B ■ ■**	0.00195 (0.17)	8.2 (18.1)
11.5 (15.4)	14.5 (19.4)	20 (14.8)	25.2 (18.6)	5500	12300	15000	**1FE1052-6WN ■ ■ - 6 B ■ ■**	0.00195 (0.17)	8.2 (18.1)
5.7 (7.64)	7.2 (9.66)	18 (13.3)	23 (17.0)	3000	6000	14200	**1FE1052-6WY ■ ■ - 6 B ■ ■**	0.00195 (0.17)	8.2 (18.1)
23 (30.8)	29 (21.4)	37 (27.3)	46 (33.9)	6000	12000	12000	**1FE1054-6WN ■ 0 - 6 B A ■**	0.0038 (0.03)	14.3 (31.5)
20.2 (27.1)	28.9 (38.8)	42 (31.0)	60 (44.3)	4600	8500	12000	**1FE1054-6WR ■ ■ - 6 B A ■**	0.0038 (0.03)	14.3 (31.5)
11.6 (15.6)	15 (20.1)	13 (9.59)	17 (12.5)	8500	12000	12000	**1FE1061-6WH ■ 0 - 6 B ■ ■**	0.00141 (0.01)	5.5 (12.1)
4.8 (6.44)	6.2 (8.31)	13 (9.59)	17 (12.5)	3500	6300	12000	**1FE1061-6WV ■ ■ - 6 B ■ ■**	0.00141 (0.01)	5.5 (12.1)
4 (5.36)	5.3 (7.11)	13 (9.59)	17 (12.5)	3000	5300	10500	**1FE1061-6WY ■ ■ - 6 B ■ ■**	0.00141 (0.01)	5.5 (12.1)
14 (18.8)	17 (22.8)	23 (17.0)	28 (20.7)	5800	9700	12000	**1FE1062-6WQ ■ 1 - 6 B A ■**	0.0028 (0.02)	7.7 (17.0)
25 (33.5)	36.5 (48.9)	56 (41.3)	81 (59.7)	4300	8000	12000	**1FE1064-6WN ■ 1 - 6 B A ■**	0.00553 (0.04)	14.5 (32.0)
20 (26.8)	29 (21.4)	56 (41.3)	81 (59.7)	3400	6300	10000	**1FE1064-6WQ ■ 1 - 6 B A ■**	0.00553 (0.04)	14.5 (32.0)
34 (45.6)	42.5 (57.0)	65 (47.9)	81 (59.7)	5000	8500	9000	**1FE1082-6WP ■ ■ - 6 B ■ ■**	0.01048 (0.09)	14 (30.9)
29.3 (39.3)	36.5 (48.9)	65 (47.9)	81 (59.7)	4300	7700	9000	**1FE1082-6WQ ■ 1 - 6 B ■ ■**	0.01048 (0.09)	14 (30.9)
24.5 (32.9)	30 (40.2)	65 (47.9)	81 (59.7)	3600	6000	9000	**1FE1082-6WS ■ ■ - 6 B ■ ■**	0.01048 (0.09)	14 (30.9)
15 (20.1)	18.7 (25.1)	65 (47.9)	81 (59.7)	2200	3800	9000	**1FE1082-6WW ■ 1 - 6 B ■ ■**	0.01048 (0.09)	14 (30.9)
11.6 (15.6)	14.4 (19.3)	65 (47.9)	81 (59.7)	1700	3100	8000	**1FE1082-6WE ■ 1 - 6 B ■ ■**	0.01048 (0.09)	14 (30.9)
35.5 (47.6)	46.5 (62.4)	97 (71.5)	127 (112)	3500	5600	9000	**1FE1083-6WP ■ ■ - 6 B ■ ■**	0.016 (0.14)	24 (52.9)
31 (41.6)	42 (56.3)	130 (95.9)	175 (129)	2300	3800	9000	**1FE1084-6WR ■ 1 - 6 B ■ ■**	0.02067 (0.18)	30 (66.1)
23.1 (31.0)	31.1 (41.7)	130 (95.9)	175 (129)	1700	2900	7000	**1FE1084-6WU ■ 1 - 6 B ■ ■**	0.02067 (0.18)	30 (66.1)
15 (20.1)	19 (25.5)	130 (95.9)	174 (128)	1100	1900	4500	**1FE1084-6WX ■ 1 - 6 B ■ ■**	0.02067 (0.18)	30 (66.1)
10 (13.4)	13.2 (17.7)	28 (20.7)	36 (26.6)	3500	7000	7000	**1FE1091-6WN ■ 0 - 6 B ■ ■**	0.00814 (0.07)	17 (37.5)
6.3 (8.45)	7.5 (10.1)	30 (22.1)	36 (26.6)	2000	4100	7000	**1FE1091-6WS ■ ■ - 6 B ■ ■**	0.00814 (0.07)	17 (37.5)
24.2 (32.5)	31 (41.6)	66 (48.7)	85 (62.7)	3500	7000	7000	**1FE1092-6WN ■ 0 - 6 B ■ ■**	0.01566 (0.14)	26 (57.3)
22 (29.5)	28.5 (38.2)	66 (48.7)	85 (62.7)	3200	5100	7000	**1FE1092-6WR ■ 1 - 6 B ■ ■**	0.01566 (0.14)	26 (57.3)
36.6 (49.1)	47 (63.0)	100 (73.8)	128 (94.4)	3500	7000	7000	**1FE1093-6WN ■ 0 - 6 B ■ ■**	0.02317 (0.21)	36 (79.4)
27.2 (36.5)	34 (45.6)	100	130 (95.9)	2600	4300	7000	**1FE1093-6WS ■ ■ - 6 B ■ ■**	0.02317 (0.21)	36 (79.4)
16.8 (22.5)	21.5 (28.8)	100 (73.8)	128 (94.4)	1600	3400	7000	**1FE1093-6WV ■ 1 - 6 B ■ ■**	0.02317 (0.21)	36 (79.4)
15 (20.1)	18 (24.1)	98 (72.3)	130 (95.9)	1460	2500	6300	**1FE1093-6WX ■ 1 - 6 B ■ ■**	0.02317 (0.21)	36 (79.4)

• Standard protection: 2 × Pt1000 [1] • Full protection: 2 × Pt1000 + 3 × PTC thermistor triplet [2] • Universal protection [3]	**1** **3** **5**
• Operation without VPM module • Operation with VPM module	**0** **1**
• Delivery of stator + rotor [1) 4) 5)]	**6**
• Stator with cooling jacket [1) 7)]	**B**
• Without rotor sleeve, d_i see dimensions table • With rotor sleeve, d^* see dimensions table (only for 1FE1061/1FE108/1FE109) • With rotor sleeve, d^{**} see dimensions table (only for 1FE1051/1FE1052/1FE108/1FE109) • With rotor sleeve, d^{**} see dimensions table (only for 1FE1082)	**A** **B** **C** **D**
• Free cable ends, length 1.5 m (4.92 ft) [6] Cable outlet at larger outer diameter of cooling jacket Cable outlet at smaller outer diameter of cooling jacket • Free cable ends, length 0.5 m (1.64 ft) [6] Cable outlet at larger outer diameter of cooling jacket Cable outlet at smaller outer diameter of cooling jacket	**0** **1** **2** **3**

S1 = Continuous duty
S6 = Intermittent duty:
Type 1FE104/1FE105/1FE106/1FE1082: Duty cycle time 1 min
Type 1FE1084/1FE109: Duty cycle time 2 min

For footnotes, see next page.

© Siemens 2022

Motor type (repeated)	Rated current for duty type		**Voltage Protection Module (VPM)**	**SINAMICS S120 Motor Module**	
				Required rated current	**Booksize format**
					Internal air cooling For further components, see SINAMICS S120 drive system
	I_{rated} S1	S6-40%		I_{rated} S1 to n_{max}	
	A	A		A	Article No.
SIMOTICS M-1FE1 High Torque series – Water cooling					
1FE1041-6WM...	13	17.5	–	24 [10]	**6SL3120-1TE22-4AD0**
1FE1041-6WU...	8	11	VPM 120	18 [10]	**6SL3120-■TE21-8AD0**
1FE1042-6WN...	24	32	–	45 [10]	**6SL3120-1TE24-5AC0**
1FE1042-6WR...	19	26	VPM 120	30 [10]	**6SL3120-1TE23-0AD0**
1FE1042-6WT...	16	22	VPM 120	24 [9] [10]	**6SL3120-1TE22-0AD0**
1FE1051-6WK...	20	29	–	24 [10]	**6SL3120-1TE22-4AD0**
1FE1051-6WN...	15	22	VPM 120	18 [10]	**6SL3120-■TE21-8AD0**
1FE1052-6WK...	37	54	–	45 [10]	**6SL3120-1TE24-5AC0**
1FE1052-6WN...	30	44	VPM 120	30 [10]	**6SL3120-1TE23-0AD0**
1FE1052-6WY...	13.5	20	VPM 120	18	**6SL3120-■TE21-8AD0**
1FE1054-6WN...	60	88	–	60	**6SL3120-1TE26-0AC0**
1FE1054-6WR...	40	58	VPM 120	45 [9]	**6SL3120-1TE24-5AC0**
1FE1061-6WH...	21	30	–	24	**6SL3120-1TE22-4AD0**
1FE1061-6WV...	9	13	VPM 120	9 [9]	**6SL3120-1TE21-0AD0**
1FE1061-6WY...	8	11.5	VPM 120	9 [9]	**6SL3120-1TE21-0AD0**
1FE1062-6WQ...	28.5	36	VPM 120	30 [9]	**6SL3120-1TE23-0AD0**
1FE1064-6WN...	56	80	VPM 120	60 [9]	**6SL3120-1TE26-0AC0**
1FE1064-6WQ...	43	61	VPM 120	45 [9]	**6SL3120-1TE24-5AC0**
1FE1082-6WP...	65	91	VPM 120	85	**6SL3120-1TE28-5AA3**
1FE1082-6WQ...	60	84	VPM 120	60 [9]	**6SL3120-1TE26-0AC0**
1FE1082-6WS...	45	62	VPM 120	45 [9]	**6SL3120-1TE24-5AC0**
1FE1082-6WW...	30	42	VPM 120	30 [9]	**6SL3120-1TE23-0AD0**
1FE1082-6WE...	24	33	VPM 120	24 [9]	**6SL3120-1TE22-4AD0**
1FE1083-6WP...	66	92	VPM 120	85	**6SL3120-1TE28-5AA3**
1FE1084-6WR...	60	84	VPM 120	60 [9]	**6SL3120-1TE26-0AC0**
1FE1084-6WU...	45	64	VPM 120	45 [9]	**6SL3120-1TE24-5AC0**
1FE1084-6WX...	30	42	VPM 120	30 [9]	**6SL3120-1TE23-0AD0**
1FE1091-6WN...	24	35	–	24	**6SL3120-1TE22-4AD0**
1FE1091-6WS...	15	19	VPM 120	18	**6SL3120-■TE21-8AD0**
1FE1092-6WN...	58	84	–	60	**6SL3120-1TE26-0AC0**
1FE1092-6WR...	41	58	VPM 120	45	**6SL3120-1TE24-5AC0**
1FE1093-6WN...	83	120	–	85	**6SL3120-1TE28-5AA3**
1FE1093-6WS...	53	76	VPM 120	60	**6SL3120-1TE26-0AC0**
1FE1093-6WV...	43	60	VPM 120	45	**6SL3120-1TE24-5AC0**
1FE1093-6WX...	30	45	VPM 120	30 [9]	**6SL3120-1TE23-0AD0**

Motor Module:	
Single Motor Module	**1**
Double Motor Module	**2**

[1] Standard scope of supply: Encapsulated winding with 2 × Pt1000 (1 × reserve).
[2] Full protection option, application example: Load at motor standstill, external tripping unit required; Article No.: 3RN2013-1GW30.
[3] Universal protection option: Full protection + NTC PT3-51F + NTC K227.
[4] Ordering spare stator parts: 1FE1…-…..-7.W.
[5] Ordering spare rotor parts: 1FE1…-…..-3W..
[6] For cable design, see Configuration Manual.
[7] Stator without cooling jacket on request.
[8] For moment of inertia with sleeve, see Configuration Manual.
[9] For operation without external VPM but with converter function IVP (Internal Voltage Protection), a larger Motor Module is required.
[10] PWM clock cycle must be increased.

© Siemens 2022

Selection and ordering data

Rated power for duty type P_{rated} S1 kW (hp)	S6-40% kW (hp)	Rated torque M_{rated} S1 Nm (lb_f-ft)	S6-40% Nm (lb_f-ft)	Rated speed n_{rated} rpm	Speed without VPM, max. $n_{max\ Inv}$ rpm	Speed, max. n_{max} rpm	**SIMOTICS M-1FE1 synchronous built-in motors** Article No.	Moment of inertia rotor without sleeve [8] J kgm^2 (lb_f-in-s^2)	Weight, approx. stator + rotor without sleeve m kg (lb)
SIMOTICS M-1FE1 High Torque series – Water cooling – ΔT = 105 K – Line voltage 400 V 3 AC, operation on Active Line Module									
33 (44.3)	35 (46.9)	150 (111)	190 (140)	2100	3300	6500	**1FE1113-6WU ■ 1 - 6 B ■ ■**	0.047 (0.42)	53 (117)
22 (29.5)	24 (52.9)	150 (111)	190 (140)	1400	2300	5700	**1FE1113-6WX ■ 1 - 6 B ■ ■**	0.047 (0.42)	53 (117)
41.9 (56.2)	53.6 (71.9)	200 (148)	256 (189)	2000	4300	6500	**1FE1114-6WR ■ 1 - 6 B ■ ■**	0.06239 (0.55)	67 (148)
29.3 (39.3)	37.5 (50.3)	200 (148)	256 (189)	1400	3400	6500	**1FE1114-6WT ■ 1 - 6 B ■ ■**	0.06239 (0.55)	67 (148)
20.9 (28.0)	26.8 (35.9)	200 (148)	256 (189)	1000	2300	6000	**1FE1114-6WW ■ 1 - 6 B ■ ■**	0.06239 (0.55)	67 (148)
41.6 (55.8)	45 (60.3)	265 (195)	340 (251)	1500	2600	6500	**1FE1115-6WT ■ 1 - 6 B ■ ■**	0.078 (0.69)	81 (179)
29.1 (39.0)	30 (40.2)	265 (195)	340 (251)	1050	1800	4500	**1FE1115-6WW ■ 1 - 6 B ■ ■**	0.078 (0.69)	81 (179)
37.7 (50.6)	48.3 (42.6)	300 (221)	384 (283)	1200	2800	6500	**1FE1116-6WR ■ 1 - 6 B ■ ■**	0.09285 (0.82)	92 (203)
28.3 (38.0)	36.2 (48.5)	300 (221)	384 (283)	900	2200	5500	**1FE1116-6WT ■ 1 - 6 B ■ ■**	0.09285 (0.82)	92 (203)
22 (29.5)	28 (37.5)	300 (221)	384 (283)	700	1500	4000	**1FE1116-6WW ■ 1 - 6 B ■ ■**	0.09285 (0.82)	92 (203)
24 (32.2)	24 (52.9)	310 (229)	410 (302)	740	1100	3000	**1FE1116-6WY ■ 1 - 6 B ■ ■**	0.09285 (0.82)	92 (203)
61.3 (82.2)	78 (105)	325 (240)	440 (325)	1800	3200	8000	**1FE1143-8WM ■ 1 - 6 B A ■**	0.0859 (0.76)	74.4 (164)
38.5 (51.6)	47 (63.0)	320 (236)	440 (325)	1150	1900	5000	**1FE1143-8WQ ■ 1 - 6 B A ■**	0.0859 (0.76)	74.4 (164)
63 (84.5)	80 (107)	430 (317)	610 (450)	1400	2600	6500	**1FE1144-8WL ■ 1 - 6 B ■ ■**	0.1145 (1.01)	84.5 (186)
49.5 (66.4)	60 (44.3)	430 (317)	610 (450)	1100	2000	4900	**1FE1144-8WQ ■ 1 - 6 B ■ ■**	0.1145 (1.01)	84.5 (186)
40.5 (54.3)	51 (68.4)	430 (317)	610 (450)	900	1700	3800	**1FE1144-8WT ■ 1 - 6 B ■ ■**	0.1145 (1.01)	84.5 (186)
35.1 (47.1)	40 (53.6)	430 (317)	610 (450)	780	1400	3500	**1FE1144-8WV ■ 1 - 6 B ■ ■**	0.1145 (1.01)	84.5 (186)
104 (139)	124 (166) [10]	585 (431)	795 (586) [10]	1700	3100	8000	**1FE1145-8WN ■ 1 - 6 B ■ ■**	0.21636 (1.91) [9]	117 (258)
79.6 (107)	97 (130)	585 (431)	795 (586)	1300	2400	6000	**1FE1145-8WQ ■ 1 - 6 B ■ ■**	0.21636 (1.91) [9]	117 (258)
67.4 (90.4)	80 (107)	585 (431)	795 (586)	1100	1900	5000	**1FE1145-8WS ■ 1 - 6 B ■ ■**	0.21636 (1.91) [9]	117 (258)
48 (64.4)	52 (69.7)	585 (431)	795 (586)	780	1300	3500	**1FE1145-8WE ■ 1 - 6 B ■ ■**	0.21636 (1.91) [9]	117 (258)
103 (138)	124 (166) [10]	820 (605)	1110 (819) [10]	1200	2200	5500	**1FE1147-8WN ■ 1 - 6 B ■ ■**	0.28823 (2.55) [9]	155 (114)
81.6 (109)	97 (130)	820 (605)	1110 (819)	950	1700	4200	**1FE1147-8WQ ■ 1 - 6 B ■ ■**	0.28823 (2.55) [9]	155 (114)
64.4 (86.4)	80 (107)	820 (605)	1110 (819)	750	1400	3500	**1FE1147-8WS ■ 1 - 6 B ■ ■**	0.28823 (2.55) [9]	155 (342)

• Standard protection: 2 × Pt1000 [1] • Full protection: 2 × Pt1000 + 3 × PTC thermistor triplet [2] • Universal protection [3]	**1** **3** **5**			
• Delivery of stator + rotor [1) 4) 5)]		**6**		
• Stator with cooling jacket [1) 7)]			**B**	
• Without rotor sleeve • With rotor sleeve, *d** see dimensions table (only for 1FE1114/1FE1116) • With rotor sleeve, *d*** see dimensions table • With rotor sleeve, *d*** see dimensions table (only for 1FE1113/1FE1145/1FE1147) • With rotor sleeve, *d*** see dimensions table (only for 1FE1113/1FE1145)				**A** **B** **C** **D** **E**
• Free cable ends, length 1.5 m (4.92 ft) [6] Cable outlet at larger outer diameter of cooling jacket Cable outlet at smaller outer diameter of cooling jacket • Free cable ends, length 0.5 m (1.64 ft) [6] Cable outlet at larger outer diameter of cooling jacket Cable outlet at smaller outer diameter of cooling jacket				**0** **1** **2** **3**

S1 = Continuous duty
S6 = Intermittent duty:
Type 1FE111/1FE114: Duty cycle time 2 min

For footnotes, see next page.

© Siemens 2022

Motor type (repeated)	Rated current for duty type		**Voltage Protection Module (VPM)**	**SINAMICS S120 Motor Module**	
				Required rated current	**Booksize format**
					Internal air cooling For further components, see SINAMICS S120 drive system
	I_{rated} S1	S6-40%		I_{rated} S1 to n_{max}	
	A	A		A	Article No.
SIMOTICS M-1FE1 High Torque series – Water cooling					
1FE1113-6WU...	60	91	VPM 120	60	**6SL3120-1TE26-0AC0**
1FE1113-6WX...	43	62	VPM 120	45	**6SL3120-1TE24-5AC0**
1FE1114-6WR...	108	159	VPM 120	132	**6SL3120-1TE31-3AA3**
1FE1114-6WT...	84	123	VPM 120	85	**6SL3120-1TE28-5AA3**
1FE1114-6WW...	58	85	VPM 120	60	**6SL3120-1TE26-0AC0**
1FE1115-6WT...	85	123	VPM 120	85	**6SL3120-1TE28-5AA3**
1FE1115-6WW...	60	87	VPM 120	60	**6SL3120-1TE26-0AC0**
1FE1116-6WR...	109	160	VPM 120	132	**6SL3120-1TE31-3AA3**
1FE1116-6WT...	84	123	VPM 120	85	**6SL3120-1TE28-5AA3**
1FE1116-6WW...	60	87	VPM 120	60	**6SL3120-1TE26-0AC0**
1FE1116-6WY...	45	65	VPM 120	45	**6SL3120-1TE24-5AC0**
1FE1143-8WM...	120	180	VPM 200	132	**6SL3120-1TE31-3AA3**
1FE1143-8WQ...	77	113	VPM 120	85	**6SL3120-1TE28-5AA3**
1FE1144-8WL...	133	193	VPM 200	200	**6SL3120-1TE32-0AA4**
1FE1144-8WQ...	100	146	VPM 200	132	**6SL3120-1TE31-3AA3**
1FE1144-8WT...	85	124	VPM 120	85	**6SL3120-1TE28-5AA3**
1FE1144-8WV...	71	103	VPM 120	85	**6SL3120-1TE28-5AA3**
1FE1145-8WN...	200	290 [10]	VPM 200	200	**6SL3120-1TE32-0AA4**
1FE1145-8WQ...	158	230	VPM 200	200	**6SL3120-1TE32-0AA4**
1FE1145-8WS...	130	188	VPM 200	132	**6SL3120-1TE31-3AA3**
1FE1145-8WE...	85	128	VPM 120	85	**6SL3120-1TE28-5AA3**
1FE1147-8WN...	200	290 [10]	VPM 200	200	**6SL3120-1TE32-0AA4**
1FE1147-8WQ...	158	230	VPM 200	200	**6SL3120-1TE32-0AA4**
1FE1147-8WS...	130	190	VPM 200	132	**6SL3120-1TE31-3AA3**

Motor Module:	
Single Motor Module	**1**

[1] Standard scope of supply: Encapsulated winding with 2 × Pt1000 (1 × reserve).
[2] Full protection option, application example: Load at motor standstill, external tripping unit required; Article No.: 3RN2013-1GW30.
[3] Universal protection option: Full protection + NTC PT3-51F + NTC K227.
[4] Ordering spare stator parts: 1FE1…-…..-7.W.
[5] Ordering spare rotor parts: 1FE1…-…..-3W..
[6] For cable design, see Configuration Manual.
[7] Stator without cooling jacket on request.
[8] For moment of inertia with sleeve, see Configuration Manual.
[9] Moment of inertia for rotor with rotor sleeve, "C" in 15th data position of Article No.
[10] Observe the Motor Module limit.

© Siemens 2022

Selection and ordering data

Rated power for duty type		Rated torque		Rated speed	Speed without VPM, max.	Speed, max.	**SIMOTICS M-1FE1 synchronous built-in motors**	Moment of inertia rotor	Weight, approx. stator + rotor without sleeve
P_{rated} S1	S6-40%	M_{rated} S1	S6-40%	n_{rated}	$n_{max\ Inv}$	n_{max}		J	m
kW (hp)	kW (hp)	Nm (lb_f-ft)	Nm (lb_f-ft)	rpm	rpm	rpm	Article No.	kgm^2 (lb_f-in-s^2)	kg (lb)
SIMOTICS M-1FE1 High Speed series – Water cooling – ΔT = 105 K – Line voltage 400 V 3 AC, operation on Active Line Module									
12.6 (16.9)	17.6 (23.6)	5 (3.69)	7 (5.16)	24000	40000	40000	**1FE1051-4HC ■ 0 - 6 B A ■**	0.00045 (0.004)	4.1 (9.04)
10 (13.4)	14 (18.8)	5 (3.69)	7 (5.16)	19000	34100	40000	**1FE1051-4HF ■ 1 - 6 B A ■**	0.00045 (0.004)	4.1 (9.04)
6.5 (8.72)	8 (10.7)	6.5 (4.79)	9 (6.64)	9500	17000	30000	**1FE1051-4WN ■ 1 - 6 B A ■**	0.00057 (0.005)	4.2 (9.26)
31.4 (42.1)	35 (46.9)	12 (8.85)	15 (11.1)	25000	40000	40000 [9]	**1FE1052-4HD ■ 0 - 6 B A ■**	0.00087 (0.007)	7.15 (15.8)
23.9 (32.1)	29.8 (40.0)	12 (8.85)	15 (11.1)	19000	32200	40000 [9]	**1FE1052-4HG ■ 1 - 6 B A ■**	0.00087 (0.007)	7.15 (15.8)
17.5 (23.5)	19 (25.5)	13 (9.59)	17 (12.5)	12500	20700	30000	**1FE1052-4WK ■ 1 - 6 B A ■**	0.00110 (0.0097)	7.35 (16.2)
11 (14.8)	12 (16.1)	13 (9.59)	18 (13.3)	8000	13100	30000	**1FE1052-4WN ■ 1 - 6 B A ■**	0.00110 (0.0097)	7.35 (16.2)
25.5 (34.2)	32.5 (43.6)	18 (13.3)	23 (17.0)	13500	23100	40000 [9]	**1FE1053-4HH ■ 1 - 6 B A ■**	0.00128 (0.0113)	10.2 (22.5)
23 (30.8)	25 (33.5)	20 (14.8)	27 (19.9)	11000	14800	30000	**1FE1053-4WJ ■ 1 - 6 B A ■**	0.00163 (0.0144)	10.5 (23.1)
16.5 (22.1)	18 (24.1)	20 (14.8)	27 (19.9)	7900	12800	30000	**1FE1053-4WN ■ 1 - 6 B A ■**	0.00163 (0.0144)	10.5 (23.1)
28.5 (38.2)	28.5 (38.2)	28 (20.7)	40 (29.5)	9700	17500	24000	**1FE1072-4WH ■ 1 - 6 B A ■**	0.00287 (0.0254)	11.2 (24.7)
20 (26.8)	20 (26.8)	28 (20.7)	40 (29.5)	6800	12600	24000	**1FE1072-4WL ■ 1 - 6 B A ■**	0.00287 (0.0254)	11.2 (24.7)
16 (21.5)	16 (21.5)	28 (20.7)	40 (29.5)	5500	9900	24000	**1FE1072-4WN ■ 1 - 6 B A ■**	0.00287 (0.0254)	11.2 (24.7)
7.3 (9.79)	8.5 (11.4)	28 (20.7)	40 (29.5)	2500	5100	12600	**1FE1072-4WV ■ 1 - 6 B A ■**	0.00287 (0.0254)	11.2 (24.7)
45 (60.3)	45 (60.3)	44 (32.5)	67 (49.4)	9700	14800	24000	**1FE1073-4WL ■ 1 - 6 B A ■**	0.0043 (0.0381)	16 (35.3)
30 (40.2)	30 (40.2)	42 (31.0)	59 (43.5)	6800	11800	24000	**1FE1073-4WN ■ 1 - 6 B A ■**	0.0043 (0.0381)	16 (35.3)
15 (20.1)	15 (20.1)	45 (33.2)	64 (47.2)	3200	5500	14000	**1FE1073-4WT ■ 1 - 6 B A ■**	0.0043 (0.0381)	16 (35.3)
48 (64.4)	51 (68.4)	60 (44.3)	86 (63.4)	7700	13400	20000	**1FE1074-4WM ■ 1 - 6 B A ■**	0.00573 (0.05)	21 (46.3)
41 (55.0)	41 (55.0)	56 (41.3)	79 (58.3)	7000	12300	20000	**1FE1074-4WN ■ 1 - 6 B A ■**	0.00573 (0.05)	21 (46.3)
30 (40.2)	33 (44.3)	60 (44.3)	85 (62.7)	4800	8200	20000	**1FE1074-4WR ■ 1 - 6 B A ■**	0.00573 (0.05)	21 (46.3)
25.8 (34.6)	28 (37.5)	60 (44.3)	85 (62.7)	4100	7200	18000	**1FE1074-4WT ■ 1 - 6 B A ■**	0.00573 (0.05)	21 (46.3)
23.9 (32.1)	25 (33.5)	60 (44.3)	80 (59.0)	3800	6300	15500	**1FE1074-4WV ■ 1 - 6 B A ■**	0.00573 (0.05)	21 (46.3)
23.6 (31.6)	27 (36.2)	75 (55.3)	100 (73.8)	3000	5700	14000	**1FE1075-4WQ ■ 1 - 6 B A ■**	0.00741 (0.07)	25.5 (56.2)
33 (44.3)	37 (49.6)	42 (31.0)	55 (40.6)	7500	16500	20000	**1FE1082-4WF ■ 1 - 6 B A ■**	0.00559 (0.0495)	15.1 (33.3)
24.5 (32.9)	24.5 (32.9)	42 (31.0)	55 (40.6)	5600	10700	20000	**1FE1082-4WK ■ 1 - 6 B A ■**	0.00559 (0.0495)	15.1 (33.3)
15.5 (20.8)	15.5 (20.8)	42 (31.0)	55 (40.6)	3500	7800	20000	**1FE1082-4WN ■ 1 - 6 B A ■**	0.00559 (0.0495)	15.1 (33.3)
12 (16.1)	12 (16.1)	42 (31.0)	55 (40.6)	2700	5900	15000	**1FE1082-4WP ■ 1 - 6 B A ■**	0.00559 (0.0495)	15.1 (33.3)
8.8 (11.8)	8.8 (11.8)	42 (31.0)	55 (40.6)	2000	4500	11000	**1FE1082-4WR ■ 1 - 6 B A ■**	0.00559 (0.0495)	15.1 (33.3)
28 (37.5)	28 (37.5)	63 (46.5)	83 (61.2)	4200	9600	20000	**1FE1083-4WN ■ 1 - 6 B A ■**	0.00847 (0.0750)	22 (48.5)
38 (51.0)	38 (51.0)	84 (62.0)	110 (81.1)	4300	9800	20000	**1FE1084-4WN ■ 1 - 6 B A ■**	0.01118 (0.0989)	28.5 (62.8)
35 (46.9)	35 (46.9)	78 (57.5)	110 (81.1)	4300	8200	20000	**1FE1084-4WP ■ 1 - 6 B A ■**	0.01118 (0.0989)	28.5 (62.8)
30 (40.2)	30 (40.2)	84 (62.0)	110 (81.1)	3400	7600	18000	**1FE1084-4WQ ■ 1 - 6 B A ■**	0.01118 (0.0989)	28.5 (62.8)
26.4 (35.4)	26.4 (35.4)	84 (62.0)	110 (81.1)	3000	5900	15000	**1FE1084-4WT ■ 1 - 6 B A ■**	0.01118 (0.0989)	28.5 (62.8)
22.9 (30.7)	23 (30.8)	84 (62.0)	110 (81.1)	2600	4900	12000	**1FE1084-4WV ■ 1 - 6 B A ■**	0.01118 (0.0989)	28.5 (62.8)
38 (51.0)	38 (51.0)	105 (77.4)	138 (102)	3500	7700	18000	**1FE1085-4WN ■ 1 - 6 B A ■**	0.01388 (0.1228)	35 (77.2)
33 (44.3)	33 (44.3)	105 (77.4)	140 (103)	3000	6500	16000	**1FE1085-4WQ ■ 1 - 6 B A ■**	0.01388 (0.1228)	35 (77.2)
24 (32.2)	24 (52.9)	105 (77.4)	140 (103)	2200	4700	12000	**1FE1085-4WT ■ 1 - 6 B A ■**	0.01388 (0.1228)	35 (77.2)

• Standard protection: 2 × Pt1000 [1]	**1**
• Full protection: 2 × Pt1000 + 3 × PTC thermistor triplet [2]	**3**
• Universal protection [3]	**5**
• Operation without VPM module	**0**
• Operation with VPM module	**1**
• Delivery of stator + rotor [1) 4) 5)]	**6**
• Stator with cooling jacket [1) 7)]	**B**
• Without rotor sleeve	**A**
• Free cable ends, length 1.5 m (4.92 ft) [6]	
Cable outlet at larger outer diameter of cooling jacket	**0**
Cable outlet at smaller outer diameter of cooling jacket	**1**
• Free cable ends, length 0.5 m (1.64 ft) [6]	
Cable outlet at larger outer diameter of cooling jacket	**2**
Cable outlet at smaller outer diameter of cooling jacket	**3**

S1 = Continuous duty
S6 = Intermittent duty:
Type 1FE105/1FE107: Duty cycle time 1 min
Type 1FE108: Duty cycle time 2 min

For footnotes, see next page.

© Siemens 2022

Motor type (repeated)	Rated current for duty type		**Voltage Protection Module (VPM)**	**SINAMICS S120 Motor Module**	
				Required rated current	**Booksize format**
					Internal air cooling For further components, see SINAMICS S120 drive system
	I_{rated} S1	S6-40%		I_{rated} S1 to n_{max}	
	A	A		A	Article No.
SIMOTICS M-1FE1 High Speed series – Water cooling					
1FE1051-4HC...	25	34.5	–	45 [8]	**6SL3120-1TE24-5AC0**
1FE1051-4HF...	21	29	VPM 120	45 [8]	**6SL3120-1TE24-5AC0**
1FE1051-4WN...	12	17	VPM 120	18 [8]	**6SL3120-1TE21-8AD0**
1FE1052-4HD...	57	75	–	132 [8]	**6SL3120-1TE31-3AA3**
1FE1052-4HG...	44	59	VPM 120	85 [8]	**6SL3120-1TE28-5AA3**
1FE1052-4WK...	30	39	VPM 120	45 [8]	**6SL3120-1TE24-5AC0**
1FE1052-4WN...	20	26	VPM 120	30 [8]	**6SL3120-1TE23-0AD0**
1FE1053-4HH...	46	63	VPM 120	85 [8]	**6SL3120-1TE28-5AA3**
1FE1053-4WJ...	36	49	VPM 120	45 [8]	**6SL3120-1TE24-5AC0**
1FE1053-4WN...	29	38	VPM 120	45 [8]	**6SL3120-1TE24-5AC0**
1FE1072-4WH...	64	96	VPM 120	85 [8]	**6SL3120-1TE28-5AA3**
1FE1072-4WL...	45	68	VPM 120	45	**6SL3120-1TE24-5AC0**
1FE1072-4WN...	36	54	VPM 120	45	**6SL3120-1TE24-5AC0**
1FE1072-4WV...	18	26.5	VPM 120	18	**6SL3120-1TE21-8AD0**
1FE1073-4WL...	83	124	VPM 120	132 [8]	**6SL3120-1TE31-3AA3**
1FE1073-4WN...	65	97	VPM 120	85 [8]	**6SL3120-1TE28-5AA3**
1FE1073-4WT...	30	44	VPM 120	30	**6SL3120-1TE23-0AD0**
1FE1074-4WM...	97	144	VPM 120	132	**6SL3120-1TE31-3AA3**
1FE1074-4WN...	91	136	VPM 120	132	**6SL3120-1TE31-3AA3**
1FE1074-4WR...	58	85	VPM 120	60	**6SL3120-1TE26-0AC0**
1FE1074-4WT...	53	77	VPM 120	60	**6SL3120-1TE26-0AC0**
1FE1074-4WV...	45	66	VPM 120	45	**6SL3120-1TE24-5AC0**
1FE1075-4WQ...	51	75	VPM 120	60	**6SL3120-1TE26-0AC0**
1FE1082-4WF...	81	115	VPM 120	85	**6SL3120-1TE28-5AA3**
1FE1082-4WK...	55	78	VPM 120	60	**6SL3120-1TE26-0AC0**
1FE1082-4WN...	42	60	VPM 120	45	**6SL3120-1TE24-5AC0**
1FE1082-4WP...	30	43	VPM 120	30	**6SL3120-1TE23-0AD0**
1FE1082-4WR...	24	34	VPM 120	24	**6SL3120-1TE22-4AD0**
1FE1083-4WN...	77	110	VPM 120	85	**6SL3120-1TE28-5AA3**
1FE1084-4WN...	105	150	VPM 120	132	**6SL3120-1TE31-3AA3**
1FE1084-4WP...	79	120	VPM 120	85	**6SL3120-1TE28-5AA3**
1FE1084-4WQ...	83	119	VPM 120	85	**6SL3120-1TE28-5AA3**
1FE1084-4WT...	60	85	VPM 120	60	**6SL3120-1TE26-0AC0**
1FE1084-4WV...	50	71	VPM 120	60	**6SL3120-1TE26-0AC0**
1FE1085-4WN...	105	150	VPM 120	132	**6SL3120-1TE31-3AA3**
1FE1085-4WQ...	85	120	VPM 120	85	**6SL3120-1TE28-5AA3**
1FE1085-4WT...	60	85	VPM 120	60	**6SL3120-1TE26-0AC0**
				Motor Module: Single Motor Module	**1**

[1] Standard scope of supply: Encapsulated winding with 2 × Pt1000 (1 × reserve).
[2] Full protection option, application example: Load at motor standstill, external tripping unit required; Article No.: 3RN2013-1GW30.
[3] Universal protection option: Full protection + NTC PT3-51F + NTC K227.
[4] Ordering spare stator parts: 1FE1…-…..-7.W.
[5] Ordering spare rotor parts: 1FE1…-…..-3W..
[6] For cable design, see Configuration Manual.
[7] Stator without cooling jacket on request.
[8] PWM clock cycle must be increased.
[9] Series reactor required, see Configuration Manual.

© Siemens 2022

Selection and ordering data

Rated power for duty type P_{rated} S1 kW (hp)	S6-40% kW (hp)	Rated torque M_{rated} S1 Nm (lb_f-ft)	S6-40% Nm (lb_f-ft)	Rated speed n_{rated} rpm	Speed without VPM, max. $n_{max\ Inv}$ rpm	Speed, max. n_{max} rpm	**SIMOTICS M-1FE1 synchronous built-in motors** Article No.	Moment of inertia rotor J kgm^2 (lb_f-in-s^2)	Weight, approx. stator + rotor without sleeve m kg (lb)
SIMOTICS M-1FE1 High Speed series – Water cooling – ΔT = 105 K – Line voltage 400 V 3 AC, operation on Active Line Module									
16 (21.5)	16 (21.5)	45 (33.2)	60 (44.3)	3400	7300	18000	**1FE1092-4WP ■ 1 - 6 B R ■**	0.00916 (0.08) [8]	30 (66.1)
10.5 (14.1)	10.5 (14.1)	50 (36.9)	64 (47.2)	2000	4100	10000	**1FE1092-4WV ■ 1 - 6 B R ■**	0.00916 (0.08) [8]	30 (66.1)
35.3 (47.3)	35 (46.9)	75 (55.3)	103 (76.0)	4500	9500	18000	**1FE1093-4WH ■ 1 - 6 B ■ ■**	0.01350 (0.12) [8]	41.6 (91.7)
27.5 (36.9)	27.5 (36.9)	75 (55.3)	103 (76.0)	3500	7200	18000	**1FE1093-4WM ■ 1 - 6 B ■ ■**	0.01350 (0.12) [8]	41.6 (91.7)
26 (34.9)	26 (34.9)	75 (55.3)	103 (76.0)	3300	6800	16000	**1FE1093-4WN ■ 1 - 6 B ■ ■**	0.01350 (0.12) [8]	41.6 (91.7)
46 (61.7)	46 (61.7)	100 (73.8)	137 (101)	4400	9200	18000	**1FE1094-4WK ■ 1 - 6 B ■ ■**	0.01808 (0.16) [8]	48.5 (107)
40 (53.6)	40 (53.6)	100 (73.8)	137 (101)	3800	7600	18000	**1FE1094-4WL ■ 1 - 6 B ■ ■**	0.01808 (0.16) [8]	48.5 (107)
26 (34.9)	26 (34.9)	100 (73.8)	125 (92.2)	2500	5100	13000	**1FE1094-4WS ■ 1 - 6 B ■ ■**	0.01808 (0.16) [8]	48.5 (107)
18 (24.1)	18 (24.1)	95 (70.1)	119 (87.8)	1800	3900	10000	**1FE1094-4WU ■ 1 - 6 B ■ ■**	0.01808 (0.16) [8]	48.5 (107)
46 (61.7)	46 (61.7)	125 (92.2)	171 (126)	3500	7300	18000	**1FE1095-4WN ■ 1 - 6 B ■ ■**	0.02242 (0.20) [8]	56.8 (125)
52 (69.7)	52 (69.7)	150 (111)	206 (152)	3300	6800	16000	**1FE1096-4WN ■ 1 - 6 B ■ ■**	0.02700 (0.24) [8]	64.2 (142)
38.5 (51.6)	45 (60.3)	102 (75.2)	142 (105)	3600	7200	16000	**1FE1103-4WN ■ 1 - 6 B A ■**	0.01589 (0.14)	34 (75.0)
35 (46.9)	38 (51.0)	100 (73.8)	130 (95.9)	3300	6200	15000	**1FE1103-4WQ ■ 1 - 6 B A ■**	0.01589 (0.14)	34 (75.0)
26 (34.9)	29 (21.4)	100 (73.8)	130 (95.9)	2500	4700	12000	**1FE1103-4WT ■ 1 - 6 B A ■**	0.01589 (0.14)	34 (75.0)
75 (101)	75 (101)	136 (100)	175 (129)	5300	9300	16000	**1FE1104-4WL ■ 1 - 6 B A ■**	0.02098 (0.19)	42.5 (93.7)
54 (72.4)	64 (85.8)	136 (100)	189 (139)	3800	7700	16000	**1FE1104-4WN ■ 1 - 6 B A ■**	0.02098 (0.19)	42.5 (93.7)
53.4 (71.6)	64 (85.8)	170 (125)	236 (174)	3000	6100	16000	**1FE1105-4WN ■ 1 - 6 B A ■**	0.02608 (0.23)	52 (115)
46.3 (62.1)	55 (73.8)	170 (125)	230 (170)	2600	4900	12200	**1FE1105-4WQ ■ 1 - 6 B A ■**	0.02608 (0.23)	52 (115)
41 (55.0)	44 (59.0)	170 (125)	230 (170)	2300	4300	10500	**1FE1105-4WS ■ 1 - 6 B A ■**	0.02608 (0.23)	52 (115)
72.6 (97.4)	85 (114)	204 (150)	283 (209)	3400	6900	16000	**1FE1106-4WN ■ 1 - 6 B A ■**	0.03147 (0.28)	61.5 (136)
62 (83.1)	66 (88.5)	204 (150)	270 (199)	2900	5400	14000	**1FE1106-4WR ■ 1 - 6 B A ■**	0.03147 (0.28)	61.5 (136)
56.5 (75.8)	60 (44.3)	200 (148)	270 (199)	2700	5100	12500	**1FE1106-4WS ■ 1 - 6 B A ■**	0.03147 (0.28)	61.5 (136)
25 (33.5)	30 (40.2)	200 (148)	270 (199)	1200	2500	6000	**1FE1106-4WY ■ 1 - 6 B A ■**	0.03147 (0.28)	61.5 (136)
63 (84.5)	75 (101)	200 (148)	275 (203)	3000	6100	14000	**1FE1124-4WN ■ 1 - 6 B A ■**	0.05112 (0.45)	62.6 (138)
52.4 (70.3)	55.9 (75.0)	200 (148)	275 (203)	2500	4900	12000	**1FE1124-4WQ ■ 1 - 6 B A ■**	0.05112 (0.45)	62.6 (138)
78.5 (105)	90 (121)	250 (184)	345 (254)	3000	5800	14000	**1FE1125-4WN ■ 1 - 6 B A ■**	0.06337 (0.56)	76 (168)
65.5 (87.8)	82 (110)	250 (184)	345 (254)	2500	5300	12500	**1FE1125-4WP ■ 1 - 6 B A ■**	0.06337 (0.56)	76 (168)
57.6 (77.2)	65 (87.2)	250 (184)	345 (254)	2200	4200	10000	**1FE1125-4WQ ■ 1 - 6 B A ■**	0.06337 (0.56)	76 (168)
94 (126)	112 (150) [9]	300 (221)	410 (302) [9]	3000	6100	14000	**1FE1126-4WN ■ 1 - 6 B A ■**	0.07604 (0.67)	90 (198)
78.5 (105)	100 (134) [9]	300 (221)	410 (302) [9]	2500	5400	12500	**1FE1126-4WP ■ 1 - 6 B A ■**	0.07604 (0.67)	90 (198)
63 (84.5)	82 (110)	300 (221)	410 (302)	2000	4400	10000	**1FE1126-4WQ ■ 1 - 6 B A ■**	0.07604 (0.67)	90 (295)

• Standard protection: 2 × Pt1000 [1]	**1**
• Full protection: 2 × Pt1000 + 3 × PTC thermistor triplet [2]	**3**
• Universal protection [3]	**5**
• Delivery of stator + rotor [1) 4) 5)]	**6**
• Stator with cooling jacket [1) 7)]	**B**
• Without rotor sleeve	**A**
• Without rotor sleeve, d_i = 80 mm (3.15 in) for 1FE109.-4W... only	**R**
• Free cable ends, length 1.5 m (4.92 ft) [6]	
Cable outlet at larger outer diameter of cooling jacket	**0**
Cable outlet at smaller outer diameter of cooling jacket	**1**
• Free cable ends, flexible, length 0.5 m (1.64 ft) [6]	
Cable outlet at larger outer diameter of cooling jacket	**2**
Cable outlet at smaller outer diameter of cooling jacket	**3**

S1 = Continuous duty
S6 = Intermittent duty:
Type 1FE109/1FE110/1FE112: Duty cycle time 2 min

For footnotes, see next page.

© Siemens 2022

Motor type (repeated)	Rated current for duty type		**Voltage Protection Module (VPM)**	**SINAMICS S120 Motor Module**	
				Required rated current	**Booksize format**
					Internal air cooling For further components, see SINAMICS S120 drive system
	I_{rated} S1	S6-40%		I_{rated} S1 to n_{max}	
	A	A		A	Article No.
SIMOTICS M-1FE1 High Speed series – Water cooling					
1FE1092-4WP...	41	58	VPM 120	45	**6SL3120-1TE24-5AC0**
1FE1092-4WV...	24	35	VPM 120	24	**6SL3120-1TE22-4AD0**
1FE1093-4WH...	83	120	VPM 120	85	**6SL3120-1TE28-5AA3**
1FE1093-4WM...	64	92	VPM 120	85	**6SL3120-1TE28-5AA3**
1FE1093-4WN...	60	86	VPM 120	60	**6SL3120-1TE26-0AC0**
1FE1094-4WK...	108	156	VPM 120	132	**6SL3120-1TE31-3AA3**
1FE1094-4WL...	90	130	VPM 120	132	**6SL3120-1TE31-3AA3**
1FE1094-4WS...	60	85	VPM 120	60	**6SL3120-1TE26-0AC0**
1FE1094-4WU...	45	64	VPM 120	45	**6SL3120-1TE24-5AC0**
1FE1095-4WN...	108	156	VPM 120	132	**6SL3120-1TE31-3AA3**
1FE1096-4WN...	120	173	VPM 120	132	**6SL3120-1TE31-3AA3**
1FE1103-4WN...	84	127	VPM 120	85	**6SL3120-1TE28-5AA3**
1FE1103-4WQ...	68	98	VPM 120	85	**6SL3120-1TE28-5AA3**
1FE1103-4WT...	53	75	VPM 120	60	**6SL3120-1TE26-0AC0**
1FE1104-4WL...	140	200	VPM 200	200	**6SL3120-1TE32-0AA4**
1FE1104-4WN...	120	181	VPM 200	132	**6SL3120-1TE31-3AA3**
1FE1105-4WN...	120	180	VPM 200	132	**6SL3120-1TE31-3AA3**
1FE1105-4WQ...	95	135	VPM 120	132	**6SL3120-1TE31-3AA3**
1FE1105-4WS...	84	120	VPM 120	85	**6SL3120-1TE28-5AA3**
1FE1106-4WN...	159	240	VPM 200	200	**6SL3120-1TE32-0AA4**
1FE1106-4WR...	128	184	VPM 200	132	**6SL3120-1TE31-3AA3**
1FE1106-4WS...	120	170	VPM 200	132	**6SL3120-1TE31-3AA3**
1FE1106-4WY...	60	85	VPM 200	60	**6SL3120-1TE26-0AC0**
1FE1124-4WN...	135	198	VPM 200	200	**6SL3120-1TE32-0AA4**
1FE1124-4WQ...	110	162	VPM 200	132	**6SL3120-1TE31-3AA3**
1FE1125-4WN...	162	240	VPM 200	200	**6SL3120-1TE32-0AA4**
1FE1125-4WP...	147	215	VPM 200	200	**6SL3120-1TE32-0AA4**
1FE1125-4WQ...	116	169	VPM 200	132	**6SL3120-1TE31-3AA3**
1FE1126-4WN...	200	295 [9]	VPM 200	200	**6SL3120-1TE32-0AA4**
1FE1126-4WP...	180	265 [9]	VPM 200	200	**6SL3120-1TE32-0AA4**
1FE1126-4WQ...	147	215	VPM 200	200	**6SL3120-1TE32-0AA4**

Motor Module:	
Single Motor Module	**1**

[1] Standard scope of supply: Encapsulated winding with 2 × Pt1000 (1 × reserve).
[2] Full protection option, application example: Load at motor standstill, external tripping unit required; Article No.: 3RN2013-1GW30.
[3] Universal protection option: Full protection + NTC PT3-51F + NTC K227.
[4] Ordering spare stator parts: 1FE1…-…..-7.W.
[5] Ordering spare rotor parts: 1FE1…-…..-3W..
[6] For cable design, see Configuration Manual.
[7] Stator without cooling jacket on request.
[8] For moment of inertia for version R without rotor sleeve d_i = 80 mm (3.15 in), see Configuration Manual.
[9] Observe the Motor Module limit.

© Siemens 2022

Selection and ordering data

Rated power for duty type		Rated torque	Torque at low speeds for duty type	Rated speed	Speed without VPM, max.	Speed, max.	**SIMOTICS M-1FE2 synchronous built-in motors**	Moment of inertia rotor with C sleeve	Weight, stator with cooling jacket
P_{rated} S1	S6-40%	M_{rated} S1	S6-40%	n_{rated}	$n_{max\ Inv}$	n_{max}		J	m
kW (hp)	kW (hp)	Nm (lb_f-ft)	Nm (lb_f-ft)	rpm	rpm	rpm	Article No.	kgm^2 (lb_f-in-s^2)	kg (lb)
SIMOTICS M-1FE2 High Torque series – Water cooling – ΔT = 100 K – Line voltage 400 V 3 AC, operation on Active Line Module									
68 (91.2)	85.9 (115)	640 (472)	916 (676)	1000	2000	4200	**1FE2182-8LH ■ ■ - ■ ■ C 1**	0.75 (6.64)	110 (243)
34 (45.6)	40.8 (54.7)	650 (479)	925 (682)	500	1000	2400	**1FE2182-8LN ■ ■ - ■ ■ C 1**	0.75 (6.64)	110 (243)
88 (118)	110 (243)	840 (620)	1190 (878)	1000	2000	4200	**1FE2183-8LH ■ ■ - ■ ■ C 1**	0.9 (7.97)	130 (287)
44.5 (59.7)	52.4 (70.3)	840 (620)	1197 (883)	500	1000	2400	**1FE2183-8LN ■ ■ - ■ ■ C 1**	0.9 (7.97)	130 (287)
105 (141)	130.9 (176)	1000 (738)	1425 (1051)	1000	2000	4200	**1FE2184-8LH ■ ■ - ■ ■ C 1**	1.05 (9.29)	150 (331)
85 (114)	106.4 (143)	1010 (1354)	1437 (1060)	800	1600	4010	**1FE2184-8LK ■ ■ - ■ ■ C 1**	1.05 (9.29)	150 (331)
53 (71.1)	62.8 (84.2)	1010 (745)	1437 (1060)	500	1000	2400	**1FE2184-8LN ■ ■ - ■ ■ C 1**	1.05 (9.29)	150 (331)
122 (164)	149.7 (201)	1160 (856)	1653 (1219)	1000	1900	4200	**1FE2185-8LH ■ ■ - ■ ■ C 1**	1.2 (10.62)	170 (375)
87 (117)	106.3 (143)	1180 (870)	1665 (1228)	700	1400	3440	**1FE2185-8LL ■ ■ - ■ ■ C 1**	1.2 (10.62)	170 (375)
62 (83.1)	73.8 (99.0)	1180 (870)	1646 (1214)	500	1000	2420	**1FE2185-8LN ■ ■ - ■ ■ C 1**	1.2 (10.62)	170 (375)
142 (190)	171.7 (230)	1350 (996)	1932 (1425)	1000	1900	4200	**1FE2186-8LH ■ ■ - ■ ■ C 1**	1.35 (11.95)	190 (419)
86 (115)	104.9 (141)	1370 (1010)	1936 (1428)	600	1200	3000	**1FE2186-8LM ■ ■ - ■ ■ C 1**	1.35 (11.95)	190 (419)
72 (96.6)	84.8 (114)	1370 (1010)	1941 (1432)	500	1000	2400	**1FE2186-8LN ■ ■ - ■ ■ C 1**	1.35 (11.95)	190 (419)
159 (213)	193.7 (260)	1510 (1114)	2151 (1586)	1000	1900	4200	**1FE2187-8LH ■ ■ - ■ ■ C 1**	1.49 (13.19)	210 (463)
80 (107)	100 (134)	1530 (1128)	2156 (1590)	500	1100	2670	**1FE2187-8LN ■ ■ - ■ ■ C 1**	1.49 (13.19)	210 (463)

Winding protection • Standard protection 2 × Pt1000 [1)] • Full protection: 2 × Pt1000 + 3 × PTC thermistor triplet [2)] • Universal protection [3)]	**1** **3** **5**
Type of connection (cable outlet [6)]) • Cable outlet large outer diameter or for version without cooling jacket • Cable outlet small outer diameter	**0** **1**
Delivery • Delivery of stator + rotor [1) 4) 5) 7)]	**1**
Stator • Stator without cooling jacket • Stator with cooling jacket	**A** **C**
Rotor • Standard rotor sleeve	**C**
Version	**1**

S1 = Continuous duty
S6 = Intermittent duty:

Additional options
Z = X15 ... cable length 1.5 m (4.92 ft) [8)]
Z = T00 ... Rotor pre-balanced

For footnotes, see next page.

© Siemens 2022

Motor type (repeated)	Rated current for duty type		**Voltage Protection Module (VPM)**	**SINAMICS S120 Motor Module**		
				Quantity Motor Modules	Required rated current	**Booksize format** Internal air cooling For further components, see SINAMICS S120 drive system
	I_{rated} S1	S6-40%			I_{rated} S1 to n_{max}	
	A	A			A	Article No.
SIMOTICS M-1FE2 High Torque series – Water cooling						
1FE2182-8LH...	145	214	VPM 200	1	200	**6SL3120-1TE32-0AA4**
1FE2182-8LN...	73	108	VPM 120	1	85	**6SL3120-1TE28-5AA3**
1FE2183-8LH...	189	278	VPM 200	1	200	**6SL3120-1TE32-0AA4**
1FE2183-8LN...	95	140	VPM 200	1	132	**6SL3120-1TE31-3AA3**
1FE2184-8LH...	225	333	2 × VPM 200	2	2 × 132	**6SL3120-1TE31-3AA3**
1FE2184-8LK...	190	280	VPM 200	1	200	**6SL3120-1TE32-0AA4**
1FE2184-8LN...	114	168	VPM 200	1	132	**6SL3120-1TE31-3AA3**
1FE2185-8LH...	250	368	2 × VPM 200	2	2 × 132	**6SL3120-1TE31-3AA3**
1FE2185-8LL...	189	278	VPM 200	1	200	**6SL3120-1TE32-0AA4**
1FE2185-8LN...	132	194	VPM 200	1	132	**6SL3120-1TE31-3AA3**
1FE2186-8LH...	290	424	2 × VPM 200	2	2 × 200	**6SL3120-1TE32-0AA4**
1FE2186-8LM...	192	283	VPM 200	1	200	**6SL3120-1TE32-0AA4**
1FE2186-8LN...	154	227	VPM 200	1	200	**6SL3120-1TE32-0AA4**
1FE2187-8LH...	325	479	2 × VPM 200	2	2 × 200	**6SL3120-1TE32-0AA4**
1FE2187-8LN...	190	280	VPM 200	1	200	**6SL3120-1TE32-0AA4**

Motor Module: Single Motor Module	**1**

6

1) Standard scope of supply: Impregnated winding with 2 × Pt1000 (1 × reserve).
2) Full protection option, application example: Load at motor standstill, external tripping unit required; Article No.: 3RN2013-1GW30.
3) Universal protection option: Full protection + NTC PT3-51F + NTC K227.
4) Ordering spare stator parts: 1FE2…-…..-2...
5) Ordering spare rotor parts: 1FE2…-…..-3...
6) For cable design, see Configuration Manual, standard cable length = 0.5 m (1.64 ft).
7) Standard rotor is not pre-balanced.
8) Not for 1FE2187-8LH.

© Siemens 2022

Overview

SIMOTICS M-1FE2 is the new generation of built-in motors in asynchronous technology for directly driven motor spindles in turning, milling, grinding and multitasking machines.

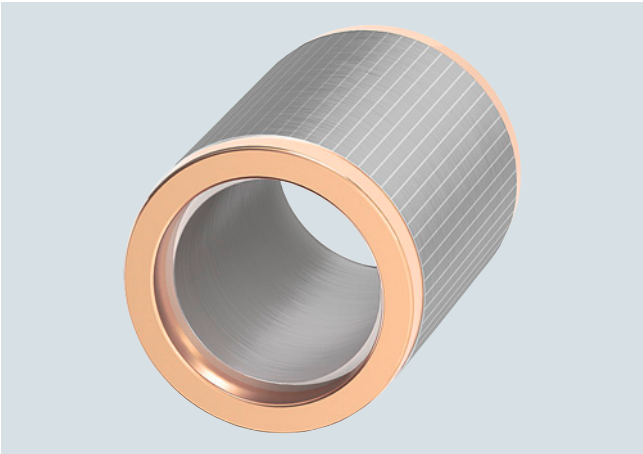

SIMOTICS M-1FE2 asynchronous built-in motor, CU rotor

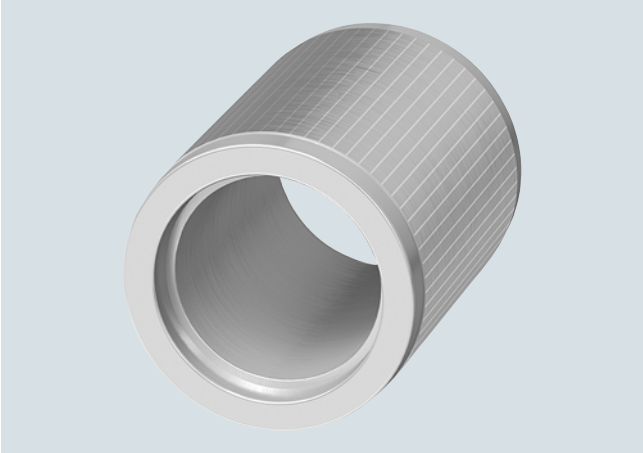

SIMOTICS M-1FE2 asynchronous built-in motor, AL rotor

Compared with the previous 1PH2 series, they are characterized by significantly improved torque density, higher maximum speeds, a wider constant power range and higher overload.

In addition to the SIMOTICS M-1FE1/M-1FE2 built-in synchronous motors, this means that applications for machines in job shops and mold making, as well as turning, milling and grinding machines can be addressed more intensively.

Benefits

- Wide range of applications and high surface quality
- Optimum heat dissipation for maximum precision (potted winding)
- Wide continuous power range and high overload:
  - for constant cutting performance during turning
  - short ramp-up times for milling
- Safe temperature monitoring with Pt1000 (option: PTC or NTC)
- Compact motor length compared with previous 1PH2 series and large internal rotor bore:
  - for higher spindle stiffness and advantageous for bar capacity of automatic turning machines
- Coordinated system comprising SINUMERIK, SINAMICS S120 and motor
  - ensuring fast commissioning.

Application

The water-cooled SIMOTICS M-1FE2 asynchronous built-in motors are used in combination with the SINAMICS S120 drive system for applications that require the highest quality of machining, accuracy and running smoothness, as well as very short ramp-up times.

Mainly used for:

- Flexible combination for applications with high speeds or high torques
- Job shops and mold making
  - (high accuracy and high surface quality)
- Turning, milling and grinding applications

Design

All sizes are available in both winding versions, star connection and star-delta connection:

The following variants are possible:

- Stator version without cooling jacket (on request also with cooling jacket)
- Rotor version without rotor sleeve
  - in copper for the highest torque version
  - in aluminum for the highest speeds (on request also with rotor sleeve)
- Flexible connection cables 0.5/1.5 m (1.64/4.92 ft)

Further installation lengths are possible on request.

© Siemens 2022

Technical specifications

Product name	SIMOTICS M-1FE2 asynchronous built-in motor
Machine type	Asynchronous spindle with squirrel-cage rotor aluminum or copper
Constant power range	Up to 1:8 (star connection) or 1:10 for star-delta connection (8-pin)
Recommended coolant inlet temperature, approx.	20 °C (68 °F) (max. 40 °C (104 °F) with derating)
Standard protection temperature monitoring	2 × Pt1000 PTC thermistors in the stator winding, 1 × spare
Full protection optional Application example: Machining when motor is stationary	In addition to standard protection 3 × PTC thermistor triplet Can be evaluated, e.g., using a thermal motor protection unit: Article No.: 3RN2013-1GW30
Universal protection optional	Full protection + NTC PT3-51F + NTC K227
Stator winding insulation in accordance with EN 60034-1 (IEC 60034-1)	Temperature class 155 (F) for a coolant inlet temperature of 20 °C (68 °F) (max. 40 °C (104 °F) with derating)
Type of construction (cf. ISO)	Individual components: Stator, rotor
Degree of protection in accordance with IEC 60034-5	IP00
Balance quality of rotor in accordance with ISO 1940-1	Non-pre-balanced, balancing over external balancing planes
Encoder system	Typical: Hollow-shaft incremental encoder sin/cos 1 V_{pp} (not included in scope of delivery)
Motor connection	Free cable ends with length of 0.5/1.5 m (1.64/4.92 ft)
Rating plate	2 units, enclosed separately

Characteristic curves

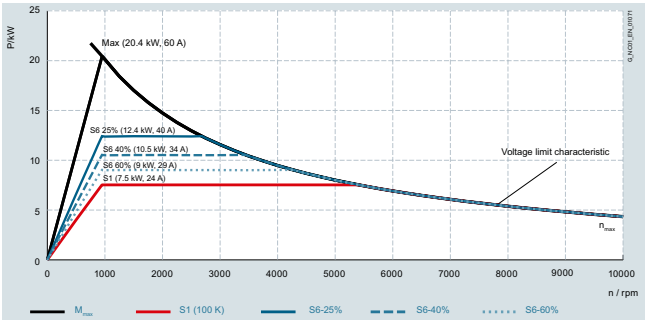

Power characteristic SIMOTICS M-1FE2093-8AG.. - ...1

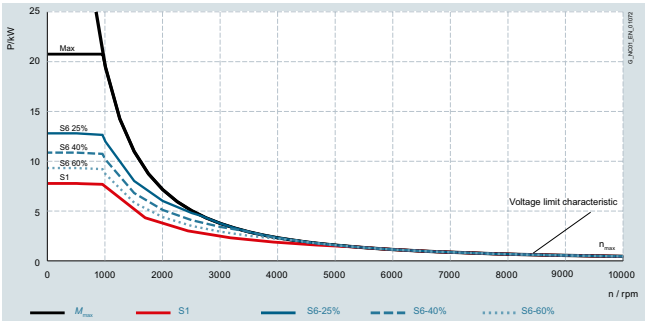

Torque characteristic SIMOTICS M-1FE2093-8AG.. - ...1

More information

You can find more information on the internet at:

https://siemens.com/online-support

https://siemens.com/dt-configurator

You can find the Configuration Manual (technical specifications and characteristic curves) for
SIMOTICS S-1FE2 for SINAMICS S120 under:

https://support.industry.siemens.com/cs/ww/en/view/109783767

You can find the Hardware Installation Manual for
SIMOTICS S-1FE2 for SINAMICS S120 under:

https://support.industry.siemens.com/cs/document/109475767

For a list of cooling unit manufacturers, please refer to
Liquid cooling for SIMOTICS M-1PH8/-1FE/-1PH2 and 2SP1.

© Siemens 2022

Selection and ordering data

Rated power for Y or Y/Δ operation for duty type		Rated torque for Y or Y/Δ operation for duty type		Rated speed for Y or Y/Δ operation	Speed range for constant power for Y or Y/Δ operation, max.	Speed, max. for Y or Y/Δ operation	**SIMOTICS M-1FE2 asynchronous built-in motors**	Moment of inertia rotor without sleeve	Weight, stator + rotor
P_{rated} S1	S6-40%	M_{rated} S1	S6-40%	n_{rated}	N2 (S1)	n_{max}		J	m
kW (hp)	kW (hp)	Nm (lb_f-ft)	Nm (lb_f-ft)	rpm	rpm	rpm	Article No.	kgm^2 (lb_f-in-s^2)	kg (lb)
SIMOTICS M-1FE2 High Torque series aluminum rotor – Water cooling – ΔT = 105 K – Line voltage 400 V 3 AC, operation on Active Line Module									
7.5 (10.1)	10.5 (14.1)	75 (55)	106 (78)	950	5400	10000	**1FE2093-8AG ■ ■ - 1 B A 1**	0.02028 (0.17949)	22.4 (49.4)
11/11.5 (14.8/15.4)	15.5/16.1 (20.8/21.5)	65/23 (48/17)	92/32 (68/24)	1600/4750	7400/13300	10000/19000	**1FE2093-8AM ■ ■ - 1 B A 2**	0.02028 (0.17949)	22.4 (49.4)
11 (14.8)	15.4 (20.7)	95 (70)	134 (99)	1100	8300	10000	**1FE2094-8AJ ■ ■ - 1 B A 1**	0.02662 (0.23560)	28.5 (62.8)
15/17 (20.1/22.8)	21.1/23.8 (28.3/31.9)	90/34 (66/25)	126/48 (93/35)	1600/4750	9700/14300	10000/19000	**1FE2094-8AM ■ ■ - 1 B A 2**	0.02662 (0.23560)	28.5 (62.8)
SIMOTICS M-1FE2 High Torque series copper rotor – Water cooling – ΔT = 105 K – Line voltage 400 V 3 AC, operation on Active Line Module									
18.5 (24.8)	26 (34.9)	136 (100)	191 (141)	1300	5700	10000	**1FE2094-8CJ ■ ■ - 1 B A 1**	0.03765 (0.33323)	32.2 (71)
15/18.5 (20.1/24.8)	21.1/26 (28.3/34.9)	136/55 (100/41)	192/78 (142/58)	1050/3200	5100/13700	10000/16000	**1FE2094-8CG ■ ■ - 1 B A 2**	0.03765 (0.33323)	32.2 (71)
22.5 (30.1)	31.6 (42.4)	172 (127)	241 (178)	1250	4500	10000	**1FE2095-8CJ ■ ■ - 1 B A 1**	0.04437 (0.39271)	38.3 (84.4)
18.5/22 (24.8/29.5)	26/30.8 (34.9/41.3)	17/70 (13/52)	248/98 (183/72)	1000/3000	5400/16000	10000/16000	**1FE2095-8CG ■ ■ - 1 B A 2**	0.04437 (0.39271)	38.3 (84.4)
33 (44.3)	46.3 (62)	420 (310)	590 (435)	750	2600	6000	**1FE2145-8CE ■ ■ - 1 B A 1**	0.26674 (2.36084)	99.1 (218.5)
22/25 (29.5/33.5)	30.8/35.3 (41.3/47.3)	420/159 (310/117)	589/225 (434/166)	500/1500	1800/4500	6000/10000	**1FE2145-8CC ■ ■ - 1 B A 2**	0.26674 (2.36084)	99.1 (218.5)
48 (64.4)	67.4 (90.4)	611 (451)	859 (634)	750	2800	6000	**1FE2147-8CE ■ ■ - 1 B A 1**	0.35886 (3.17617)	129.6 (285.7)
32/35 (42.9/46.9)	44.8/49.4 (60/66.2)	611/257 (451/190)	856/363 (631/268)	500/1300	1500/4300	6000/10000	**1FE2147-8CC ■ ■ - 1 B A 2**	0.35886 (3.17617)	129.6 (285.7)

Winding protection • Standard protection: Stator winding with 2 × Pt1000 (1 × reserve) • Full protection: 2 × Pt1000 + 3 × PTC thermistor triplet [1)] • Universal protection full protection + NTC PT3-51F + NTC K227	**1** **3** **5**				
Type of connection • Free cable ends, length 0.5 m (1.64 ft) • Free cable ends, length 1.5 m (4.92 ft)		**0** **2**			
Delivery • Delivery of stator + rotor			**1**		
Stator version • Cast winding without cooling jacket[2)]				**B**	
Rotor version • Rotor core without sleeve, inside diameter unmachined [3)]					**A**
Connection/winding • Y connection • Can be switched between Y and Δ					**1** **2**

© Siemens 2022

Motor type (repeated)	Rated torque for Y or Y/Δ operation for duty type		**SINAMICS S120 Motor Module**	
			Required rated current	**Booksize format** Internal air cooling For further components, see SINAMICS S120 drive system
	I_{rated} S1 A	I_{rated} S6-40% A	I_{rated} S1 A	Article No.
SIMOTICS M-1FE2 High Torque series aluminum rotor – Water cooling				
1FE2093-8AG...	24	34	24	–
1FE2093-8AM...	30/28.5	42/40	30 [4]	–
1FE2094-8AJ...	39	55	45	**6SL3120-1TE24-5AC0**
1FE2094-8AM...	45/45	65/63	45 [4]	**6SL3120-1TE24-5AC0**
SIMOTICS M-1FE2 High Torque series copper rotor – Water cooling				
1FE2094-8CJ...	53	74	60	**6SL3120-1TE26-0AC0**
1FE2094-8CG...	45/45	63/63	45 [4]	**6SL3120-1TE24-5AC0**
1FE2095-8CJ...	59	83	60	**6SL3120-1TE26-0AC0**
1FE2095-8CG...	60/56	84/78	60 [4]	**6SL3120-1TE26-0AC0**
1FE2145-8CE...	85	119	85	**6SL3120-1TE28-5AA3**
1FE2145-8CC...	60/58	84/81	60	**6SL3120-1TE26-0AC0**
1FE2147-8CE...	130	180	132	**6SL3120-1TE31-3AA3**
1FE2147-8CC...	85/81	119/113	85	**6SL3120-1TE28-5AA3**

Motor Module:	
Single Motor Module	**1**

[1] Application example: Load at motor standstill, external tripping unit required; Article No.: 3RN2013-1GW30.
[2] Stator with cooling jacket on request.
[3] Rotor with sleeve and/or finish-machining on request.
[4] Star/delta changeover required, incl. data set switchover with PWM 4 > 8 kHz with 62.5 µs.

© Siemens 2022

Overview

Active parts (rotor and stator) of SIMOTICS M-1PH2 asynchronous built-in motors

SIMOTICS M-1PH2 built-in motors for turning machines are liquid-cooled squirrel-cage AC asynchronous motors. These built-in motors have been specially developed for variable-speed operation of main spindles on turning machines.

Benefits

- Compact design obtained by dispensing with mechanical components such as coupling, belt drive, gearbox and spindle encoder
- High power density as a result of liquid cooling
- The absence of drive transverse forces permits extremely high accuracy on the workpiece thanks to smooth, accurate spindle motion even at very low speeds.
- Extremely short ramp-up and braking times
- Full rated torque is continuously available, even at standstill
- Simple servicing by replacing complete motor spindles
- Increased rigidity of the spindle drive, achieved by mounting the motor components between the main spindle bearings
- C-axis compatibility with hollow-shaft measuring system
- Low noise emissions due to absence of machine elements
- Torque is transmitted to the spindle mechanically without backlash by means of a cylindrical stepped press fit. The rotor is mounted on the spindle by thermal shrinking. The bond can be released by pressure-oil injection without affecting the joint surfaces.
- The rotor with sleeve is pre-balanced and can be removed and subsequently remounted.
- The rotor with sleeve is finished-machined. The rotor outer diameter need not be finished after mounting.

Design

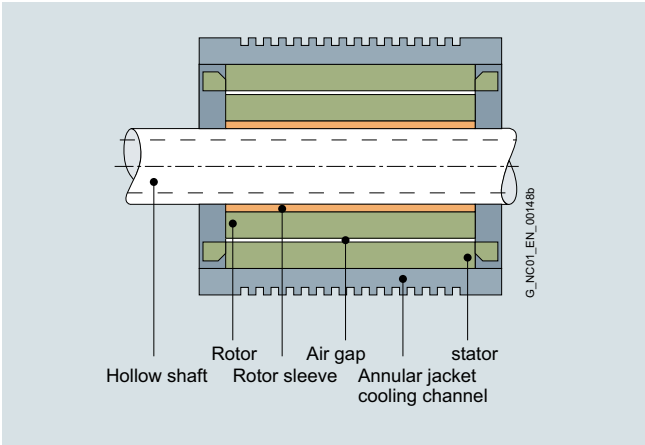

Application

SIMOTICS M-1PH2 built-in motors are used for machines requiring an extremely high standard of machining quality, accuracy and running smoothness

- Turning machines
- Grinding machines

Technical specifications

Product name	SIMOTICS M-1PH2 built-in motor
Coolant inlet temperature	Because of the formation of condensation, we recommend a coolant inlet temperature of approximately 25 °C (77 °F), depending on the ambient conditions.
Cooling water pressure at inlet, max.	7 bar
Coolant flow rate (water)	8 l/min (2.11 US gallons/min.)
Connection thread	Dependent on cooling unit used
Temperature monitoring	2 Pt1000 temperature sensors in the stator winding, 1 × as reserve
Stator winding insulation in accordance with EN 60034-1 (IEC 60034-1)	Temperature class 155 (F) for a coolant inlet temperature up to 25 °C (77 °F)
Recommended motor encoder	Hollow shaft system (not included in scope of supply)
Type of construction (cf. ISO)	Individual components: Stator, rotor
Motor connection type	Free cable ends with length of 0.5 m (19.7 in) or 1.5 m (59.1 in)
Balance quality of rotor in accordance with ISO 1940-1	1PH2113 to 1PH2118: G 2.5 reference speed 3600 rpm
Degree of protection in accordance with IEC 60034-5	IP00
Rating plate	1 unit enclosed separately

Refer to Liquid cooling for a list of cooling unit manufacturers.

© Siemens 2022

Characteristic curves

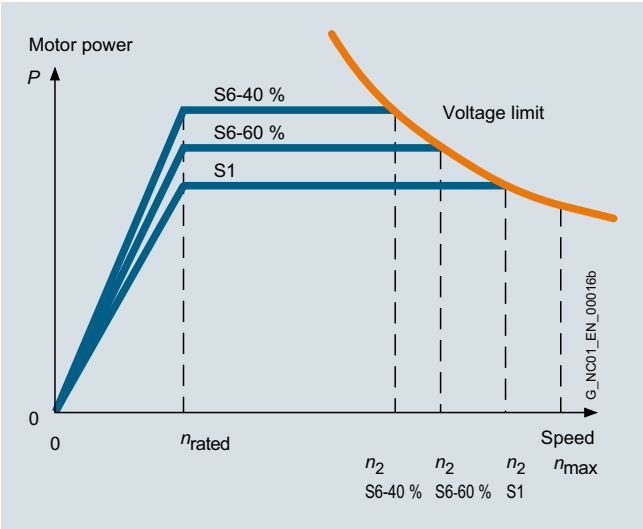

Typical speed/power graph for AC motors[1)]

The graph shows the typical relationship between motor speed and drive power for SIMOTICS M-1PH2 motors for the following duty types in accordance with IEC 60034-1:

S1: Continuous duty

S6: Continuous duty with intermittent load and a relative duty factor of 60% (S6-60%) or 40% (S6-40%) with a maximum duty cycle time of 10 minutes.

SIMOTICS M-1PH2 motor	Rated speed	Attainable speed at rated power in duty type		
Type	n_{rated}	n_2[2)]		
	rpm	S1 rpm	S6-60% rpm	S6-40% rpm
1PH2113	1500	5400	4800	4400
1PH2115		4500	4100	3700
1PH2117		4700	4200	3800
1PH2118		5000	4500	4100

[1)] For further configuration information, see the SIMOTICS M-1PH2 Motors Configuration Manual.

[2)] Values indicated by the speed/power graph are valid in systems with an Active Line Module and a 400 V 3 AC supply system.
If you are using a Smart Line Module, proceed in accordance with the SIMOTICS M-1PH2 Motors Configuration Manual.

© Siemens 2022

Selection and ordering data

Rated speed	Speed, max.	Rated power for duty type[1]				**SIMOTICS M-1PH2 asynchronous built-in motor for direct drive** **Standard type**	Rated torque[1]	
n_{rated}	n_{max}	P_{rated}					M_{rated}	
		S1	S1 ΔT=105 K	S6-60%	S6-40%			ΔT=105 K
rpm	rpm	kW (hp)	kW (hp)	kW (hp)	kW (hp)	Article No.	Nm (lb_f-ft)	Nm (lb_f-ft)
1PH2 water cooling – Line voltage 400 V 3 AC, operation on Active Line Module								
1500	10000	15.1 (20.2)	18.5 (24.8)	17 (22.8)	19 (25.5)	**1PH2113-6WF2■**	95 (70.1)	118 (87.0)
		16.5 (22.1)	21.5 (28.8)	18.5 (24.8)	21 (28.2)	**1PH2115-6WF2■**	105 (77.4)	137 (101)
		18.1 (24.3)	23.7 (31.8)	20.5 (27.5)	23 (30.8)	**1PH2117-6WF2■**	115 (84.8)	151 (111)
		23.6 (31.6)	30.9 (41.4)	26.0 (34.9)	29.5 (39.6)	**1PH2118-6WF2■**	146 (108)	197 (145)

Free cable ends:	
Length: 1.5 m (4.92 ft)	**1**
Length: 0.5 m (1.64 ft) (preferred type)	**2**

[1] Data for ΔT = 70 K unless otherwise specified.

© Siemens 2022

Motor type (repeated)	Moment of inertia of rotor	Weight (rotor and stator), approx.	Rated current for duty type[1)]			SINAMICS S120 Motor Module	
						Required rated output current for S1 duty	**Booksize format** Internal air cooling For further components, see SINAMICS S120 drive system
	J	m	I_{rated} S1	S6-60%	S6-40%	I_{rated}	
	kgm^2 (lb_f-in-s^2)	kg (lb)	A	A	A	A	Article No.
1PH2 water cooling							
1PH2113-6W...	0.066 (0.584)	51 (112)	56	61	67	60	**6SL3120-1TE26-0AC0**
1PH2115-6W...	0.073 (0.646)	56 (123)	55	60	66	60	**6SL3120-1TE26-0AC0**
1PH2117-6W...	0.079 (0.699)	62 (137)	60	67	74	60	**6SL3120-1TE26-0AC0**
1PH2118-6W...	0.100 (0.885)	78 (172)	82	90	100	85	**6SL3120-1TE28-5AA3**

Motor Module:	
Single Motor Module	**1**

© Siemens 2022

Overview

The 2SP1 motor spindle product range comprises compact standard motor spindles for milling machines that can be used as an alternative to belt-driven spindles for rough cutting and precise fine machining applications.

The 2SP1 motor spindle contains all the classical elements of a motor spindle, such as a tool interface, tool clamping and release mechanism, spindle bearings suitable for absorbing the machining forces, water-cooled drive motor, spindle casing for fixing and sensors for indexing and monitoring tool changeover.

The motor spindles are available in 2 diameters of 200 mm (7.87 in) (2SP120) and 250 mm (9.84 in) (2SP125) and are offered with a range of different torques and speeds to match the respective milling machine family. The motor spindles are ideally matched to the performance levels of SINAMICS S120.

The complete product range of 2SP1 motor spindles was developed in cooperation with and is manufactured at Weiss Spindeltechnologie GmbH.

Benefits

The 2SP1 motor spindles offer the following important user benefits over conventional belt-driven solutions:

- Compact spindle solution and everything integrated in the spindle box
- Fewer components and easy installation
- Economical standard solution
- Optional digital sensor signal interface (DRIVE-CLiQ) simplifies commissioning, reduces hardware requirements in the control cabinet, and enables spindle monitoring
- Higher speed and shorter start-up times as compared with conventional belt-driven or gear solutions
- Economical pneumatic tool release mechanism or optional fast hydraulic tool release mechanism
- Worldwide system delivery including spindle mechanics from a single source – from Siemens
- Extremely short tool change times with 2SP210 thanks to 2-channel technology and clamping set with optional latching capability

Application

The main application area for 2SP1 motor spindles are main spindles for milling machines and machining centers in the job shop area of the machine tools sector.

The 2SP120 motor spindles are particularly suitable for the area of light metal machining at low torque and high speeds.

The 2SP125 motor spindles are characterized by a high torque. The main area of application is in the machining of steel and castings.

Design

A key feature of 2SP1 motor spindles is their rugged design.

Depending on the version, the following options are available for 2SP1 motor spindles:

- Various tool interfaces
- Internal tool cooling
- External tool cooling

Integration

2SP1 motor spindles are generally compatible with:

- SINAMICS S120
- SINUMERIK 840D sl
- SINUMERIK ONE
- SINUMERIK MC

For the synchronous version of 2SP1 motor spindles, a VPM Voltage Protection Module must be used as the external module, see Voltage Protection Module VPM.

© Siemens 2022

Technical specifications

	2SP120	2SP125
Product name	Motor spindles	Motor spindles
Standard functions		
Speed, max.	15000 rpm	10000 rpm
Enclosure	Cartridge with flange mounting	Cartridge with flange mounting
Operating position	Horizontal/vertical	Horizontal/vertical
Tool holder	HSK A63	SK 40 for tools with asymmetrical slot nuts
Tool clamping device	• Release using pneumatic cylinder, 6 bar • Clamp using cup-spring assembly	• Release using pneumatic cylinder, 6 bar • Clamp using cup-spring assembly
Tool taper cleaning	Compressed air through the draw bar 5 ... 6 bar	Compressed air through the draw bar 5 ... 6 bar
Cooling with water	• Max. 5 bar, 10 l/min (2.64 US gallons/min) • Max. 25% anti-corrosion agent Clariant Antifrogen N or Tyfocor • Filter grade 100 µm	• Max. 5 bar, 10 l/min (2.64 US gallons/min) • Max. 25% anti-corrosion agent Clariant Antifrogen N or Tyfocor • Filter grade 100 µm
Recommended coolant inlet temperature, approx.	25 °C (77 °F) (depending on the ambient temperature)	25 °C (77 °F) (depending on the ambient temperature)
Standard protection – temperature monitoring	• Motor thermal sensor Pt1000 • PTC for full thermal protection • NTC PT3-51F • NTC K227	• Motor thermal sensor Pt1000
Stator winding insulation in accordance with EN 60034-1 (IEC 60034-1)	Temperature class 155 (F) for a coolant inlet temperature of 25 °C (77 °F)	Temperature class 155 (F) for a coolant inlet temperature of 25 °C (77 °F)
Degree of protection in accordance with IEC 60034-5	IP64 (in working area) IP53 (behind the spindle flange)	IP64 (in working area) IP53 (behind the spindle flange)
Bearing lubrication	Grease, permanent lubrication	Grease, permanent lubrication
Front bearing seal	Sealing air 1 ... 1.5 m^3/h, filter grade 8 µm	Sealing air 1 ... 1.5 m^3/h, filter grade 8 µm
Encoder system	Hollow-shaft measuring system, incremental, sin/cos 1 V_{pp} 256 S/R with zero mark	Hollow-shaft measuring system, incremental, sin/cos 1 V_{pp} 256 S/R with zero mark
Clamping status monitoring		
• Analog sensors	• Tool clamped • Draw bar in the release position • Clamped without tool	–
• Digital sensors	• Position of release piston	• Tool clamped • Draw bar in the release position • Clamped without tool
Connections for media		
• Cooling	2 × hose plug-in connector, Ø 12/10 mm (0.47/0.39 in)	2 × G 1/2" (Ø 9 mm (0.35 in))
• Sealing air	1 × G 1/8" radial/Ø 5 mm (0.20 in) axial	1 × G 1/8" (Ø 8 mm (0.31 in))
• Air purge	1 × G 1/4"	1 × G 1/4"
• Release tool	1 × G 1/4"	1 × M16×1.5
• Clamp tool	1 × G 1/8"	1 × G 1/8"
Electrical connections	• Power via cable 1.5 m (4.92 ft) • Sensors through signal plug	• Power via cable 1.5 m (4.92 ft) • Sensors through signal plug
Options		
Increased max. speed	18000 rpm	15000 rpm (with HSK A63)
Internal tool cooling	• 50 bar, up to 54 l/min (14.3 US gallons/min) • Filter grade 50 µm according to -/16/13 ISO 4406 • 1 × G 1/4" cooling lubricant • 1 × G 1/8" leakage	• 50 bar, up to 54 l/min (14.3 US gallons/min) • Filter grade 50 µm according to -/16/13 ISO 4406 • 1 × G 1/4" cooling lubricant • 1 × G 1/8" leakage
External tool cooling	• Ring with 6 adjustable nozzles • 5 bar • Filter grade 50 µm according to -/16/13 ISO 4406	–
Tool clamping device	• Release using hydraulic cylinder, 80 bar • Clamp using cup-spring assembly • 1 × G 1/4", release tool • 1 × G 1/4", clamp tool	–
Tool interface	–	BT 40, CAT 40, HSK A63

S/R = signals/revolution

© Siemens 2022

Selection and ordering data

Spindle diameter	Rated power Star/delta for duty type		Rated torque Star/delta for duty type		Rated speed Star/delta	Maximum speed	**2SP1 motor spindles Standard type**
	P_{rated}		M_{rated}		n_{rated}	n_{max}	
	S1	S6-40%	S1	S6-40%			
mm (in)	kW (hp)	kW (hp)	Nm (lb_f-ft)	Nm (lb_f-ft)	rpm	rpm	Article No.
2SP1 synchronous – Water cooling							
200 (7.87)	12.0/– (16.1/–)	12.0/– (16.1/–)	42/– (31.0/–)	55/– (40.6/–)	2700/–	15000	**2SP1202-1HA■ ■-1D ■ ■**
	15.5/– (20.8/–)	15.5/– (20.8/–)	42/– (31.0/–)	55/– (40.6/–)	3500/–	18000	**2SP1202-1HB■ ■-2D ■ ■**
	26.4/– (35.4/–)	26.4/– (35.4/–)	84/– (62.0/–)	110/– (81.1/–)	3000/–	15000	**2SP1204-1HA■ ■-1D ■ ■**
	35.0/– (46.9/–)	35.0/– (46.9/–)	78/– (57.5/–)	110/– (81.1/–)	4300/–	18000	**2SP1204-1HB■ ■-2D ■ ■**
2SP1 synchronous – Water cooling							
250 (9.84)	26.0/– (34.9/–)	29.0/– (38.9/–)	100/– (73.8/–)	130/– (95.9/–)	2500/–	10000	**2SP1253-1HA 0 ■-0■ K 2**
	35.0/– (46.9/–)	38.0/– (51.0/–)	100/– (73.8/–)	130/– (95.9/–)	3300/–	15000	**2SP1253-1HB 0 ■-1D K 2**
	46.3/– (62.1/–)	55.0/– (73.8/–)	170/– (125/–)	236/– (174/–)	2600/–	10000	**2SP1255-1HA 0 ■-0■ K 2**
	53.4/– (71.6/–)	64.0/– (85.8/–)	170/– (125/–)	236/– (174/–)	3000/–	15000	**2SP1255-1HB 0 ■-1D K 2**

Tool clamping and release mechanism:	
Pneumatic (only for 2SP125)	**0**
Pneumatic (only for 2SP120)	**2**
Hydraulic (only for 2SP120)	**3**
Cooling:	
Closed cooling jacket	**1**
Closed cooling jacket and internal tool cooling	**3**
Closed cooling jacket and ring for external tool cooling (only for 2SP120)	**4**
Closed cooling jacket, internal tool cooling and ring for external tool cooling (only for 2SP120)	**5**
Tool interfaces:	
Tool interface SK 40	**A**
Tool interface BT 40 45°	**B**
Tool interface CAT 40	**C**
Tool interface HSK A63	**D**
Tool interface BT 40 30°	**E**
Tool interface HSK A63, latching (only for 2SP120)	**R**
Sensors:	
Sensor: Tool clamped/draw bar in the release position/clamped without tool	**D**
As for D + sensor: Position release piston (only for 2SP120)	**F**
Digital sensing mechanism tool clamping status	**K**
Analog sensing mechanism tool clamping status	**L**
Analog sensing mechanism tool clamping status + Pt100 for bearing temperature	**M**
Digital sensing mechanism tool clamping status + Pt100 for bearing temperature	**N**
SMI24 for digital transmission of the sensor signals + Sensing mechanism tool clamping status + Pt100 for bearing temperature	**J**
Type of connection:	
Permanently connected cable, sensor cable with signal connector, length: 1.5 m (4.92 ft)	**2**
Power cable with exposed core ends	**6**
Power cable with connector (2SP1202: Connector size 1.5 / 2SP1204: Connector size 3)	

© Siemens 2022

Motor type (repeated)	Moment of inertia	Weight,[1] approx.	Rated current Star/delta for duty type		**Voltage Protection Module**	**SINAMICS S120 Motor Module**	
						Required rated current for S1 duty	**Booksize format** Internal air cooling For further components, see SINAMICS S120 drive system
	J	m	I_{rated}			I_{rated}	
			S1	S6-40%			
	kgm^2 (lb$_f$-in-s^2)	kg (lb)	A	A		A	Article No.
2SP1 synchronous – Water cooling							
2SP1202-1HA...	0.015 (0.133)	83 (183)	30/–	43/–	VPM 120	30	**6SL312 1 -1TE23-0AD0**
2SP1202-1HB...	0.015 (0.133)	83 (183)	42/–	60/–	VPM 120	45	**6SL312 1 -1TE24-0AC0**
2SP1204-1HA...	0.023 (0.204)	101 (223)	60/–	85/–	VPM 120	60	**6SL312 1 -1TE26-0AC0**
2SP1204-1HB...	0.023 (0.204)	101 (223)	79/–	120/–	VPM 120	85	**6SL312 1 -1TE28-5AA3**
2SP1 synchronous – Water cooling							
2SP1253-1HA...	0.037 (0.327)	130 (287)	53/–	75/–	VPM 120	60	**6SL312 1 -1TE26-0AC0**
2SP1253-1HB...	0.037 (0.327)	130 (287)	68/–	98/–	VPM 120	85	**6SL312 1 -1TE28-5AA3**
2SP1255-1HA...	0.055 (0.487)	165 (364)	95/–	135/–	VPM 120	132	**6SL312 1 -1TE31-3AA3**
2SP1255-1HB...	0.055 (0.487)	165 (364)	120/–	180/–	VPM 200	132	**6SL312 1 -1TE31-3AA3**

Motor Module:	
Single Motor Module	**1**

[1] No options included.
Internal tool cooling: + 1 kg (2.21 lb)
External tool cooling: + 8 kg (17.6 lb)

© Siemens 2022

Characteristic curves

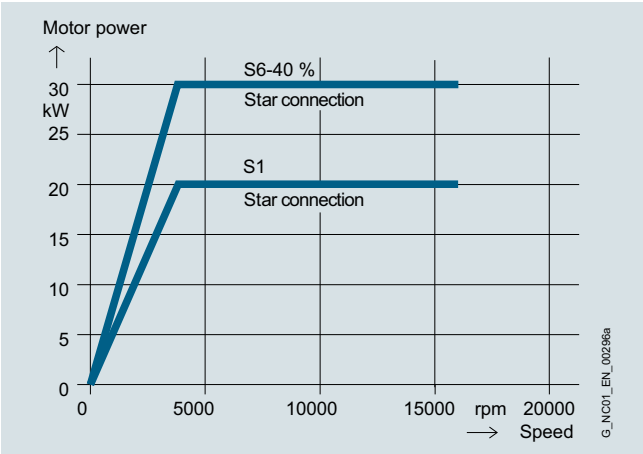

2SP1 motor spindles in synchronous design

More information

For names of cooler manufacturers, refer to
Liquid cooling for SIMOTICS M-1PH8/-1FE/-1PH2 and 2SP1

In addition to the standard motor spindles in the 2SP1 product range, it is also possible to use individually customized motor spindle designs.

For information about other motor spindles for turning, grinding, milling and drilling, please contact:

WEISS Spindeltechnologie GmbH
A Siemens Company
Birkenfelder Weg 14
96126 Maroldsweisach, Germany

Tel.: +49 9532 9229-0
Fax: +49 9532 9229-133
www.weissgmbh.com

© Siemens 2022

Overview

The voltage protection function is deployed on SIMOTICS M-1FE. motors and on the synchronous version of 2SP1 motor spindles with an EMF of $\hat{U}$ > 820 V to 2000 V (U_{rms} 570 V to 1400 V) in order to limit the DC link voltage in the drive system in the event of a fault.

If the line voltage fails with the motor operating at maximum speed, or if the drive system pulses are suppressed as a result of a line voltage failure, the synchronous motor feeds energy at high voltage back into the DC link.

The VPM detects that the DC link voltage is too high (DC > 820 V) and shorts the three motor feeder cables in order to brake the motor. The power remaining in the motor is converted to heat via the short circuit in the VPM and motor.

Integration

The VPM can be operated in conjunction with SINAMICS S120, and with SIMOTICS M-1FE motors and with 2SP1 motor spindles.
The VPM must be installed between the motor and drive system (maximum distance from drive system 1.5 m (4.92 ft)). 6FX8 shielded motor supply cables must be used in combination with the VPM.

The VPM can be used with:

- SINAMICS S120
- SINUMERIK 840D sl
- SINUMERIK ONE
- SINUMERIK MC

6

Technical specifications

Article No.	6SN1113-1AA00-1JA1	6SN1113-1AA00-1KA1	6SN1113-1AA00-1KC1
Product designation	Voltage Protection Module		
Product short term	VPM 120	VPM 200	VPM 200 DYNAMIC
Rated current, permissible	120 A	200 A	200 A
Short-circuit current, perm.	90 A	200 A	200 A
Degree of protection	IP20	IP20	IP20
Environment category according to IEC 60721-3-3	Class 3K5, condensation and icing excluded. Low air temperature 0 °C (32 °F).		
Ambient temperature, during			
• storage	-25 ... +55 °C (-13 ... +131 °F)	-25 ... +55 °C (-13 ... +131 °F)	-25 ... +55 °C (-13 ... +131 °F)
• transport	-25 ... +55 °C (-13 ... +131 °F)	-25 ... +55 °C (-13 ... +131 °F)	-25 ... +55 °C (-13 ... +131 °F)
• operation	0 ... 55 °C (32 ... 131 °F)	0 ... 55 °C (32 ... 131 °F)	0 ... 55 °C (32 ... 131 °F)
Dimensions			
• Height	300 mm (11.81 in)	300 mm (11.81 in)	300 mm (11.81 in)
• Width	150 mm (5.91 in)	250 mm (9.84 in)	250 mm (9.84 in)
• Depth	180 mm (7.09 in)	190 mm (7.48 in)	260 mm (10.24 in)
Net weight	6 kg (13.2 lb)	11 kg (24.3 lb)	12 kg (26.5 lb)
Certificate of suitability	cULus	cULus	cULus

Selection and ordering data

Description	Article No.
Voltage Protection Module	
• VPM 120	**6SN1113-1AA00-1JA1**
• VPM 200	**6SN1113-1AA00-1KA1**
• VPM 200 DYNAMIC For large cable cross-sections up to 50 mm²	**6SN1113-1AA00-1KC1**

© Siemens 2022

Two-speed gearbox for SIMOTICS M-1PH8 asynchronous motors

Application

Gearboxes increase the drive torque at low motor speeds and extend the range of constant power that the main spindle motor can deliver. The full cutting capacity of modern machine tools can therefore be utilized throughout the entire speed range.

Benefits

The performance features of the two-speed gearbox for SIMOTICS M-1PH8 asynchronous motors are as follows:

- Drive power up to 100 kW (134 hp)
- Constant power range at drive shaft up to 1:24
- Suitable for both directions of rotation
- Motor shaft heights SH 100 to SH 225
- Types IM B35 and IM V15 (IM V35 available on request)

The following advantages are gained by mounting the gearbox outside the spindle box:

- Easy adaptation to the machine tool
- Low noise and no temperature fluctuations due to gearing inside the headstock
- Separate lubrication systems for the main spindle (grease) and the change-speed gearbox (oil)
- Gear efficiency > 95%
- The drive power can also be transferred from the gearbox output via a gear wheel (on request) or coaxially via a flexible coupler rather than by a V-belt.

Design

The two-speed gearboxes have a planetary design. The power is distributed among several planet wheels from the central sun gear. Thanks to this gearing design, the gearboxes are extremely compact. The gear-changing device, a splined sleeve that moves axially, is of form-fit design.

Position 1: Gear ratio $i_1 = 4$
Position 2: Gear ratio $i_2 = 1$

The motor is flanged onto the gearbox by an adapter plate. The three-phase motor must be suitably prepared for gearbox mounting.

With shaft height SH 160 and above, motors in frame sizes IM B35 and IM V15 must be supported at the NDE to eliminate any mechanical stress.

Any transverse force imported into the gearbox has to be borne by the gearbox and transmitted to the machine base.

The motors for all 2K gearboxes must be full-key balanced with a feather key. The 2K 120, 2K 250, 2K 300, 2K 450 gearboxes are sealed so that the motor flange is also adequately sealed in the standard version.
Vertical mounting positions IM V15 and IM V35 require circulating lubrication of the gearboxes.

The standard version of the change-speed gearboxes up to and including the 2K 300 has a maximum circumferential backlash of 30 angular minutes (measured at the gear output). Several special versions suitable for milling or machining with cut interruption can be supplied on request:

- Reduced backlash with special features: max. 20'
- Reduced backlash for high performance: max. 15'

Design

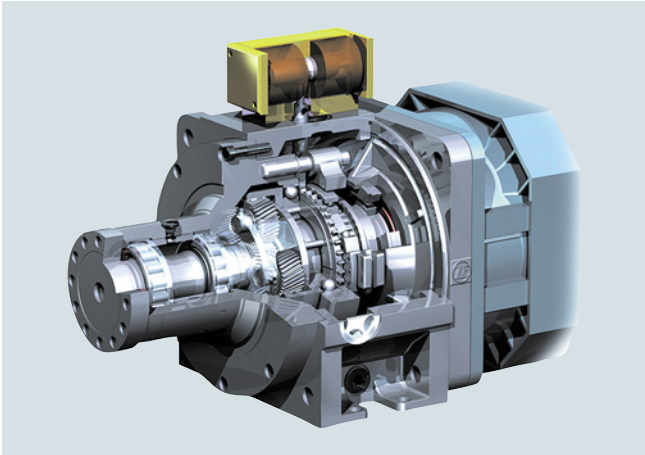

Profile of a planetary gearbox

The power unit (motor and gearbox) is supplied with vibration magnitude grade R in accordance with EN 60034-14 (IEC 60034-14). This is also the case when the motor is ordered with vibration magnitude grade S.

The belt pulley[1] must be a cup wheel type pulley. For mounting the pulley, the output shaft on the gearbox has a flange with an external centering spigot and tapped holes, for easy fitting and removal of the pulley.

Characteristic curves

The use of a change-speed gearbox permits the constant power range to be greatly increased.

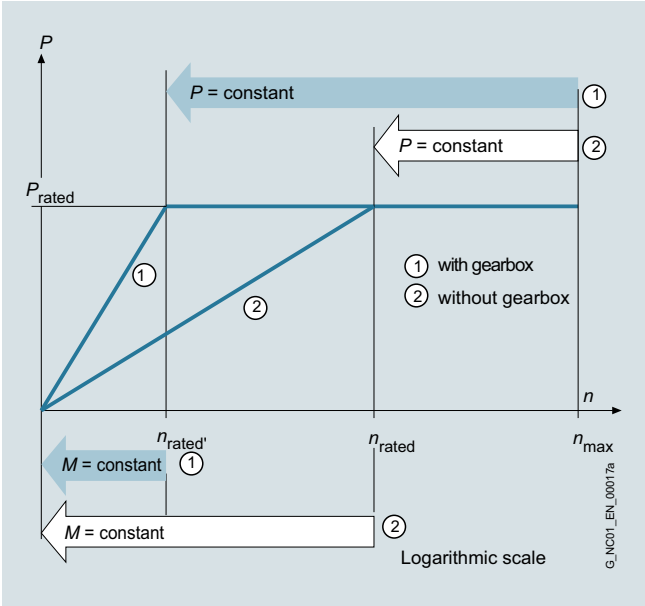

Power-speed graph

Legend:
n_{rated} Rated speed
$n_{rated'}$ Rated speed with two-stage gearbox
n_{max} Max. permissible speed
P_{rated} Rated power and constant power of motor in the speed range from n_{rated} to n_{max} or $n_{rated'}$ to n_{max}
M Torque

[1] Not included in scope of delivery.

© Siemens 2022

Technical specifications

Motor 1PH Shaft height SH	Gearbox ZF identifier_	Type	Speed, max.[1] Drive n_{max} rpm	Rated torque, permissible (S1 duty) Drive M Nm (lb_f-ft)	Output $i = 1$ M Nm (lb_f-ft)	Output $i = 4$ M Nm (lb_f-ft)	Maximum torque, permissible (S6-60% duty) Drive M Nm (lb_f-ft)	Output $i = 1$ M Nm (lb_f-ft)	Output $i = 4$ M Nm (lb_f-ft)	Moment of inertia gearbox Output $i = 1$ J kgm^2 (lb_f-in-s^2)	Output $i = 4$ J kgm^2 (lb_f-in-s^2)	Weight gearbox, approx. m kg (lb)
100	2K 120	2LG4312-...	8000	120 (88.5)	120 (88.5)	480 (354)	140 (103)	140 (103)	560 (413)	0.0110 (0.10)	0.0114 (0.10)	42 (92.6)
132	2K 250	2LG4315-...	6300	250 (184)	250 (184)	1000 (738)	400 (295)	400 (295)	1600 (1180)	0.0270 (0.24)	0.0570 (0.50)	68 (150)
160	2K 300	2LG4320-...	6300	300 (221)	300 (221)	1200 (885)	400 (295)	400 (295)	1600 (1180)	0.0270 (0.24)	0.0570 (0.50)	86 (190)
	2K 450	2LG4330-...	5000	450 (332)	450 (332)	1800 (1328)	630 (465)	630 (465)	630 (465)	not specified	not specified	155 (342)
180	2K 800	2LG4250-...	5000	800 (590)	800 (590)	3200 (2360)	900 (664)	900 (664)	3600 (2655)	0.1956 (1.73)	0.1766 (1.56)	175 (386)
	2K 801	2LG4260-...										
225	2K 802	2LG4270-...	On request									

For further binding technical specifications and configuring aid (e.g. lubrication, temperature rise and typical applications), please refer to the latest catalog supplied by ZF (Zahnradfabrik Friedrichshafen). The permissible characteristics of the motor and gearbox are a governing factor in the design of the complete drive unit (motor and gearbox).
For further information, refer to:
https://support.industry.siemens.com/cs/ww/en/view/98710138

With motor SIMOTICS M-1PH8166-1..2, for example, the rated torque must be reduced to 300 Nm (221 lb_f-ft). With motors of shaft height SH 132, please note that the maximum permissible speed of the 2K 250 gearbox for splash lubrication is 6300 rpm.

Option **K90** with motor shaft diameter 42 mm (1.65 in) is also required for the 2K 250 gearbox.

Selection and ordering data

Type of construction for the complete unit	Output flange dimension D_2 mm (in)	**Two-speed gearbox (standard version)**[2] Gear stage $i_1 = 4$ Article No.	ZF identifier
For SIMOTICS M-1PH810.-1. motors [3]			
IM B5, IM B35, IM V1, IM V15	100 (3.94)	**2LG4312-3CC31 (on request)**	2K 120
For SIMOTICS M-1PH813.-1. motors[3]			
IM B5, IM B35	118 (4.65)	**2LG4315-3FD11 (on request)**	2K 250
IM V1, IM V15	118 (4.65)	**2LG4315-3FC11 (on request)**	2K 250
For SIMOTICS M-1PH816.-1. motors[3]			
IM B35	130 (5.12)	**2LG4320-3JD11 (on request)**	2K 300
IM V15	130 (5.12)	**2LG4320-3JC11 (on request)**	2K 300
For SIMOTICS M-1PH8184-1. motors[4]			
IM B35, IM V15	180 (7.09)	**2LG4250-1JC11 (on request)**	2K 800
For SIMOTICS M-1PH8186-1. motors[4]			
IM B35, IM V15	180 (7.09)	**2LG4260-1JC21 (on request)**	2K 801

Motors with built-on planetary gearbox

The SIMOTICS M-1PH8 motors are also available with a flanged-on planetary gearbox. The motor/gearbox unit is function-tested. The entire drive unit, i.e. the SIMOTICS M-1PH8 asynchronous motor with flanged-on ZF gearbox, can be ordered directly from Siemens:

Siemens AG
Siemens Germany
RC-DE DI CS R&R RC3

Mr. Samuel Wiebe
+49 (521) 252-9382
samuel.wiebe@siemens.com
repaircenter.industry@siemens.com

[1] Higher drive speeds are allowed in some instances (refer to the ZF Catalog) with oil-cooled gearboxes and for gear ratios $i = 1$.

[2] Special versions, such as gearboxes with different torsional backlash, or other gear ratios ($i = 3.17$ or $i = 5.5$), are available on request.

[3] Requirements: DE shaft extension with feather key and full-key balancing.

[4] Requirements: DE shaft extension with feather key and full-key balancing. Bearing version for coupling output. Shaft and flange accuracy tolerance R. DE flange with shaft seal ring.

© Siemens 2022

SIMOTICS S-1FT7 with M17 and M23 signal connector – Natural cooling

Dimensional drawings

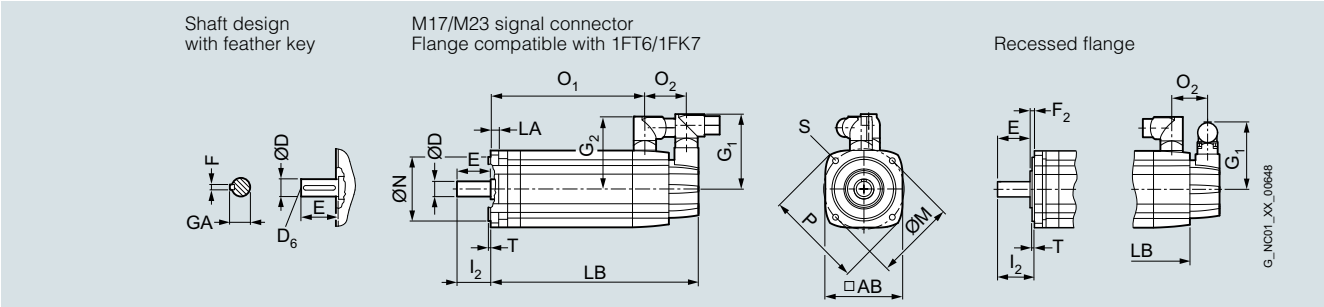

For motor		Dimensions in mm (inches)																		
											Signal connector		Connector size		Shaft extension DE				
											M17	M23	Size 1	Size 1.5					
Shaft height	Type	IEC	P	N	LA	M	AB	T	O_2	S	G_1	G_1	G_2	G_2	**D**	D_6	E	GA	F
SIMOTICS S-1FT7 natural cooling, with connector, without/with brake																			
36	1FT703.-5A		90 (3.54)	60 (2.36)	8 (0.31)	75 (2.95)	72 (2.83)	3 (0.12)	48 (1.89)	6.5 (0.26)	66 (2.60)	77 (3.03)	80 (3.15)	–	**14 (0.55)**	M5	30 (1.18)	16 (0.63)	5 (0.20)
48	1FT704.-5A		120 (4.72)	80 (3.15)	10 (0.39)	100 (3.94)	96 (3.78)	3 (0.12)	53 (2.09)	6.5 (0.26)	82 (3.23)	93 (3.66)	90 (3.54)	–	**19 (0.75)**	M6	40 (1.57)	21.5 (0.85)	6 (0.24)
63	1FT706.-5A		155 (6.10)	110 (4.33)	10 (0.39)	130 (5.12)	126 (4.96)	3.5 (0.14)	53 (2.09)	9 (0.35)	82 (3.23)	93 (3.66)	104 (4.09)	–	**24 (0.94)**	M8	50 (1.97)	27 (1.06)	8 (0.31)
80	1FT708.-5A		195 (7.68)	130 (5.12)	11.5 (0.45)	165 (6.50)	155 (6.10)	3.5 (0.14)	51 (2.01)	11 (0.43)	82 (3.23)	93 (3.66)	119 (4.69)	140 (5.51)	**32 (1.26)**	M12	58 (2.28)	35 (1.38)	10 (0.39)
100	1FT710.-5A		245 (9.65)	180 (7.09)	13 (0.51)	215 (8.46)	196 (7.72)	4 (0.16)	56 (2.20)	14 (0.55)	82 (3.23)	93 (3.66)	–	160 (6.30)	**38 (1.50)**	M12	80 (3.15)	41 (1.61)	10 (0.39)

			Recessed flange						Flange compatible with 1FT6/1FK7				
					without brake		with brake			without brake		with brake	
Shaft height	Type	IEC	F_2	l_2	LB	O_1	LB	O_1	l_2	LB	O_1	LB	O_1
36	1FT7034		5.5 (0.22)	36.5 (1.44)	189 (7.44)	127 (5.00)	216 (8.50)	154 (6.06)	30 (1.18)	195 (7.68)	133 (5.24)	222 (8.74)	160 (6.30)
	1FT7036				237 (9.33)	175 (6.89)	264 (10.39)	202 (7.95)		243 (9.57)	181 (7.13)	270 (10.63)	208 (8.19)
48	1FT7042		5.5 (0.22)	46 (1.81)	163 (6.42)	96 (3.78)	195 (7.68)	128 (5.04)	40 (1.57)	169 (6.65)	102 (4.02)	201 (7.91)	134 (5.28)
	1FT7044				213 (8.39)	146 (5.75)	245 (9.65)	178 (7.01)		219 (8.62)	152 (5.98)	251 (9.88)	184 (7.24)
	1FT7046				253 (9.96)	186 (7.32)	285 (11.22)	218 (8.58)		259 (10.20)	192 (7.56)	291 (11.46)	224 (8.82)
63	1FT7062		6 (0.24)	56.5 (2.22)	167 (6.57)	99 (3.90)	202 (7.95)	135 (5.31)	50 (1.97)	173 (6.81)	106 (4.17)	208 (8.19)	141 (5.55)
	1FT7064				198 (7.80)	131 (5.16)	233 (9.17)	166 (6.54)		205 (8.07)	137 (5.39)	240 (9.45)	173 (6.81)
	1FT7066				230 (9.06)	162 (6.38)	265 (10.43)	198 (7.80)		236 (9.29)	169 (6.65)	272 (10.71)	204 (8.03)
	1FT7068				277 (10.91)	210 (8.27)	312 (12.28)	245 (9.65)		284 (11.18)	216 (8.50)	319 (12.56)	252 (9.92)
80	1FT7082		6 (0.24)	64.5 (2.54)	184 (7.24)	124 (4.88)	241 (9.49)	176 (6.93)	58 (2.28)	196 (7.72)	130 (5.12)	248 (9.76)	183 (7.20)
	1FT7084				236 (9.29)	175 (6.89)	293 (11.54)	228 (8.98)		247 (9.72)	182 (7.17)	299 (11.77)	234 (9.21)
	1FT7086				287 (11.30)	227 (8.94)	345 (13.58)	279 (10.98)		299 (11.77)	234 (9.21)	351 (13.82)	286 (11.26)
100	1FT7102		6.5 (0.26)	87 (3.43)	209 (8.23)	144 (5.67)	266 (10.47)	196 (7.72)	80 (3.15)	221 (8.70)	151 (5.94)	273 (10.75)	203 (7.99)
	1FT7105				296 (11.65)	231 (9.09)	353 (13.90)	283 (11.14)		307 (12.09)	238 (9.37)	360 (14.17)	290 (11.42)
	1FT7108				365 (14.37)	300 (11.81)	422 (16.61)	352 (13.86)		377 (14.84)	307 (12.09)	429 (16.89)	359 (14.13)

© Siemens 2022

Dimensional drawings

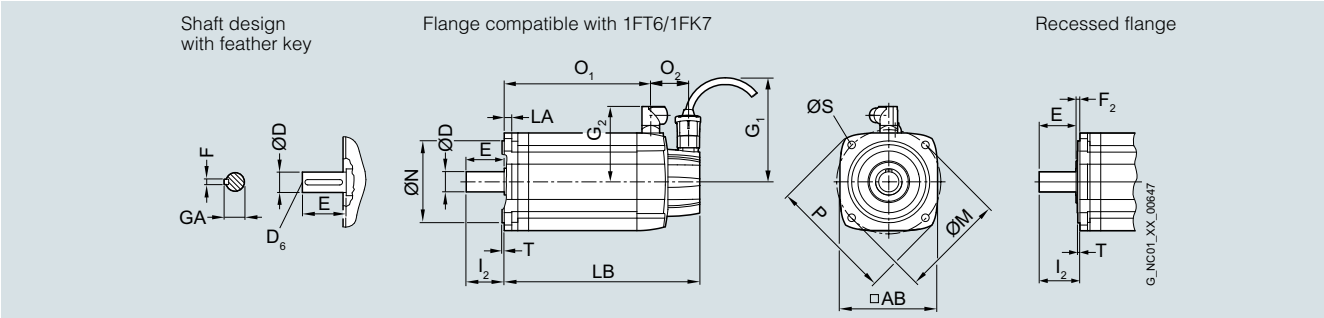

For motor		Dimensions in mm (inches)										Connector size		Shaft extension DE				
												Size 1	Size 1.5					
Shaft height	Type	IEC	P	N	LA	M	AB	T	O_2	S	G_1	G_2	G_2	**D**	D_6	E	GA	F
SIMOTICS S-1FT7 natural cooling, with connector, without/with brake																		
36	1FT703.-5A		90 (3.54)	60 (2.36)	8 (0.31)	75 (2.95)	72 (2.83)	3 (0.12)	48 (1.89)	6.5 (0.26)	104.5 (4.11)	80 (3.15)	–	**14 (0.55)**	M5	30 (1.18)	16 (0.63)	5 (0.20)
48	1FT704.-5A		120 (4.72)	80 (3.15)	10 (0.39)	100 (3.94)	96 (3.78)	3 (0.12)	53 (2.09)	6.5 (0.26)	104.5 (4.11)	90 (3.54)	–	**19 (0.75)**	M6	40 (1.57)	21.5 (0.85)	6 (0.24)
63	1FT706.-5A		155 (6.10)	110 (4.33)	10 (0.39)	130 (5.12)	126 (4.96)	3.5 (0.14)	53 (2.09)	9 (0.35)	104.5 (4.11)	104 (4.09)	–	**24 (0.94)**	M8	50 (1.97)	27 (1.06)	8 (0.31)
80	1FT708.-5A		195 (7.68)	130 (5.12)	11.5 (0.45)	165 (6.50)	155 (6.10)	3.5 (0.14)	51 (2.01)	11 (0.43)	104.5 (4.11)	119 (4.69)	140 (5.51)	**32 (1.26)**	M12	58 (2.28)	35 (1.38)	10 (0.39)
100	1FT710.-5A		245 (9.65)	180 (7.09)	13 (0.51)	215 (8.46)	196 (7.72)	4 (0.16)	56 (2.20)	14 (0.55)	104.5 (4.11)	–	160 (6.30)	**38 (1.50)**	M12	80 (3.15)	41 (1.61)	10 (0.39)

			Recessed flange						Flange compatible with 1FT6/1FK7				
					without brake		with brake			without brake		with brake	
Shaft height	Type	IEC	F_2	I_2	LB	O_1	LB	O_1	I_2	LB	O_1	LB	O_1
36	1FT7034		5.5 (0.22)	36.5 (1.44)	189 (7.44)	127 (5.00)	216 (8.50)	154 (6.06)	30 (1.18)	196 (7.72)	133 (5.24)	223 (8.78)	160 (6.30)
	1FT7036				237 (9.33)	175 (6.89)	264 (10.39)	202 (7.95)		244 (9.61)	181 (7.13)	271 (10.67)	208 (8.19)
48	1FT7042		5.5 (0.22)	46 (1.81)	158 (6.22)	96 (3.78)	190 (7.48)	128 (5.04)	40 (1.57)	164 (6.46)	102 (4.02)	196 (7.72)	134 (5.28)
	1FT7044				208 (8.19)	146 (5.75)	240 (9.45)	178 (7.01)		214 (8.43)	152 (5.98)	246 (9.69)	184 (7.24)
	1FT7046				248 (9.76)	186 (7.32)	280 (11.02)	218 (8.58)		254 (10.00)	192 (7.56)	286 (11.26)	224 (8.82)
63	1FT7062		6 (0.24)	56.5 (2.22)	161 (6.34)	99 (3.90)	197 (7.76)	135 (5.31)	50 (1.97)	168 (6.61)	106 (4.17)	203 (7.99)	141 (5.55)
	1FT7064				193 (7.60)	131 (5.16)	228 (8.98)	166 (6.54)		200 (7.87)	137 (5.39)	235 (9.25)	173 (6.81)
	1FT7066				225 (8.86)	162 (6.38)	260 (10.24)	198 (7.80)		231 (9.09)	169 (6.65)	267 (10.51)	204 (8.03)
	1FT7068				272 (10.71)	210 (8.27)	307 (12.09)	245 (9.65)		279 (10.98)	216 (8.50)	314 (12.36)	252 (9.92)
80	1FT7082		6 (0.24)	64.5 (2.54)	189 (7.44)	124 (4.88)	236 (9.29)	176 (6.93)	58 (2.28)	191 (7.52)	130 (5.12)	243 (9.57)	183 (7.20)
	1FT7084				236 (9.29)	175 (6.89)	288 (11.34)	228 (8.98)		242 (9.53)	182 (7.17)	294 (11.57)	234 (9.21)
	1FT7086				287 (11.30)	227 (8.94)	340 (13.39)	279 (10.98)		294 (11.57)	234 (9.21)	346 (13.62)	286 (11.26)
100	1FT7102		6.5 (0.26)	87 (3.43)	209 (8.23)	144 (5.67)	261 (10.28)	196 (7.72)	80 (3.15)	216 (8.50)	151 (5.94)	268 (10.55)	203 (7.99)
	1FT7105				296 (11.65)	231 (9.09)	348 (13.70)	283 (11.14)		303 (11.93)	238 (9.37)	355 (13.98)	290 (11.42)
	1FT7108				365 (14.37)	300 (11.81)	417 (16.42)	352 (13.86)		372 (14.65)	307 (12.09)	424 (16.69)	359 (14.13)

© Siemens 2022

Dimensional drawings

Version with connector

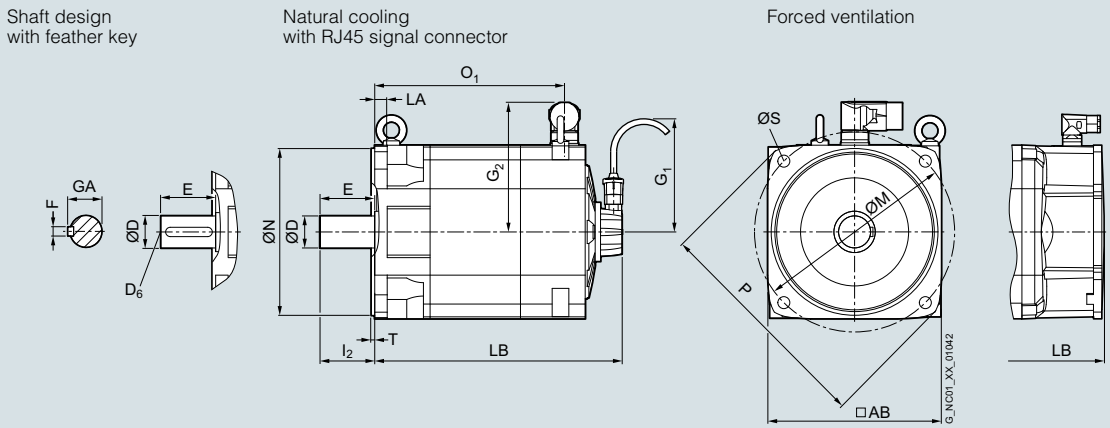

Version with terminal box

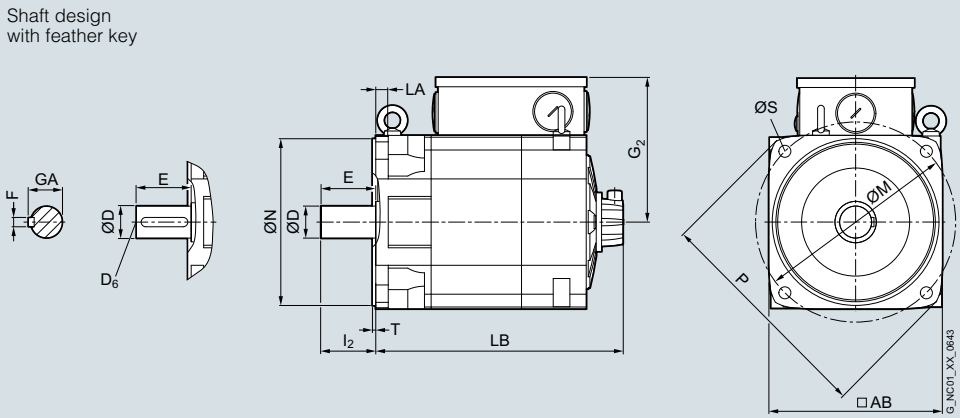

For motor		Dimensions in mm (inches)																	
											Connector size		Terminal box	Shaft extension DE				
											Size 1.5	Size 3						
Shaft height	Type	IEC	P	N	LA	M	AB	T	l_2	S	G_1	G_2	G_2	**D**	D_6	E	GA	F
SIMOTICS S-1FT7 natural cooling and forced ventilation, with connector/with terminal box, without/with brake																		
132	1FT713.-5(A/S)		340 (13.39)	250 (9.84)	18 (0.71)	300 (11.81)	260 (10.24)	5 (0.20)	82 (3.23)	18 (0.71)	193.5 (7.62)	203 (7.99)	215.5 (8.48)	**48** **(1.89)**	M16	82 (3.23)	51.5 (2.03)	14 (0.55)

			Natural cooling							Forced ventilation		Natural cooling and forced ventilation			
			without brake		with brake		G			without brake	with brake	without brake		with brake	
			Signal connector									Connector size			
			RJ45	M17 M23	RJ45	M17 M23	RJ45	M17	M23			Size 1.5	Size 3	Size 1.5	Size 3
Shaft height	Type	IEC	LB	LB	LB	LB	G_1	G_1	G_1	LB	LB	O_1	O_1	O_1	O_1
132	1FT7132-5(A/S)		370.5 (14.59)	375.5 (14.78)	431 (16.97)	436 (17.97)	104.5 (4.11)	82 (3.23)	93 (3.65)	483.6 (19.04)	544.1 (21.42)	284.5 (11.20)	265.5 (10.45)	345 (13.58)	326 (12.83)
	1FT7134-5(A/S)		415.5 (16.36)	420.5 (16.56)	476 (18.74)	481 (18.94)				528.6 (20.81)	589.1 (23.19)	329.5 (12.97)	310.5 (12.22)	390 (15.35)	371 (14.61)
	1FT7136-5(A/S)		460.5 (18.13)	465.5 (18.53)	521 (20.51)	526 (20.71)				573.6 (22.58)	634.1 (24.96)	374.5 (14.74)	355.5 (14.00)	435 (17.13)	416 (16.38)
	1FT7138-5(A/S)		500.5 (19.70)	505.5 (19.90)	561 (22.09)	566 (22.28)				613.6 (24.16)	674.1 (26.54)	414.5 (16.32)	395.5 (15.57)	475 (18.70)	456 (17.95)

© Siemens 2022

Dimensional drawings

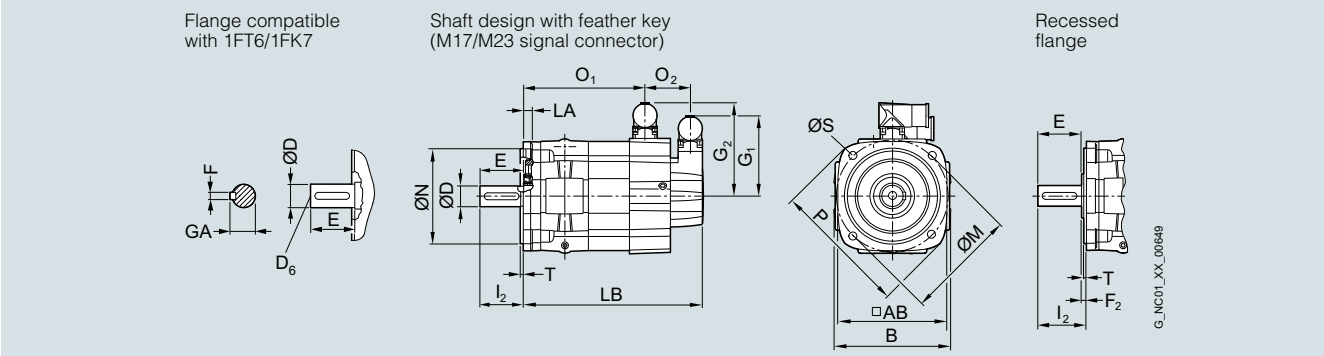

For motor		Dimensions in mm (inches)																
											Signal connector		Power connector			Connector		
											M17	M23	Size 1	Size 1.5	Size 3	Size 1	Size 1.5	Size 3
Shaft height	Type	IEC	P	B	N	LA	M	AB	T	S			G_2	G_2	G_2	O_2	O_2	O_2
SIMOTICS S-1FT7 water cooling, with connector, without/with brake																		
63	1FT706.-.W		155 (6.10)	135 (5.31)	110 (4.33)	10 (0.39)	130 (5.12)	126 (4.96)	3.5 (0.14)	9 (0.35)	82 (3.23)	93 (3.66)	108 (4.25)	132.5 (5.22)	–	52 (2.05)	57 (2.24)	–
80	1FT708.-.W		194 (7.68)	165 (6.50)	130 (5.12)	11.5 (0.45)	165 (6.50)	155 (6.10)	3.5 (0.14)	11 (0.43)	82 (3.23)	93 (3.66)	–	140.5 (5.53)	168.5 (6.63)	–	50 (1.97)	67 (2.64)
100	1FT710.-5W		245 (9.65)	206 (8.11)	180 (7.09)	13 (0.51)	215 (8.46)	196 (7.72)	4 (0.16)	14 (0.55)	82 (3.23)	93 (3.66)	–	159.5 (6.28)	187.5 (7.38)	–	55 (2.17)	72 (2.83)

			Flange compatible with 1FT6/1FK7 without/with brake					Recessed flange without/with brake						Shaft extension DE				
					Power connector						Power connector							
					Size 1	Size 1.5	Size 3				Size 1	Size 1.5	Size 3					
Shaft height	Type	IEC	l_2	LB	O_1	O_1	O_1	F_2	l_2	LB	O_1	O_1	O_1	D	D_6	E	GA	F
63	1FT7062		50 (1.97)	208 (8.19)	141 (5.55)	–	–	6 (0.24)	56.5 (2.22)	202 (7.95)	135 (5.31)	–	–	**24 (0.94)**	M8	50 (1.97)	27 (1.06)	8 (0.31)
	1FT7064			240 (9.45)	173 (6.81)	–	–			233 (9.17)	166 (6.54)	–	–					
	1FT7065			292 (11.50)	220 (8.66)	–	–			286 (11.26)	214 (8.43)	–	–					
	1FT7066			272 (10.71)	204 (8.03)	–	–			265 (10.43)	198 (7.80)	–	–					
	1FT7067			332 (13.07)	260 (10.24)	–	–			325 (12.80)	254 (10.00)	–	–					
	1FT7068			319 (12.56)	252 (9.92)	–	–			312 (12.28)	245 (9.65)	–	–					
80	1FT7082		58 (2.28)	248 (9.76)	–	183 (7.20)	–	6 (0.24)	64.5 (2.54)	241 (9.49)	–	176 (6.93)	–	**32 (1.26)**	M12	58 (2.28)	35 (1.38)	10 (0.39)
	1FT7084			299 (11.77)	–	234 (9.21)	–			293 (11.54)	–	228 (8.98)	–					
	1FT7085			319 (12.56)	–	254 (10.00)	237 (9.33)			312.5 (12.30)	–	247 (9.72)	231 (9.09)					
	1FT7086			351 (13.82)	–	286 (11.26)	–			345 (13.58)	–	279 (10.98)	–					
	1FT7087			379 (14.92)	–	314 (12.36)	297 (11.69)			372.5 (14.67)	–	307 (12.09)	291 (11.46)					
100	1FT7102		80 (3.15)	273 (10.75)	–	203 (7.99)	187 (7.36)	6.5 (0.26)	87 (3.43)	266 (10.47)	–	196 (7.72)	180 (7.09)	**38 (1.50)**	M12	80 (3.15)	41 (1.61)	10 (0.39)
	1FT7105			360 (14.17)	–	290 (11.42)	273 (10.75)			353 (13.90)	–	283 (11.14)	266 (10.47)					
	1FT7108			429 (16.89)	–	359 (14.13)	342 (13.46)			422 (16.61)	–	352 (13.86)	335 (13.19)					

© Siemens 2022

SIMOTICS S-1FT7 with RJ45 signal connector (DRIVE-CLiQ) – Water cooling

Dimensional drawings

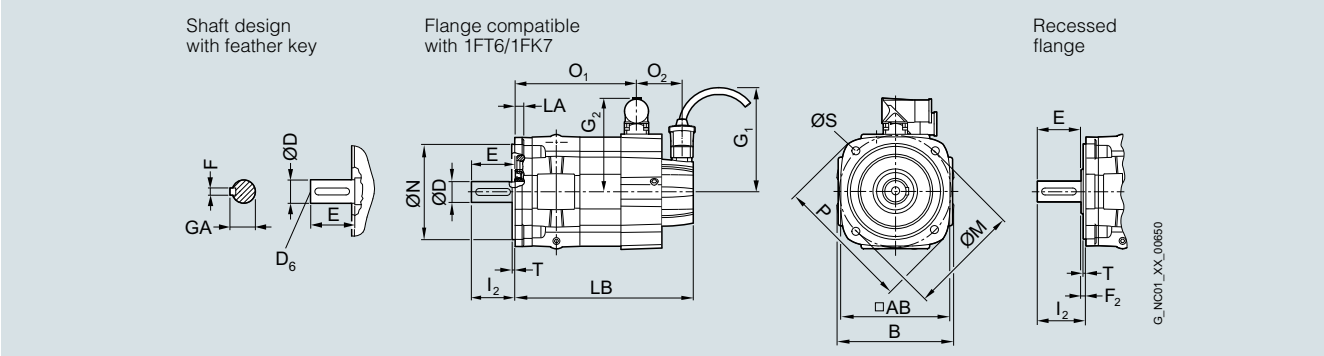

For motor		Dimensions in mm (inches)															
											Signal connector	Power connector			Connector		
												Size 1	Size 1.5	Size 3	Size 1	Size 1.5	Size 3
Shaft height	Type	IEC	P	B	N	LA	M	AB	T	S	G_1	G_2	G_2	G_2	O_2	O_2	O_2
SIMOTICS S-1FT7 water cooling, with connector, without/with brake																	
63	1FT706.-.W		155 (6.10)	135 (5.31)	110 (4.33)	10 (0.39)	130 (5.12)	126 (4.96)	3.5 (0.14)	9 (0.35)	104.5 (4.11)	108 (4.25)	132.5 (5.22)	–	50 (1.97)	55 (2.17)	–
80	1FT708.-.W		194 (7.68)	165 (6.50)	130 (5.12)	11.5 (0.45)	165 (6.50)	155 (6.10)	3.5 (0.14)	11 (0.43)	104.5 (4.11)	–	140.5 (5.53)	168.5 (6.63)	–	48 (1.89)	63 (2.48)
100	1FT710.-5W		245 (9.65)	206 (8.11)	180 (7.09)	13 (0.51)	215 (8.46)	196 (7.72)	4 (0.16)	14 (0.55)	104.5 (4.11)	–	159.5 (6.28)	187.5 (7.38)	–	53 (2.09)	69 (2.72)

			Flange compatible with 1FT6/1FK7					Recessed flange						Shaft extension DE				
				without/with brake						without/with brake								
					Power connector						Power connector							
					Size 1	Size 1.5	Size 3				Size 1	Size 1.5	Size 3					
Shaft height	Type	IEC	I_2	LB	O_1	O_1	O_1	F_2	I_2	LB	O_1	O_1	O_1	D	D_6	E	GA	F
63	1FT7062		50 (1.97)	204 (8.03)	141 (5.55)	–	–	6 (0.24)	56.5 (2.22)	197 (7.76)	135 (5.31)	–	–	**24 (0.94)**	M8	50 (1.97)	27 (1.06)	8 (0.31)
	1FT7064			235 (9.25)	173 (6.81)	–	–			229 (9.02)	166 (6.54)	–	–					
	1FT7065			287 (11.30)	220 (8.66)	–	–			281 (11.06)	214 (8.43)	–	–					
	1FT7066			267 (10.51)	204 (8.03)	–	–			260 (10.24)	198 (7.80)	–	–					
	1FT7067			327 (12.87)	260 (10.24)	–	–			321 (12.64)	254 (10.00)	–	–					
	1FT7068			314 (12.36)	252 (9.92)	–	–			308 (12.13)	245 (9.65)	–	–					
80	1FT7082		58 (2.28)	243 (9.57)	–	183 (7.20)	–	6 (0.24)	64.5 (2.54)	237 (9.33)	–	176 (6.93)	–	**32 (1.26)**	M12	58 (2.28)	35 (1.38)	10 (0.39)
	1FT7084			295 (11.61)	–	234 (9.21)	–			288 (11.34)	–	228 (8.98)	–					
	1FT7085			314 (12.36)	–	254 (10.00)	237 (9.33)			308 (12.13)	–	247 (9.72)	231 (9.09)					
	1FT7086			346 (13.62)	–	286 (11.26)	–			340 (13.39)	–	279 (10.98)	–					
	1FT7087			374 (14.72)	–	314 (12.36)	297 (11.69)			368 (14.49)	–	307 (12.09)	291 (11.46)					
100	1FT7102		80 (3.15)	267 (10.51)	–	203 (7.99)	187 (7.36)	6.5 (0.26)	87 (3.43)	262 (10.31)	–	196 (7.72)	180 (7.09)	**38 (1.50)**	M12	80 (3.15)	41 (1.61)	10 (0.39)
	1FT7105			355 (13.98)	–	290 (11.42)	273 (10.75)			348 (13.70)	–	283 (11.14)	266 (10.47)					
	1FT7108			424 (16.69)	–	359 (14.13)	342 (13.46)			417 (16.42)	–	352 (13.86)	335 (13.19)					

© Siemens 2022

SIMOTICS S-1FT7 with RJ45 (DRIVE-CLiQ) and M23 signal connector – Forced ventilation

Dimensional drawings

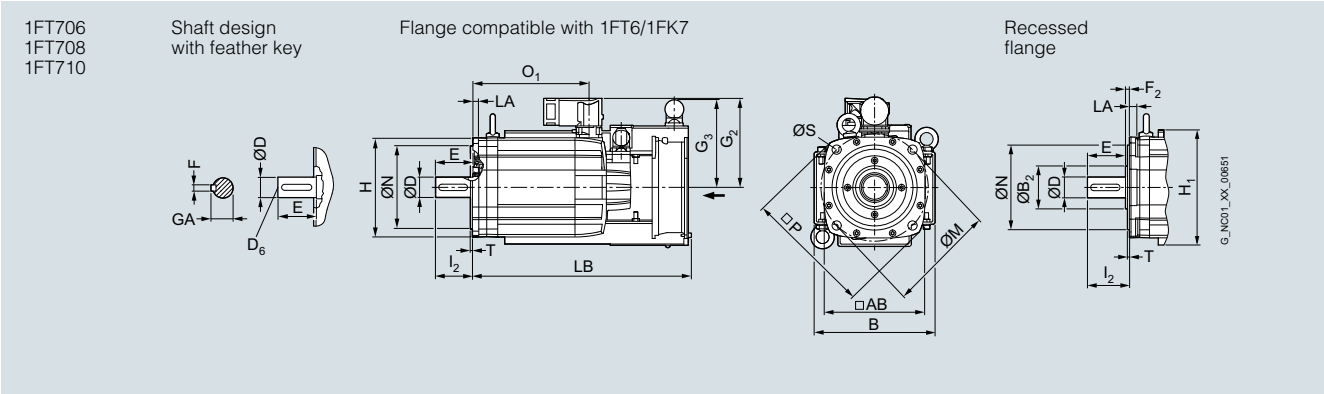

For motor		Dimensions in mm (inches)														
											Connector size					Fan
											Size 1.5	Size 3				
Shaft height	Type	IEC	P	B	N	LA	M	AB	T	S	G_2	G_2	G_3	H	H_1	H_2
SIMOTICS S-1FT7 forced ventilation, with connector, without/with brake																
63	1FT706.-.S		155 (6.10)	158 (6.22)	110 (4.33)	10 (0.39)	130 (5.12)	126 (4.96)	3.5 (0.14)	11 (0.43)	125 (4.92)	–	102 (4.02)	26 (1.02)	143 (5.36)	135 (5.31)
80	1FT708.-.S		194 (7.68)	186 (7.32)	130 (5.12)	11.5 (0.45)	165 (6.50)	155 (6.10)	3.5 (0.14)	11 (0.43)	139 (5.47)	167 (6.57)	137.5 (5.41)	27 (1.06)	177 (6.97)	186.5 (7.34)
100	1FT710.-5S		245 (9.65)	224 (8.82)	180 (7.09)	13 (0.51)	215 (8.46)	196 (7.72)	4 (0.16)	14 (0.55)	159 (6.26)	187 (7.36)	151 (5.94)	27 (1.06)	220 (8.66)	222 (8.74)

			Flange compatible with 1FT6/1FK7					Recessed flange						Shaft extension DE				
				without brake		with brake				without brake		with brake						
Shaft height	Type	IEC	I_2	LB	O_1	LB	O_1	F_2	I_2	LB	O_1	LB	O_1	D	D_6	E	GA	F
63	1FT7065-7S		50 (1.97)	380 (14.96)	220 (8.66)	380 (14.96)	220 (8.66)	6 (0.24)	56.5 (2.22)	373.5 (14.70)	214 (8.43)	373.5 (14.70)	214 (8.43)	**24 (0.94)**	M8	50 (1.97)	27 (1.06)	8 (0.31)
	1FT7067-7S			420 (16.54)	260 (10.24)	420 (16.54)	260 (10.24)			413.5 (16.28)	254 (10.00)	413.5 (16.28)	254 (10.00)					
80	1FT7084-5S		58 (2.28)	342 (13.46)	182 (7.17)	394 (15.51)	234 (9.21)	6 (0.24)	64.5 (2.54)	336 (13.23)	175 (6.89)	387 (15.24)	228 (8.98)	**32 (1.26)**	M12	58 (2.28)	35 (1.38)	10 (0.39)
	1FT7085-7S			414 (16.30)	254 (10.00)	414 (16.30)	254 (10.00)			408 (16.06)	247 (9.72)	408 (16.06)	247 (9.72)					
	1FT7086-5S			394 (15.51)	234 (9.21)	446 (17.56)	286 (11.26)			387 (15.24)	227 (8.94)	440 (17.32)	379 (14.92)					
	1FT7087-7S			474 (18.66)	314 (12.36)	474 (18.66)	314 (12.36)			468 (18.43)	307 (12.09)	468 (18.43)	307 (12.09)					
100	1FT7105		80 (3.15)	404 (15.91)	238 (9.37)	456 (17.95)	290 (11.42)	6.5 (0.26)	87 (3.43)	397 (15.63)	231 (9.09)	449 (17.68)	283 (11.14)	**38 (1.50)**	M12	80 (3.15)	41 (1.61)	10 (0.39)
	1FT7108			473 (18.62)	307 (12.09)	525 (20.67)	359 (14.13)			466 (18.35)	300 (11.81)	518 (20.39)	352 (13.86)					

© Siemens 2022

Dimensional drawings

1FK701
1FK702

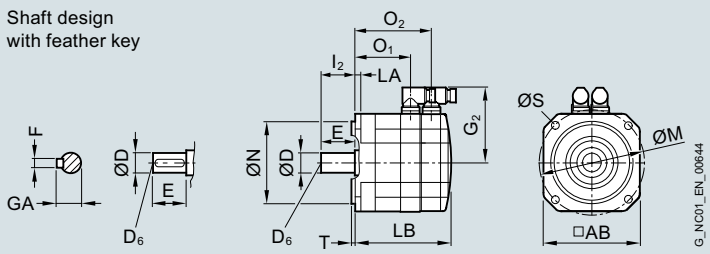

For motor		Dimensions in mm (inches)													
											Shaft extension DE				
Shaft height	Type	IEC	N	LA	M	AB	T	G_2	l_2	S	**D**	D_6	E	GA	F
SIMOTICS S-1FK7 natural cooling, without/with brake															
20	1FK701		30 (1.18)	7 (0.28)	46 (1.81)	40 (1.57)	2.5 (0.10)	66 (2.60)	18 (0.71)	4.5 (0.18)	**8** (0.31)	–	18 (0.71)	8.8 (0.35)	2 (0.08)
28	1FK702		40 (1.57)	10 (0.39)	63 (2.48)	55 (2.17)	2.5 (0.10)	75 (2.95)	20 (0.79)	5.4 (0.21)	**9** **(0.35)**	M3	20 (0.79)	10.2 (0.40)	3 (0.12)

		Encoder system: Resolver Absolute encoders AM16S/R / AM15DQ						Encoder system: Incremental encodersIC2048S/R / IC22DQ Absolute encodersAM2048S/R AM512S/R / AM20DQ AM32S/R / AM16DQ					
For motor		Dimensions in mm (inches)											
		without brake			with brake			without brake			with brake		
Shaft height	Type	LB	O_1	O_2	LB	O_1	O_2	LB	O_1	O_2	LB	O_1	O_2
20	1FK7011	140 (5.51)	89 (3.50)	118 (4.65)	140 (5.51)	89 (3.50)	118 (4.65)	155 (6.10)	89 (3.50)	118 (4.65)	155 (6.10)	89 (3.50)	118 (4.65)
	1FK7015	165 (6.50)	114 (4.59)	143 (5.63)	165 (6.50)	114 (4.49)	143 (5.63)	180 (7.09)	114 (4.49)	143 (5.63)	180 (7.09)	114 (4.49)	143 (5.63)
28	1FK7022	153 (6.02)	95 (3.74)	128 (5.04)	175 (6.89)	95 (3.74)	150 (5.91)	178 (7.01)	95 (3.74)	128 (5.04)	200 (7.87)	95 (3.74)	150 (5.91)

© Siemens 2022

Dimensional drawings

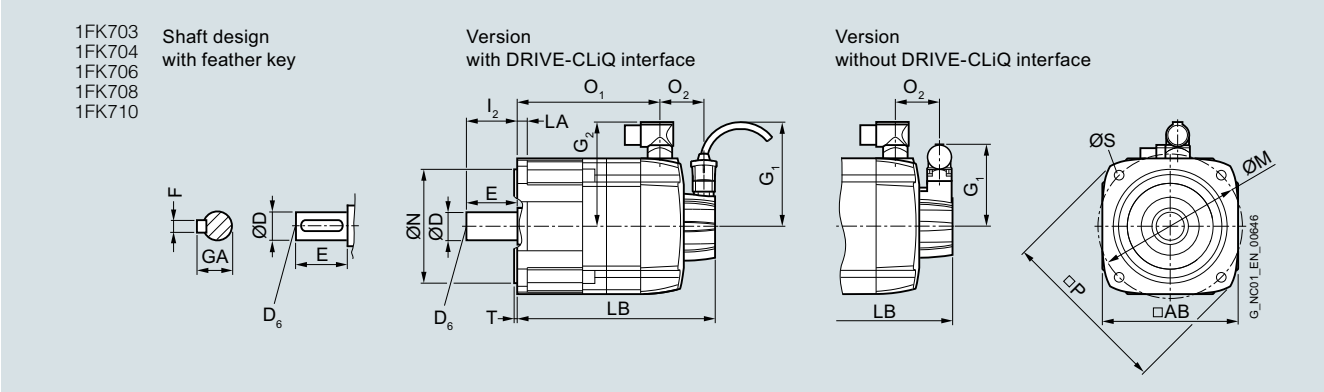

For motor		DQI encoder with DRIVE-CLiQ interface (without resolver)/ Encoder system without DRIVE-CLiQ interface (without resolver) Dimensions in mm (inches)													
											Shaft extension DE				
Shaft height	Type	IEC	P	N	LA	M	AB	T	l_2	S	**D**	D_6	E	GA	F
SIMOTICS S-1FK7 Compact/High Dynamic, without/with brake – Dimensions dependent on shaft height															
36	1FK703		90 (3.54)	60 (2.36)	8 (0.31)	75 (2.95)	72 (2.83)	3 (0.12)	30 (1.18)	6.5 (0.26)	**14** (0.55)	M5	30 (1.18)	16 (0.63)	5 (0.20)
SIMOTICS S-1FK7 Compact/High Dynamic/High Inertia, without/with brake – Dimensions dependent on shaft height															
48	1FK704		120 (4.72)	80 (3.15)	10 (0.39)	100 (3.94)	96 (3.78)	3 (0.12)	40 (1.57)	6.5 (0.26)	**19** (0.75)	M6	40 (1.57)	21.5 (0.85)	6 (0.24)
63	1FK706		155 (6.10)	110 (4.33)	10 (0.39)	130 (5.12)	126 (4.96)	3.5 (0.14)	50 (1.97)	9 (0.35)	**24** (0.94)	M8	50 (1.97)	27 (1.06)	8 (0.31)
80	1FK708		194 (7.64)	130 (5.12)	11.5 (0.45)	165 (6.50)	155 (6.10)	3.5 (0.14)	58 (2.28)	11 (0.43)	**32** (1.26)	M12	58 (2.28)	35 (1.38)	10 (0.39)
SIMOTICS S-1FK7 Compact/High Inertia, without/with brake – Dimensions dependent on shaft height															
100	1FK710		245 (9.65)	180 (7.09)	13 (0.51)	215 (8.46)	192 (7.56)	4 (0.16)	80 (3.15)	14 (0.55)	**38** (1.50)	M12	80 (3.15)	41 (1.61)	10 (0.39)

For motor		DQI encoder with DRIVE-CLiQ interface (without resolver) Dimensions in mm (inches)							Encoder system without DRIVE-CLiQ interface (without resolver)						
					without brake		with brake					without brake		with brake	
Shaft height	Type	G_1	G_2	O_2	LB	O_1	LB	O_1	G_1	G_2	O_2	LB	O_1	LB	O_1
SIMOTICS S-1FK7 High Inertia – Dimensions dependent on overall length															
48	1FK7042-3B	104.5 (4.11)	90 (3.54)	50 (1.97)	187 (7.36)	125 (4.92)	219 (8.62)	157 (6.18)	93 (3.66)	90 (3.54)	52 (2.05)	192 (7.56)	125 (4.92)	224 (8.82)	157 (6.18)
63	1FK7060-3B	104.5 (4.11)	104 (4.09)	50 (1.97)	182 (7.17)	120 (4.72)	217 (8.54)	155 (6.10)1	93 (3.66)	104 (4.09)	52 (2.05)	187 (7.36)	120 (4.72)	222 (8.74)	155 (6.10)
	1FK7062-3B				216 (8.50)	153 (6.02)	251 (9.88)	189 (7.44)				221 (8.70)	153 (6.02)	256 (10.08)	189 (7.44)
80	1FK7081-3B	104.5 (4.11)	119 (4.69)	48 (1.89)	211 (8.31)	151 (5.94)	264 (10.39)	203 (7.99)	93 (3.66)	119 (4.69)	50 (1.97)	216 (8.50)	151 (5.94)	269 (10.59)	203 (7.99)
	1FK7084-3B				270 (10.63)	209 (8.23)	322 (12.68)	262 (10.31)				275 (10.83)	209 (8.23)	327 (12.87)	262 (10.31)
100	1FK7100-3B	104.5 (4.11)	137 (5.39)	53 (2.09)	183 (7.20)	118 (4.65)	220 (8.66)	170 (6.69)	93 (3.66)	137 (5.39)	55 (2.17)	188 (7.40)	118 (4.65)	225 (8.86)	170 (6.69)
	1FK7101-3B		158 (6.22)		209 (8.23)	144 (5.67)	261 (10.28)	196 (7.72)		158 (6.22)		214 (8.43)	144 (5.67)	266 (10.47)	196 (7.72)
	1FK7103-3B				235 (9.25)	170 (6.69)	287 (11.30)	222 (8.74)				240 (9.45)	170 (6.69)	292 (11.50)	222 (8.74)
	1FK7105-3B				287 (11.30)	222 (8.74)	339 (13.35)	274 (10.79)				292 (11.50)	222 (8.74)	344 (13.54)	274 (10.79)

© Siemens 2022

Dimensional drawings

For motor		DQI encoder with DRIVE-CLiQ interface (without resolver) Dimensions in mm (inches)							Encoder system without DRIVE-CLiQ interface (without resolver)						
					without brake		with brake					without brake		with brake	
Shaft height	Type	G_1	G_2	O_2	LB	O_1	LB	O_1	G_1	G_2	O_2	LB	O_1	LB	O_1
SIMOTICS S-1FK7 Compact – Dimensions dependent on overall length															
36	1FK7032-2A	104.5 (4.11)	78 (3.07)	50 (1.97)	173 (6.81)	111 (4.37)	200 (7.87)	138 (5.43)	77 (3.03)	78 (3.07)	47 (1.85)	173 (6.81)	111 (4.37)	200 (7.87)	138 (5.43)
	1FK7034-2A				198 (7.80)	136 (5.35)	225 (8.86)	263 (6.42)				198 (7.80)	136 (5.35)	225 (8.86)	163 (6.42)
48	1FK7040-2A	104.5 (4.11)	90 (3.54)	50 (1.97)	147 (6.61)	85 (3.35)	179 (7.99)	117 (5.55)	93 (3.66)	90 (3.54)	52 (2.05)	152 (6.81)	85 (3.35)	184 (8.19)	117 (5.55)
	1FK7042-2A				174 (6.85)	112 (4.41)	206 (8.11)	144 (5.67)				179 (7.05)	112 (4.41)	211 (8.31)	144 (5.57)
63	1FK7060-2A	104.5 (4.11)	104 (4.09)	50 (1.97)	168 (6.61)	106 (4.17)	203 (7.99)	141 (5.55)	93 (3.66)	104 (4.09)	52 (2.05)	173 (6.81)	106 (4.17)	208 (8.19)	141 (5.55)
	1FK7062-2A				190 (7.48)	128 (5.04)	226 (8.90)	163 (6.42)				195 (7.68)	128 (5.04)	231 (9.09)	163 (6.42)
	1FK7063-2A				213 (8.39)	151 (5.94)	248 (9.76)	186 (7.32)				218 (8.58)	151 (5.94)	253 (9.96)	186 (7.32)
80	1FK7080-2A	104.5 (4.11)	119 (4.69)	48 (1.89)	171 (6.73)	111 (4.37)	223 (8.78)	163 (6.42)	93 (3.66)	119 (4.69)	50 (1.97)	176 (6.93)	111 (4.37)	228 (8.98)	163 (6.42)
	1FK7081-2A				190 (7.48)	130 (5.12)	242 (9.53)	182 (7.17)				196 (7.68)	130 (5.12)	247 (9.72)	182 (7.17)
	1FK7083-2A				209 (8.23)	149 (5.87)	261 (10.28)	201 (7.91)				214 (8.43)	149 (5.87)	266 (10.47)	201 (7.91)
	1FK7084-2A				229 (9.02)	168 (6.61)	281 (11.06)	221 (8.70)				234 (9.21)	168 (6.61)	286 (11.26)	221 (8.70)
100	1FK7100-2A	104.5 (4.11)	137 (5.39)	53 (2.09)	183 (7.20)	118 (4.65)	220 (8.66)	170 (6.69)	93 (3.66)	137 (5.39)	55 (2.17)	188 (7.40)	118 (4.65)	225 (8.86)	170 (6.69)
	1FK7101-2A		158 (6.22)		209 (8.23)	144 (5.67)	261 (10.28)	196 (7.72)		158 (6.22)		214 (8.43)	144 (5.67)	266 (10.47)	196 (7.72)
	1FK7103-2A				235 (9.25)	170 (6.69)	287 (11.30)	222 (8.74)				240 (9.45)	170 (6.69)	292 (11.50)	222 (8.74)
	1FK7105-2A				287 (11.30)	222 (8.74)	339 (13.35)	274 (10.79)				292 (11.50)	222 (8.74)	344 (13.54)	274 (10.79)
SIMOTICS S-1FK7 High Dynamic – Dimensions dependent on overall length															
36	1FK7033-4C	104.5 (4.11)	78 (3.07)	50 (1.97)	183 (7.20)	121 (4.76)	210 (8.27)	148 (5.83)	77 (3.03)	78 (3.07)	47 (1.85)	183 (7.20)	121 (4.76)	210 (8.27)	148 (5.83)
48	1FK7043-4C	104.5 (4.11)	90 (3.54)	56 (2.20)	200 (7.87)	132 (5.20)	232 (9.13)	164 (6.46)	93 (3.66)	90 (3.54)	58 (2.28)	205 (8.07)	132 (5.20)	237 (9.33)	164 (6.46)
	1FK7044-4C				225 (8.86)	157 (6.18)	257 (10.12)	189 (7.44)				230 (9.06)	157 (6.18)	262 (10.31)	189 (7.44)
63	1FK7061-4C	104.5 (4.11)	104 (4.09)	50 (1.97)	203 (7.99)	141 (5.55)	238 (9.37)	176 (6.93)	93 (3.66)	104 (4.09)	52 (2.05)	208 (8.19)	141 (5.55)	243 (9.57)	176 (6.93)
	1FK7064-4C				267 (10.51)	205 (8.07)	302 (11.89)	240 (9.45)				272 (10.71)	205 (8.07)	307 (12.09)	240 (9.45)
80	1FK708.-4CC	104.5 (4.11)	119 (4.69)	48 (1.89)	257 (10.12)	197 (7.76)	309 (12.17)	249 (9.80)	93 (3.66)	119 (4.69)	50 (1.97)	262 (10.31)	197 (7.76)	314 (12.36)	249 (9.80)
	1FK708.-4CF		139 (5.47)							139 (5.47)					

© Siemens 2022

Dimensional drawings

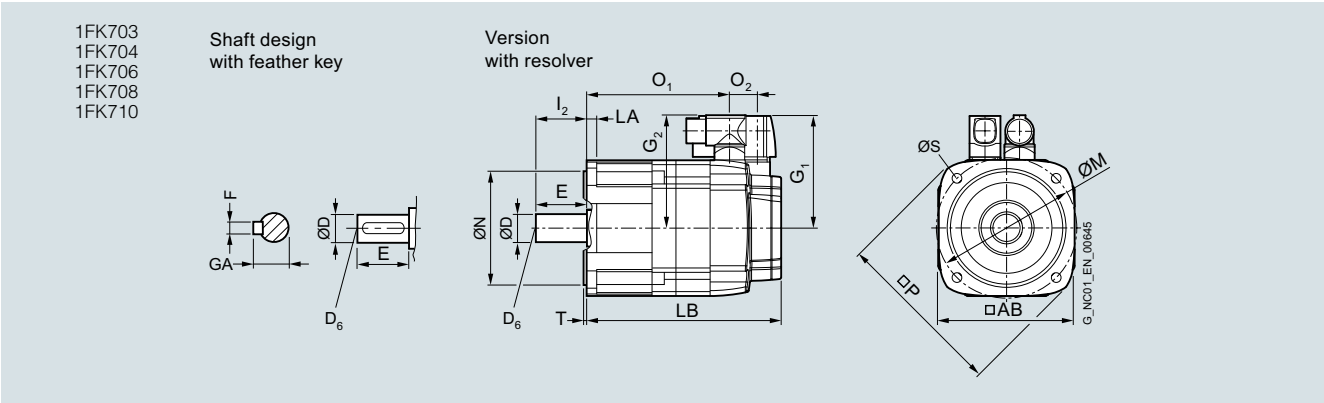

For motor		Resolver with/without DRIVE-CLiQ interface Dimensions in mm (inches)													
											Shaft extension DE				
Shaft height	Type	IEC	P	N	LA	M	AB	T	l_2	S	**D**	D_6	E	GA	F
SIMOTICS S-1FK7 Compact/High Dynamic, with/without brake – Dimensions dependent on shaft height															
36	1FK703		90 (3.54)	60 (2.36)	8 (0.31)	75 (2.95)	72 (2.83)	3 (0.12)	30 (1.18)	6.5 (0.26)	**14** (0.55)	M5	30 (1.18)	16 (0.63)	5 (0.20)
48	1FK704		120 (4.72)	80 (3.15)	10 (0.39)	100 (3.94)	96 (3.78)	3 (0.12)	40 (1.57)	6.5 (0.26)	**19** (0.75)	M6	40 (1.57)	21.5 (0.85)	6 (0.24)
63	1FK706		155 (6.10)	110 (4.33)	10 (0.39)	130 (5.12)	126 (4.96)	3.5 (0.14)	50 (1.97)	9 (0.35)	**24** (0.94)	M8	50 (1.97)	27 (1.06)	8 (0.31)
80	1FK708		194 (7.64)	130 (5.12)	11.5 (0.45)	165 (6.50)	155 (6.10)	3.5 (0.14)	58 (2.28)	11 (0.43)	**32** (1.26)	M12	58 (2.28)	35 (1.38)	10 (0.39)
SIMOTICS S-1FK7 Compact, without/with brake – Dimensions dependent on shaft height															
100	1FK710		245 (9.65)	180 (7.09)	13 (0.51)	215 (8.46)	192 (7.56)	4 (0.16)	80 (3.15)	14 (0.55)	**38** (1.50)	M12	80 (3.15)	41 (1.61)	10 (0.39)

© Siemens 2022

Dimensional drawings

For motor		Resolver with/without DRIVE-CLiQ interface Dimensions in mm (inches)						
					without brake		with brake	
Shaft height	Type	G_1	G_2	O_2	LB	O_1	LB	O_1
SIMOTICS S-1FK7 Compact – Dimensions dependent on overall length								
36	1FK7032-2A	80 (3.15)	80 (3.15)	15 (0.59)	153 (6.02)	117 (4.61)	180 (7.09)	144 (5.67)
	1FK7034-2A				178 (7.01)	142 (5.59)	205 (8.07)	169 (6.65)
48	1FK7040-2A	90 (3.54)	90 (3.54)	23 (0.91)	132 (5.20)	85 (3.35)	164 (6.46)	117 (4.61)
	1FK7042-2A				160 (6.30)	112 (4.41)	192 (7.56)	144 (5.67)
63	1FK7060-2A	103 (4.06)	104 (4.09)	23 (0.91)	153 (6.02)	106 (4.17)	189 (7.44)	141 (5.55)
	1FK7062-2A				176 (6.93)	128 (5.04)	211 (8.31)	163 (6.42)
	1FK7063-2A				198 (7.80)	151 (5.94)	234 (9.21)	186 (7.32)
80	1FK7080-2A	118 (4.65)	119 (4.69)	21 (0.83)	157 (6.18)	111 (4.37)	209 (8.23)	163 (6.42)
	1FK7081-2A				176 (6.93)	130 (5.12)	228 (8.98)	182 (7.17)
	1FK7083-2A				195 (7.68)	149 (5.87)	247 (9.72)	201 (7.91)
	1FK7084-2A				214 (8.43)	168 (6.61)	266 (10.47)	221 (8.70)
100	1FK7100-2A	136 (5.35)	137 (5.39)	26 (1.02)	169 (6.65)	118 (4.65)	206 (8.11)	155 (6.10)
	1FK7101-2A		158 (6.22)		195 (7.68)	144 (5.67)	247 (9.72)	196 (7.72)
	1FK7103-2A				221 (8.70)	170 (6.69)	273 (10.75)	222 (8.74)
	1FK7105-2A				273 (10.75)	222 (8.74)	325 (12.80)	274 (10.79)
SIMOTICS S-1FK7 High Dynamic – Dimensions dependent on overall length								
36	1FK7033-4C	81 (3.19)	80 (3.15)	15 (0.59)	163 (6.42)	127 (5.00)	190 (7.48)	154 (6.06)
48	1FK7043-4C	90 (3.54)	90 (3.54)	23 (0.91)	186 (7.32)	138 (5.43)	218 (8.58)	170 (6.69)
	1FK7044-4C				211 (8.31)	163 (6.42)	243 (9.57)	195 (7.68)
63	1FK7061-4C	103 (4.06)	104 (4.09)	23 (0.91)	188 (7.40)	141 (5.55)	224 (8.82)	176 (6.93)
	1FK7064-4C				252 (9.92)	205 (8.07)	288 (11.34)	240 (9.45)
80	1FK708.-4CC	118 (4.65)	119 (4.69)	21 (0.83)	243 (9.57)	197 (7.76)	295 (11.61)	250 (9.84)
	1FK708.-4CF		139 (5.47)					

© Siemens 2022

Dimensional drawings

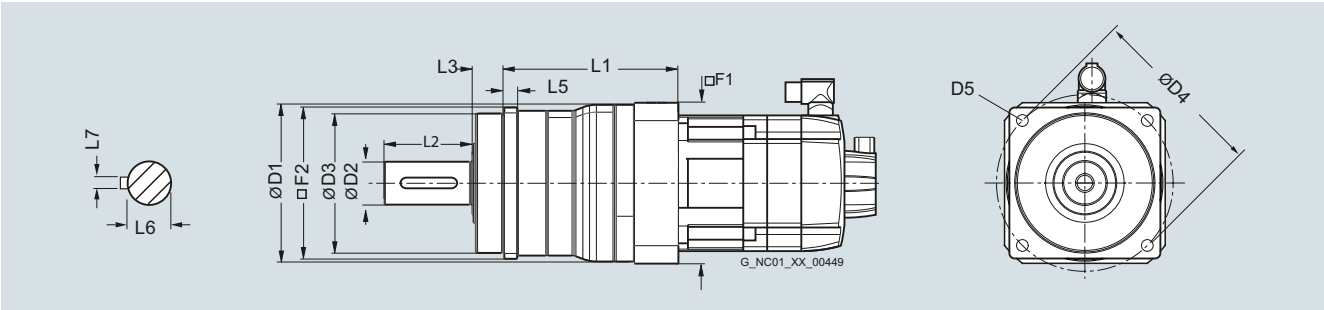

For SP+ series planetary gearboxes on SIMOTICS S-1FT7/S-1FK7 motors

Dimensions in mm (inches)

Planetary gearbox Type	D2	D3	D4	D5	F2	L2	L3	L5	L6	L7
SIMOTICS S-1FT7/1FK7 with SP+ series planetary gearbox single-stage/two-stage										
SP060S-MF1/-MF2	16 (0.63)	60 (2.36)	68 (2.68)	5.5 (0.22)	62 (2.48)	28 (1.10)	20 (0.79)	6 (0.24)	18 (0.71)	5 (0.20)
SP075S-MF1/-MF2	22 (0.87)	70 (2.76)	85 (3.35)	6.6 (0.26)	76 (2.99)	36 (1.42)	20 (0.79)	7 (0.28)	24.5 (0.96)	6 (0.24)
SP100S-MF1/-MF2	32 (1.26)	90 (3.54)	120 (4.72)	9 (0.35)	101 (3.98)	58 (2.28)	30 (1.18)	10 (0.39)	35 (1.38)	10 (0.39)
SP140S-MF1/-MF2	40 (1.57)	130 (5.12)	165 (6.50)	11 (0.43)	141 (5.55)	82 (3.23)	30 (1.18)	12 (0.47)	43 (1.69)	12 (0.47)
SP180S-MF1/-MF2	55 (2.17)	160 (6.30)	215 (8.46)	13.5 (0.53)	182 (7.17)	82 (3.23)	30 (1.18)	15 (0.59)	59 (2.32)	16 (0.63)
SP210S-MF1/-MF2	75 (2.95)	180 (7.09)	250 (9.84)	17 (0.67)	215 (8.46)	105 (4.13)	38 (1.50)	17 (0.67)	79.5 (3.13)	20 (0.79)
SP240S-MF1/-MF2	85 (3.35)	200 (7.87)	290 (11.42)	17 (0.67)	245 (9.65)	130 (5.12)	40 (1.57)	20 (0.79)	90 (3.54)	22 (0.87)

© Siemens 2022

Dimensional drawings

For SP+ series planetary gearboxes on SIMOTICS S-1FT7/S-1FK7 motors

Dimensions in mm (inches)

Planetary gearbox Type	Motor Type	Planetary gearbox series SP+ 1-stage **-MF1** D1	F1	L1	Planetary gearbox series SP+ 2-stage **-MF2** D1	F1	L1
SIMOTICS S-1FT7/1FK7 with SP+ series planetary gearbox single-stage/two-stage							
SP060S-	1FK702	68 (2.68)	70 (2.76)	89.3 (3.52)	70 (2.76)	60 (2.36)	108 (4.25)
	1FT703/1FK703	68 (2.68)	70 (2.76)	94 (3.70)	68 (2.68)	70 (2.76)	116 (4.57)
	1FT704/1FK704	91 (3.58)	90 (3.54)	106 (4.17)	–	–	–
SP075S-	1FK702	91 (3.58)	90 (3.54)	107.8 (4.24)	95 (3.74)	70 (2.76)	119 (4.69)
	1FT703/1FK703	91 (3.58)	90 (3.54)	107.8 (4.24)	95 (3.74)	70 (2.76)	123.4 (4.86)
	1FT704/1FK704	91 (3.58)	90 (3.54)	111.5 (4.39)	91 (3.58)	90 (3.54)	135.6 (5.34)
SP100S-	1FK702	–	–	–	118 (4.65)	90 (3.54)	142.3 (5.60)
	1FT703/1FK703	–	–	–	118 (4.65)	90 (3.54)	142.3 (5.60)
	1FT704/1FK704	115 (4.53)	120 (4.72)	122 (4.80)	118 (4.65)	90 (3.54)	146 (5.75)
	1FT704/1FK706	115 (4.53)	120 (4.72)	129 (5.08)	115 (4.53)	120 (4.72)	164 (6.46)
SP140S-	1FT704/1FK704	–	–	–	152 (5.98)	120 (4.72)	186.3 (7.33)
	1FT706/1FK706	146 (5.75)	150 (5.91)	162.3 (6.39)	152 (5.98)	120 (4.72)	193.3 (7.61)
	1FT708/1FK708	146 (5.75)	150 (5.91)	171.3 (6.74)	146 (5.75)	150 (5.91)	220 (8.66)
	1FT710/1FK710	146 (5.75)	190 (7.48)	171.3 (6.74)	–	–	–
SP180S-	1FT706/1FK706	–	–	–	212 (8.35)	150 (5.91)	234 (9.21)
	1FT708/1FK708	207 (8.15)	210 (8.27)	198 (7.80)	212 (8.35)	150 (5.91)	242.9 (9.56)
	1FT710/1FK710	207 (8.15)	210 (8.27)	203.5 (8.01)	212 (8.35)	190 (7.48)	242.9 (9.56)
SP210S-	1FT708/1FK708	–	–	–	215 (8.46)	210 (8.27)	272 (10.71)
	1FT710/1FK710	215 (8.46)	190 (7.48)	242 (9.53)	215 (8.46)	210 (8.27)	272 (10.71)
	1FT713	215 (8.46)	260 (10.24)	242 (9.53)	–	–	–
SP240S-	1FT708/1FK708	–	–	–	245 (9.65)	210 (8.27)	297.5 (11.71)
	1FT710/1FK710	245 (9.65)	240 (9.45)	273 (10.75)	245 (9.65)	210 (8.27)	297.5 (11.71)
	1FT713	245 (9.65)	260 (10.24)	273 (10.75)	245 (9.65)	260 (10.24)	297.5 (11.71)

© Siemens 2022

Dimensional drawings

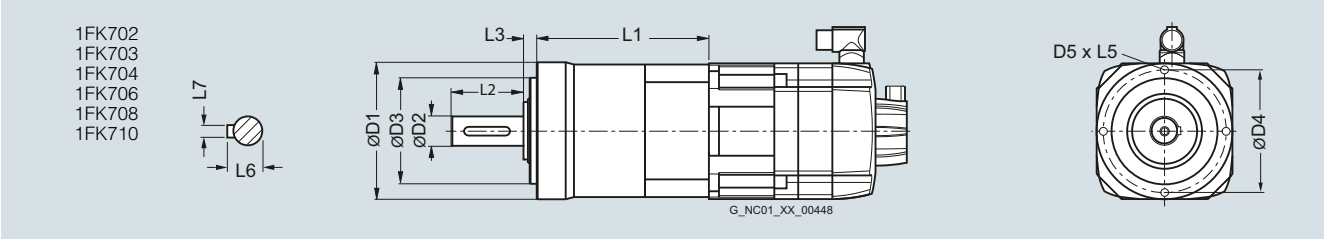

For planetary gearbox series NP on SIMOTICS S-1FK7 motors

Planetary gearbox	Motor	Dimensions in mm (inches)										
Type	Type	L1	L2	L3	L5	L6	L7	D1	D2	D3	D4	D5
SIMOTICS S-1FK7 with NP series planetary gearbox												
NP 005	1FK702	64 (2.52)	18 (0.71)	6.5 (0.26)	8 (0.31)	13.5 (0.53)	4 (0.16)	50 (1.97)	12 (0.47)	35 (1.38)	44 (1.73)	M4
NP 015	1FK702	82.5 (3.25)	28 (1.10)	8 (0.31)	10 (0.39)	18 (0.71)	5 (0.20)	70 (2.76)	16 (0.63)	52 (2.05)	62 (2.44)	M5
	1FK703	90 (3.54)										
NP 025	1FK704	112.5 (4.43)	36 (1.42)	10 (0.39)	12 (0.47)	24.5 (0.96)	6 (0.24)	90 (3.54)	22 (0.87)	68 (2.68)	80 (3.15)	M6
NP 035	1FK706	141 (5.55)	58 (2.28)	12 (0.47)	16 (0.63)	35 (1.38)	10 (0.39)	120 (4.72)	32 (1.26)	90 (3.54)	108 (4.25)	M8
NP 045	1FK708	167 (6.57)	82 (3.23)	15 (0.59)	20 (0.79)	43 (1.69)	12 (0.47)	155 (6.10)	40 (1.57)	120 (4.72)	140 (5.51)	M10
	1FK710	188.5 (7.42)										

© Siemens 2022

Dimensional drawings

1FK7032-2
1FK7040-2
1FK7060-2

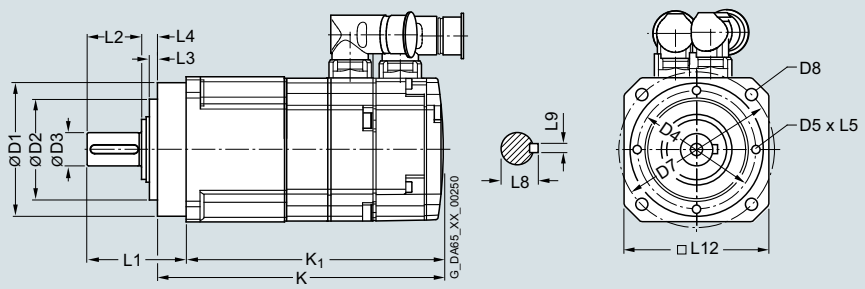

For motor		Dimensions in mm (inches)															
		Planetary gearbox															
Shaft height	Type	Type	D1	D2	D3	D4	D5	D7	D8	L1	L2	L3	L4	L5	L8	L9	L12
SIMOTICS S-1FK7-DYA G2 with planetary gearbox, single-stage, type of construction IM B5, natural cooling, with connector, with/without brake																	
36	1FK7032-2	DYA G2 NP015-10	70 (2.76)	52 (2.05)	16 (0.63)	62 (2.44)	M5	82 (3.23)	5.5 (0.22)	56 (2.20)	28 (1.10)	5 (0.20)	8 (0.31)	10 (0.39)	18 (0.71)	5 (0.20)	76 (2.99)
48	1FK7040-2	DYA G2 NP025-10	90 (3.54)	68 (2.68)	22 (0.87)	80 (3.15)	M6	105 (4.13)	7 (0.28)	66 (2.60)	36 (1.42)	5 (0.20)	10 (0.39)	12 (0.47)	24.5 (0.96)	6 (0.24)	101 (3.98)
63	1FK7060-2	DYA G2 NP035-10	120 (4.72)	90 (3.54)	32 (1.26)	108 (4.25)	M8	140 (5.51)	9 (0.35)	95 (3.74)	58 (2.28)	6 (0.24)	12 (0.47)	16 (0.63)	35 (1.38)	10 (0.39)	128 (5.04)

		Encoder system:							
		DQI encoder with DRIVE-CLiQ interface without resolver AM24DQI; AM20DQI AS24DQI; AS20DQI				Resolver with DRIVE-CLiQ interface [1] Resolver R15DQ Resolver R14DQ			
		without brake		with brake		without brake		with brake	
Shaft height	Type	K	K1	K	K1	K	K1	K	K1
36	1FK7032-2	219 (8.62)	199 (7.83)	246 (9.69)	226 (8.90)	199 (7.83)	179 (7.05)	226 (8.90)	206 (8.11)
48	1FK7040-2	203 (7.99)	182 (7.17)	235 (9.25)	214 (8.43)	–	–	–	–
63	1FK7060-2	241 (9.49)	216 (8.50)	275 (10.83)	250 (9.84)	–	–	–	–

[1] Can only be selected for 1FK7032-2AK71-1■■0-Z A03.

© Siemens 2022

Dimensional drawings

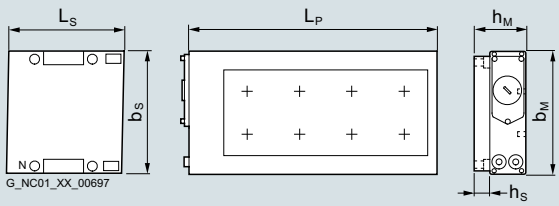

1FN3050 to 1FN3450 without precision cooling

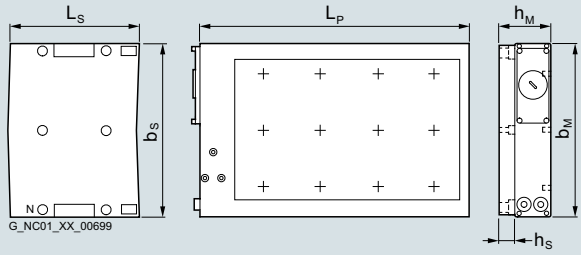

1FN3600 to 1FN3900 without precision cooling
Note: 4-row drill pattern with 1FN3900 for fixing the primary section

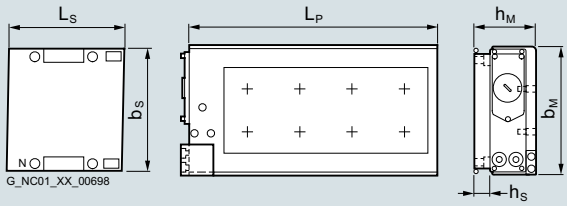

1FN3050 to 1FN3450 with precision cooling

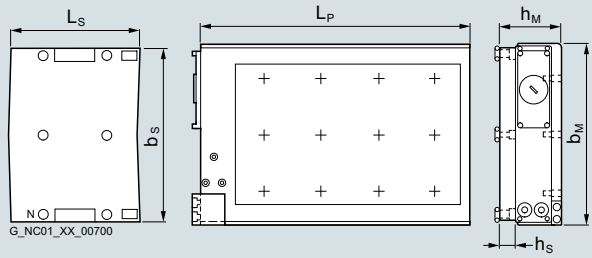

1FN3600 to 1FN3900 with precision cooling
Note: 4-row drill pattern with 1FN3900 for fixing the primary section

Primary section	Dimensions in mm (inches)					Secondary section	Dimensions in mm (inches)				
	Without precision cooling		With precision cooling		Primary section length		Without cover and without precision cooling		With cover and with precision cooling		Secondary section length
Type	b_M	h_M	b_M	h_M	L_P	Type	b_S	h_S	b_S	h_S	L_S
SIMOTICS L-1FN3 linear motors, version for peak load – Water cooling											
1FN3050-2W	67 (2.64)	48.5 (1.91)	76 (2.99)	63.4 (2.50)	255 (10.04)	1FN3050-4SA00-0AA0	58 (2.28)	11.8 (0.46)	75 (2.95)	14.8 (0.58)	120 (4.72)
1FN3100-1W	96 (3.78)	48.5 (1.91)	–	–	150 (5.91)	1FN3100-4SA00-0AA0	88 (3.46)	11.8 (0.46)	105 (4.13)	14.8 (0.58)	120 (4.72)
1FN3100-2W			105 (4.13)	63.4 (2.50)	255 (10.04)						
1FN3100-3W					360 (14.17)						
1FN3100-4W					465 (18.31)						
1FN3100-5W					570 (22.44)						
1FN3150-1W	126 (4.96)	50.5 (1.99)	–	–	150 (5.91)	1FN3150-4SA00-0AA0	118 (4.65)	13.8 (0.54)	135 (5.31)	16.8 (0.66)	120 (4.72)
1FN3150-2W			135 (5.31)	65.4 (2.57)	255 (10.04)						
1FN3150-3W					360 (14.17)						
1FN3150-4W					465 (18.31)						
1FN3150-5W					570 (22.44)						
1FN3300-1W	141 (5.55)	64.1 (2.52)	–	–	221 (8.70)	1FN3300-4SA00-0AA0	134 (5.28)	16.5 (0.65)	151 (5.94)	19.5 (0.77)	184 (7.24)
1FN3300-2W			150 (5.91)	79 (3.11)	382 (15.04)	1FN3300-4SA12-0AA0					276 (10.89)
1FN3300-3W					543 (21.38)						
1FN3300-4W					704 (27.72)						
1FN3450-2W	188 (7.40)	66.1 (2.60)	197 (7.76)	81 (3.19)	382 (15.04)	1FN3450-4SA00-0AA0	180 (7.09)	18.5 (0.73)	197 (7.76)	21.5 (0.85)	184 (7.24)
1FN3450-3W					543 (21.38)	1FN3450-4SA12-0AA0					276 (10.89)
1FN3450-4W					704 (27.72)						
1FN3600-2W	248 (9.76)	64.1 (2.52)	257 (10.12)	86 (3.39)	382 (15.04)	1FN3600-4SA00-0AA0	240 (9.45)	16.5 (0.65)	247 (9.72)	26.5 (1.04)	184 (7.24)
1FN3600-3W					543 (21.38)						
1FN3600-4W					704 (27.72)						
1FN3900-2W	342 (13.46)	66.1 (2.60)	351 (13.82)	88 (3.46)	382 (15.04)	1FN3900-4SA00-0AA0	334 (13.15)	18.5 (0.73)	341(13.43)	28.5 (1.12)	184 (7.24)
1FN3900-3W					543 (21.38)						
1FN3900-4W					704 (27.72)						

© Siemens 2022

Dimensional drawings

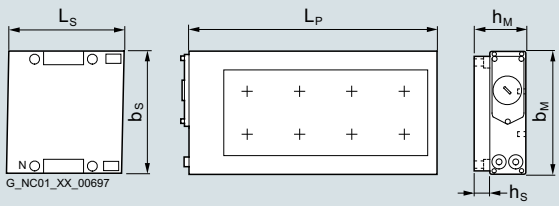

1FN3050 to 1FN3450 without precision cooling

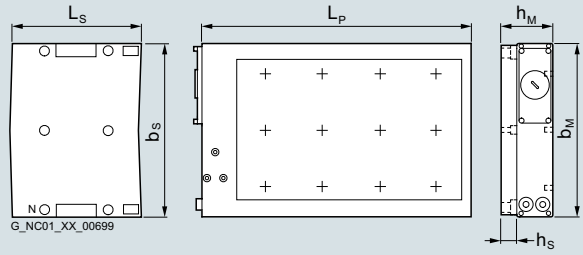

1FN3600 to 1FN3900 without precision cooling
Note: 4-row drill pattern with 1FN3900 for fixing the primary section

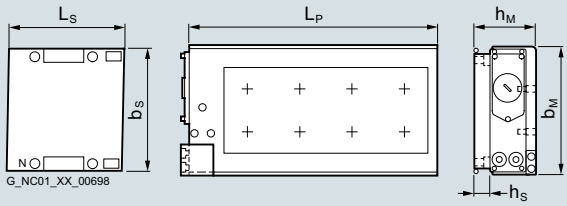

1FN3050 to 1FN3450 with precision cooling

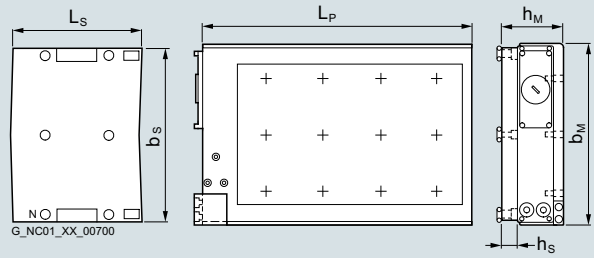

1FN3600 to 1FN3900 with precision cooling
Note: 4-row drill pattern with 1FN3900 for fixing the primary section

Primary section	Dimensions in mm (inches)					Secondary section	Dimensions in mm (inches)				
	Without precision cooling		With precision cooling		Primary section length		Without cover and without precision cooling		With cover and with precision cooling		Secondary section length
Type	b_M	h_M	b_M	h_M	L_P	Type	b_S	h_S	b_M	h_M	L_S
SIMOTICS L-1FN3 linear motors, version for continuous load – Water cooling											
1FN3050-1N	67 (2.64)	59.4 (2.34)	76 (2.99)	74.3 (2.93)	162 (6.38)	1FN3050-4SA00-0AA0	58 (2.28)	11.8 (0.46)	75 (2.95)	14.8 (0.58)	120 (4.72)
1FN3050-2N					267 (10.51)						
1FN3100-1N	96 (3.78)	59.4 (2.34)	105 (4.13)	74.3 (2.93)	162 (6.38)	1FN3100-4SA00-0AA0	88 (3.46)	11.8 (0.46)	105 (4.13)	14.8 (0.58)	120 (4.72)
1FN3100-2N					267 (10.51)						
1FN3100-3N					372 (14.65)						
1FN3100-4N					477 (18.78)						
1FN3150-1N	126 (4.96)	61.4 (2.42)	135 (5.31)	76.3 (3.00)	162 (6.38)	1FN3150-4SA00-0AA0	118 (4.65)	13.8 (0.54)	135 (5.31)	16.8 (0.66)	120 (4.72)
1FN3150-2N					267 (10.51)						
1FN3150-3N					372 (14.65)						
1FN3150-4N					477 (18.78)						
1FN3300-1N	141 (5.55)	78 (3.07)	150 (5.91)	92.9 (3.66)	238 (9.37)	1FN3300-4SA00-0AA0	134 (5.28)	16.5 (0.65)	151 (5.94)	19.5 (0.77)	184 (7.24)
1FN3300-2N					399 (15.71)	1FN3300-4SA12-0AA0					276 (10.89)
1FN3300-3N					560 (22.05)						
1FN3300-4N					721 (28.39)						
1FN3450-2N	188 (7.40)	80 (3.15)	197 (7.76)	94.9 (3.74)	399 (15.71)	1FN3450-4SA00-0AA0	180 (7.09)	18.5 (0.73)	197 (7.76)	21.5 (0.85)	184 (7.24)
1FN3450-3N					560 (22.05)	1FN3450-4SA12-0AA0					276 (10.89)
1FN3450-4N					721 (28.39)						
1FN3600-2N	248 (9.76)	78 (3.07)	257 (10.12)	99.9 (3.93)	399 (15.71)	1FN3600-4SA00-0AA0	240 (9.45)	16.5 (0.65)	247 (9.72)	26.5 (1.04)	184 (7.24)
1FN3600-3N					560 (22.05)						
1FN3600-4N					721 (28.39)						
1FN3900-2N	342 (13.46)	80 (3.15)	351 (13.82)	101.9 (4.01)	399 (15.71)	1FN3900-4SA00-0AA0	334 (13.15)	18.5 (0.73)	341 (13.43)	28.5 (1.12)	184 (7.24)
1FN3900-3N					560 (22.05)						
1FN3900-4N					721 (28.39)						

© Siemens 2022

Dimensional drawings

Water cooling
1FW6050
1FW6060

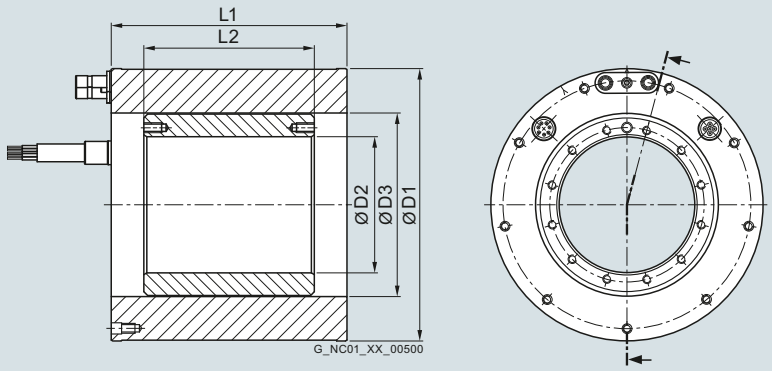

Natural cooling
1FW6053
1FW6063

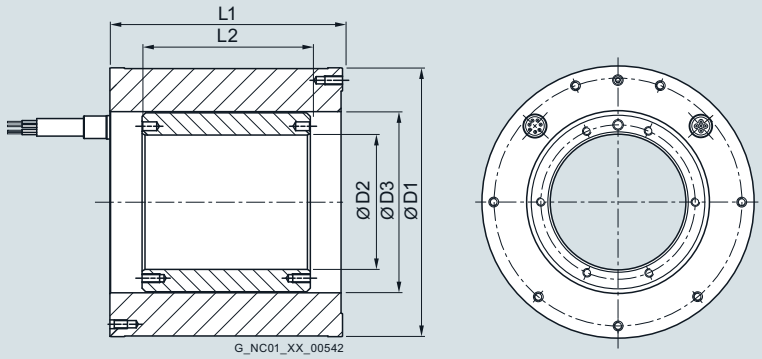

For motor	Dimensions in mm (inches)				
Type	D1	D2	D3	L1	L2
SIMOTICS T-1FW6 Standard built-in torque motors, water cooling or natural cooling					
1FW605.-0.B03	159 (6.26)	64 (2.52)	96 (3.78)	89 (3.50)	35 (1.38)
1FW605.-0.B05				109 (4.29)	65 (2.56)
1FW605.-0.B07				129 (5.08)	85 (3.35)
1FW605.-0.B10				159 (6.26)	115 (4.53)
1FW605.-0.B15				209 (8.23)	165 (6.50)
1FW606.-0.B03	184 (7.24)	92 (3.62)	124 (4.88)	89 (3.50)	35 (1.38)
1FW606.-0.B05				109 (4.29)	65 (2.56)
1FW606.-0.B07				129 (5.08)	85 (3.35)
1FW606.-0.B10				159 (6.26)	115 (4.53)
1FW606.-0.B15				209 (8.23)	165 (6.50)

© Siemens 2022

SIMOTICS T-1FW6 built-in torque motors – Water cooling

Dimensional drawings

Water cooling
1FW6090
1FW6130
1FW6150

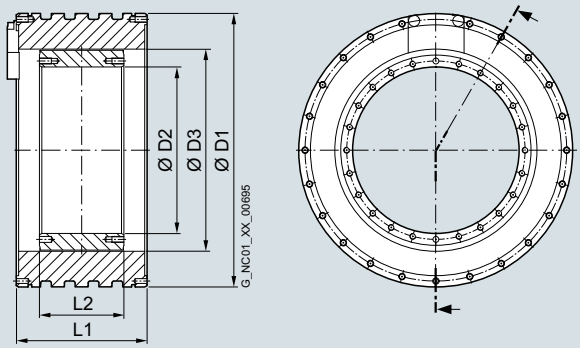

For motor	Dimensions in mm (inches)				
Type	D1	D2	D3	L1	L2
SIMOTICS T-1FW6 Standard built-in torque motors, water cooling					
1FW6090-0.B05	230 (9.06)	140 (5.51)	170 (6.69)	90 (3.54)	51 (2.01)
1FW6090-0.B07				110 (4.33)	71 (2.80)
1FW6090-0.B10				140 (5.51)	101 (3.98)
1FW6090-0.B15				190 (7.48)	151 (5.94)
1FW6130-0.B05	310 (12.20)	220 (8.66)	254 (10.00)	90 (3.54)	51 (2.01)
1FW6130-0.B07				110 (4.33)	71 (2.80)
1FW6130-0.B10				140 (5.51)	101 (3.98)
1FW6130-0.B15				190 (7.48)	151 (5.94)
1FW6150-0.B05	385 (15.16)	265 (10.43)	300 (11.81)	110 (4.33)	51 (2.01)
1FW6150-0.B07				130 (5.12)	71 (2.80)
1FW6150-0.B10				160 (6.30)	101 (3.98)
1FW6150-0.B15				210 (8.27)	151 (5.94)

© Siemens 2022

Dimensional drawings

Water cooling
1FW6160
1FW6190
1FW6230
1FW6290

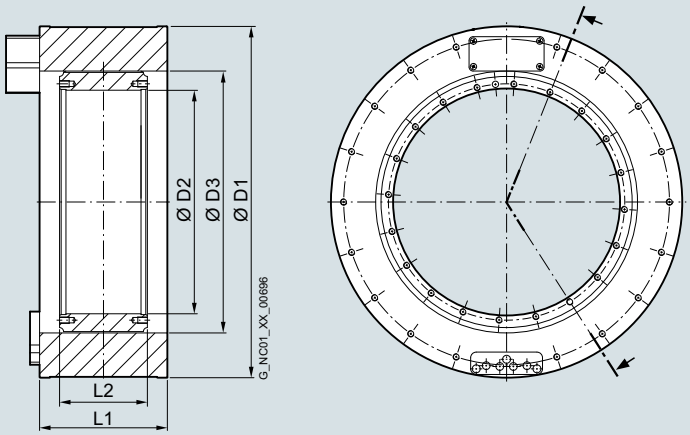

For motor	Dimensions in mm (inches)				
Type	D1	D2	D3	L1	L2
SIMOTICS T-1FW6 Standard built-in torque motors, water cooling					
1FW6160-0.B05	440 (17.32)	282 (11.10)	328 (12.91)	110 (4.33)	60 (2.36)
1FW6160-0.B07				130 (5.12)	80 (3.15)
1FW6160-0.B10-.J.2/-5G.2/-8FB2				160 (6.30)	110 (4.33)
1FW6160-0.B10-2PB2				170 (6.69)	110 (4.33)
1FW6160-0.B15-2J.2/-5G.2/-8FB2				210 (8.27)	160 (6.30)
1FW6160-0.B15-2PB2/-0WB2				220 (8.66)	160 (6.30)
1FW6160-0.B20-5G.2/-8FB2				260 (10.24)	210 (8.27)
1FW6160-0.B20-2PB2/-0WB2				270 (10.63)	210 (8.27)
1FW6190-0.B05	502 (19.76)	344 (13.54)	389 (15.31)	110 (4.33)	60 (2.36)
1FW6190-0.B07				130 (5.12)	80 (3.15)
1FW6190-0.B10-.J.2/-5G.2/-8FB2				160 (6.30)	110 (4.33)
1FW6190-0.B10-2PB2				170 (6.69)	110 (4.33)
1FW6190-0.B15-2J.2/-5G.2/-8FB2				210 (8.27)	160 (6.30)
1FW6190-0.B15-2PB2/-0WB2				220 (8.66)	160 (6.30)
1FW6190-0.B20-5G.2/-8FB2				260 (10.24)	210 (8.27)
1FW6190-0.B20-2PB2/-0WB2				270 (10.63)	210 (8.27)
1FW6230-0.B05	576 (22.68)	418 (16.46)	463 (18.23)	110 (4.33)	60 (2.36)
1FW6230-0.B07				130 (5.12)	80 (3.15)
1FW6230-0.B10				160 (6.30)	110 (4.33)
1FW6230-0.B15-4C.2/-5G.2/-8FB2/-2PB2				210 (8.27)	160 (6.30)
1FW6230-0.B15-0WB2				220 (8.66)	160 (6.30)
1FW6230-0.B20-5G.2/-8FB2/-2PB2				260 (10.24)	210 (8.27)
1FW6230-0.B20-0WB2				270 (10.63)	210 (8.27)
1FW6290-0.B07-5G.2/-0LB2	730 (28.74)	522 (20.55)	580 (22.83)	140 (5.51)	90 (3.54)
1FW6290-0.B07-2PB2				160 (6.30)	90 (3.54)
1FW6290-0.B11-7A.2/-0LB2				180 (7.09)	130 (5.12)
1FW6290-0.B11-2PB2				200 (7.87)	130 (5.12)
1FW6290-0.B15-7A.2/-0LB2				220 (8.66)	170 (6.69)
1FW6290-0.B15-2PB2				240 (9.45)	170 (6.69)
1FW6290-0.B20-0LB2				260 (10.24)	210 (8.27)
1FW6290-0.B20-2PB2				280 (11.02)	210 (8.27)

© Siemens 2022

Dimensional drawings

Water cooling
1FW6092
1FW6132
1FW6152

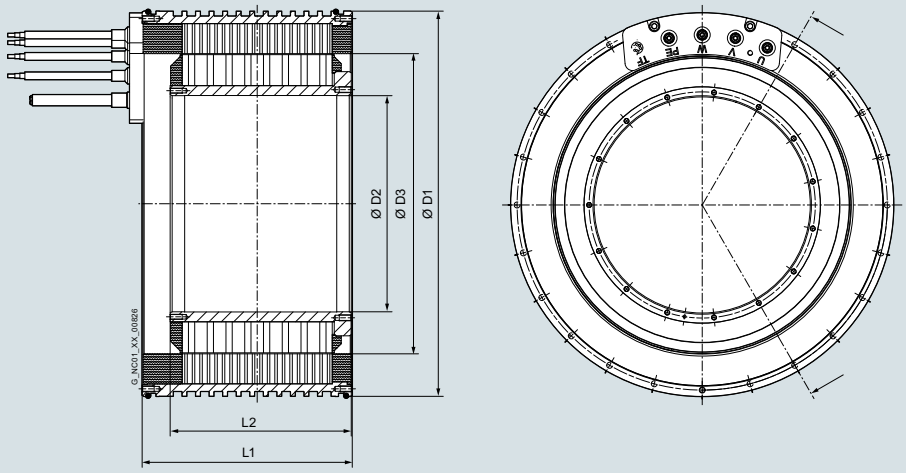

For motor	Dimensions in mm (inches)				
Type	D1	D2	D3	L1	L2
SIMOTICS T-1FW6 High Speed built-in torque motors, water cooling					
1FW6092-2PC05	230 (9.06)	89 (3.50)	170 (6.69)	100 (3.94)	81 (3.19)
1FW6092-2PC10				150 (5.91)	131 (5.16)
1FW6092-2PC15				200 (7.87)	181 (7.13)
1FW6132-2PC05	310 (12.20)	156 (6.14)	240 (9.45)	100 (3.94)	81 (3.19)
1FW6132-2PC10				150 (5.91)	131 (5.16)
1FW6132-2PC15				200 (7.87)	181 (7.13)
1FW6152-2PC05	385 (15.16)	216 (8.50)	300 (11.81)	110 (4.33)	81 (3.19)
1FW6152-2PC10				160 (6.30)	131 (5.16)
1FW6152-2PC15				210 (8.27)	181 (7.13)

© Siemens 2022

Dimensional drawings

Water cooling
1FW6192
1FW6232

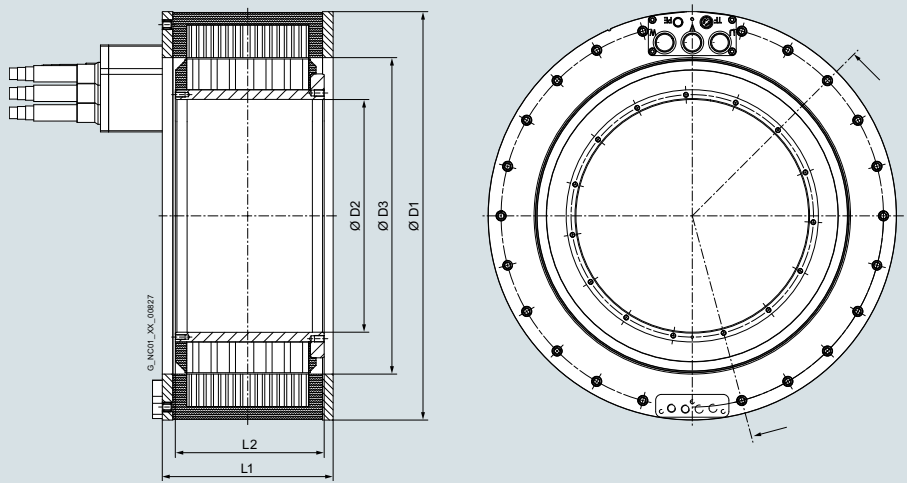

For motor	Dimensions in mm (inches)				
Type	D1	D2	D3	L1	L2
SIMOTICS T-1FW6 High Speed built-in torque motors, water cooling					
1FW6192-2.C05	502 (19.76)	286 (11.26)	389 (15.31)	110 (4.33)	83 (3.27)
1FW6192-2.C10-8F..				160 (6.30)	133 (5.24)
1FW6192-2.C10-2P..				170 (6.69)	133 (5.24)
1FW6192-2.C15-8F..				210 (8.27)	183 (7.20)
1FW6192-2.C15-0W..				220 (8.66)	183 (7.20)
1FW6192-2.C20-8F..				260 (10.24)	233 (9.17)
1FW6192-2.C20-0W..				270 (10.63)	233 (9.17)
1FW6232-2.C05	576 (22.68)	360 (14.17)	463 (18.23)	110 (4.33)	83 (3.27)
1FW6232-2.C10-2P..				160 (6.30)	133 (5.24)
1FW6232-2.C10-0W..				170 (6.69)	133 (5.24)
1FW6232-2.C15-2P..				210 (8.27)	183 (7.20)
1FW6232-2.C15-0W..				220 (8.66)	183 (7.20)
1FW6232-2.C20-2P..				260 (10.24)	233 (9.17)
1FW6232-2.C20-0W..				270 (10.63)	233 (9.17)

© Siemens 2022

Dimensional drawings

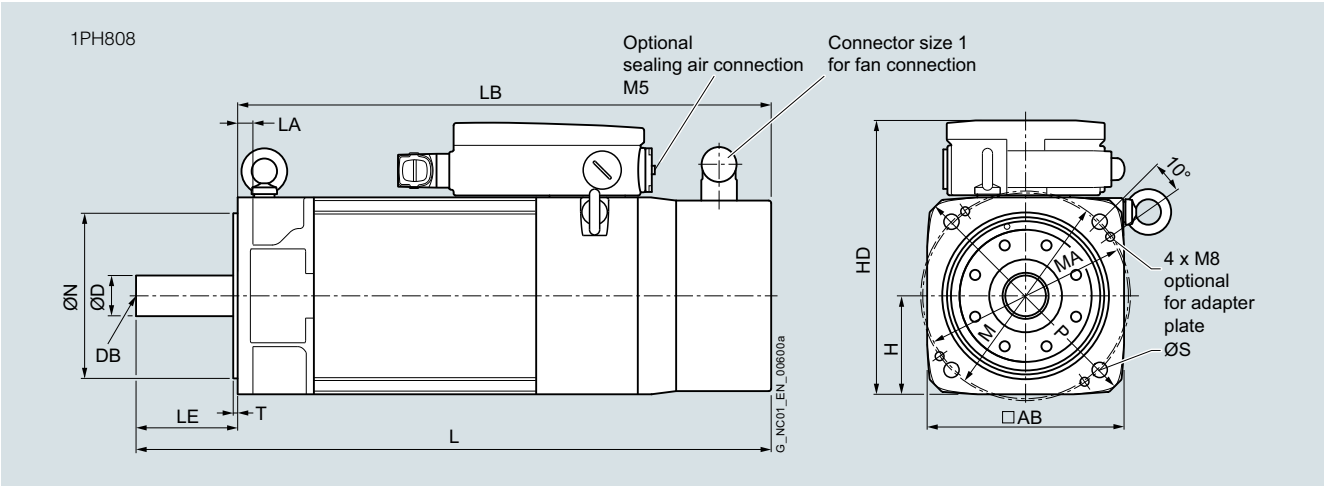

For motor		Dimensions in mm (inches)																
															Shaft extension DE		
Shaft height	Type	IEC	AB	H	HD	L	LA	LB	M	MA	N	P	S	T	**D**	DB	LE
1PH8 Premium Performance, type of construction IM B5, forced ventilation, solid shaft																	
80	1PH8081		155 (6.10)	77.5 (3.05)	213.5 (8.41)	375 (14.75)	12 (0.45)	325 (12.80)	165 (6.50)	162 (6.38)	130 (5.12)	200 (7.87)	12 (0.47)	3.5 (0.14)	**24 (0.94)**	M6	50 (1.97)
	1PH8083					425 (16.73)		375 (14.75)									
	1PH8087					475 (18.70)		425 (16.73)									

© Siemens 2022

Dimensional drawings

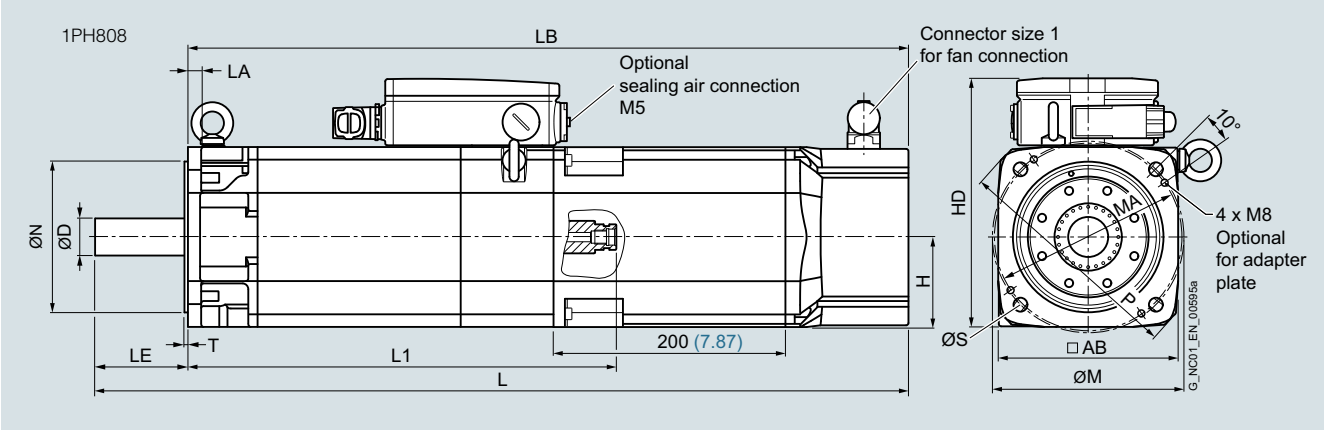

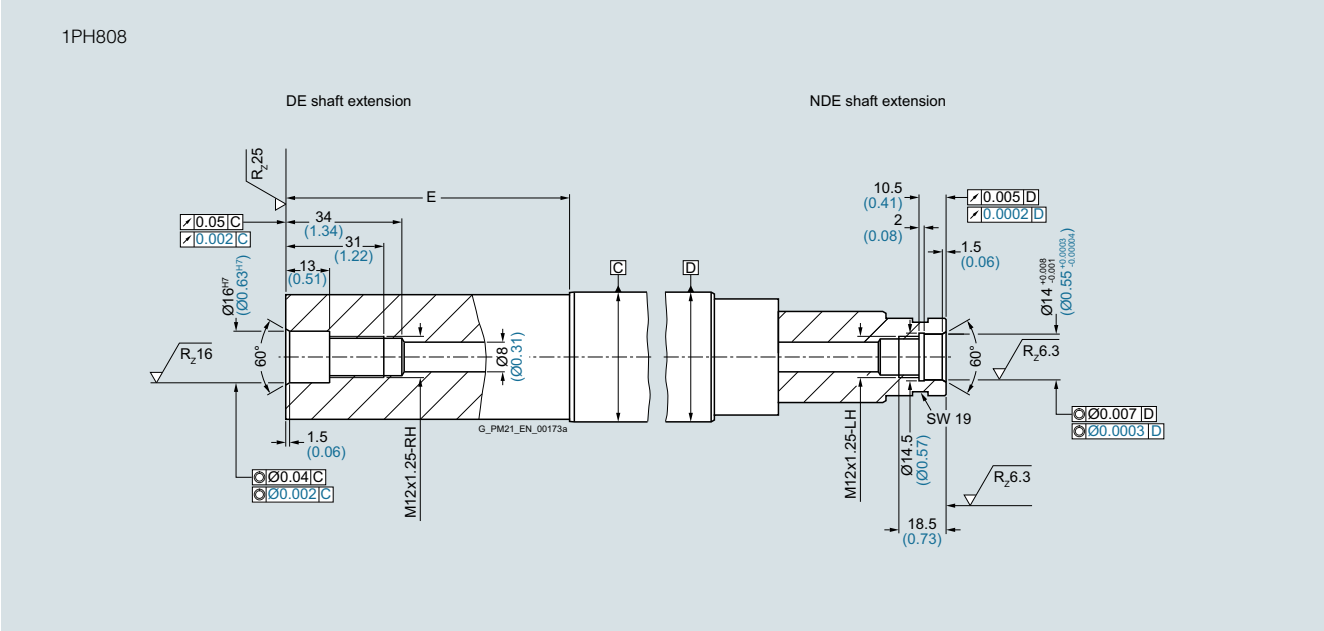

For motor		Dimensions in mm (inches)														Shaft extension DE		
Shaft height	Type	IEC	AB	H	HD	L	LA	LB	L1	M	MA	N	P	S	T	**D**	E	LE
1PH8 Premium Performance, type of construction IM B5, forced ventilation, hollow shaft																		
80	1PH8081		155 (6.10)	77.5 (3.05)	213.5 (8.41)	575 (22.64)	12 (0.45)	525 (20.67)	269.3 (10.60)	165 (6.50)	162 (6.38)	130 (5.12)	200 (7.87)	12 (0.47)	3.5 (0.14)	**24 (0.94)**	50 (1.97)	50 (1.97)
	1PH8083					625 (24.61)		575 (22.64)	319.3 (12.57)									
	1PH8087					675 (26.57)		625 (24.61)	369.3 (14.54)									

© Siemens 2022

Dimensional drawings
Main spindle motors

SIMOTICS M-1PH8 asynchronous motors > SH 80 – Forced ventilation

Dimensional drawings

1PH808

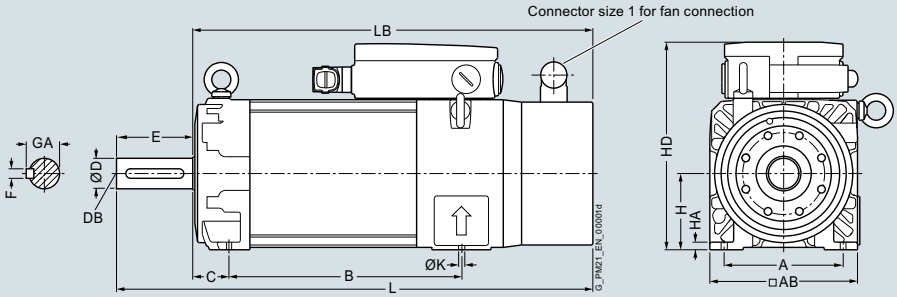

Version with hollow shaft

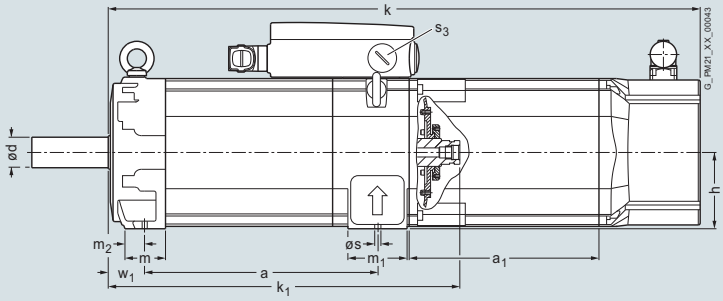

Hollow shaft

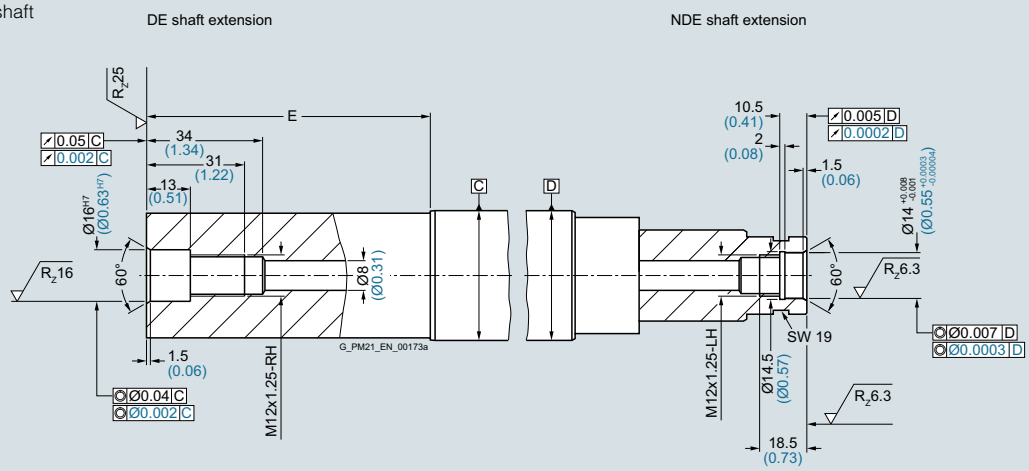

For motor		Dimensions in mm (inches)															
Shaft height	Type	DIN IEC	a B	b A	c HA	f AB	h H	k LB	m BA	m_1 –	m_2 –	n AA	p HD	p_1 –	s K	s_3 –	w_1 C
1PH8 type of construction IM B3, forced ventilation																	
80	1PH8083		194 (7.64)	125 (4.92)	8 (0.31)	155 (6.10)	80 (3.15)	375 (14.76)	42 (1.65)	62 (2.44)	20 (0.79)	35 (1.38)	216 (8.5)	253.5 (9.98)	10 (0.39)	M25×1.5	38 (1.50)
	1PH8087		244 (9.61)					425 (16.73)									

			Shaft extension DE					Version with hollow shaft	
Shaft height	Type	DIN IEC	**d** **D**	l E	d_6 DB	t GA	u F	k LB	k_1 –
80	1PH8083		**32** **(1.26)**	80 (3.15)	M12	35 (1.38)	10 (0.39)	575 (22.64)	319.3 (12.57)
	1PH8087							625 (24.61)	369.3 (14.54)

© Siemens 2022

Dimensional drawings

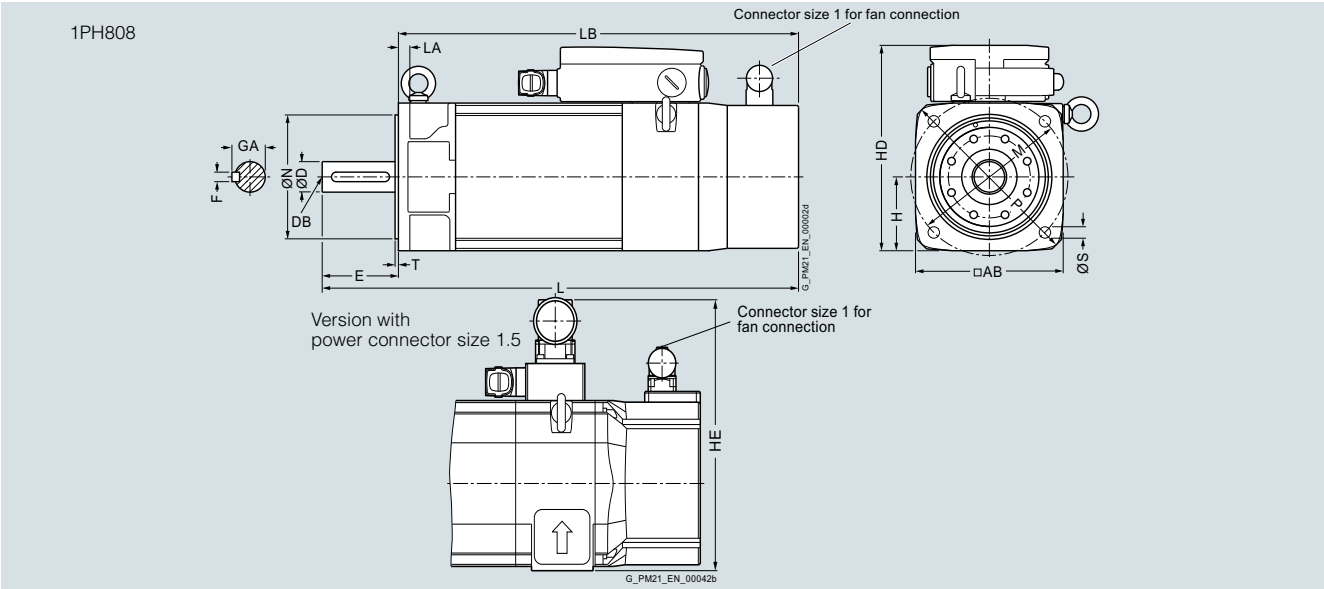

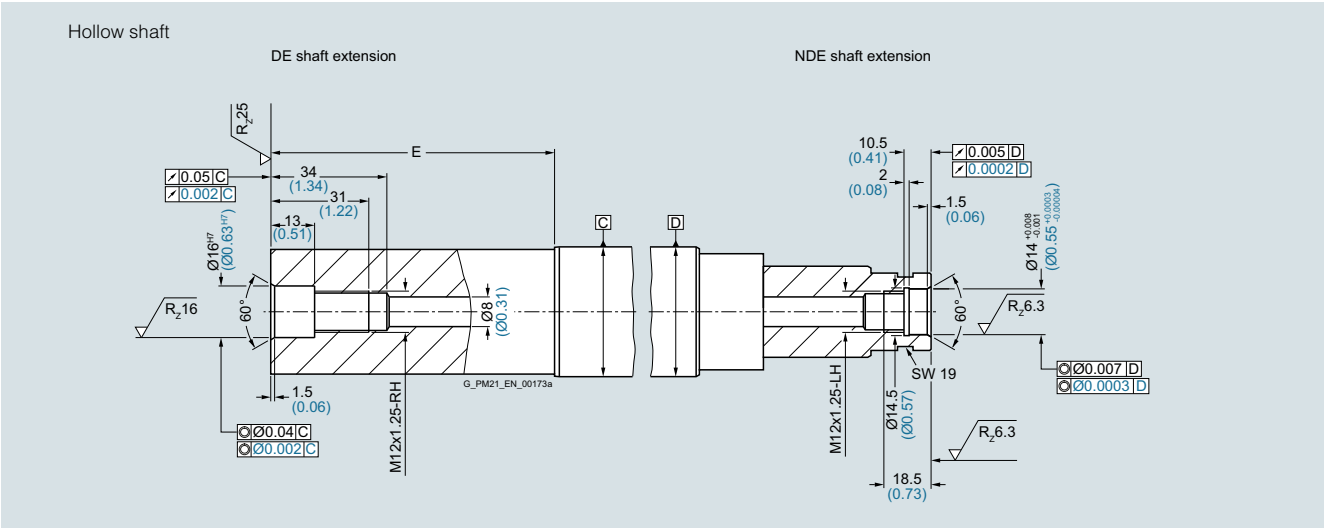

For motor		Dimensions in mm (inches)												
Shaft height	Type	DIN IEC	a_1 P	b_1 N	c_1 LA	e_1 M	f AB	f_1 T	h H	k LB	p HD	– HE	s_2 S
1PH8 type of construction IM B5, forced ventilation													
80	1PH8083		200 (7.87)	130 (5.12)	12 (0.47)	165 (6.50)	155 (6.10)	3.5 (0.14)	77.5 (3.05)	375 (14.76)	213.5 (8.41)	251 (9.88)	12 (0.47)
	1PH8087									425 (16.73)			

			Shaft extension DE						Version with hollow shaft
Shaft height	Type	DIN IEC	**d** **D**	l E	d_6 DB	i_2 E	t GA	u F	k LB
80	1PH8083		**32** **(1.26)**	80 (3.15)	M12	80 (3.15)	35 (1.38)	10 (0.39)	575 (22.64)
	1PH8087								625 (24.61)

© Siemens 2022

Dimensional drawings

1PH810

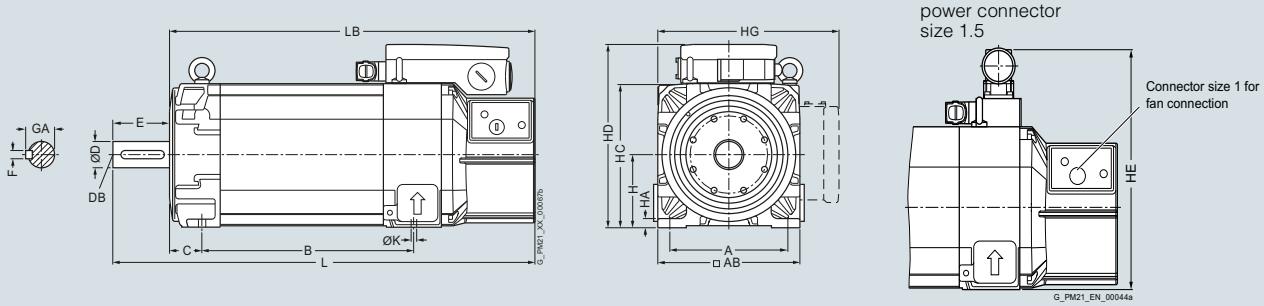

1PH813

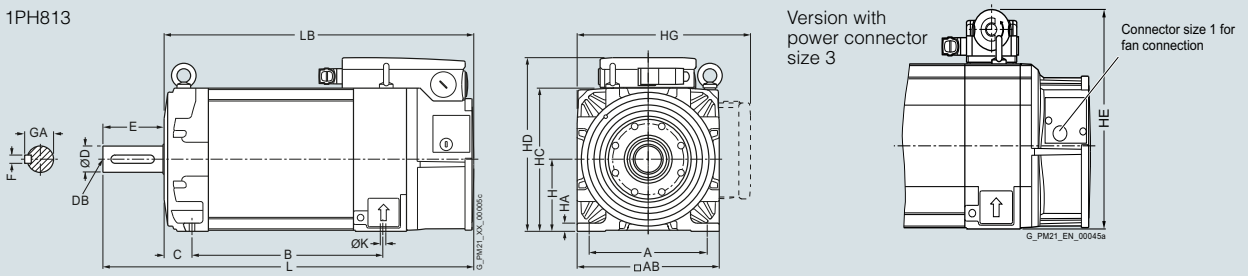

Version
with hollow shaft

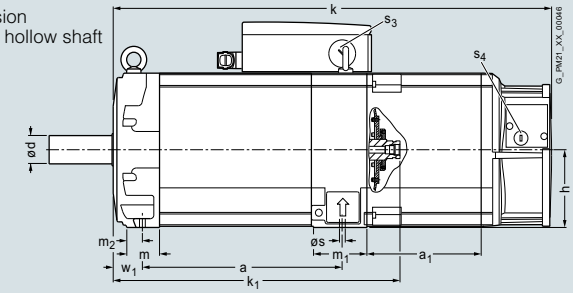

Hollow shaft
1PH810
1PH813

DE shaft extension

NDE shaft extension

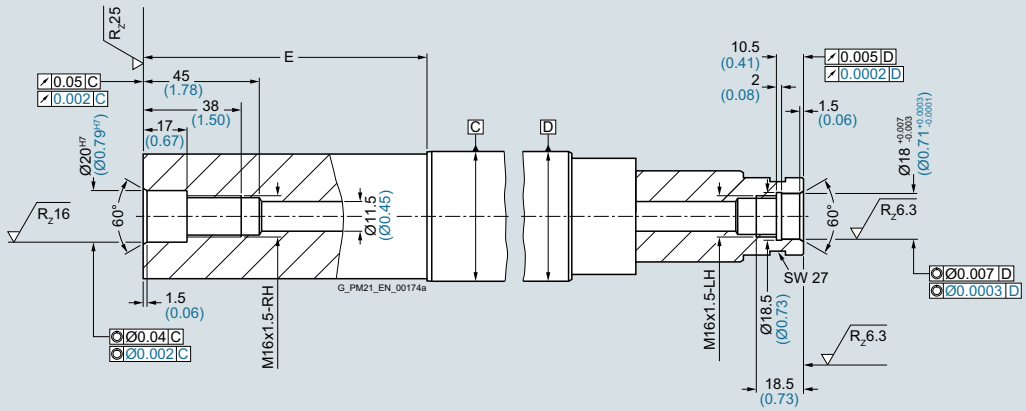

© Siemens 2022

Dimensional drawings

For motor		Dimensions in mm (inches)														
Shaft height	Type	DIN IEC	a B	b A	c HA	f AB	h H	k LB	m BA	m_1 –	m_2 –	n AA	p HD	– HE	p_2 HC	p_3 HG
1PH8 type of construction IM B3, forced ventilation																
100	1PH8101		167 (6.57)	160 (6.30)	11 (0.43)	196 (7.72)	100 (3.94)	369.5 (14.55)	49 (1.93)	74 (2.91)	24 (0.94)	40 (1.57)	252 (9.92)	294 (11.6)	198 (7.80)	276.5 (10.89)
	1PH8103		202.5 (7.97)					405 (15.94)								
	1PH8105		262 (10.31)					464.5 (18.29)								
	1PH8107		297.5 (11.71)					500 (19.69)								
132	1PH8131		220.5 (8.68)	216 (8.50)	15 (0.59)	260 (10.24)	132 (5.2)	439 (17.28)	57 (2.24)	93 (3.66)	27 (1.06)	52 (2.05)	317.5 (12.50)	347 (13.66)	262 (10.31)	357.5 (14.07)
	1PH8133		265.5 (10.45)					484 (19.06)								
	1PH8135		310.5 (12.22)					529 (20.83)								
	1PH8137		350.5 (13.80)					569 (22.40)								

							Shaft extension DE					Version with hollow shaft				
Shaft height	Type	DIN IEC	s K	s_3 –	s_4 –	w_1 C	**d D**	l E	d_6 DB	t GA	u F	k LB	k_1 –	p HD	p_3 HG	s_3 –
100	1PH8101		12 (0.47)	M32×1.5	M20×1.5	43 (1.69)	**38 (1.50)**	80 (3.15)	M12	41 (1.61)	10 (0.39)	569.5 (22.42)	312.3 (12.30)	266.5 (10.49)	276.5 (10.89)	M32×1.5
	1PH8103											605 (23.82)	347.8 (13.69)			
	1PH8105											664.5 (26.16)	407.3 (16.04)			
	1PH8107											700 (27.56)	442.8 (17.43)			
132	1PH8131		12 (0.47)	M40×1.5	M20×1.5	53 (2.09)	**48 (1.89)**	110 (4.33)	M16	51.5 (2.03)	14 (0.55)	639 (25.16)	372.8 (14.68)	347.5 (13.68)	357.5 (14.07)	M50×1.5
	1PH8133											684 (26.93)	417.8 (16.45)			
	1PH8135											729 (28.70)	462.8 (18.22)			
	1PH8137											769 (30.28)	502.8 (19.80)			

© Siemens 2022

Dimensional drawings

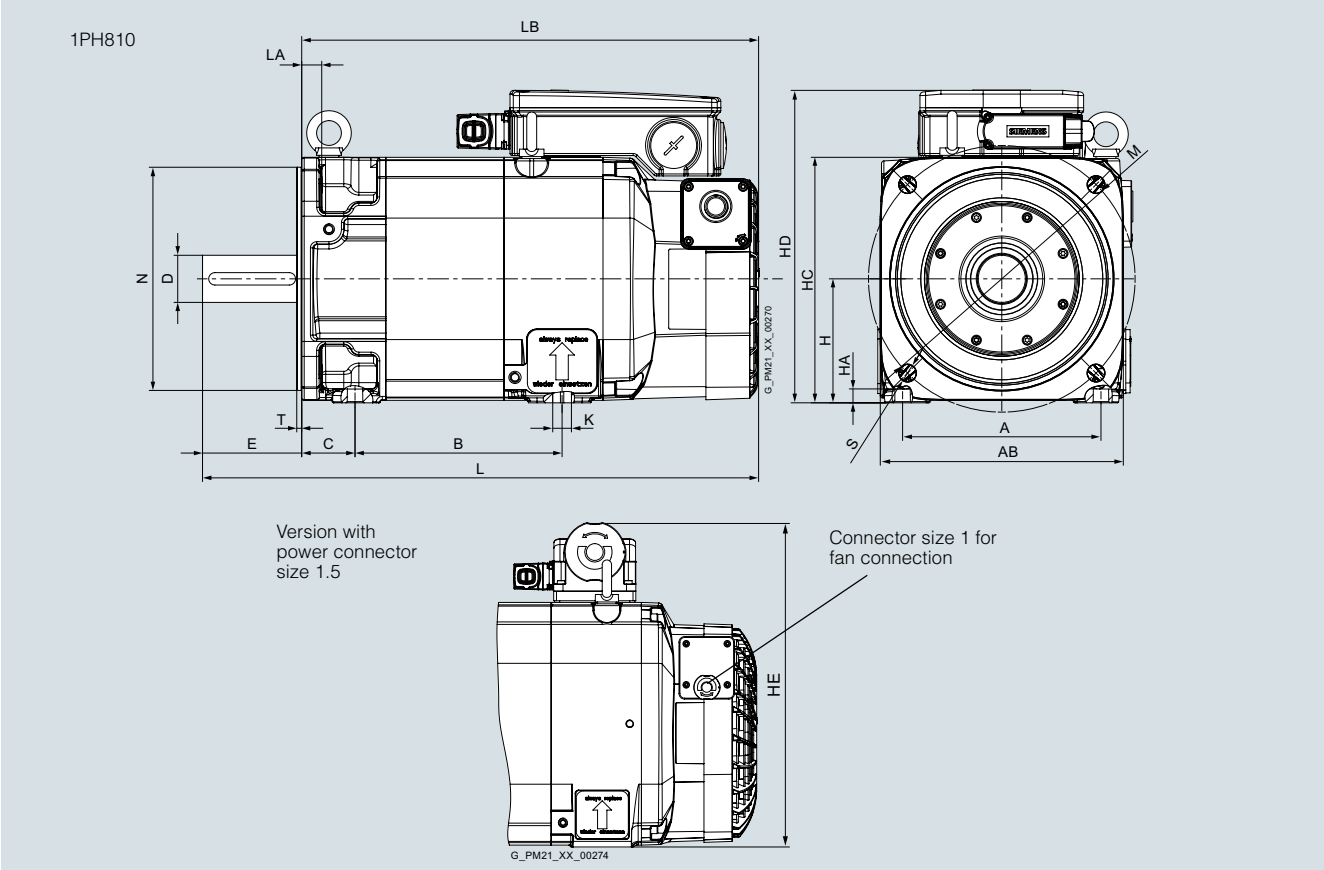

Dimensions in mm (inches)

Shaft height	Type	DIN IEC	a B	b A	b_1 N	c HA	L	c_1 LA	e_1 M	f AB	f_1 T	h H	k LB	m BA	m_1 –	m_2 –	p HD	– HE
1PH8 type of construction IM B35, forced ventilation																		
100	1PH8101		167 (6.57)	160 (6.30)	180 (7.09)	11 (0.43)	448.5 (17.66)	16 (0.63)	215 (8.46)	196 (7.72)	4 (0.16)	100 (3.94)	368.5 (14.51)	44 (1.73)	74 (2.91)	19 (0.75)	252 (9.92)	294 (11.57)
	1PH8103		202.5 (7.97)										405 (15.94)					
	1PH8105		262 (10.31)										464.5 (18.29)					
	1PH8107		297.5 (11.71)										500 (19.69)					

Shaft height	Type	DIN IEC	p_2 HC	p_3 HG	s K	s_2 –	s_3 –	s_4 –	w_1 C	Shaft extension DE **d D**	l L	d_6 DB	i_2 E	Version with hollow shaft k LB	k_1 –	p HD	p_3 –	s_3 –
100	1PH8101		198 (7.80)	276.5 (10.89)	12 (0.47)	14 (0.55)	M32×1.5	M20×1.5	43 (1.69)	**38 (1.50)**	80 (3.15)	M12	80 (3.15)	569.5 (22.42)	312.3 (12.30)	266.5 (10.49)	276.5 (10.89)	M32×1.5
	1PH8103													605 (23.82)	347.8 (13.69)			
	1PH8105													664.5 (26.16)	407.3 (16.04)			
	1PH8107													700 (27.56)	442.8 (17.43)			

© Siemens 2022

Dimensional drawings

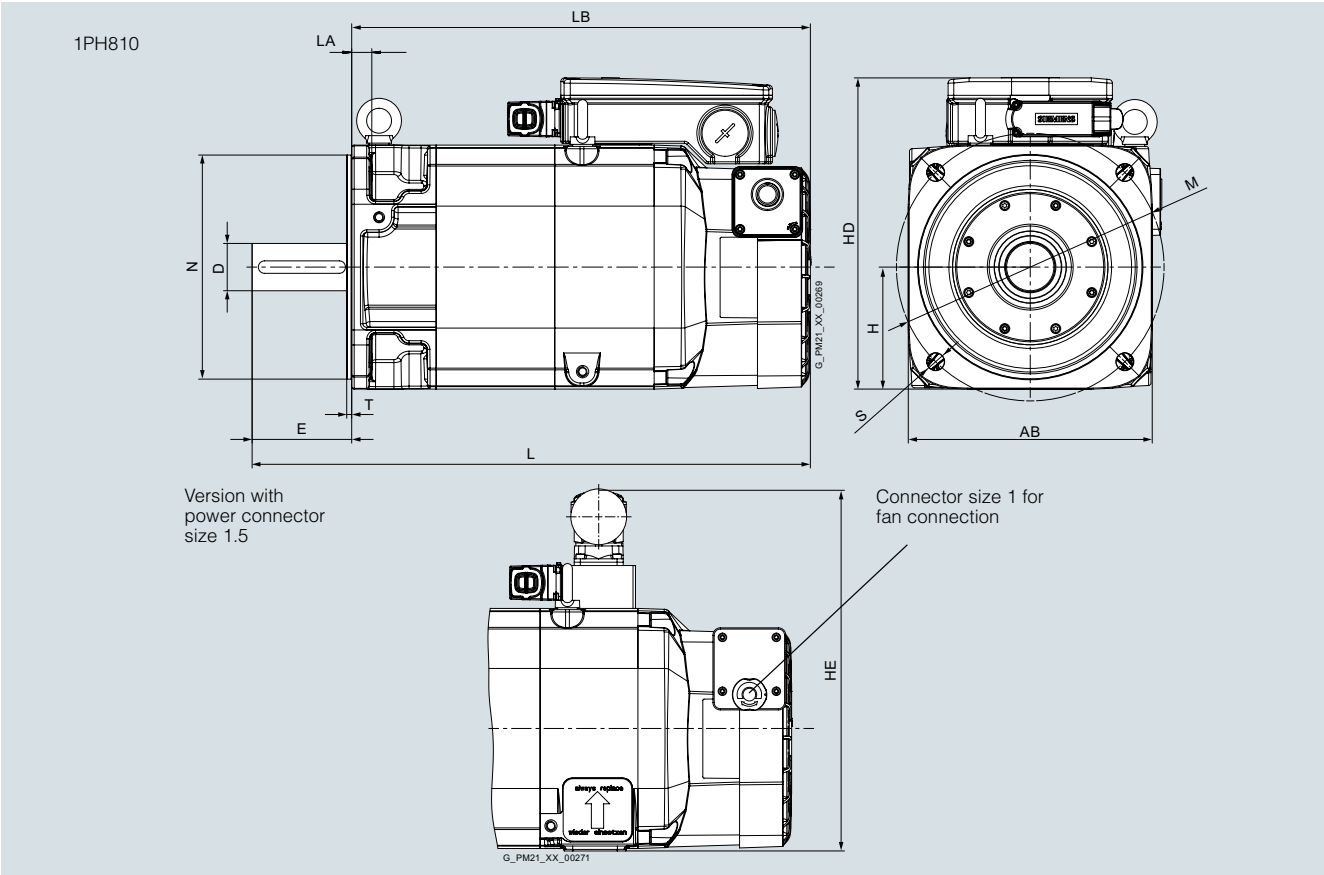

For motor		Dimensions in mm (inches)										
Shaft height	Type	DIN IEC	b_1 N	c_1 LA	e_1 M	f AB	f_1 T	h H	k L	k LB	p HD	– HE
1PH8 type of construction IM B5, forced ventilation												
100	1PH8101		180 (7.09)	16 (0.63)	215 (8.46)	196 (7.72)	4 (0.16)	98 (3.86)	448.5 (17.66)	368.5 (14.51)	250 (9.84)	292 (11.50)
	1PH8103									405 (15.94)		
	1PH8105									464.5 (18.29)		
	1PH8107									500 (19.69)		

						Shaft extension DE				Version with hollow shaft			
Shaft height	Type	DIN IEC	s_2 S	s_3 –	s_4 –	**d D**	l L	d_6 DB	i_2 E	k LB	k_1 –	p HD	s_3 –
100	1PH8101		14 (0.55)	M32×1.5	M20×1.5	**38 (1.50)**	80 (3.15)	M12	80 (3.15)	569.5 (22.42)	312.3 (12.30)	264.5 (10.41)	M32×1.5
	1PH8103									605 (23.82)	347.8 (13.69)		
	1PH8105									664.5 (16.16)	407.3 (16.04)		
	1PH8107									700 (17.56)	442.8 (17.43)		

© Siemens 2022

Dimensional drawings

1PH813

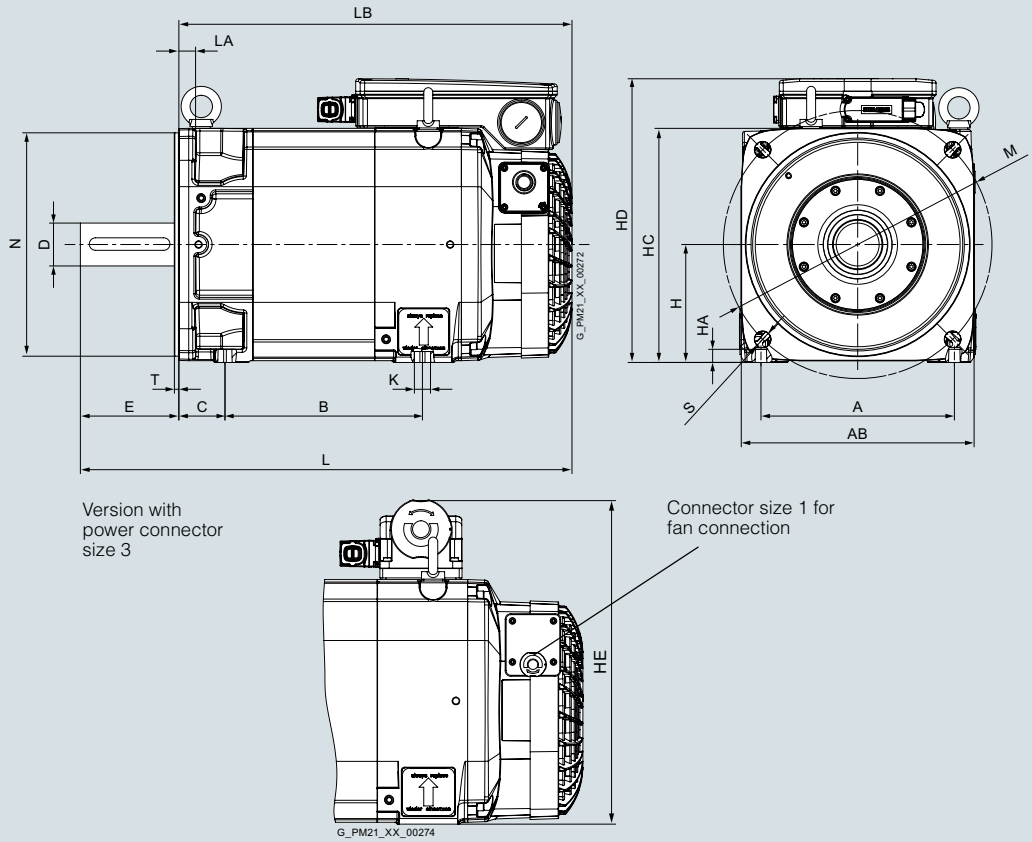

For motor		Dimensions in mm (inches)																
Shaft height	Type	DIN IEC	a B	b A	b_1 N	c HA	c_1 LA	e_1 M	f AB	f_1 T	h H	L	k LB	m BA	m_1 –	m_2 –	p HD	– HE
1PH8 type of construction IM B35, forced ventilation																		
132	1PH8131		220.5 (8.68)	216 (8.50)	250 (9.84)	15 (0.59)	18.7 (0.74)	300 (11.81)	260 (10.24)	5 (0.20)	132 (5.20)	549 (21.69)	439 (17.28)	65 (2.56)	93 (3.66)	35 (1.38)	317.5 (12.50)	347 (13.66)
	1PH8133		265.5 (10.45)										484 (19.06)					
	1PH8135		310.5 (12.22)										529 (20.83)					
	1PH8137		350.4 (13.80)										569 (22.40)					

										Shaft extension DE				Version with hollow shaft				
Shaft height	Type	DIN IEC	p_2 HC	p_3 HG	s K	s_2 S	s_3 –	s_4 –	w_1 C	**d D**	l E	d_6 DB	i_2 E	k LB	k_1 –	p HD	p_3 –	s_3 –
132	1PH8131		262 (10.31)	357.5 (14.07)	12 (0.47)	18 (0.71)	M40×1.5	M20×1.5	53 (2.09)	**48 (1.89)**	110 (4.33)	M16	110 (4.33)	639 (25.16)	372.8 (14.68)	317.5 (12.50)	357.5 (14.07)	M50×1.5
	1PH8133													684 (26.93)	417.8 (16.45)			
	1PH8135													729 (28.70)	462.8 (18.22)			
	1PH8137													769 (30.28)	502.8 (19.80)			

© Siemens 2022

Dimensional drawings

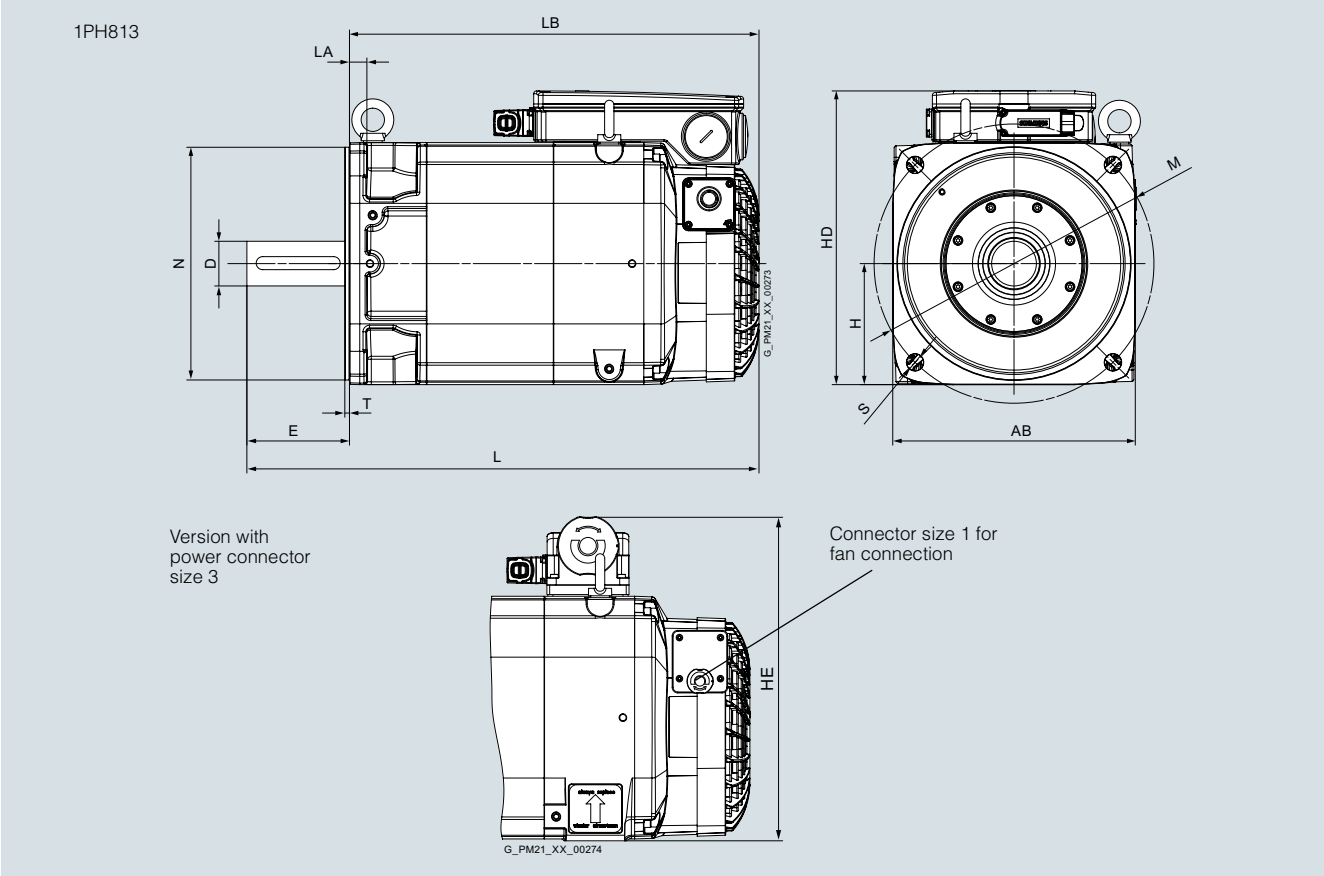

For motor		Dimensions in mm (inches)											
Shaft height	Type	DIN IEC	b_1 N	c_1 LA	e_1 M	f AB	f_1 T	h H	k L	k LB	p HD	– HE	
1PH8 type of construction IM B5, forced ventilation													
132	1PH8131		250 (9.84)	18.7 (0.74)	300 (11.81)	260 (10.24)	5 (0.20)	130 (5.12)	549 (21.61)	439 (17.28)	315.5 (12.42)	345 (13.58)	
	1PH8133									484 (19.06)			
	1PH8135									529 (20.83)			
	1PH8137									569 (22.40)			

						Shaft extension DE				Version with hollow shaft			
Shaft height	Type	DIN IEC	s_2 S	s_3 –	s_4 –	**d D**	l E	d_6 DB	i_2 E	k LB	k_1 –	p HD	s_3 –
132	1PH8131		18 (0.71)	M40×1.5	M20×1.5	**48 (1.89)**	110 (4.33)	M16	110 (4.33)	639 (25.16)	372.8 (14.68)	315.5 (12.42)	M50×1.5
	1PH8133									684 (26.93)	417.8 (16.45)		
	1PH8135									729 (28.70)	462.8 (18.22)		
	1PH8137									769 (30.28)	502.8 (19.80)		

© Siemens 2022

Dimensional drawings

1PH816

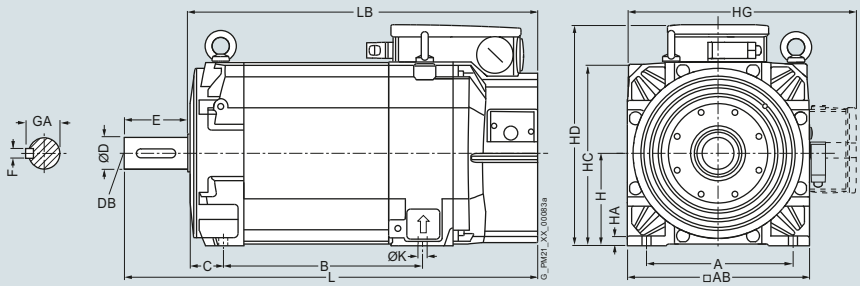

Version with hollow shaft

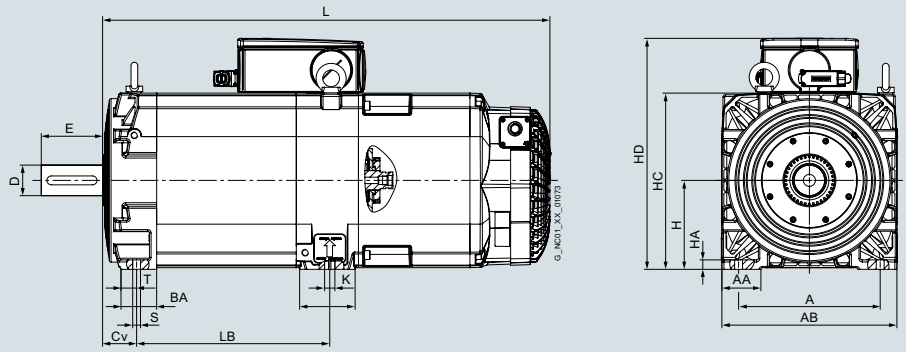

6

Hollow shaft

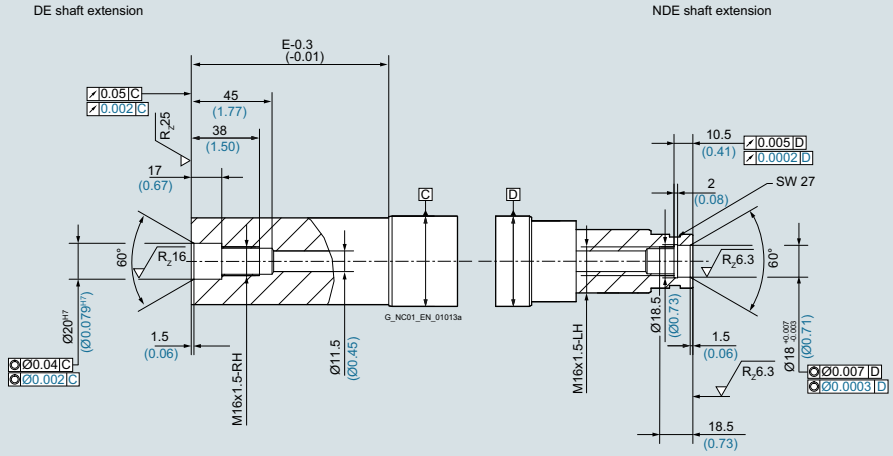

For motor		Dimensions in mm (inches)																
Shaft height	Type	DIN IEC	a B	a_1 P	b A	b_1 N	c HA	c_1 LA	e_1 M	f AB	f_1 T	h H	L	k LB	m BA	m_1 –	m_2 –	n AA
1PH8 type of construction IM B3, forced ventilation																		
160	1PH8163		346.5 (13.64)	–	254 (10.00)	–	17 (0.67)	23 (0.91)	–	314 (12.36)	–	160 (6.30)	602.5 (23.72)	610.5 (24.04)	64 (2.52)	99.5 (3.92)	28 (1.10)	70 (2.76)
	1PH8165		406.5 (16.00)											670.5 (26.40)				

											Shaft extension DE					Version with hollow shaft			
Shaft height	Type	DIN IEC	p HD	p_1 –	p_2 HC	p_3 HG	s K	s_2 S	s_3 –	s_4 –	w_1 Cv	**d D**	d_6 DB	l E	t GA	u F	k LB	k_1 –	p HD	s_3 –
160	1PH8163		382.5 (15.06)	–	317 (12.48)	412.5 (16.24)	14 (0.55)	–	M50×1.5	M20×1.5	61 (2.40)	**55 (2.17)**	M20	110 (4.33)	59 (2.32)	16 (0.63)	810.5 (31.91)	520.8 (20.50)	415.5 (16.36)	M63×1.5
	1PH8165																870.5 (34.27)	580.8 (22.87)		

© Siemens 2022

Dimensional drawings

1PH816

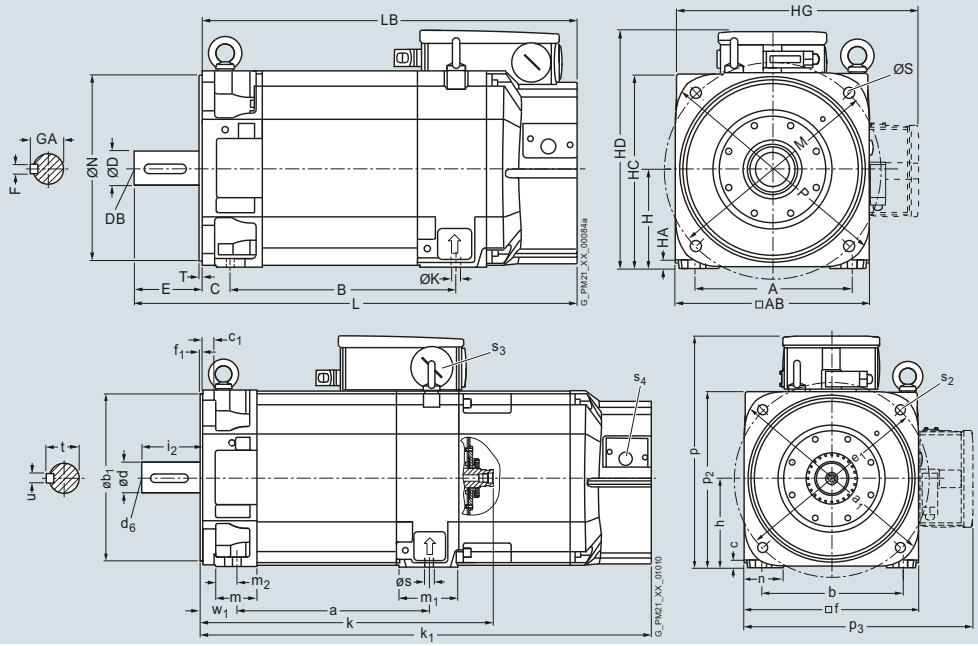

Version with hollow shaft

Hollow shaft

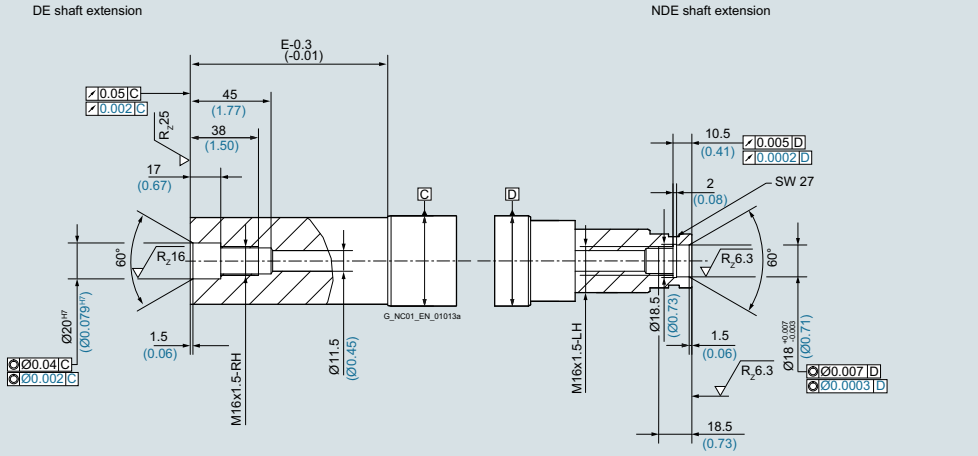

For motor		Dimensions in mm (inches)																
Shaft height	Type	DIN IEC	a B	a_1 P	b A	b_1 N	c HA	c_1 LA	e_1 M	f AB	f_1 T	h H	k LB	m BA	m_1 –	m_2 –	n AA	
1PH8 type of construction IM B5/IM B35, forced ventilation																		
160	1PH8163		346.5 (13.64)	393 (15.47)	254 (10.00)	300 (11.81)	17 (0.67)	–	350 (13.78)	314 (12.36)	5 (0.20)	160 (6.30)	610.5 (24.04)	55 (2.17)	99.5 (3.92)	19 (0.75)	70 (2.76)	
	1PH8165		406.5 (16.00)										670.5 (26.40)					

												Shaft extension DE					Version with hollow shaft			
Shaft height	Type	DIN IEC	p HD	p_1 –	p_2 HC	p_3 HG	s K	s_2 S	s_3 –	s_4 –	w_1 C	**d** **D**	d_6 DB	i_2 E	t GA	u F	k LB	k_1 –	p HD	s_3 –
160	1PH8163		382.5 (15.06)	–	317 (12.48)	412.5 (16.24)	14 (0.55)	18 (0.71)	M50×1.5	M20×1.5	61 (2.40)	**55** **(2.17)**	M20	110 (4.33)	59 (2.32)	16 (0.63)	810.5 (31.91)	520.8 (20.50)	415.5 (16.36)	M63×1.5
	1PH8165																870.5 (34.27)	580.8 (22.87)		

© Siemens 2022

Dimensional drawings

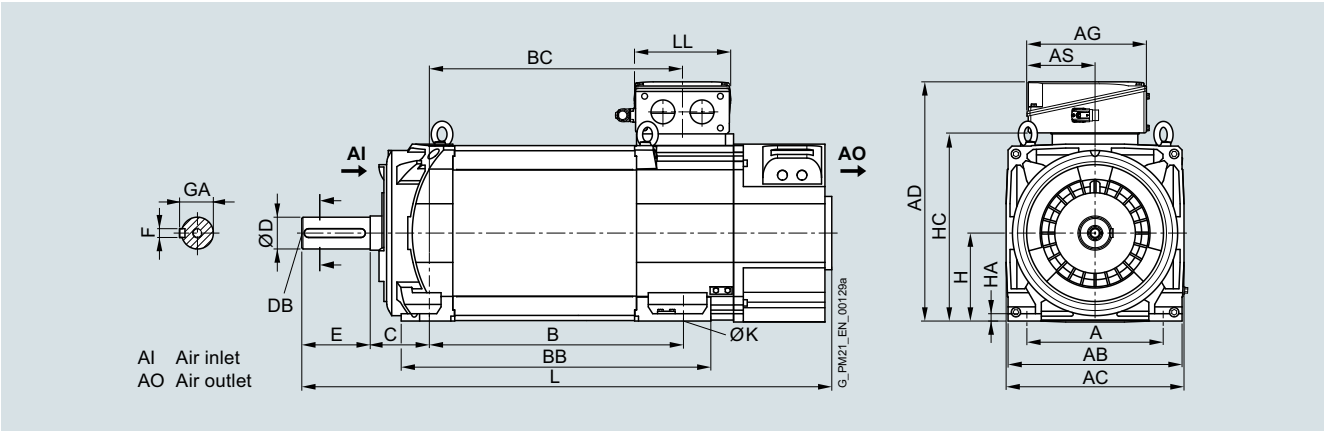

For motor		Dimensions in mm (inches)																
Shaft height	Type	IEC	A	AB	AC	B	BB	C	D	DB	E	F	GA	H	HA	HC	K	L
1PH8 type of construction IM B3, forced ventilation – direction of air flow DE → NDE																		
180	1PH8184		279 (10.98)	356 (14.02)	364 (14.33)	430 (16.93)	545 (21.46)	121 (4.76)	65 (2.56)	M20	140 (5.51)	18 (0.71)	69 (2.72)	180 (7.09)	15 (0.59)	383 (15.08)	14.5 (0.57)	995 (39.17)
	1PH8186					520 (20.47)	635 (25.00)											1085 (42.72)

Terminal box		Dimensions in mm (inches)					
Shaft height	Type	IEC	AD	AG	AS	BC	LL
Terminal box type 1XB7 322							
180	1PH8184		490 (19.29)	245 (9.65)	140 (5.51)	429 (16.89)	196 (7.72)
	1PH8186					519 (20.43)	
Terminal box type 1XB7 422							
180	1PH8184		533 (20.98)	281 (11.06)	176 (6.93)	429 (16.89)	233 (9.17)
	1PH8186					519 (20.43)	
Terminal box type 1XB7 700							
180	1PH8184		586 (23.07)	297 (11.69)	156 (6.14)	429 (16.89)	310 (12.20)
	1PH8186					519 (20.43)	

© Siemens 2022

Dimensional drawings

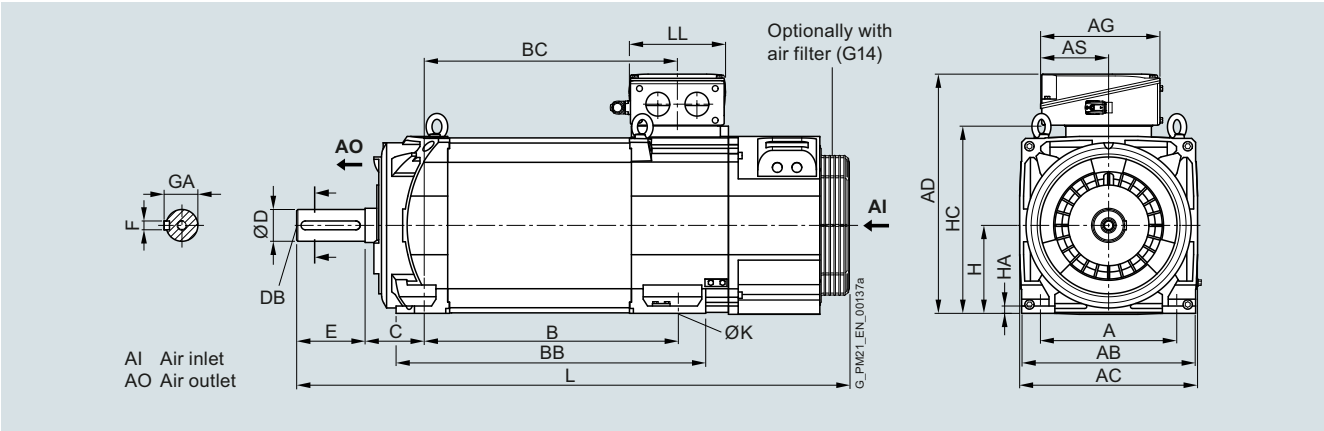

For motor		Dimensions in mm (inches)																
Shaft height	Type	IEC	A	AB	AC	B	BB	C	D	DB	E	F	GA	H	HA	HC	K	L
1PH8 type of construction IM B3, forced ventilation – direction of air flow NDE → DE																		
180	1PH8184		279 (10.98)	356 (14.02)	364 (14.33)	430 (16.93)	545 (21.46)	121 (4.76)	65 (2.56)	M20	140 (5.51)	18 (0.71)	69 (2.72)	180 (7.09)	15 (0.59)	383 (15.08)	14.5 (0.57)	1047 (41.22)
	1PH8186					520 (20.47)	635 (25.00)											1137 (44.76)

Terminal box		Dimensions in mm (inches)					
Shaft height	Type	IEC	AD	AG	AS	BC	LL
Terminal box type 1XB7 322							
180	1PH8184		490 (19.29)	245 (9.65)	140 (5.51)	429 (16.89)	196 (7.72)
	1PH8186					519 (20.43)	
Terminal box type 1XB7 422							
180	1PH8184		533 (20.98)	281 (11.06)	176 (6.93)	429 (16.89)	233 (9.17)
	1PH8186					519 (20.43)	
Terminal box type 1XB7 700							
180	1PH8184		586 (23.07)	297 (11.69)	156 (6.14)	429 (16.89)	310 (12.20)
	1PH8186					519 (20.43)	

© Siemens 2022

Dimensional drawings

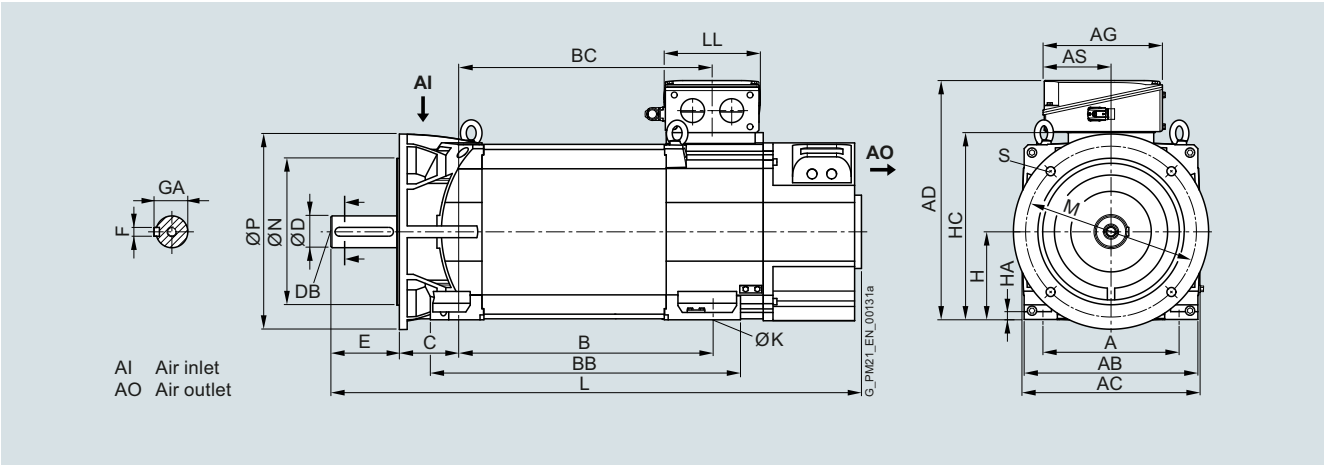

For motor		Dimensions in mm (inches)																				
Shaft height	Type	IEC	A	AB	AC	B	BB	C	D	DB	E	F	GA	H	HA	HC	K	L	M	N	P	S
1PH8 type of construction IM B35, forced ventilation – direction of air flow DE → NDE, flange A400 (option K90)																						
180	1PH8184		279 (10.98)	356 (14.02)	364 (14.33)	430 (16.93)	545 (21.46)	121 (4.76)	65 (2.56)	M20	140 (5.51)	18 (0.71)	69 (2.72)	180 (7.09)	15 (0.59)	383 (15.08)	14.5 (0.57)	995 (39.17)	350 (13.78)	300 (11.81)	400 (15.75)	18.5 (0.73)
	1PH8186					520 (20.47)	635 (25.00)											1085 (42.72)				

Terminal box		Dimensions in mm (inches)					
Shaft height	Type	IEC	AD	AG	AS	BC	LL
Terminal box type 1XB7 322							
180	1PH8184		490 (19.29)	245 (9.65)	140 (5.51)	429 (16.89)	196 (7.72)
	1PH8186					519 (20.43)	
Terminal box type 1XB7 422							
180	1PH8184		533 (20.98)	281 (11.06)	176 (6.93)	429 (16.89)	233 (9.17)
	1PH8186					519 (20.43)	
Terminal box type 1XB7 700							
180	1PH8184		586 (23.07)	297 (11.69)	156 (6.14)	429 (16.89)	310 (12.20)
	1PH8186					519 (20.43)	

© Siemens 2022

Dimensional drawings

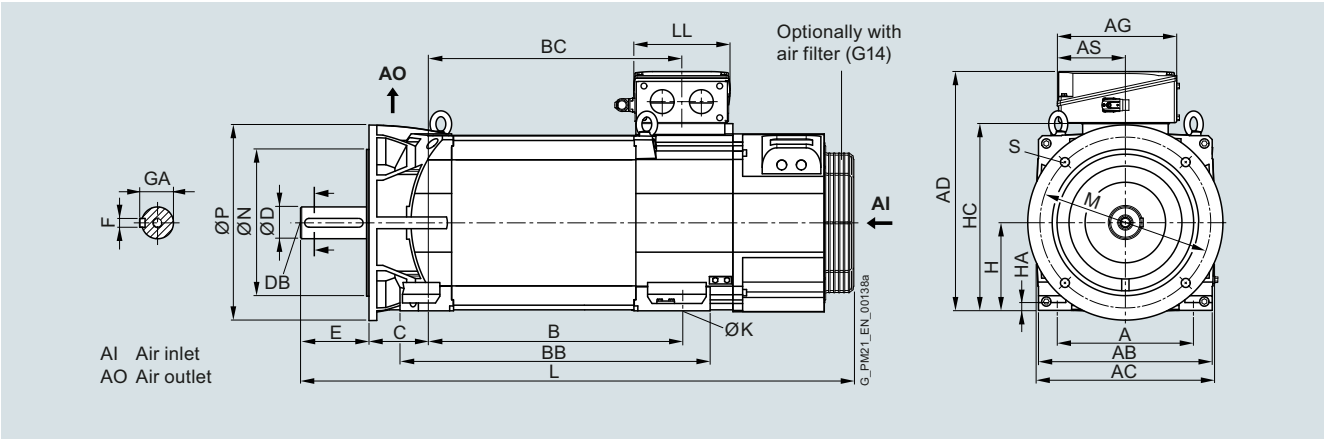

For motor		Dimensions in mm (inches)																				
Shaft height	Type	IEC	A	AB	AC	B	BB	C	D	DB	E	F	GA	H	HA	HC	K	L	M	N	P	S
1PH8 type of construction IM B35, forced ventilation – direction of air flow NDE → DE, flange A400																						
180	1PH8184		279 (10.98)	356 (14.02)	364 (14.33)	430 (16.93)	545 (21.46)	121 (4.76)	65 (2.56)	M20	140 (5.51)	18 (0.71)	69 (2.72)	180 (7.09)	15 (0.59)	383 (15.08)	14.5 (0.57)	1047 (41.22)	350 (13.78)	300 (11.81)	400 (15.75)	18.5 (0.73)
	1PH8186					520 (20.47)	635 (25.00)											1137 (44.76)				

Terminal box		Dimensions in mm (inches)					
Shaft height	Type	IEC	AD	AG	AS	BC	LL
Terminal box type 1XB7 322							
180	1PH8184		490 (19.29)	245 (9.65)	140 (5.51)	429 (16.89)	196 (7.72)
	1PH8186					519 (20.43)	
Terminal box type 1XB7 422							
180	1PH8184		533 (20.98)	281 (11.06)	176 (6.93)	429 (16.89)	233 (9.17)
	1PH8186					519 (20.43)	
Terminal box type 1XB7 700							
180	1PH8184		586 (23.07)	297 (11.69)	156 (6.14)	429 (16.89)	310 (12.20)
	1PH8186					519 (20.43)	

© Siemens 2022

Dimensional drawings

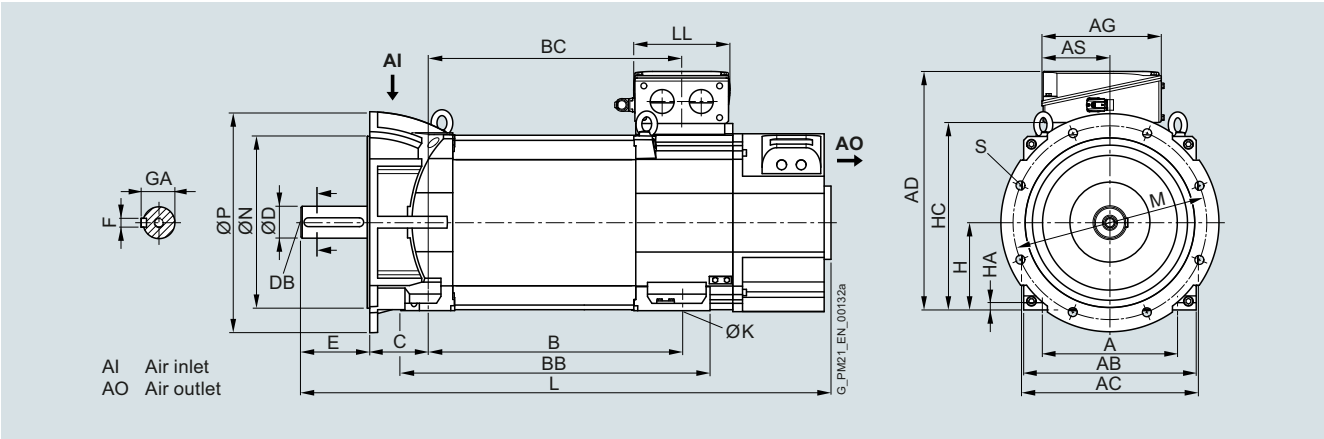

For motor		Dimensions in mm (inches)																				
Shaft height	Type	IEC	A	AB	AC	B	BB	C	D	DB	E	F	GA	H	HA	HC	K	L	M	N	P	S
1PH8 type of construction IM B35, forced ventilation – direction of air flow DE → NDE, flange A450																						
180	1PH8184		279 (10.98)	356 (14.02)	364 (14.33)	430 (16.93)	545 (21.46)	121 (4.76)	65 (2.56)	M20	140 (5.51)	18 (0.71)	69 (2.72)	180 (7.09)	15 (0.59)	383 (15.08)	14.5 (0.57)	995 (39.17)	400 (15.75)	350 (13.78)	450 (17.72)	18.5 (0.73)
	1PH8186					520 (20.47)	635 (25.00)											1085 (42.72)				

Terminal box		Dimensions in mm (inches)					
Shaft height	Type	IEC	AD	AG	AS	BC	LL
Terminal box type 1XB7 322							
180	1PH8184		490 (19.29)	245 (9.65)	140 (5.51)	429 (16.89)	196 (7.72)
	1PH8186					519 (20.43)	
Terminal box type 1XB7 422							
180	1PH8184		533 (20.98)	281 (11.06)	176 (6.93)	429 (16.89)	233 (9.17)
	1PH8186					519 (20.43)	
Terminal box type 1XB7 700							
180	1PH8184		586 (23.07)	297 (11.69)	156 (6.14)	429 (16.89)	310 (12.20)
	1PH8186					519 (20.43)	

© Siemens 2022

Dimensional drawings

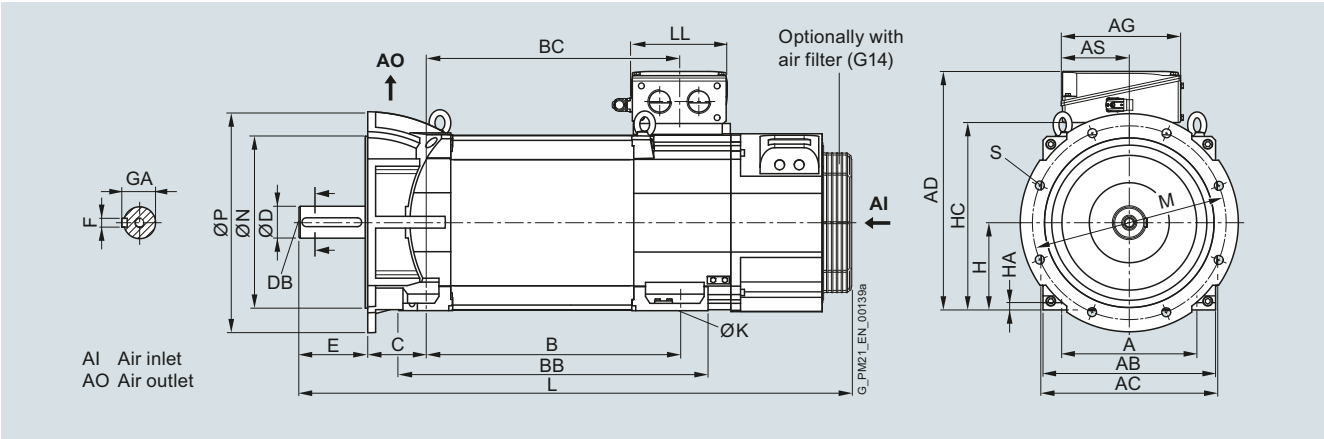

For motor		Dimensions in mm (inches)																				
Shaft height	Type	IEC	A	AB	AC	B	BB	C	D	DB	E	F	GA	H	HA	HC	K	L	M	N	P	S
1PH8 type of construction IM B35, forced ventilation – direction of air flow NDE → DE, flange A450																						
180	1PH8184		279 (10.98)	356 (14.02)	364 (14.33)	430 (16.93)	545 (21.46)	121 (4.76)	65 (2.56)	M20	140 (5.51)	18 (0.71)	69 (2.72)	180 (7.09)	15 (0.59)	383 (15.08)	14.5 (0.57)	1047 (41.22)	400 (15.75)	350 (13.78)	450 (17.72)	18.5 (0.73)
	1PH8186					520 (20.47)	635 (25.00)											1137 (44.76)				

Terminal box		Dimensions in mm (inches)					
Shaft height	Type	IEC	AD	AG	AS	BC	LL
Terminal box type 1XB7 322							
180	1PH8184		490 (19.29)	245 (9.65)	140 (5.51)	429 (16.89)	196 (7.72)
	1PH8186					519 (20.43)	
Terminal box type 1XB7 422							
180	1PH8184		533 (20.98)	281 (11.06)	176 (6.93)	429 (16.89)	233 (9.17)
	1PH8186					519 (20.43)	
Terminal box type 1XB7 700							
180	1PH8184		586 (23.07)	297 (11.69)	156 (6.14)	429 (16.89)	310 (12.20)
	1PH8186					519 (20.43)	

© Siemens 2022

Dimensional drawings

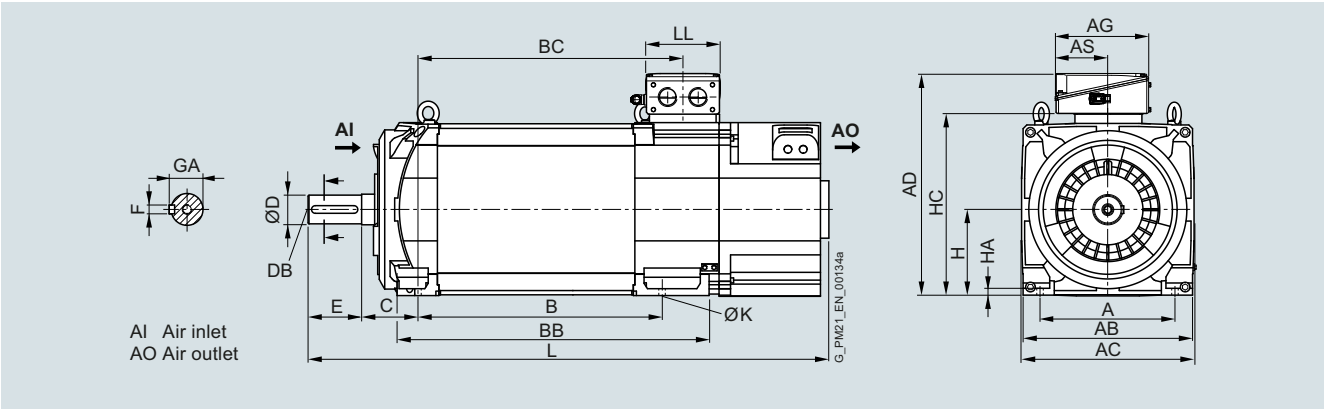

For motor		Dimensions in mm (inches)																
Shaft height	Type	IEC	A	AB	AC	B	BB	C	D	DB	E	F	GA	H	HA	HC	K	L
1PH8 type of construction IM B3, forced ventilation – direction of air flow DE → NDE																		
225	1PH8224		356 (14.02)	446 (17.56)	454 (17.87)	445 (17.52)	625 (24.61)	149 (5.87)	75 (2.95)	M20	140 (5.51)	20 (0.79)	79.5 (3.13)	225 (8.86)	18 (0.71)	475 (18.70)	18.5 (0.73)	1171 (46.10)
	1PH8226					545 (21.46)	725 (28.54)											1271 (40.04)
	1PH8228					635 (25.00)	815 (32.09)											1361 (53.58)

Terminal box		Dimensions in mm (inches)					
Shaft height	Type	IEC	AD	AG	AS	BC	LL
Terminal box type 1XB7 322							
225	1PH8224		582 (22.91)	245 (9.65)	140 (5.51)	481 (18.94)	196 (7.72)
	1PH8226					581 (22.87)	
	1PH8228					671 (26.42)	
Terminal box type 1XB7 422							
225	1PH8224		625 (24.61)	281 (11.06)	176 (6.93)	481 (18.94)	233 (9.17)
	1PH8226					581 (22.87)	
	1PH8228					671 (26.42)	
Terminal box type 1XB7 700							
225	1PH8224		678 (26.69)	297 (11.69)	156 (6.14)	481 (18.94)	310 (12.20)
	1PH8226					581 (22.87)	
	1PH8228					671 (26.42)	

© Siemens 2022

Dimensional drawings

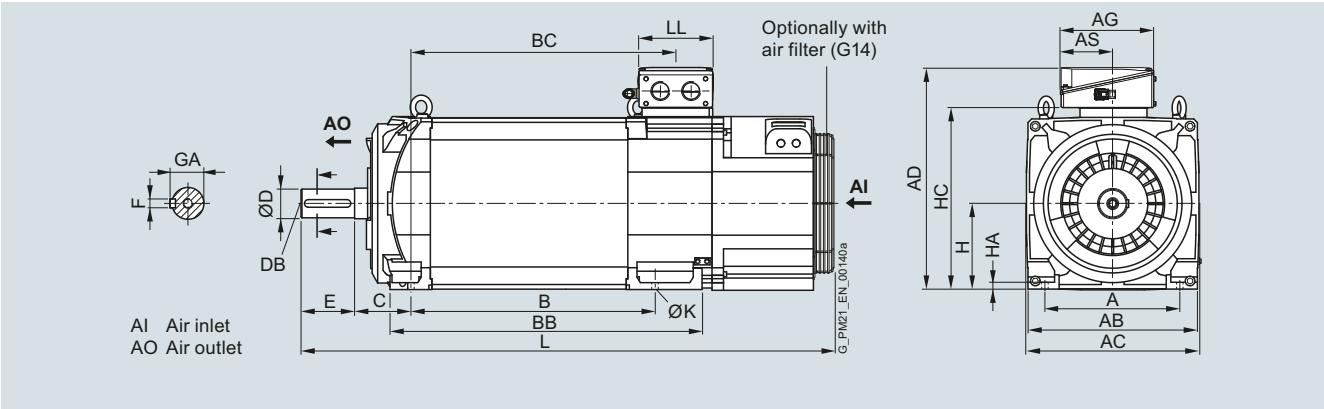

For motor		Dimensions in mm (inches)																
Shaft height	Type	IEC	A	AB	AC	B	BB	C	D	DB	E	F	GA	H	HA	HC	K	L
1PH8 type of construction IM B3, forced ventilation – direction of air flow NDE → DE																		
225	1PH8224		356 (14.02)	446 (17.56)	454 (17.87)	445 (17.52)	625 (24.61)	149 (5.87)	75 (2.95)	M20	140 (5.51)	20 (0.79)	79.5 (3.13)	225 (8.86)	18 (0.71)	475 (18.70)	18.5 (0.73)	1206 (47.48)
	1PH8226					545 (21.46)	725 (28.54)											1306 (51.42)
	1PH8228					635 (25.00)	815 (32.09)											1396 (54.96)

Terminal box		Dimensions in mm (inches)					
Shaft height	Type	IEC	AD	AG	AS	BC	LL
Terminal box type 1XB7 322							
225	1PH8224		582 (22.91)	245 (9.65)	140 (5.51)	481 (18.94)	196 (7.72)
	1PH8226					581 (22.87)	
	1PH8228					671 (26.42)	
Terminal box type 1XB7 422							
225	1PH8224		625 (24.61)	281 (11.06)	176 (6.93)	481 (18.94)	233 (9.17)
	1PH8226					581 (22.87)	
	1PH8228					671 (26.42)	
Terminal box type 1XB7 700							
225	1PH8224		678 (26.69)	297 (11.69)	156 (6.14)	481 (18.94)	310 (12.20)
	1PH8226					581 (22.87)	
	1PH8228					671 (26.42)	

© Siemens 2022

Dimensional drawings

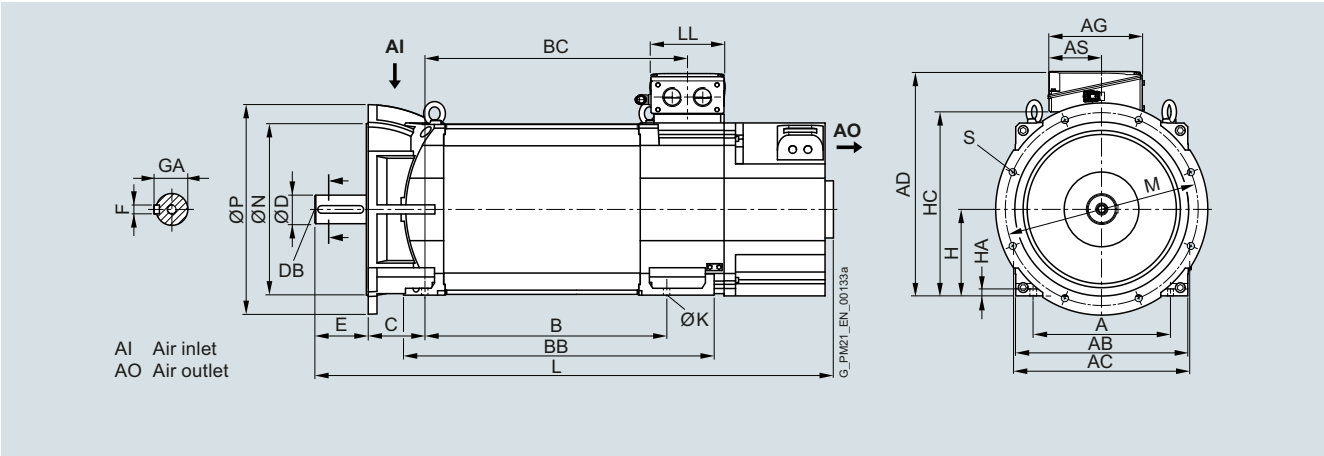

For motor		Dimensions in mm (inches)																				
Shaft height	Type	IEC	A	AB	AC	B	BB	C	D	DB	E	F	GA	H	HA	HC	K	L	M	N	P	S
1PH8 type of construction IM B35, forced ventilation – direction of air flow DE → NDE, flange A550																						
225	1PH8224		356 (14.02)	446 (17.56)	454 (17.87)	445 (17.52)	625 (24.61)	149 (5.87)	75 (2.95)	M20	140 (5.51)	20 (0.79)	79.5 (3.13)	225 (8.86)	18 (0.71)	475 (18.70)	18.5 (0.73)	1171 (46.10)	500 (19.69)	450 (17.72)	550 (21.65)	18.5 (0.73)
	1PH8226					545 (21.46)	725 (28.54)											1271 (50.04)				
	1PH8228					635 (25.00)	815 (32.09)											1361 (53.58)				

Terminal box		Dimensions in mm (inches)					
Shaft height	Type	IEC	AD	AG	AS	BC	LL
Terminal box type 1XB7 322							
225	1PH8224		582 (22.91)	245 (9.65)	140 (5.51)	481 (18.94)	196 (7.72)
	1PH8226					581 (22.87)	
	1PH8228					671 (26.42)	
Terminal box type 1XB7 422							
225	1PH8224		625 (24.61)	281 (11.06)	176 (6.93)	481 (18.94)	233 (9.17)
	1PH8226					581 (22.87)	
	1PH8228					671 (26.42)	
Terminal box type 1XB7 700							
225	1PH8224		678 (26.69)	297 (11.69)	156 (6.14)	481 (18.94)	310 (12.20)
	1PH8226					581 (22.87)	
	1PH8228					671 (26.42)	

© Siemens 2022

Dimensional drawings

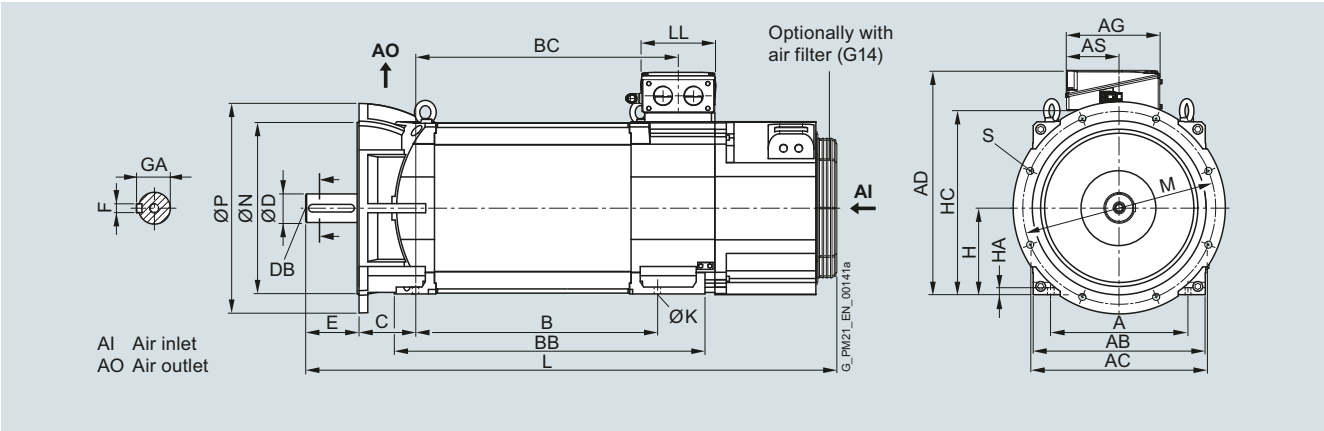

For motor		Dimensions in mm (inches)																				
Shaft height	Type	IEC	A	AB	AC	B	BB	C	D	DB	E	F	GA	H	HA	HC	K	L	M	N	P	S
1PH8 type of construction IM B35, forced ventilation – direction of air flow NDE → DE, flange A550																						
225	1PH8224		356 (14.02)	446 (17.56)	454 (17.87)	445 (17.52)	625 (24.61)	149 (5.87)	75 (2.95)	M20	140 (5.51)	20 (0.79)	79.5 (3.13)	225 (8.86)	18 (0.71)	475 (18.70)	18.5 (0.73)	1206 (47.48)	500 (19.69)	450 (17.72)	550 (21.65)	18.5 (0.73)
	1PH8226					545 (21.46)	725 (28.54)											1306 (51.42)				
	1PH8228					635 (25.00)	815 (32.09)											1396 (54.96)				

Terminal box		Dimensions in mm (inches)					
Shaft height	Type	IEC	AD	AG	AS	BC	LL
Terminal box type 1XB7 322							
225	1PH8224		582 (22.91)	245 (9.65)	140 (5.51)	481 (18.94)	196 (7.72)
	1PH8226					581 (22.87)	
	1PH8228					671 (26.42)	
Terminal box type 1XB7 422							
225	1PH8224		625 (24.61)	281 (11.06)	176 (6.93)	481 (18.94)	233 (9.17)
	1PH8226					581 (22.87)	
	1PH8228					671 (26.42)	
Terminal box type 1XB7 700							
225	1PH8224		678 (26.69)	297 (11.69)	156 (6.14)	481 (18.94)	310 (12.20)
	1PH8226					581 (22.87)	
	1PH8228					671 (26.42)	

© Siemens 2022

Dimensional drawings

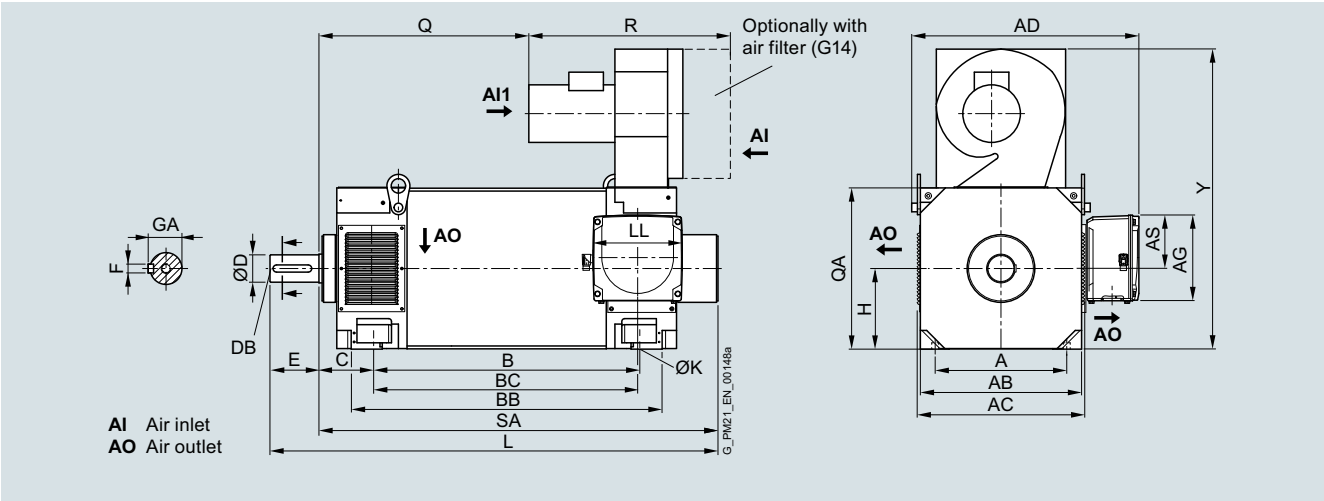

For motor		Dimensions in mm (inches)																			
Shaft height	Type	IEC	A	AB	AC	B	BB	C	D	DB	E	F	GA	H	K	L	Q	QA	R	SA	Y
1PH8 type of construction IM B3, forced ventilation – direction of air flow NDE → DE																					
280	1PH8284		457 (17.99)	560 (22.05)	582 (22.91)	684 (26.93)	840 (33.07)	190 (7.48)	95 (3.74)	M24	170 (6.69)	25 (0.98)	100 (3.94)	280 (11.02)	24 (0.94)	1316 (51.81)	489 (19.25)	560 (22.05)	700 (27.56)	1146 (45.12)	1042 (41.02)
	1PH8286					794 (31.26)	950 (37.40)									1426 (56.14)	599 (23.58)			1256 (49.45)	
	1PH8288					924 (36.38)	1080 (42.52)									1556 (61.26)	729 (28.70)			1386 (54.57)	

Terminal box		Dimensions in mm (inches)					
Shaft height	Type	IEC	AD	AG	AS	BC	LL
Terminal box type 1XB7 700							
280	1PH8284		789 (31.06)	297 (11.69)	186 (7.32)	677 (26.65)	310 (12.20)
	1PH8286					787 (30.98)	
	1PH8288					917 (36.10)	
Terminal box type 1XB7 712							
280	1PH8284		836 (32.91)	371 (14.61)	201 (7.91)	691 (27.20)	370 (14.57)
	1PH8286					801 (31.54)	
	1PH8288					931 (36.65)	

© Siemens 2022

Dimensional drawings

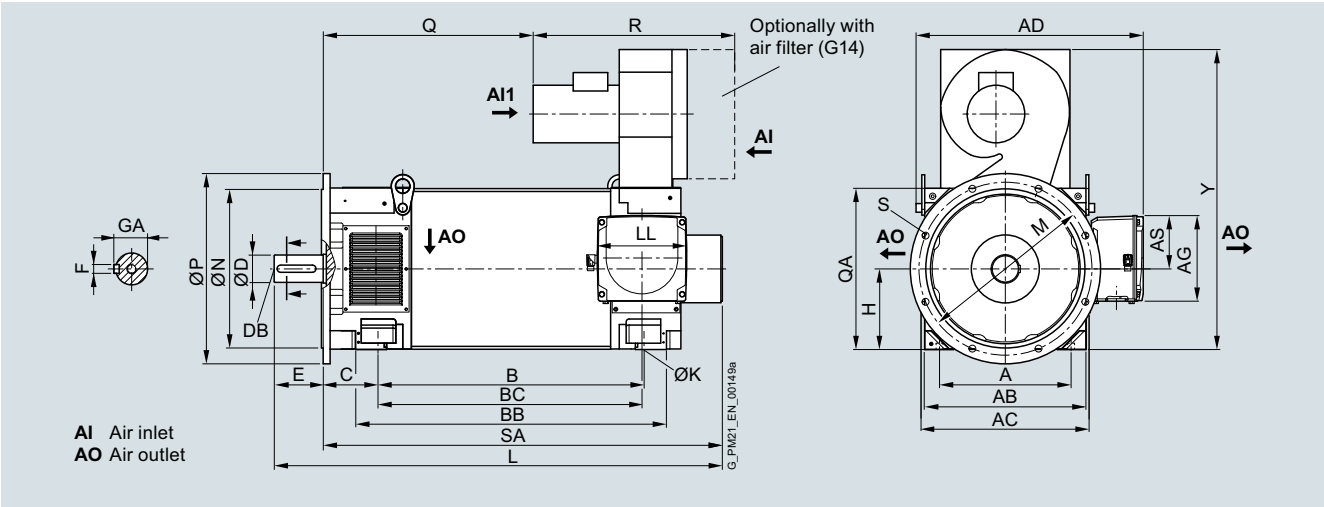

For motor		Dimensions in mm (inches)												
Shaft height	Type	IEC	A	AB	AC	B	BB	C	D	DB	E	F	GA	H
1PH8 type of construction IM B35, forced ventilation – direction of air flow NDE → DE, flange A660														
280	1PH8284		457 (17.99)	560 (22.05)	582 (22.91)	684 (26.93)	840 (33.07)	190 (7.48)	95 (3.74)	M24	170 (6.69)	25 (0.98)	100 (3.94)	280 (11.02)
	1PH8286					794 (31.26)	950 (37.40)							
	1PH8288					924 (36.38)	1080 (42.52)							
			K	L	M	N	P	Q	QA	R	S	SA	Y	
	1PH8284		24 (0.94)	1316 (51.81)	600 (23.62)	550 (21.65)	660 (25.98)	489 (19.25)	560 (22.05)	700 (27.56)	24 (0.94)	1146 (45.12)	1042 (41.02)	
	1PH8286			1426 (56.14)				599 (23.58)				1256 (49.45)		
	1PH8288			1556 (61.26)				729 (28.70)				1386 (54.57)		

Terminal box		Dimensions in mm (inches)					
Shaft height	Type	IEC	AD	AG	AS	BC	LL
Terminal box type 1XB7 700							
280	1PH8284		789 (31.06)	297 (11.69)	186 (7.32)	677 (26.65)	310 (12.20)
	1PH8286					787 (30.98)	
	1PH8288					917 (36.10)	
Terminal box type 1XB7 712							
280	1PH8284		836 (32.91)	371 (14.61)	201 (7.91)	691 (27.20)	370 (14.57)
	1PH8286					801 (31.54)	
	1PH8288					931 (36.65)	

© Siemens 2022

Dimensional drawings

1PH808

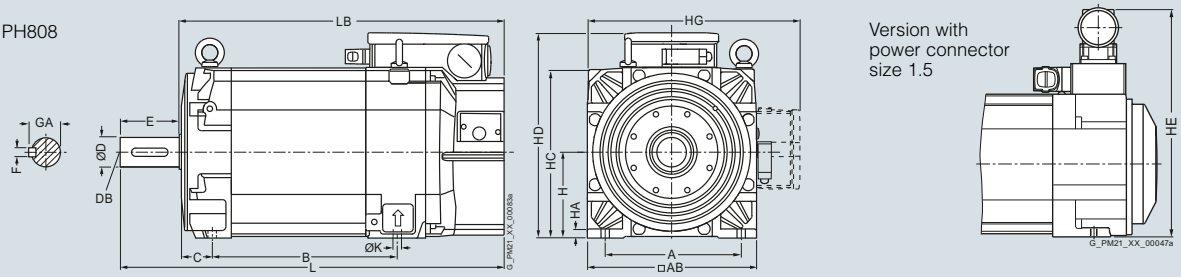

Hollow shaft
1PH808

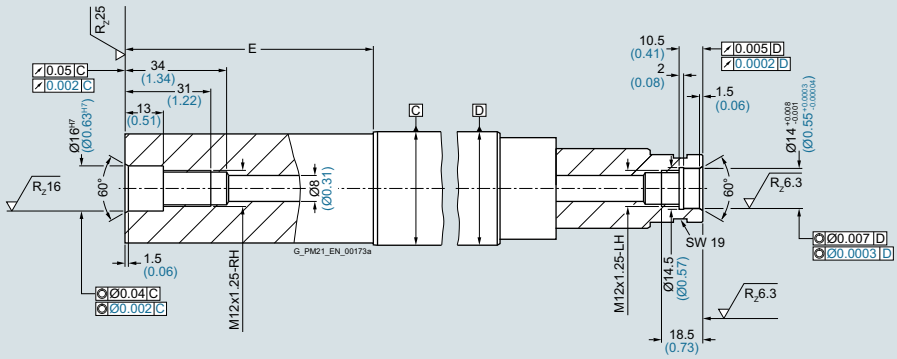

1PH810

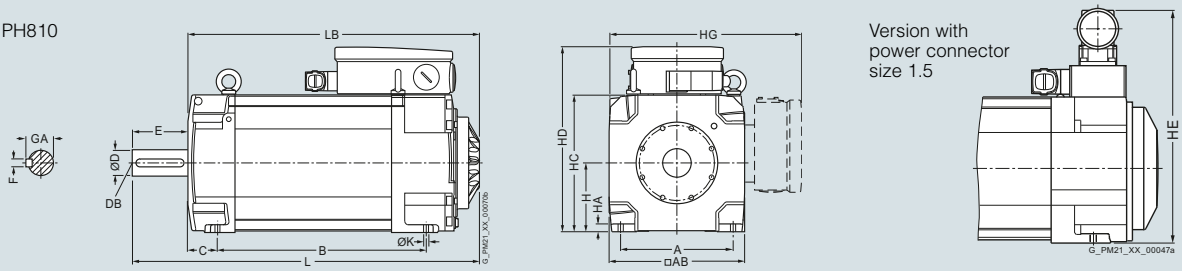

1PH813

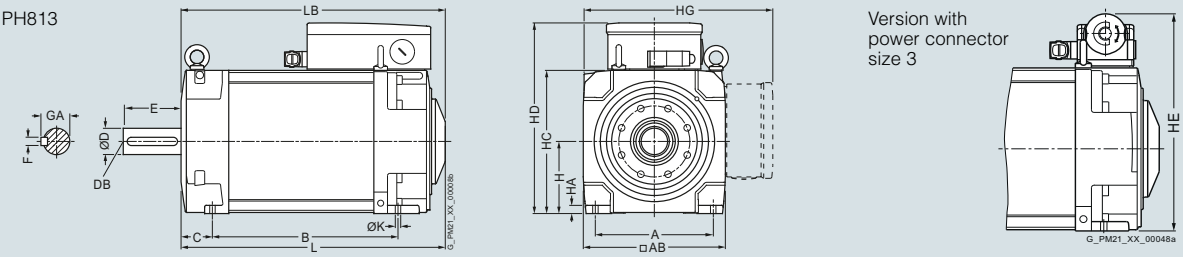

Hollow shaft
1PH810
1PH813

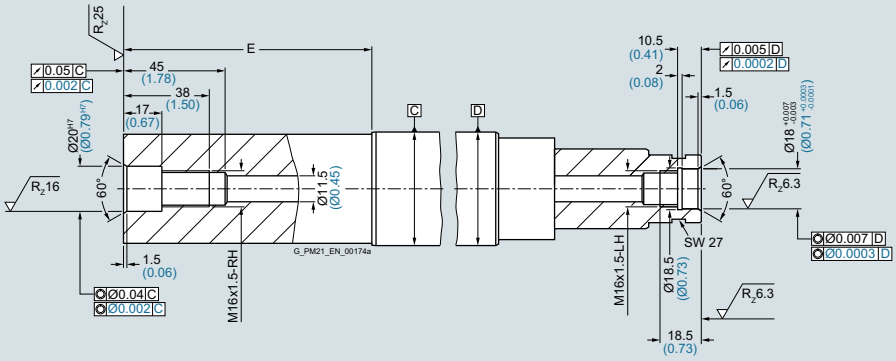

© Siemens 2022

Dimensional drawings

For motor		Dimensions in mm (inches)												
								Standard/ Advanced/ Performance	High Performance/ hollow shaft encoder					
									without hollow shaft	with hollow shaft				
Shaft height	Type	DIN IEC	a B	b A	c HA	f AB	h H	k LB	k LB	k LB	m BA	m_1 –	m_2 –	n AA
1PH8 type of construction IM B3, water cooling														
80	1PH8083		194 (7.64)	125 (4.92)	8 (0.31)	155 (6.10)	80 (3.15)	301.5 (11.87)	306.3 (12.06)	319.3 (12.57)	37 (1.46)	63.5 (2.50)	15 (0.59)	35 (1.38)
	1PH8087		244 (9.61)					351.5 (13.84)	356.3 (14.03)	369.3 (14.54)				
100	1PH8101		167 (6.57)	160 (6.30)	11 (0.43)	196 (7.72)	100 (3.94)	289.5 (11.40)	294.5 (11.59)	312.3 (12.30)	44 (1.73)	68 (2.68)	19 (0.75)	43 (1.69)
	1PH8103		202.5 (7.97)					325 (12.80)	330 (12.99)	347.8 (13.69)				
	1PH8105		262 (10.31)					384.5 (15.14)	389.5 (15.33)	407.3 (16.04)				
	1PH8107		297.5 (11.71)					420 (16.54)	425 (16.73)	442.8 (17.43)				
132	1PH8131		220.5 (8.68)	216 (8.50)	15 (0.59)	260 (10.24)	132 (5.20)	347.5 (13.68)	355 (13.98)	372.8 (14.68)	43 (1.69)	81 (3.19)	13 (0.51)	43 (1.69)
	1PH8133		265.5 (10.45)					392.5 (15.45)	400 (15.75)	417.8 (16.45)				
	1PH8135		310.5 (12.22)					437.5 (17.22)	445 (17.52)	462.8 (18.22)				
	1PH8137		350.5 (13.80)					477.5 (18.80)	485 (19.09)	502.8 (19.80)				
	1PH8138		350.5 (13.80)					477.5 (18.80)	485 (19.09)	502.8 (19.80)				

										Shaft extension DE				
Shaft height	Type	DIN IEC	p HD	p_1 HE	p_2 HC	p_3 HG	s K	s_3 –	w_1 C	**d D**	d_6 DB	t GA	u F	l E
80	1PH8083		216 (8.50)	253.5 (9.98)	–	–	10 (0.39)	M25×1.5	38 (1.50)	**32 (1.26)**	M12	35 (1.38)	10 (0.39)	80 (3.15)
	1PH8087													
100	1PH8101		266.5 (10.49)	294 (11.57)	198 (7.80)	276.5 (10.89)	12 (0.47)	M32×1.5	43 (1.69)	**38 (1.50)**	M12	41 (1.61)	10 (0.39)	80 (3.15)
	1PH8103													
	1PH8105													
	1PH8107													
132	1PH8131		347.5 (13.68)	347 (13.66)	262 (10.31)	357.5 (14.07)	12 (0.47)	M50×1.5	53 (2.09)	**48 (1.89)**	M16	51.5 (2.03)	14 (0.55)	110 (4.33)
	1PH8133													
	1PH8135													
	1PH8137													
	1PH8138													

© Siemens 2022

Dimensional drawings

1PH808

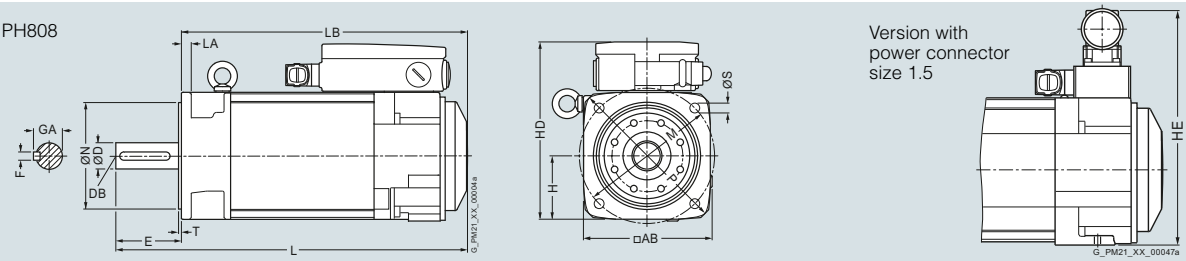

Hollow shaft
1PH808

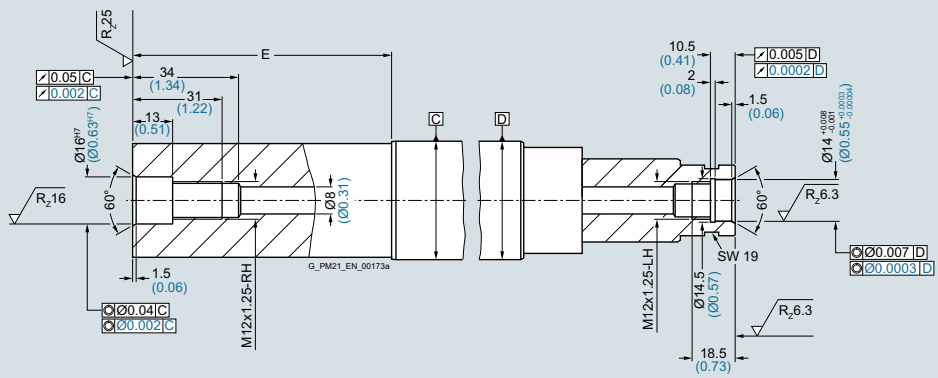

1PH810

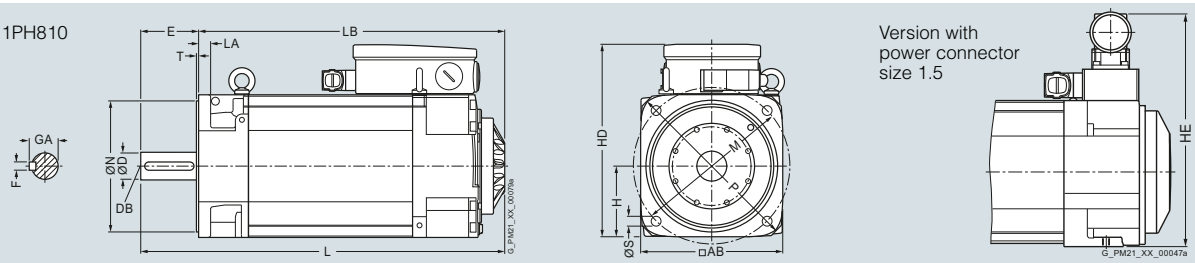

1PH813

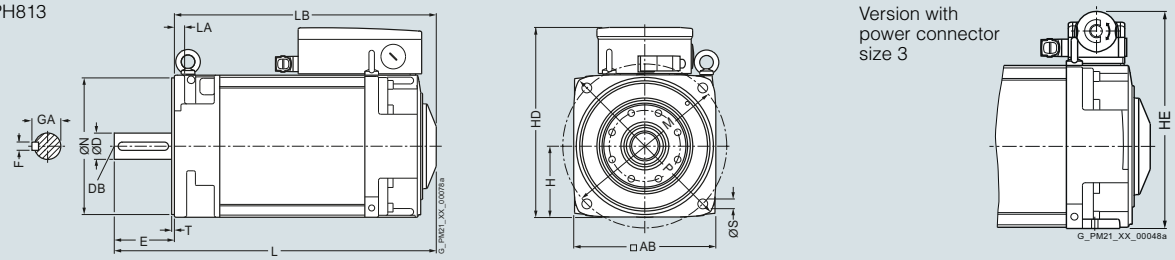

Hollow shaft
1PH810
1PH813

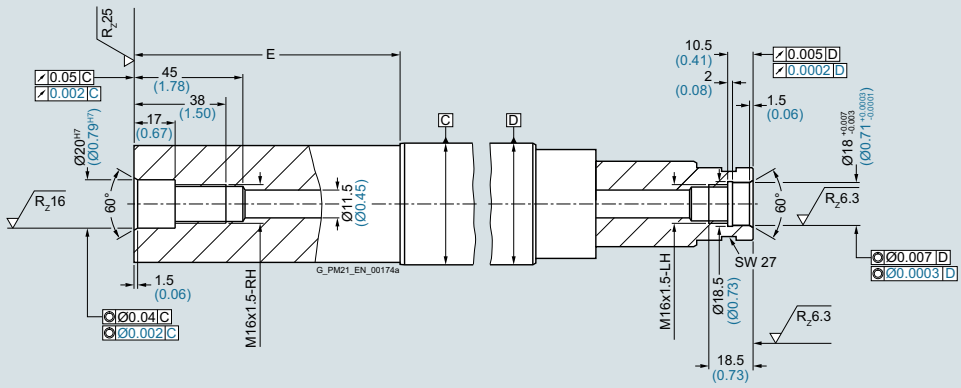

© Siemens 2022

Dimensional drawings

For motor		Dimensions in mm (inches)										
										Standard/ Advanced/ Performance	High Performance/ hollow shaft encoder	
											without hollow shaft	with hollow shaft
Shaft height	Type	DIN IEC	a_1 P	b_1 N	c_1 LA	e_1 M	f AB	f_1 T	h H	k LB	k LB	k LB
1PH8 type of construction IM B5, water cooling												
80	1PH8083		199 (7.83)	130 (5.12)	12 (0.47)	165 (6.50)	155 (6.10)	3.5 (0.14)	77.5 (3.05)	301.5 (11.87)	306.3 (12.06)	319.3 (12.57)
	1PH8087									351.5 (13.84)	356.3 (14.03)	369.3 (14.51)
100	1PH8101		250 (9.84)	180 (7.09)	16 (0.63)	215 (8.46)	196 (7.72)	4 (0.16)	98 (3.86)	289.5 (11.40)	294.5 (11.59)	312.3 (12.30)
	1PH8103									325 (12.80)	330 (12.99)	347.8 (13.69)
	1PH8105									384.5 (15.14)	389.5 (15.33)	407.3 (16.04)
	1PH8107									420 (16.54)	425 (16.73)	442.8 (17.43)
132	1PH8131		340 (13.39)	250 (9.84)	18 (0.71)	300 (11.81)	260 (10.24)	5 (0.20)	130 (5.12)	347.5 (13.68)	355 (13.98)	372.8 (14.68)
	1PH8133									392.5 (15.45)	400 (15.75)	417.8 (16.45)
	1PH8135									437.5 (17.22)	445 (17.52)	462.8 (18.22)
	1PH8137									477.5 (18.80)	485 (19.09)	502.8 (19.80)
	1PH8138									477.5 (18.80)	485 (19.09)	502.8 (19.80)

							Shaft extension DE				
Shaft height	Type	DIN IEC	p HD	– HE	s_2 S	s_3 –	**d D**	d_6 DB	i_2 E	t GA	u F
80	1PH8083		213.5 (8.41)	251 (9.88)	12 (0.47)	M25×1.5	**32 (1.25)**	M12	80 (3.15)	35 (1.38)	10 (0.39)
	1PH8087										
100	1PH8101		264.5 (10.41)	292 (11.50)	14 (0.55)	M32×1.5	**38 (1.50)**	M12	80 (3.15)	41 (1.61)	10 (0.39)
	1PH8103										
	1PH8105										
	1PH8107										
132	1PH8131		345.5 (13.6)	345 (13.58)	18 (0.71)	M50×1.5	**48 (1.89)**	M16	110 (4.33)	51.5 (2.03)	14 (0.55)
	1PH8133										
	1PH8135										
	1PH8137										
	1PH8138										

© Siemens 2022

Dimensional drawings

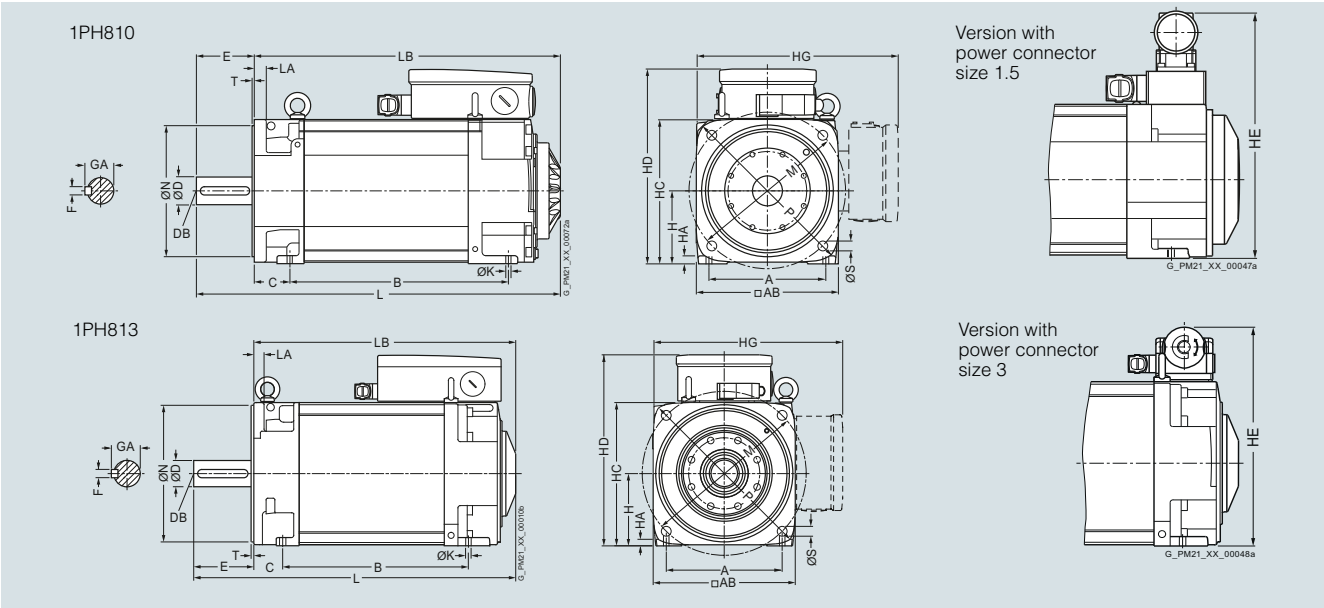

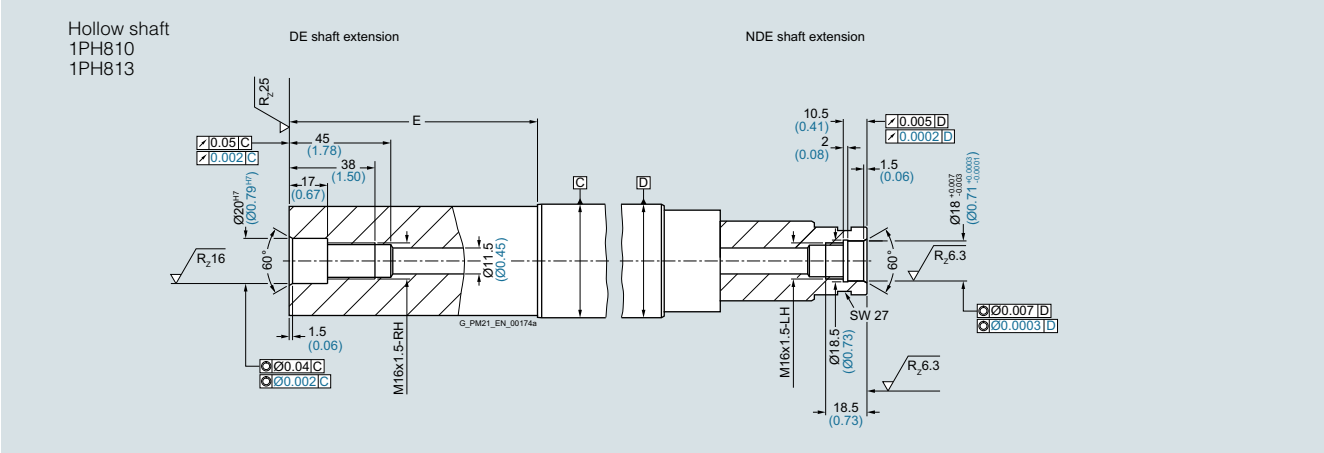

© Siemens 2022

Dimensional drawings

For motor		Dimensions in mm (inches)															
													Standard/ Advanced/ Performance	High Performance			
														without hollow shaft	with hollow shaft		
Shaft height	Type	DIN IEC	a B	a_1 P	b A	b_1 N	c HA	c_1 LA	e_1 M	f AB	f_1 T	h H	k LB	k LB	k LB	m BA
1PH8 type of construction IM B35, water cooling																	
100	1PH8101		167 (6.57)	250 (9.84)	160 (6.30)	180 (7.09)	11 (0.43)	16 (0.63)	215 (8.46)	196 (7.72)	4 (0.16)	100 (3.94)	289.5 (11.40)	294.5 (11.59)	312.3 (12.30)	37 (1.46)
	1PH8103		202.5 (7.97)										325 (12.80)	330 (12.99)	347.8 (13.69)	
	1PH8105		262 (10.31)										384.5 (15.14)	389.5 (15.33)	407.3 (16.04)	
	1PH8107		297.5 (11.71)										420 (16.54)	425 (16.73)	442.8 (17.43)	
132	1PH8131		220.5 (8.68)	340 (13.39)	216 (8.50)	250 (9.84)	15 (0.59)	18 (0.71)	300 (11.81)	260 (10.24)	5 (0.20)	132 (5.20)	347.5 (13.68)	355 (13.98)	372.8 (14.68)	42 (1.65)
	1PH8133		265.5 (10.45)										392.5 (15.45)	400 (15.75)	417.8 (16.45)	
	1PH8135		310.5 (12.22)										437.5 (17.22)	445 (17.52)	462.8 (18.22)	
	1PH8137		350.5 (13.80)										477.5 (18.80)	485 (19.09)	502.8 (19.80)	
	1PH8138		350.5 (13.80)										477.5 (18.80)	485 (19.09)	502.8 (19.80)	

														Shaft extension DE				
Shaft height	Type	DIN IEC	m_1 –	m_2 –	n AA	p HD	– HE	p_2 HC	p_3 HG	s K	s_2 S	s_3 –	w_1 C	**d D**	d_6 DB	i_2 E	t GA	u F
100	1PH8101		68 (2.68)	12 (0.47)	43 (1.69)	266.5 (10.49)	294 (11.57)	198 (7.80)	276.5 (10.89)	12 (0.47)	14 (0.55)	M32×1.5	43 (1.69)	**38 (1.50)**	M12	80 (3.15)	41 (1.61)	10 (0.39)
	1PH8103																	
	1PH8105																	
	1PH8107																	
132	1PH8131		81 (3.19)	12 (0.47)	43 (1.69)	347.5 (13.68)	347 (13.66)	262 (10.31)	357.5 (14.07)	12 (0.47)	18 (0.71)	M50×1.5	53 (2.09)	**48 (1.89)**	M16	110 (4.33)	51.5 (2.03)	14 (0.55)
	1PH8133																	
	1PH8135																	
	1PH8137																	
	1PH8138																	

© Siemens 2022

Dimensional drawings

1PH816

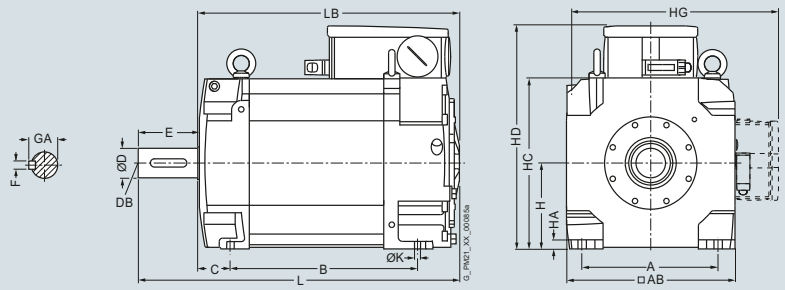

Version with hollow shaft

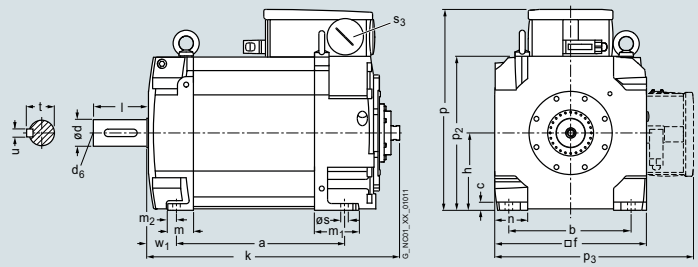

Hollow shaft

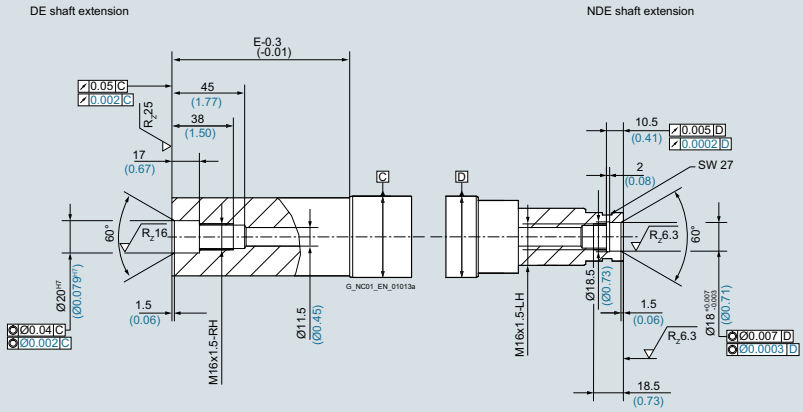

For motor		Dimensions in mm (inches)															
Shaft height	Type	DIN IEC	a B	a_1 P	b A	b_1 N	c HA	c_1 LA	e_1 M	f AB	f_1 T	h H	k LB	m BA	m_1 –	m_2 –	n AA
1PH8 type of construction IM B3, water cooling																	
160	1PH8163		346.5 (13.64)	–	254 (10.00)	–	17 (0.67)	23 (0.91)	–	314 (12.36)	–	160 (6.30)	488.5 (19.23)	53 (2.09)	91 (3.58)	17 (0.67)	70 (2.76)
	1PH8165		406.5 (16.00)										548.5 (21.59)				
	1PH8166																

												Shaft extension DE					Version with hollow shaft
Shaft height	Type	DIN IEC	p HD	p_1 HE	p_2 HC	p_3 HG	s K	s_2 S	s_3 –	s_4 –	w_1 C	**d D**	d_6 DB	l E	t GA	u F	k LB
160	1PH8163		415.5 (16.36)	–	317 (12.48)	412.5 (16.24)	14 (0.55)	–	M63 × 1.5	–	61 (2.40)	**55 (2.17)**	M20	110 (4.33)	59 (2.32)	16 (0.63)	520.8 (20.50)
	1PH8165																580.8 (22.87)
	1PH8166																580.8 (22.87)

© Siemens 2022

Dimensional drawings

1PH816

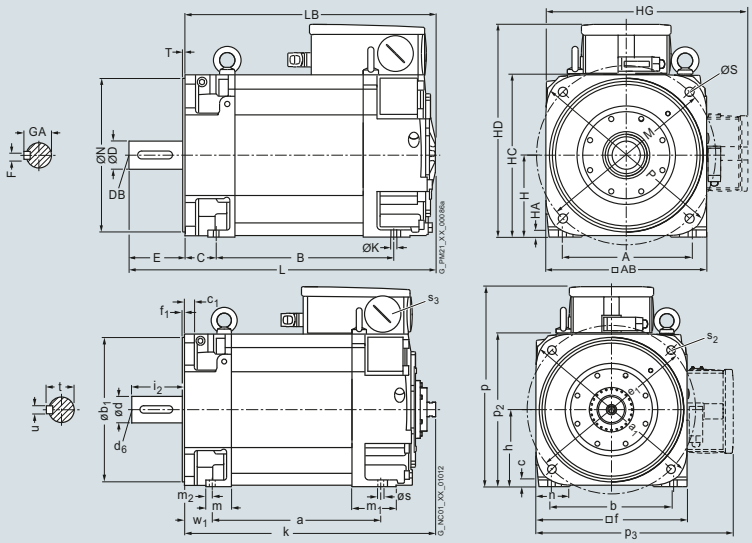

Version with hollow shaft

Hollow shaft

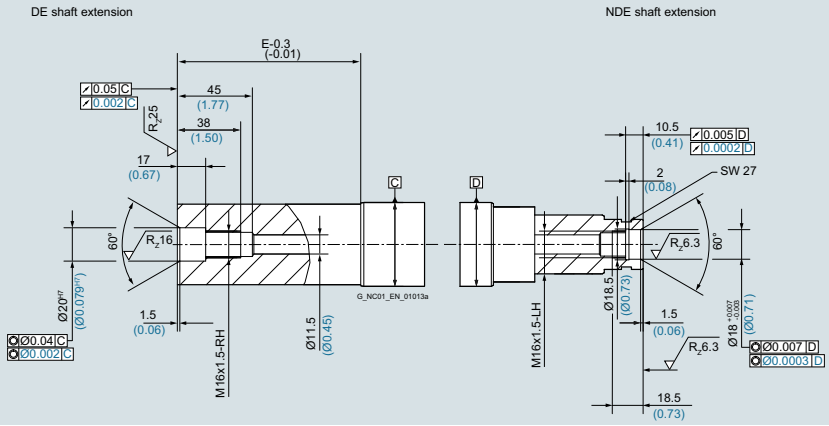

For motor		Dimensions in mm (inches)															
Shaft height	Type	DIN IEC	a B	a_1 P	b A	b_1 N	c HA	c_1 LA	e_1 M	f AB	f_1 T	h Hv	k LB	m BA	m_1 –	m_2 –	n AA
1PH8 type of construction IM B5/IM B35, water cooling																	
160	1PH8163		346.5 (13.64)	393 (15.47)	254 (10.00)	300 (11.81)	17 (0.67)	–	350 (13.78)	314 (12.36)	5 (0.20)	160 (6.30)	488.5 (19.23)	53 (2.09)	91 (3.58)	17 (0.67)	70 (2.76)
	1PH8165		406.5 (16.00)										548.5 (21.59)				
	1PH8166																

												Shaft extension DE					Version with hollow shaft
Shaft height	Type	DIN IEC	p HD	p_1 –	p_2 HC	p_3 HG	s K	s_2 S	s_3 –	s_4 –	w_1 C	**d D**	d_6 DB	i_2 E	t GA	u F	k LB
160	1PH8163		415.5 (16.36)	–	317 (12.48)	412.5 (16.24)	14 (0.55)	18 (0.71)	M63 × 1.5	–	61 (2.40)	**55 (2.17)**	M20	110 (4.33)	59 (2.32)	16 (0.63)	520.8 (20.50)
	1PH8165																580.8 (22.87)
	1PH8166																580.8 (22.87)

© Siemens 2022

Dimensional drawings

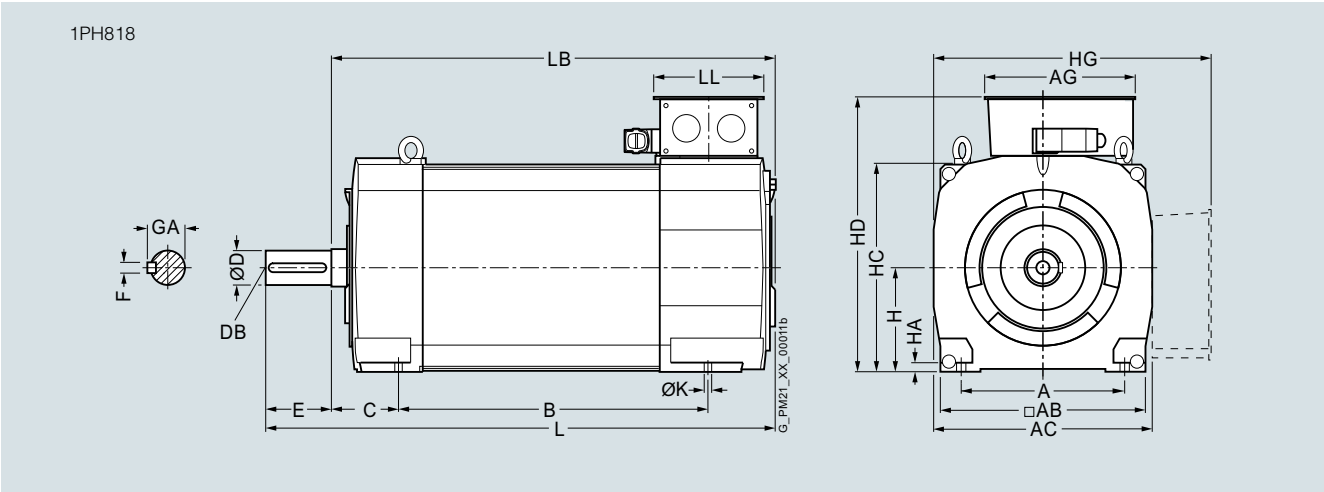

For motor		Dimensions in mm (inches)													
Shaft height	Type	DIN IEC	a B	b A	c HA	f AB	g AC	h H	k LB	m BA	n AA	p_2 HC	s K	w_1 C	
1PH8 types of construction IM B3/IM V5, water cooling															
180	1PH8184		430 (16.93)	279 (10.98)	15 (0.59)	356 (14.02)	384 (15.12)	180 (7.09)	670 (26.38)	138 (5.43)	73 (2.87)	372 (14.65)	14.5 (0.57)	121 (4.76)	
	1PH8186		520 (20.47)						760 (29.92)						

			Shaft extension DE					Terminal box type											
								1XB7322				1XB7422				1XB7700			
Shaft height	Type	DIN IEC	**d D**	d_6 DB	l E	t GA	u F	p HD	p_3 HG	r LL	x_1 AG	p HD	p_3 HG	r LL	x_1 AG	p HD	p_3 HG	r LL	x_1 AG
180	1PH8184		**65m6**	M20	140 (5.51)	69 (2.72)	18 (0.71)	484 (19.06)	485 (19.09)	197 (7.76)	258 (10.16)	539 (21.22)	540 (21.26)	230 (9.06)	303 (11.93)	588 (23.15)	574 (22.60)	310 (12.20)	295 (11.61)
	1PH8186																		

© Siemens 2022

Dimensional drawings

1PH818
D400

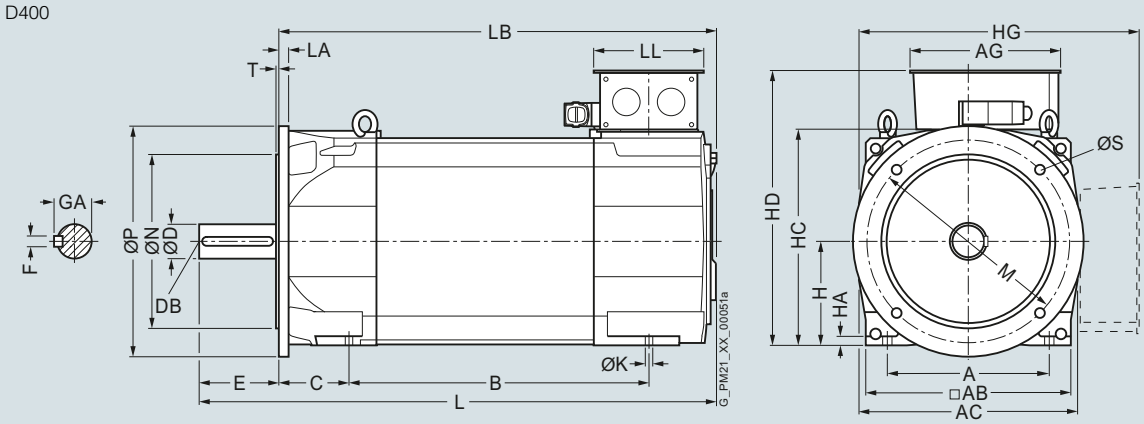

D450

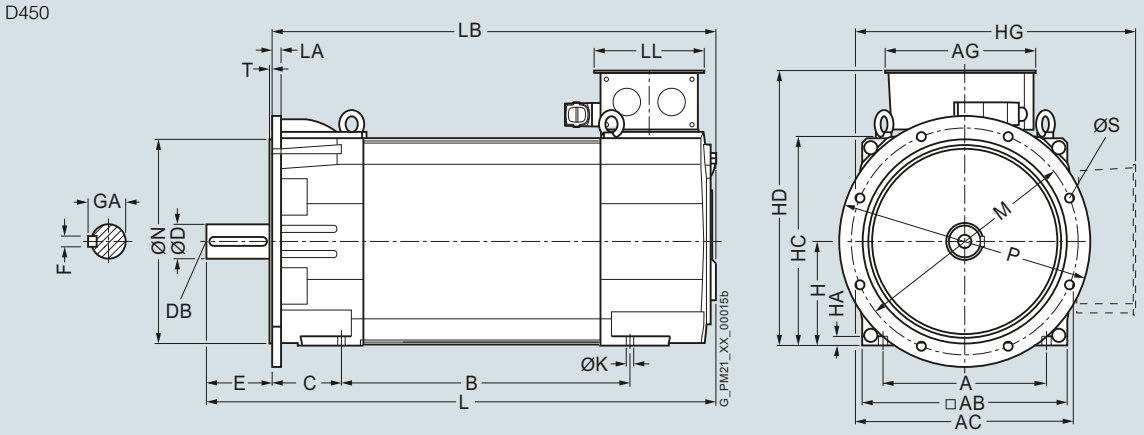

For motor		Dimensions in mm (inches)																	
				D400	D450		D400	D450			D400	D450							
Shaft height	Type	DIN IEC	a B	a_1 P		b A	b_1 N		c HA	c_1 LA	e_1 M		f AB	f_1 T	g AC	h H	k LB	m BA
1PH8 types of construction IM B5/IM B35/IM V15, water cooling																			
180	1PH8184		430 (16.93)	400 (15.75)	450 (17.72)	279 (10.98)	300 (11.81)	350 (13.78)	15 (0.59)	16 (0.63)	350 (13.78)	400 (15.75)	356 (14.02)	5 (0.20)	384 (15.12)	180 (7.09)	670 (26.38)	123 (4.84)
	1PH8186		520 (20.47)														760 (29.92)	

							Shaft extension DE					Terminal box type
												Dimensions as for types of construction IM B3/IM V5
Shaft height	Type	DIN IEC	n AA	p_2 HC	s K	w_1 C	**d D**	d_6 DB	l E	t GA	u F	
180	1PH8184		73 (2.87)	372 (14.65)	14.5 (0.57)	121 (4.76)	**65m6**	M20	140 (5.51)	69 (2.72)	18 (0.71)	
	1PH8186											

© Siemens 2022

Dimensional drawings

1PH822

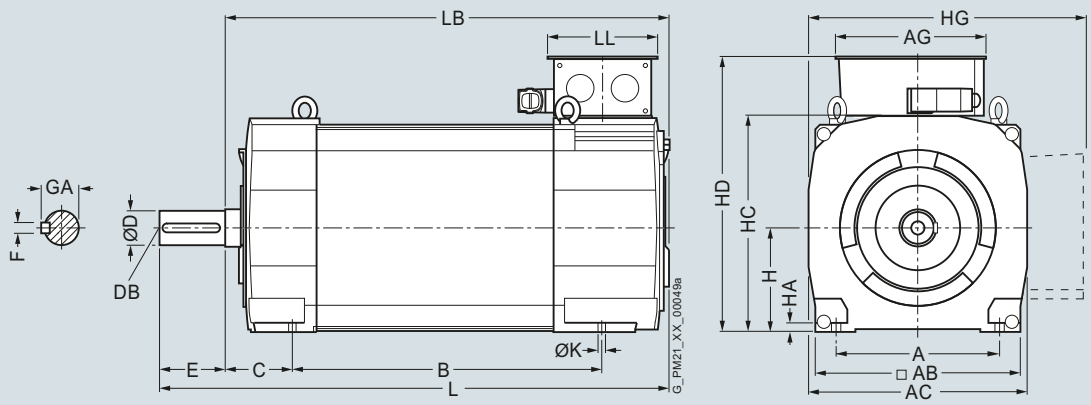

For motor		Dimensions in mm (inches)													
Shaft height	Type	DIN IEC	a B	b A	c HA	f AB	g AC	h H	k LB	m BA	n AA	p_2 HC	s K	w_1 C	
1PH8 types of construction IM B3/IM V5, water cooling															
225	1PH8224		445 (17.52)	356 (14.02)	18 (0.71)	446 (17.56)	474 (18.66)	225 (8.86)	775 (30.51)	154 (6.06)	88 (3.46)	462 (18.19)	18.5 (0.73)	149 (5.87)	
	1PH8226		545 (21.46)						875 (34.45)						
	1PH8228		635 (25.0)						965 (37.99)						

			Shaft extension DE					Terminal box type											
								1XB7322				1XB7422				1XB7700			
Shaft height	Type	DIN IEC	**d D**	d_6 DB	l E	t GA	u F	p HD	p_3 HG	r LL	x_1 AG	p HD	p_3 HG	r LL	x_1 AG	p HD	p_3 HG	r LL	x_1 AG
225	1PH8224		**75m6**	M20	140 (5.51)	79.5 (3.13)	20 (0.79)	579 (22.80)	577 (22.72)	197 (7.76)	258 (10.16)	634 (24.96)	632 (24.88)	230 (9.06)	303 (11.93)	683 (26.89)	666 (26.22)	310 (12.20)	295 (11.61)
	1PH8226																		
	1PH8228																		

© Siemens 2022

Dimensional drawings

1PH822

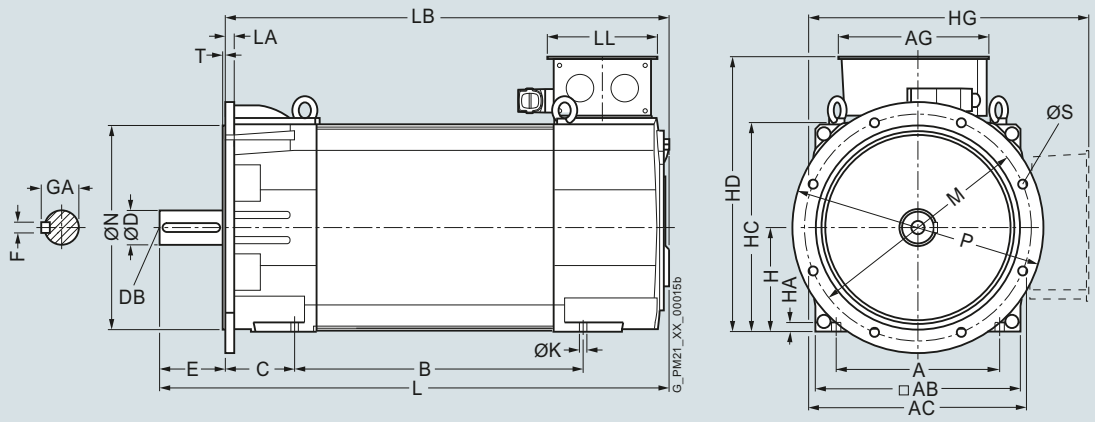

For motor		Dimensions in mm (inches)																	
Shaft height	Type	DIN IEC	a B	a_1 P	b A	b_1 N	c HA	c_1 LA	e_1 M	f AB	f_1 T	g AC	h H	k LB	m BA	n AA	p_2 HC	w_1 C
1PH8 types of construction IM B5/IM B35/IM V15 D550, water cooling																			
225	1PH8224		445 (17.52)	550 (21.65)	356 (14.02)	450 (17.72)	18 (0.71)	20 (0.79)	500 (19.69)	446 (17.56)	5 (0.20)	474 (18.66)	225 (8.86)	770 (30.31)	144 (5.67)	88 (3.46)	462 (18.19)	149 (5.87)
	1PH8226		545 (21.46)											872 (34.33)				
	1PH8228		635 (25.00)											962 (37.87)				

			Shaft extension DE					Terminal box type
								Dimensions as for types of construction IM B3/IM V5
Shaft height	Type	DIN IEC	**d D**	d_6 DB	l E	t GA	u F	
225	1PH8224		**75m6**	M20	140 (5.51)	79.5 (3.13)	20 (0.79)	
	1PH8226							
	1PH8228							

© Siemens 2022

Dimensional drawings

1PH828

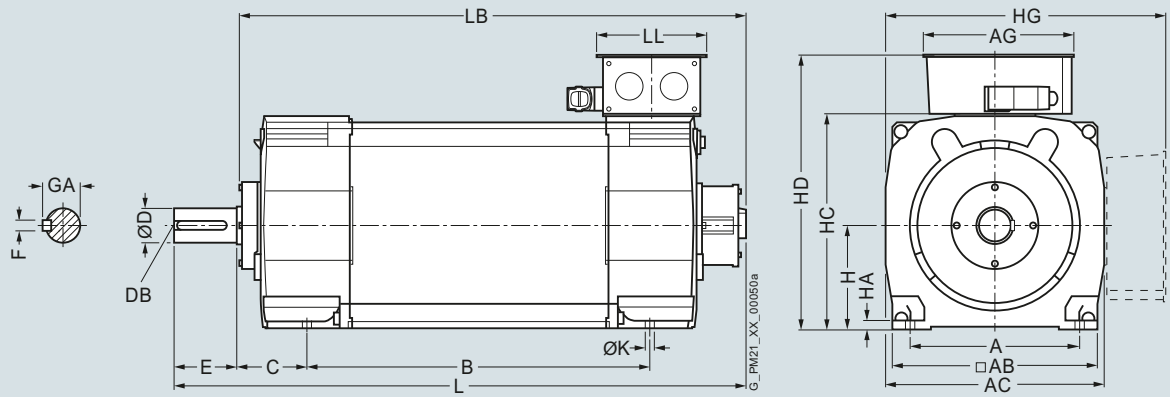

For motor		Dimensions in mm (inches)																	
															Shaft extension DE				
Shaft height	Type	DIN IEC	a B	b A	c LA/HA	f AB	g AC	h H	k LB	m BA	n AA	p_2 HC	s K	w_1 C	**d D**	d_6 DB	l E	t GA	u F
1PH8 types of construction IM B3/IM V5, water cooling																			
280	1PH8284		684 (26.93)	457 (17.99)	21 (0.83)	556 (21.89)	588 (23.15)	280 (11.02)	1134 (44.65)	220 (8.66)	105 (4.13)	574 (22.60)	24 (0.94)	190 (7.48)	**95m6**	M24	170 (6.69)	100 (3.94)	25 (0.98)
	1PH8286		794 (31.26)						1244 (48.98)										
	1PH8288		924 (36.38)						1374 (54.09)										

			Terminal box type																
			1XB7322				1XB7422				1XB7700				1XB7712				
Shaft height	Type	DIN IEC	p HD	p_3 HG	r LL	x_1 AG	p HD	p_3 HG	r LL	x_1 AG	p HD	p_3 HG	r LL	x_1 AG	p HD	p_3 HG	r LL	x_1 AG
280	1PH8284		709 (27.91)	716 (28.19)	197 (7.76)	258 (10.16)	724 (28.5)	731 (28.78)	230 (9.06)	303 (11.93)	770 (30.31)	777 (30.59)	310 (12.2)	318 (12.52)	820 (32.28)	827 (32.56)	377 (14.84)	370 (14.57)
	1PH8286																	
	1PH8288																	

© Siemens 2022

Dimensional drawings

1PH828

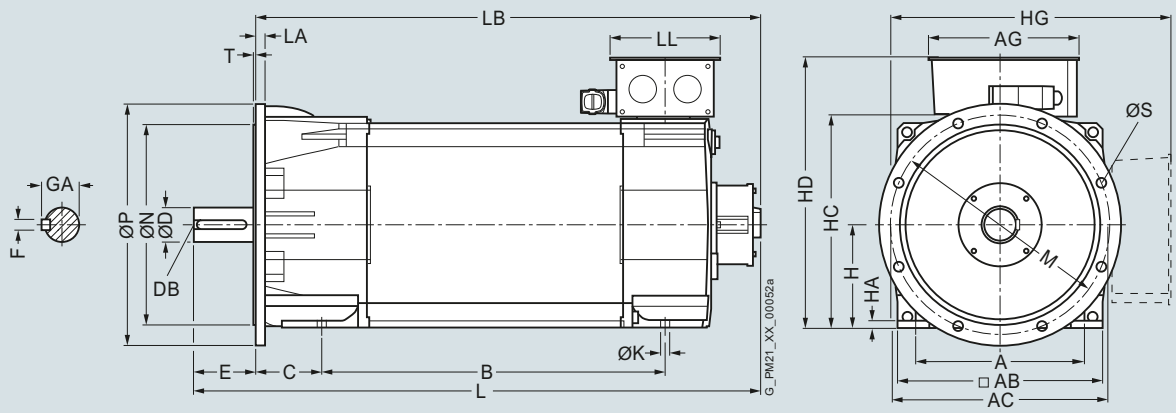

For motor		Dimensions in mm (inches)																		
Shaft height	Type	DIN IEC	a B	a_1 P	b A	b_1 N	c HA	c_1 LA	e_1 M	f AB	f_1 T	g AC	h H	i_2 EB	k LB	m BA	n AA	p_2 HC	s K
1PH8 types of construction IM B5/IM B35/IM V15 D660, water cooling																			
280	1PH8284		684 (26.93)	660 (25.98)	457 (17.99)	550 (21.65)	21 (0.83)	24 (0.94)	600 (23.62)	556 (21.89)	6 (0.24)	588 (23.15)	280 (11.02)	140 (5.51)	1134 (44.65)	220 (8.66)	105 (4.13)	574 (22.60)	24 (0.94)
	1PH8286		794 (31.26)												1244 (48.98)				
	1PH8288		924 (36.38)												1374 (54.09)				

			Shaft extension DE									Terminal box type
												Dimensions as for types of construction IM B3/IM V5
Shaft height	Type	DIN IEC	m BA	n AA	s K	w_1 C	**d D**	d_6 DB	l E	t GA	u F	
280	1PH8284		220 (8.66)	105 (4.13)	24 (0.94)	190 (7.48)	**95m6**	M24	170 (6.69)	100 (3.94)	25 (0.98)	
	1PH8286											
	1PH8288											

© Siemens 2022

Dimensional drawings

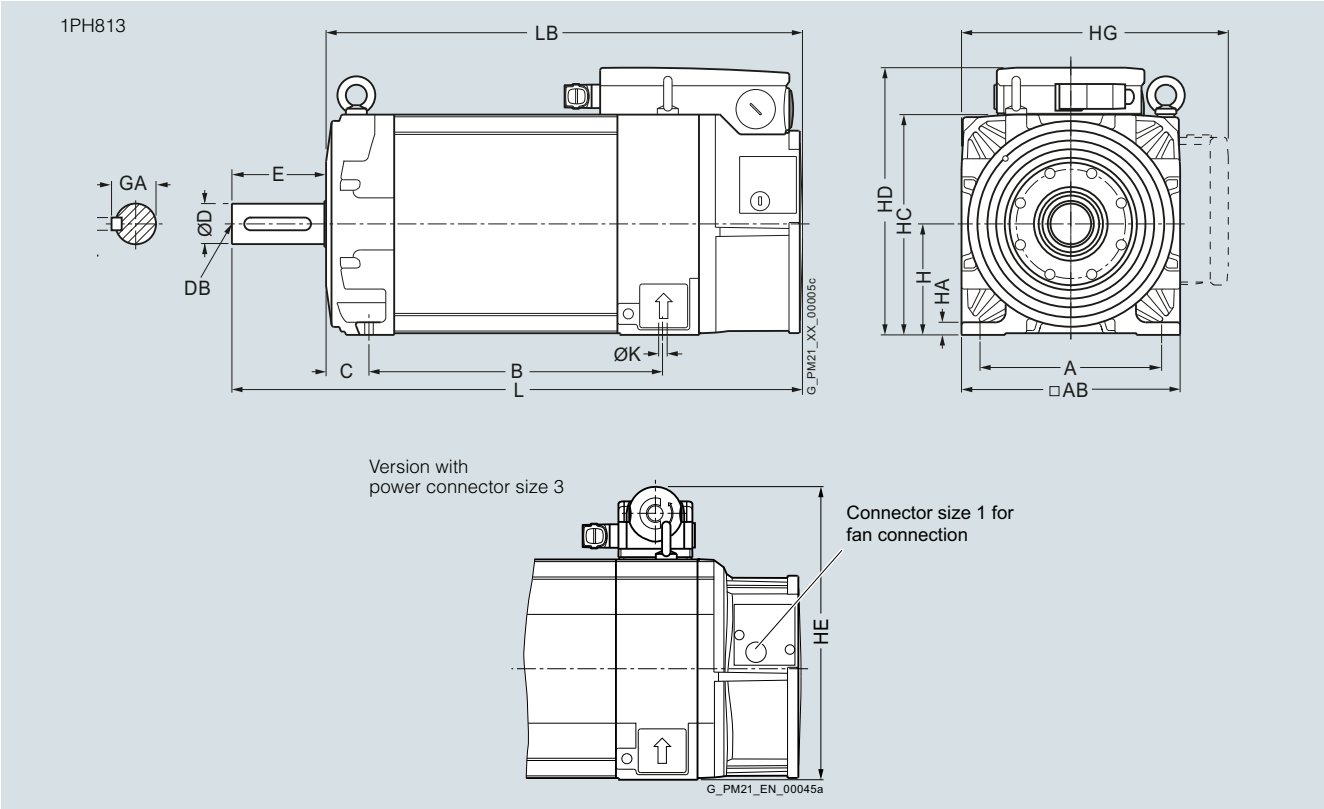

For motor		Dimensions in mm (inches)											
Shaft height	Type	DIN IEC	a B	b A	c HA	c_1 LA	f AB	h H	k LB	m BA	m_1 –	m_2 –	n AA
1PH8 type of construction IM B3, forced ventilation													
132	1PH8131		220.5 (8.68)	216 (8.50)	15 (0.59)	18 (0.71)	260 (10.24)	132 (5.20)	439 (17.28)	57 (2.24)	93 (3.66)	27 (1.06)	52 (2.05)
	1PH8133		265.5 (10.45)						484 (19.06)				
	1PH8135		310.5 (12.22)						529 (20.83)				
	1PH8137		350.5 (13.80)						569 (22.40)				

									Shaft extension DE				
Shaft height	Type	DIN IEC	p HD	– HE	p_2 HC	p_3 HG	s K	w_1 C	**d D**	d_6 DB	l L	t GA	u F
132	1PH8131		317.5 (12.50)	347 (13.66)	262 (10.31)	357.5 (14.07)	12 (0.47)	53 (2.09)	**48 (1.89)**	M16	110 (4.33)	51.5 (2.03)	14 (0.55)
	1PH8133												
	1PH8135												
	1PH8137												

© Siemens 2022

Dimensional drawings

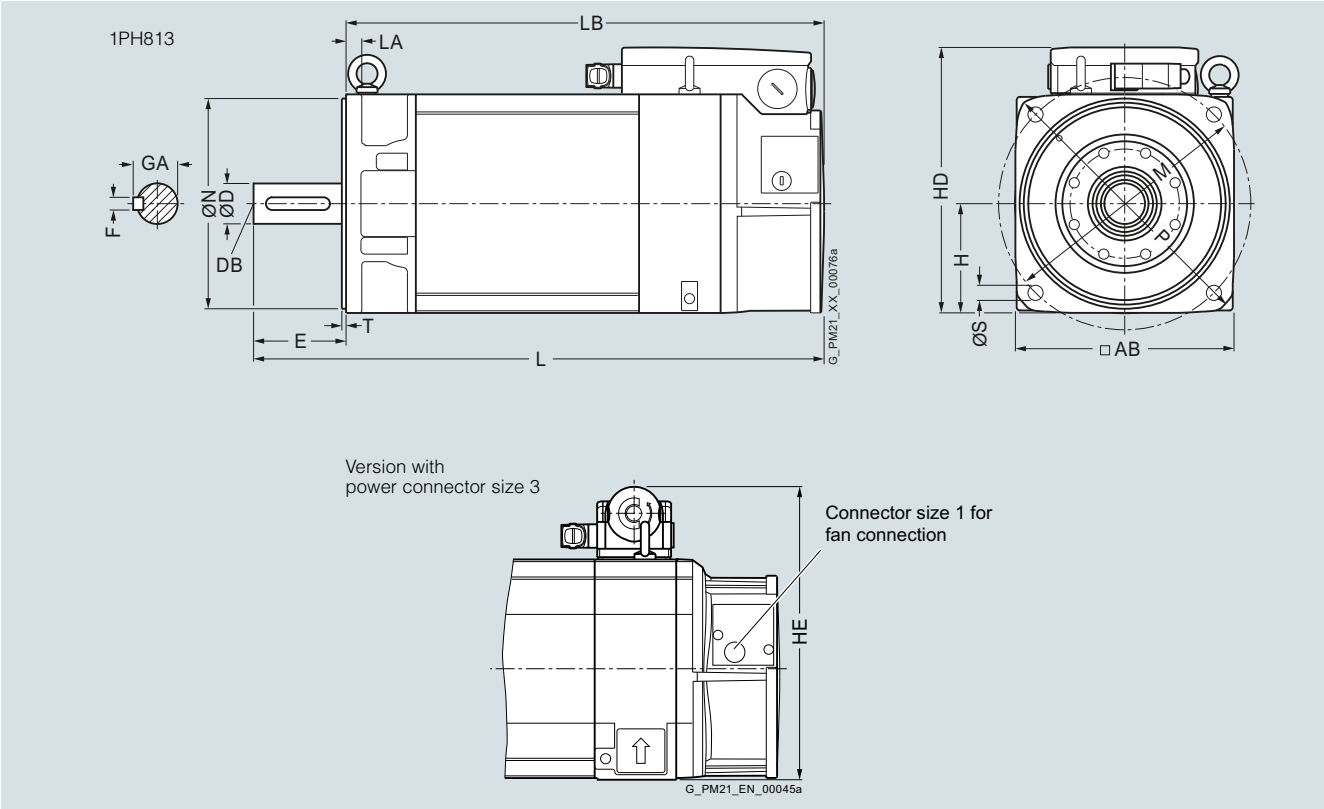

For motor		Dimensions in mm (inches)								
Shaft height	Type	DIN IEC	a_1 P	b_1 N	c_1 LA	e_1 M	f AB	f_1 T	h H	k LB
1PH8 type of construction IM B5, forced ventilation										
132	1PH8131		340 (13.39)	250 (9.84)	18 (0.71)	300 (11.81)	260 (10.24)	5 (0.20)	130 (5.12)	439 (17.28)
	1PH8133									484 (19.06)
	1PH8135									529 (20.83)
	1PH8137									569 (22.40)

						Shaft extension DE				
Shaft height	Type	DIN IEC	p HD	– HE	s_2 S	**d D**	d_6 DB	i_2 E	t GA	u F
132	1PH8131		315.5 (12.42)	345 (13.58)	18 (0.71)	**48 (1.89)**	M16	110 (4.33)	51.5 (2.03)	14 (0.55)
	1PH8133									
	1PH8135									
	1PH8137									

© Siemens 2022

Dimensional drawings

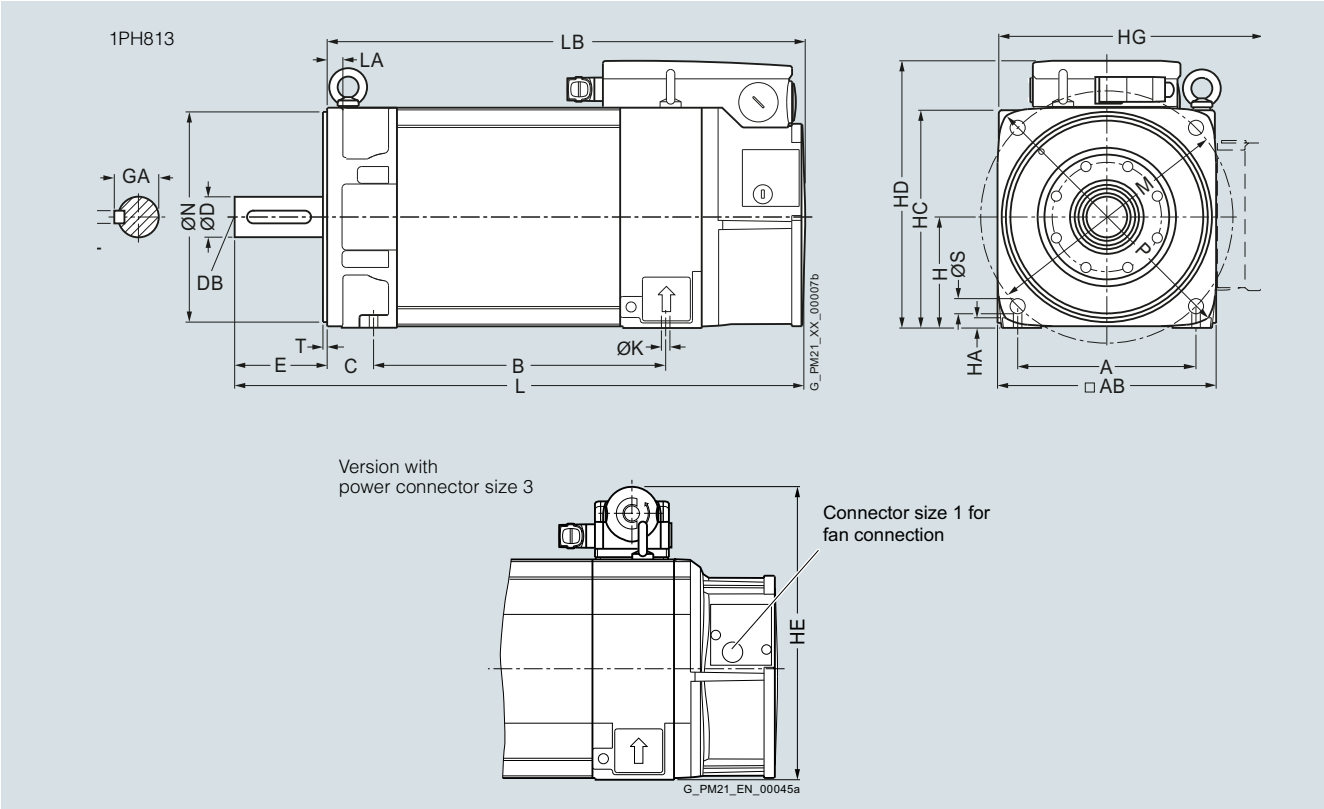

For motor		Dimensions in mm (inches)														
Shaft height	Type	DIN IEC	a B	a_1 P	b A	b_1 N	c HA	e_1 M	f AB	f_1 T	h H	k LB	m BA	m_1 –	m_2 –	n AA
1PH8 type of construction IM B35, forced ventilation																
132	1PH8131		220.5 (8.68)	340 (13.39)	216 (8.50)	250 (9.84)	15 (0.59)	300 (11.81)	260 (10.24)	5 (0.20)	132 (5.20)	439 (17.28)	65 (2.56)	93 (3.66)	35 (1.38)	52 (2.05)
	1PH8133		265.5 (10.45)									484 (19.06)				
	1PH8135		310.5 (12.22)									529 (20.83)				
	1PH8137		350.5 (13.80)									569 (22.40)				

										Shaft extension DE				
Shaft height	Type	DIN IEC	p HD	– HE	p_2 HC	p_3 HG	s K	s_2 S	w_1 C	**d D**	d_6 DB	i_2 E	t GA	u F
132	1PH8131		317.5 (12.42)	347 (13.66)	262 (10.31)	357.5 (14.07)	12 (0.47)	18 (0.71)	53 (2.09)	**48 (1.89)**	M16	110 (4.33)	51.5 (2.03)	14 (0.55)
	1PH8133													
	1PH8135													
	1PH8137													

© Siemens 2022

Dimensional drawings

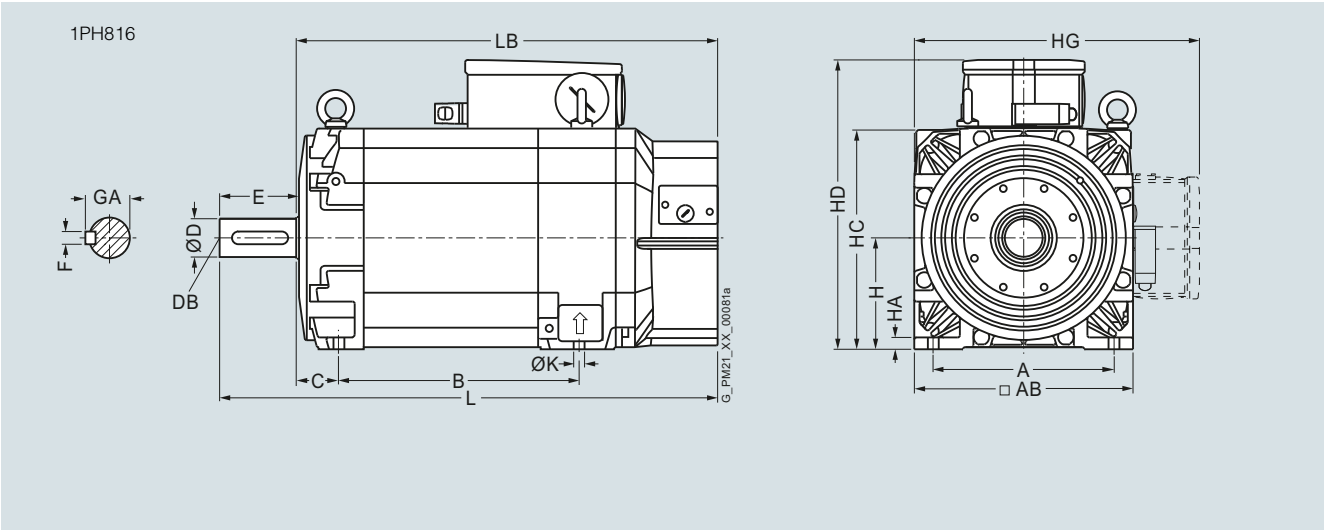

For motor		Dimensions in mm (inches)															
Shaft height	Type	DIN IEC	a B	a_1 P	b A	b_1 N	c HA	c_1 LA	e_1 M	f AB	f_1 T	h H	k LB	m BA	m_1 –	m_2 –	n AA
1PH8 type of construction IM B3, forced ventilation																	
160	1PH8165		406.5 (16.00)	–	254 (10.00)	–	17 (0.67)	23 (0.91)	–	314 (12.36)	–	160 (6.30)	670.5 (26.40)	64 (2.52)	99.5 (3.92)	28 (1.10)	70 (2.76)
	1PH8167		446.5 (17.58)										710.5 (27.97)				

										Shaft extension DE				
Shaft height	Type	DIN IEC	p HD	p_1 HE	p_2 HC	p_3 HG	s K	s_2 S	w_1 C	**d D**	d_6 DB	l L	t GA	u F
160	1PH8165		415.5 (16.36)	–	317 (12.48)	412.5 (16.24)	14 (0.55)	–	61 (2.40)	**55 (2.17)**	M20	110 (4.33)	59 (2.32)	16 (0.63)
	1PH8167													

6

© Siemens 2022

Dimensional drawings

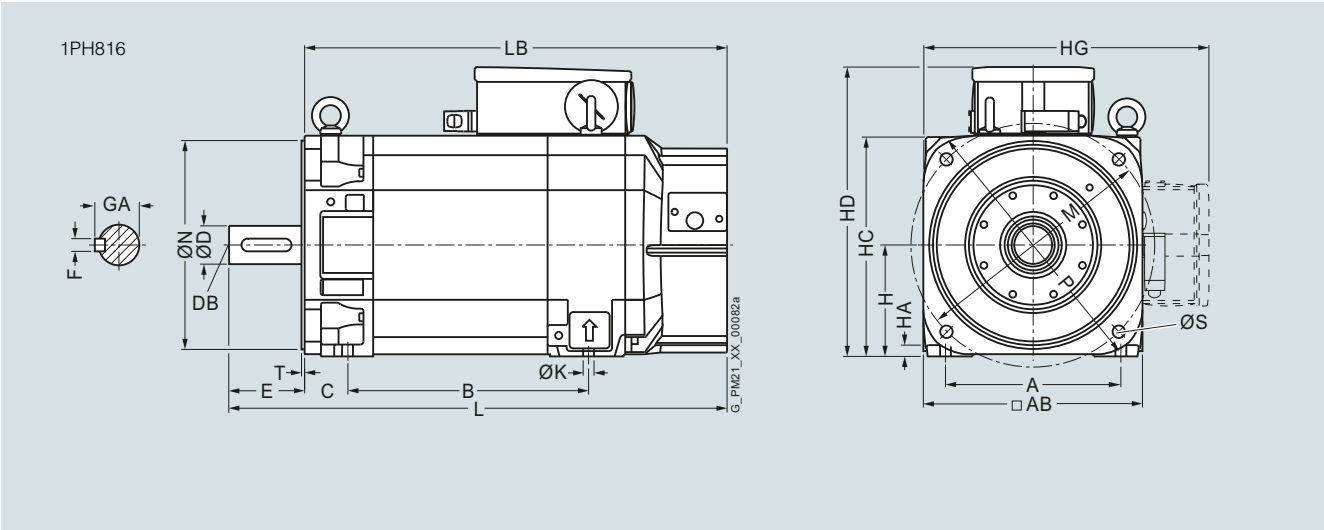

For motor		Dimensions in mm (inches)																
Shaft height	Type	DIN IEC	a B	a_1 P	b A	b_1 N	c HA	c_1 LA	e_1 M	f AB	f_1 T	h H	k LB	m BA	m_1 –	m_2 –	n AA
1PH8 type of construction IM B5/IM B35, forced ventilation																	
160	1PH8165		406.5 (16.00)	393 (15.47)	254 (10.00)	300 (11.81)	17 (0.67)	–	350 (13.78)	314 (12.36)	5 (0.20)	160 (6.30)	670.5 (26.40)	55 (2.17)	99.5 (3.92)	19 (0.75)	70 (2.76)
	1PH8167		446.5 (17.58)										710.5 (27.97)				

										Shaft extension DE				
Shaft height	Type	DIN IEC	p HD	p_1 HE	p_2 HC	p_3 HG	s K	s_2 S	w_1 C	**d D**	d_6 DB	i_2 E	t GA	u F
160	1PH8165		415.5 (16.36)	–	317 (12.48)	412.5 (16.24)	14 (0.55)	18 (0.71)	61 (2.40)	**55 (2.17)**	M20	110 (4.33)	59 (2.32)	16 (0.63)
	1PH8167													

© Siemens 2022

Dimensional drawings

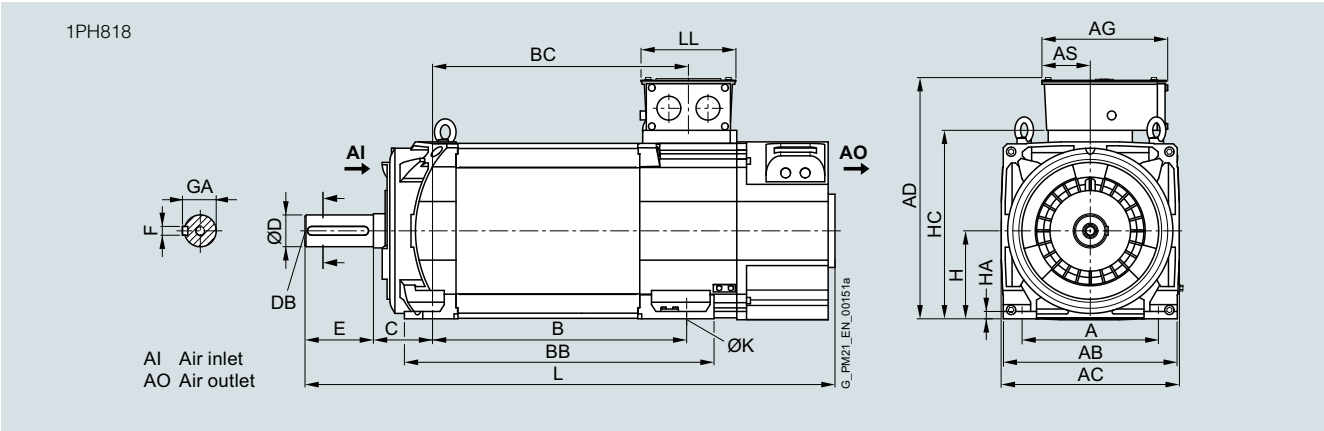

For motor		Dimensions in mm (inches)																
Shaft height	Type	IEC	A	AB	AC	B	BB	C	D	DB	E	F	GA	H	HA	HC	K	L
1PH8 type of construction IM B3, forced ventilation – direction of air flow DE → NDE																		
180	1PH8184		279 (10.98)	356 (14.02)	364 (14.33)	430 (16.93)	545 (21.46)	121 (4.76)	65 (2.56)	M20	140 (5.51)	18 (0.71)	69 (2.72)	180 (7.09)	15 (0.59)	383 (15.08)	14.5 (0.57)	995 (39.17)
	1PH8186					520 (20.47)	635 (25.00)											1085 (42.72)

Terminal box		Dimensions in mm (inches)					
Shaft height	Type	IEC	AD	AG	AS	BC	LL
Terminal box type 1XB7 322							
180	1PH8184		484 (19.06)	258 (10.16)	100 (3.94)	429 (16.89)	197 (7.76)
	1PH8186					519 (20.43)	
Terminal box type 1XB7 422							
180	1PH8184		499 (19.65)	303 (11.93)	120 (4.72)	429 (16.89)	230 (9.06)
	1PH8186					519 (20.43)	
Terminal box type 1XB7 700							
180	1PH8184		525 (20.67)	310 (12.20)	185 (7.28)	429 (16.89)	295 (11.61)
	1PH8186					519 (20.43)	

© Siemens 2022

Dimensional drawings

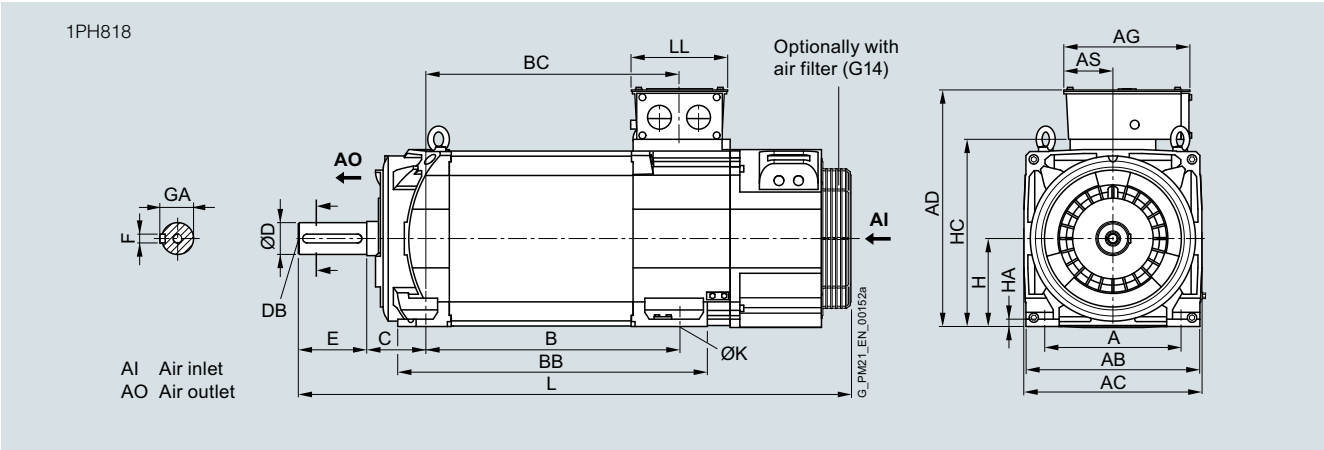

For motor		Dimensions in mm (inches)																
Shaft height	Type	IEC	A	AB	AC	B	BB	C	D	DB	E	F	GA	H	HA	HC	K	L
1PH8 type of construction IM B3, forced ventilation – direction of air flow NDE → DE																		
180	1PH8184		279 (10.98)	356 (14.02)	364 (14.33)	430 (16.93)	545 (21.46)	121 (4.76)	65 (2.56)	M20	140 (5.51)	18 (0.71)	69 (2.72)	180 (7.09)	15 (0.59)	383 (15.08)	14.5 (0.57)	1047 (41.22)
	1PH8186					520 (20.47)	635 (25.00)											1137 (44.76)

Terminal box		Dimensions in mm (inches)					
Shaft height	Type	IEC	AD	AG	AS	BC	LL
Terminal box type 1XB7 322							
180	1PH8184		484 (19.06)	258 (10.16)	100 (3.94)	429 (16.89)	197 (7.76)
	1PH8186					519 (20.43)	
Terminal box type 1XB7 422							
180	1PH8184		499 (19.65)	303 (11.93)	120 (4.72)	429 (16.89)	230 (9.06)
	1PH8186					519 (20.43)	
Terminal box type 1XB7 700							
180	1PH8184		525 (20.67)	310 (12.20)	185 (7.28)	429 (16.89)	295 (11.61)
	1PH8186					519 (20.43)	

© Siemens 2022

Dimensional drawings

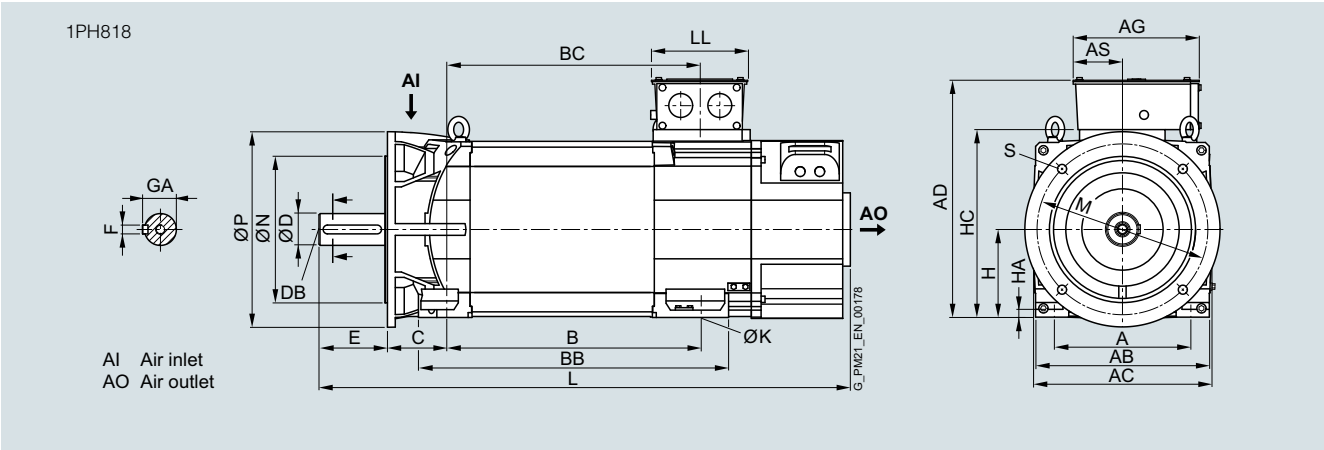

For motor		Dimensions in mm (inches)																				
Shaft height	Type	IEC	A	AB	AC	B	BB	C	D	DB	E	F	GA	H	HA	HC	K	L	M	N	P	S
1PH8 type of construction IM B35, forced ventilation – direction of air flow DE → NDE, flange A400 (option K90)																						
180	1PH8184		279 (10.98)	356 (14.02)	364 (14.33)	430 (16.93)	545 (21.46)	121 (4.76)	65 (2.56)	M20	140 (5.51)	18 (0.71)	69 (2.72)	180 (7.09)	15 (0.59)	383 (15.08)	14.5 (0.57)	995 (39.17)	350 (13.78)	300 (11.81)	400 (15.75)	18.5 (0.73)
	1PH8186					520 (20.47)	635 (25.00)											1085 (42.72)				

Terminal box		Dimensions in mm (inches)					
Shaft height	Type	IEC	AD	AG	AS	BC	LL
Terminal box type 1XB7 322							
180	1PH8184		484 (19.06)	258 (10.16)	100 (3.94)	429 (16.89)	197 (7.76)
	1PH8186					519 (20.43)	
Terminal box type 1XB7 422							
180	1PH8184		499 (19.65)	303 (11.93)	120 (4.72)	429 (16.89)	230 (9.06)
	1PH8186					519 (20.43)	
Terminal box type 1XB7 700							
180	1PH8184		525 (20.67)	310 (12.20)	185 (7.28)	429 (16.89)	295 (11.61)
	1PH8186					519 (20.43)	

© Siemens 2022

Dimensional drawings

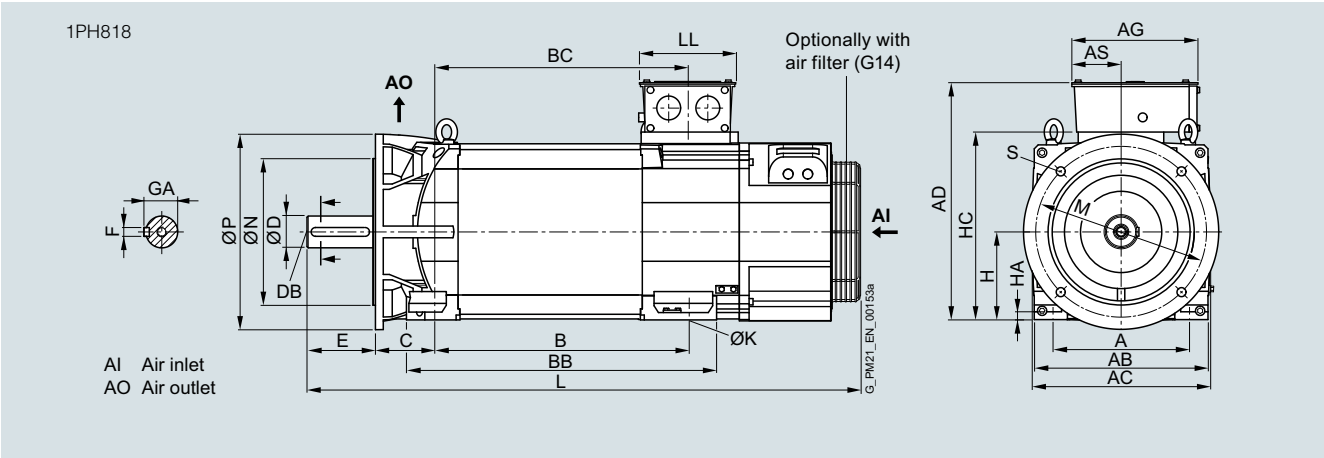

For motor		Dimensions in mm (inches)																				
Shaft height	Type	IEC	A	AB	AC	B	BB	C	D	DB	E	F	GA	H	HA	HC	K	L	M	N	P	S
1PH8 type of construction IM B35, forced ventilation – direction of air flow NDE → DE, flange A400 (option K90)																						
180	1PH8184		279 (10.98)	356 (14.02)	364 (14.33)	430 (16.93)	545 (21.46)	121 (4.76)	65 (2.56)	M20	140 (5.51)	18 (0.71)	69 (2.72)	180 (7.09)	15 (0.59)	383 (15.08)	14.5 (0.57)	1047 (41.22)	350 (13.78)	300 (11.81)	400 (15.75)	18.5 (0.73)
	1PH8186					520 (20.47)	635 (25.00)											1137 (44.76)				

Terminal box		Dimensions in mm (inches)					
Shaft height	Type	IEC	AD	AG	AS	BC	LL
Terminal box type 1XB7 322							
180	1PH8184		484 (19.06)	258 (10.16)	100 (3.94)	429 (16.89)	197 (7.76)
	1PH8186					519 (20.43)	
Terminal box type 1XB7 422							
180	1PH8184		499 (19.65)	303 (11.93)	120 (4.72)	429 (16.89)	230 (9.06)
	1PH8186					519 (20.43)	
Terminal box type 1XB7 700							
180	1PH8184		525 (20.67)	310 (12.20)	185 (7.28)	429 (16.89)	295 (11.61)
	1PH8186					519 (20.43)	

© Siemens 2022

Dimensional drawings

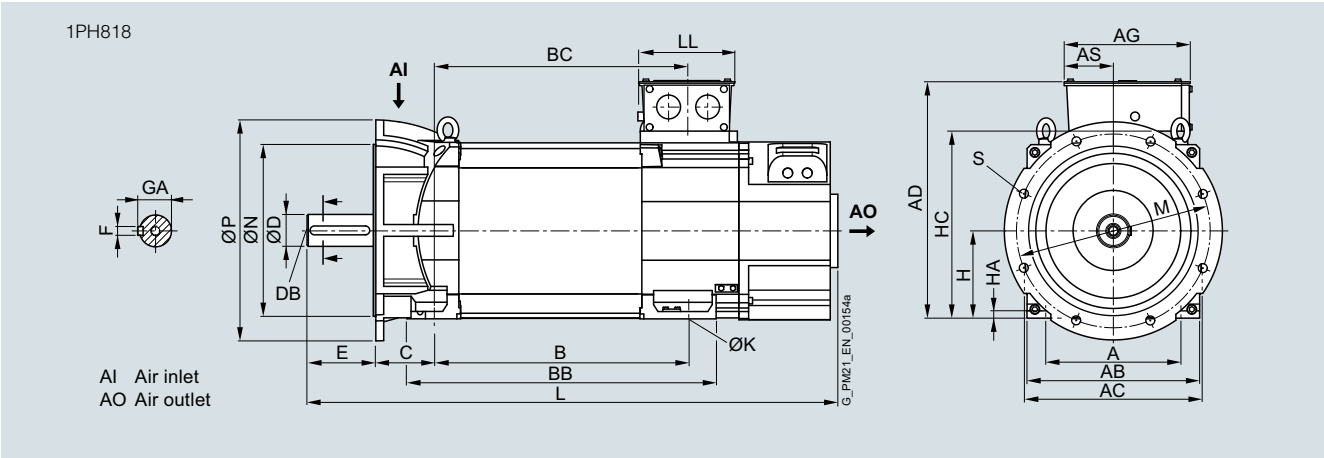

For motor		Dimensions in mm (inches)																				
Shaft height	Type	IEC	A	AB	AC	B	BB	C	D	DB	E	F	GA	H	HA	HC	K	L	M	N	P	S
1PH8 type of construction IM B3, forced ventilation – direction of air flow DE → NDE, A450 flange																						
180	1PH8184		279 (10.98)	356 (14.02)	364 (14.33)	430 (16.93)	545 (21.46)	121 (4.76)	65 (2.56)	M20	140 (5.51)	18 (0.71)	69 (2.72)	180 (7.09)	15 (0.59)	383 (15.08)	14.5 (0.57)	995 (39.17)	400 (15.75)	350 (13.78)	450 (17.72)	18.5 (0.73)
	1PH8186					520 (20.47)	635 (25.00)											1085 (42.72)				

Terminal box		Dimensions in mm (inches)					
Shaft height	Type	IEC	AD	AG	AS	BC	LL
Terminal box type 1XB7 322							
180	1PH8184		484 (19.06)	258 (10.16)	100 (3.94)	429 (16.89)	197 (7.76)
	1PH8186					519 (20.43)	
Terminal box type 1XB7 422							
180	1PH8184		499 (19.65)	303 (11.93)	120 (4.72)	429 (16.89)	230 (9.06)
	1PH8186					519 (20.43)	
Terminal box type 1XB7 700							
180	1PH8184		525 (20.67)	310 (12.20)	185 (7.28)	429 (16.89)	295 (11.61)
	1PH8186					519 (20.43)	

© Siemens 2022

Dimensional drawings

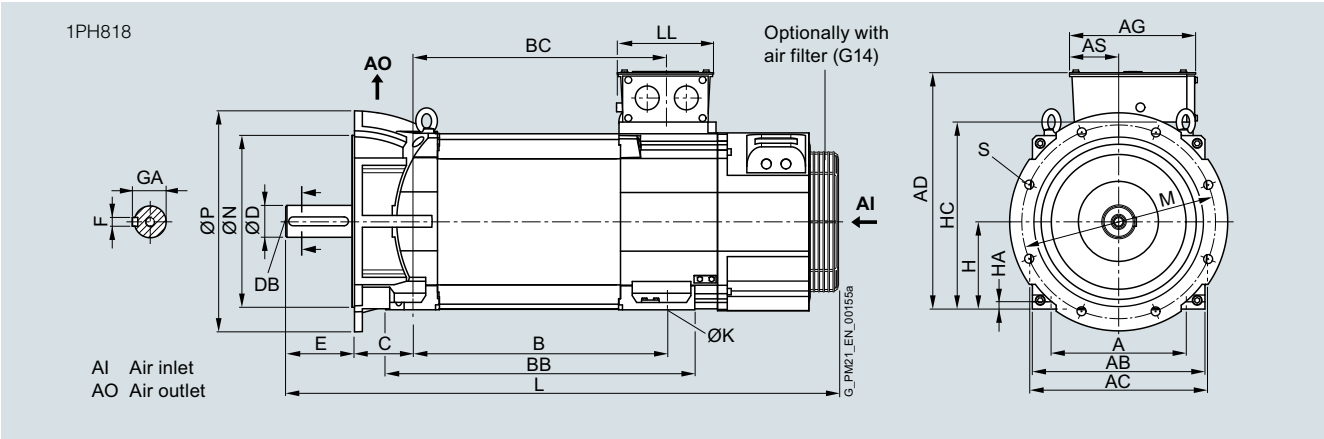

For motor		Dimensions in mm (inches)																				
Shaft height	Type	IEC	A	AB	AC	B	BB	C	D	DB	E	F	GA	H	HA	HC	K	L	M	N	P	S
1PH8 type of construction IM B3, forced ventilation – direction of air flow NDE → DE, A450 flange																						
180	1PH8184		279 (10.98)	356 (14.02)	364 (14.33)	430 (16.93)	545 (21.46)	121 (4.76)	65 (2.56)	M20	140 (5.51)	18 (0.71)	69 (2.72)	180 (7.09)	15 (0.59)	383 (15.08)	14.5 (0.57)	1047 (41.22)	400 (15.75)	350 (13.78)	450 (17.72)	18.5 (0.73)
	1PH8186					520 (20.47)	635 (25.00)											1137 (44.76)				

Terminal box		Dimensions in mm (inches)					
Shaft height	Type	IEC	AD	AG	AS	BC	LL
Terminal box type 1XB7 322							
180	1PH8184		484 (19.06)	258 (10.16)	100 (3.94)	429 (16.89)	197 (7.76)
	1PH8186					519 (20.43)	
Terminal box type 1XB7 422							
180	1PH8184		499 (19.65)	303 (11.93)	120 (4.72)	429 (16.89)	230 (9.06)
	1PH8186					519 (20.43)	
Terminal box type 1XB7 700							
180	1PH8184		525 (20.67)	310 (12.20)	185 (7.28)	429 (16.89)	295 (11.61)
	1PH8186					519 (20.43)	

© Siemens 2022

Dimensional drawings

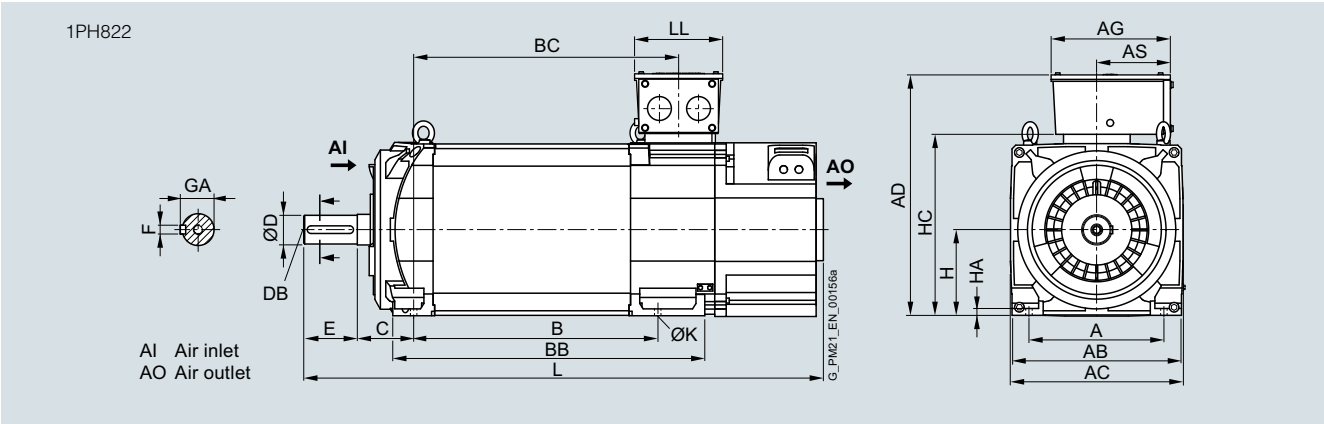

For motor		Dimensions in mm (inches)																
Shaft height	Type	IEC	A	AB	AC	B	BB	C	D	DB	E	F	GA	H	HA	HC	K	L
1PH8 type of construction IM B3, forced ventilation – direction of air flow DE → NDE																		
225	1PH8224		356 (14.02)	446 (17.56)	454 (17.87)	445 (17.52)	625 (24.61)	149 (5.87)	75 (2.95)	M20	140 (5.51)	20 (0.79)	79.5 (3.13)	225 (8.86)	18 (0.71)	475 (18.70)	18.5 (0.73)	1171 (46.10)
	1PH8226					545 (21.46)	725 (28.54)											1271 (50.04)
	1PH8228					635 (25.00)	815 (32.09)											1361 (53.58)

Terminal box		Dimensions in mm (inches)					
Shaft height	Type	IEC	AD	AG	AS	BC	LL
Terminal box type 1XB7 322							
225	1PH8224		613 (24.13)	258 (10.16)	100 (3.94)	481 (18.94)	197 (7.76)
	1PH8226					581 (22.87)	
	1PH8228					671 (26.42)	
Terminal box type 1XB7 422							
225	1PH8224		628 (24.72)	303 (11.93)	120 (4.72)	481 (18.94)	230 (9.06)
	1PH8226					581 (22.87)	
	1PH8228					671 (26.42)	
Terminal box type 1XB7 700							
225	1PH8224		654 (25.75)	295 (11.61)	185 (7.28)	481 (18.94)	310 (12.20)
	1PH8226					581 (22.87)	
	1PH8228					671 (26.42)	

© Siemens 2022

Dimensional drawings

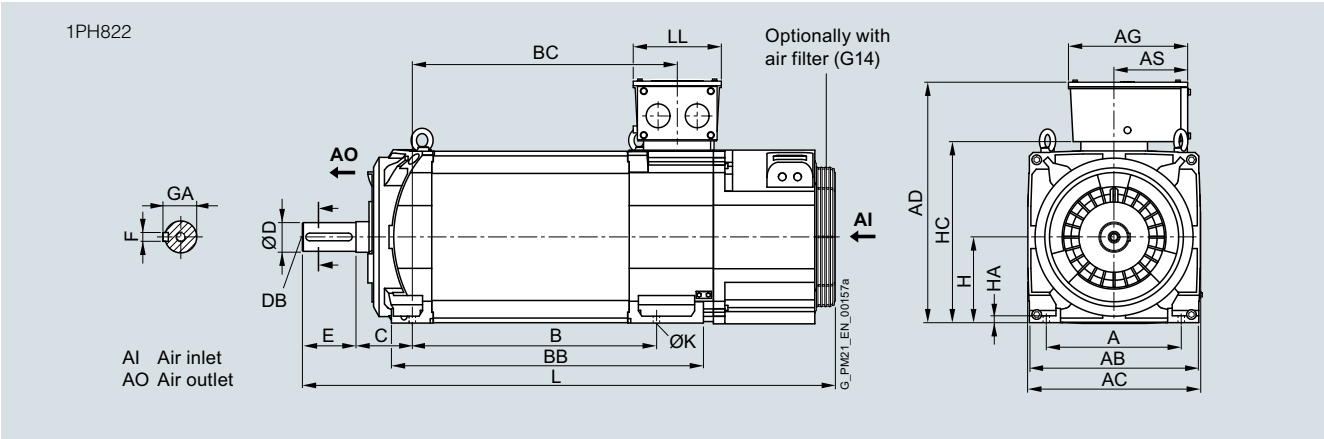

For motor		Dimensions in mm (inches)																
Shaft height	Type	IEC	A	AB	AC	B	BB	C	D	DB	E	F	GA	H	HA	HC	K	L
1PH8 type of construction IM B3, forced ventilation – direction of air flow NDE → DE																		
225	1PH8224		356 (14.02)	446 (17.56)	454 (17.87)	445 (17.52)	625 (24.61)	149 (5.87)	75 (2.95)	M20	140 (5.51)	20 (0.79)	79.5 (3.13)	225 (8.86)	18 (0.71)	475 (18.70)	18.5 (0.73)	1206 (47.48)
	1PH8226					545 (21.46)	725 (28.54)											1306 (51.42)
	1PH8228					635 (25.00)	815 (32.09)											1396 (54.96)

Terminal box		Dimensions in mm (inches)					
Shaft height	Type	IEC	AD	AG	AS	BC	LL
Terminal box type 1XB7 322							
225	1PH8224		613 (24.13)	258 (10.16)	100 (3.94)	481 (18.94)	197 (7.76)
	1PH8226					581 (22.87)	
	1PH8228					671 (26.42)	
Terminal box type 1XB7 422							
225	1PH8224		628 (24.72)	303 (11.93)	120 (4.72)	481 (18.94)	230 (9.06)
	1PH8226					581 (22.87)	
	1PH8228					671 (26.42)	
Terminal box type 1XB7 700							
225	1PH8224		654 (25.75)	295 (11.61)	185 (7.28)	481 (18.94)	310 (12.20)
	1PH8226					581 (22.87)	
	1PH8228					671 (26.42)	

© Siemens 2022

Dimensional drawings

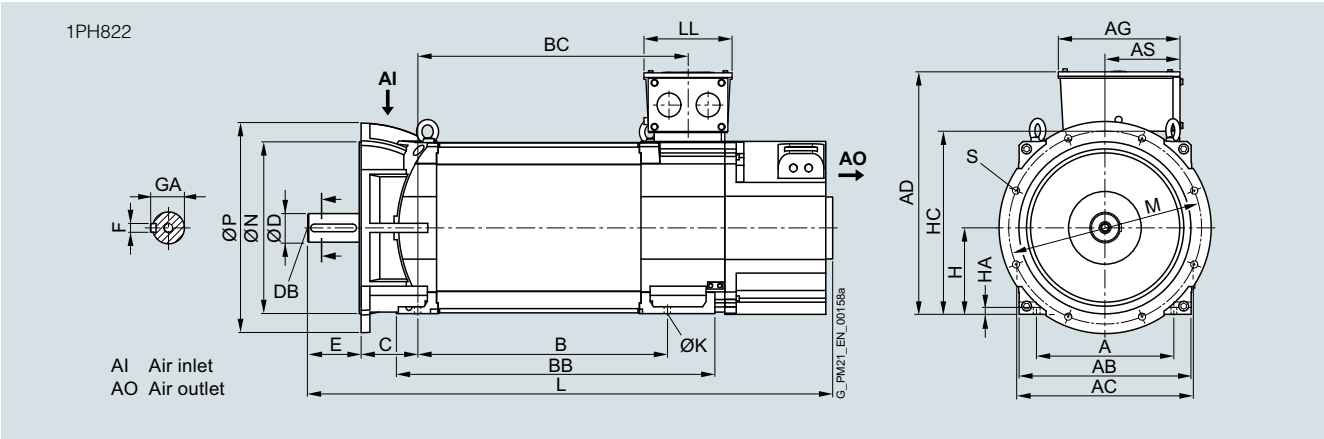

For motor		Dimensions in mm (inches)																				
Shaft height	Type	IEC	A	AB	AC	B	BB	C	D	DB	E	F	GA	H	HA	HC	K	L	M	N	P	S
1PH8 type of construction IM B35, forced ventilation – direction of air flow DE → NDE, A550 flange																						
225	1PH8224		356 (14.02)	446 (17.56)	454 (17.87)	445 (17.52)	625 (24.61)	149 (5.87)	75 (2.95)	M20	140 (5.51)	20 (0.79)	79.5 (3.13)	225 (8.86)	18 (0.71)	475 (18.70)	18.5 (0.73)	1171 (46.10)	500 (19.69)	450 (17.72)	550 (21.65)	18.5 (0.73)
	1PH8226					545 (21.46)	725 (28.54)											1271 (50.04)				
	1PH8228					635 (25.00)	815 (32.09)											1361 (53.58)				

Terminal box		Dimensions in mm (inches)					
Shaft height	Type	IEC	AD	AG	AS	BC	LL
Terminal box type 1XB7 322							
225	1PH8224		613 (24.13)	258 (10.16)	100 (3.94)	481 (18.94)	197 (7.76)
	1PH8226					581 (22.87)	
	1PH8228					671 (26.42)	
Terminal box type 1XB7 422							
225	1PH8224		628 (24.72)	303 (11.93)	120 (4.72)	481 (18.94)	230 (9.06)
	1PH8226					581 (22.87)	
	1PH8228					671 (26.42)	
Terminal box type 1XB7 700							
225	1PH8224		654 (25.75)	295 (11.61)	185 (7.28)	481 (18.94)	310 (12.20)
	1PH8226					581 (22.87)	
	1PH8228					671 (26.42)	

© Siemens 2022

Dimensional drawings

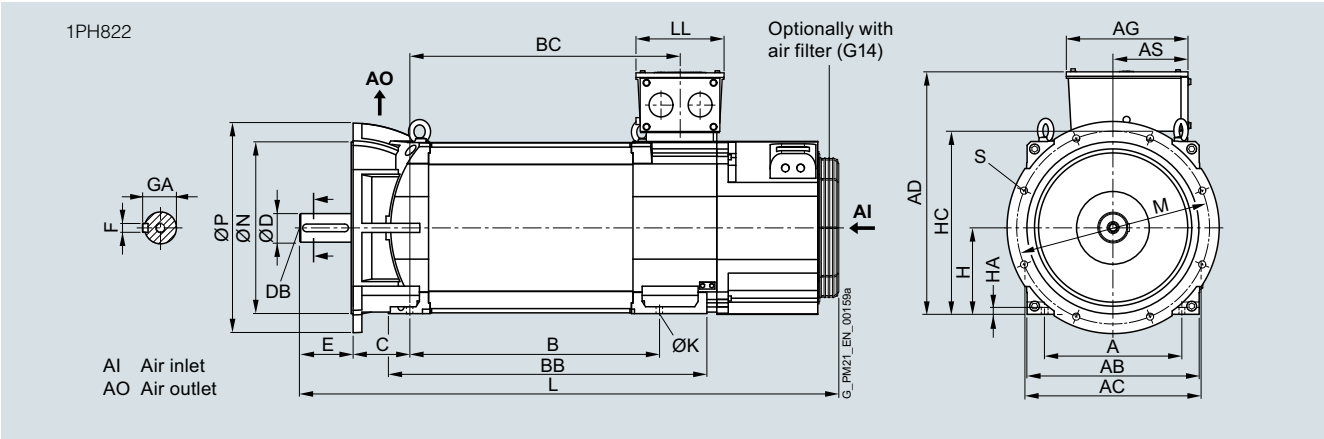

For motor		Dimensions in mm (inches)																				
Shaft height	Type	IEC	A	AB	AC	B	BB	C	D	DB	E	F	GA	H	HA	HC	K	L	M	N	P	S
1PH8 type of construction IM B35, forced ventilation – direction of air flow NDE → DE, A550 flange																						
225	1PH8224		356 (14.02)	446 (17.56)	454 (17.87)	445 (17.52)	625 (24.61)	149 (5.87)	75 (2.95)	M20	140 (5.51)	20 (0.79)	79.5 (3.13)	225 (8.86)	18 (0.71)	475 (18.70)	18.5 (0.73)	1206 (47.48)	500 (19.69)	450 (17.72)	550 (21.65)	18.5 (0.73)
	1PH8226					545 (21.46)	725 (28.54)											1306 (51.42)				
	1PH8228					635 (25.00)	815 (32.09)											1396 (54.96)				

Terminal box		Dimensions in mm (inches)					
Shaft height	Type	IEC	AD	AG	AS	BC	LL
Terminal box type 1XB7 322							
225	1PH8224		613 (24.13)	258 (10.16)	100 (3.94)	481 (18.94)	197 (7.76)
	1PH8226					581 (22.87)	
	1PH8228					671 (26.42)	
Terminal box type 1XB7 422							
225	1PH8224		628 (24.72)	303 (11.93)	120 (4.72)	481 (18.94)	230 (9.06)
	1PH8226					581 (22.87)	
	1PH8228					671 (26.42)	
Terminal box type 1XB7 700							
225	1PH8224		654 (25.75)	295 (11.61)	185 (7.28)	481 (18.94)	310 (12.20)
	1PH8226					581 (22.87)	
	1PH8228					671 (26.42)	

© Siemens 2022

Dimensional drawings

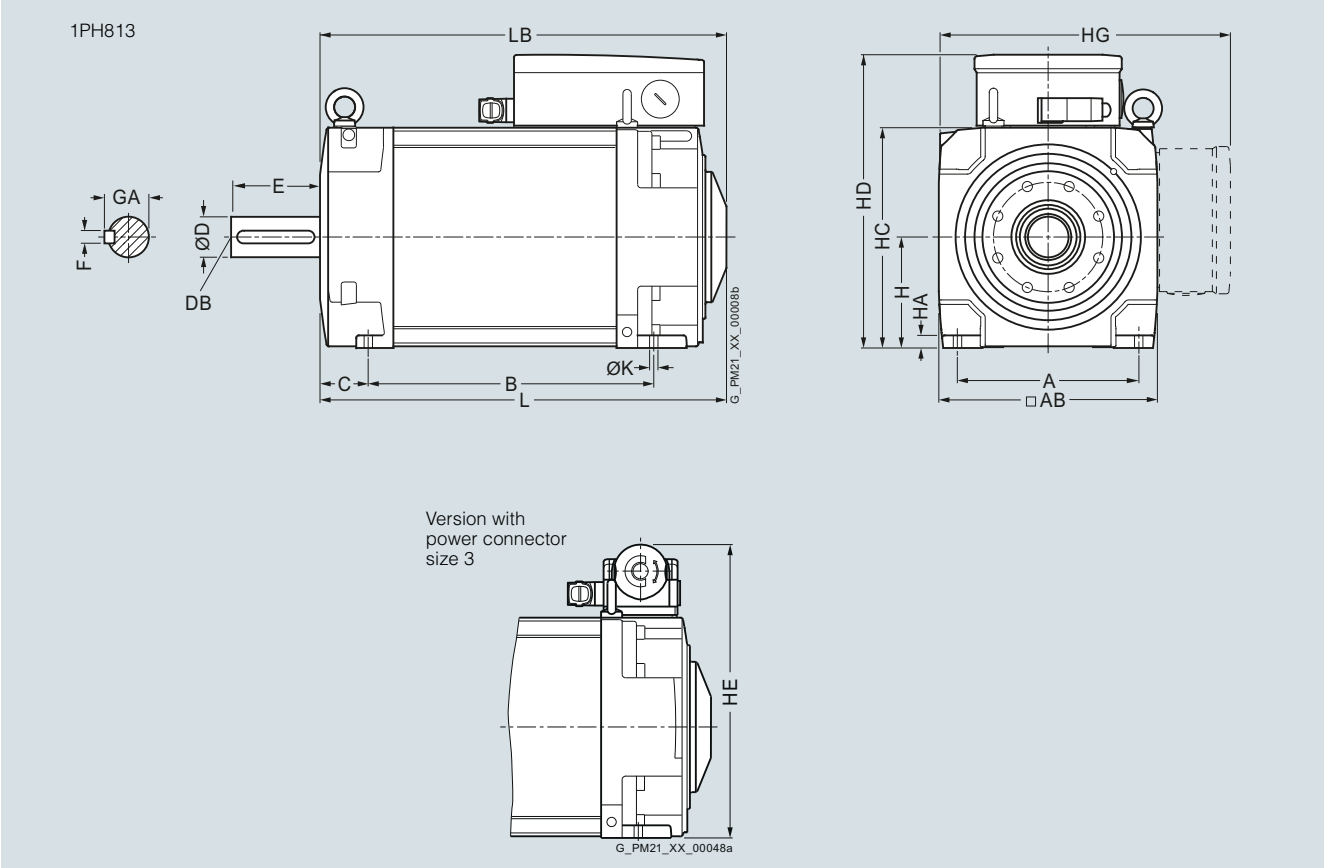

For motor		Dimensions in mm (inches)															
Shaft height	Type	DIN IEC	a B	a_1 P	b A	b_1 N	c HA	c_1 LA	e_1 M	f AB	f_1 T	h H	k LB	m BA	m_1 –	m_2 –	n AA
1PH8 type of construction IM B3, water cooling																	
132	1PH8131		220.5 (8.68)	–	216 (8.50)	–	15 (0.59)	–	–	260 (10.24)	–	132 (5.20)	347.5 (13.68)	42 (1.65)	81 (3.19)	12 (0.47)	43 (1.69)
	1PH8133		265.5 (10.45)										392.5 (15.45)				
	1PH8135		310.5 (12.22)										437.5 (17.22)				
	1PH8137		350.5 (13.80)										477.5 (18.80)				

										Shaft extension DE				
Shaft height	Type	DIN IEC	p HD	– HE	p_2 HC	p_3 HG	s K	s_2 S	w_1 C	**d D**	d_6 DB	l E	t GA	u F
132	1PH8131		347.5 (13.68)	347 (13.66)	262 (10.31)	357.5 (14.07)	12 (0.47)	–	53 (2.09)	**48 (1.89)**	M16	110 (4.33)	51.5 (2.03)	14 (0.55)
	1PH8133													
	1PH8135													
	1PH8137													

© Siemens 2022

Dimensional drawings

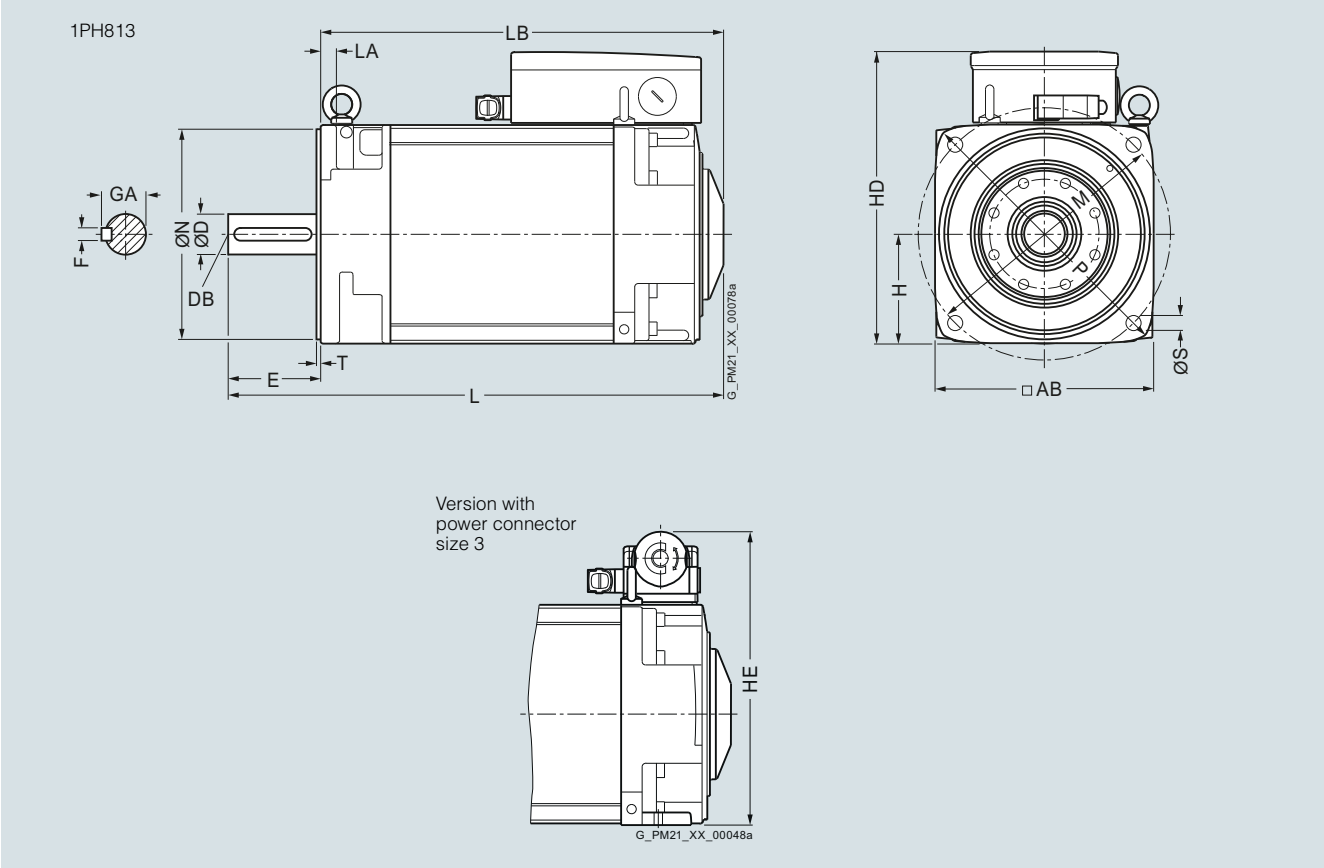

For motor		Dimensions in mm (inches)															
Shaft height	Type	DIN IEC	a B	a_1 P	b A	b_1 N	c HA	c_1 LA	e_1 M	f AB	f_1 T	h H	k LB	m BA	m_1 –	m_2 –	n AA
1PH8 type of construction IM B5, water cooling																	
132	1PH8131		–	340 (13.39)	–	250 (9.84)	–	18 (0.71)	300 (11.81)	260 (10.24)	5 (0.20)	132 (5.20)	347.5 (13.68)	–	–	–	–
	1PH8133												392.5 (15.45)				
	1PH8135												437.5 (17.22)				
	1PH8137												477.5 (18.80)				

										Shaft extension DE				
Shaft height	Type	DIN IEC	p HD	– HE	p_2 HC	p_3 HG	s K	s_2 S	w_1 C	**d D**	d_6 DB	i_2 E	t GA	u F
132	1PH8131		345.5 (13.60)	345 (13.58)	–	–	–	18 (0.71)	–	**48 (1.89)**	M16	110 (4.33)	51.5 (2.03)	14 (0.55)
	1PH8133													
	1PH8135													
	1PH8137													

© Siemens 2022

Dimensional drawings

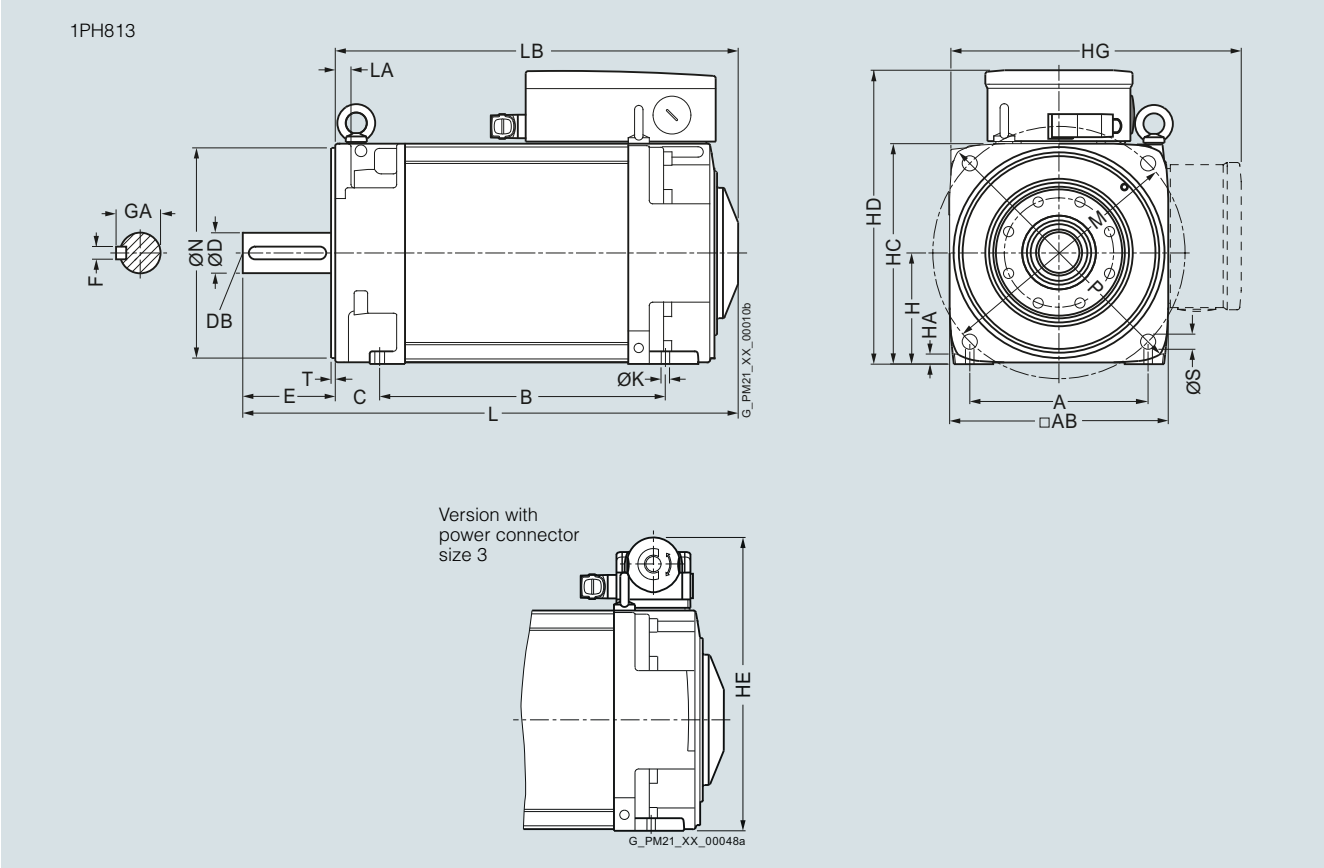

For motor		Dimensions in mm (inches)															
Shaft height	Type	DIN IEC	a B	a_1 P	b A	b_1 N	c HA	c_1 LA	e_1 M	f AB	f_1 T	h H	k LB	m BA	m_1 –	m_2 –	n AA
1PH8 type of construction IM B35, water cooling																	
132	1PH8131		220.5 (8.68)	340 (13.39)	216 (8.50)	250 (9.84)	15 (0.59)	18 (0.71)	300 (11.81)	260 (10.24)	5 (0.20)	132 (5.20)	347.5 (13.68)	42 (1.65)	81 (3.19)	12 (0.47)	43 (1.69)
	1PH8133		265.5 (10.45)										392.5 (15.45)				
	1PH8135		310.5 (12.22)										437.5 (17.22)				
	1PH8137		350.5 (13.80)										477.5 (18.80)				

										Shaft extension DE				
Shaft height	Type	DIN IEC	p HD	– HE	p_2 HC	p_3 HG	s K	s_2 S	w_1 C	**d D**	d_6 DB	i_2 E	t GA	u F
132	1PH8131		347.5 (13.68)	347 (13.66)	262 (10.31)	357.5 (14.07)	12 (0.47)	18 (0.71)	53 (2.09)	**48 (1.89)**	M16	110 (4.33)	51.5 (2.03)	14 (0.55)
	1PH8133													
	1PH8135													
	1PH8137													

© Siemens 2022

Dimensional drawings

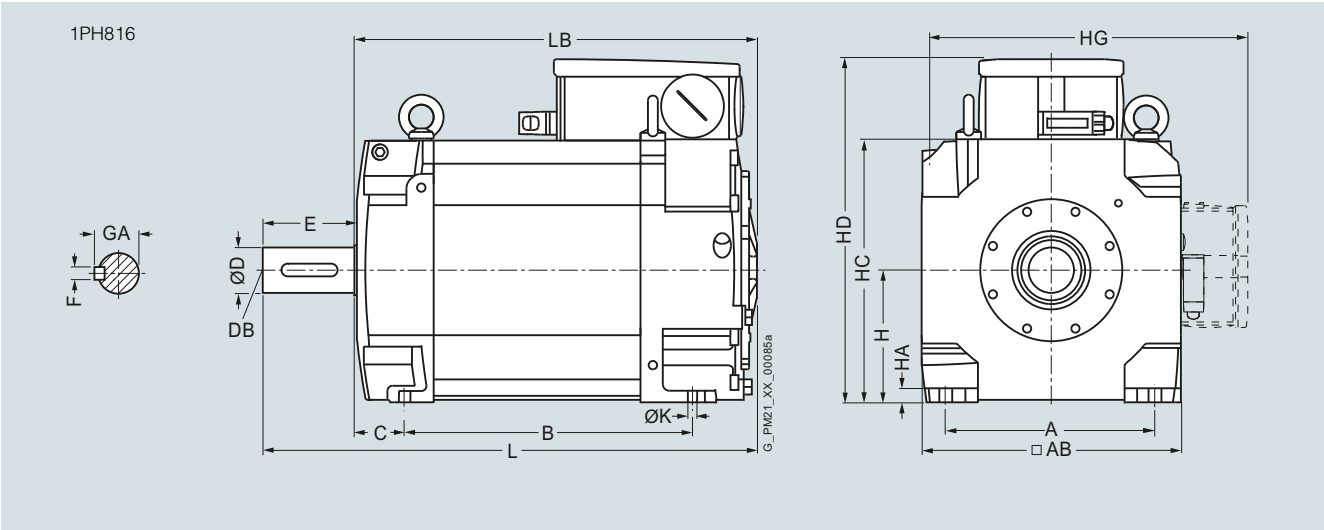

For motor		Dimensions in mm (inches)															
Shaft height	Type	DIN IEC	a B	a_1 P	b A	b_1 N	c HA	c_1 LA	e_1 M	f AB	f_1 T	h H	k LB	m BA	m_1 –	m_2 –	n AA
1PH8 type of construction IM B3, water cooling																	
160	1PH8164		346.5 (13.64)	–	254 (10.00)	–	17 (0.67)	23 (0.91)	–	314 (12.36)	–	160 (6.30)	488.5 (19.23)	53 (2.09)	91 (3.58)	17 (0.67)	70 (2.76)
	1PH8166		406.5 (16.00)										548.5 (21.59)				
	1PH8168		446.5 (17.58)										588.5 (23.17)				

											Shaft extension DE				
Shaft height	Type	DIN IEC	p HD	p_1 HE	p_2 HC	p_3 HG	s K	s_2 S	s_4 –	w_1 C	**d D**	d_6 DB	l L	t GA	u F
160	1PH8164		415.5 (16.36)	–	317 (12.48)	412.5 (16.24)	14 (0.55)	–	–	61 (2.40)	**55 (2.17)**	M20	110 (4.33)	59 (2.32)	16 (0.63)
	1PH8166														
	1PH8168														

© Siemens 2022

Dimensional drawings

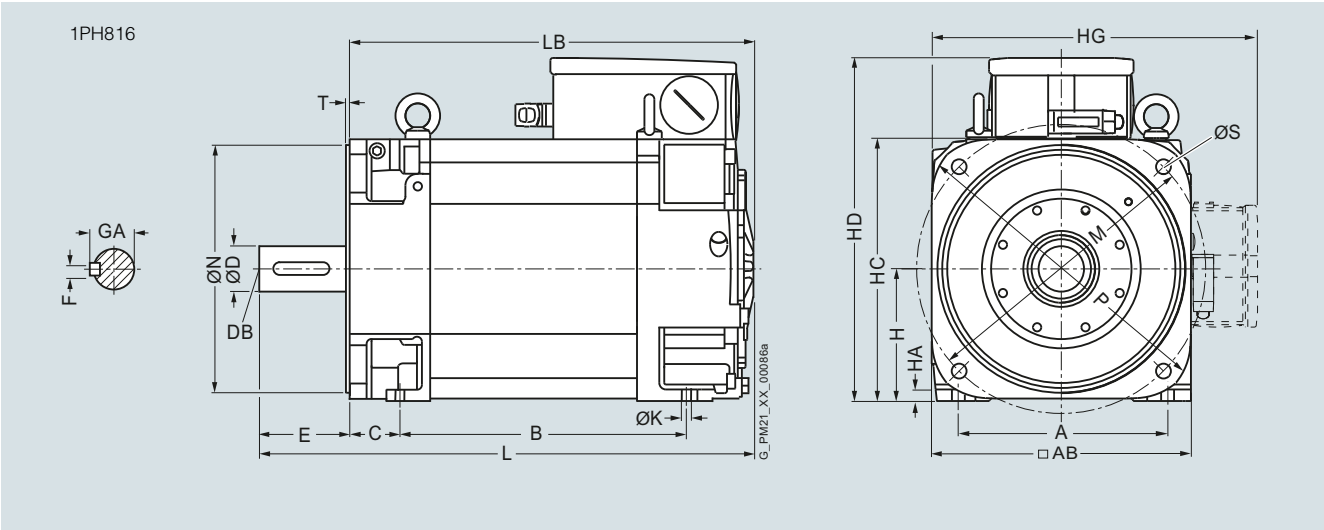

For motor		Dimensions in mm (inches)																
Shaft height	Type	DIN IEC	a B	a_1 P	b A	b_1 N	c HA	c_1 LA	e_1 M	f AB	f_1 T	h H	k LB	m BA	m_1 –	m_2 –	n AA
1PH8 type of construction IM B5/IM B35, water cooling																	
160	1PH8164		346.5 (13.64)	393 (15.47)	254 (10.00)	300 (11.81)	17 (0.67)	–	350 (13.78)	314 (12.36)	5 (0.20)	160 (6.30)	488.5 (19.23)	53 (2.09)	91 (3.58)	17 (0.67)	70 (2.76)
	1PH8166		406.5 (16.00)										548.5 (21.59)				
	1PH8168		446.5 (17.58)										588.5 (23.17)				

												Shaft extension DE				
Shaft height	Type	DIN IEC	p HD	p_1 HE	p_2 HC	p_3 HG	s K	s_2 S	s_3 –	s_4 –	w_1 C	**d D**	d_6 DB	i_2 E	t GA	u F
160	1PH8164		415.5 (16.36)	–	317 (12.48)	412.5 (16.24)	14 (0.55)	18 (0.71)	M63 × 1.5	–	61 (2.40)	**55 (2.17)**	M20	110 (4.33)	59 (2.32)	16 (0.63)
	1PH8166															
	1PH8168															

© Siemens 2022

Dimensional drawings

1PH818

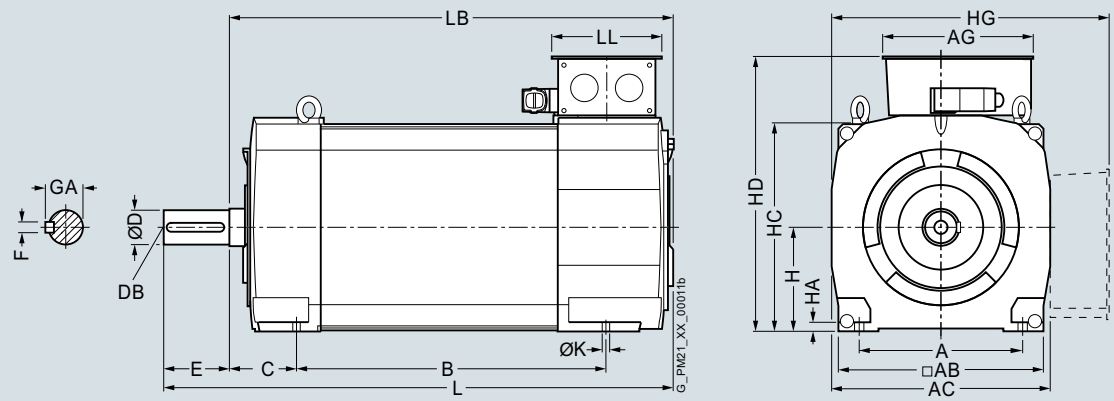

For motor		Dimensions in mm (inches)													
Shaft height	Type	DIN IEC	a B	b A	c HA	f AB	g AC	h H	k LB	m BA	n AA	p_2 HC	s K	w_1 C	
1PH8 types of construction IM B3/IM V5, water cooling															
180	1PH8184		430 (16.93)	279 (10.98)	15 (0.59)	356 (14.02)	384 (15.12)	180 (7.09)	670 (26.38)	138 (5.43)	73 (2.87)	372 (14.65)	14.5 (0.57)	121 (4.76)	
	1PH8186		520 (20.47)						760 (29.92)						

			Shaft extension DE					Terminal box type											
								1XB7322				1XB7422				1XB7700			
Shaft height	Type	DIN IEC	**d** **D**	d_6 DB	l E	t GA	u F	p HD	p_3 HG	r LL	x_1 AG	p HD	p_3 HG	r LL	x_1 AG	p HD	p_3 HG	r LL	x_1 AG
180	1PH8184		**65m6**	M20	140 (5.51)	69 (2.72)	18 (0.71)	484 (19.06)	485 (19.09)	197 (7.76)	258 (10.16)	539 (21.22)	540 (21.26)	230 (9.06)	303 (11.93)	588 (23.15)	574 (22.60)	310 (12.20)	295 (11.61)
	1PH8186																		

© Siemens 2022

Dimensional drawings

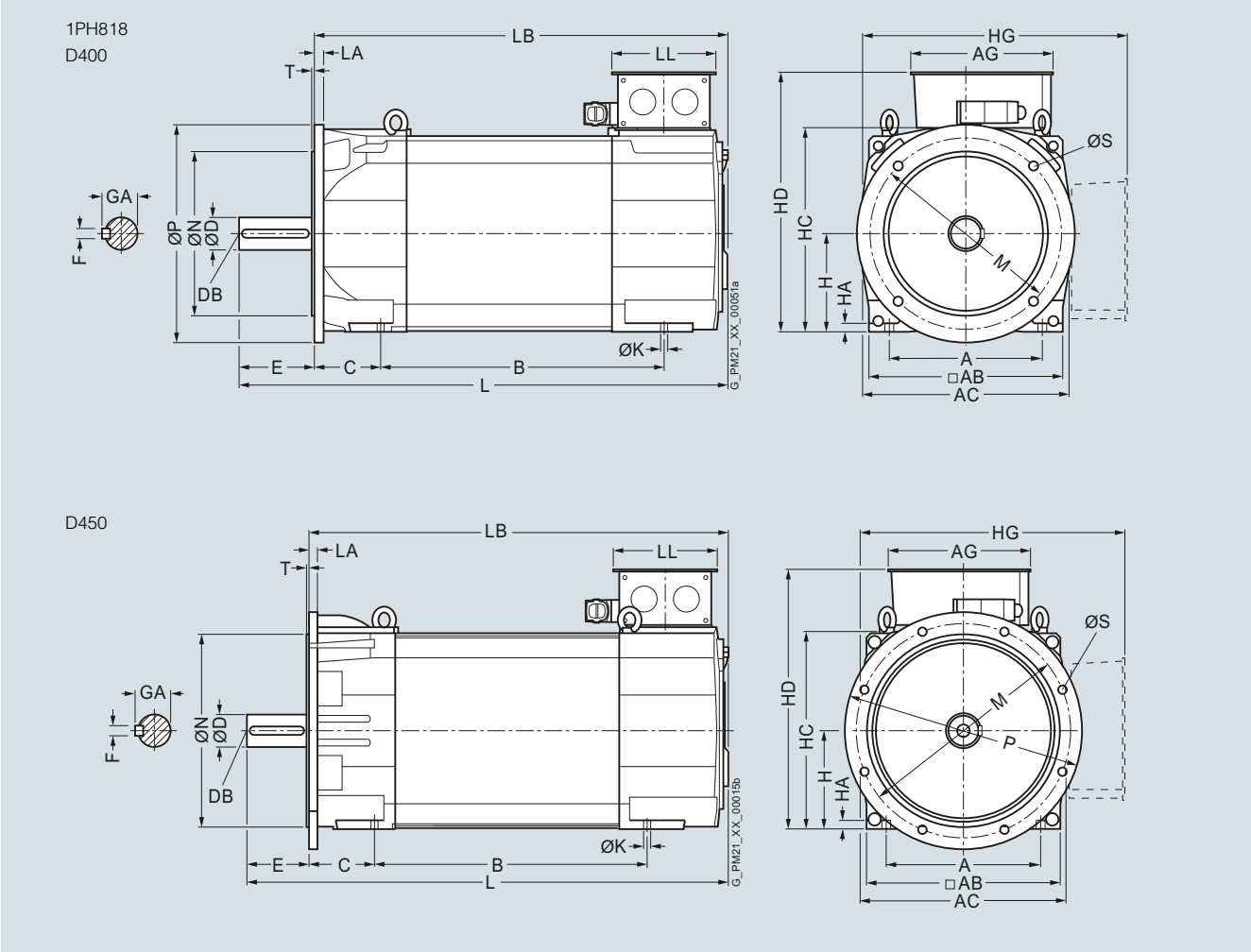

For motor		Dimensions in mm (inches)																	
				D400	D450		D400	D450			D400	D450							
Shaft height	Type	DIN IEC	a B	a_1 P		b A	b_1 N		c HA	c_1 LA	e_1 M		f AB	f_1 T	g AC	h H	k LB	m BA
1PH8 types of construction IM B5/IM B35/IM V15, water cooling																			
180	1PH8184		430 (16.93)	400 (15.75)	450 (17.72)	279 (10.98)	300 (11.81)	350 (13.78)	15 (0.59)	16 (0.63)	350 (13.78)	400 (15.75)	356 (14.02)	5 (0.20)	384 (15.12)	180 (7.09)	670 (26.38)	123 (4.84)
	1PH8186		520 (20.47)														760 (29.92)	

							Shaft extension DE					Terminal box type
												Dimensions as for types of construction IM B3/IM V5
Shaft height	Type	DIN IEC	n AA	p_2 HC	s K	w_1 C	**d D**	d_6 DB	l E	t GA	u F	
180	1PH8184		73 (2.87)	372 (14.65)	14.5 (0.57)	121 (4.76)	**65m6**	M20	140 (5.51)	69 (2.72)	18 (0.71)	
	1PH8186											

© Siemens 2022

Dimensional drawings

1PH822

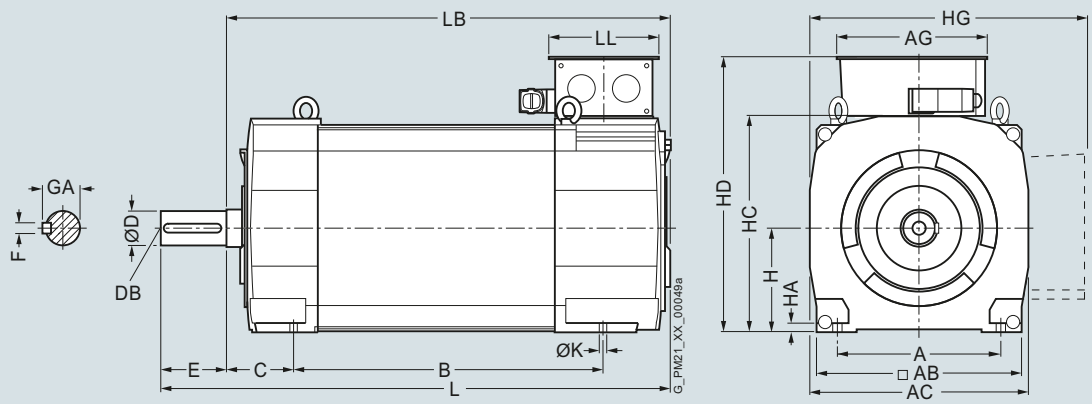

For motor		Dimensions in mm (inches)													
Shaft height	Type	DIN IEC	a B	b A	c HA	f AB	g AC	h H	k LB	m BA	n AA	p_2 HC	s K	w_1 C	
1PH8 types of construction IM B3/IM V5, water cooling															
225	1PH8224		445 (17.52)	356 (14.02)	18 (0.71)	446 (17.56)	474 (18.66)	225 (8.86)	775 (30.51)	154 (6.06)	88 (3.46)	462 (18.19)	18.5 (0.73)	149 (5.87)	
	1PH8226		545 (21.46)						875 (34.45)						
	1PH8228		635 (25.0)						965 (37.99)						

			Shaft extension DE					Terminal box type											
								1XB7322				1XB7422				1XB7700			
Shaft height	Type	DIN IEC	**d** **D**	d_6 DB	l E	t GA	u F	p HD	p_3 HG	r LL	x_1 AG	p HD	p_3 HG	r LL	x_1 AG	p HD	p_3 HG	r LL	x_1 AG
225	1PH8224		**75m6**	M20	140 (5.51)	79.5 (3.13)	20 (0.79)	579 (22.80)	577 (22.72)	197 (7.76)	258 (10.16)	634 (24.96)	632 (24.88)	230 (9.06)	303 (11.93)	683 (26.89)	666 (26.22)	310 (12.20)	295 (11.61)
	1PH8226																		
	1PH8228																		

© Siemens 2022

Dimensional drawings

1PH822

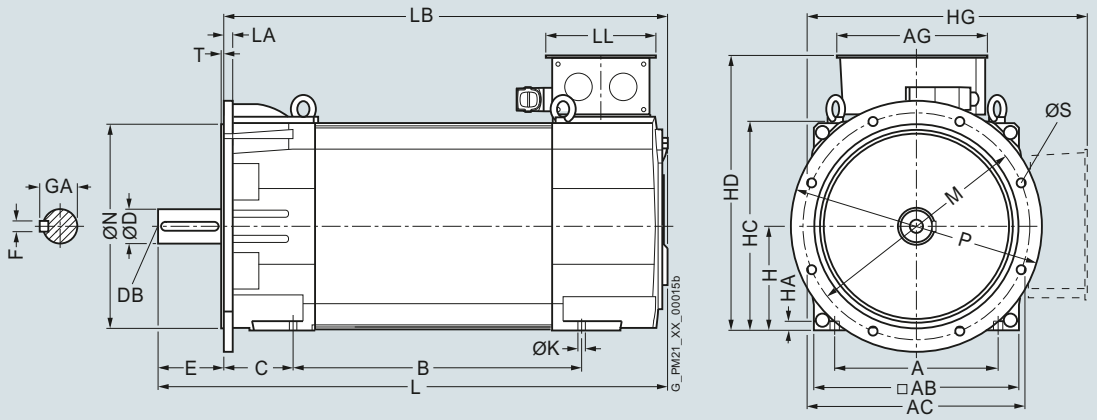

For motor		Dimensions in mm (inches)																	
Shaft height	Type	DIN IEC	a B	a_1 P	b A	b_1 N	c HA	c_1 LA	e_1 M	f AB	f_1 T	g AC	h H	k LB	m BA	n AA	p_2 HC	w_1 C
1PH8 types of construction IM B5/IM B35/IM V15 D550, water cooling																			
225	1PH8224		445 (17.52)	550 (21.65)	356 (14.02)	450 (17.72)	18 (0.71)	20 (0.79)	500 (19.69)	446 (17.56)	5 (0.20)	474 (18.66)	225 (8.86)	770 (30.31)	144 (5.67)	88 (3.46)	462 (18.19)	149 (5.87)
	1PH8226		545 (21.46)											872 (34.33)				
	1PH8228		635 (25.00)											962 (37.87)				

			Shaft extension DE					Terminal box type
								Dimensions as for types of construction IM B3/IM V5
Shaft height	Type	DIN IEC	**d D**	d_6 DB	l E	t GA	u F	
225	1PH8224		**75m6**	M20	140 (5.51)	79.5 (3.13)	20 (0.79)	
	1PH8226							
	1PH8228							

© Siemens 2022

Dimensional drawings

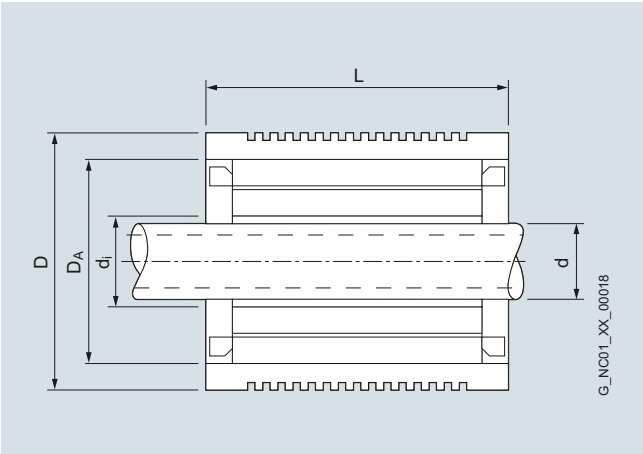

For motor Type	Dimensions in mm (inches) Total length L	Total outer diameter D	Stator outer diameter D_A	Rotor inner diameter d_i
1FE1 High Speed series				
1FE1051-4....-1BA.	130 (5.12)	120 (4.72)	106 (4.17)	46 (1.81)
1FE1052-4....-1BA.	180 (7.09)			
1FE1053-4....-1BA.	230 (9.06)			
1FE1072-4W...-1BA.	185 (7.28)	155 (6.10)	135 (5.31)	58 (2.28)
1FE1073-4W...-1BA.	235 (9.25)			
1FE1074-4W...-1BA.	285 (11.22)			
1FE1075-4W...-1BA.	335 (13.19)	155 (6.10)	135 (5.31)	58 (2.28)
1FE1082-4W...-1BA.	190 (7.48)	180 (7.09)	160 (6.30)	68 (2.68)
1FE1083-4W...-1BA.	240 (9.45)			
1FE1084-4W...-1BA.	290 (11.42)			
1FE1085-4W...-1BA.	340 (13.39)			
1FE1092-4W...-1BR.	200 (7.87)	205 (8.07)	180 (7.09)	80 (3.15)
1FE1093-4W...-1BA.	250 (9.84)			72 (2.83)
1FE1093-4W...-1BR.	250 (9.84)			80 (3.15)
1FE1094-4W...-1BA.	300 (11.81)			72 (2.83)
1FE1094-4W...-1BR.	300 (11.81)			80 (3.15)
1FE1095-4W...-1BA.	350 (13.78)			72 (2.83)
1FE1095-4W...-1BR.	350 (13.78)			80 (3.15)
1FE1096-4W...-1BA.	400 (15.75)			72 (2.83)
1FE1096-4W...-1BR.	400 (15.75)			80 (3.15)
1FE1103-4W...-1BA.	265 (10.43)	230 (9.06)	200 (7.87)	96 (3.78)
1FE1104-4W...-1BA.	315 (12.40)			
1FE1105-4W...-1BA.	365 (14.37)			
1FE1106-4W...-1BA.	415 (16.34)			
1FE1124-4W...-1BA.	315 (12.40)	270 (10.63)	240 (9.45)	110 (4.33)
1FE1125-4W...-1BA.	365 (14.37)			
1FE1126-4W...-1BA.	415 (16.34)			

For motor Type	Dimensions in mm (inches) Total length L	Total outer diameter D	Stator outer diameter D_A	Rotor inner diameter d_i -..A.	Rotor inner diameter with sleeve d -..B.	d -..C.	d -..D.	d -..E.
1FE1 High Torque series								
1FE1041-6W...-1BA.	107 (4.21)	95 (3.74)	85 (3.35)	44 (1.73)	–	–	–	–
1FE1042-6W...-1BA.	157 (6.18)	95 (3.74)	85 (3.35)	44 (1.73)	–	–	–	–
1FE1051-6W...-1B..	170 (6.69)	115 (4.53)	103.5 (4.07)	42 (1.65)	–	33 (1.30)	–	–
1FE1052-6W...-1B..	220 (8.66)	115 (4.53)	103.5 (4.07)	42 (1.65)	–	33 (1.30)	–	–
1FE1054-6W...-1BA.	320 (12.60)	115 (4.53)	103.5 (4.07)	42 (1.65)	–	–	–	–
1FE1061-6W...-1B..	130 (5.12)	130 (5.12)	118 (4.65)	58 (2.28)	48 (1.89)	–	–	–
1FE1062-6W...-1B..	180 (7.09)	130 (5.12)	118 (4.65)	58 (2.28)	–	–	–	–
1FE1064-6W...-1BA.	280 (11.02)	130 (5.12)	118 (4.65)	58 (2.28)	–	–	–	–
1FE1082-6W...-1B..	195 (7.68)	190 (7.48)	170 (6.69)	93 (3.66)	67 (2.64)	74 (2.91)	80 (23.15)	–
1FE1083-6W...-1B..	245 (9.65)	190 (7.48)	170 (6.69)	93 (3.66)	67 (2.64)	74 (2.91)	–	–
1FE1084-6W...-1B..	295 (11.61)	190 (7.48)	170 (6.69)	93 (3.66)	67 (2.64)	74 (2.91)	–	–
1FE1091-6W...-1B..	150 (5.91)	205 (8.07)	180 (7.09)	92 (3.62)	67 (2.64)	80 (3.15)	–	–
1FE1092-6W...-1B..	200 (7.87)	205 (8.07)	180 (7.09)	92 (3.62)	67 (2.64)	80 (3.15)	–	–
1FE1093-6W...-1B..	250 (9.84)	205 (8.07)	180 (7.09)	92 (3.62)	67 (2.64)	80 (3.15)	–	–
1FE1113-6W...-1B..	260 (10.24)	250 (9.84)	220 (8.66)	120 (4.72)	–	–	80 (23.15)	105.2 (4.14)
1FE1114-6W...-1B..	310 (12.20)	250 (9.84)	220 (8.66)	120 (4.72)	82 (3.23)	102 (4.02)	–	–
1FE1115-6W...-1BC.	360 (14.17)	250 (9.84)	220 (8.66)	120 (4.72)	–	102 (4.02)	–	–
1FE1116-6W...-1B..	410 (16.14)	250 (9.84)	220 (8.66)	120 (4.72)	82 (3.23)	102 (4.02)	–	–
1FE1143-8W...-1BA.	290 (11.42)	310 (12.20)	280 (11.02)	166.7 (6.56)	–	–	–	–
1FE1144-8W...-1B..	340 (13.39)	310 (12.20)	280 (11.02)	166.7 (6.56)	–	150.3 (5.92)	–	–
1FE1145-8W...-1B..	390 (15.35)	310 (12.20)	280 (11.02)	–	–	150.3 (5.92)	140.3 (5.52)	125 (4.92)
1FE1147-8W...-1B..	490 (19.29)	310 (12.20)	280 (11.02)	–	–	150.3 (5.92)	140.3 (5.52)	–

© Siemens 2022

Dimensional drawings

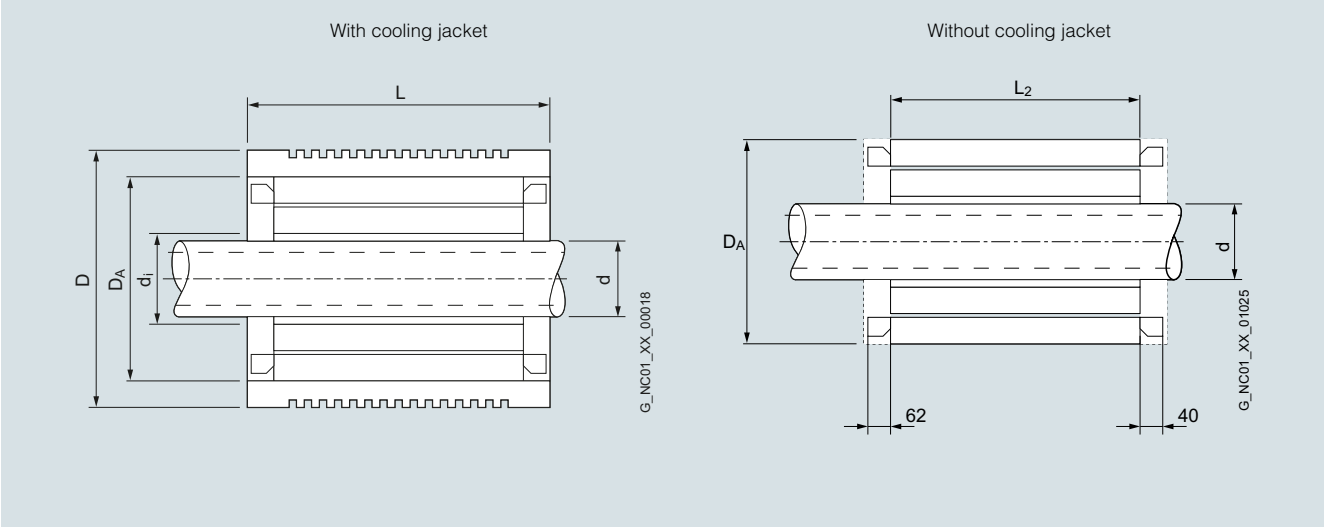

For motor	Dimensions in mm (inches)				
	Total length	Length	Total outer diameter	Stator outer diameter	Rotor inner diameter
Type	L	L_2	D	D_A	d
1FE2 High Torque series					
1FE2182-8...	320 (12.60)	200 (7.87)	400 (15.75)	359 (14.13)	200 (7.87)
1FE2183-8...	370 (14.57)	250 (9.54)			
1FE2184-8...	420 (16.54)	300 (11.81)			
1FE2185-8...	470 (18.50)	350 (13.78)			
1FE2186-8...	520 (20.47)	400 (15.75)			
1FE2187-8...	570 (22.44)	450 (17.72)			

© Siemens 2022

Dimensional drawings

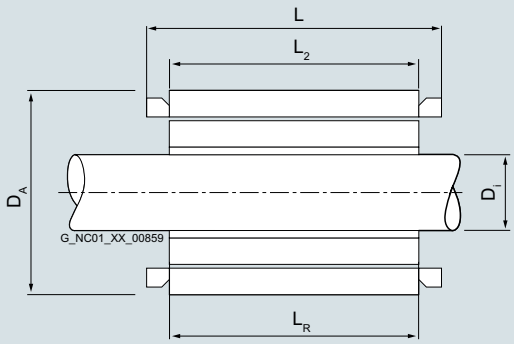

For motor Dimensions in mm (inches) Type	Total length L	Active part length L_2	Stator outer diameter D_A	Rotor inner diameter d_i [1]	Rotor length L_R
1FE2 High Torque series					
1FE2093-8AG..-...1 1FE2093-8AM..-...2	228 (8.98)	150 (5.91)	179.7 (7.08)	90 (3.54)	178 (7.01)
1FE2094-8AJ..-...1 1FE2094-8AM..-...2 1FE2094-8CJ..-...1 1FE2094-8CG..-...2	278 (10.95)	200 (7.87)	179.7 (7.08)	90 (3.54)	225[2]/228[3] (8.86[2])/(8.98[3])
1FE2095-8CJ..-...1 1FE2095-8CG..-...2	328 (12.91)	250 (9.84)	179.7 (7.08)	90 (3.54)	275 (10.83)
1FE2145-8CE..-...1 1FE2145-8CC..-...2	343 (13.50)	250 (9.84)	279.7 (11.01)	140 (5.51)	286 (11.26)
1FE2147-8CE..-...1 1FE2147-8CC..-...2	443 (17.44)	350 (13.78)	279.7 (11.01)	140 (5.51)	386 (15.20)

[1] Final dimension after finish-machining (delivery condition: rotor unmachined with allowance).
[2] Copper rotor.
[3] Aluminum rotor.

© Siemens 2022

Dimensional drawings

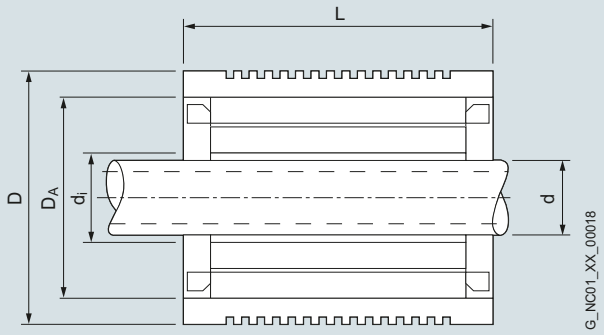

For motor	Dimensions in mm (inches)				
Type	Standard spindle diameter	Rotor inner diameter	Stator outer diameter	Total outer diameter	Total length
	d	d_i	D_A	D	L
1PH2 water cooling					
1PH2113	82 (3.23)	100 (3.94)	220 (8.66)	250 (9.84)	290 (11.42)
1PH2115					310 (12.20)
1PH2117					330 (12.99)
1PH2118					390 (15.35)

© Siemens 2022

2SP1 motor spindles – Water cooling

Dimensional drawings

2SP120

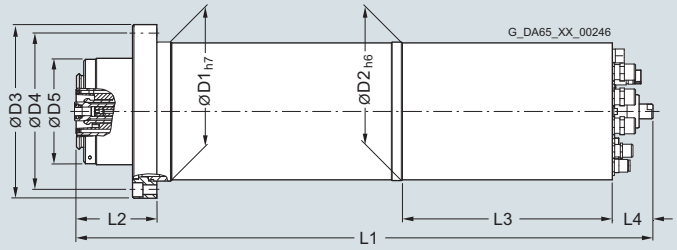

2SP125

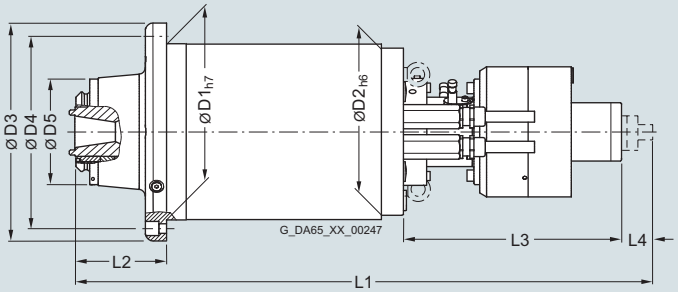

6

For motor Type	Dimensions in mm (inches) D1	D2	D3	D4	D5	L1[1]	L2	L3	L4
2SP1 water cooling									
2SP1202	200 (7.87)	199 (7.84)	250 (9.85)	225 (8.87)	150 (5.91)	735[4] (28.94)	115.5 (4.55)	309[4] (12.17)	58[4] (2.28)
2SP1204						835[4] (32.87)			
2SP1253[2]	250 (9.85)	237 (9.34)	310 (12.20)	275 (10.83)	150 (5.91)	813 (32.03)	124.4 (4.90)	310 (12.20)	43 (1.69)
2SP1255[2]						913 (35.97)			
2SP1253[3]						819 (32.27)	130.0 (5.12)		
2SP1255[3]						919 (36.21)			

[1] The spindle is approx. 43 mm (1.69 in) shorter without turning bushing.
[2] HSK A63 tool interface.
[3] SK40, CAT40, BT40 tool interfaces.
[4] Spindle length L1 is approx. 118 mm (4.65 in) shorter, L3 approx. 147 mm (5.79 in) shorter and L4 approx. 30 mm (1.18 in) longer with a hydraulic tool clamping device.

© Siemens 2022

7/2 Built-on optoelectronic rotary encoders
7/2 Introduction
7/4 Incremental encoders
7/7 Absolute encoders
7/13 Accessories

Part 9 **Drive Technology Configurator selection tool**
Guided product selection through to exact article number.
www.siemens.com/dt-configurator

© Siemens 2022

Motion Control Encoder measuring systems

Built-on optoelectronic rotary encoders

Introduction

Overview

Motion control encoder	Interface	Built-on encoder usable for Safety Integrated	Resolution S/R = signals/revolution	Accuracy arcsec	Cable length m (ft)	Degree of protection at housing (at shaft input)
Incremental encoders						
	sin/cos 1 V_{pp}	Yes	1000 ... 2500 S/R	± 18 mech. × 3600/ PPR count *z*	150 (492)	IP67 (IP64)
	RS422 (TTL)	[1]	500 ... 5000 S/R	± 18 mech. × 3600/ PPR count *z*	100 (328)	IP67 (IP64)
	HTL	[1]	100 ... 2500 S/R	± 18 mech. × 3600/ PPR count *z*	300 (984)	IP67 (IP64)
Absolute encoders						
	DRIVE-CLiQ	Yes	Single-turn 24 bit Multi-turn 36 bit (2^{24} steps × 4096 revolutions)	± 20	100 (328)	IP67 (IP64)
	SSI	No	Single-turn 13 bit (8192 steps) Multi-turn 25 bit (8192 steps × 4096 revolutions)	± 60	100 (328)	IP67 (IP64)
	EnDat 2.1	Yes	Single-turn 13 bit (8192 steps) Multi-turn 25 bit (8192 steps × 4096 revolutions)	± 60 (incremental track)	150 (492)	IP67 (IP64)
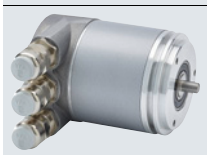	PROFIBUS DP-V2	No	Single-turn 13 bit (8192 steps) Multi-turn 27 bit (8192 steps × 16384 revolutions)	± 79	100 (328)	IP67 (IP64)
	PROFINET IO with RT/IRT	No	Single-turn 13 bit/16 bit (8192/65536 steps) Multi-turn 27 bit/30 bit (8192/65536 steps × 16384 revolutions)	± 79	100 (328)	IP67 (IP64)

Accessories for measuring systems

Couplings
Clamps
Signal connectors as mating connectors
MOTION-CONNECT DRIVE-CLiQ signal cables

[1] If you require information about the usability of motion control encoder measuring systems for Safety Integrated, please contact your local Siemens office.

© Siemens 2022

Overview

Incremental and absolute encoders with mounting accessories

Motion control encoders are optoelectronic built-on encoders that detect the traversing distances, angles of rotation, speeds or positions of machine axes. Motion control encoders are direct measuring systems that are built-on to shafts, axes or motors. They can be used in conjunction with numerical and programmable logic controllers, drives and position displays. Motion control encoders are system-tested, certified components that have been harmonized for use with the following systems:

- SINUMERIK CNCs
- SIMOTION Motion Control Systems
- SIMATIC programmable logic controllers
- SINAMICS drive systems

Application

Motion control encoders are used with machine tools and production machines as additional external measuring systems. They are available as incremental or absolute encoders.

Incremental encoders

In the case of incremental encoders, the machine must travel to a reference point after each power-off state, as the position is not usually stored in the controller. Movements of the machine while the power is off are not recorded.

Incremental encoders are suitable for use in simple machine concepts with mostly small dimensions.

Absolute encoders

Absolute encoders, on the other hand, also record movements while the power is off and return the actual position after power on. Travel to a reference point is not necessary.

Absolute encoders are suitable for complex machines or machines with large dimensions.

Design

All motion control encoders are available in Synchro flange and clamp flange versions. The absolute encoders are also available with a hollow shaft and torque arm.

The motion control encoders are driven via a plug-in coupling or spring disk coupling. Alternatively, pulleys can also be used.

The motor control encoder supply voltage is 5 V DC or alternatively 10 V to 30 V DC. The 10 V to 30 V DC version supports longer cable lengths. Most control systems supply the voltage directly at the measuring circuit connector. With SINAMICS, the measuring systems are provided with power via the Sensor Modules.

For motion control encoders with cables, the cable length including the connector is 1 m (3.28 ft).

The following bending radii must be observed for the cable to the built-on encoder:

- One-time bending: ≥ 20 mm (0.79 in)
- Continuous bending: ≥ 75 mm (2.95 in)

Additional information

Power supply

The measuring systems fulfill the requirements of IEC 61010-1 only if power is supplied from a secondary circuit with limited energy acc. to IEC 61010-1$^{3rd\ Ed.}$, Section 9.4, or with limited power source acc. to IEC 60950-1$^{2nd\ Ed.}$, Section 2.5, or from a Class 2 secondary circuit in accordance with UL 1310.
The corresponding sections of DIN EN 61010-1, EN 61010-1, UL 61010-1 and CAN/CSA-C22.2 No. 61010-1 can be used instead of IEC 61010-1$^{3rd\ Ed.}$, Section 9.4, and the corresponding sections of DIN EN 60950-1, EN 60950-1, UL 60950-1 and CAN/CSA-C22.2 No. 60950-1 can be used instead of IEC 60950-1$^{2nd\ Ed.}$, Section 2.5.

© Siemens 2022

Function

Incremental encoder with sin/cos 1 V_{pp} and clamp flange incl. cable with connector as well as incremental encoder with RS422/HTL and Synchro flange

Incremental encoders detect relative movement and deliver a defined number of electrical pulses per revolution, which represent the measurement of the traveled distance or angle.

Incremental encoders operate on the principle of optoelectronic scanning of dividing discs with the transmitted light principle. The light source is a light emitting diode (LED). The light-dark modulation generated as the encoder shaft rotates is picked up by photoelectronic elements. With an appropriate arrangement of the line pattern on the dividing disk connected to the shaft and the fixed aperture, the photoelectronic elements provide two trace signals A and B at 90° to one another, as well as a reference signal R.

The encoder electronics amplify these signals and convert them to different output levels.

Signal levels

The following signal levels are available for the incremental encoders:

Signal level	Benefits
Analog signals sin/cos with level 1 V_{pp}	The analog signal allows the digitization of the trace signals. In order to obtain a fine resolution, the signals are interpolated in the higher-level controller.
RS422 differential signals (TTL)	The resolution can be quadrupled by means of edge evaluation.
HTL (High Voltage Transistor Logic)	Built-on encoders with an HTL interface are designed for applications with digital inputs with a 24 V level. The resolution can be quadrupled by means of edge evaluation.

Technical specifications

Article No.		6FX2001-3....	6FX2001-2....	6FX2001-4...0
Product name		Motion control encoder	Motion control encoder	Motion control encoder
Product designation		Incremental encoder with sin/cos 1 V_{pp}	Incremental encoder with RS422 (TTL)	Incremental encoder with HTL
Operating voltage DC V_p on encoder	V	5 ± 10 %	5 ± 10 % or 10 ... 30	10 ... 30
Limit frequency, typical	kHz	≥ 180 (- 3 dB) ≥ 450 (- 6 dB)	–	–
Scanning frequency, maximum	kHz	–	300	300
No-load current consumption, maximum	mA	150	150	150
Resolution, maximum	S/R	2500	5000	2500
Signal level		Sinusoidal 1 V_{pp}	RS422 (TTL)	$V_H \geq 21$ V with $I_H = 20$ mA at 24 V $V_L \leq 2.8$ V with $I_L = 20$ mA at 24 V
Outputs protected against short-circuit to 0 V		Yes Briefly	Yes	Yes Briefly
Switching time (10 … 90 %) rise/fall time t_+/t_- (for 1 m (3.28 ft) cable and recommended input circuit)	ns	–	≤ 50	≤ 200
Phase angle, signal A to B Edge spacing	Degrees	90 ± 10	90	90
• At 300 kHz	µs	–	≥ 0.45	≥ 0.45
Cable length to downstream electronics, maximum [1]	m (ft)	150 (492)	100 (328) without fault signal 50 (164) with fault signal	300 (984)
Accuracy	arcsec	± 18 mech. × 3600/PPR count z	± 18 mech. × 3600/PPR count z	± 18 mech. × 3600/PPR count z
LED failure monitoring		–	High-resistance driver	High-resistance driver
Maximum mechanical speed	rpm	12000	12000	12000
Starting torque at 20 °C (68 °F)	Nm (lb_f-ft)	≤ 0.01 (0.01)	≤ 0.01 (0.01)	≤ 0.01 (0.01)

S/R = signals/revolution

[1] With recommended cable and input circuitry of the downstream electronics, observe max. permissible cable length of module to be evaluated.

© Siemens 2022

Technical specifications

Article No.		6FX2001-3....	6FX2001-2....	6FX2001-4...0
Product name		Motion control encoder	Motion control encoder	Motion control encoder
Product designation		Incremental encoder with sin/cos 1 V_{pp}	Incremental encoder with RS422 (TTL)	Incremental encoder with HTL
Shaft loading capacity				
• $n \leq$ 6000 rpm				
- Axial	N (lb_f)	40 (8.99)	40 (8.99)	40 (8.99)
- Radial at shaft extension	N (lb_f)	60 (13.5)	60 (13.5)	60 (13.5)
• n > 6000 rpm				
- Axial	N (lb_f)	10 (2.25)	10 (2.25)	10 (2.25)
- Radial at shaft extension	N (lb_f)	20 (4.50)	20 (4.50)	20 (4.50)
Shaft diameter				
• Synchro flange	mm (in)	6 (0.24)	6 (0.24)	6 (0.24)
• Clamp flange	mm (in)	10 (0.39)	10 (0.39)	10 (0.39)
Shaft length				
• Synchro flange	mm (in)	10 (0.39)	10 (0.39)	10 (0.39)
• Clamp flange	mm (in)	20 (0.79)	20 (0.79)	20 (0.79)
Angular acceleration, maximum	rad/s^2	10^5	10^5	10^5
Moment of inertia of rotor	kgm^2 (lb_f-in-s^2)	$\leq 2.9 \times 10^{-6}$ (2.57×10^{-5})	$\leq 2.9 \times 10^{-6}$ (2.57×10^{-5})	$\leq 2.9 \times 10^{-6}$ (2.57×10^{-5})
Vibration (55 ... 2000 Hz) according to EN 60068-2-6	m/s^2 (ft/s^2)	≤ 300 (984)	≤ 300 (984)	≤ 300 (984)
Shock according to EN 60068-2-27				
• 6 ms	m/s^2 (ft/s^2)	≤ 2000 (6562)	≤ 2000 (6562)	≤ 2000 (6562)
Degree of protection				
• At housing		IP67	IP67	IP67
• At shaft input		IP64	IP64	IP64
Ambient temperature during				
Operation				
• Flange outlet or fixed cable				
- At V_p = 5 V ± 10 %	°C (°F)	-40 ... +100 (-40 ...+212)	-40 ... +100 (-40 ...+212)	-40 ... +100 (-40 ...+212)
- At V_p = 10 ... 30 V	°C (°F)	–	-40 ... +70 (-40 ... +158)	–
• Flexible cable				
- At V_p = 5 V ± 10 %	°C (°F)	-10 ... +100 (+14 ... +212)	-10 ... +100 (+14 ... +212)	-10 ... +100 (+14 ... +212)
- At V_p = 10 ... 30 V	°C (°F)	–	-10 ... +70 (+14 ... +158)	–
Net weight	kg (lb)	0.3 (0.66)	0.3 (0.66)	0.3 (0.66)
EMC		EMC Directive 2014/30/EC and regulations of EMC directives (applicable basic standards)		
Certificate of suitability		CE, CSA, UL	CE, CSA, UL	CE, CSA, UL

© Siemens 2022

Selection and ordering data

Description	Article No.
Incremental encoder with sin/cos 1 V_{pp}	
5 V DC supply voltage	
• Synchro flange and connection via	
- Axial flange outlet	**6FX2001-3G■■■**
- Radial flange outlet	**6FX2001-3E■■■**
- Cable 1 m (3.28 ft) with connector[1)]	**6FX2001-3C■■■**
Resolution	
1000 S/R	**B 0 0**
1024 S/R	**B 0 2**
2500 S/R	**C 5 0**
Incremental encoder with RS422 (TTL)	
5 V DC supply voltage	
• Synchro flange and connection via	
- Axial flange outlet	**6FX2001-2G■■■**
- Radial flange outlet	**6FX2001-2E■■■**
- Cable 1 m (3.28 ft) with connector [1)]	**6FX2001-2C■■■**
• Clamp flange and connection via	
- Axial flange outlet	**6FX2001-2R■■■**
- Radial flange outlet	**6FX2001-2P■■■**
- Cable 1 m (3.28 ft) with connector [1)]	**6FX2001-2M■■■**
10 ... 30 V DC supply voltage	
• Synchro flange and connection via	
- Axial flange outlet	**6FX2001-2H■■■**
- Radial flange outlet	**6FX2001-2F■■■**
- Cable 1 m (3.28 ft) with connector [1)]	**6FX2001-2D■■■**
• Clamp flange and connection via	
- Axial flange outlet	**6FX2001-2S■■■**
- Radial flange outlet	**6FX2001-2Q■■■**
- Cable 1 m (3.28 ft) with connector [1)]	**6FX2001-2N■■■**
Resolution	
500 S/R	**A 5 0**
1000 S/R	**B 0 0**
1024 S/R	**B 0 2**
1250 S/R	**B 2 5**
1500 S/R	**B 5 0**
2000 S/R	**C 0 0**
2048 S/R	**C 0 4**
2500 S/R	**C 5 0**
3600 S/R	**D 6 0**
5000 S/R	**F 0 0**

S/R = Signals/Revolution

Description	Article No.
Incremental encoder with HTL	
10 ... 30 V DC supply voltage	
• Synchro flange and connection via	
- Axial flange outlet	**6FX2001-4H■■0**
- Radial flange outlet	**6FX2001-4F■■0**
- Cable 1 m (3.28 ft) with connector[1)]	**6FX2001-4D■■0**
• Clamp flange and connection via	
- Axial flange outlet	**6FX2001-4S■■0**
- Radial flange outlet	**6FX2001-4Q■■0**
- Cable 1 m (3.28 ft) with connector[1)]	**6FX2001-4N■■0**
Resolution	
100 S/R	**A 1**
500 S/R	**A 5**
1000 S/R	**B 0**
2500 S/R	**C 5**

[1)] Universal integrated cable outlet for axial and radial outlet direction.

© Siemens 2022

Function

Absolute encoders with SSI/EnDat and PROFIBUS DP (top), and DRIVE-CLiQ and PROFINET IO (bottom)

Absolute encoders output an absolute angular position between 0° and 360°. They operate on the same scanning principle as incremental encoders, but have a greater number of tracks. For example, if there are 13 tracks, then 2^{13} = 8192 steps are coded in the case of single-turn encoders. The code used is a one-step code (gray code). This prevents any scanning errors from occurring. After switching on the machine, the position value is transferred immediately to the controller, travel to a reference point is not necessary.

All absolute encoders are available in single-turn and multi-turn versions.

Single-turn encoders

Single-turn encoders divide one rotation (360 degrees mechanical) into a specific number of steps, e.g. 8192. A unique code word is assigned to each position. After 360° the position values are repeated.

Multi-turn encoders

Multi-turn encoders record the number of revolutions in addition to the absolute position within one revolution. To do this, further code discs which are coupled via gear steps with the encoder shaft are scanned. When evaluating 12 additional tracks, this means that an additional 2^{12} = 4096 revolutions can be coded.

Interfaces

The following interfaces are supported by the absolute encoders:

Interface	Benefits
DRIVE-CLiQ	• Very high data transfer rates possible • Advantages in time-critical applications • Simple and quick automatic configuration using electronic rating plates • Fast and easy diagnostics with a single tool • One interface for connecting drives as well as indirect and direct measurement systems to the CNC.
SSI	• Advantages in time-critical applications
EnDat 2.1	• High data transfer rate, bidirectional • Advantages in time-critical applications • Incremental encoder sin/cos 1 V_{pp} • Connection via SINAMICS Sensor Modules SMC/SME
PROFIBUS DP-V2	• Parameterizable built-on encoder • Reduced wiring overhead in plants with a large number of encoders • Isochronous operation and direct data exchange
PROFINET IO	• Parameterizable built-on encoder • Reduced wiring overhead in plants with a large number of encoders • Supports conformity class C (IRT communication), B, A (RT communication) • IRT (isochronous mode) • 2 ports • Media redundancy with MRPD, MRP

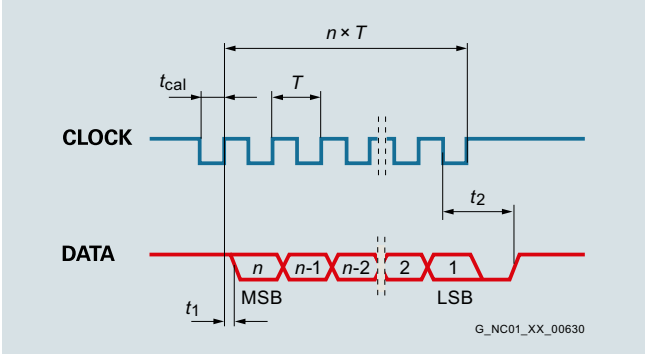

Data transfer for absolute encoders with SSI interface

n = data word length (13 bits for single-turn and 25 bits for multi-turn)
T = 1 ... 10 µs
t_{cal} = ≤ 5 µs
t_1 = ≤ 0.4 µs (without cable)
t_2 = 17 ... 20 µs

© Siemens 2022

Technical specifications

Article No.		6FX2001-5.D..-1AA0	6FX2001-5.S..	6FX2001-5.E..
Product name		Motion control encoder	Motion control encoder	Motion control encoder
Product designation		Absolute encoder with DRIVE-CLiQ	Absolute encoder with SSI	Absolute encoder with EnDat 2.1
Operating voltage DC V_p on encoder	V	24 - 15 % + 20 %	4.75 ... 30	3.6 ... 14
Current consumption, approx.				
• Single-turn	mA	37	90	90
• Multi-turn	mA	43	120	120
Interface		DRIVE-CLiQ	SSI	EnDat 2.1
Clock input		–	Differential cable receiver acc. to EIA standard RS 485	Differential cable receiver acc. to EIA standard RS 485
Data output		DRIVE-CLiQ	Differential cable driver acc. to EIA standard RS 485	Differential cable driver acc. to EIA standard RS 485
Short-circuit strength		Yes	Yes	Yes
Transfer rate	Mbps	100	–	–
Transfer rate	kHz	–	100 ... 1000	100 ... 2000
Maximum speed				
• Electrical	rpm	14000	–	–
- At ± 1 bit accuracy	rpm	–	5000	5000
- At ± 12 bit accuracy	rpm	12000	–	–
- At ± 100 bit accuracy	rpm	–	12000	12000
• Mechanical				
- Single-turn	rpm	15000	15000	15000
- Multi-turn	rpm	12000	12000	12000
Cable length to downstream electronics, maximum [1]	m (ft)	100 (328)	–	–
• Up to 300 kHz cycle	m (ft)	–	100 (328)	150 (492)
• Up to 1 MHz cycle	m (ft)	–	50 (164)	50 (164)
• Up to 2 MHz cycle	m (ft)	–	–	10 (32.8)
Connection		Radial flange outlet M12	Axial/radial flange outlet M23	Axial/radial flange outlet M23
Resolution				
• Single-turn	bit	24	13 (8192 steps)	13 (8192 steps)
• Multi-turn	bit	36 (2^{24} steps × 4096 revolutions)	25 (8192 steps × 4096 revolutions)	25 (8192 steps × 4096 revolutions)
Frame				
• Single-turn	bit	–	13 without parity	According to EnDat specification
• Multi-turn	bit	–	25 without parity	According to EnDat specification
Incremental track	S/R	2048, 1 V_{pp} (internal only)	–	512, 1 V_{pp}
Code type				
• Transfer		DRIVE-CLiQ	Gray, fir tree format	Dual
Parameterization capability				
• Preset		–	Set to zero	–
• Counting direction		–	Yes	–
Accuracy	arcsec	± 20	± 60 (with 8192 steps)	± 60 (incremental track)
Starting torque at 20 °C (68 °F)	Nm (lb_f-ft)	≤ 0.01 (0.01)	≤ 0.01 (0.01)	≤ 0.01 (0.01)

S/R = signals/revolution

[1] Observe the max. permissible cable length of the connected module.

© Siemens 2022

Technical specifications

Article No.		6FX2001-5.D..-1AA0	6FX2001-5.S..	6FX2001-5.E..
Product name		Motion control encoder	Motion control encoder	Motion control encoder
Product designation		Absolute encoder with DRIVE-CLiQ	Absolute encoder with SSI	Absolute encoder with EnDat 2.1
Solid shaft loading capacity				
• $n \leq$ 6000 rpm				
- Axial	N (lb_f)	40 (8.99)	40 (8.99)	40 (8.99)
- Radial at shaft extension	N (lb_f)	60 (13.5)	60 (13.5)	60 (13.5)
• $n >$ 6000 rpm				
- Axial	N (lb_f)	10 (2.25)	10 (2.25)	10 (2.25)
- Radial at shaft extension	N (lb_f)	20 (4.50)	20 (4.50)	20 (4.50)
Shaft diameter				
• Synchro flange	mm (in)	6 (0.24) with flat face	6 (0.24)	6 (0.24)
• Clamp flange	mm (in)	10 (0.39) with flat face	10 (0.39)	10 (0.39)
• Torque arm Hollow shaft	mm (in)	10 (0.39) or 12 (0.47)	–	–
Shaft length				
• Synchro flange	mm (in)	10 (0.39)	10 (0.39)	10 (0.39)
• Clamp flange	mm (in)	20 (0.79)	20 (0.79)	20 (0.79)
Angular acceleration, maximum	rad/s^2	10^5	10^5	10^5
Moment of inertia of rotor				
• Solid shaft	kgm^2 (lb_f-in-s^2)	2.9×10^{-6} (2.57×10^{-5})	2.9×10^{-6} (2.57×10^{-5})	2.9×10^{-6} (2.57×10^{-5})
• Hollow shaft	kgm^2 (lb_f-in-s^2)	4.6×10^{-6} (4.07×10^{-5})	–	–
Vibration (55 ... 2000 Hz) according to EN 60068-2-6				
• Solid shaft	m/s^2 (ft/s^2)	≤ 300 (984)	≤ 300 (984)	≤ 300 (984)
• Hollow shaft	m/s^2 (ft/s^2)	≤ 150 (492)	–	–
Shock according to EN 60068-2-27				
• 6 ms				
- Solid shaft	m/s^2 (ft/s^2)	≤ 2000 (6562)	≤ 2000 (6562)	≤ 2000 (6562)
- Hollow shaft	m/s^2 (ft/s^2)	≤ 1000 (3281)	–	–
Degree of protection				
• At housing		IP67	IP67	IP67
• At shaft input		IP64	IP64	IP64
Ambient temperature during				
• Operation	°C (°F)	-30 ... +100 (-22 ...+212)	-40 ... +100 (-40 ...+212)	-40 ... +100 (-40 ...+212)
Net weight				
• Single-turn	kg (lb)	0.35 (0.77)	0.35 (0.77)	0.35 (0.77)
• Multi-turn	kg (lb)	0.35 (0.77)	0.35 (0.77)	0.35 (0.77)
EMC		EMC Directive 2014/30/EC and regulations of EMC directives (applicable basic standards)		
Certificate of suitability		CE, CSA, UL	CE, CSA, UL	CE, CSA, UL

© Siemens 2022

Technical specifications

Article No.		6FX2001-5.P..	6FX2001-5.N..
Product name		Motion control encoder	Motion control encoder
Product designation		Absolute encoder with PROFIBUS DP	Absolute encoder with PROFINET IO
Operating voltage DC V_p on encoder	V	10 ... 30	10 ... 30
Current consumption, approx.			
• Single-turn	mA	300 ... 100 (2.5 W)	400 ... 130 (4 W)
• Multi-turn	mA	300 ... 100 (2.5 W)	400 ... 130 (4 W)
Interface		PROFIBUS DP-V2	PROFINET IO with RT/IRT
Clock input		Differential cable receiver acc. to EIA standard RS 485	2 ports IRT
Data output		Differential cable driver acc. to EIA standard RS 485	2 ports IRT
Short-circuit strength		Yes	Yes
Transfer rate	Mbps	12	100
LED for diagnostics		Green/red	Green/red/yellow/orange
Maximum speed			
• Electrical			
- At ± 1 bit accuracy	rpm	5000	5000
• Mechanical			
- Single-turn	rpm	12000	12000
- Multi-turn	rpm	6000	6000
Cable length to downstream electronics, maximum [1]			
• Up to 93.75 Kbps	m (ft)	1200 (3937)	–
• Up to 1.5 Mbps	m (ft)	200 (656)	–
• Up to 12 Mbps	m (ft)	100 (328)	100 (328)
Number of nodes		99	–
Connection		Terminal block with address selector switch and bus terminating resistor in removable cover with radial cable glands (3 units)	2 × M12 connectors, D-coded, 4-pole for PROFINET ports 1 × M12 connector, A-coded, 4-pole for operating voltage
• Cable diameter	mm (in)	6.5 ... 9 (0.26 ... 0.35) Removal of cover possible without interrupting bus	–
Resolution			
• Single-turn	bit	13 (8192 steps)	13 with V 4.1, 16 with V 4.2 (8192/65536 steps)
• Multi-turn	bit	27 (8192 steps × 16384 revolutions)	27 with V 4.1, 30 with V 4.2 (8192/65536 steps × 16384 revolutions)
Frame		According to PNO encoder profile V 4.1 Class 1, Class 2, Class 3, Class 4 Standard frame 81	According to PNO encoder profile V 4.1 and V 4.2 Class 1, Class 2, Class 3, Class 4 Standard frames 81/82/83/84/86/87/88/89 Siemens frame 860/862
Code type			
• Sampling		Gray	Gray
• Transfer		Binary, PROFIBUS	Binary, PROFINET
Bus load, approx.			
• At 12 Mbps per encoder	µs	20	–
Cycle time	ms	1	0.25 ... 100
Parameterization capability			
• Resolution per revolution		1 ... 8192	1 ... 8192
• Total resolution		1 ... 134217728	1 ... 134217728
• Preset		Yes	Yes
• Counting direction		Yes	Yes
• Velocity signal		Yes	Yes
• Limit switches		Yes, 2 units	No
• Isochronous mode		Yes	Yes
• Direct data exchange		Yes	No

[1] Observe the max. permissible cable length of the connected module.

© Siemens 2022

Technical specifications

Article No.		6FX2001-5.P..	6FX2001-5.N..
Product name		Motion control encoder	Motion control encoder
Product designation		Absolute encoder with PROFIBUS DP	Absolute encoder with PROFINET IO
Online parameterization		Yes	Yes
PNO certificate		Yes	Yes
Supported profiles		PNO encoder profile V 4.1	PNO encoder profile V 4.1 and V 4.2
Accuracy with 8192 steps	arcsec	± 79 (± ½ LSB)	± 79 (± ½ LSB)
Friction torque at 20 °C (68 °F)	Nm (lb_f-ft)	≤ 0.03 (0.02)	≤ 0.03 (0.02)
Starting torque at 20 °C (68 °F)	Nm (lb_f-ft)	≤ 0.03 (0.02)	≤ 0.03 (0.02)
Shaft loading capacity			
• n ≤ 6000 rpm			
- Axial	N (lb_f)	40 (8.99)	40 (8.99)
- Radial at shaft extension	N (lb_f)	110 (24.7)	110 (24.7)
• n > 6000 rpm			
- Axial	N (lb_f)	10 (2.25)	10 (2.25)
- Radial at shaft extension	N (lb_f)	20 (4.50)	20 (4.50)
Shaft diameter			
• Synchro flange	mm (in)	6 (0.24)	6 (0.24)
• Clamp flange	mm (in)	10 (0.39)	10 (0.39)
Torque arm Hollow shaft [1]	mm (in)	15 (0.59)	15 (0.59)
Shaft length			
• Synchro flange	mm (in)	10 (0.39)	10 (0.39)
• Clamp flange	mm (in)	20 (0.79)	20 (0.79)
Angular acceleration, maximum	rad/s^2	10^5	10^5
Moment of inertia of rotor			
• Solid shaft	kgm^2 (lb_f-in-s^2)	1.90×10^{-6} (1.68×10^{-5})	1.90×10^{-6} (1.68×10^{-5})
• Hollow shaft	kgm^2 (lb_f-in-s^2)	2.80×10^{-6} (2.47×10^{-5})	2.80×10^{-6} (2.47×10^{-5})
Vibration (55 ... 2000 Hz) according to EN 60068-2-6	m/s^2 (ft/s^2)	≤ 100 (328)	≤ 100 (328)
Shock according to EN 60068-2-27			
• 2 ms	m/s^2 (ft/s^2)	≤ 2000 (6562)	≤ 2000 (6562)
• 6 ms	m/s^2 (ft/s^2)	≤ 1000 (3281)	≤ 1000 (3281)
Degree of protection			
• At housing		IP67	IP67
• At shaft input		IP64	IP64
Ambient temperature during			
• Operation	°C (°F)	-40 ... +85 (-40 ... +185)	-40 ... +85 (-40 ... +185)
Net weight			
• Single-turn	kg (lb)	0.4 (0.88)	0.4 (0.88)
• Multi-turn	kg (lb)	0.5 (1.1)	0.5 (1.1)
EMC		EMC Directive 2014/30/EC and regulations of EMC directives (applicable basic standards)	
Certificate of suitability		CE, CSA, UL	CE, CSA, UL

[1] Hollow shaft diameter 12 mm, 10 mm or 8 mm (0.47 in, 0.39 in or 0.31 in) possible using supplied reduction sleeves.

© Siemens 2022

Selection and ordering data

Description	Article No.
Absolute encoders with DRIVE-CLiQ	
24 V DC supply voltage	
• Radial connection	
- Synchro flange Solid shaft	**6FX2001-5FD** ■■ **-1AA0**
- Clamp flange Solid shaft	**6FX2001-5QD** ■■ **-1AA0**
- Torque arm Hollow shaft diameter 10 mm (0.39 in)	**6FX2001-5VD** ■■ **-1AA0**
- Torque arm Hollow shaft diameter 12 mm (0.47 in)	**6FX2001-5WD** ■■ **-1AA0**
Resolution	
• Single-turn 24 bit	**1 3**
• Multi-turn 36 bit	**2 5**
Absolute encoders with SSI	
4.75 ... 30 V DC supply voltage	
• Synchro flange and connection via	
- Axial flange outlet	**6FX2001-5HS** ■■
- Radial flange outlet	**6FX2001-5FS** ■■
• Clamp flange and connection via	
- Axial flange outlet	**6FX2001-5SS** ■■
- Radial flange outlet	**6FX2001-5QS** ■■
Resolution	
• Single-turn 8192 steps/revolution (13 bit)	**1 2**
• Multi-turn 8192 steps/revolution, 4096 revolutions (25 bit)	**2 4**
Absolute encoders with EnDat 2.1	
3.6 ... 14 V DC supply voltage	
• Synchro flange and connection via	
- Axial flange outlet	**6FX2001-5HE** ■■
- Radial flange outlet	**6FX2001-5FE** ■■
• Clamp flange and connection via	
- Axial flange outlet	**6FX2001-5SE** ■■
- Radial flange outlet	**6FX2001-5QE** ■■
Resolution	
• Single-turn 8192 steps/revolution (13 bit)	**1 3**
• Multi-turn 8192 steps/revolution, 4096 revolutions (25 bit)	**2 5**

Description	Article No.
Absolute encoders with PROFIBUS DP	
10 ... 30 V DC supply voltage	
• Radial connection	
- Synchro flange Solid shaft	**6FX2001-5FP** ■■
- Clamp flange Solid shaft	**6FX2001-5QP** ■■
- Torque arm Hollow shaft diameter 15 mm (0.59 in) [1]	**6FX2001-5WP** ■■
Resolution	
• Single-turn 8192 steps/revolution (13 bit)	**1 2**
• Multi-turn 8192 steps/revolution, 16384 revolutions (27 bit)	**2 4**
Absolute encoders with PROFINET IO	
10 ... 30 V DC supply voltage	
• Radial connection	
- Synchro flange Solid shaft	**6FX2001-5FN** ■■
- Clamp flange Solid shaft	**6FX2001-5QN** ■■
- Torque arm Hollow shaft diameter 15 mm (0.59 in) [1]	**6FX2001-5WN** ■■
Resolution	
• Single-turn 8192 steps/revolution (13 bit) 65536 steps/revolution (16 bit)	**1 3**
• Multi-turn 8192 steps/revolution, 16384 revolutions (27 bit) 65536 steps/revolution, 16384 revolutions (30 bit)	**2 5**

Additional information

Since the DRIVE-CLiQ interface has been disclosed, it is possible to use absolute encoders with integrated DRIVE-CLiQ interface from a range of different manufacturers.

You can find additional information on the Internet at:

https://support.industry.siemens.com/cs/document/65402168

[1] Hollow shaft diameter 12 mm, 10 mm or 8 mm (0.47 in, 0.39 in or 0.31 in) possible using supplied reduction sleeves.

© Siemens 2022

Overview

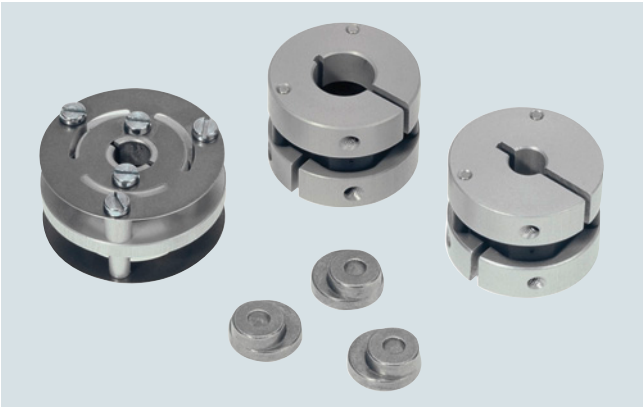

Couplings and clamps

Couplings

The motion control encoders are driven via a plug-in coupling or spring disk coupling. Alternatively, pulleys can also be used.

Clamps

Motion control encoders with Synchro flange can be axially mounted on the machine with screws or secured with 3 clamps.

Signal connectors as mating connectors

A signal connector is available as a mating connector for motion control encoders with flange outlet or with cable and connector.

The mating connector with 12 contacts is suitable for all incremental encoders.

The mating connector with 17 contacts is suitable for absolute encoders with EnDat.

Signal connector

A signal connector is available as a replacement for motion control encoders with cable and connector.

MOTION-CONNECT DRIVE-CLiQ signal cables

Pre-assembled MOTION-CONNECT DRIVE-CLiQ signal cables with M12 plug are available as basic cables and extensions for connecting motion control encoders with DRIVE-CLiQ interface.

For further information about the signal cables, refer to "MOTION-CONNECT connection systems".

Technical specifications

Article No.		6FX2001-7KF06	6FX2001-7KF10	6FX2001-7KS06	6FX2001-7KS10
Product designation		Spring disk coupling	Spring disk coupling	Plug-in coupling	Plug-in coupling
Diameter					
• 1st shaft diameter	mm (in)	6 (0.24)	6 (0.24)	6 (0.24)	10 (0.39)
• 2nd shaft diameter	mm (in)	5 (0.20)	6 (0.24)	6 (0.24)	10 (0.39)
Transferable torque, maximum	Nm (lb_f-ft)	0.8 (0.59)	0.8 (0.59)	0.7 (0.52)	0.7 (0.52)
Maximum mechanical speed	rpm	12000	12000	12000	12000
Center offset of shafts, maximum	mm (in)	0.4 (0.02)	0.4 (0.02)	0.5 (0.02)	0.5 (0.02)
Axial displacement	mm (in)	0.4 (0.02)	0.4 (0.02)	0.5 (0.02)	0.5 (0.02)
Angular displacement of shafts, maximum	°	3	3	1	1
Rigidity					
• Radial	Nm/rad (lb_f-ft/rad)	150 (111)	150 (111)	31 (22.9)	31 (22.9)
• Axial	N/mm (lb_f/mm)	6 (1.35)	6 (1.35)	10 (2.25)	10 (2.25)
Moment of inertia	$kgcm^2$ (lb_f-in-s^2)	0.019 (1.68×10^{-5})	0.019 (1.68×10^{-5})	0.02 (1.77×10^{-5})	0.02 (1.77×10^{-5})
Ambient temperature during					
• Operation	°C (°F)	-40 ... +150 (-40 ... +302)	-40 ... +150 (-40 ... +302)	-40 ... +80 (-40 ... +176)	-40 ... +80 (-40 ... +176)
Outer diameter	mm (in)	30 (1.18)	30 (1.18)	25 (0.98)	25 (0.98)
Length	mm (in)	18.3 (0.72)	18.3 (0.72)	19 (0.75)	19 (0.75)
Net weight	g (oz)	16 (0.56)	16 (0.56)	20 (0.7)	20 (0.7)

Article No.		6FX2001-7KP01
Product designation		Clamp
Outer diameter		
• 1st clamp diameter	mm (in)	9 (0.35)
• 2nd clamp diameter	mm (in)	12 (0.47)
Clamp hole diameter	mm (in)	3.2 (0.13)
Height	mm (in)	5.5 (0.22)
Net weight	g (oz)	3 (0.1)

© Siemens 2022

Selection and ordering data

Description	Article No.
Spring disk coupling	
For shaft diameter:	
• 6 mm/6 mm (0.24 in/0.24 in)	**6FX2001-7KF10**
• 6 mm/5 mm (0.24 in/0.20 in)	**6FX2001-7KF06**
Plug-in coupling	
For shaft diameter:	
• 6 mm/6 mm (0.24 in/0.24 in)	**6FX2001-7KS06**
• 10 mm/10 mm (0.39 in/0.39 in)	**6FX2001-7KS10**
Clamp (1 unit)	**6FX2001-7KP01**
For built-on encoder with Synchro flange (3 units are required.)	
Signal connector with cap nut (1 unit)	**6FX2003-0SU12**
Mating connector for incremental encoder with sin/cos 1 V_{pp}, RS422 (TTL) and HTL and absolute encoder with SSI	
12-pole, insulator each with 12 socket contacts 0.08 ... 0.22 mm^2 and 0.20 ... 0.56 mm^2, 2 × cable clamping 6.5 ... 10 mm (0.26 ... 0.39 in) and 10.1 ... 13 mm (0.40 ... 0.51 in)	
Signal connector with cap nut (1 unit)	**6FX2003-0SU17**
Mating connector for absolute encoder with EnDat	
17-pole, insulator with 17 socket contacts 0.20 ... 0.56 mm^2, 2 × cable clamping 6.5 ... 10 mm (0.26 ... 0.39 in) and 10.1 ... 13 mm (0.40 ... 0.51 in)	
Signal connector with external thread for encoders with cable (1 unit)	**6FX2003-0SA12**
Replacement connector for incremental encoders with sin/cos 1 V_{pp}, RS422 (TTL) and HTL	
12-pole, insulator with 12 pin contacts 0.20 ... 0.56 mm^2, 2 × cable clamping 6.5 ... 10 mm (0.26 ... 0.39 in) and 10.1 ... 13 mm (0.40 ... 0.51 in)	

Description	Article No.
Power connecting cable	
Pre-assembled cable for power supply of the absolute encoders with PROFINET IO with M12 plug connector and M12 plug socket, A-coded, 4-pole	
• Length 2 m (6.56 ft)	**6XV1801-5DH20**
• Length 3 m (9.84 ft)	**6XV1801-5DH30**
• Length 5 m (16.4 ft)	**6XV1801-5DH50**
• Length 10 m (32.8 ft)	**6XV1801-5DN10**
• Length 15 m (49.2 ft)	**6XV1801-5DN15**
IE connecting cable	
Pre-assembled signal cable for absolute encoders PROFINET IO with M12 plug connector and RJ45, D-coded, 4-pole	
• Length 2 m (6.56 ft)	**6XV1871-5TH20**
• Length 3 m (9.84 ft)	**6XV1871-5TH30**
• Length 5 m (16.4 ft)	**6XV1871-5TH50**
• Length 10 m (32.8 ft)	**6XV1871-5TN10**
• Length 15 m (49.2 ft)	**6XV1871-5TN15**
IE FC RJ45 Plug 145 (1 unit)	**6GK1901-1BB30-0AA0**
2 × 2 RJ45 connector with rugged metal enclosure and FC connection technology, 145° cable outlet	
IE FC M12 Plug PRO (1 unit)	**6GK1901-0DB20-6AA0**
M12 connector with metal enclosure and FC connection technology, axial cable outlet, D-coded	
IE POWER M12 CABLE CONNECTOR PRO (3 units)	**6GK1907-0DC10-6AA3**
Connection socket for connecting SCALANCE W-700/X208pro for 24 V DC supply voltage, 4-pole, A-coded, including assembly instructions	
IE FC TP Trailing Cable 2 × 2 (PROFINET Type C)	**6XV1840-3AH10**
4-wire, shielded, PROFINET-compliant, TP installation cable for use in cable carriers,	
sold by the meter Max. length 2000 m (6562 ft) Minimum order 20 m (65.6 ft)	
MOTION-CONNECT DRIVE-CLiQ signal cable [1]	**6FX.002-2DC3.-1..0**
For encoder systems with DRIVE-CLiQ and M12 connection	

[1] For complete Article No. and length code, refer to "MOTION-CONNECT connection systems".

© Siemens 2022

MOTION-CONNECT connection systems

8

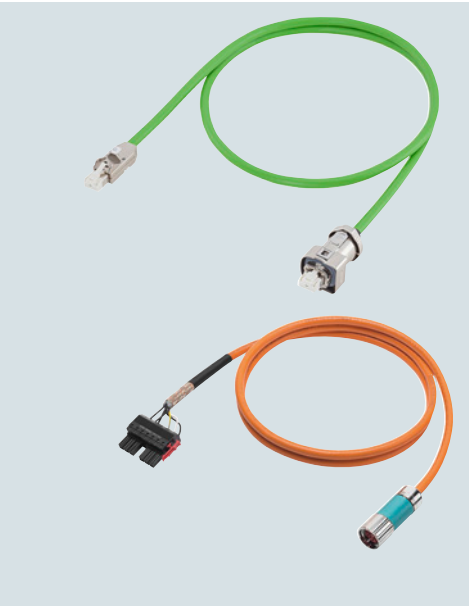

8/2 **Overview**

8/4 **Introduction**

8/7 **Power cables for SINAMICS S120**
Power cables for SIMOTICS S-1FT7/S-1FK7/M-1PH8 motors
8/9 with SPEED-CONNECT connector
8/13 with full-thread connector
8/17 Extensions for power cables with SPEED-CONNECT connector or full-thread connector
Power cables for motors
8/18 SIMOTICS M-1PH8 with terminal box
8/21 SIMOTICS L-1FN3
8/22 SIMOTICS T-1FW6

8/7 **Hybrid cables for SINAMICS S120M**
8/23 Hybrid cables for SINAMICS S120M distributed servo drive

8/24 **Signal cables for SINAMICS S120**
DRIVE-CLiQ signal cables
8/28 without 24 V DC cores
8/29 MOTION-CONNECT with 24 V DC cores
8/30 MOTION-CONNECT with 24 V DC cores with M12 connection
8/31 MOTION-CONNECT with 24 V DC cores with M17 connection
Signal cables for motors
8/32 with SPEED-CONNECT connector
8/33 with full-thread connector
Signal cables for hydraulic axes and temperature sensors
8/34 with full-thread connector

8/35 **Article number code**
8/35 Power cables
8/37 Signal cables
8/39 Length code

8/40 **Connection overviews**
8/40 SINAMICS S120 CU320-2 Control Unit
8/42 SINAMICS S120 Motor Modules
8/47 SINAMICS S120M distributed servo drive
8/48 SINAMICS S120 Power Modules
8/50 SINAMICS S120 Sensor Modules Cabinet-Mounted
8/52 SINAMICS S120 Hydraulic Linear Actor Module HLA
8/53 SINAMICS S120 Combi Power Module
8/54 SIMOTICS motors with DRIVE-CLiQ interface RJ45 or M17 and external measuring system with DRIVE-CLiQ interface M12

8/55 **Accessories for power and signal cables**
8/55 Power and signal connectors
8/56 Mounting flange
8/56 HF (high-frequency) clamp
8/57 DRIVE-CLiQ cabinet bushing (RJ45)
8/57 DRIVE-CLiQ cabinet bushing (M12)
8/58 DRIVE-CLiQ coupler

© Siemens 2022

MOTION-CONNECT connection systems
Overview

Power cables

Cable	For motor	MOTION-CONNECT 500	MOTION-CONNECT 800PLUS	Page
Dynamic requirements	SIMOTICS	Medium	High	
Environmental requirements		Medium	High	
UL/CSA		✔	✔	
Halogen-free		–		
RoHS		✔	✔	
Power cables with SPEED-CONNECT connector				
	S-1FT7	✔	✔	**8/9, 8/10**
	S-1FK7	✔	✔	**8/11**
	M-1PH808 M-1PH810	✔	✔	**8/9**
Power cables with full-thread connector				
	S-1FT7	✔	✔	**8/13 ... 8/16**
	S-1FK7	✔	✔	**8/16**
	M-1PH808 M-1PH810 M-1PH813	✔	✔	**8/13, 8/16**
	L-1FN3	–	✔	**8/21**
	T-1FW6	–	✔	**8/22**
Extensions for power cables with SPEED-CONNECT or full-thread connector				
	S-1FT7	✔	✔	**8/17**
	S-1FK7	✔	✔	**8/17**
	M-1PH808 M-1PH810 M-1PH813	✔	✔	**8/17**
	L-1FN3	–	✔	**8/21**
	T-1FW6	–	✔	**8/22**
Power cables for motors with terminal box				
	M-1PH808 M-1PH810 M-1PH813 M-1PH816	✔ from 35 mm^2	✔ up to 16 mm^2	**8/18, 8/19**

Hybrid cables for SINAMICS S120M distributed servo drive

Cable	For distributed servo drive	MOTION-CONNECT 800PLUS	Page
Dynamic requirements	SINAMICS S120M	High	
Environmental requirements		High	
UL/CSA		✔	
Halogen-free		✔	
RoHS		✔	
Hybrid cables			
	6FX8002-7HY	✔	**8/23**

✔ = Possible
– = Not possible

© Siemens 2022

Cable	For motor	MOTION-CONNECT 500	MOTION-CONNECT 800PLUS	Page
Dynamic requirements	SIMOTICS	Medium	High	
Environmental requirements		Medium	High	
UL/CSA		✔	✔	
Halogen-free		–	✔	
RoHS		✔	✔	
MOTION-CONNECT DRIVE-CLiQ signal cables				
	S-1FT7	✔	✔	**8/29**
	S-1FK7	✔	✔	**8/29**
	M-1PH8	✔	✔	**8/29**
	L-1FN3	✔	✔	**8/29**
	T-1FW6	✔	✔	**8/29**
MOTION-CONNECT DRIVE-CLiQ signal cables and extensions with M12 connection				
	Direct measuring systems with DRIVE-CLiQ M12 interface and SIMOTICS motors with M12 connection at the disconnection point	✔	✔	**8/30**
MOTION-CONNECT DRIVE-CLiQ signal cables and extensions with M17 connection				
	S-1FT7	✔	✔	**8/31**
	S-1FK7	✔	✔	**8/31**
Signal cables with SPEED-CONNECT connector				
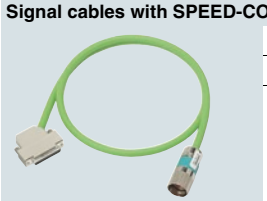	S-1FT7	✔	✔	**8/32**
	S-1FK7	✔	✔	**8/32**
	M-1PH8	✔	✔	**8/32**
Signal cables with full-thread connector				
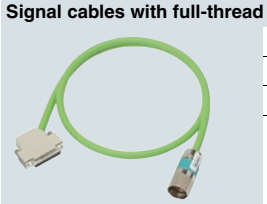	S-1FK7	✔	✔	**8/33**
	M-1PH8	✔	✔	**8/33**
	L-1FN3	–	✔	**8/33**
	T-1FW6	–	✔	**8/33**
Extensions for signal cables with SPEED-CONNECT connector and full-thread connector				
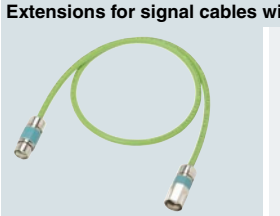		✔	✔	**8/32, 8/33**
Signal cables with full-thread connector				
	for hydraulic axes	–	✔	**8/34**
	for temperature sensor	–	✔	**8/34**

✔ = Possible
– = Not possible

© Siemens 2022

Overview

MOTION-CONNECT cables are suitable for use with many different types of machine tools and production machinery.

The following variants of MOTION-CONNECT cable are available as fully-assembled power and signal cables or sold by the meter:

- **MOTION-CONNECT 500**
  - Cost-effective solution for predominantly fixed installation
  - Suitable for low mechanical loading
  - Tested for traversing paths of to 5 m (16.4 ft)
- **MOTION-CONNECT 800PLUS**
  - Meets requirements for use in cable carriers
  - Suitable for high mechanical loading
  - Oil resistance
  - Tested for traversing paths of up to 50 m (164 ft)

Benefits

Pre-assembled MOTION-CONNECT cables provide high quality and impeccable system-tested functionality.

SPEED-CONNECT

Connectors with SPEED-CONNECT quick-release locks enable fast, stable and reliable connections. All that is required to attain stable interlocking and a secure connection is less than a quarter turn of the lock nut of the connector. Tools are not required.

Cables with SPEED-CONNECT connectors supplement the previous offering of MOTION-CONNECT cables with full-thread connectors.

Application

MOTION-CONNECT cables are intended for use in machines. They are not suitable for building technology applications or outdoor installation.

MOTION-CONNECT cables have been tested in a cable carrier with horizontal traversing paths and have also been designed for this type of application. They are not self-supporting.

The pre-assembled cables can be ordered in length units of 10 cm (3.94 in) and can be extended, if necessary.

When cable lengths (basic cables and extensions) are determined for the systems and applications described in this catalog, the technically permissible maximum cable lengths (e.g. 25 m (82 ft)) specified in the catalog must be observed. Malfunctions can occur if longer cables are used.

Siemens assumes no liability for correct transmission of signals or power in this case.

Compatibility between SPEED-CONNECT and full-thread connectors:

Connector on motor with external thread	Connector with cap nut on cable	Compatibility
SPEED-CONNECT	SPEED-CONNECT	✔
SPEED-CONNECT	Full thread	✔
Full thread	Full thread	✔
Full thread	SPEED-CONNECT	–

Function

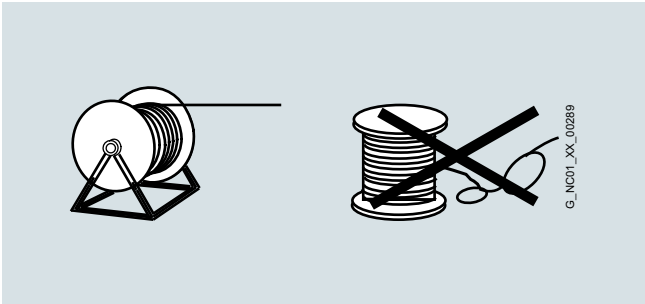

The cables must be removed from the drum without twisting, i.e., the cables must be unwound and must never be lifted over the drum flange in loops.

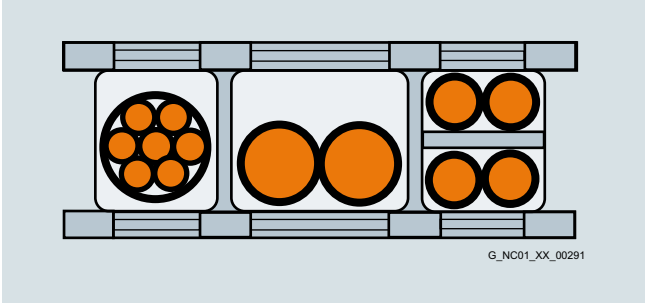

To maximize the service life of the cable carrier and cables, cables in the carrier made from different materials must be separated by spacers in the cable carrier. The spacers must be filled evenly to ensure that the position of the cables does not change during operation. The cables should be distributed as symmetrically as possible according to their weights and dimensions. Cables with very different outer diameters should also be separated by spacers.

When inserting pre-assembled cables into the cable carrier, do **not** pull at the connector, as this may damage the strain relief or cable clamping.

The cables must not be fixed in the cable carrier. They must be freely movable.

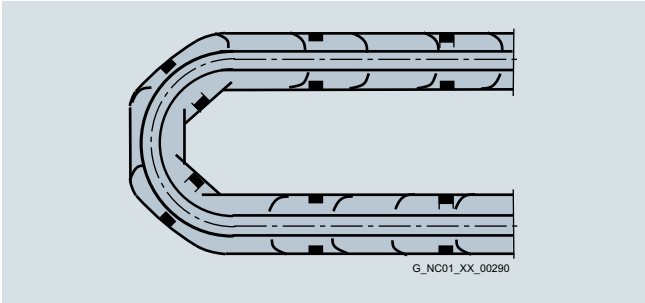

The cables must be able to be moved without applying force in particular in the bending radii of the carrier. The specified minimum bending radius must be adhered to.

The cable fixings must be attached at both ends at an appropriate distance away from the end points of the moving parts in a dead zone.

© Siemens 2022

Function (continued)

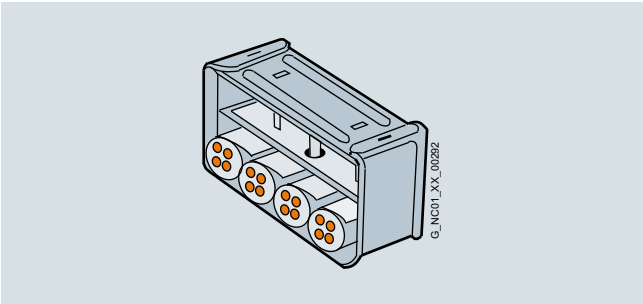

MOTION-CONNECT cables are tested in a cable carrier. The cables are attached at one end by means of strain relief to the moving ends of the cable carrier. Strain relief is applied over a wide area of the cable jacket surface without crimping the cable.

Cables must be installed in accordance with the instructions supplied by the cable carrier manufacturer.

Notes:

If, for example, pre-assembled cables are installed in a cable carrier in such a way that the connector would inhibit assembly, pre-assembled cables without assembled connector can also be supplied (power and signal cables [1]). In this case, the contacts of the cables are crimped and the connector is supplied separately. After installing the cables, the customer assembles the connector.

In case of vibration load and with horizontal or vertical cable entries, we recommend that the cable is additionally fixed if between the cable strain relief on the cable carrier and the terminal at the motor part of the cable is hanging loose or is not routed. To prevent machine vibrations being transmitted to the connectors, the cable should be fixed at the moving part where the motor is mounted.

Representation in connection overviews

Symbol	Explanation
▬——	Connector with pin contacts
›——	Connector with socket contacts
o——	Exposed core ends
- - - -	Cable must be provided by the customer

Characteristics for MOTION-CONNECT 800PLUS

The shaded area beneath the characteristic represents the potential range of use for the cables. The characteristics represent the tested operating points.

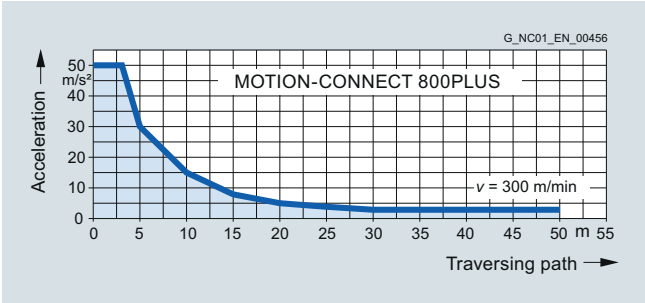

Permissible acceleration for MOTION-CONNECT 800PLUS signal and power cables up to 16 mm²

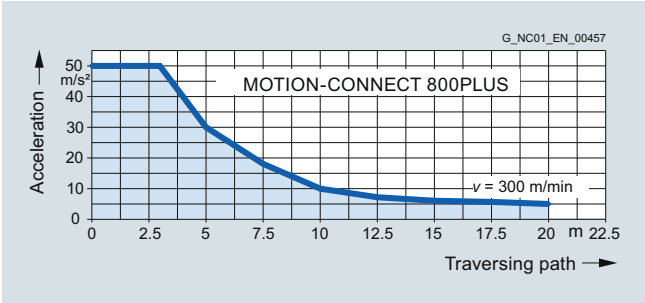

Permissible acceleration for MOTION-CONNECT 800PLUS cables of 25 mm², 35 mm² and 50 mm²

[1] Not applicable to DRIVE-CLiQ signal cables.

© Siemens 2022

More information

Current carrying capacity for power and signal cables

The current carrying capacity of PVC/PUR-insulated copper cables is specified in the table for installation types B1, B2, C, and E under continuous operating conditions with reference to an ambient air temperature of 40 °C (104 °F). For other ambient temperatures, the values must be corrected by the derating factors from the table.

Cross-section	**Current carrying capacity** rms AC 50/60 Hz or DC in amps for installation type			
	B1	**B2**	**C**	**E**
mm²	Single-core cables in conduits or installation ducts	Multi-core cables in conduits or installation ducts	Multi-core cables, vertically or horizontally on walls/open, without conduits and installation ducts/with contact	Multi-core cables, horizontally or vertically on perforated cable racks/open, without conduits and installation ducts/with contact
Electronics [1]				
0.20	–	4.3	4.4	4.4
0.50	–	7.5	7.5	7.8
0.75	–	9	9.5	10
Power [2]				
0.38	6.2	6.1	7.1	7.4
1.00	10.3	10.1	11.7	12.4
1.50	13.5	13.1	15.2	16.1
2.50	18.3	17.4	21	22
4	24	23	28	30
6	31	30	36	37
10	44	40	50	52
16	59	54	66	70
25	77	70	84	88
35	96	86	104	110
50	117	103	125	133
70	149	130	160	171
95	180	165	194	207
120	208	179	225	240

Derating factors for power and signal cables

Ambient air temperature °C (°F)	**Derating factor** according to EN 60204-1, Table D.1
30 (86)	1.15
35 (95)	1.08
40 (104)	1.00
45 (113)	0.91
50 (122)	0.82
55 (131)	0.71
60 (140)	0.58

[1] One control circuit pair.
[2] One symmetrically loaded three-phase AC cable.

© Siemens 2022

Overview

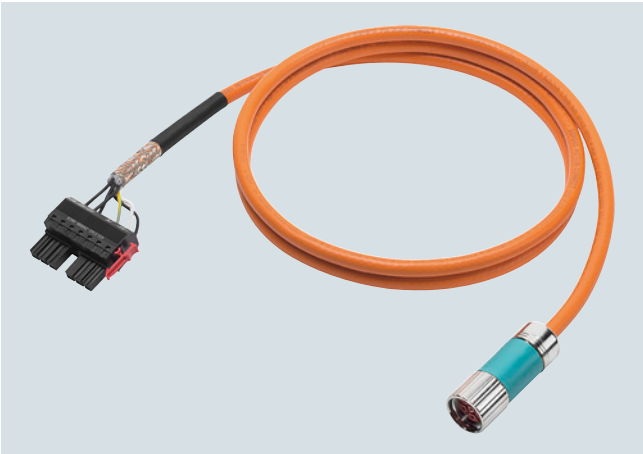

Power cable for connecting a SIMOTICS motor to a SINAMICS S120 Motor Module, C/D type 3 A to 30 A.

Power cable with separately supplied connector for connecting a SIMOTICS motor to a SINAMICS S120 Motor Module, C/D type 3 A to 30 A.

Power cables

The synchronous and asynchronous motors are connected to the Motor Modules or Power Modules by means of MOTION-CONNECT power cables.

The pre-assembled MOTION-CONNECT power cables are of high quality and offer safety with problem-free functioning.

Depending on the design, the MOTION-CONNECT power cables are either pre-assembled at one end or at both ends.

If pre-assembled power cables are to be installed in a cable carrier in such a way that the connector would inhibit assembly, pre-assembled cables without assembled connector can also be supplied. In this case, the contacts of the cables are crimped and the connector is supplied separately. After installing the cables, the customer assembles the connector.

The 6FX.002-5....-.... power cables are available with crimped contacts and with the connector supplied separately as an option (not applicable to power cables with open core ends or cable lugs).

Power cables with separately supplied **module-end** connector:
In this case, the 6th position of the Article No. must be changed from **0** to **1**: 6FX.0**1**2-5....-.... (not for power cables for SINAMICS S120 Power Modules or Motor Modules in booksize compact format).

Power cables without **module-end** connector:
In this case, the 6th position of the Article No. must be changed from **0** to **2**: 6FX.0**2**2-5....-....
The connector can be ordered separately (see page 8/55).

Power cables with separately supplied **motor-end** connector:
In this case, the 6th position of the Article No. must be changed from **0** to **4**: 6FX.0**4**2-5....-.... (not for power cables with open core ends on the motor end).

Type of delivery for pre-assembled power cables

Pre-assembled power cables can be ordered in units of 10 cm from 100 m to 299 m, depending on the cross-section.

Above 30 kg or 100 m (66.2 lb or 328 ft), the cables are supplied on drums, otherwise as coils.

Type of delivery for power cables sold by the meter

Fixed lengths

Cross-section	Brake cores	**MOTION-CONNECT 500** **MOTION-CONNECT 800PLUS**
1.5 mm^2	without/with	50 m (164 ft), 100 m (328 ft), 200 m (656 ft), 500 m (1641 ft)
2.5 mm^2	without/with	50 m (164 ft), 100 m (328 ft), 200 m (656 ft), 500 m (1641 ft)

Variable length, available in exact meter lengths

Cross-section	Brake cores	**MOTION-CONNECT 500**	**MOTION-CONNECT 800PLUS**
4 mm^2	without/with	≤ 500 m (1641 ft)	≤ 500 m (1641 ft)
6 mm^2	without/with	≤ 500 m (1641 ft)	≤ 500 m (1641 ft)
10 mm^2	without/with	≤ 500 m (1641 ft)	≤ 500 m (1641 ft)
16 mm^2	without/with	≤ 200 m (656 ft)	≤ 200 m (656 ft)
25 mm^2	without with	≤ 200 m (656 ft) ≤ 200 m (656 ft)	- ≤ 200 m (656 ft)
35 mm^2	without with	≤ 200 m (656 ft) ≤ 200 m (656 ft)	- ≤ 200 m (656 ft)
50 mm^2	without with	≤ 200 m (656 ft) ≤ 200 m (656 ft)	- ≤ 200 m (656 ft)
70 mm^2	without	≤ 100 m (328 ft)	–
95 mm^2	without	≤ 100 m (328 ft)	–
120 mm^2	without	≤ 100 m (328 ft)	–

Above 30 kg or 100 m (66.2 lb or 328 ft), the cables are supplied on drums, otherwise as coils.

Hybrid cables

Hybrid cables connect AM600 Adapter Modules to the distributed components Hybrid Cabinet Bushings, DRIVE-CLiQ Extension and SINAMICS S120M, as well as the distributed components to one another. Hybrid cables are only delivered pre-assembled.

Type of delivery for pre-assembled hybrid cables

The pre-assembled cables can be delivered in length units of 10 cm (3.94 in) up to 75 m (246 ft) to suit the system.

© Siemens 2022

Technical specifications

Power cables	MOTION-CONNECT 500 6FX50..-.....-....	MOTION-CONNECT 800PLUS 6FX80..-.....-....	MOTION-CONNECT 800PLUS[1)] 6FX8002-7HY..-....
Certificate of suitability			
• CE	Yes	Yes	Yes
• cURus or UR/CSA [1)]	UL 758, CSA-C22.2-N.210.2-M90	UL 758, CSA-C22.2-N.210.2-M90	UL 758, CSA-C22.2-N.210.2-M90
• RoHS conformity	Yes	Yes	Yes
Rated voltage U_0/U according to EN 50395			
• Power conductors	600 V/1000 V	600 V/1000 V	4 mm^2: 600 V/1000 V 2.5 mm^2: 48 V (EN), 1000 V (UL/CSA)
• Signal conductors	24 V (EN), 1000 V (UL/CSA)	24 V (EN), 1000 V (UL/CSA)	AWG22: 30 V (EN), 1000 V (UL/CSA)
Test voltage, rms			
• Power conductors	4 kV	4 kV	4 kV
• Signal conductors	2 kV	2 kV	4 kV
Operating temperature on the surface			
• Fixed installation	-20 … +80 °C (-4 ... +176 °F)	-50 … +80 °C (-58 ... +176 °F)	-50 … +80 °C (-58 ... +176 °F)
• Flexible installation	0 … 60 °C (32 ... +140 °F)	-20 … +60 °C (-4 ... +140 °F)	-20 … +60 °C (-4 ... +140 °F)
Tensile stress, max.			
• Fixed installation	50 N/mm^2 (7252 lb/in^2)	50 N/mm^2 (7252 lb/in^2)	50 N/mm^2 (7252 lb/in^2)
• Flexible installation	20 N/mm^2 (2901 lb/in^2)	20 N/mm^2 (2901 lb/in^2)	20 N/mm^2 (2901 lb/in^2)
Smallest bending radius			
• Fixed installation	5 × D_{max}	4 × D_{max}	4 × D_{max}
• Flexible installation	See selection and ordering data	See selection and ordering data	See selection and ordering data
Torsional stress	Absolute 30°/m	Absolute 30°/m	Absolute 30°/m
Bending	100000	10 million	10 million
Traversing velocity	30 m/min (98.4 ft/min)	Up to 300 m/min (984 ft/min)	Up to 300 m/min (984 ft/min)
Acceleration	2 m/s^2 (6.56 ft/s^2)	Up to 50 m/s^2 (164 ft/s^2), see characteristics on page 8/5	Up to 50 m/s^2 (164 ft/s^2), see characteristics on page 8/5
Insulation material, incl. jacket	CFC/silicone-free	CFC/halogen-free/silicone-free IEC 60754-1/DIN VDE 0472-815	CFC/halogen-free/silicone-free IEC 60754-1/DIN VDE 0472-815
Oil resistance	EN 60811-404:2012 (mineral oil only)	EN 60811-404:2012	EN 60811-404:2012
Outer jacket	PVC DESINA color orange RAL 2003	PUR, HD22.10 S2 (VDE 0282, Part 10) DESINA color orange RAL 2003	PUR, HD22.10 S2 (VDE 0282, Part 10) DESINA color orange RAL 2003
Flame-retardant	EN 60332-1-1 to 1-3	EN 60332-1-1 to 1-3	EN 60332-1-1 to 1-3

Degree of protection of the pre-assembled power cables and their extensions when closed and inserted: IP67.

.

[1)] The File No. is printed on the cable jacket.

© Siemens 2022

Selection and ordering data

For SIMOTICS S-1FT7/S-1FK7/S-1FG1/M-1PH808/M-1PH810 motors without holding brake, with SPEED-CONNECT connector on SINAMICS S120 Motor Modules in booksize format

Connection method, Motor Module end	No. of cores × cross-section	Connector size, motor end	**Pre-assembled cable without brake cores**	**Cable sold by the meter[1] without brake cores**	D_{max}		Weight (without connector)		Smallest bending radius[2]	
					6FX5	**6FX8**	**6FX5**	**6FX8**	**6FX5**	**6FX8**
	mm²		Article No.	Article No.	mm (in)	mm (in)	kg/m (lb/ft)	kg/m (lb/ft)	mm (in)	mm (in)
Connector[3]	4 × 1.5	0.5	**6FX■0■2-5CN27-....**	**6FX■008-1BB11-....**	8.4 (0.33)	9.5 (0.37)	0.12 (0.08)	0.15 (0.10)	155 (6.10)	75 (2.95)
		1	**6FX■0■2-5CN06-....**							
		1.5	**6FX■0■2-5CN26-....**							
	4 × 2.5	1	**6FX■0■2-5CN16-....**	**6FX■008-1BB21-....**	10.0 (0.39)	11.0 (0.43)	0.21 (0.14)	0.20 (0.13)	180 (7.09)	90 (3.54)
		1.5	**6FX■0■2-5CN36-....**							
	4 × 4	1.5	**6FX■0■2-5CN46-....**	**6FX■008-1BB31-....**	11.4 (0.45)	12.3 (0.48)	0.27 (0.18)	0.27 (0.18)	210 (8.27)	100 (3.94)
	4 × 6	1.5	**6FX■0■2-5CN56-....**	**6FX■008-1BB41-....**	13.6 (0.54)	14.9 (0.59)	0.37 (0.25)	0.41 (0.27)	245 (9.65)	120 (4.72)
	4 × 10	1.5	**6FX■0■2-5CN66-....**	**6FX■008-1BB51-....**	20.0 (0.79)	18.2 (0.72)	0.73 (0.49)	0.62 (0.42)	360 (14.17)	140 (5.51)
Ring cable lugs[4]	4 × 6	1.5	**6FX■002-5CN54-....**	**6FX■008-1BB41-....**	13.6 (0.54)	14.9 (0.59)	0.37 (0.25)	0.41 (0.27)	245 (9.65)	120 (4.72)
			6FX■042-5CN54-....							
	4 × 10	1.5	**6FX■002-5CN64-....**	**6FX■008-1BB51-....**	20.0 (0.79)	18.2 (0.72)	0.73 (0.49)	0.62 (0.42)	360 (14.17)	140 (5.51)
			6FX■042-5CN64-....							
	4 × 16	1.5	**6FX■002-5CN24-....**	**6FX■008-1BB61-....**	24.2 (0.95)	22.3 (0.88)	1.10 (0.74)	1.01 (0.68)	440 (17.32)	170 (6.69)
			6FX■042-5CN24-....							
Exposed core ends[5]	4 × 10	1.5	**6FX■002-5CG62-....**	**6FX■008-1BB51-....**	20.0 (0.79)	18.2 (0.72)	0.73 (0.49)	0.62 (0.42)	360 (14.17)	140 (5.51)
			6FX■042-5CG62-....							
	4 × 16	1.5	**6FX■002-5CG25-....**	**6FX■008-1BB61-....**	24.2 (0.95)	22.3 (0.88)	1.10 (0.74)	1.01 (0.68)	440 (17.32)	170 (6.69)
			6FX■042-5CG25-....							

MOTION-CONNECT 500	**5**				**5**		
MOTION-CONNECT 800PLUS	**8**				**8**		
Power cable							
Pre-assembled		**0**					
Connector at module end supplied separately		**1**					
Connector at module end not supplied		**2**					
Connector at motor end supplied separately		**4**					
Length code			**....**			**....**	

[1] Note type of delivery.
[2] Valid for installation in a cable carrier.
[3] For Motor Modules in booksize format C/D types, 3 A to 30 A.
[4] For Motor Modules in booksize format C type, 45 A and 60 A.
[5] For Motor Modules in booksize format C type, 45 A and 60 A and booksize format from 85 A. Length of core ends 250 mm (9.84 in). 5 M8 cable lugs and 5 M6 cable lugs are also included in the scope of supply of the cables.

© Siemens 2022

Selection and ordering data (continued)

For SIMOTICS S-1FT7/S-1FK7 motors with holding brake and with SPEED-CONNECT connector on SINAMICS S120 Motor Modules in booksize format

Connection method, Motor Module end	No. of cores × cross-section	Connector size, motor end	**Pre-assembled cable with brake cores**	**Cable sold by the meter**[1] **with brake cores**	D_{max}		Weight (without connector)		Smallest bending radius[2]	
					6FX5	**6FX8**	**6FX5**	**6FX8**	**6FX5**	**6FX8**
	mm²		Article No.	Article No.	mm (in)	mm (in)	kg/m (lb/ft)	kg/m (lb/ft)	mm (in)	mm (in)
Connector[3]	4 × 1.5+2 × 1.5	0.5	**6FX■0■2-5DN27-....**	**6FX■008-1BA11-....**	10.8 (0.43)	12.0 (0.47)	0.22 (0.15)	0.23 (0.16)	195 (7.68)	90 (3.54)
		1	**6FX■0■2-5DN06-....**							
		1.5	**6FX■0■2-5DN26-....**							
	4 × 2.5+2 × 1.5	1	**6FX■0■2-5DN16-....**	**6FX■008-1BA21-....**	12.4 (0.49)	13.8 (0.54)	0.25 (0.17)	0.30 (0.20)	225 (8.86)	105 (4.13)
		1.5	**6FX■0■2-5DN36-....**							
	4 × 4+2 × 1.5	1.5	**6FX■0■2-5DN46-....**	**6FX■008-1BA31-....**	14.0 (0.55)	15.2 (0.60)	0.35 (0.23)	0.38 (0.26)	255 (10.04)	115 (4.53)
	4 × 6+2 × 1.5	1.5	**6FX■0■2-5DN56-....**	**6FX■008-1BA41-....**	16.1 (0.63)	17.3 (0.68)	0.49 (0.33)	0.50 (0.34)	290 (11.42)	130 (5.12)
	4 × 10+2 × 1.5	1.5	**6FX■0■2-5DN66-....**	**6FX■008-1BA51-....**	21.7 (0.85)	20.1 (0.79)	0.81 (0.55)	0.71 (0.48)	395 (15.55)	150 (5.91)
Ring cable lugs[4]	4 × 6+2 × 1.5	1.5	**6FX■002-5DN54-....**	**6FX■008-1BA41-....**	16.1 (0.63)	17.3 (0.68)	0.49 (0.33)	0.50 (0.34)	290 (11.42)	130 (5.12)
			6FX■042-5DN54-....							
	4 × 10+2 × 1.5	1.5	**6FX■002-5DN64-....**	**6FX■008-1BA51-....**	21.7 (0.85)	20.1 (0.79)	0.81 (0.55)	0.71 (0.48)	395 (15.55)	150 (5.91)
			6FX■042-5DN64-....							

MOTION-CONNECT 500	**5**					**5**		
MOTION-CONNECT 800PLUS	**8**					**8**		
Power cable								
Pre-assembled		**0**						
Connector at module end supplied separately		**1**						
Connector at module end not supplied		**2**						
Connector at motor end supplied separately		**4**						
Length code				**....**				**....**

8

[1] Note type of delivery.
[2] Valid for installation in a cable carrier.
[3] For Motor Modules in booksize format C/D types, 3 A to 30 A.
[4] For Motor Modules in booksize format C type, 45 A and 60 A.

© Siemens 2022

Selection and ordering data (continued)

For SIMOTICS S-1FT7/S-1FK7/M-1PH808/M-1PH810 motors without holding brake, with SPEED-CONNECT connector on SINAMICS S120 Motor Modules in booksize compact format and Power Modules

Connection method, Power Module end	No. of cores × cross-section	Connector size, motor end	**Pre-assembled cable without brake cores**	**Cable sold by the meter[1] without brake cores**	D_{max}		Weight (without connector)		Smallest bending radius[2]	
					6FX5	**6FX8**	**6FX5**	**6FX8**	**6FX5**	**6FX8**
	mm²		Article No.	Article No.	mm (in)	mm (in)	kg/m (lb/ft)	kg/m (lb/ft)	mm (in)	mm (in)
Exposed core ends	4 × 1.5	1	**6FX■0■2-5CG10-....**	**6FX■008-1BB11-....**	8.4 (0.33)	9.5 (0.37)	0.12 (0.08)	0.15 (0.10)	155 (6.10)	75 (2.95)
		1.5	**6FX■0■2-5CG22-....**							
	4 × 2.5	1	**6FX■0■2-5CG12-....**	**6FX■008-1BB21-....**	10.0 (0.39)	11.0 (0.43)	0.21 (0.14)	0.20 (0.13)	180 (7.09)	90 (3.54)
		1.5	**6FX■0■2-5CG32-....**							
	4 × 4	1.5	**6FX■0■2-5CG42-....**	**6FX■008-1BB31-....**	11.4 (0.45)	12.3 (0.48)	0.27 (0.18)	0.27 (0.18)	210 (8.27)	100 (3.94)
	4 × 6	1.5	**6FX■0■2-5CG52-....**	**6FX■008-1BB41-....**	13.6 (0.54)	14.9 (0.59)	0.37 (0.25)	0.41 (0.27)	245 (9.65)	120 (4.72)
	4 × 10	1.5	**6FX■0■2-5CG62-....**	**6FX■008-1BB51-....**	20.0 (0.79)	18.2 (0.72)	0.73 (0.49)	0.62 (0.42)	360 (14.17)	140 (5.51)

MOTION-CONNECT 500	**5**			**5**		
MOTION-CONNECT 800PLUS	**8**			**8**		
Power cable						
Pre-assembled		**0**				
Connector at motor end supplied separately		**4**				
Length code			**....**			**....**

For SIMOTICS S-1FT7/S-1FK7 motors with holding brake, with SPEED-CONNECT connector on SINAMICS S120 Motor Modules in booksize compact format and Power Modules

Connection method, Power Module end	No. of cores × cross-section	Connector size, motor end	**Pre-assembled cable with brake cores**	**Cable sold by the meter[1] with brake cores**	D_{max}		Weight (without connector)		Smallest bending radius[2]	
					6FX5	**6FX8**	**6FX5**	**6FX8**	**6FX5**	**6FX8**
	mm²		Article No.	Article No.	mm (in)	mm (in)	kg/m (lb/ft)	kg/m (lb/ft)	mm (in)	mm (in)
Exposed core ends	4 × 1.5+2 × 1.5	0.5	**6FX■0■2-5DN30-....**	**6FX■008-1BA11-....**	10.8 (0.43)	12.0 (0.47)	0.22 (0.15)	0.23 (0.16)	195 (7.68)	90 (3.54)
		1	**6FX■0■2-5DG10-....**							
		1.5	**6FX■0■2-5DG22-....**							
	4 × 2.5+2 × 1.5	1	**6FX■0■2-5DG12-....**	**6FX■008-1BA21-....**	12.4 (0.49)	13.8 (0.54)	0.25 (0.17)	0.30 (0.20)	225 (8.86)	105 (4.13)
		1.5	**6FX■0■2-5DG32-....**							
	4 × 4+2 × 1.5	1.5	**6FX■0■2-5DG42-....**	**6FX■008-1BA31-....**	14.0 (0.55)	15.2 (0.60)	0.35 (0.23)	0.38 (0.26)	255 (10.04)	115 (4.53)
	4 × 6+2 × 1.5	1.5	**6FX■0■2-5DG52-....**	**6FX■008-1BA41-....**	16.1 (0.63)	17.3 (0.68)	0.49 (0.33)	0.50 (0.34)	290 (11.42)	130 (5.12)
	4 × 10+2 × 1.5	1.5	**6FX■0■2-5DG62-....**	**6FX■008-1BA51-....**	21.7 (0.85)	20.1 (0.79)	0.81 (0.55)	0.71 (0.48)	395 (15.55)	150 (5.91)

MOTION-CONNECT 500	**5**			**5**		
MOTION-CONNECT 800PLUS	**8**			**8**		
Power cable						
Pre-assembled		**0**				
Connector at motor end supplied separately		**4**				
Length code			**....**			**....**

[1] Note type of delivery.
[2] Valid for installation in a cable carrier.

© Siemens 2022

Selection and ordering data (continued)

For SIMOTICS S-1FK7 motors without holding brake, with SPEED-CONNECT connector on SINAMICS S120 Combi Power Modules

Connection method, Power Module end	No. of cores × cross-section	Connector size, motor end	**Pre-assembled cable without brake cores**	**Cable sold by the meter[1] without brake cores**	D_{max}		Weight (without connector)		Smallest bending radius[2]	
					6FX5	**6FX8**	**6FX5**	**6FX8**	**6FX5**	**6FX8**
	mm²		Article No.	Article No.	mm (in)	mm (in)	kg/m (lb/ft)	kg/m (lb/ft)	mm (in)	mm (in)
Exposed core ends	4 × 1.5	1	**6FX■002-5CF10-....**	**6FX■008-1BB11-....**	8.4 (0.33)	9.5 (0.37)	0.12 (0.08)	0.15 (0.10)	155 (6.10)	75 (2.95)
		1.5	**6FX■002-5CF14-....**							
MOTION-CONNECT 500			**5**	**5**						
MOTION-CONNECT 800PLUS			**8**	**8**						
Length code			**....**	**....**						

For SIMOTICS S-1FK7 motors with holding brake, with SPEED-CONNECT connector on SINAMICS S120 Combi Power Modules

Connection method, Power Module end	No. of cores × cross-section	Connector size, motor end	**Pre-assembled cable with brake cores**	**Cable sold by the meter[1] with brake cores**	D_{max}		Weight (without connector)		Smallest bending radius[2]	
					6FX5	**6FX8**	**6FX5**	**6FX8**	**6FX5**	**6FX8**
	mm²		Article No.	Article No.	mm (in)	mm (in)	kg/m (lb/ft)	kg/m (lb/ft)	mm (in)	mm (in)
Exposed core ends	4 × 1.5+2 × 1.5	1	**6FX■002-5DF10-....**	**6FX■008-1BA11-....**	10.8 (0.43)	12.0 (0.47)	0.22 (0.15)	0.23 (0.16)	195 (7.68)	90 (3.54)
		1.5	**6FX■002-5DF14-....**							
MOTION-CONNECT 500			**5**	**5**						
MOTION-CONNECT 800PLUS			**8**	**8**						
Length code			**....**	**....**						

[1] Note type of delivery.
[2] Valid for installation in a cable carrier.

© Siemens 2022

Selection and ordering data

For SIMOTICS S-1FT7/S-1FK7/M-1PH808/M-1PH810/M-1PH813 motors without holding brake, with full-thread connector on SINAMICS S120 Motor Modules in booksize format

Connection method, Motor Module end	No. of cores × cross-section	Connector size, motor end	**Pre-assembled cable without brake cores**	**Cable sold by the meter[1] without brake cores**	D_{max}		Weight (without connector)		Smallest bending radius[2]	
					6FX5	**6FX8**	**6FX5**	**6FX8**	**6FX5**	**6FX8**
	mm²		Article No.	Article No.	mm (in)	mm (in)	kg/m (lb/ft)	kg/m (lb/ft)	mm (in)	mm (in)
Connector[3]	4 × 1.5	1	**6FX■0■2-5CS06-....**	**6FX■008-1BB11-....**	8.4 (0.33)	9.5 (0.37)	0.12 (0.08)	0.15 (0.10)	155 (6.10)	75 (2.95)
		1.5	**6FX■0■2-5CS26-....**							
		e. c.[4]	**6FX5002-5CW02-....**							
			6FX5012-5CW02-....							
			6FX5022-5CW02-....							
	4 × 2.5	1	**6FX■0■2-5CS16-....**	**6FX■008-1BB21-....**	10.0 (0.39)	11.0 (0.43)	0.21 (0.14)	0.20 (0.13)	180 (7.09)	90 (3.54)
		1.5	**6FX■0■2-5CS36-....**							
		e. c.[4]	**6FX5002-5CW12-....**							
			6FX5012-5CW12-....							
			6FX5022-5CW12-....							
	4 × 4	1.5	**6FX■0■2-5CS46-....**	**6FX■008-1BB31-....**	11.4 (0.45)	12.3 (0.48)	0.27 (0.18)	0.27 (0.18)	210 (8.27)	100 (3.94)
		e. c.[4]	**6FX5002-5CW42-....**							
			6FX5012-5CW42-....							
			6FX5022-5CW42-....							
	4 × 6	1.5	**6FX■0■2-5CS56-....**	**6FX■008-1BB41-....**	13.6 (0.54)	14.9 (0.59)	0.37 (0.25)	0.41 (0.27)	245 (9.65)	120 (4.72)
		e. c.[4]	**6FX5002-5CW52-....**							
			6FX5012-5CW52-....							
			6FX5022-5CW52-....							
	4 × 10	1.5	**6FX■0■2-5CS66-....**	**6FX■008-1BB51-....**	20.0 (0.79)	18.2 (0.72)	0.73 (0.49)	0.62 (0.42)	360 (14.17)	140 (5.51)
		3	**6FX■0■2-5CS17-....**							
		e. c.[4]	**6FX5002-5CW62-....**							
			6FX5012-5CW62-....							
			6FX5022-5CW62-....							
Ring cable lugs[5]	4 × 6	1.5	**6FX■002-5CS54-....**	**6FX■008-1BB41-....**	13.6 (0.54)	14.9 (0.59)	0.37 (0.25)	0.41 (0.27)	245 (9.65)	120 (4.72)
			6FX■042-5CS54-....							
	4 × 10	1.5	**6FX■002-5CS64-....**	**6FX■008-1BB51-....**	20.0 (0.79)	18.2 (0.72)	0.73 (0.49)	0.62 (0.42)	360 (14.17)	140 (5.51)
			6FX■042-5CS64-....							
		3	**6FX■002-5CS14-....**							
			6FX■042-5CS14-....							
	4 × 16	1.5	**6FX■002-5CS24-....**	**6FX■008-1BB61-....**	24.2 (0.95)	22.3 (0.88)	1.10 (0.74)	1.01 (0.68)	440 (17.32)	170 (6.69)
			6FX■042-5CS24-....							
		3	**6FX■002-5CS23-....**							
			6FX■042-5CS23-....							

MOTION-CONNECT 500	**5**				**5**		
MOTION-CONNECT 800PLUS	**8**				**8**		
Power cable							
Pre-assembled		**0**					
Connector at module end supplied separately		**1**					
Connector at module end not supplied		**2**					
Connector at motor end supplied separately		**4**					
Length code			**....**			**....**	

[1] Note type of delivery.
[2] Valid for installation in a cable carrier.
[3] For Motor Modules in booksize format C/D types, 3 A to 30 A.
[4] e. c. = exposed core ends; suitable for motors with terminal box.
[5] For Motor Modules in booksize format C type, 45 A and 60 A.

© Siemens 2022

Selection and ordering data (continued)

For SIMOTICS S-1FT7/S-1FK7/M-1PH808/M-1PH810/M-1PH813 motors without holding brake, with full-thread connector on SINAMICS S120 Motor Modules in booksize format

Connection method, Motor Module end	No. of cores × cross-section	Connector size, motor end	**Pre-assembled cable without brake cores**	**Cable sold by the meter[1] without brake cores**	D_{max}		Weight (without connector)		Smallest bending radius[2]	
					6FX5	**6FX8**	**6FX5**	**6FX8**	**6FX5**	**6FX8**
	mm²		Article No.	Article No.	mm (in)	mm (in)	kg/m (lb/ft)	kg/m (lb/ft)	mm (in)	mm (in)
Exposed core ends[3]	4 × 10	1.5	**6FX■002-5CG61-....**	**6FX■008-1BB51-....**	20.0 (0.79)	18.2 (0.72)	0.73 (0.49)	0.62 (0.42)	360 (14.17)	140 (5.51)
			6FX■042-5CG61-....							
		3	**6FX■002-5CG13-....**							
			6FX■042-5CG13-....							
	4 × 16	1.5	**6FX■002-5CG24-....**	**6FX■008-1BB61-....**	24.2 (0.95)	22.3 (0.88)	1.10 (0.74)	1.01 (0.68)	440 (17.32)	170 (6.69)
			6FX■042-5CG24-....							
		3	**6FX■002-5CG23-....**							
			6FX■042-5CG23-....							

MOTION-CONNECT 500	**5**				**5**		
MOTION-CONNECT 800PLUS	**8**				**8**		
Power cable							
Pre-assembled		**0**					
Connector at module end supplied separately		**1**					
Connector at module end not supplied		**2**					
Connector at motor end supplied separately		**4**					
Length code			**....**			**....**	

[1] Note type of delivery.
[2] Valid for installation in a cable carrier.
[3] For Motor Modules in booksize format C type, 45 A and 60 A and booksize format from 85 A. Length of core ends 250 mm (9.84 in). 5 M8 cable lugs and 5 M6 cable lugs are also included in the scope of supply of the cables.

© Siemens 2022

Selection and ordering data (continued)

For SIMOTICS S-1FT7/S-1FK7 motors with holding brake, with full-thread connector on SINAMICS S120 Motor Modules in booksize format

Connection method, Motor Module end	No. of cores × cross-section	Connector size, motor end	Pre-assembled cable with brake cores	Cable sold by the meter[1] with brake cores	D_{max}		Weight (without connector)		Smallest bending radius[2]	
					6FX5	6FX8	6FX5	6FX8	6FX5	6FX8
	mm²		Article No.	Article No.	mm (in)	mm (in)	kg/m (lb/ft)	kg/m (lb/ft)	mm (in)	mm (in)
Connector[3]	4 × 1.5+2 × 1.5	0.5	6FX■0■2-5DS27-....	6FX5008-1BA11-....	10.8 (0.43)	–	0.22 (0.15)	–	195 (7.68)	–
		1	6FX■0■2-5DS06-....	6FX■008-1BA11-....	10.8 (0.43)	12.0 (0.47)	0.22 (0.15)	0.23 (0.16)	195 (7.68)	90 (3.54)
		1.5	6FX■0■2-5DS26-....							
	4 × 2.5+2 × 1.5	1	6FX■0■2-5DS16-....	6FX■008-1BA21-....	12.4 (0.49)	13.8 (0.54)	0.25 (0.17)	0.30 (0.20)	225 (8.86)	105 (4.13)
		1.5	6FX■0■2-5DS36-....							
	4 × 4+2 × 1.5	1.5	6FX■0■2-5DS46-....	6FX■008-1BA31-....	14.0 (0.55)	15.2 (0.60)	0.35 (0.23)	0.38 (0.26)	255 (10.04)	115 (4.53)
	4 × 6+2 × 1.5	1.5	6FX■0■2-5DS56-....	6FX■008-1BA41-....	16.1 (0.63)	17.3 (0.68)	0.49 (0.33)	0.50 (0.34)	290 (11.42)	130 (5.12)
	4 × 10+2 × 1.5	1.5	6FX■0■2-5DS66-....	6FX■008-1BA51-....	21.7 (0.85)	20.1 (0.79)	0.81 (0.55)	0.71 (0.48)	395 (15.55)	150 (5.91)
		3	6FX■0■2-5DS17-....							
Ring cable lugs[4]	4 × 6+2 × 1.5	1.5	6FX■002-5DS54-....	6FX■008-1BA41-....	16.1 (0.63)	17.3 (0.68)	0.49 (0.33)	0.50 (0.34)	290 (11.42)	130 (5.12)
			6FX■042-5DS54-....							
	4 × 10+2 × 1.5	1.5	6FX■002-5DS64-....	6FX■008-1BA51-....	21.7 (0.85)	20.1 (0.79)	0.81 (0.55)	0.71 (0.48)	395 (15.55)	150 (5.91)
			6FX■042-5DS64-....							
		3	6FX■002-5DS14-....							
			6FX■042-5DS14-....							
	4 × 16+2 × 1.5	3	6FX■002-5DS23-....	6FX■008-1BA61-....	25.0 (0.98)	23.8 (0.94)	1.12 (0.75)	1.03 (0.69)	450 (17.72)	180 (7.09)
			6FX■042-5DS23-....							
Exposed core ends[5]	4 × 16+2 × 1.5	3	6FX■002-5DG23-....	6FX■008-1BA61-....	25.0 (0.98)	23.8 (0.94)	1.12 (0.75)	1.03 (0.69)	450 (17.72)	180 (7.09)
			6FX■042-5DG23-....							
	4 × 25+2 × 1.5	3	6FX■002-5DG33-....	6FX■008-1BA25-....	29.4 (1.16)	27.6 (1.09)	1.62 (1.09)	1.47 (0.99)	530 (20.87)	280 (11.02)
			6FX■042-5DG33-....							
	4 × 35+2 × 1.5	3	6FX■002-5DG43-....	6FX■008-1BA35-....	32.6 (1.28)	31.9 (1.26)	2.06 (1.38)	1.92 (1.29)	590 (23.23)	320 (12.60)
			6FX■042-5DG43-....							
	4 × 50+2 × 1.5	3	6FX■002-5DG53-....	6FX■008-1BA50-....	38.0 (1.50)	35.0 (1.38)	3.04 (2.04)	2.56 (1.72)	685 (26.97)	350 (13.78)
			6FX■042-5DG53-....							

MOTION-CONNECT 500	**5**				**5**	
MOTION-CONNECT 800PLUS	**8**				**8**	
Power cable						
Pre-assembled		**0**				
Connector at module end supplied separately		**1**				
Connector at module end not supplied		**2**				
Connector at motor end supplied separately		**4**				
Length code			**....**			**....**

[1] Note type of delivery.
[2] Valid for installation in a cable carrier.
[3] For Motor Modules in booksize format C/D types, 3 A to 30 A.
[4] For Motor Modules in booksize format C type, 45 A and 60 A.
[5] For Motor Modules in booksize format C type, 45 A and 60 A and booksize format from 85 A. Length of core ends 250 mm (9.84 in) for 4 × 16 mm² and 300 mm (11.81 in) for 4 × 25 mm² to 4 × 50 mm². 5 M8 cable lugs, 5 M6 cable lugs, and 1 spring-type terminal are also included in the scope of supply of the cables.

© Siemens 2022

Selection and ordering data (continued)

For SIMOTICS S-1FT7/S-1FK7/M-1PH808/M-1PH810/M-1PH813 motors without holding brake, with full-thread connector on SINAMICS S120 Motor Modules in booksize compact format and Power Modules

Connection method, Power Module end	No. of cores × cross-section	Connector size, motor end	Pre-assembled cable without brake cores	Cable sold by the meter[1] without brake cores	D_{max}		Weight (without connector)		Smallest bending radius[2]	
					6FX5	6FX8	6FX5	6FX8	6FX5	6FX8
	mm²		Article No.	Article No.	mm (in)	mm (in)	kg/m (lb/ft)	kg/m (lb/ft)	mm (in)	mm (in)
Exposed core ends	4 × 1.5	1	6FX■0■2-5CG01-....	6FX■008-1BB11-....	8.4 (0.33)	9.5 (0.37)	0.12 (0.08)	0.15 (0.10)	155 (6.10)	75 (2.95)
		1.5	6FX■0■2-5CG21-....							
	4 × 2.5	1	6FX■0■2-5CG11-....	6FX■008-1BB21-....	10.0 (0.39)	11.0 (0.43)	0.21 (0.14)	0.20 (0.13)	180 (7.09)	90 (3.54)
		1.5	6FX■0■2-5CG31-....							
	4 × 4	1.5	6FX■0■2-5CG41-....	6FX■008-1BB31-....	11.4 (0.45)	12.3 (0.48)	0.27 (0.18)	0.27 (0.18)	210 (8.27)	100 (3.94)
	4 × 6	1.5	6FX■0■2-5CG51-....	6FX■008-1BB41-....	13.6 (0.54)	14.9 (0.59)	0.37 (0.25)	0.41 (0.27)	245 (9.65)	120 (4.72)
	4 × 10	1.5	6FX■0■2-5CG61-....	6FX■008-1BB51-....	20.0 (0.79)	18.2 (0.72)	0.73 (0.49)	0.62 (0.42)	360 (14.17)	140 (5.51)
		3	6FX■0■2-5CG13-....							
	4 × 16	3	6FX■0■2-5CG23-....	6FX■008-1BB61-....	24.2 (0.95)	22.3 (0.88)	1.10 (0.74)	1.01 (0.68)	440 (17.32)	170 (6.69)

MOTION-CONNECT 500	**5**			**5**		
MOTION-CONNECT 800PLUS	**8**			**8**		
Power cable						
Pre-assembled		**0**				
Connector at motor end supplied separately		**4**				
Length code			**....**			**....**

For SIMOTICS S-1FT7/S-1FK7 motors with holding brake, with full-thread connector on SINAMICS S120 Motor Modules in booksize compact format and Power Modules

Connection method, Power Module end	No. of cores × cross-section	Connector size, motor end	Pre-assembled cable with brake cores	Cable sold by the meter[1] with brake cores	D_{max}		Weight (without connector)		Smallest bending radius[2]	
					6FX5	6FX8	6FX5	6FX8	6FX5	6FX8
	mm²		Article No.	Article No.	mm (in)	mm (in)	kg/m (lb/ft)	kg/m (lb/ft)	mm (in)	mm (in)
Exposed core ends	4 × 1.5+2 × 1.5	0.5	6FX■0■2-5DA30-....	6FX■008-1BA11-....	10.8 (0.43)	–	0.22 (0.15)	–	195 (7.68)	–
		1	6FX■0■2-5DG01-....	6FX■008-1BA11-....	10.8 (0.43)	12.0 (0.47)	0.22 (0.15)	0.23 (0.16)	195 (7.68)	90 (3.54)
		1.5	6FX■0■2-5DG21-....							
	4 × 2.5+2 × 1.5	1	6FX■0■2-5DG11-....	6FX■008-1BA21-....	12.4 (0.49)	13.8 (0.54)	0.25 (0.17)	0.30 (0.20)	225 (8.86)	105 (4.13)
		1.5	6FX■0■2-5DG31-....							
	4 × 4+2 × 1.5	1.5	6FX■0■2-5DG41-....	6FX■008-1BA31-....	14.0 (0.55)	15.2 (0.60)	0.35 (0.23)	0.38 (0.26)	255 (10.04)	115 (4.53)
	4 × 6+2 × 1.5	1.5	6FX■0■2-5DG51-....	6FX■008-1BA41-....	16.1 (0.63)	17.3 (0.68)	0.49 (0.33)	0.50 (0.34)	290 (11.42)	130 (5.12)
	4 × 10+2 × 1.5	1.5	6FX■0■2-5DG61-....	6FX■008-1BA51-....	21.7 (0.85)	20.1 (0.79)	0.81 (0.55)	0.71 (0.48)	395 (15.55)	150 (5.91)
		3	6FX■0■2-5DG13-....							
	4 × 16+2 × 1.5	3	6FX■0■2-5DG23-....	6FX■008-1BA61-....	25.0 (0.98)	23.8 (0.94)	1.12 (0.75)	1.03 (0.69)	450 (17.72)	180 (7.09)
	4 × 25+2 × 1.5	3	6FX■0■2-5DG33-....	6FX■008-1BA25-....	29.4 (1.16)	27.6 (1.09)	1.62 (1.09)	1.47 (0.99)	530 (20.87)	280 (11.02)
	4 × 35+2 × 1.5	3	6FX■0■2-5DG43-....	6FX■008-1BA35-....	32.6 (1.28)	31.9 (1.26)	2.06 (1.38)	1.92 (1.29)	590 (23.23)	320 (12.60)
	4 × 50+2 × 1.5	3	6FX■0■2-5DG53-....	6FX■008-1BA50-....	38.0 (1.50)	35.0 (1.38)	3.04 (2.04)	2.56 (1.72)	685 (26.97)	350 (13.78)

MOTION-CONNECT 500	**5**			**5**		
MOTION-CONNECT 800PLUS	**8**			**8**		
Power cable						
Pre-assembled		**0**				
Connector at motor end supplied separately		**4**				
Length code			**....**			**....**

[1] Note type of delivery.
[2] Valid for installation in a cable carrier.

© Siemens 2022

Accessories

Extensions for power cables with SPEED-CONNECT or full-thread connector

No. of cores × cross-section		Connector size, motor end	Basic cable for motors on SINAMICS S120		**Extension**
without brake cores	with brake cores		Motor Modules in booksize format	Power Modules Motor Modules in booksize compact format	
mm^2	mm^2		Type	Type	Article No.
4 × 1.5	4 × 1.5+2 × 1.5	0.5	6FX . 002-5DS27-....	6FX . 002-5DA30-....	**6FX■002-5ME05-....**
			6FX . 002-5 . N27-....	6FX . 002-5DN30-....	**6FX■002-5MN05-....**
4 × 1.5	4 × 1.5+2 × 1.5	1	6FX . 002-5 . S06-....	6FX . 002-5 . G01-....	**6FX■002-5■A05-....**
			6FX . 002-5 . N06-....	6FX . 002-5 . G10-....	**6FX■002-5■N05-....**
		1.5	6FX . 002-5 . S26-....	6FX . 002-5 . G21-....	**6FX■002-5■A28-....**
			6FX . 002-5 . N26-....	6FX . 002-5 . G22-....	**6FX■002-5■Q28-....**
4 × 2.5	4 × 2.5+2 × 1.5	1	6FX . 002-5 . S16-....	6FX . 002-5 . G11-....	**6FX■002-5■A15-....**
			6FX . 002-5 . N16-....	6FX . 002-5 . G12-....	**6FX■002-5■Q15-....**
		1.5	6FX . 002-5 . S36-....	6FX . 002-5 . G31-....	**6FX■002-5■A38-....**
			6FX . 002-5 . N36-....	6FX . 002-5 . G32-....	**6FX■002-5■Q38-....**
4 × 4	4 × 4+2 × 1.5	1.5	6FX . 002-5 . S46-....	6FX . 002-5 . G41-....	**6FX■002-5■A48-....**
			6FX . 002-5 . N46-....	6FX . 002-5 . G42-....	**6FX■002-5■Q48-....**
4 × 6	4 × 6+2 × 1.5	1.5	6FX . 002-5 . S56-....	6FX . 002-5 . G51-....	**6FX■002-5■A58-....**
			6FX . 002-5 . S54-....	–	**6FX■002-5■A58-....**
			6FX . 002-5 . N56-....	6FX . 002-5 . G52-....	**6FX■002-5■Q58-....**
			6FX . 002-5 . N54-....	–	**6FX■002-5■Q58-....**
4 × 10	4 × 10+2 × 1.5	1.5	6FX . 002-5 . S66-....	6FX . 002-5 . G61-....	**6FX■002-5■A68-....**
			6FX . 002-5 . S64-....	–	**6FX■002-5■A68-....**
			6FX . 002-5 . N66-....	6FX . 002-5 . G62-....	**6FX■002-5■Q68-....**
			6FX . 002-5 . N64-....	–	**6FX■002-5■Q68-....**
		3[1]	6FX . 002-5 . S17-....	6FX . 002-5 . G13-....	**6FX■002-5■X18-....**
			6FX . 002-5 . S14-....	–	**6FX■002-5■X18-....**
4 × 16	4 × 16+2 × 1.5	1.5	6FX8002-5CS24-....	6FX . 002-5CG24-....	**6FX8002-5YW12-...**
			6FX . 002-5CN24-....	6FX . 002-5CG25-....	**6FX8002-5YW12-...** [1) 2)]
		3[1]	6FX . 002-5 . S23-....	6FX . 002-5 . G23-....	**6FX■002-5■X28-....**
			6FX . 002-5 . G23-....	–	**6FX■002-5■X28-....**
–	4 × 25+2 × 1.5	3[1]	6FX . 002-5DG33-....	6FX . 002-5DG33-....	**6FX■002-5DX38-....**
–	4 × 35+2 × 1.5	3[1]	6FX . 002-5DG43-....	6FX . 002-5DG43-....	**6FX■002-5DX48-....**
–	4 × 50+2 × 1.5	3[1]	6FX . 002-5DG53-....	6FX . 002-5DG53-....	**6FX■002-5DX58-....**

MOTION-CONNECT 500	**5**		
MOTION-CONNECT 800PLUS	**8**		
Without brake cores		**C**	
With brake cores		**D**	
Length code			**....**

The maximum specified cable length (basic cable and extensions) must not be exceeded. The total maximum length of power cables with brake cores is reduced by 2 m (6.56 ft) for each interruption point.

[1] Motor-end connector with full thread only.
[2] Module-end connector compatible with SPEED-CONNECT.

© Siemens 2022

Selection and ordering data

For SIMOTICS M-1PH808/M-1PH810/M-1PH813/M-1PH816 motors with terminal box on SINAMICS S120 Motor Modules

Motor	Thread	No. of cores × cross-section	Connection method Motor Module end	**Pre-assembled cable**	**Cable sold by the meter**[1]	D_{max}	Weight (without gland)	Smallest bending radius[2]
SIMOTICS		mm²		Article No.	Article No.	mm (in)	kg/m (lb/ft)	mm (in)
M-1PH808	M25	4 × 2.5	Connector[3]	**6FX80■2-5CP17-....**	**6FX8008-1BB21-....**	11.0 (0.43)	0.20 (0.13)	90 (3.54)
		4 × 4		**6FX80■2-5CP27-....**	**6FX8008-1BB31-....**	12.3 (0.48)	0.27 (0.18)	100 (3.94)
M-1PH810	M32	4 × 2.5	Connector[3]	**6FX80■2-5CP16-....**	**6FX8008-1BB21-....**	11.0 (0.43)	0.20 (0.13)	90 (3.54)
		4 × 4		**6FX80■2-5CP26-....**	**6FX8008-1BB31-....**	12.3 (0.48)	0.27 (0.18)	100 (3.94)
		4 × 10		**6FX80■2-5CP46-....**	**6FX8008-1BB51-....**	18.2 (0.72)	0.62 (0.42)	140 (5.51)
		4 × 10	Exposed core ends[4]	**6FX8002-5CR41-....**				
M-1PH813	M40	4 × 10	Connector[3]	**6FX80■2-5CP47-....**	**6FX8008-1BB51-....**	18.2 (0.72)	0.62 (0.42)	140 (5.51)
			Exposed core ends[4]	**6FX8002-5CR42-....**				
	M50	4 × 10	Connector[3]	**6FX80■2-5CP45-....**				
			Exposed core ends[4]	**6FX8002-5CR43-....**				
	M40	4 × 16	Exposed core ends[4]	**6FX8002-5CR52-....**	**6FX8008-1BB61-....**	22.3 (0.88)	1.01 (0.68)	170 (6.69)
	M50	4 × 16		**6FX8002-5CR53-....**				
		4 × 35		**6FX5002-5CR73-....**	**6FX5008-1BB35-....**	31.5 (1.24)	1.93 (1.30)	570 (22.44)
				–	**6FX8008-1BA35-....**	31.9 (1.26)	2.00 (1.34)	320 (12.60)
		4 × 50		**6FX5002-5CR83-....**	**6FX5008-1BB50-....**	38.0 (1.50)	3.04 (2.04)	685 (26.97)
				–	**6FX8008-1BA50-....**	35.0 (1.38)	2.56 (1.72)	350 (13.78)
M-1PH816	M50	4 × 16	Exposed core ends[4]	**6FX8002-5CR53-....**	**6FX8008-1BB61-....**	22.3 (0.88)	1.01 (0.68)	170 (6.69)
				–	**6FX5008-1BB61-....**	24.2 (0.95)	1.10 (0.74)	440 (17.32)
		4 × 35		**6FX5002-5CR73-....**	**6FX5008-1BB35-....**	31.5 (1.24)	1.93 (1.30)	570 (22.44)
				–	**6FX8008-1BA35-....**	31.9 (1.26)	2.00 (1.34)	320 (12.60)
		4 × 50		**6FX5002-5CR83-....**	**6FX5008-1BB50-....**	38.0 (1.50)	3.04 (2.04)	685 (26.97)
				–	**6FX8008-1BA50-....**	35.0 (1.38)	2.56 (1.72)	350 (13.78)
	M63	4 × 25		–	**6FX5008-1BB25-....**	28.0 (1.10)	1.62 (1.09)	505 (19.88)
					6FX8008-1BA25-....	27.6 (1.09)	1.51 (1.01)	280 (11.02)
		4 × 35		–	**6FX5008-1BB35-....**	31.5 (1.24)	1.93 (1.30)	570 (22.44)
					6FX8008-1BA35-....	31.9 (1.26)	2.00 (1.34)	320 (12.60)
		4 × 50		–	**6FX5008-1BB50-....**	38.0 (1.50)	3.04 (2.04)	685 (26.97)
					6FX8008-1BA50-....	35.0 (1.38)	2.56 (1.72)	350 (13.78)
		4 × 70		–	**6FX5008-1BB70-....**	42.6 (1.68)	3.96 (2.66)	770 (30.31)

MOTION-CONNECT 500	**5**				**5**		
MOTION-CONNECT 800PLUS	**8**				**8**		
Power cable							
Pre-assembled		**0**					
Connector at module end supplied separately		**1**					
Connector at module end not supplied		**2**					
Length code			**....**				**....**

[1] Note type of delivery.
[2] Valid for installation in a cable carrier.
[3] For Motor Modules in booksize format C/D types, 3 A to 30 A.
[4] For Motor Modules in booksize format C type, 45 A and 60 A and booksize format from 85 A. Length of core ends 300 mm (11.81 in). 5 M8 cable lugs and 5 M6 cable lugs are also included in the scope of supply of the cables.

© Siemens 2022

Selection and ordering data (continued)

For SIMOTICS M-1PH808/M-1PH810/M-1PH813/M-1PH816 motors with terminal box on SINAMICS S120 Power Modules

Motor	Thread	No. of cores × cross-section	Connection method Power Module end	**Pre-assembled cable**	**Cable sold by the meter**[1]	D_{max}	Weight (without gland)	Smallest bending radius[2]
SIMOTICS		mm²		Article No.	Article No.	mm (in)	kg/m (lb/ft)	mm (in)
M-1PH808	M25	4 × 2.5	Exposed core ends[3]	**6FX8002-5CR10-....**	**6FX8008-1BB21-....**	11.0 (0.43)	0.20 (0.13)	90 (3.54)
				–	**6FX5008-1BB21-....**	10.0 (0.39)	0.21 (0.14)	180 (7.09)
		4 × 4		**6FX8002-5CR20-....**	**6FX8008-1BB31-....**	12.3 (0.48)	0.27 (0.18)	100 (3.94)
				–	**6FX5008-1BB31-....**	11.4 (0.45)	0.27 (0.18)	210 (8.27)
M-1PH810	M32	4 × 2.5	Exposed core ends[3]	**6FX8002-5CR11-....**	**6FX8008-1BB21-....**	11.0 (0.43)	0.20 (0.13)	90 (3.54)
				–	**6FX5008-1BB21-....**	10.0 (0.39)	0.21 (0.14)	180 (7.09)
		4 × 4		**6FX8002-5CR21-....**	**6FX8008-1BB31-....**	12.3 (0.48)	0.27 (0.18)	100 (3.94)
				–	**6FX5008-1BB31-....**	11.4 (0.45)	0.27 (0.18)	210 (8.27)
		4 × 10		**6FX8002-5CR41-....**	**6FX8008-1BB51-....**	18.2 (0.72)	0.62 (0.42)	140 (5.51)
				–	**6FX5008-1BB51-....**	20.0 (0.79)	0.73 (0.49)	360 (14.17)
M-1PH813	M40	4 × 10	Exposed core ends[3]	**6FX8002-5CR42-....**	**6FX8008-1BB51-....**	18.2 (0.72)	0.62 (0.42)	140 (5.51)
				–	**6FX5008-1BB51-....**	20.0 (0.79)	0.73 (0.49)	360 (14.17)
	M50			**6FX8002-5CR43-....**	**6FX8008-1BB51-....**	18.2 (0.72)	0.62 (0.42)	140 (5.51)
				–	**6FX5008-1BB51-....**	20.0 (0.79)	0.73 (0.49)	360 (14.17)
	M40	4 × 16		**6FX8002-5CR52-....**	**6FX8008-1BB61-....**	22.3 (0.88)	1.01 (0.68)	170 (6.69)
				–	**6FX5008-1BB61-....**	24.2 (0.95)	1.10 (0.74)	440 (17.32)
	M50			**6FX8002-5CR53-....**	**6FX8008-1BB61-....**	22.3 (0.88)	1.01 (0.68)	170 (6.69)
				–	**6FX5008-1BB61-....**	24.2 (0.95)	1.10 (0.74)	440 (17.32)
	M40	4 × 35		**6FX5002-5CR72-....**	**6FX5008-1BB35-....**	31.5 (1.24)	1.93 (1.30)	570 (22.44)
	M50			**6FX5002-5CR73-....**	**6FX5008-1BB35-....**	31.5 (1.24)	1.93 (1.30)	570 (22.44)
				–	**6FX8008-1BA35-....**	31.9 (1.26)	2.00 (1.34)	320 (12.60)
	M50	4 × 50		**6FX5002-5CR83-....**	**6FX5008-1BB50-....**	38.0 (1.50)	3.04 (2.04)	685 (26.97)
					6FX8008-1BA50-....	35.0 (1.38)	2.56 (1.72)	350 (13.78)
M-1PH816	M50	4 × 16	Exposed core ends[3]	**6FX8002-5CR53-....**	**6FX8008-1BB61-....**	22.3 (0.88)	1.01 (0.68)	170 (6.69)
				–	**6FX5008-1BB61-....**	24.2 (0.95)	1.10 (0.74)	440 (17.32)
		4 × 35		**6FX5002-5CR73-....**	**6FX5008-1BB35-....**	31.5 (1.24)	1.93 (1.30)	570 (22.44)
				–	**6FX8008-1BA35-....**	31.9 (1.26)	2.00 (1.34)	320 (12.60)
		4 × 50		**6FX5002-5CR83-....**	**6FX5008-1BB50-....**	38.0 (1.50)	3.04 (2.04)	685 (26.97)
				–	**6FX8008-1BA50-....**	35.0 (1.38)	2.56 (1.72)	350 (13.78)
	M63	4 × 25		–	**6FX5008-1BB25-....**	28.0 (1.10)	1.62 (1.09)	505 (19.88)
					6FX8008-1BA25-....	27.6 (1.09)	1.51 (1.01)	280 (11.02)
		4 × 35		–	**6FX5008-1BB35-....**	31.5 (1.24)	1.93 (1.30)	570 (22.44)
					6FX8008-1BA35-....	31.9 (1.26)	2.00 (1.34)	320 (12.60)
		4 × 50		–	**6FX5008-1BB50-....**	38.0 (1.50)	3.04 (2.04)	685 (26.97)
					6FX8008-1BA50-....	35.0 (1.38)	2.56 (1.72)	350 (13.78)
		4 × 70		-	**6FX5008-1BB70-....**	42.6 (1.68)	3.96 (2.66)	770 (30.31)

MOTION-CONNECT 500	**5**				**5**		
MOTION-CONNECT 800PLUS	**8**				**8**		
Length code			**....**				**....**

[1] Note type of delivery.
[2] Valid for installation in a cable carrier.
[3] Length of core ends: 300 mm (11.81 in). 4 M8 cable lugs and 4 M6 cable lugs are also included in the scope of supply of the cables.

© Siemens 2022

Selection and ordering data (continued)

For SIMOTICS M-1PH808/M-1PH810 motors with terminal box on SINAMICS S120 Motor Modules in booksize compact format

Motor	Thread	No. of cores × cross-section	Connection method Power Module end	**Pre-assembled cable**	**Cable sold by the meter**[1]	D_{max}	Weight (without gland)	Smallest bending radius[2]
SIMOTICS		mm²		Article No.	Article No.	mm (in)	kg/m (lb/ft)	mm (in)
M-1PH808	M25	4 × 2.5	Exposed core ends[3]	**6FX8002-5CR10-....**	**6FX8008-1BB21-....**	11.0 (0.43)	0.20 (0.13)	90 (3.54)
M-1PH810	M32	4 × 2.5	Exposed core ends[3]	**6FX8002-5CR11-....**	**6FX8008-1BB21-....**	11.0 (0.43)	0.20 (0.13)	90 (3.54)

MOTION-CONNECT 500	**5**			**5**		
MOTION-CONNECT 800PLUS	**8**			**8**		
Length code			**....**			**....**

For SIMOTICS M-1PH808/-1PH810/-1PH813 motors with terminal box on SINAMICS S120 Combi Power Modules

Motor	Thread	No. of cores × cross-section	Connection method Power Module end	**Pre-assembled cable**	**Cable sold by the meter**[1]	D_{max}		Weight (without gland)		Smallest bending radius[2]	
						6FX5	**6FX8**	**6FX5**	**6FX8**	**6FX5**	**6FX8**
SIMOTICS		mm²		Article No.	Article No.	mm (in)	mm (in)	kg/m (lb/ft)	kg/m (lb/ft)	mm (in)	mm (in)
M-1PH808	M25	4 × 2.5	Exposed core ends[3]	**6FX■002-5CE02-....**	**6FX8008-1BB21-....**	11.0 (0.43)	11.0 (0.43)	0.21 (0.14)	0.23 (0.16)	180 (7.09)	90 (3.54)
M-1PH810	M32	4 × 4	Exposed core ends[3]	**6FX■002-5CE04-....**	**6FX8008-1BB31-....**	11.4 (0.45)	12.3 (0.48)	0.27 (0.18)	0.31 (0.21)	210 (8.27)	100 (3.94)
M-1PH813	M40	4 × 6	Exposed core ends[3]	**6FX■002-5CE06-....**	**6FX8008-1BB41-....**	20.0 (0.79)	15.1 (20.2)	0.37 (0.25)	0.42 (0.28)	245 (9.65)	120 (4.72)

MOTION-CONNECT 500	**5**				**5**	
MOTION-CONNECT 800PLUS	**8**				**8**	
Length code			**....**			**....**

Other cables sold by the meter for SIMOTICS M-1PH818/M-1PH822/M-1PH835 motors with terminal box

	No. of cores × cross-section	Connection method Motor Module end	**Pre-assembled cable**	**Cable sold by the meter**[1]	D_{max}	Weight (without gland)	Smallest bending radius[2]
	mm²		Article No.	Article No.	mm (in)	kg/m (lb/ft)	mm (in)
	4 × 95		–	**6FX5008-1BB05-....**	51.7 (2.04)	5.55 (3.73)	935 (36.81)
	4 × 120		–	**6FX5008-1BB12-....**	56 (2.20)	6.60 (4.43)	1010 (39.76)

MOTION-CONNECT 500	**5**	
Length code		**....**

[1] Note type of delivery.
[2] Valid for installation in a cable carrier.
[3] Length of core ends: 300 mm (11.81 in). 4 M8 cable lugs and 4 M6 cable lugs are also included in the scope of supply of the cables.

© Siemens 2022

Selection and ordering data

For SIMOTICS L-1FN3 linear motors, peak/continuous load versions, connection to SINAMICS S120 through adapter cable with full-thread connector

No. of cores × cross-section	Thread	**Pre-assembled adapter cable**	Connector size interface	**Pre-assembled basic cable to the drive system**	**Cable sold by the meter**[1] **for pre-assembled adapter cable**	D_{max}	Weight (without connector)	Smallest bending radius[2]
mm²		Article No.[3]		Article No.	Article No.	mm (in)	kg/m (lb/ft)	mm (in)
4 × 2.5	M20	**6FX7002-5LM42-....** [4]	1	**6FX80■2-5CS16-....**	**6FX8008-1BB21-....**	11.0 (0.43)	0.20 (0.13)	90 (3.54)
4 × 2.5	M20	**6FX7002-5LM62-....** [5]	1	**6FX80■2-5CS16-....**	**6FX8008-1BB21-....**	11.0 (0.43)	0.20 (0.13)	90 (3.54)
4 × 4	M32	**6FX7002-5LM72-....**	1.5	**6FX80■2-5CS46-....** [6]	**6FX8008-1BB31-....**	12.3 (0.48)	0.27 (0.18)	100 (3.94)
4 × 6	M32	**6FX7002-5LM82-....**	1.5	**6FX8002-5CS54-....**	**6FX8008-1BB41-....**	14.9 (0.59)	0.41 (0.27)	120 (4.72)
4 × 10	M32	**6FX7002-5LM32-....**	1.5	**6FX8002-5CS64-....**	**6FX8008-1BB51-....**	18.2 (0.72)	0.62 (0.42)	140 (5.51)
4 × 16	M32	**6FX7002-5LM02-....**	1.5	**6FX8002-5CS24-....**	**6FX8008-1BB61-....**	22.3 (0.88)	1.01 (0.68)	170 (6.69)

MOTION-CONNECT 700	**7**								
MOTION-CONNECT 800PLUS				**8**				**8**	
Power cable									
Pre-assembled					**0**				
Connector at module end supplied separately					**1**				
Connector at module end not supplied					**2**				
Connector at motor end supplied separately					**4**				
Length code		**....**					**....**		**....**

Accessories

Power cable extensions for SIMOTICS L-1FN3 linear motors, peak/continuous load versions with full-thread connector

No. of cores × cross-section	Connector size	Pre-assembled basic cable to the drive system	**Extension**
mm²		Type	Article No.
4 × 2.5	1	6FX8002-5CS16-....	**6FX8002-5CA15-....**
4 × 4	1.5	6FX8002-5CS46-.... [6]	**6FX8002-5CA48-....**
4 × 6	1.5	6FX8002-5CS54-....	**6FX8002-5CA58-....**
4 × 10	1.5	6FX8002-5CS64-....	**6FX8002-5CA68-....**
4 × 16	1.5	6FX8002-5CS24-....	**6FX8002-5YW12-....**

MOTION-CONNECT 800PLUS	**8**	
Length code		**....**

The combinations of power cable extensions shown are only provided by way of example.

[1] Note type of delivery.
[2] Valid for installation in a cable carrier.
[3] The 6FX7002-5LM.. cables comprise MOTION-CONNECT 800PLUS cables which are sold by the meter.
[4] For SIMOTICS L-1FN30/-1FN31 motors only.
[5] For SIMOTICS L-1FN33/-1FN34/-1FN36/-1FN39 motors only.
[6] For SIMOTICS L-1FN3 linear motors in the peak load version, the pre-assembled basic cable 6FX8002-5CS54-.... (4 × 6 mm²) to the SINAMICS S120 drive system must be used.

© Siemens 2022

Selection and ordering data

For SIMOTICS T-1FW6 built-in torque motors with connection via adapter cable with full-thread connector

No. of cores × cross-section	Connector size, motor end	**Pre-assembled cable to the drive system**	**Cable sold by the meter**[1]	D_{max}	Weight (without connector)	Smallest bending radius[2]
mm²		Article No.	Article No.	mm (in)	kg/m (lb/ft)	mm (in)
4 × 2.5	1	**6FX80■2-5CS16-....**	**6FX8008-1BB21-....**	11.0 (0.43)	0.20 (0.13)	90 (3.54)
4 × 4	1.5	**6FX80■2-5CS46-....**	**6FX8008-1BB31-....**	12.3 (0.48)	0.27 (0.18)	100 (3.94)
4 × 6	1.5	**6FX8002-5CS54-....**	**6FX8008-1BB41-....**	14.9 (0.59)	0.41 (0.27)	120 (4.72)
		6FX8042-5CS54-....				
4 × 10	1.5	**6FX8002-5CS64-....**	**6FX8008-1BB51-....**	18.2 (0.72)	0.62 (0.42)	140 (5.51)
		6FX8042-5CS64-....				
4 × 16	1.5	**6FX8002-5CS24-....**	**6FX8008-1BB61-....**	22.3 (0.88)	1.01 (0.68)	170 (6.69)
		6FX8042-5CS24-....				

MOTION-CONNECT 800PLUS	**8**				**8**	
Power cable						
Pre-assembled		**0**				
Connector at module end supplied separately		**1**				
Connector at module end not supplied		**2**				
Connector at motor end supplied separately		**4**				
Length code			**....**			**....**

Accessories

Power cable extensions for SIMOTICS T-1FW6 built-in torque motors with full-thread connector

No. of cores × cross-section	Connector size	Pre-assembled cable to the drive system	**Extension**
mm²		Type	Article No.
4 × 2.5	1	6FX8002-5CS16-....	**6FX8002-5CA15-....**
4 × 4	1.5	6FX8002-5CS46-....	**6FX8002-5CA48-....**
4 × 6	1.5	6FX8002-5CS54-....	**6FX8002-5CA58-....**
4 × 10	1.5	6FX8002-5CS64-....	**6FX8002-5CA68-....**
4 × 16	1.5	6FX8002-5CS24-....	**6FX8002-5YW12-....**

MOTION-CONNECT 800PLUS	**8**	
Length code		**....**

The combinations of power cable extensions shown are only provided by way of example.

[1] Note type of delivery.
[2] Valid for installation in a cable carrier.

© Siemens 2022

Selection and ordering data

For SINAMICS S120M distributed servo drive with AM600 adapter module

Connection method SINAMICS S120M	No. of cores × cross-section	for outgoing directions	**Pre-assembled cable**	D_{max}	Weight (without connector)	Smallest bending radius[1]
	mm²/AWG		Article No.	mm (in)	kg/m (lb/ft)	mm (in)
Connector	4 × 2.5+ 3 × 4+ 4 × AWG22	Non-drive end (rear)/ Non-drive end (rear)	**6FX8002-7HY00-....**	15 (0.59)	0.35 (0.23)	112.5 (4.43)
		Non-drive end (rear)/ drive end (front)	**6FX8002-7HY11-....**			
		Drive end (front)/ drive end (front)	**6FX8002-7HY22-....**			

MOTION-CONNECT 800PLUS	**8**	
Length code		**....**

[1] Valid for installation in a cable carrier.

© Siemens 2022

Overview

MOTION-CONNECT DRIVE-CLiQ signal cable with IP20/IP67 connector

Signal cables are pre-assembled and are sold by the meter for the connection of a variety of components.

The following different types of cable are available:

- DRIVE-CLiQ signal cable
- MOTION-CONNECT DRIVE-CLiQ signal cables
- MOTION-CONNECT pre-assembled signal cables

Type of delivery for pre-assembled signal cables

Pre-assembled signal cables are available in units of 10 cm (3.94 in).

Above 30 kg or 100 m (66.2 lb or 328 ft), the cables are supplied on drums, otherwise as coils.

Usage	Connection Module end/Motor end	24 V cores	MOTION-CONNECT 200 6FX2...	MOTION-CONNECT 500 6FX5...	MOTION-CONNECT 800PLUS 6FX8...	Length stages
DRIVE-CLiQ signal cables						
Components with DRIVE-CLiQ interface, with internal or external 24 V DC power supply in the control cabinet	RJ45 IP20/RJ45 IP20	Without	≤ 70 m (230 ft)	–	–	To the decimeter
Components with DRIVE-CLiQ interface in the control cabinet	RJ45 IP20/RJ45 IP20	With	–	≤ 100 m (328 ft)	≤ 75 m (246 ft)	To the decimeter
For built-in or built-on encoder systems with DRIVE-CLiQ interface.	RJ45 IP20/RJ45 IP67	With				
	RJ45 IP67/RJ45 IP67					
Basic cable	RJ45 IP20/M17	With				
Extension	M17/M17					
Adapter cable	RJ45 IP67/M17					
	M17/RJ45 IP67					
Basic cable	RJ45 IP20/M12	With	–	≤ 100 m (328 ft)	≤ 75 m (246 ft)	To the meter up to 20 m (65.6 ft), beyond that in steps of 5 m (16.4 ft)
Extension	M12/M12					
Adapter cable	RJ45 IP67/M12			≤ 30 m (98.4 ft)	≤ 30 m (98.4 ft)	
	M12/RJ45 IP67					
	M17/M12					

© Siemens 2022

Application

DRIVE-CLiQ signal cables without 24 V DC cores

are used to connect components with DRIVE-CLiQ connections which have a separate or external 24 V DC power supply.

MOTION-CONNECT DRIVE-CLiQ signal cables without 24 V DC cores

are used whenever components with DRIVE-CLiQ connections must meet high requirements such as mechanical stress and oil resistance, e.g. where a connection is made outside the cabinet between Power Modules, Motor Modules, and SIMOTICS S-1FK7/SIMOTICS M-1PH8 with DRIVE-CLiQ interface.

MOTION-CONNECT pre-assembled signal cables

are used whenever motor encoders on motors without DRIVE-CLiQ interface need to be connected to Sensor Modules.

Design

If pre-assembled signal cables are to be installed in a cable carrier in such a way that the connector would inhibit assembly, pre-assembled cables without assembled connector can also be supplied. In this case, the contacts of the cables are crimped and the connector enclosure is supplied separately. After installing the cables, the customer assembles the connector enclosure.

The 6FX.002-2....-.... signal cables are available with crimped contacts and with the connector enclosure supplied separately (not in the case of DRIVE-CLiQ signal cables and signal cables with exposed core ends).

Signal cables with separately supplied **module-end** connector enclosure: In this case, the 6th position of the Article No. must be changed from **0** to **1**:
6FX.0**1**2-2C...-.... (not for signal cables for connecting via terminals or 6FX.002-2AH00-...., 6FX.002-2CA12-....).

Signal cables with separately supplied **motor-end** connector enclosure: In this case, the 6th position of the Article No. must be changed from **0** to **4**:
6FX.0**4**2-2C...-.... (not for signal cables for connecting via terminals or 6FX8002-2BA20-...., 6FX8002-2BA21-....).

Note:

Once the contacts have latched into the insulator, they can no longer be removed.

© Siemens 2022

Technical specifications

DRIVE-CLiQ signal cables	DRIVE-CLiQ 6FX2...-1DC..-....	DRIVE-CLiQ MOTION-CONNECT 500 6FX5...-.DC..-....	DRIVE-CLiQ MOTION-CONNECT 800PLUS 6FX8...-.DC..-....
Certificate of suitability			
• CE	Yes	Yes	Yes
• cURus or UR/CSA [1]	UL STYLE 2502/CSA-N.210.2-M90	UL STYLE 2502/CSA-N.210.2-M90	UL STYLE 20236/CSA-N.210.2-M90
• RoHS conformity	Yes	Yes	Yes
Rated voltage according to EN 50395	30 V	30 V	30 V
Test voltage, rms	500 V	500 V	500 V
Operating temperature on the surface			
• Fixed installation	-20 … +80 °C (-4 ... +176 °F)	-20 … +80 °C (-4 ... +176 °F)	-20 … +80 °C (-4 ... +176 °F)
• Flexible installation	–	0 … 60 °C (32 ... 140 °F)	-20 … +60 °C (-4 ... +140 °F)
Tensile stress, max.			
• Fixed installation	45 N/mm^2 (6526 lb/in^2)	80 N/mm^2 (11603 lb/in^2)	50 N/mm^2 (7252 lb/in^2)
• Flexible installation	–	30 N/mm^2 (4351 lb/in^2)	20 N/mm^2 (2901 lb/in^2)
Smallest bending radius			
• Fixed installation	50 mm (1.97 in)	35 mm (1.38 in)	35 mm (1.38 in)
• Flexible installation	–	125 mm (4.92 in)	75 mm (2.95 in)
Torsional stress	–	Absolute 30°/m	Absolute 30°/m
Bending	–	100000	10 million
Traversing velocity	–	30 m/min (98.4 ft/min)	300 m/min (984 ft/min)
Acceleration	–	2 m/s^2 (6.56 ft/s^2)	Up to 50 m/s^2 (164 ft/s^2), see characteristics on page 8/5
Insulation material, incl. jacket	CFC/silicone-free	CFC/silicone-free	CFC/halogen-free/silicone-free IEC 60754-1/DIN VDE 0472-815
Oil resistance	EN 60811-404:2012	EN 60811-404:2012 (mineral oil only)	EN 60811-404:2012
Outer jacket	PVC Gray RAL 7032	PVC DESINA color green RAL 6018	PUR, HD22.10 S2 (VDE 0282, Part 10) DESINA color green RAL 6018
Flame-retardant	EN 60332-1-1 to 1-3	EN 60332-1-1 to 1-3	EN 60332-1-1 to 1-3

Degree of protection of the pre-assembled signal cables and their extensions when closed and inserted: IP67.

8

[1] The File No. is printed on the cable jacket.

© Siemens 2022

Technical specifications (continued)

Signal cables	MOTION-CONNECT 500 6FX50..-.....-....	MOTION-CONNECT 800PLUS 6FX80..-.....-....
Certificate of suitability		
• CE	Yes	Yes
• cURus or UR/CSA [1]	UL758-CSA-C22.2-N.210.2-M90	UL758-CSA-C22.2-N.210.2-M90
• RoHS conformity	Yes	Yes
Rated voltage according to EN 50395	30 V	30 V
Test voltage, rms	500 V	500 V
Operating temperature on the surface		
• Fixed installation	-20 … +80 °C (-4 ... +176 °F)	-50 … +80 °C (-58 ... +176 °F)
• Flexible installation	0 … 60 °C (32 ... 140 °F)	-20 … +60 °C (-4 ... +140 °F)
Tensile stress, max.		
• Fixed installation	50 N/mm^2 (7252 lb/in^2)	50 N/mm^2 (7252 lb/in^2)
• Flexible installation	20 N/mm^2 (2901 lb/in^2)	20 N/mm^2 (2901 lb/in^2)
Smallest bending radius		
• Fixed installation	60 mm (2.36 in)	4 × D_{max}
• Flexible installation	100 mm (3.94 in)	70 mm (2.76 in) [2]
Torsional stress	Absolute 30°/m	Absolute 30°/m
Bending	2 Mio.	10 million
Traversing velocity	180 m/min (591 ft/min)	Up to 300 m/min (984 ft/min)
Acceleration	5 m/s^2 (16.4 ft/s^2)	Up to 50 m/s^2 (164 ft/s^2), see characteristics on page 8/5
Insulation material, incl. jacket	CFC/silicone-free	CFC/halogen-free/silicone-free IEC 60754-1/DIN VDE 0472-815
Oil resistance	EN 60811-404:2012 (mineral oil only)	EN 60811-404:20122
Outer jacket	PVC DESINA color green RAL 6018	PUR, HD22.10 S2 (VDE 0282, Part 10) DESINA color green RAL 6018
Flame-retardant	EN 60332-1-1 to 1-3	EN 60332-1-1 to 1-3

Degree of protection of the pre-assembled signal cables and their extensions when closed and inserted: IP67.

8

[1] The File No. is printed on the cable jacket.
[2] Exception: 6FX8002-2SL..-....; smallest bending radius (flexible): 85 mm (3.35 in).

© Siemens 2022

Selection and ordering data

Pre-assembled DRIVE-CLiQ signal cables without 24 V DC cores

Version	Length	D_{max}	Module-end connector/ degree of protection	Motor-end connector/ degree of protection	**DRIVE-CLiQ signal cable** without 24 V DC cores
	m (ft)	mm (in)			Article No.
Fixed lengths	0.11 (0.36)		RJ45/IP20	RJ45/IP20	**6SL3060-4AB00-0AA0**
	0.16 (0.52)				**6SL3060-4AD00-0AA0**
	0.21 (0.69)				**6SL3060-4AF00-0AA0**
	0.26 (0.85)				**6SL3060-4AH00-0AA0**
	0.31 (1.02)				**6SL3060-4AK00-0AA0**
	0.36 (1.18)				**6SL3060-4AM00-0AA0**
	0.41 (1.35)				**6SL3060-4AP00-0AA0**
	0.60 (1.97)				**6SL3060-4AU00-0AA0**
	0.95 (3.12)				**6SL3060-4AA10-0AA0**
	1.20 (3.94)				**6SL3060-4AW00-0AA0**
	1.45 (4.76)				**6SL3060-4AF10-0AA0**
	2.10 (6.89)				**6SL3060-4AB20-0AA0**
	2.40 (7.87)				**6SL3060-4AE20-0AA0**
	2.80 (9.19)				**6SL3060-4AJ20-0AA0**
	5.00 (16.4)				**6SL3060-4AA50-0AA0**
To the decimeter	max. 70 (230)	7.0 (0.28)	RJ45/IP20	RJ45/IP20	**6FX2002-1DC00-....**
Length code					**....**

© Siemens 2022

Selection and ordering data

Pre-assembled MOTION-CONNECT DRIVE-CLiQ signal cables for SINAMICS S120 and motors with 24 V DC cores

Version	Usage	Length, max.	D_{max}	Module-end connector/ degree of protection	Motor-end connector/ degree of protection	**MOTION-CONNECT DRIVE-CLiQ signal cable** with 24 V DC cores
		m (ft)	mm (in)			Article No.
To the decimeter	For components with DRIVE-CLiQ interface in the control cabinet. For example, for making the connection between SINAMICS S120 Motor Modules or Power Modules and the DRIVE-CLiQ cabinet bushing.	100 (328)	7.1 (0.28)	RJ45/IP20	RJ45/IP20	**6FX5002-2DC00-....**
		75 (246)	7.1 (0.28)	RJ45/IP20	RJ45/IP20	**6FX8002-2DC00-....**
To the decimeter	For built-in or built-on encoder systems with DRIVE-CLiQ interface. For example, for making the connection between SIMOTICS S-1FT7/-1FK7/ SIMOTICS M-1PH8/SIMOTICS T-1FW3 and SINAMICS S120 Motor Modules or Power Modules.	100 (328)	7.1 (0.28)	RJ45/IP20	RJ45/IP67	**6FX5002-2DC10-....**
		75 (246)	7.1 (0.28)	RJ45/IP20	RJ45/IP67	**6FX8002-2DC10-....**
To the decimeter	For built-in or built-on encoder systems with DRIVE-CLiQ interface. For example, for making the connection between SIMOTICS S-1FT7/-1FK7/ SIMOTICS M-1PH8/ SIMOTICS T-1FW3 and SINAMICS S120 via DRIVE-CLiQ cabinet bushings, couplers or DME20, or 2 couplers or DME20.	100 (328)	7.1 (0.28)	RJ45/IP67	RJ45/IP67	**6FX5002-2DC20-....**
		75 (246)	7.1 (0.28)	RJ45/IP67	RJ45/IP67	**6FX8002-2DC20-....**

MOTION-CONNECT 500	**5**	
MOTION-CONNECT 800PLUS	**8**	
Length code		**....**

© Siemens 2022

Selection and ordering data

Pre-assembled MOTION-CONNECT DRIVE-CLiQ signal cables with 24 V DC cores for SINAMICS S120 and direct measuring systems with M12 connection or SIMOTICS motors with M12 connection at the disconnection point

Version	SIMOTICS motor/ encoder Usage	Length, max. m (ft)	D_{max} mm (in)	Module-end connector/ degree of protection	Encoder/ motor-end connector/ degree of protection	**Basic cable** Article No.	**Extension** Article No.
Basic cable between encoder and SINAMICS S120 Motor Module or Power Module							
To the meter [1]	Absolute encoders with DRIVE-CLiQ interface and M12 connection	100 (328)	7.1 (0.28)	RJ45/IP20	M12/IP67 [2]	**6FX5002-2DC30-....**	**6FX5002-2DC34-....**
		75 (246)	7.1 (0.28)	RJ45/IP20	M12/IP67 [2]	**6FX8002-2DC30-....**	**6FX8002-2DC34-....**
	Non-Siemens direct measuring systems with DRIVE-CLiQ interface and M12 connection						
Extension for all cables with M12 connection							
To the meter [1]		30 (98.4)	7.1 (0.28)	M12/IP67 [2]	M12/IP67 [2]	**6FX5002-2DC34-....**	**6FX5002-2DC34-....**
		30 (98.4)	7.1 (0.28)	M12/IP67 [2]	M12/IP67 [2]	**6FX8002-2DC34-....**	**6FX8002-2DC34-....**
Adapter cable between SIMOTICS motor with DRIVE-CLiQ RJ45 interface and disconnection point with M12 connection							
To the meter [1]	S-1FT7/-1FK7 M-1PH8	30 (98.4)	7.1 (0.28)	M12/IP67 [2]	RJ45/IP67 [3]	**6FX8002-2DC38-....**	**6FX8002-2DC34-....**
Adapter cable between encoder with DRIVE-CLiQ M12 interface and disconnection point with M17 connection							
To the meter [1]		100 (328)	7.1 (0.28)	M17/IP67 [2]	M12/IP67 [2]	**6FX5002-2DC46-....**	**6FX5002-2DC34-....**
		75 (246)	7.1 (0.28)	M17/IP67 [2]	M12/IP67 [2]	**6FX8002-2DC46-....**	**6FX8002-2DC34-....**
Adapter cable between encoder with DRIVE-CLiQ M12 interface and disconnection point with RJ45/IP67 connection							
To the meter [1]	DRIVE-CLiQ coupler, DME20, cabinet bushing with RJ45 connection	100 (328)	7.1 (0.28)	RJ45/IP67 [3]	M12/IP67 [2]	**6FX5002-2DC36-....**	**6FX5002-2DC34-....**
		75 (246)	7.1 (0.28)	RJ45/IP67 [3]	M12/IP67 [2]	**6FX8002-2DC36-....**	**6FX8002-2DC34-....**

MOTION-CONNECT 500	**5**		**5**	
MOTION-CONNECT 800PLUS	**8**		**8**	
Length code		**....**		**....**

The combinations of signal cable extensions shown are only provided by way of example.
The maximum length of a DRIVE-CLiQ line (basic cable plus extensions and/or adapter cable) must be observed.

[1] To the meter up to 20 m (65.6 ft), beyond that in steps of 5 m (16.4 ft) up to the maximum length.

[2] Max. 3 M12 disconnection points or 4 M17 disconnection points permissible without reduction in maximum total length. With a combination of M17 and M12, a maximum number of 3 disconnection points is possible without shortening the maximum length.

[3] DRIVE-CLiQ coupler 6SL3066-2DA00-0AB0 required at disconnection point or between 2 cables with RJ45 connection. The total maximum length is reduced by 5 m (16.4 ft) for each coupler.

© Siemens 2022

Selection and ordering data

Pre-assembled MOTION-CONNECT DRIVE-CLiQ signal cables with 24 V DC cores for SINAMICS S120 and SIMOTICS S-1FT7/S-1FK7 motors with M17 connection or direct measuring systems with M17 connection at the disconnection point

Version	SIMOTICS motor/ encoder Usage	Length, max. m (ft)	D_{max} mm (in)	Module-end connector/ degree of protection	Motor-end connector/ degree of protection	**Basic cable** Article No.	**Extension** Article No.
To the decimeter	S-1FT7 [1]/-1FK7 [1]	100 (328)	7.1 (0.28)	RJ45/IP20	M17/IP67 [2]	**6FX5002-2D■40-....**	**6FX5002-2D■44-....**
	S-1FT7 [1]/-1FK7 [1]	75 (246)	7.1 (0.28)	RJ45/IP20	M17/IP67 [2]	**6FX8002-2D■40-....**	**6FX8002-2D■44-....**
Extension for all cables with M17 connection							
To the decimeter	S-1FT7 [1]/-1FK7 [1]	100 (328)	7.1 (0.28)	M17/IP67 [2]	M17/IP67 [2]	**6FX5002-2D■44-....**	**6FX5002-2D■44-....**
	S-1FT7 [1]/-1FK7 [1]	75 (246)	7.1 (0.28)	M17/IP67 [2]	M17/IP67 [2]	**6FX8002-2D■44-....**	**6FX8002-2D■44-....**
Adapter cable between SIMOTICS motor with DRIVE-CLiQ RJ45 interface and disconnection point with M17 connection							
To the decimeter	S-1FT7 [1]/-1FK7 [1]	100 (328)	7.1 (0.28)	M17/IP67 [2]	RJ45/IP67 [3]	**6FX5002-2DC42-....**	**6FX5002-2D■44-....**
	S-1FT7 [1]/-1FK7 [1]	75 (246)	7.1 (0.28)	M17/IP67 [2]	RJ45/IP67 [3]	**6FX8002-2DC42-....**	**6FX8002-2D■44-....**
Adapter cable between encoder with DRIVE-CLiQ M12 interface and disconnection point with M17 connection							
To the meter up to 20 m (65.6 ft), beyond that in steps of 5 m (16.4 ft)		100 (328)	7.1 (0.28)	M17/IP67 [2]	M12/IP67 [2]	**6FX5002-2DC46-....**	**6FX5002-2D■44-....**
		75 (246)	7.1 (0.28)	M17/IP67 [2]	M12/IP67 [2]	**6FX8002-2DC46-....**	**6FX8002-2D■44-....**
Adapter cable between SIMOTICS motor with DRIVE-CLiQ M17 interface and disconnection point with RJ45/IP67 connection							
To the decimeter	S-1FT7 [1]/-1FK7 [1]	100 (328)	7.1 (0.28)	RJ45/IP67 [3]	M17/IP67 [2]	**6FX5002-2D■48-....**	**6FX5002-2D■44-....**
	S-1FT7 [1]/-1FK7 [1] (e.g. for DRIVE-CLiQ coupler, DME20, cabinet bushing with RJ45 connection)	75 (246)	7.1 (0.28)	RJ45/IP67 [3]	M17/IP67 [2]	**6FX8002-2D■48-....**	**6FX8002-2D■44-....**

MOTION-CONNECT 500		**5**					**5**		
MOTION-CONNECT 800PLUS		**8**					**8**		
Connector, type:	**SPEED-CONNECT**			**C**				**C**	
Connector, type:	**Full thread**			**D**				**D**	
Length code					**....**				**....**

The combinations of signal cable extensions shown are only provided by way of example.
The maximum length of a DRIVE-CLiQ line (basic cable plus extensions and/or adapter cable) must be observed.

[1] For SIMOTICS S-1FT7 (1FT7...-.....-.K.. or 1FT7...-.....-.L.), for SIMOTICS S-1FK7 with option N16.

[2] Max. 3 M12 disconnection points or 4 M17 disconnection points permissible without reduction in maximum total length. With a combination of M17 and M12, a maximum number of 3 disconnection points is possible without shortening the maximum length.

[3] DRIVE-CLiQ coupler 6SL3066-2DA00-0AB0 required at disconnection point or between 2 cables with RJ45 connection. The total maximum length is reduced by 5 m (16.4 ft) for each coupler.

© Siemens 2022

Selection and ordering data

Pre-assembled MOTION-CONNECT signal cables for motors with SPEED-CONNECT connector

Encoder system	Motor	Connection via	Length, max.	D_{max}	Degree of protection Connector [1]	**Basic cable**	**Extension**
	SIMOTICS	SINAMICS	m (ft)	mm (in)		Article No.	Article No.
Absolute encoder with EnDat 2.1	S-1FK701	SMC20	50 (164)	9.8 (0.39)	IP20/IP67	**6FX■0■2-2EN20-....**	**6FX8002-2EN24-....**
Absolute encoder with EnDat 2.1	S-1FK7[2]/-1FT7/ M-1PH8[3]	SMC20	100 (328)	9.8 (0.39)	IP20/IP67	**6FX■0■2-2EQ31-....**	**6FX■002-2EQ34-....**
Incremental encoder sin/cos 1 V_{pp} 2048 S/R	S-1FK701	SMC20	50 (164)	9.2 (0.36)	IP20/IP67	**6FX■0■2-2CN20-....**	**6FX8002-2CN24-....**
Incremental encoder sin/cos 1 V_{pp} 2048 S/R, with C and D tracks	S-1FK7/-1FT7/ M-1PH8[3]	SMC20	100 (328)	9.8 (0.39)	IP20/IP67	**6FX■0■2-2CQ31-....**	**6FX■002-2CQ34-....**
Incremental encoder sin/cos 1 V_{pp} 256 and 512 S/R, without C and D tracks	M-1PH8[3]	SMC20	50 (164)	9.2 (0.36)	IP20/IP67	**6FX80 ■2-2CQ80-....**	**6FX■002-2CQ34-....**
Resolver	S-1FK701	SMC10	130 (427)	9.2 (0.36)	IP20/IP67	**6FX■0■2-2FN20-....**	**6FX8002-2FN24-....**

MOTION-CONNECT 500	**5**					**5**		
MOTION-CONNECT 800PLUS	**8**					**8**		
Signal cable								
Pre-assembled		**0**						
Connector at module end supplied separately		**1**						
Connector at motor end supplied separately		**4**						
Length code				**....**				**....**

[1] The specified degree of protection refers to the basic cable.
[2] Not for SIMOTICS S-1FK701 motors.
[3] For SIMOTICS M-1PH808/-1PH810/-1PH813/-1PH816 motors

© Siemens 2022

Selection and ordering data

Pre-assembled signal cables for motors with full-thread connector

Encoder system	Motor	Connection via	Length, max.	D_{max}	Degree of protection Connector[1]	Basic cable	Extension
	SIMOTICS	SINAMICS	m (ft)	mm (in)		Article No.	Article No.
Absolute encoder with EnDat 2.1	M-1PH8/T-1FW3	SMC20	100 (328)	9.8 (0.39)	IP20/IP67	**6FX■0■2-2EQ10-....**	**6FX■002-2EQ14-....**
Absolute encoder with EnDat 2.1		SME25	3[2] (9.84)	9.2 (0.36)	IP67/IP67	**6FX■0■2-2AD04-....**	**–**
Absolute encoder with EnDat 2.1	L-1FN3/T-1FW6	SME125	3[2] (9.84)	9.2 (0.36)	IP67/IP67	**6FX80■2-2AD04-....**	**–**
Absolute encoder with EnDat 2.1							
• 6FX2001-5.E..		SMC20	100 (328)	9.2 (0.36)	IP20/IP67	**6FX■0■2-2CH00-....**	**6FX■002-2AD04-....**
• 1XP8014-10/1XP8024-10		SMC20	100 (328)	9.2 (0.36)	IP20/IP67	**6FX■0■2-2CH00-....**	**6FX■002-2AD04-....**
Absolute encoder with SSI 5 V DC		SME25	3[2] (9.84)	9.2 (0.36)	IP67/IP67	**6FX■0■2-2AD04-....**	**–**
Absolute encoder with SSI 24 V DC							
• 6FX2001-5.S.. Clock-pulse rate 100 ... 250 kHz		SMC30	100 (328)	9.3 (20.5)	IP20/IP67	**6FX■002-2CC11-....**	**6FX■002-2CB54-....**
• 1XP8014-20/1XP8024-20/-21		SMC30	100 (328)	9.3 (0.37)	IP20/IP67	**6FX■0■2-2CC06-....**	**–**
Incremental encoder sin/cos 1 V_{pp} 2048 S/R, with C and D tracks	M-1PH8/ T-1FW3	SMC20	100 (328)	9.8 (0.39)	IP20/IP67	**6FX■0■2-2CA31-....**	**6FX■002-2CA34-....**
Incremental encoder sin/cos 1 V_{pp} 256 and 512 S/R, without C and D tracks	M-1PH8	SMC20	50 (164)	9.2 (0.36)	IP20/IP67	**6FX80■2-2CA80-....**	**6FX■002-2CA34-....**
Incremental encoder HTL	M-1PH8	SMC30	300[3] (984)	9.3 (0.37)	–/IP67	**6FX■002-2AH00-....** **6FX■042-2AH00-....**	**6FX■002-2AH04-....**
		SMC30	300[3] (984)	9.3 (0.37)	IP20/IP67	**6FX■0■2-2AH11-....**	**6FX■002-2AH04-....**
Incremental encoder HTL	M-1PH8	CU310-2/ D410-2	100 (328)	9.3 (0.37)	IP20/IP67	**6FX■0■2-2AH11-....**	**–**
Incremental encoder sin/cos 1 V_{pp} without C and D tracks 6FX2001-3		SMC20	50 (164)	9.3 (0.37)	IP20/IP67	**6FX■0■2-2CG00-....**	**6FX■002-2CB54-....**
HTL incremental encoder, 24 V DC							
• 6FX2001-4		SMC30	100 (328)	9.3 (0.37)	–/IP67	**6FX5002-2CA12-....** **6FX5042-2CA12-....**	**6FX■002-2CB54-....**
• 1XP8012-10/-11, 1XP8032-10/-11/-12		SMC30	100 (328)	9.3 (0.37)	–/IP67	**6FX5002-2CA12-....** **6FX5042-2CA12-....**	**6FX■002-2CB54-....**
TTL incremental encoder, RS 422							
• 6FX2001-2, 5 V DC		SMC30	100 (328)	9.3 (0.37)	IP20/IP67	**6FX■0■2-2CR00-....**	**6FX■002-2CB54-....**
• 1XP8012-20/-21/-22, 1XP8032-20/-21/-22, 5 V DC		SMC30	100 (328)	9.3 (0.37)	IP20/IP67	**6FX■0■2-2CR00-....**	**6FX■002-2CB54-....**
• 6FX2001-2, 24 V DC		SMC30	100 (328)	9.3 (0.37)	IP20/IP67	**6FX■0■2-2CD24-....**	**6FX■002-2CB54-....**
Incremental encoder sin/cos 1 V_{pp} 5 V DC, without C and D tracks		SME20	3[2] (9.84)	9.3 (0.37)	IP67/IP67	**6FX■0■2-2CB54-....**	**–**
Direct incremental encoder sin/cos 1 V_{pp}	L-1FN3/T-1FW6	SME120	3[2] (9.84)	9.3 (0.37)	IP67/IP67	**6FX80■2-2CB54-....**	**–**
Resolver	S-1FK7[4]/T-1FW3	SMC10	130 (427)	9.2 (0.36)	IP20/IP67	**6FX■0■2-2CF02-....**	**6FX■002-2CF04-....**
Resolver 1XP8013-10/-11/1XP8023-10/-11		SMC10	130 (427)	9.2 (0.36)	IP20/IP67	**6FX■0■2-2CF06-....**	**–**

MOTION-CONNECT 500	**5**		**5**	
MOTION-CONNECT 800PLUS	**8**		**8**	
Signal cable				
Pre-assembled		**0**		
Connector at module end supplied separately		**1**		
Connector at motor end supplied separately		**4**		
Length code		**....**		**....**

The combinations of signal cable extensions shown are only provided by way of example.
The maximum specified cable length (basic cable and extensions) must not be exceeded.
The total maximum length is reduced by 2 m (6.56 ft) for each interruption point.

1) The specified degree of protection refers to the basic cable.

2) Up to 10 m (32.8 ft) possible, depending on the current consumption of the 5 V encoder. Up to 30 m (98.4 ft) possible for encoders with 3.6 V operating voltage.

3) With evaluation of difference signals A*, A, B*, B, otherwise ≤ 100 m (328 ft).

4) Not for SIMOTICS S-1FK701 motors.

© Siemens 2022

Selection and ordering data

Pre-assembled signal cables for hydraulic axes and with full-thread connector

Encoder system/valve/sensor	Connection via	Length, max.	D_{max}	Degree of protection Connector [1]	**Basic cable**	**Extension**
	SINAMICS	m (ft)	mm (in)		Article No.	Article No.
Absolute encoder with SSI	HLA	40 (131)	9.4 (0.37)	IP20/IP67	**6FX8002-2CC81-....**	–
TTL incremental encoder	HLA	40 (131)	9.3 (0.37)	IP20/IP67	**6FX8002-2CA11-....**	–
Standard servo solenoid valve, directly controlled	HLA	40 (131)	9.4 (0.37)	IP20/IP67	**6FX8002-2BA00-....**	–
HRV servo solenoid valve (high response)[2]	HLA	40 (131)	9.4 (0.37)	IP20/IP65	**6FX8002-2BA10-....**	–
Pressure sensor cylinder side A/B Axis 1 or 2	HLA	40 (131)	5.3 (0.21)	IP20/–	**6FX8002-2BA20-....**	–
Pressure sensor central shutoff valve (before/after)	HLA	40 (131)	5.3 (0.21)	IP20/–	**6FX8002-2BA20-....**	–
Pressure sensor axial shutoff valve (after) Axis 1 or 2	HLA	40 (131)	5.3 (0.21)	IP20/–	**6FX8002-2BA21-....**	–
MOTION-CONNECT 800PLUS					**8**	
Length code					**....**	**....**

Signal cables for temperature sensors with full-thread connector

Temperature sensor	Motor	Connection via	Length, max.	D_{max}	Degree of protection Connector [1]	**Basic cable/extension**[2]	**Adapter cable**[2]
	SIMOTICS	SINAMICS	m (ft)	mm (in)		Article No.	Article No.
Temperature sensor	L-1FN3100/L-1FN3150[3]	SME120/SME125	10 (32.8)	11.0 (0.43)	IP67/IP67	**6FX8002-2SL10-....**	**6FX8002-2SL01-....**
Temperature sensor	L-1FN3300 ... L-1FN3900[3]	SME120/SME125	10 (32.8)	11.0 (0.43)	IP67/IP67	**6FX8002-2SL10-....**	**6FX8002-2SL02-....**
Temperature sensor	T-1FW6	SME120/SME125	10 (32.8)	11.0 (0.43)	IP67/IP67	**6FX8002-2SL10-....**	–
Temperature sensor	L-1FN3100/L-1FN3150[3]	TM120	100 (328)	11.0 (0.43)	–/IP67	**6FX8002-2SL20-....**	**6FX8002-2SL01-....**
Temperature sensor	L-1FN3300 ... L-1FN3900[3]	TM120	100 (328)	11.0 (0.43)	–/IP67	**6FX8002-2SL20-....**	**6FX8002-2SL02-....**
Temperature sensor	T-1FW6	TM120	100 (328)	11.0 (0.43)	–/IP67	**6FX8002-2SL20-....**	–
MOTION-CONNECT 800PLUS					**8**	**8**	
Length code					**....**	**....**	

The combinations of signal cable extensions shown are only provided by way of example.

The maximum specified cable length (basic cable and extensions) must not be exceeded.
The total maximum length is reduced by 2 m (6.56 ft) for each interruption point.

[1] The specified degree of protection refers to the basic cable.
[2] The smallest bending radius (flexible) for signal cables 6FX8002-2SL..-.... is 85 mm (3.35 in).
[3] Continuous load version.

© Siemens 2022

Overview

Power cables, pre-assembled

Data position of the Article No.	1	2	3	4	5	6	7		8	9	10	11	12		13	14	15	16
MOTION-CONNECT 500	**6**	**F**	**X**	**5**	**0**	■	**2**	**–**	**5**	■	■	■	■	**–**	.	.	.	.
MOTION-CONNECT 800PLUS	**6**	**F**	**X**	**8**	**0**	■	**2**	**–**	**5**	■	■	■	■	**–**	.	.	.	.
Pre-assembled at motor and module ends						**0**												
Pre-assembled at motor end, connector at module end supplied separately						**1**												
Pre-assembled at motor end, connector at module end not supplied						**2**												
Connector at motor end supplied separately, pre-assembled at module end						**4**												
Without brake cores										**C**								
With brake cores										**D**								
Basic cable between / and																		
SINAMICS S120 Motor Module C/D type, booksize format, up to 30 A — Motor connector, full-thread, size 0.5										**D**	**A**	**2**	**7**					
Motor connector, full-thread, size 1 or 1.5											**S**		**6**					
Motor connector, full-thread, size 3											**S**	**1**	**7**					
Motor with terminal box (exposed core ends)											**W**		**2**					
Motor connector, SPEED-CONNECT, size 0.5										**D**	**N**	**2**	**7**					
Motor connector, SPEED-CONNECT, size 1 or 1.5											**N**		**6**					
SINAMICS S120 Motor Module, booksize format, 45 A or higher — Motor connector, full-thread, size 1.5											**S**		**4**					
Motor connector, full-thread, size 3											**S**	**2**	**3**					
Motor connector, SPEED-CONNECT, size 1.5											**N**		**4**					
SINAMICS S120 Power Module/ Motor Module, booksize compact format — Motor connector, full-thread, size 0.5										**D**	**A**	**3**	**0**					
Motor connector, full-thread, size 1 or 1.5											**G**		**1**					
Motor connector, full-thread, size 3											**G**		**3**					
Motor connector, SPEED-CONNECT, size 0.5										**D**	**N**	**3**	**0**					
Motor connector, SPEED-CONNECT, size 1											**G**[2]	**1**	**0**					
Motor connector, SPEED-CONNECT, size 1											**G**[3]	**1**	**2**					
Motor connector, SPEED-CONNECT, size 1.5											**G**		**2**					
SINAMICS S120 Combi Power Module[1] — Motor connector, SPEED-CONNECT, size 1 or 1.5											**F**							
SINAMICS S120 Motor Module booksize format, up to 30 A — SIMOTICS M-1PH8 with terminal box										**C**	**P**							
SINAMICS S120 Power Module/ Motor Module, booksize format, 45 A or higher — SIMOTICS M-1PH8 with terminal box										**C**	**R**							
SINAMICS S120 Combi Power Module[1] — SIMOTICS M-1PH8 with terminal box										**C**	**E**							
Extension between basic cable with connector / and motor connector																		
Full-thread, size 0.5 — Full-thread, size 0.5										**M**	**E**	**0**	**5**					
Full-thread, size 1 — Full-thread, size 1											**A**		**5**					
Full-thread, size 1.5 — Full-thread, size 1.5											**A**		**8**					
Full-thread, size 3 — Full-thread, size 3											**X**		**8**					
SPEED-CONNECT, size 0.5 — SPEED-CONNECT, size 0.5										**M**	**N**	**0**	**5**					
SPEED-CONNECT, size 1 — SPEED-CONNECT, size 1											**N**[2]		**5**					
SPEED-CONNECT, size 1 — SPEED-CONNECT, size 1											**Q**[3]		**5**					
SPEED-CONNECT, size 1.5 — SPEED-CONNECT, size 1.5											**Q**		**8**					
Adapter cable for SIMOTICS L-1FN3	**6**	**F**	**X**	**7**	**0**	**0**	**2**	**–**	**5**	**L**	**M**	.	.	**–**	.	.	.	.
Cross-section												.	.					
Length code																		
Units of 10 cm (3.94 in) or 1 meter (3.28 ft) or in fixed lengths															.	.	.	.

[1] See Industry Mall for MOTION-CONNECT connection system for SINAMICS S120 Combi.

[2] Cable cross-section 1.5 mm²

[3] Cable cross-section 2.5 mm²

© Siemens 2022

Overview (continued)

Power cables, sold by the meter

Data position of the Article No.	1	2	3	4	5	6	7		8	9	10	11	12		13	14	15	16
MOTION-CONNECT 500	**6**	**F**	**X**	**5**	**0**	**0**	**8**	**–**	**1**	**B**	■	**.**	**.**	**–**	**.**	**.**	**.**	**.**
MOTION-CONNECT 800PLUS	**6**	**F**	**X**	**8**	**0**	**0**	**8**	**–**	**1**	**B**	■	**.**	**.**	**–**	**.**	**.**	**.**	**.**
Power cable with brake cores, sold by the meter											**A**							
Power cable without brake cores, sold by the meter											**B**							
No. of cores and cross-sections												**.**	**.**					
Length code																		
Units of 10 cm (3.94 in) or 1 meter (3.28 ft) or in fixed lengths															**.**	**.**	**.**	**.**

8

© Siemens 2022

Overview

Data position of the Article No.	1	2	3	4	5	6	7		8	9	10	11	12		13	14	15	16
MOTION-CONNECT 500	**6**	**F**	**X**	**5**	**0**	■	**2**	**–**	**2**	■	■	■	■	**–**	.	.	.	.
MOTION-CONNECT 800PLUS	**6**	**F**	**X**	**8**	**0**	■	**2**	**–**	**2**	■	■	■	■	**–**	.	.	.	.
6FX2 cables	**6**	**F**	**X**	**2**	**0**	**0**	**2**	**–**	**1**	**D**	**C**	■	**0**	**–**	.	.	.	.

Pre-assembled at motor and module ends	**0**
Pre-assembled at motor end, connector at module end supplied separately[1]	**1**
Connector at motor end supplied separately, pre-assembled at module end[1]	**4**

Variant: Signal cables for integrated encoder

DRIVE-CLiQ basic cable between	and				
Power Module/Motor Module/SMC with IP20 connector	Power Module/Motor Module/SMC with IP20 connector	**D**	**C**	**0**	**0**
Power Module/Motor Module/SMC with RJ45/IP20 connector	Motor/encoder/SME RJ45/IP67 connector[2]	**D**	**C**	**1**	**0**
Power Module/Motor Module/SMC with RJ45/IP20 connector	M12 encoder connector	**D**	**C**	**3**	**0**
Power Module/Motor Module/SMC with RJ45/IP20 connector	M17 motor connector	**D**	**C**	**4**	**0**
DME20/cabinet bushing/coupler RJ45	Motor/encoder/SME RJ45/IP67 connector	**D**	**C**	**2**	**0**
Extension between DRIVE-CLiQ cable with connector	and				
RJ45	Motor/encoder/SME RJ45/IP67 connector	**D**	**C**	**2**	**0**
M12	M12 encoder connector	**D**	**C**	**3**	**4**
M17	M17 motor connector	**D**	**C**	**4**	**4**
DRIVE-CLiQ adapter cable between	and				
M12	RJ45 motor connector	**D**	**C**	**3**	**8**
M17	RJ45 motor connector	**D**	**C**	**4**	**2**
RJ45/IP67	M12 motor connector	**D**	**C**	**3**	**6**
RJ45/IP67	M17 encoder connector	**D**	**C**	**4**	**8**
M17	M12 encoder connector	**D**	**C**	**4**	**6**
Basic cable between	and motor with				
SMC20	Incremental encoder (sin/cos 1 V_{pp}), full-thread connector, M23	**C**	**A**	**3**	**1**
SMC30	Incremental encoder (HTL), full-thread connector, M23	**A**	**H**	**0**	**0**
CU310-2	Incremental encoder (HTL), full-thread connector, M23	**A**	**H**	**1**	**1**
SMC20	Absolute encoder, full-thread connector, M23	**E**	**Q**	**1**	**0**
SMC10	Resolver, full-thread connector, M23	**C**	**F**	**0**	**2**
SMC20	Incremental encoder (sin/cos 1 V_{pp}), SPEED-CONNECT connector, M23	**C**	**Q**	**3**	**1**
SMC20	Incremental encoder, SPEED-CONNECT connector, M17	**C**	**N**	**2**	**0**
SMC20	Absolute encoder, SPEED-CONNECT connector, M23	**E**	**Q**	**3**	**1**
SMC20	Absolute encoder, SPEED-CONNECT connector, M17	**E**	**N**	**2**	**0**
SMC10	Resolver, SPEED-CONNECT connector, M17	**F**	**N**	**2**	**0**
Extension between basic cable with connector	and motor connector				
Full-thread or SPEED-CONNECT	Full-thread or SPEED-CONNECT				**4**

Length code

Units of 10 cm (3.94 in) or 1 meter (3.28 ft) or in fixed lengths	.	.	.	.

[1] Not with DRIVE-CLiQ.
[2] Not available as 6FX2002-1... cable.

© Siemens 2022

Overview (continued)

Data position of the Article No.	1	2	3	4	5	6	7		8	9	10	11	12		13	14	15	16
MOTION-CONNECT 500	**6**	**F**	**X**	**5**	**0**	■	**2**	**–**	**2**	■	■	■	■	**–**	.	.	.	.
MOTION-CONNECT 800PLUS	**6**	**F**	**X**	**8**	**0**	■	**2**	**–**	**2**	■	■	■	■	**–**	.	.	.	.
6FX2 cables	**6**	**F**	**X**	**2**	**0**	**0**	**2**	**–**	**1**	**D**	**C**	■	**0**	**–**	.	.	.	.

Pre-assembled at motor and module ends	**0**
Pre-assembled at motor end, connector at module end supplied separately	**1**
Connector at motor end supplied separately, pre-assembled at module end	**4**

Variant: Signal cables for external encoder

Basic cable between	and				
SMC30	Incremental encoder 6FX2001-2 (TTL/supply 5 V), full-thread connector	**C**	**R**	**0**	**0**
SMC30	Incremental encoder 1XP8012-2./1XP8032-2. (TTL/supply 24 V), full-thread connector	**C**	**D**	**2**	**4**
SMC20	Incremental encoder 6FX2001-3 (sin/cos 1 V_{pp}), full-thread connector	**C**	**G**	**0**	**0**
SMC30	Incremental encoder 6FX2001-4 (HTL), full-thread connector	**C**	**A**	**1**	**2**
SMC30	Incremental encoder 1XP8012-1./1XP8032-1. (HTL), full-thread connector	**C**	**A**	**1**	**2**
SMC30	Absolute encoder with SSI 1XP8014-2./1XP8024-2., full-thread connector	**C**	**C**	**0**	**6**
SMC30	Absolute encoder 6FX2001-5.S (SSI), full-thread connector	**C**	**C**	**1**	**1**
SMC20	Absolute encoder 6FX2001-5.E (EnDat 2.1), full-thread connector	**C**	**H**	**0**	**0**
SMC20	Absolute encoder 1XP8014-10/1XP8024-10 (EnDat 2.1), full-thread connector	**C**	**H**	**0**	**0**
SMC10	Resolver 1XP8013-1./1XP8023-1., full-thread connector	**C**	**F**	**0**	**6**
Extension between basic cable with connector	and motor connector				
Full thread	Full thread				**4**

Variant: Signal cables for temperature sensor	**6**	**F**	**X**	**8**	**0**	**0**	**2**	**–**	**2**	**S**	**L**	■	■	**–**	.	.	.	.
Adapter cable with M17 socket on SIMOTICS T-1FW6 terminals												**0**	**0**					
Adapter cable with M17 socket on SIMOTICS L-1FN3100/L-1FN3150												**0**	**1**					
Adapter cable with M17 socket on SIMOTICS L-1FN3300 ... L-1FN3900												**0**	**2**					
Extension to basic cable between SME12x and SIMOTICS L-1FN3[1)]/SIMOTICS T-1FW6												**1**	**0**					
Basic cable between TM120 and SIMOTICS L-1FN3/SIMOTICS T-1FW6												**2**	**0**					

Length code

Units of 10 cm (3.94 in) or 1 meter (3.28 ft) or in fixed lengths	.	.	.	.

[1)] Adapter cable required for connecting to SIMOTICS L-1FN3.

© Siemens 2022

Overview

Description	Article No. supplement				
Length code for pre-assembled cables					
	6FX.0.2-.....-	■	■	■	■
0 m		**1**			
100 m (328 ft)		**2**			
200 m (656 ft)		**3**			
0 m			**A**		
10 m (32.81 ft)			**B**		
20 m (65.6 ft)			**C**		
30 m (98.4 ft)			**D**		
40 m (131 ft)			**E**		
50 m (164 ft)			**F**		
60 m (197 ft)			**G**		
70 m (230 ft)			**H**		
80 m (262 ft)			**J**		
90 m (295 ft)			**K**		
0 m				**A**	
1 m (3.28 ft)				**B**	
2 m (6.56 ft)				**C**	
3 m (9.84 ft)				**D**	
4 m (13.1 ft)				**E**	
5 m (16.4 ft)				**F**	
6 m (19.7 ft)				**G**	
7 m (23.0 ft)				**H**	
8 m (26.2 ft)				**J**	
9 m (29.5 ft)				**K**	
0 m					**0**
0.1 m (3.94 in)					**1**
0.2 m (7.87 in)					**2**
0.3 m (11.81 in)					**3**
0.4 m (15.75 in)					**4**
0.5 m (19.96 in)					**5**
0.6 m (23.62 in)					**6**
0.7 m (27.56 in)					**7**
0.8 m (31.5 in)					**8**
Examples:	1.0 m (3.28 ft):	1	A	B	0
	2.2 m (7.22 ft):	1	A	C	2
	8.0 m (26.3 ft):	1	A	J	0
	299.0 m (981 ft):	3	K	K	0

Note:

Pre-assembled cables with a length of 0 m (...-1AA0) can **not** be ordered!

Description	Article No. supplement				
Length code for cables sold by the meter[1]					
	6FX.008-.....-	■	■	**A**	**0**
50 m (164 ft)		**1**	**F**		
100 m (328 ft)		**2**	**A**		
200 m (656 ft)		**3**	**A**		
500 m (1641 ft)		**6**	**A**		

More information

Definition of lengths for pre-assembled cables

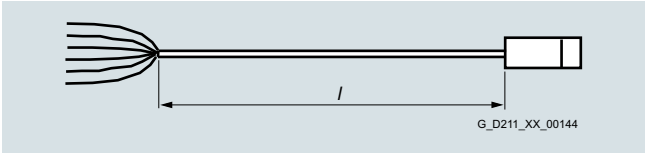

Cable with exposed core ends and pre-assembled connector

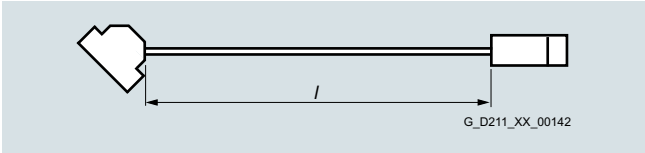

Cable with pre-assembled connectors at both ends

Tolerance:

- Cable lengths up to 10 m (32.8 ft): ± 2%
- Cable lengths of 10 m (32.8 ft) and longer: ± 1%

[1] Note type of delivery. Power cables with a core cross-section as of 4 × 4 mm^2 or 4 × 4 mm^2 with brake cores can be delivered at exact length in meters. Length code as for pre-assembled cables.

© Siemens 2022

Integration

The DRIVE-CLiQ signal cables of type 6SL3060-4A..0-0AA0 required for the standard configuration are part of the scope of supply of the Line Modules and Motor Modules. In this case, the modules must be mounted directly adjacent to one another in a row.

Connection overview of CU320-2 Control Unit with SINAMICS S120 in booksize compact and booksize formats

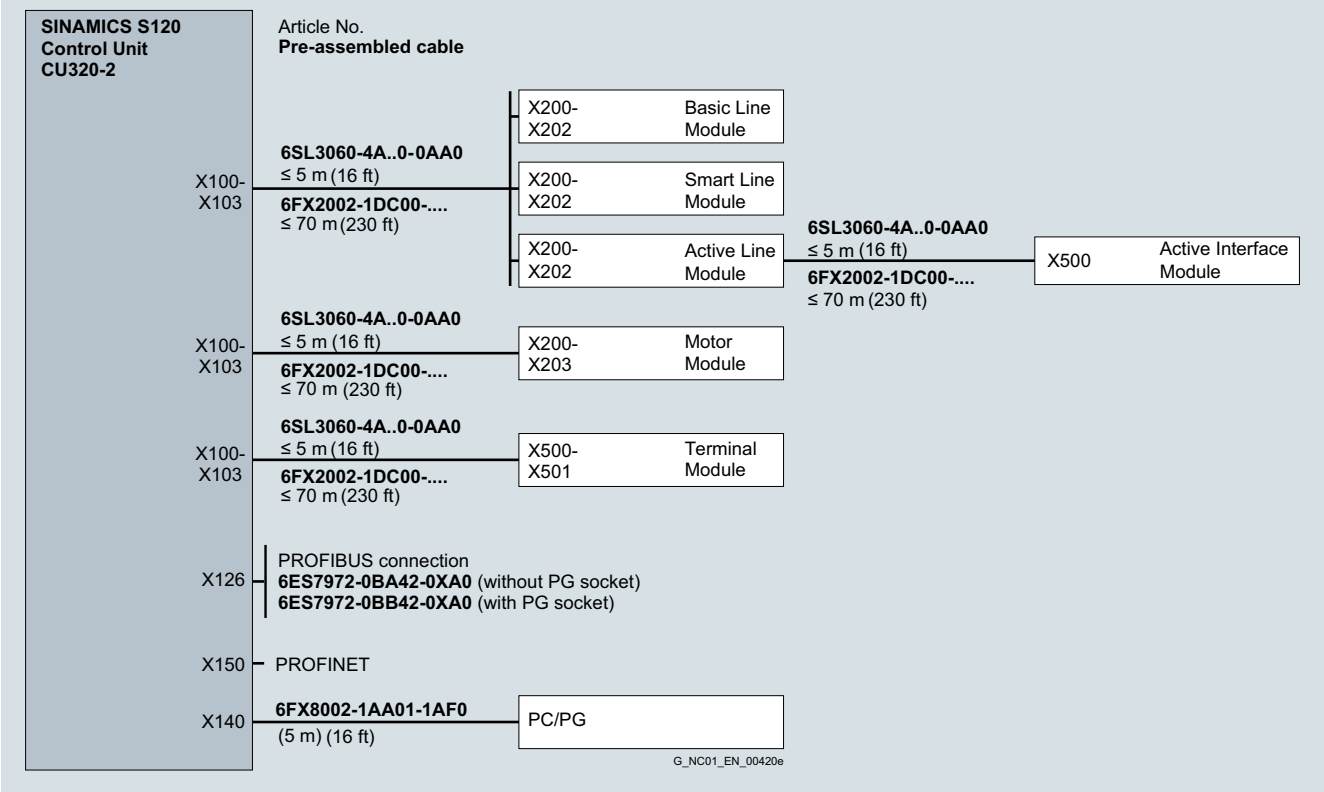

Connection overview of CU320-2 Control Unit with SINAMICS 120 in chassis format

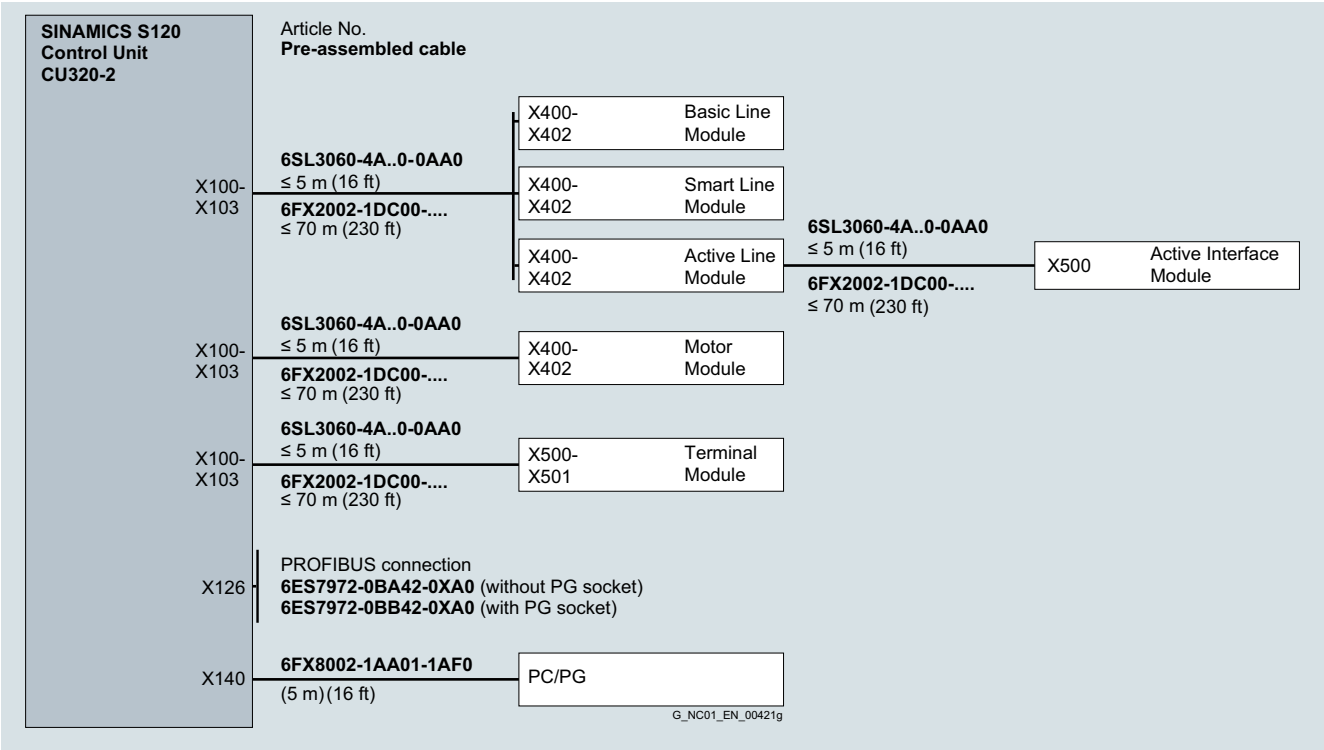

© Siemens 2022

Integration

Connection of a machine encoder (direct measuring system)

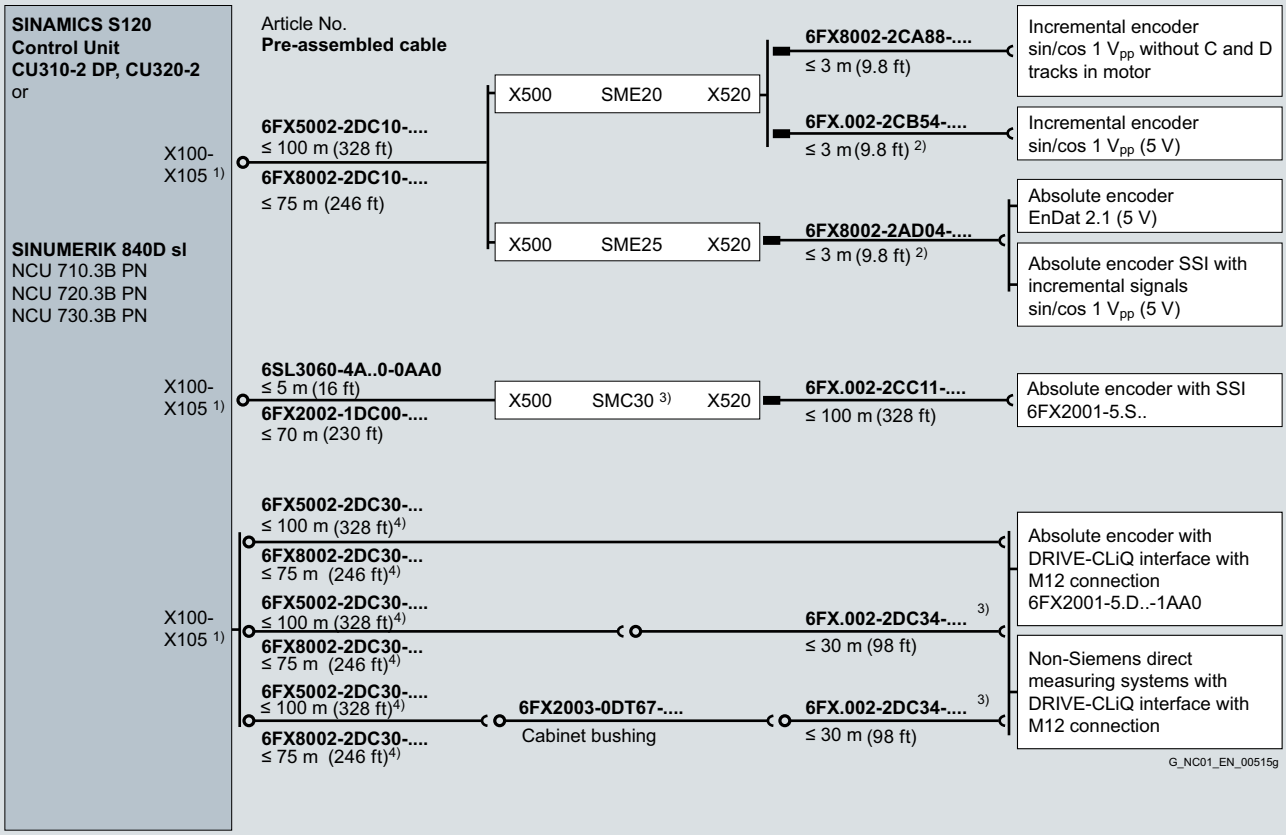

1) For Control Unit CU310-2: X100
For Control Unit CU320-2: X100-X103
2) Up to 10 m (32 ft) possible, dependent on current consumption of the 5 V encoder. Up to 30 m (98.4 ft) possible for encoders with 3.6 V operating voltage.
3) Total cable length (basic cable and extension cable) ≤ 100 m (328 ft) (6FX5...) or 75 m (246 ft) (6FX8...).
4) For further connection possibilities, refer to connection overview "SIMOTICS motors with RJ45 or M17 connection and external measuring systems with M12 connection".

© Siemens 2022

Integration

Connection overview of SINAMICS S120 Motor Modules in booksize compact and booksize formats and SINUMERIK 840 sl for SIMOTICS motors with/without DRIVE-CLiQ interface

The DRIVE-CLiQ signal cables of type 6SL3060-4A..0-0AA0 required for the standard configuration are part of the scope of supply of the Line Modules and Motor Modules. In this case, the modules must be mounted directly adjacent to one another in a row.

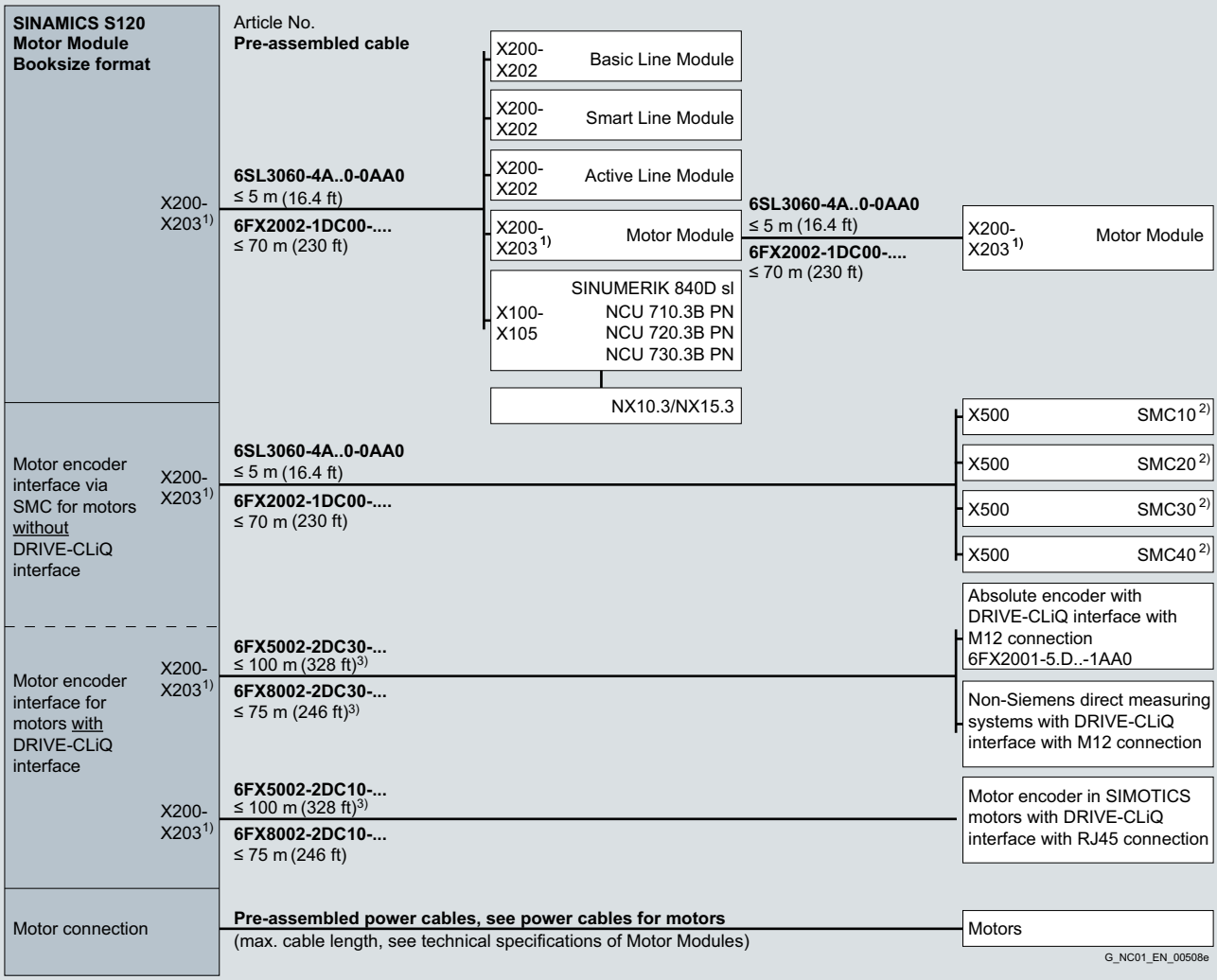

1) For Single Motor Module: X200-X202
For Double Motor Module: X200-X203

2) See connection overviews for SMC10/SMC20/SMC30/SMC40.

3) For further connection possibilities, refer to connection overview "SIMOTICS motors with RJ45 or M17 connection and external measuring systems with M12 connection".

© Siemens 2022

Integration (continued)

Connection overview of SINAMICS S120 Motor Modules in booksize format with SME120/SME125 or TM120 with/without SMC20 and SIMOTICS L-1FN3 linear motors

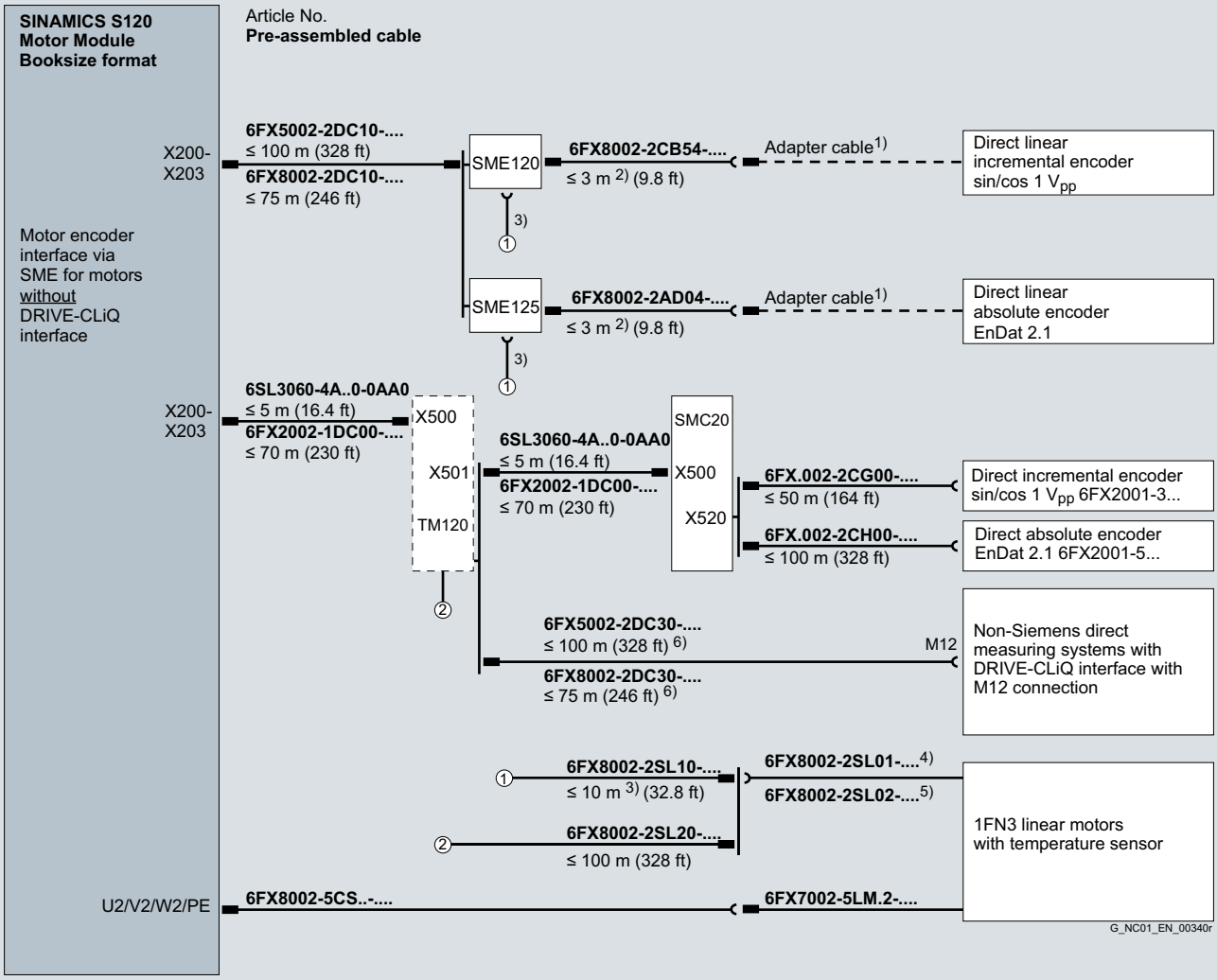

1) Adapter cable available from measuring system manufacturer.
2) Up to 10 m (32.8 ft) possible, depending on current consumption of the 5 V encoder. Up to 30 m (98.4 ft) possible for encoders with 3.6 V operating voltage.
3) The total cable length between SME120/SME125 and 1FN3 must not exceed 10 m (32.8 ft).
4) Adapter cable for 1FN3100/1FN3150 motors.
5) Adapter cable for 1FN3300 to 1FN3900 motors.
6) For further connection possibilities, refer to connection overview "SIMOTICS motors with RJ45 or M17 connection and external measuring systems with M12 connection".

© Siemens 2022

Integration (continued)

Connection overview of SINAMICS S120 Motor Modules in booksize format with SME120/SME125 or TM120 with/without SMC20 and SIMOTICS T-1FW6 torque motors/SIMOTICS M-1FE1/M-1FE2 built-in motors

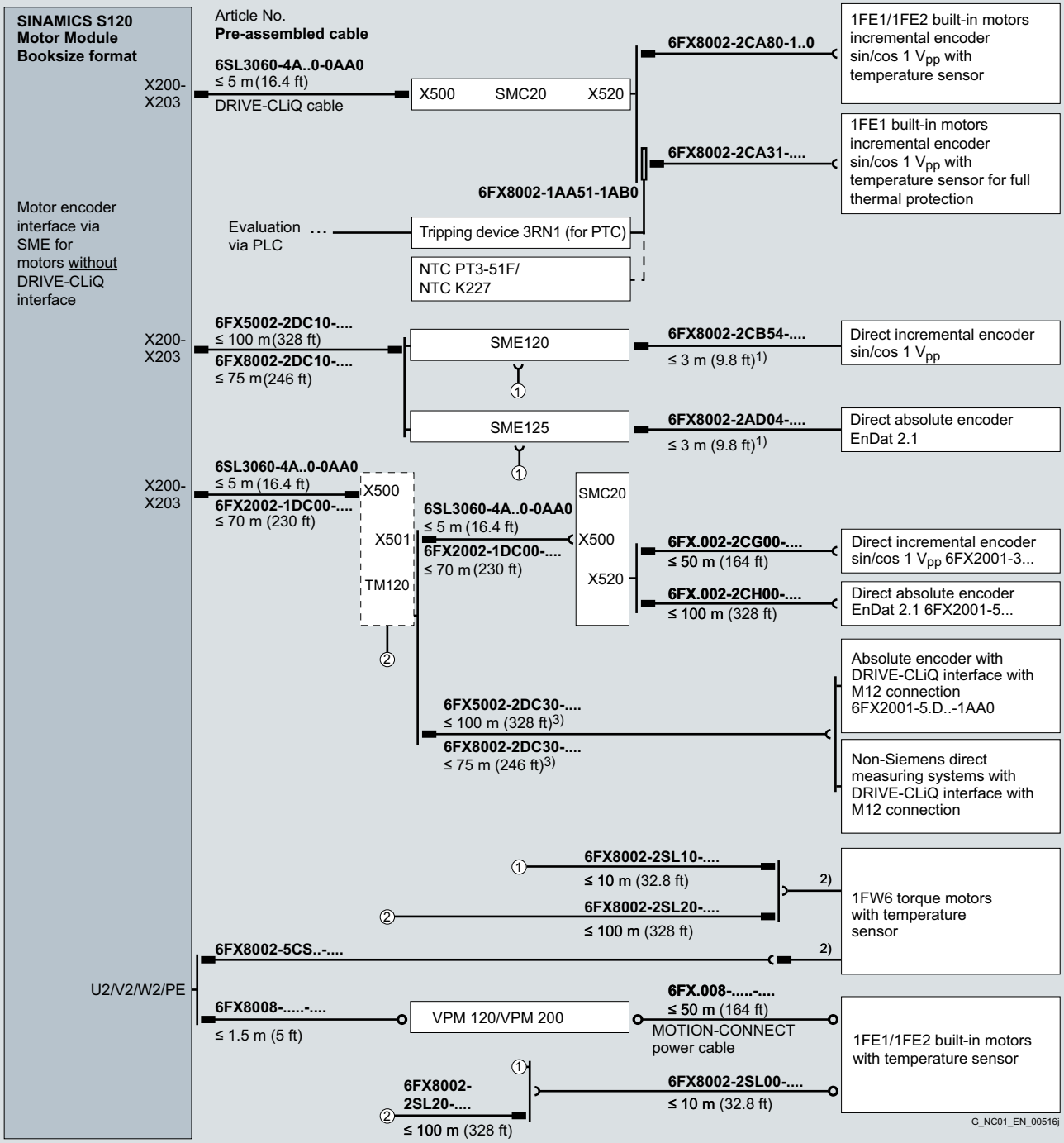

1) Up to 10 m (32.8 ft) possible, depending on current consumption of the 5 V encoder.
Up to 30 m (98.4 ft) possible for encoders with 3.6 V operating voltage.

2) For type of connection with exposed core ends, power and signal connectors are not included in the scope of supply of the motor, they must be ordered separately (see Accessories for power and signal cables).

3) For further connection possibilities, refer to connection overview "SIMOTICS motors with RJ45 or M17 connection and external measuring systems with M12 connection".

© Siemens 2022

Integration (continued)

Connection overview of SINAMICS S120 Motor Modules in booksize format and SIMOTICS 2SP1 main spindle motors with SMI24 spindle-sensor module

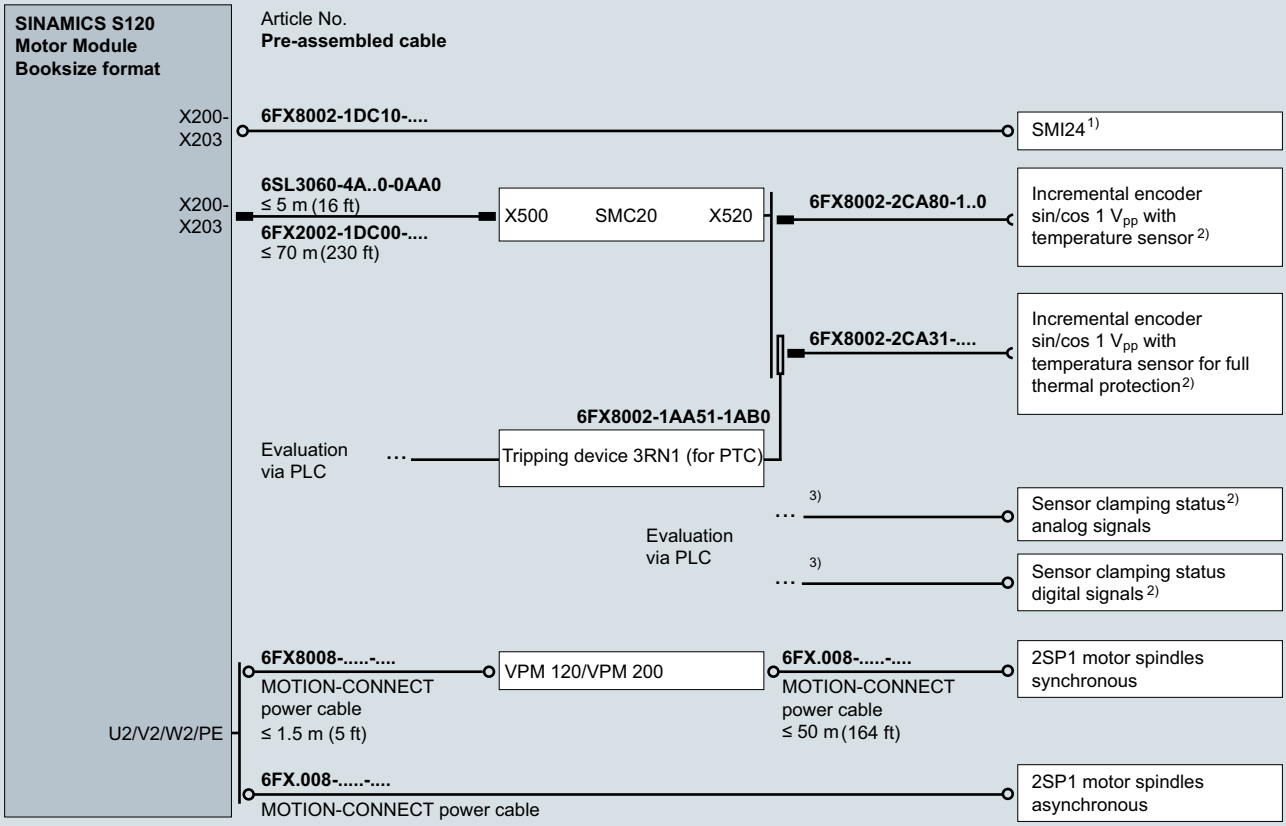

1) Spindle sensor module SMI24 for digital transmission of encoder signals + sensor clamping status + motor and bearing temperature.
2) Alternative to the use of SMI24.
3) Adapter cable available from sensor manufacturer.

© Siemens 2022

Integration

Connection overview of SINAMICS S120 Motor Modules and Line Modules in chassis format and SINUMERIK 840D sl for SIMOTICS motors with/without DRIVE-CLiQ interface

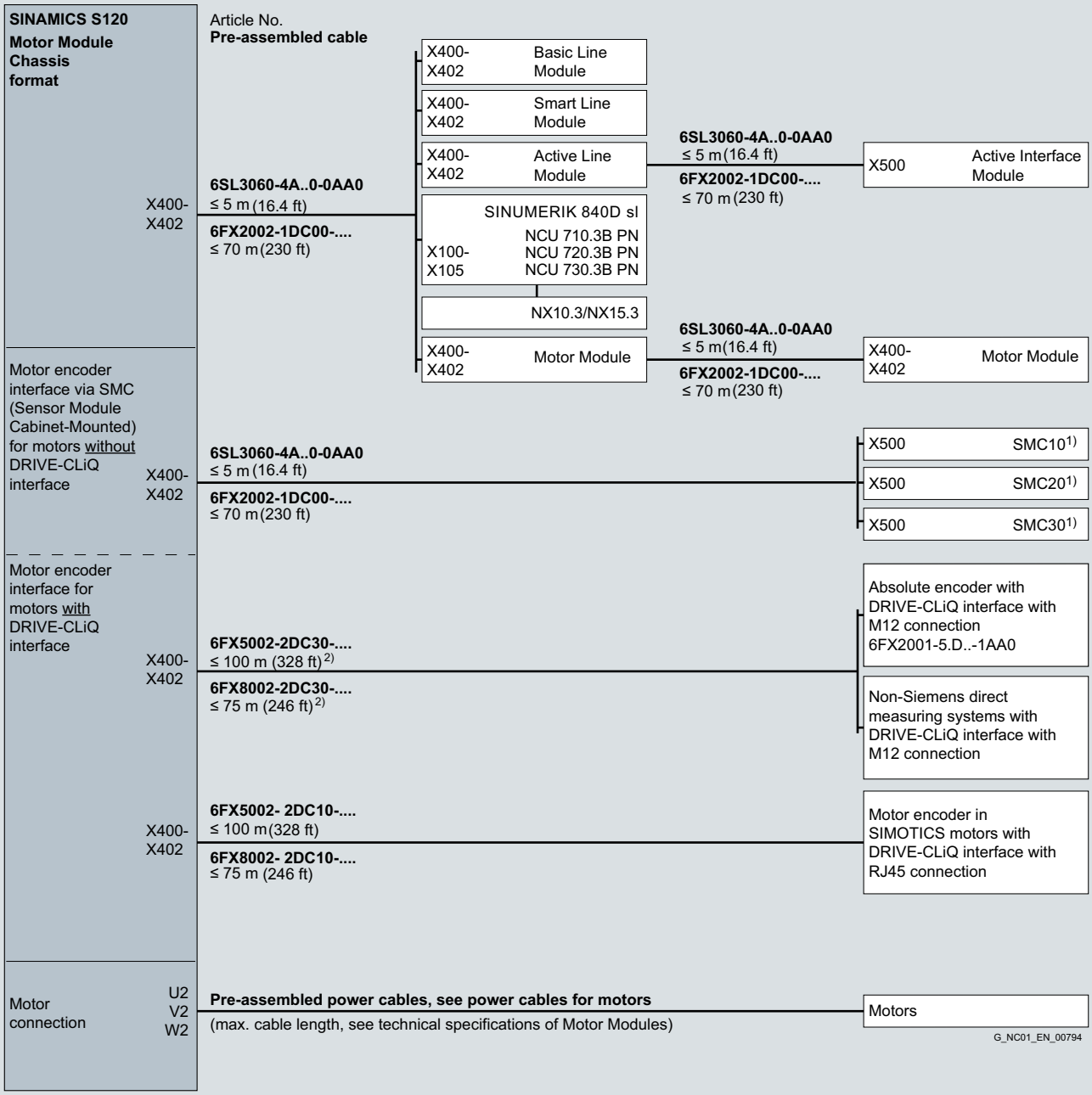

1) See connection overviews for SMC10/SMC20/SMC30.

2) For further connection possibilities, refer to connection overview "SIMOTICS motors with RJ45 or M17 connection and external measuring systems with M12 connection".

© Siemens 2022

Integration

Connection overview of SINAMICS S120M distributed servo drive

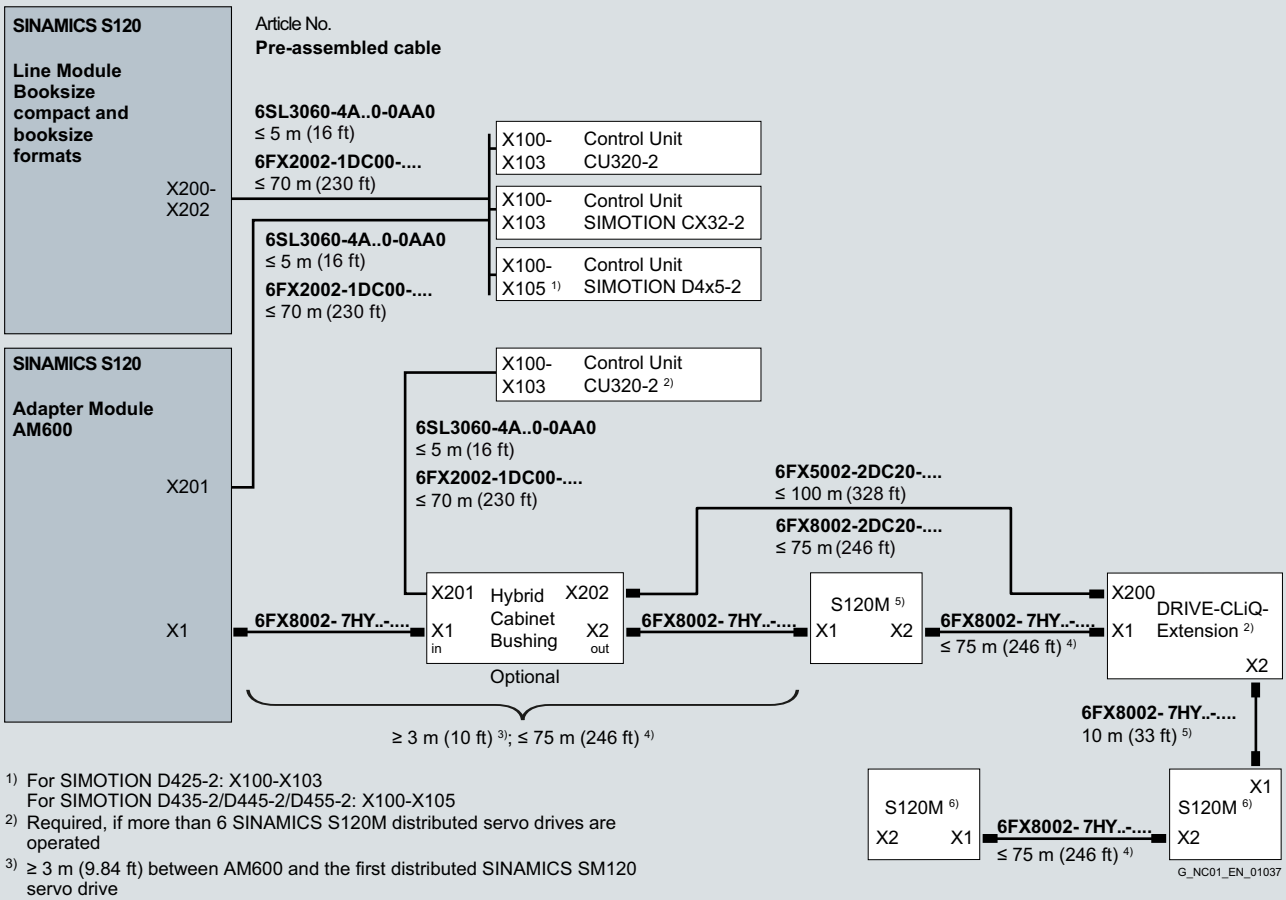

1) For SIMOTION D425-2: X100-X103
For SIMOTION D435-2/D445-2/D455-2: X100-X105
2) Required, if more than 6 SINAMICS S120M distributed servo drives are operated
3) ≥ 3 m (9.84 ft) between AM600 and the first distributed SINAMICS SM120 servo drive
4) The total length of the hybrid line must not exceed 100 m (328 ft) The overall length is reduced by 5 m (16 ft) for each DRIVE-CLiQ extension
5) A maximum of 6 SINAMICS S120M distributed servo drives per Control Unit is permissible
6) The maximum permissible number of SINAMICS S120M servo drives that can be connected to an AM600 Adapter Module depends on the power

© Siemens 2022

Integration

Connection overview of SINAMICS S120 Power Modules in blocksize format with CU310-2 Control Unit for SIMOTICS motors with/without DRIVE-CLiQ interface

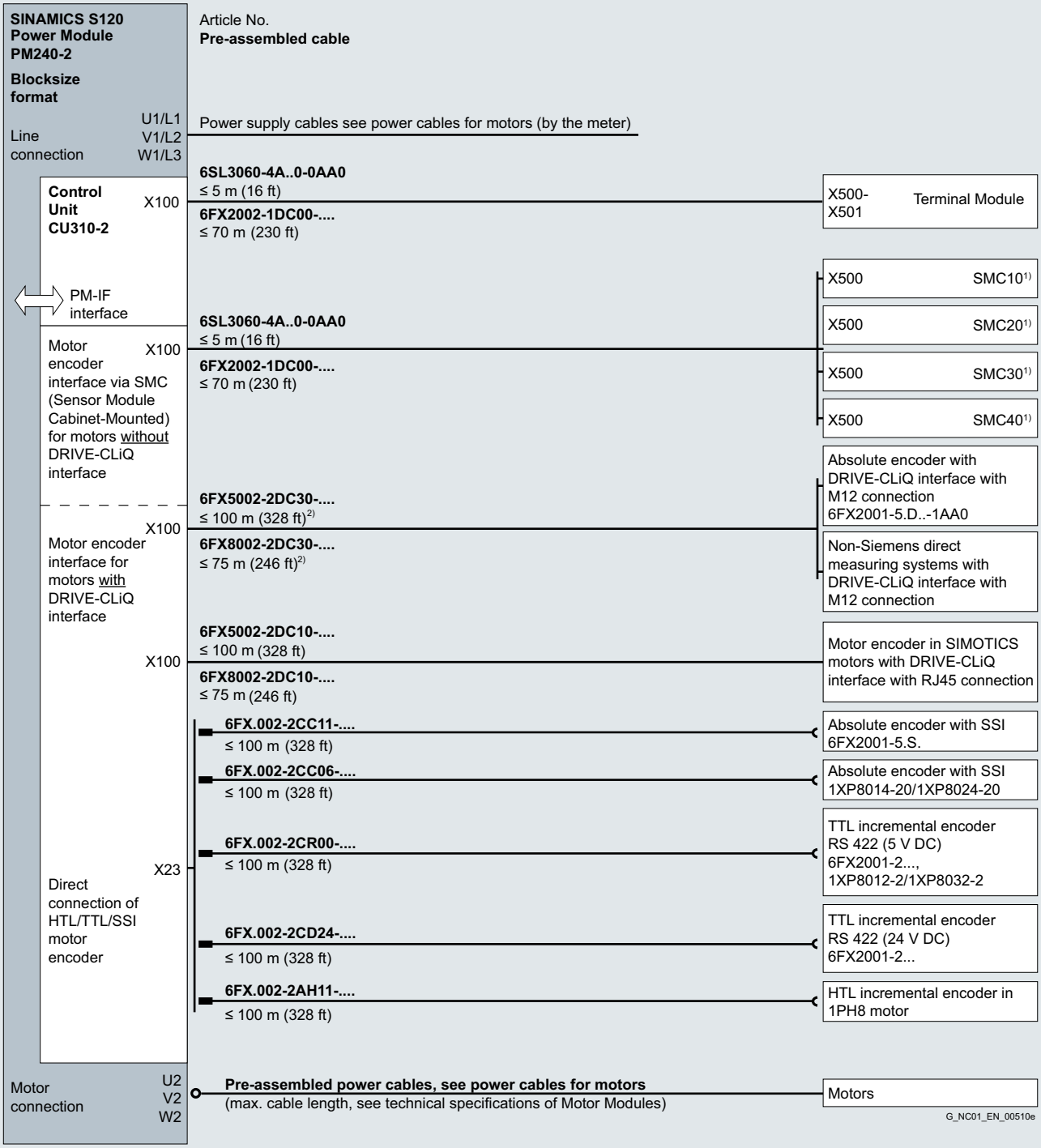

1) See connection overviews for SMC10/SMC20/SMC30/SMC40.
2) For further connection possibilities, refer to connection overview "SIMOTICS motors with RJ45 or M17 connection and external measuring systems with M12 connection".

© Siemens 2022

Integration (continued)

Connection overview of SINAMICS S120 Power Modules in blocksize format with CUA31/CUA32 Control Unit Adapter and SINUMERIK 840D sl for SIMOTICS motors with/without DRIVE-CLiQ interface

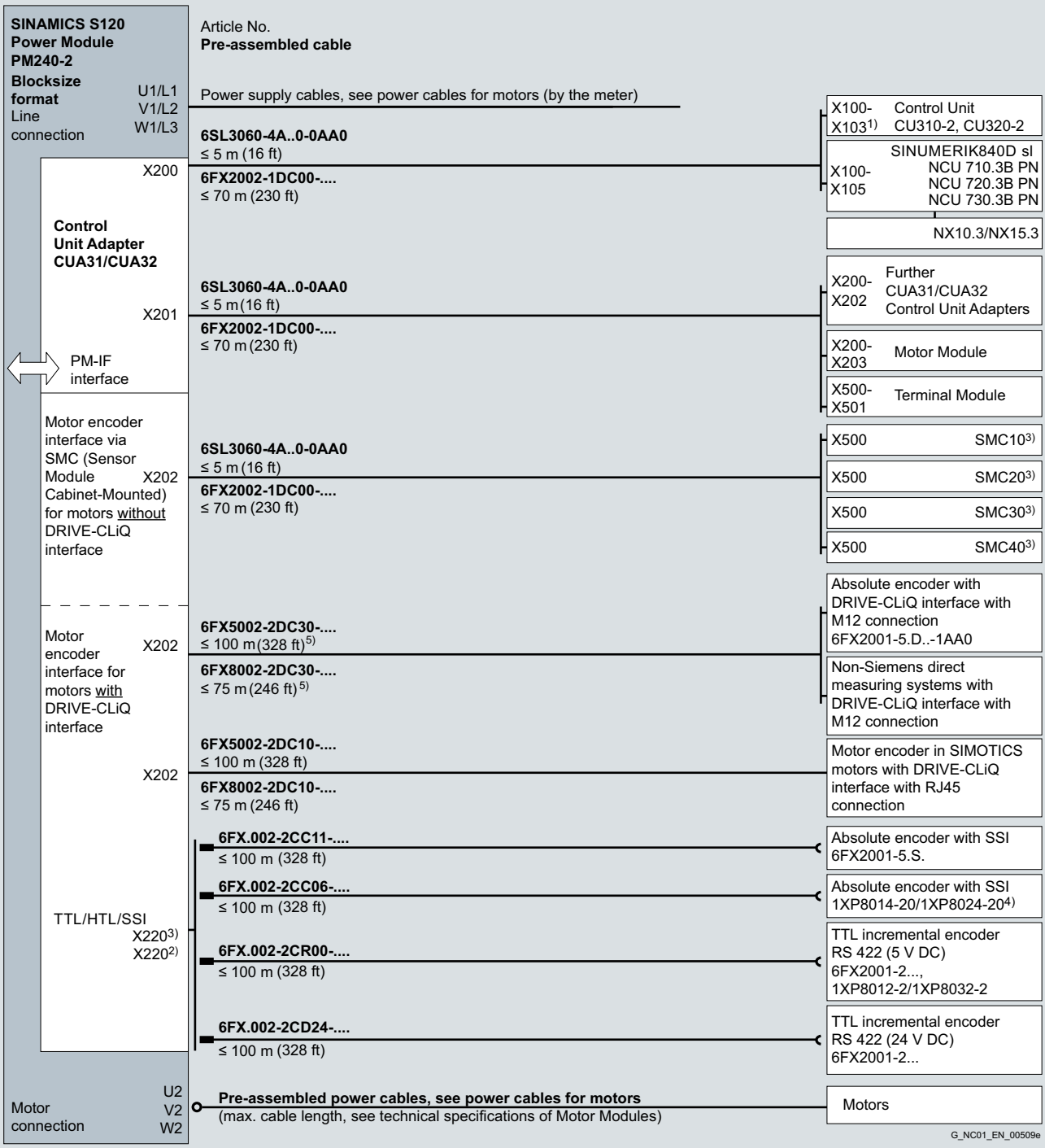

1) For Control Unit CU310-2: X100.
For Control Unit CU320-2: X100-X103.
2) Only for CUA32 Control Unit Adapter.
3) See connection overviews for SMC10/SMC20/SMC30/SMC40.
4) Only for position control.
5) For further connection possibilities, refer to connection overview "SIMOTICS motors with RJ45 or M17 connection and external measuring systems with M12 connection".

© Siemens 2022

Integration

Connection overview of SINAMICS S120 Sensor Module Cabinet-Mounted SMC10

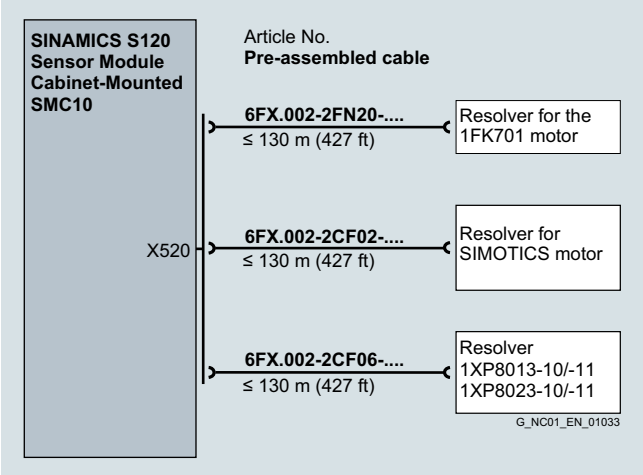

Connection overview of SINAMICS S120 Sensor Module Cabinet-Mounted SMC20

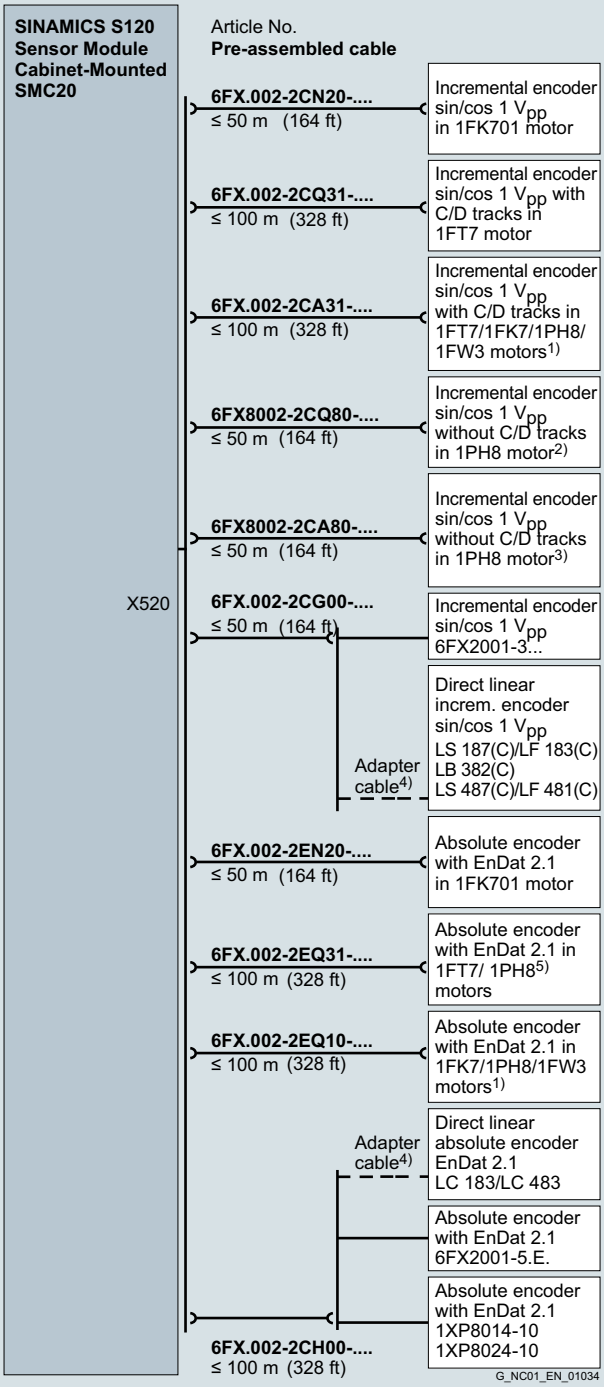

1) 1FW3 motor not suitable for machine tools.
2) Possible for 1PH808/1PH810/1PH813/1PH816 motors for encoders with 512 S/R and 256 S/R.
3) Possible for 1PH8 motors for encoders with 512 S/R and 256 S/R.
4) Adapter cable available from measuring system manufacturer.
5) Possible for 1PH808/1PH810/1PH813/1PH816 motors.

© Siemens 2022

Integration (continued)

Connection overview of SINAMICS S120 Sensor Module Cabinet-Mounted SMC30

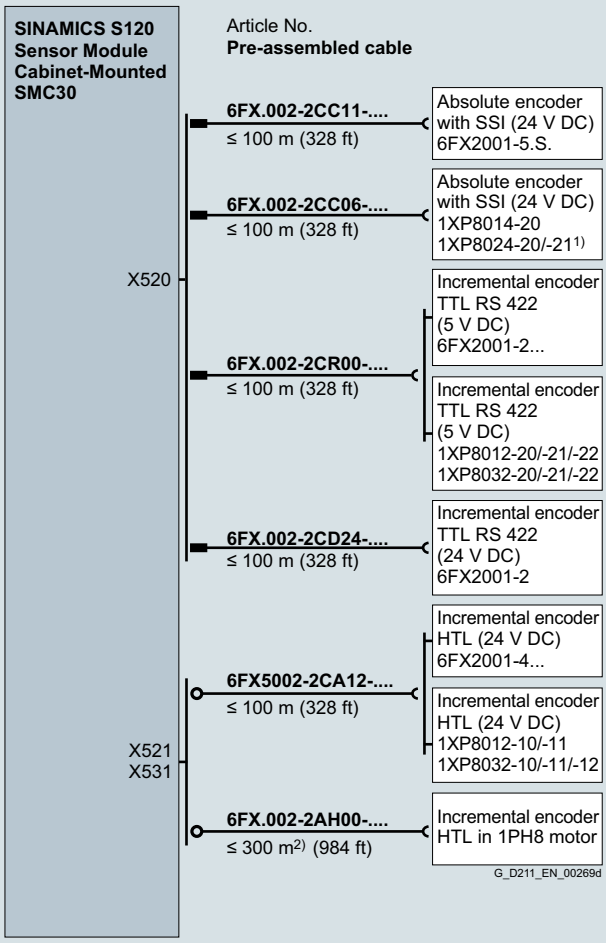

1) For position control only.

2) Applies to HTL encoders with bipolar signal evaluation or for evaluation of difference signals A*, A and B*, B; for HTL encoders with unipolar signal evaluation the permissible cable length is reduced to 100 m (328 ft).

Connection overview of SINAMICS S120 Sensor Module Cabinet-Mounted SMC40

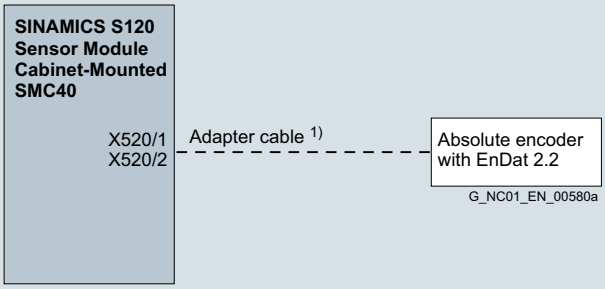

1) Adapter cable available from encoder manufacturer.

8

© Siemens 2022

Integration

Connection overview of SINAMICS S120 Hydraulic Linear Actor Module HLA

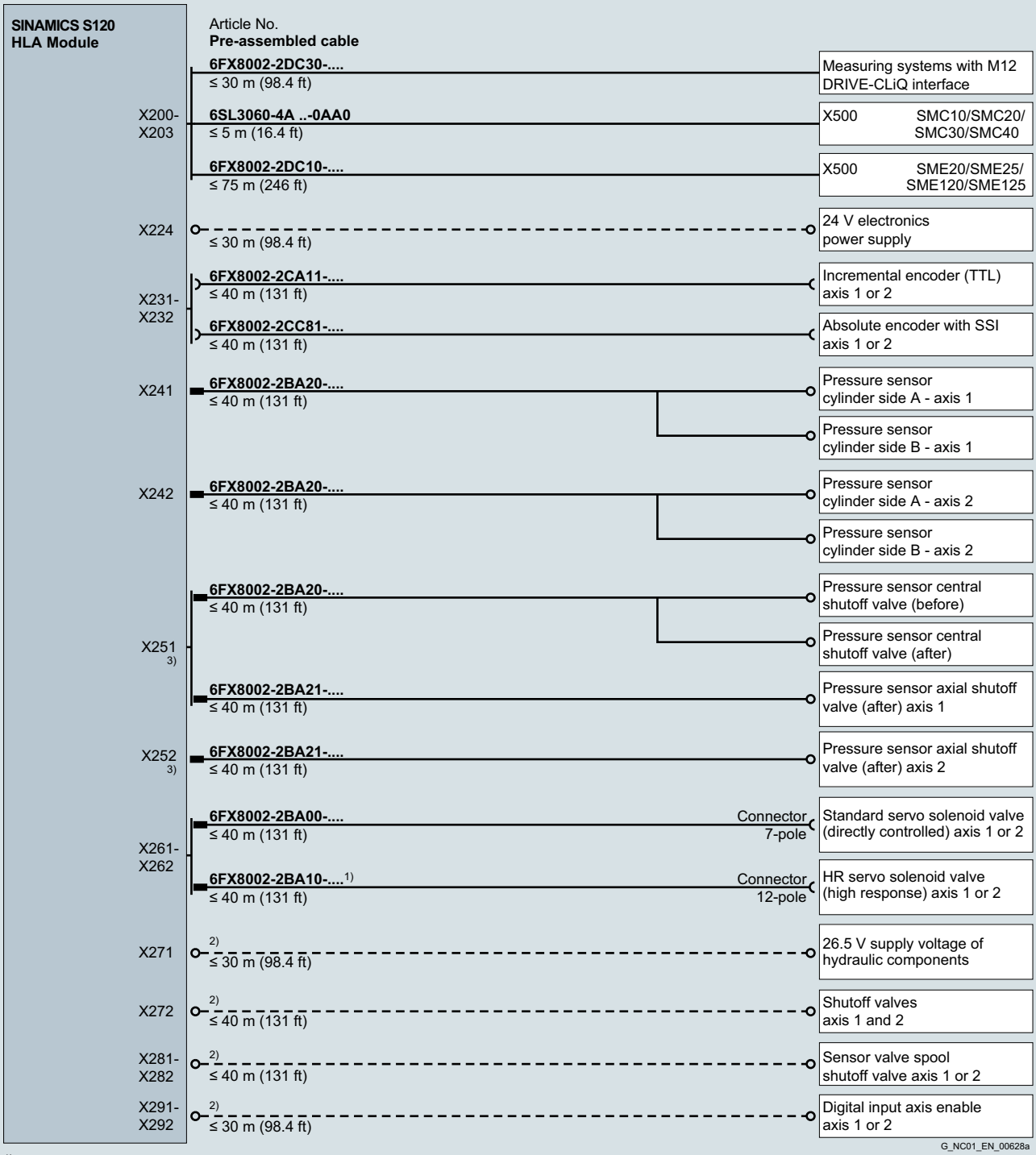

1) The cable is adapted to the servo solenoid valves by Bosch Rexroth AG.

2) For cable cross-sections and pin assignment, please refer to SINAMICS S120 Hydraulic Drive System manual.

3) Only one configuration can be connected. When pressure sensors with central shutoff valve are connected to X251, no additional pressure sensor may be connected to X252.

© Siemens 2022

Integration

Connection overview of SINAMICS S120 Combi Power Module

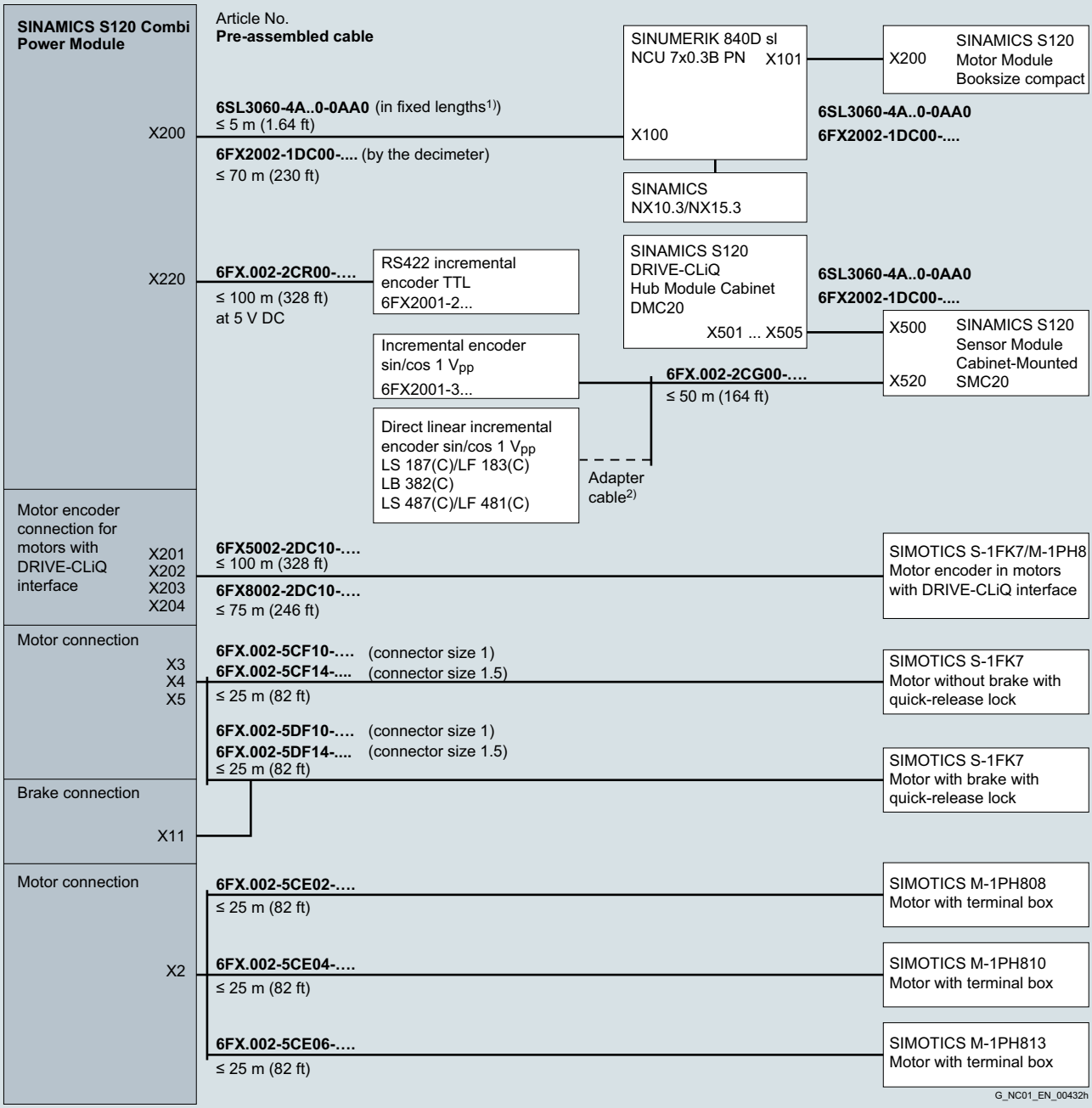

1) For standard configuration with the modules mounted directly adjacent to one another.
2) Adapter cable available from measuring system manufacturer.

© Siemens 2022

SIMOTICS motors with DRIVE-CLiQ interface RJ45 or M17 and ext. measuring systems with DRIVE-CLiQ interface M12

Integration

Connection overview of SINAMICS S120 for SIMOTICS motors with RJ45 or M17 connection and external measuring systems with M12 connection

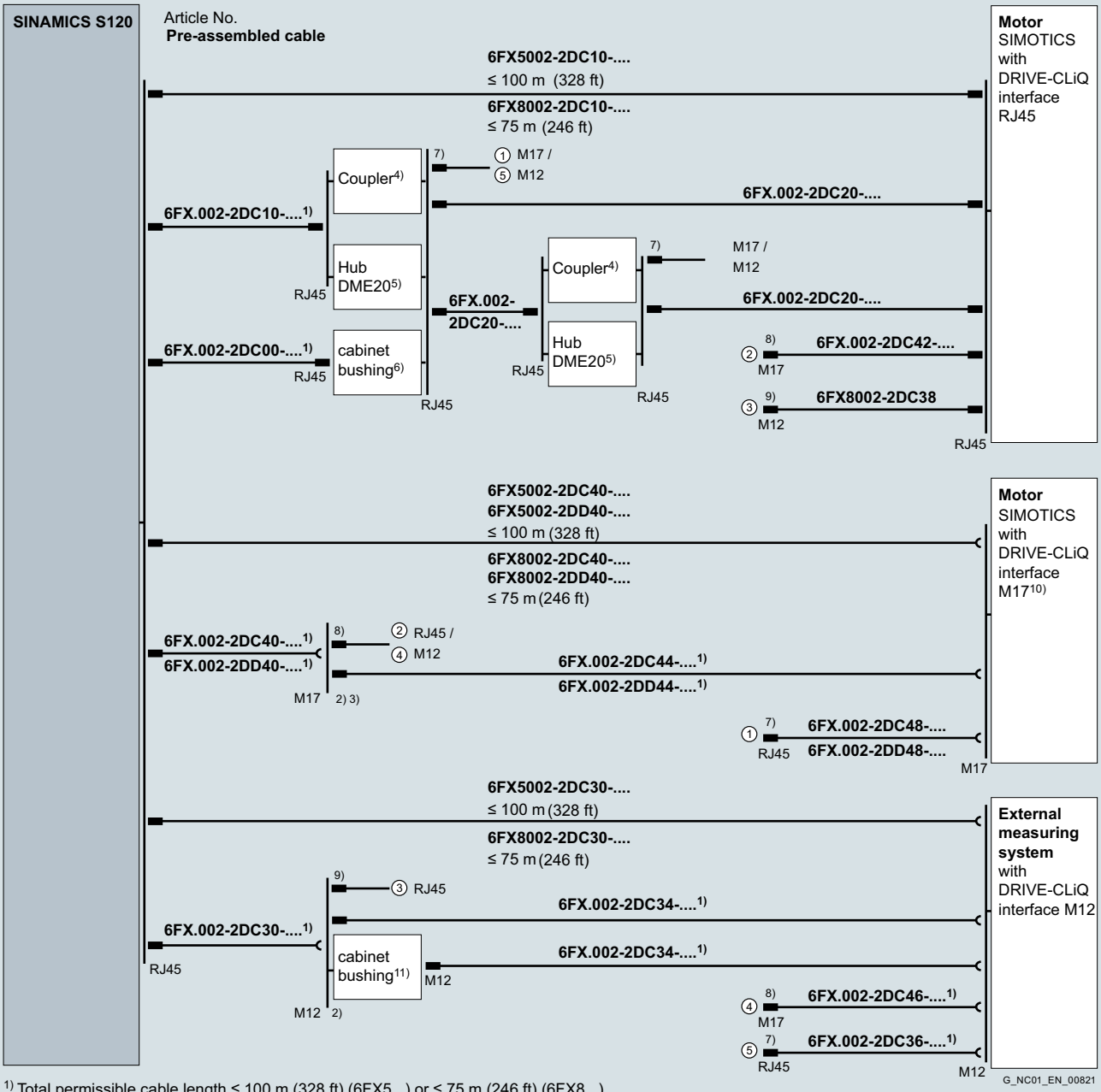

1) Total permissible cable length ≤ 100 m (328 ft) (6FX5...) or ≤ 75 m (246 ft) (6FX8...).
2) Max. 3 M12 disconnection points (max. 2, if more than 1 cable in the line is < 6 m) or 4 M17 disconnection points permissible without derating.
3) Optional mounting flange (6FX2003-7HX00).
4) Optional DRIVE-CLiQ RJ45/IP67 coupler (6SL3066-2DA00-0AB0), max. 3 couplers permissible with derating (5 m (16 ft per coupler).
5) Optional DME20 DRIVE-CLiQ Hub Module RJ45/IP67 (6SL3055-0AA00-6AB0), max. 2 DME20 Hub Modules possible.
6) Optional DRIVE-CLiQ RJ45/IP67, RJ45/IP20 cabinet bushing (6SL3066-2DA00-0AA0).
7) Disconnection point with RJ45 connection
8) Disconnection point with M17 connection
9) Disconnection point with M12 connection
10) For SIMOTICS S-1FT7...-.....-.K.. or 1FT7...-.....-.L.. and S-1FK7 with N16 option.
11) Optional DRIVE-CLiQ M12/IP67 cabinet bushing (6FX2003-0DT67).

© Siemens 2022

Overview

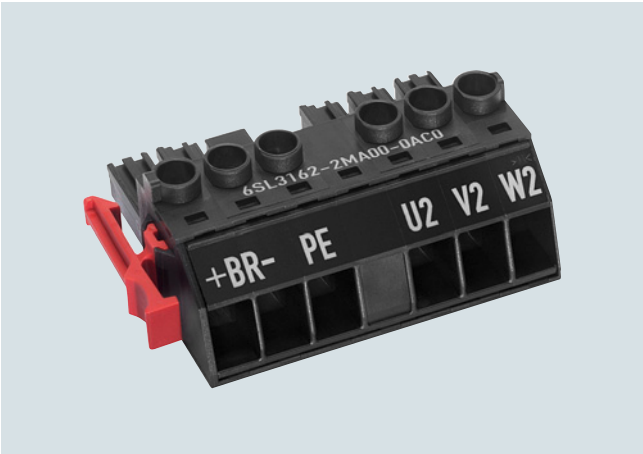

Power connector with screw terminal for Motor Modules, C/D type 3 A to 30 A

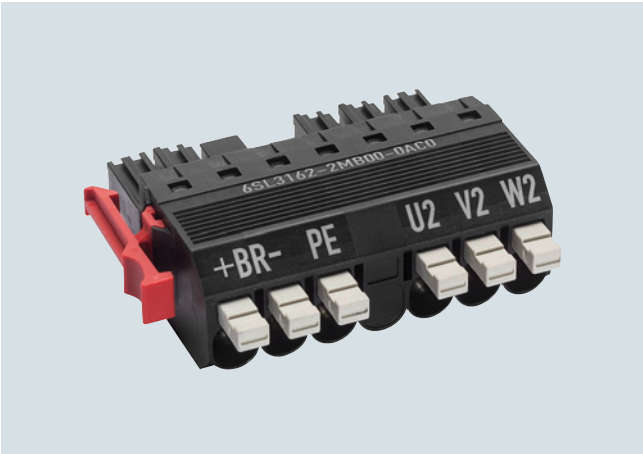

Power connector with push-in connection with snap-in actuators for Motor Modules, C/D type, 3 A to 30 A

Power connectors can also be ordered separately, e.g. for applications where installation of the motor cable would be difficult if a power connector were attached.

Selection and ordering data

Description	Article No.
Power connector with screw terminal For Motor Modules 3 … 30 A SINAMICS S120 booksize C/D type with screw terminal for cable cross-sections up to 6 mm^2	**6SL3162-2MA00-0AC0**
Power connector with push-in connection For Motor Modules 3 … 30 A SINAMICS S120 booksize C/D type Push-in connection with snap-in actuators for cable cross-sections up to 6 mm2	**6SL3162-2MB00-0AC0**

Overview

Power and signal connectors for
SIMOTICS T-1FW6 built-in torque motors

Power and signal connectors 6FX2003 are designed to ensure optimum connection of SIMOTICS T-1FW6 built-in torque motors to the drive system.

Selection and ordering data

Description	Article No.
Power connector for SIMOTICS T-1FW6 built-in torque motors	
• Size 1 for 4 × 2.5 mm^2 connectors with pins and full external thread	**6FX2003-0LA00**
• Size 1.5 for 4 × 4 mm^2/4 × 6 mm^2/ 4 × 10 mm^2/4 × 16 mm^2 connectors with pins and full external thread	**6FX2003-0LA10**
Signal connector for SIMOTICS T-1FW6 built-in torque motors	
• M17 for 4 × 0.5 mm^2 + 1 × 1.0 mm^2 connectors with sockets and full-thread cap nut	**6FX2003-0SU07**

More information

A special tool is needed to crimp the contacts.
For further information, go to:
www.intercontec.biz

© Siemens 2022

Overview

Mounting flange for power connectors

Mounting flanges are used to route or fix connectors, for example, in control cabinets. With the exception of angled connectors, a mounting flange can be retrofitted on connectors with a cap nut or with external thread.

Selection and ordering data

Description	Article No.
Mounting flange for	
• Power connector, size 0.5 and signal connector M17	**6FX2003-7HX00**
• Power connector, size 1	**6FX2003-7BX00**
• Power connector, size 1.5	**6FX2003-7CX00**
• power connector size 3	**6FX2003-7AX00**
• Signal connector M23	**6FX2003-7DX00**

Dimensional drawings

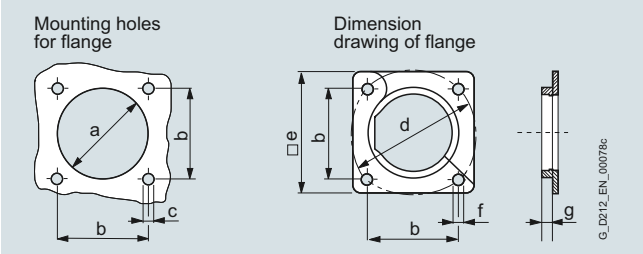

Dimensions	Power connector				Signal connector	
	Connector size 0.5	Connector size 1	Connector size 1.5	Connector size 3	M17	M23
	mm (in)	mm (in)	mm (in)	mm (in)	mm (in)	mm (in)
a	Ø 23 (0.91)	Ø 28.6 (1.13)	Ø 47 (1.85)	Ø 66 (2.60)	Ø 23 (0.91)	Ø 27.6 (1.09)
b	22.6 (0.89)	28.3 (1.11)	42.4 (1.67)	75 (2.95)	22.6 (0.89)	28.3 (1.11)
c	4 × M2.5	4 × M3	4 × M4	4 × M4	4 × M2.5	4 × M3
d	Ø 32 (1.26)	Ø 40 (1.57)	Ø 60 (2.36)	Ø 63 (2.48)	Ø 32 (1.26)	Ø 40 (1.57)
e	32 (1.26)	35 (1.38)	55 (2.17)	84.9 (3.34)	32 (1.26)	35 (1.38)
f	M3	M4	M5	M6	M3	M4
g	6.5 (0.26)	6.5 (0.26)	7 (0.28)	10 (0.39)	6.5 (0.26)	6.5 (0.26)

Overview

HF (high-frequency) clamp for power connectors

To ensure correct grounding at the cable duct or cabinet wall, a ground clamp is optionally available together with the flanges for large-area discharging of high-frequency interferences. An HF (high-frequency) clamp is not required for size 3 power connectors.

Selection and ordering data

Description	Article No.
HF (high-frequency) clamp for	
• Power connector, size 0.5 and signal connector M17	**6FX2003-7FA00**
• Power connector, size 1 and signal connector M23	**6FX2003-7FX00**
• Power connector, size 1.5	**6FX2003-7GX00**

© Siemens 2022

Overview

DRIVE-CLiQ cabinet bushing for signal cables (RJ45)

The DRIVE-CLiQ cabinet bushing (RJ45) provides the high IP67 degree of protection for the appropriate MOTION-CONNECT DRIVE-CLiQ signal cables routed through openings in control cabinets. The DRIVE-CLiQ cabinet bushing has IP54 degree of protection on the outside and IP20 on the inside of the control cabinet.

Selection and ordering data

Description	Article No.
DRIVE-CLiQ cabinet bushing For MOTION-CONNECT DRIVE-CLiQ signal cables (RJ45)	**6SL3066-2DA00-0AA0**

Dimensional drawings

Cabinet cut-out for DRIVE-CLiQ cabinet bushing

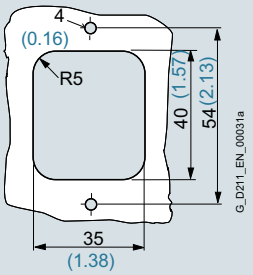

Dimensions in mm (in)

Overview

DRIVE-CLiQ cabinet bushing for signal cables (M12)

The DRIVE-CLiQ cabinet bushing (M12) provides the high IP67 degree of protection for the appropriate MOTION-CONNECT DRIVE-CLiQ signal cables routed through openings in control cabinets. The DRIVE-CLiQ cabinet bushing (M12) has IP67 degree of protection at both ends and is designed as a socket with internal thread on the outside of the cabinet and as pins with an external thread on the inside of the cabinet.

Note:

The IP67 degree of protection is only achieved with the DRIVE-CLiQ signal cables connected.

Selection and ordering data

Description	Article No.
DRIVE-CLiQ cabinet bushing For MOTION-CONNECT DRIVE-CLiQ signal cables (M12)	**6FX2003-0DT67**

Dimensional drawings

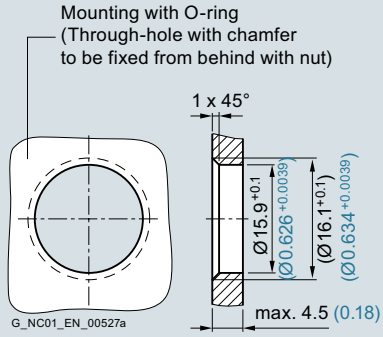

Dimensions in mm (in)

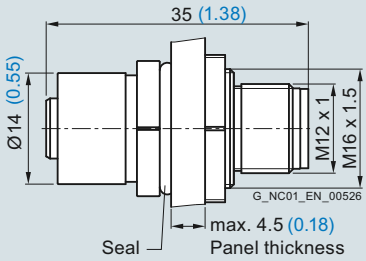

Cutout in cabinet for DRIVE-CLiQ cabinet bushing

© Siemens 2022

Overview

DRIVE-CLiQ coupler for signal cables

The DRIVE-CLiQ coupler makes it possible to join two MOTION-CONNECT DRIVE-CLiQ signal cables with IP67 degree of protection.

Selection and ordering data

Description	Article No.
DRIVE-CLiQ coupler For MOTION-CONNECT DRIVE-CLiQ signal cables	**6SL3066-2DA00-0AB0**

© Siemens 2022

9/2 Digital Enterprise Services
9/3 Consulting Services
9/4 Digital Transformation Awareness and Consulting
9/5 Digitalization Check for Machine Tools
9/6 Mechatronic Support
9/7 Engineering and Integration Services
9/7 Digitalization Preparation – Software Update
9/8 Brownfield Connectivity Services
9/10 Digitalization Implementation for Machine Tools
9/11 • Application Consulting
9/12 • Application Installation
9/13 • Application Configuration
9/14 • Application Training
9/15 • Additional Implementation Services
9/15 Server installation and configuration
9/16 Connection to presetter
9/16 Additional user stations
9/17 SINUMERIK 840D sl Virtual Commissioning Services
9/18 NX Virtual Machine Tool Services
9/19 • NX Virtual Machine Tool Services for Builders
9/21 • NX Virtual Machine Tool Services for Users
9/23 Analytics and Artificial Intelligence Services
9/24 Data and Process Analysis
9/25 Productivity Improvement
9/26 SINUMERIK Optimization Check
9/28 SINUMERIK Service Assistance
9/30 Industrial Security Services
9/31 Training Services
9/32 Support Services
9/33 Field and Maintenance Services
9/33 Database Services
9/34 Remote Service for Machine Tools
9/36 General overhaul
9/36 Function check
9/37 Spare Parts Services
9/37 Delivery of spare parts
9/38 Delivery as exchange product
9/38 Component upgrade service
9/39 Return of diagnostic parts
9/39 Stock reduction in spare parts store
9/39 Extended spare part availability
9/40 Repair Services
9/41 Retrofit and Modernization Services
9/41 Retrofit for Machine Tools
9/42 PCU retrofit for SINUMERIK 840D
9/43 Service Contracts
9/43 Repair Service Contract
9/45 • Repair Service Contract 2.0
9/47 Local Service Contract
9/51 Service Programs and Platforms
9/51 Digital Motion Control Services

9/53 SIMIT
9/53 Simulation platform for virtual commissioning

9/56 SIDOOR
9/56 Automatic door controls for machine tools

9/57 Sinorix al-deco PLUS
9/57 Object protection systems for machine tools

9/58 Switchgear

9/61 Logistics solutions
9/61 Logistics solutions for our customers

9/62 Training equipment
9/62 SINUMERIK 840D sl VC Rack
9/63 SINUMERIK 840D sl training case
9/63 SINUMERIK OP Touch training case
9/64 SINUMERIK 840D sl training rack

9/65 Documentation

9/66 Engineering software
9/66 Drive Technology Configurator

Important ordering information:
The marketing of products for Digital Motion Control Services will be gradually transferred to Siemens Industry Software. These products can then only be ordered using the corresponding product IDs.
If you need any further information or assistance, please get in touch with your Siemens contact.
www.siemens.com/automation-contact

© Siemens 2022

Overview

Ensure business success with Digital Enterprise Services

Increasing demands make it ever more important that industrial plants operate at highest productivity and efficiency levels. Digital Enterprise Services provides industry businesses with the vital competitive edge.

Whether it's production or process industry - in view of rising cost pressure, growing energy costs, and increasingly stringent environmental regulations, services for industry are a crucial competitive factor in manufacturing as well as in process industries. All over the world Siemens supports its customers with product, system, and application-related services throughout the entire life cycle of a plant.

Right from the earliest stages of planning, engineering, and building all the way to operation and modernization, these services enable customers to benefit from the Siemens experts' unique technological and product knowledge and industry expertise. Thus downtimes are reduced and the utilization of resources is optimized. The bottom line: increased plant productivity, flexibility, and efficiency, plus reduced overall costs.

Fore more information please visit us via:

https://new.siemens.com/global/en/products/services/industry.html

More information

Security information:

Siemens provides products and solutions with industrial security functions that support the secure operation of plants, systems, machines and networks.

In order to protect plants, systems, machines and networks against cyber threats, it is necessary to implement - and continuously maintain - a holistic, state-of-the-art industrial security concept. Siemens' products and solutions constitute one element of such a concept.

Customers are responsible for preventing unauthorized access to their plants, systems, machines and networks. Such systems, machines and components should only be connected to an enterprise network or the internet if and to the extent such a connection is necessary and only when appropriate security measures (e.g. firewalls and/or network segmentation) are in place.

For additional information on industrial security measures that may be implemented, please visit

www.siemens.com/industrialsecurity

Siemens' products and solutions undergo continuous development to make them more secure. Siemens strongly recommends that product updates are applied as soon as they are available and that the latest product versions are used. Use of product versions that are no longer supported, and failure to apply the latest updates may increase customer's exposure to cyber threats.

To stay informed about product updates, subscribe to the Siemens Industrial Security RSS Feed under

www.siemens.com/cert

In order to protect technical infrastructures, systems, machines and networks against cyber threats, it is necessary to implement - and continuously maintain - a holistic, state-of-the-art IT security concept. Siemens' products and solutions constitute one element of such a concept.
For more information about cyber security, please visit

www.siemens.com/cybersecurity#Ouraspiration

© Siemens 2022

Overview

Consulting Services

Make the most of the benefits of digitalization

Our service experts work together with you to determine your company's level of digitalization. These findings will form the basis for developing a digitalization strategy and a roadmap that is tailored to your requirements and current business drivers. In this way, Consulting Services not only help you with planning, consulting and a conceptual design to increase plant availability, but also support you in selecting the right products and configuration verification as well as in ensuring industrial security in your production processes.

More information

You can find more information on the internet at:

www.siemens.com/consulting-services

© Siemens 2022

Digital Transformation Awareness and Consulting

Overview

Digital Transformation Awareness and Consulting is a portfolio of consulting services intended to inspire customers and highlight fields of action for them. It also conveys the necessary knowledge and awareness for digital transformation through training courses for management and staff. Customers are also offered a reference visit to a Siemens plant, in order to experience Industry 4.0 and the digital transformation first hand.

Scope of performance:

- The reference visit is to a Siemens plant and lasts for one day
- Training for management takes place at the customer premises and lasts one day
- The training for the employees also takes place at the customer premises and also takes one day
- The workshop for drawing up a digitalization strategy normally takes three days and is also held at the customer premises. For small companies there is the option of a shorter 1-day workshop
- If this time should not be sufficient, there is an option to extend the workshop by an additional day.

The consultation consists of:

- A pre-analysis of the company and agreement of the details for the actual workshop
- The workshop itself
- Pre- and post-processing time

In the pre-analysis, essential key figures of the company as well as dates, participants and scope of the consultation are determined. In the workshop a corporate profile is first created by evaluating the strategy, market environment, and challenges for the company. Next, the digital fields of action and use cases are developed by analyzing various processes along the value added chain. The digitalization strategy is derived on the basis of this analysis and of the common prioritization of options for action with the greatest potential for increasing productivity and efficiency through digitalization measures.

Benefits

- Independent and concise consultation along the value chain
- Rapid progress by means of external resources
- Additional inspiration through references from successfully implemented in-house digitalization projects
- Security due to experienced digitalization experts and a high level of implementation competence
- Reduced time-to-market

Application

Digital Transformation Awareness and Consulting CNC is the starting point for defining a customer-specific digitalization roadmap along the value chain.

Selection and ordering data

Description	Article No.
Digital Transformation Workshop CNC 3-Days 3-day workshop for medium-sized companies	**9MC1110-1CG00-0AA1**
Digital Transformation Workshop CNC 1-Day 1-day workshop for small companies	**9MC1110-1CG00-0AA2**
Digital Transformation Workshop CNC +1-Day Extension of the 3-day or 1-day workshop by one additional day	**9MC1110-1CG00-0AA3**
Digital Transformation Awareness - Management 1-day seminar on digital transformation for management	**9MC1110-1TN00-0AA2**
Digital Transformation Awareness - Employees 1-day training on digital transformation for employees	**9MC1110-1TN00-0AA3**
Subject to agreement, both the workshops and the seminar or training take place on the customer premises.	

More information

You can find more information on the internet at:

https://support.industry.siemens.com/cs/sc/5356

Contact information for your local Siemens office or national company is available on the internet at:

www.siemens.com/automation-contact

© Siemens 2022

Overview

Digitalization Check for Machine Tools

Creating an implementation plan

In order that you can benefit from a networked machine world, you require a comprehensive database and a hardware assessment. And that is exactly what Digitalization Check for Machine Tools offers you. We can give you concrete recommendations in order to ensure that your machines are optimally connected to the IT system in your production plants, relying on standardized and scalable solutions. In this way we create a transparent insight into the measures necessary for raising the digitalization capability of your plants.

Digitalization Check for Machine Tools allows customers to benefit from the value added of a networked machine tool environment

The Digitalization Check for Machine Tools provides optimum support to the customer for digitalization of their production processes. The service includes professional consulting with specific recommendations for networking the machines into the production IT.

The service is provided on site by the Siemens organization. Machine data are standardized by a trained Siemens technician, and entered without any downtimes. An expert in a central location then evaluates compatibility with Siemens CNC software solutions (e.g. SINUMERIK Integrate) and recommends individual measures. The detailed machine park analysis, performed as part of the Digitalization Check, systematically reduces the obstacles in the project and creates transparency about the potential of the machine tools to be digitalized. This supports decision-makers with setting the course for a digital future.

Benefits

- Creation of transparency about the digitalization potential of machine tools
- Reliable, standardized data entry and evaluation without any downtimes
- Provision of a decision-making basis for further digitalization steps

Application

Digitalization Check for Machine Tools is used where the digitalization of production is heavily dependent on machine tools.

Selection and ordering data

Description	Article No.
Digitalization for Machine Tools ***(MCC0010)*** Delivery time depends on the availability of our engineers.	**6FC8530-0DC00-1EA0**

More information

You can find more information on the internet at:

https://support.industry.siemens.com/cs/sc/4825

Contact information for your local Siemens office or national company is available on the internet at:

www.siemens.com/automation-contact

© Siemens 2022

Overview

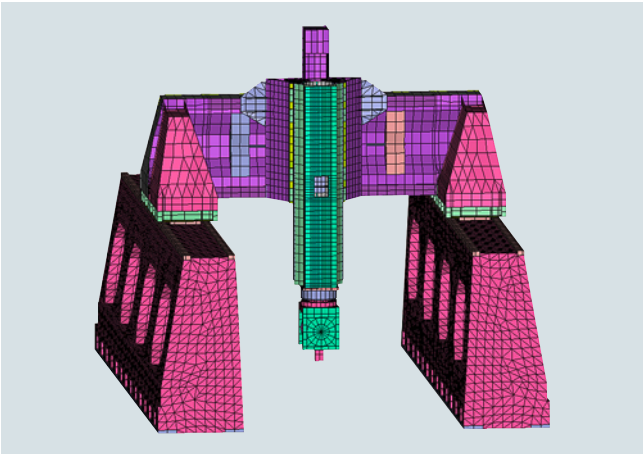

Achieve your optimized machine quicker and more efficiently with Mechatronic Support

The Mechatronic Support service ensures that right from the design stage, all the systems involved in the mechanics, electronics, and IT of the new machine are modeled, tested and optimized in a simulation environment in terms of their functionality and interaction, before they are actually built.

Mechatronic Support is thus the intelligent alternative to "trial and error". Innovative machine concepts are compared with one another, and modified and optimized at the outset – a process which of course also takes account of your ideas for new mechatronic components.

Virtual simulation - real build

With the help of the Mechatronic Support service, machine ideas and new developments can be tested mechatronically and modified in a short time at low cost. The first real prototype can be built immediately afterwards as a functioning machine.

As the machine manufacturer, you have the benefit of shorter development phases and faster time-to-market; end users benefit from an optimized high-performance machine solution.

Benefits

- Shorter development times – shorter time to market
- Reliable achievement of development objectives
- Risk-free testing of innovative machine concepts
- Higher quality and productivity from the outset
- Get to the finished machine more quickly with specialist support

Selection and ordering data

Description	Type
Consultation Technical consultation with customer	**6FC5088-1....**
Machine analysis and optimization • Analysis of the existing machine and its limits • Recommendations for manufacturer	**6FC5088-3....**
Machine simulation • Simulation of individual axes and complete machines • Analysis of dynamic behavior in the simulation	**6FC5088-4....**

More information

You can find more information on the internet at:

support.industry.siemens.com/cs/sc/2248

Contact information for your local Siemens office or national company is available on the internet at:

www.siemens.com/automation-contact

© Siemens 2022

Overview

Faster digitalization tailored to your needs

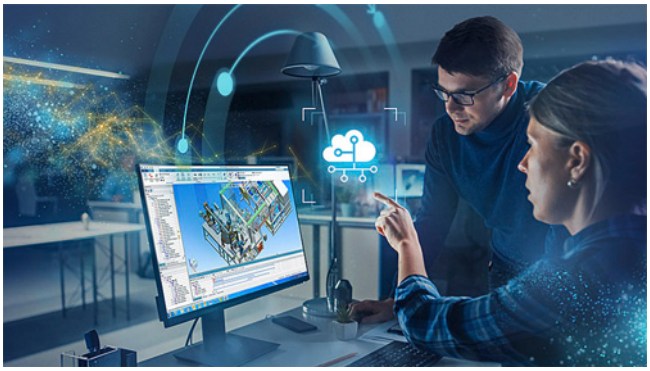

Engineering and Integration Services

According to Industry 4.0, suitable infrastructures with the right connectivity are the key points in the digital transformation of a company. This is exactly why we developed our Engineering and Integration Services: Our service experts not only ensure the necessary connection between field-to-edge and cloud, but also integrate new software, virtual machines and digital twins into your system. This can save up to 60% of the time required for commissioning new machines.

You can find more information on the internet at:

www.siemens.com/engineering-integration-services

Digitalization Preparation – Software Update

Overview

By implementing the recommendations from the digitalization check with the Digitalization Check for Machine Tools, your machine tools are equipped to state-of-the art standards and made fit for digitalization. Regardless of whether for greenfield or brownfield plants, we can upgrade your machine pool ready for digitalization with the aid of Brownfield Connectivity Services, software updates, hardware upgrades, or retrofits. After that, the necessary connectivity can be reestablished.

Software update enables machines to be digitally connected to SINUMERIK Operate

In the Digitalization Preparation phase, the software update creates the basis for connecting the machine to the SINUMERIK Integrate platform, MindSphere, or other networks.
This enables production to be digitalized.
The Siemens organization upgrades the SINUMERIK 840D sl Operate software on site – in a standardized and user-friendly manner, at a fixed price.

A software update may result as a specific measure from the Digitalization Check for Machine Tools.
The Digitalization Check for Machine Tools provides a clear integration concept with transparent costs and a basis for decision-making for further digitalization steps before the actual investment is made.

Delivery time depends on the availability of our engineers.

Benefits

- User-friendly, standardized and at a fixed price
- Enables digitalization of production
- Compatibility with SINUMERIK Integrate and MindSphere is established

Mode of operation

- Comprehensive, documented system test
- Data backup before upgrading
- System upgrade
- Data backup after upgrading
- Comprehensive function test after the upgrade

More information

You can find more information on the internet at:

https://support.industry.siemens.com/cs/sc/4834

Contact information for your local Siemens office or national company is available on the internet at:

www.siemens.com/automation-contact

© Siemens 2022

Overview

Brownfield Connectivity Services establish a connection between the production network and higher-level networks on the basis of a gateway.

With the standard solution, machine data of the SINUMERIK 840D sl, SINUMERIK 828D, and SINUMERIK ONE CNCs, and third-party controls and automation equipment are acquired.

Benefits

- Increased transparency within production for complete networking of existing production machines
- Data can be forwarded to different target systems in parallel
- Security thanks to separation of the connected machines from the corporate network or internet

Selection and ordering data

Description	Article No.
Connectivity Trial Activation BF Delivery time depends on the availability of our engineers.	**9MC1110-1PR00-0AA6**
Application Consulting BF Delivery time depends on the availability of our engineers.	**9MC1110-1PR00-0AA7**
Gateway Installation & Configuration BF Delivery time depends on the availability of our engineers.	**9MC1110-1PR00-0AA0**
Connectivity Preparation BF with Backup Delivery time depends on the availability of our engineers.	**9MC1110-1PR00-0AA1**
Connectivity Preparation BF w/o Backup Delivery time depends on the availability of our engineers.	**9MC1110-1PR00-0AA2**
Application Configuration BF Delivery time depends on the availability of our engineers.	**9MC1110-1PR00-0AA3**
Connectivity Activation BF Delivery time depends on the availability of our engineers.	**9MC1110-1PR00-0AA4**
Connectivity Maintenance BF Delivery time depends on the availability of our engineers.	**9MC1110-1PR00-0AA5**
Update Service BF	On request.

More information

You can find more information on the internet at:

https://support.industry.siemens.com/cs/sc/5392

Contact information for your local Siemens office or national company is available on the internet at:

www.siemens.com/automation-contact

© Siemens 2022

Mode of operation

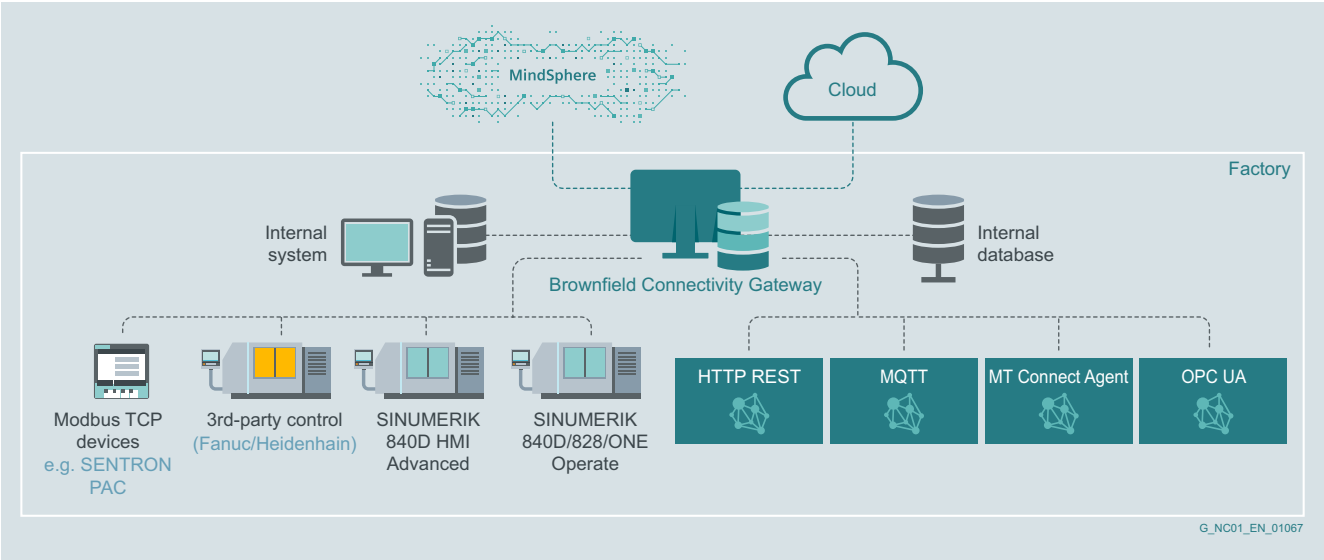

- Creation of transparency about the connection capability of the machines
- Definition of the optimum system connection
- Installation and configuration of the necessary gateway on an industrial PC
- Software preparation of the SINUMERIK control system for connection to the gateway
- Setup of the devices in the gateway
- Routing of the data to the higher-level system
- Data made visible for the higher-level system
- Connection maintenance with provision of Service Packs, hot-fixes, and hotline support

© Siemens 2022

Overview

Digitalization Implementation for Machine Tools

Implementing the digitalization solution

We can help you to use digitalization profitably by implementing the developed design digitalization concept in your plant.

The corresponding software modules from the CNC Shopfloor Management Software Suite are installed, configured according to your needs, and put into operation on-site.
In this phase your machines are connected to the higher-level IT system.
Due to the networking, you can access the data at any time, for example in MindSphere.

This data creates the transparency that is the basis for further analyses.
Furthermore, our training programs ensure that your personnel are able to make optimum use of your digital transformation.

- Application Consulting
- Application Installation
- Application Configuration
- Application Training
- Additional Implementation Services

© Siemens 2022

Overview

Application Consulting allows customers to benefit from the value added of a networked machine tool environment

Application Consulting provides optimum support to the customer for digitizing their production processes.

The service includes professional consulting with specific recommendations for networking the machines into the production IT.

Workshop for clarifying the requirements, processes on customer premises, time schedules, and interfaces – compared in each case to the standard functionality per software module:

- AMC
  Analyze MyCondition
- AMP
  Analyze MyPerformance
- AMP /OEE Monitor
  Analyze MyPerformance /OEE Monitor
- MMM
  Manage MyMachine
- MMM /Remote
  Manage MyMachine /Remote
- MMP
  Manage MyPrograms
- MMR /Tools
  Manage MyResources /Tools
- MMT
  Manage MyTools
- SFI RM
  Shopfloor Integrate Resource Management
- ACM
  Adaptive Control and Monitoring
- OMM /AC Auto
  Optimize MyMachining /AC Auto

The result is a requirement specification which can be used for making customer-specific quotations.

Prerequisite:

If according to the Digitalization Check the scope of the standard offer does not suffice, the Application Consulting service must be ordered. The price does not include costs for travel and travel time. Thanks to the detailed analysis performed as part of Application Consulting, the obstacles in the project are systematically reduced and transparency is created about the potential of the machine tools to be digitalized.

This supports decision-makers with setting the course for a digital future.

Benefits

- Creation of transparency about the digitalization potential of the machine tools
- Digitalization know-how in hardware, software and IT from a single source
- Provision of a decision-making basis for further digitalization steps

Application

Application Consulting is used where the digitalization of production is heavily dependent on machine tools.

Mode of operation

If the Digitalization Check shows that a standard solution does not meet the objectives in the prevailing conditions, Application Consulting will provide support.

In a workshop, the optimum custom-made solution is worked out together with the customer.

The result is a specification that can be used to generate a custom-made offer.

Selection and ordering data

Description	Article No.
Application Consulting AMP /OEE Monitor Delivery time depends on the availability of our engineers.	Customized Service
Application Consulting OMM /AC (Adaptive Control) Delivery time depends on the availability of our engineers.	**6FC5800-0AT00-0YB0**
Application Consulting ACM Delivery time depends on the availability of our engineers.	Customized Service
Application Consulting MMM ***(MC4R21MM12)*** Delivery time depends on the availability of our engineers.	**9MC1110-1EG00-0AB0**
Application Consulting MMM /Remote ***(MC4R21MM12)*** Delivery time depends on the availability of our engineers.	Customized Service
Application Consulting MMP ***(MC4R21MP00)*** Delivery time depends on the availability of our engineers.	**9MC1110-1EG00-0AB1**
Application Consulting MMR /Tools ***(MC4R21MR00)*** Delivery time depends on the availability of our engineers.	**9MC1110-1EG00-0AB2**
Application Consulting MMT (*MC4R21MT00)* Delivery time depends on the availability of our engineers.	**9MC1110-1EG00-0AB3**
Application Consulting SFI RM ***(MC 4R215F00)*** Delivery time depends on the availability of our engineers.	**9MC1110-1EG00-0AB4**

More information

You can find more information on the internet at:

https://support.industry.siemens.com/cs/sc/4923

Contact information for your local Siemens office or national company is available on the internet at:

www.siemens.com/automation-contact

© Siemens 2022

Overview

Application Installation allows customers to benefit from the value added of a networked machine tool environment

Application Installation provides optimum support to the customer for digitalization of their production processes.

- Application Installation per machine with backup
  Installation, configuration, and testing of the basic software for all software modules of a machine (without application) including software backup before and after installation.
- Application Installation per machine without backup
  Installation, configuration, and testing of the basic software for MMR /Tools and MMM /Remote of a machine (without application) without software backup before and after installation.

Prerequisite:

If it is a new installation and the Digitalization Check shows that the standard functionality of the required applications is sufficient, this service has to be ordered for every machine and application – always in combination with the server installation and machine installation.

Benefits

- Digitalization know-how in hardware, software and IT from a single source

Application

Application Installation is used where the digitalization of production is heavily dependent on machine tools.

Mode of operation

- Installation and testing of the necessary software on the SINUMERIK control of a machine
- Available with and without data backup, before and after installation

More information

You can find more information on the internet at:

https://support.industry.siemens.com/cs/sc/4923

Contact information for your local Siemens office or national company is available on the internet at:

www.siemens.com/automation-contact

Selection and ordering data

Description	Article No.
Application Installation MMM /Remote w/ Backup *(MCSD0020)* Delivery time depends on the availability of our engineers.	**9MC1110-1EG00-0AC5**
Application Installation MMR /Tools w/ Backup *(MC4R21MR03)* Delivery time depends on the availability of our engineers.	**9MC1110-1EG00-0AC7**
Application Installation AMP w/ Backup *(MC4R21AP03)* Delivery time depends on the availability of our engineers.	**9MC1110-1EG00-0AB6**
Application Installation MMP w/ Backup *(MC4R21MP03)* Delivery time depends on the availability of our engineers.	**9MC1110-1EG00-0AB8**
Application Installation MMT w/ Backup *(MC4R21MT03)* Delivery time depends on the availability of our engineers.	**9MC1110-1EG00-0AC1**
Application Installation SFI RM w/ Backup *(MC4R21SF03)* Delivery time depends on the availability of our engineers.	**9MC1110-1EG00-0AC3**
Application Installation OMM /AC Auto w/ Backup Delivery time depends on the availability of our engineers.	Customized Service
Application Installation ACM w/ Backup Delivery time depends on the availability of our engineers.	Customized Service
Application Installation ACM 3P w/ Backup Delivery time depends on the availability of our engineers.	Customized Service
Application Installation MMM /Remote w/o Backup *(MC4R210000)* Delivery time depends on the availability of our engineers.	**9MC1110-1EG00-0AC6**
Application Installation MMR /Tools w/o Backup *(MC4R21MR04)* Delivery time depends on the availability of our engineers.	**9MC1110-1EG00-0AC8**
Application Installation AMP w/o Backup *(MC4R21AP04)* Delivery time depends on the availability of our engineers.	**9MC1110-1EG00-0AB7**
Application Installation MMP w/o Backup *(MC4R21MP04)* Delivery time depends on the availability of our engineers.	**9MC1110-1EG00-0AC0**
Application Installation MMT w/o Backup *(MC4R21MT04)* Delivery time depends on the availability of our engineers.	**9MC1110-1EG00-0AC2**
Application Installation SFI RM w/o Backup *(MC4R21SF04)* Delivery time depends on the availability of our engineers.	**9MC1110-1EG00-0AC4**
Application Installation OMM /AC Auto w/o Backup Delivery time depends on the availability of our engineers.	Customized Service
Application Installation ACM w/o Backup Delivery time depends on the availability of our engineers.	Customized Service
Application Installation ACM 3P w/o Backup Delivery time depends on the availability of our engineers.	Customized Service

© Siemens 2022

Overview

Application Configuration allows customers to benefit from the value added of a networked machine tool environment

Application Configuration provides optimum support to the customer for digitalization of their production processes.

- Configuration of the software on the server and download to a machine
- Configuration of the standard interface, testing of machine signals and their functionality
- Acceptance and release with the customer

Prerequisite:

If it is a new installation and the Digitalization Check shows that the standard functionality of the required applications is sufficient, this service has to be ordered for every machine and application – always in combination with the server installation and machine installation.

Benefits

- Digitalization know-how in hardware, software and IT from a single source

Application

Application Configuration is used where the digitalization of production is heavily dependent on machine tools.

Mode of operation

Configuration of the application on the machine and server. The service includes configuration of standard interfaces, a signal and function test of the machines and final acceptance with the customer.

Selection and ordering data

Description	Article No.
Application Configuration AMC *(MCSD2020)* Delivery time depends on the availability of our engineers.	**6FC8530-0AC03-0EA0**
Application Configuration AMP /OEE Monitor *(MC4R21AP02)* Delivery time depends on the availability of our engineers.	**9MC1110-1EG00-0AA4**
Application Configuration MMM /Remote *(MC4R21MM12)* Delivery time depends on the availability of our engineers.	**9MC1110-1EG00-0AA5**
Application Configuration MMR /Tools *(MC4R21MM02)* Delivery time depends on the availability of our engineers.	**9MC1110-1EG00-0AA6**
Application Configuration OMM /AC Auto Delivery time depends on the availability of our engineers.	Customized Service
Application Configuration ACM Delivery time depends on the availability of our engineers.	Customized Service
Application Configuration MMM *(MCSD5030)* Delivery time depends on the availability of our engineers.	**6FC8530-0AC06-0EA0**
Application Configuration AMP *(MCSD2010)*	**6FC8530-0AC00-0EA0**
Application Configuration MMP *(MCSD5010)* Delivery time depends on the availability of our engineers.	**6FC8530-0AC02-0EA0**
Application Configuration MMT *(MCSD5020)* Delivery time depends on the availability of our engineers.	**6FC8530-0AC01-0EA0**
Application Configuration SFI RM Delivery time depends on the availability of our engineers.	Customized Service

More information

You can find more information on the internet at:

https://support.industry.siemens.com/cs/sc/4923

Contact information for your local Siemens office or national company is available on the internet at:

www.siemens.com/automation-contact

© Siemens 2022

Overview

Application Training allows customers to benefit from the value added of a networked machine tool environment

Application Training for individual software modules and Administrator Training help our customers to familiarize themselves with the software modules in an optimum way.

- Introduction to application on machines and on the server
- Remedy for faults situations including instructions

Prerequisite:

This training is obligatory for every new installation of AMC, AMP, AMP /OEE Monitor, MMM, MMM /Remote, MMP, MMR /Tools, MMT.
Maximum of 10 participants.

Benefits

- Digitalization know-how in hardware, software and IT from a single source

Application

Application Training is used where the digitalization of production is heavily dependent on machine tools.

Mode of operation

As part of Application Training, up to 10 persons are familiarized with the basic functions of the application on site by Siemens experts.

Selection and ordering data

Description	Article No.
Application Training AMC *(MCT2021)* Delivery time depends on the availability of our engineers.	**6FC8530-0TT03-0EA0**
Application Training AMP *(MCT2011)* Delivery time depends on the availability of our engineers.	**6FC8530-0TT00-0EA0**
Application Training AMP /OEE Monitor *(MC4R20AP1)* Delivery time depends on the availability of the engineers.	**9MC1110-1TN00-0AA5**
Application Training MMM /Remote *(MC4R20MM11)* Delivery time depends on the availability of our engineers.	**9MC1110-1TN00-0AA6**
Application Training MMR /Tools *(MC4R20MR01)* Delivery time depends on the availability of our engineers.	**9MC1110-1TN00-0AA7**
Application Training OMM /AC Auto Delivery time depends on the availability of our engineers.	Customized Service
Application Training ACM Delivery time depends on the availability of our engineers.	Customized Service
Application Training MMM *(MCT5022)* Delivery time depends on the availability of our engineers.	**6FC5830-0TT05-0EA0**
Application Training MMP *(MCT5011)* Delivery time depends on the availability of our engineers.	**6FC8530-0TT01-0EA0**
Application Training MMT *(MCT5021)* Delivery time depends on the availability of our engineers.	**6FC8530-0TT02-0EA0**
Application Training SFI RM Delivery time depends on the availability of our engineers.	Customized Service

More information

You can find more information on the internet at:

https://support.industry.siemens.com/cs/sc/4923

Contact information for your local Siemens office or national company is available on the internet at:

www.siemens.com/automation-contact

© Siemens 2022

Overview

Server installation and configuration allow customers to benefit from the value added of a networked machine tool environment

Server installation and configuration provide optimum support to the customer for digitalization of their production processes.

- Installation, configuration and testing of the server software of a machine (without application) including software backup before and after installation.
- Consultation and project management for the customer.

Prerequisite:

If it is a new installation and the Digitalization Check shows that the standard functionality (AMP/MMP/MMT/MMM)[1] is adequate, this service has to be ordered only once for this installation – irrespective of how many software modules are ordered.

The software license must be available at the time of installation.

Benefits

- Digitalization know-how in hardware, software and IT from a single source

Application

Server installation and configuration is used where the digitalization of production is heavily dependent on machine tools.

Selection and ordering data

Description	Article No.
Server installation and configuration ***(MCSD0010)*** Delivery time depends on the availability of our engineers.	**6FC8530-0SS00-0EA0**

More information

You can find more information on the internet at:

https://support.industry.siemens.com/cs/sc/4923

Contact information for your local Siemens office or national company is available on the internet at:

www.siemens.com/automation-contact

[1] AMP = Analyze MyPerformance,
MMP = Manage MyPrograms,
MMT = Manage MyTools,
MMM = Manage MyMachine

© Siemens 2022

Digitalization Implementation for Machine Tools > Additional Implementation Services > Connection to presetter

Overview

Connection to presetter allows customers to benefit from the value added of a networked machine tool environment

Connection to presetter provides optimum support to the customer for digitalization of their production processes.

- Configuration and testing of the interface to a presetting device.

Prerequisite:

This service can only be separately ordered for each presetting device in combination with the MMT installation.

Benefits

- Digitalization know-how in hardware, software and IT from a single source

Application

Connection to presetter is used where the digitalization of production is heavily dependent on machine tools.

Selection and ordering data

Description	Article No.
Connection to presetter *(MCSD5021)* Delivery time depends on the availability of our engineers.	**6FC8530-0AC04-0EA0**

More information

You can find more information on the internet at:

https://support.industry.siemens.com/cs/sc/4923

Contact information for your local Siemens office or national company is available on the internet at:

www.siemens.com/automation-contact

Digitalization Implementation for Machine Tools > Additional Implementation Services > Additional user stations

Overview

Additional user stations allow customers to benefit from the value added of a networked machine tool environment

Additional user stations provide optimum support to the customer for digitalization of their production processes.

- Installation, configuration and testing of an additional of an operator station client (fat client).

Prerequisite:
This service has to be ordered for each station and software module.

Benefits

- Digitalization know-how in hardware, software and IT from a single source

Application

Additional user stations are used where the digitalization of production is heavily dependent on machine tools.

Selection and ordering data

Description	Article No.
Additional user stations Delivery time depends on the availability of our engineers.	**6FC8530-0AC05-0EA0**

More information

You can find more information on the internet at:

https://support.industry.siemens.com/cs/sc/4923

Contact information for your local Siemens office or national company is available on the internet at:

www.siemens.com/automation-contact

© Siemens 2022

Overview

Using SINUMERIK 840D sl hardware-in-the-loop – i.e. connecting a virtual machine model with the real control technology – we help to prepare and provide support for the real commissioning process on a project-specific basis by means of virtual commissioning.

SINUMERIK Virtual Commissioning Services offers a coordinated portfolio and is made up of three sales items.

SINUMERIK 840D sl Virtual Commissioning Consulting

The consulting service offers a reliable assessment of the specific project in terms of feasibility and effort required. It enables a decision to be made in line with requirements. We capture typical and individual commissioning scenarios together with you and establish their feasibility. Modeling and testing costs are also estimated at the same time.

SINUMERIK 840D sl Virtual Commissioning Implementation

Our experts then implement the system based on the consulting services. This involves developing a spatial and mathematical behavior model of the machine using state-of-the-art software tools. The necessary software is licensed by our service department for the duration of the project. The commissioning scenarios agreed during the consulting phase are then tested virtually in close cooperation with you in order to identify and eliminate potential errors at an early stage. The risk of cost-intensive damage and delivery delays is significantly reduced by SINUMERIK 840D sl Virtual Commissioning Implementation.

SINUMERIK 840D sl Virtual Commissioning Training (optional)

If shortened delivery times and faster innovation cycles through parallel process structuring are not only desired for specific projects but across the board, the training course, held by experienced service staff, offers the best possible introduction to the holistic use of SINUMERIK 840D sl Virtual Commissioning. A test system is provided for the training course, which conveys knowledge regarding working with a hardware-in-the-loop solution. The training is held at the customer's location.

Benefits

- Reduction of the risk of damage during actual commissioning coupled with a reduction in the commissioning time.
- Shorter machine delivery times and innovation cycles thanks to parallel processes
- Use of commissioning simulations according to requirements through project-specific consulting
- Improved planning reliability through early fault detection
- No investment costs thanks to full licensing through by our Service team

Application

SINUMERIK Virtual Commissioning Services are a variety of services offered to machine manufacturers for the optimized commissioning of machine tools with SINUMERIK 840D sl (SINUMERIK 840D sl VC Services).

Selection and ordering data

Description	Article No.
SINUMERIK 840D sl Virtual Commissioning Consulting *(MC4R27VC00)* Delivery time depends on the availability of our engineers.	**6FC8530-0VC00-0EA0**
SINUMERIK 840D sl Virtual Commissioning Implementation *(MC4R27VC01)* Delivery time depends on the availability of our engineers.	**6FC8530-0VR00-0EA0**
SINUMERIK 840D sl Virtual Commissioning Training *(MC4R27VC02)* Delivery time depends on the availability of our engineers.	**6FC8530-0VT00-0EA0**

More information

You can find more information on the internet at:

https://support.industry.siemens.com/cs/sc/4832

Contact information for your local Siemens office or national company is available on the internet at:

www.siemens.com/automation-contact

© Siemens 2022

Overview

Digital Enterprise Services

New technological possibilities and rising demands concerning workpiece geometry and quality lead to ever more complex part programs, which now have to be run in on the actual machine in a time-consuming process, sometimes requiring intensive use of materials.

This means a high risk of damage and also reduces productivity. With NX Virtual Machine Tool, Siemens offers a software solution for shifting unproductive and risky actions from the actual machine to the digital twin. The actual machine therefore remains productive and new manufacturing orders can be implemented with less effort and fewer risks.

In addition to the necessary software, users require machine-specific data sets called "machine kits". These contain the virtual image of the actual machine tool and must be set up individually for each machine.

Users currently receive machine kits via the machine tool manufacturer. If a machine manufacturer does not offer NX Virtual Machine Tool, we have the manufacturer-independent alternative in the form of **NX Virtual Machine Tool Services**.

- NX Virtual Machine Tool Services for Builders
- NX Virtual Machine Tool Services for Users

© Siemens 2022

Overview

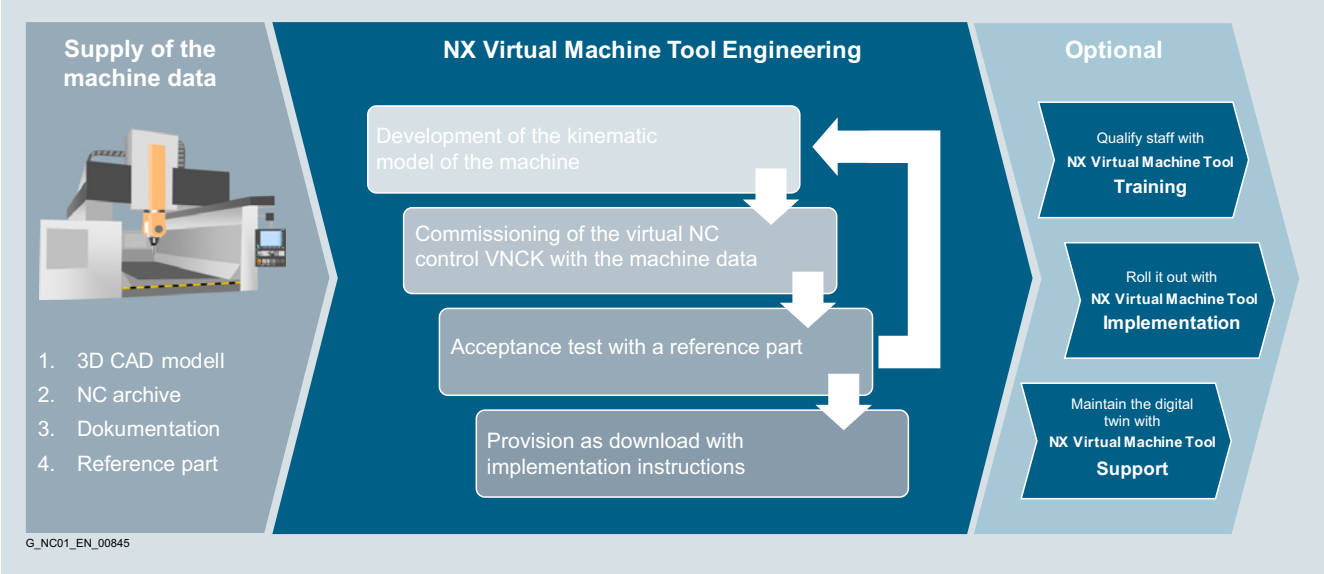

NX Virtual Machine Tool Engineering

With NX Virtual Machine Tool Services for Builders we support machine tool manufacturers by offering machine kits for their customers. This includes training and application support.

NX Virtual Machine Tool Training (Builder)

- Three-day training at your location which addresses all essential topics for the design and integration of NX Virtual Machine Tool
- Based on a standard example or your individual machine (if combined with NX Virtual Machine Tool Engineering for your machine)
- Previous knowledge of programming and commissioning of SINUMERIK 840D sl and the operation of NX CAD/CAM is a prerequisite

NX Virtual Machine Tool Support (Builder)

- Advice and application support for your NX Virtual Machine Tool projects
- Expert assistance on demand when faced with challenges in the preparation of NX Virtual Machine Tool machine kits
- Created by experienced engineers with knowledge of control and simulation technology who have already performed NX Virtual Machine Tool Services for user projects on numerous occasions

© Siemens 2022

Benefits

- Safeguard your competitive edge with our range of solutions for optimizing the productivity of your machines
- Increase your turnover by extending your portfolio to include software and software services
- Reduce project risks through the use of NX Virtual Machine Tool Services

Application

NX Virtual Machine Tools Services for Builders enables machine tool builders themselves to create and offer a digital twin of their machine tool with SINUMERIK 840D sl/SINUMERIK ONE.

Selection and ordering data

Description	Article No.
NX Virtual Machine Tool Training (Builder) *(MC4R26VM12)* Delivery time depends on the availability of our engineers.	**9MC1110-1TN00-0AA1**
NX Virtual Machine Tool Support (Builder) Delivery time depends on the availability of our engineers.	**9MC1110-1EG00-0AA2**

More information

You can find more information on the internet at:

https://support.industry.siemens.com/cs/sc/4994

Contact information for your local Siemens office or national company is available on the internet at:

www.siemens.com/automation-contact

© Siemens 2022

Overview

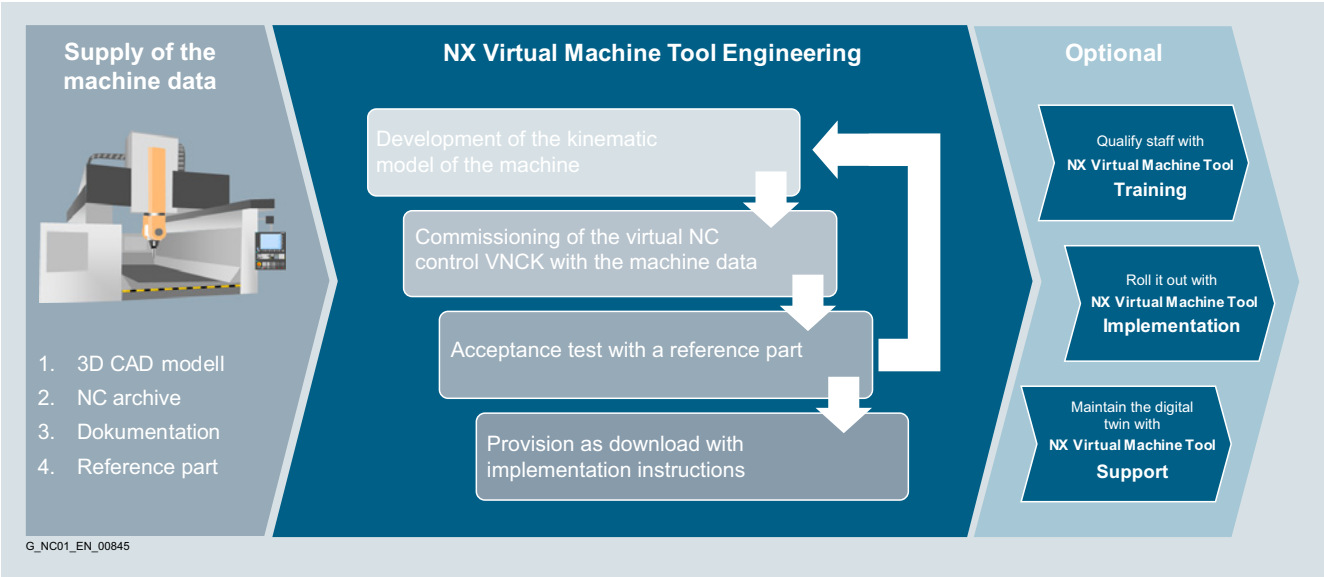

NX Virtual Machine Tool Engineering

With **NX Virtual Machine Tool Services for Users** we offer services for the users of machine tools. The first and most important step here is the Engineering Service. The initial creation of the machine kit from machine data is performed by our engineers and concludes with a test on a reference part. The engineering is supplemented with services offered for the implementation of the software, qualification of employees, and servicing of the machine kit.

NX Virtual Machine Tool Engineering (User)

Based on the data to be provided by the customer (e.g. 3D CAD data such as STEP or PRT, SINUMERIK NC archives, documentation, reference CAM configuration, appropriate NC program, and NC trace of the real machine), an NX Virtual Machine Tool machine kit data record is generated and tested within NX Virtual Machine Tool Engineering (User).

NX Virtual Machine Tool Implementation (User)

The data and software are integrated into the customer's IT environment using NX Virtual Machine Tool Implementation (User). This includes the installation of the Run MyVNCK software on the simulation client, and the integration of the machine kit into a local ASCII library or in Teamcenter MRL. NX Virtual Machine Tool is implemented at the customer's site. To do this, the customer must provide access to their IT system (CAM clients, Teamcenter MRL).

Local administrator rights are required to install the Run MyVNCK software and to incorporate the data sets. Customers must provide the NX Virtual Machine Tool machine kits generated using NX Virtual Machine Tool Engineering (User) on a data storage medium that can be used in the customer's system. Alternatively, it must be possible to download the machine kit to the client involved using SecuFEx.

NX Virtual Machine Tool Training (User)

NX Virtual Machine Tool Training (User) is a one-day training in two parts, which takes place on the customer premises.

The first part is intended for the customer's IT administration and explains the process for integrating the necessary software and data into the customer's IT environment. It also covers the diagnostic functions of the system and explains the procedure in the event of technical problems with the system. The training highlights common errors that can occur during software installation and data integration, and appropriate solutions are presented.

In the second part of the training simulation, users receive an introduction to the use and configuration of NX Virtual Machine Tool. This includes the process for starting a simulation based on NX CAM operations, the processing of external programs, and the orderly stopping and shutdown of the system. Configuration options for the simulation operator panel of NX are presented and explained. Instruction is provided on how to carry out minor modifications to the machine kit (adding of new user cycles).

© Siemens 2022

Overview

NX Virtual Machine Tool Support (User)

With NX Virtual Machine Tool Support (User), the customer receives a certificate with a unique number that guarantees the maintenance by Siemens of a machine kit set up by NX Virtual Machine Tool Engineering (User). If the customer requests maintenance, this unique certificate number must be submitted as proof of their right to maintenance. On taking up NX Virtual Machine Tool Support (User), the customer must make the relevant machine kit available.

If there are changes in the customer's NX CAM environment which necessitate changes to the machine kit, these changes are assessed and applied subject to the conditions of software compatibility. If changes are carried on the real machine, NX Virtual Machine Tool Support (User) permits the creation of a completely new SRAM file based on a new NC archive of the control system once a year. Further changes can be offered on an individual basis. The precondition for adapting the machine kit is the provision of the necessary data by the customer (NC archive, 3D CAD model (STEP or PRT)).

Benefits

- Shorter running-in periods of NC programs on the real machine
- Higher productivity of the real machine by relocating unproductive times onto the digital twin
- Reduction of risk damage for machine, workpiece, and resources by preliminary check for freedom from collision
- Improved planning possibilities due to precise calculation of the program runtime

Application

NX Virtual Machine Tool Services for Users provide end users of machine tools with SINUMERIK 840D sl/SINUMERIK ONE with an individual image of their machine tool which, regardless of manufacturer, is created, integrated, and maintained. Users are then qualified to operate the digital twin.

Selection and ordering data

Description	Article No.
NX Virtual Machine Tool Engineering (User) *(MC4R26VM31)* Delivery time depends on the availability of our engineers. Travel expenses are not included in the price.	**9MC1110-1EG00-0AA0**
NX Virtual Machine Tool Implementation (User) *(MC4R26VM21)* Delivery time depends on the availability of our engineers. Travel expenses are not included in the price.	**9MC1110-1EG00-0AA1**
NX Virtual Machine Tool Training (User) *(MC4R26VM11)* Delivery time depends on the availability of our engineers. Travel expenses are not included in the price.	**9MC1110-1TN00-0AA0**
NX Virtual Machine Tool Support (User) *(MC4R26VM41)* The validity period is 3 years. The service period is then extended automatically by an additional year if timely cancellation is not submitted at least 3 months before the end of the validity period. Travel expenses are not included in the price.	**9MC1110-1AM00-0AA0**

More information

You can find more information on the internet at:

https://support.industry.siemens.com/cs/sc/4994

Contact information for your local Siemens office or national company is available on the internet at:

www.siemens.com/automation-contact

© Siemens 2022

Overview

Drive digitalization with the technologies of the future

Analytics and Artificial Intelligence Services

Take digitalization to the next level and release the efficiency potential of your company! Our service experts offer you individual concepts based on the latest technologies and algorithms. These make it possible to detect and correct systemic faults early on and to optimize maintenance so that you can secure decisive advantages – in quality, costs and productivity.

You can find more information on the internet at:

www.siemens.com/analytics-ai-services

© Siemens 2022

Overview

Data and Process Analysis

Digital Motion Control Services

Deriving optimization measures

Discover your optimization potential and increase your overall equipment effectiveness (OEE). How? By using the collected data to generate knowledge which can be used as the basis for taking correct measures. For example, the OEE is tracked with a monitoring system that ensures constant optimization of production.

We support you in the creation of custom-made dashboards and in the analysis of data. We also show you how to use the information from the evaluation profitably in your maintenance process, enabling you to extend the lifetime of your machines, save money, and improve quality.

Data and Process Analysis – a service for analyzing and optimizing production

Data and Process Analysis is provided for end users utilizing SINUMERIK modules Analyze MyPerformance (AMP) and/or Analyze MyCondition (AMC) to increase their production efficiency.

This service offer includes support from a Siemens consultant in adapting the modules to the respective production process. Subsequently, AMP and AMC data is analyzed by the Siemens consultant together with the customer and measures toward continuous improvement are defined.
Implementation and effectiveness of the recommended measures are evaluated in follow-up meetings.
This will allow improvements to be realized iteratively on a meeting-to-meeting basis. The Siemens consultant provides support for increasing availability, maximizing quality or reducing costs. The customer can specify the focus of the optimization measures.

Service period: 3 years

Scope of performance:

- 10 days, during which a data and process analysis is performed
- Dates are agreed individually with the customer
- Documentation of all analyses, measures and implementations, as well as all significant events, in a service logbook

Benefits

- Enhanced utilization of the individual production machines (increase in productivity)
- Optimum utilization of AMP and AMC
- Avoidance of unplanned machine downtimes (availability)
- Optimum coordination of personnel and machine
- Detection of bottlenecks in the production workflow

Application

Data and Process Analysis are used where production digitalization is heavily dependent on machine tools.

Selection and ordering data

Description	Article No.
Data and Process Analysis ***(MC4R220000)*** The validity period is 3 years. The service period is then extended automatically by an additional year if timely cancellation is not submitted at least 3 months before the end of the validity period.	**6FC8530-0MM01-0EA0**

More information

You can find more information on the internet at:

https://support.industry.siemens.com/cs/sc/4837

Contact information for your local Siemens office or national company is available on the internet at:

www.siemens.com/automation-contact

© Siemens 2022

Overview

Productivity Improvement

Productivity Improvement aims to improve the productivity of machine tools with SINUMERIK 840D or SINUMERIK 840D sl. Productivity Improvement can enhance their productivity by up to around 15%.

When is Productivity Improvement viable?

In general, Productivity Improvement pays for itself in the case of machines that are used intensively, e.g. in 2 or 3-shift operation, with high numbers of machine service hours. Overall, the lifecycle costs are reduced and the manufactured quantities are increased.

Where is Productivity Improvement applied?

The Productivity Improvement service supplied by Siemens starts in the CNC:

The higher computing performance achieved by modernization of the control system hardware shortens all system-related dead times and also supports the use of a new software version. This, in turn, incorporates the important technological advances of recent years,

meaning that high-quality, efficient control algorithms and new productivity-enhancing CNC functions can be used on your machines. The desired productivity improvement is often achieved with just these two measures.

Productivity can be improved even further by other measures, e.g. optimization of CNC programs or of the machine settings.

All these measures shorten the idle times without subjecting the overall mechanical system to higher levels of wear or the electrical system to critical thermal overloading.

How is Productivity Improvement actually performed?

The organizational process for Productivity Improvement follows a defined, quality-assured process:

The general procedure is to disturb normal production as little as possible.

After the electrical equipment currently in use on your machine tool with SINUMERIK and the machining processes have been documented, the potential for productivity improvement is assessed.

The optimization measures requested by the customer are first prepared by Siemens in the laboratory and then verified in a simulation – production at the customer site continues to run normally during this phase. Implementation at the machine is then performed as quickly as possible.

Benefits

- Selective updating of CNC components (software and hardware)
- Implementation of the latest technological functions and optimized execution of the CNC program
- Shorter part production time with the same quality level and therefore reduction in unit costs
- Short machine standstill time thanks to systematic and time-optimized project processing
- Suitable for improving the productivity of older machine tools with SINUMERIK

More information

You can find more information on the internet at:

https://support.industry.siemens.com/cs/sc/2298

Contact information for your local Siemens office or national company is available on the internet at:

www.siemens.com/automation-contact

© Siemens 2022

SINUMERIK Optimization Check

Overview

Find the optimization potential of your SINUMERIK with the SINUMERIK Optimization Check

The SINUMERIK Optimization Check is based on the know-how and the experience of Siemens Mechatronic Support and provides the customer with valuable recommendations on optimum parameter assignment of machines with the SINUMERIK 840D sl or SINUMERIK ONE controller.

With a comprehensive analysis of your provided NC archive and your Auto Servo Tuning (AST) measurements, our service is the answer to the requirements to further optimize productivity and workpiece quality.

- **SINUMERIK Optimization Check**
  Initial optimization check for a machine series with a one-hour consultation with an expert
- **SINUMERIK Optimization Check – Series**
  Follow-up optimization checks for machines of the same series
- **SINUMERIK Optimization Check – Mechanics**
  Provides a clear analysis of the mechanical properties of the machine.

Scope of performance:

- Extensive analysis to identify the potential for optimization, based on:
  - NC archive
  - AST measurements
  - Additional dedicated traces
  - Machine-specific data
- Results with recommendations documented in the form of a report
- One-hour remote meeting to explain the results

Benefits

- Economical and effective possibility for optimizing the machine and drive configuration
- More than 50 optimization options to increase productivity and quality
- Extended service life of the machine
- Detection of many types of quality problems due to standardized mechanical analysis
- Increased productivity

Selection and ordering data

Description	Article No.
SINUMERIK Optimization Check Delivery time depends on the availability of our engineers.	**9MC1110-1PT00-0AA0**
SINUMERIK Optimization Check – Series Delivery time depends on the availability of our engineers.	**9MC1110-1PT00-0AA1**
SINUMERIK Optimization Check – Mechanics Delivery time depends on the availability of our engineers.	**9MC1110-1PT00-0AA2**

More information

For more information about this service and how to prepare and provide your data for SINUMERIK Optimization Check, please visit:

https://support.industry.siemens.com/cs/sc/5417

Contact information for your local Siemens office or national company is available on the internet at:

www.siemens.com/automation-contact

© Siemens 2022

Application

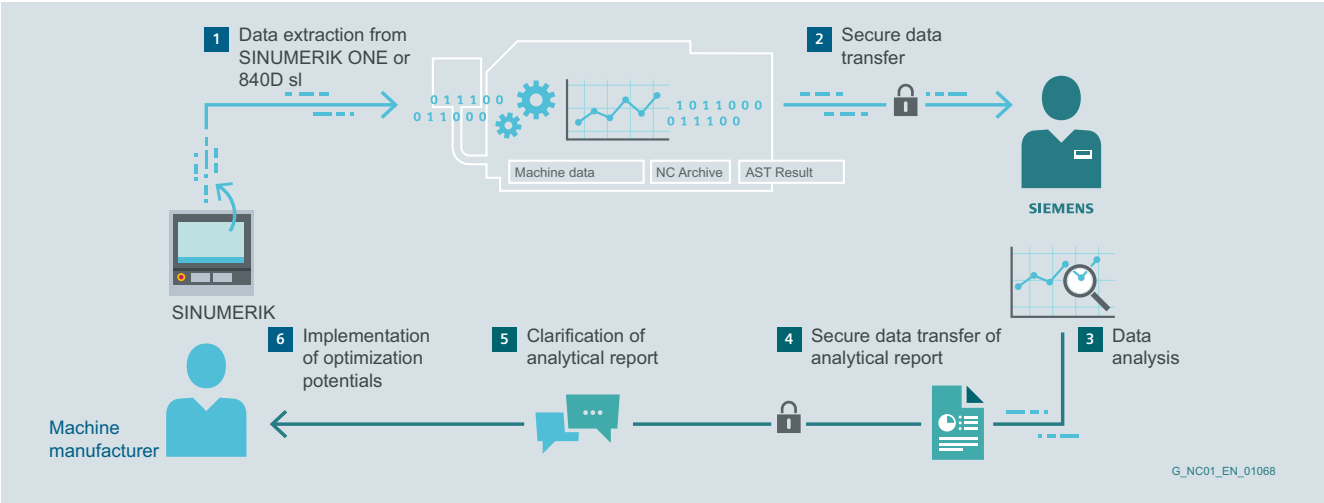

SINUMERIK Optimization Check supports the machine manufacturer with:

- Development of new machine models → Optimum parameter assignment
- Optimization of existing machine models → An upgrade to existing machines can be offered to the customer via the machine manufacturer.
- Maintenance of a quality standard on a series machine → Each machine produced has a quality certificate which guarantees optimum parameter assignment.

© Siemens 2022

Overview

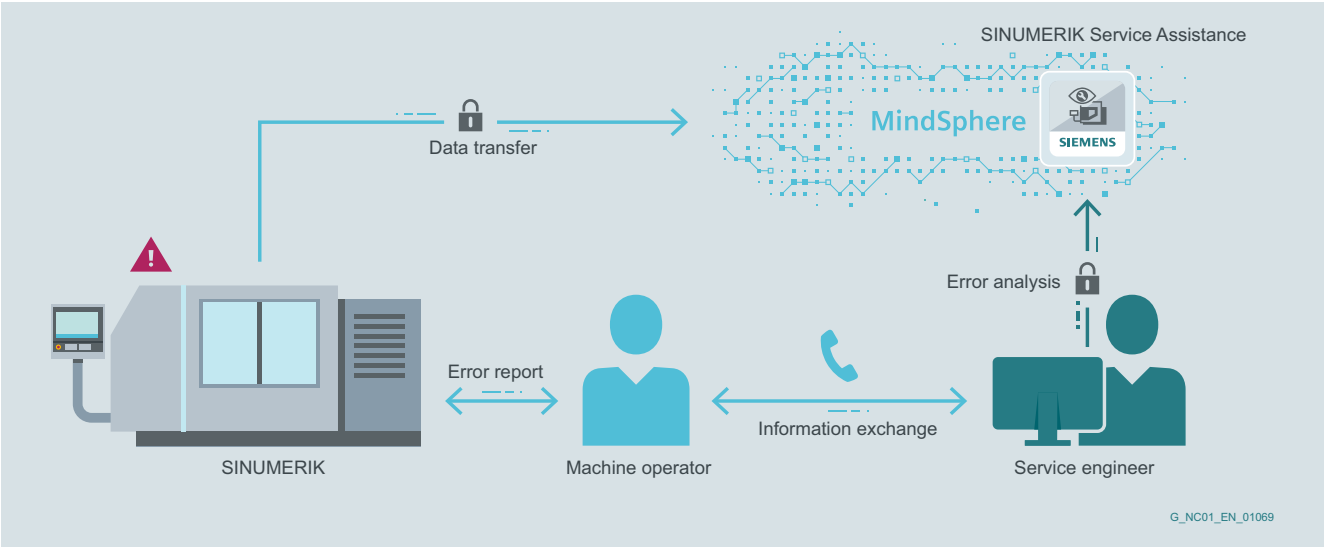

SINUMERIK Service Assistance is a MindSphere application which permits the acquisition of extended status data about the control and drive technology of machine tools and their selective evaluation with the aid of intelligent methods of analysis. Based on the data stored in the application, the service technician can obtain a detailed overview of the current situation and perform initial diagnostics online before the on-site operation is carried out. Due to greater transparency, more precise statements can be made about the current fault situation and the measures required to rectify errors. As a consequence, any service calls required can be carried out more efficiently. This helps reduce downtimes of the customer's machine tool.

The SINUMERIK Service Assistance application can be used as a pure software application or as a contract module of a Local Service Contract. Both direct purchase via order number and ordering via an extension of the service contract are implemented. The following explanations refer to the provision of the software application. Information about use under the Local Service Contract is provided in the Service Contracts chapter and in the Local Service Contract section.

Depending on the required support requirement, SINUMERIK Service Assistance can be provided in various functional variations. These are the elements Machine Transparency, Machine Condition and Error Analysis, which are available individually or combined as a service element. It is also possible to book a Consulting & Customizing advisory and configuration service, and to use a trial version free of charge.

© Siemens 2022

Overview

SSA /Machine Transparency

The SSA /Machine Transparency module enables the automated acquisition of information on the hardware components and software versions used in the machine tool. On this basis a recommendation can be given for a replacement or the selective upgrading of hardware and software components. In this way, improvements can be made in the increased spare parts availability and the productivity of the installation.

SSA /Machine Condition

The SSA /Machine Condition module provides support with the cyclic acquisition of extended status data about the control and drive technology and its selective evaluation with the aid of intelligent methods of analysis. As a consequence, any service calls required can be carried out more efficiently. This helps reduce downtimes of the customer's machine tool.

SSA /Error Analysis

The SSA /Error Analysis module provides help with the identification and evaluation of fault states that occur on the machine tool with a SINUMERIK controller. This makes it possible to identify and rectify potential causes of errors in the machine tool at an early stage.

SSA /Consulting & Customizing

The SSA /Consulting & Customizing service can provide advice with individual concept design when adapting standard solutions (e.g. expanding data acquisition to include additional machine values), taking into account specific constraints in relation to the MindSphere environment and the machine tool under consideration. The scope of the service includes porting old data from the standard solution and supporting implementation of the custom-made configuration of the software application.

SINUMERIK Service Assistance /Trial

The SINUMERIK Service Assistance test license enables free use of the SINUMERIK Service Assistance MindSphere application with the options Machine Transparency, Machine Condition and Error Analysis for the duration of 3 months and with any number of machine tools connected.

Benefits

- Increased plant availability enabled by online diagnostics based on continuous data acquisition and real-time transparency
- Reduced deployment costs through optimization of existing processes using digital service tools
- Improved availability of information and creation of real-time transparency due to secure and cutting-edge cloud technology

Selection and ordering data

Description	Article No.
SSA /Machine Transparency Delivery time depends on the availability of our engineers.	**9MC1110-1AA00-0AA0**
SSA /Machine Condition Delivery time depends on the availability of our engineers.	**9MC1110-1AA00-0AA1**
SSA /Error Analysis Delivery time depends on the availability of our engineers.	**9MC1110-1AA00-0AA2**
SSA / Trial Delivery time depends on the availability of our engineers.	**9MC1110-1AA00-0AA3**
SSA /Consulting & Customizing Delivery time depends on the availability of our engineers.	**9MC1110-1AA00-0AA4**

More information

You can find more information on the internet at:

https://support.industry.siemens.com/cs/sc/5369

Contact information for your local Siemens office or national company is available on the internet at:

www.siemens.com/automation-contact

© Siemens 2022

Overview

Security at all levels

The advancing digitalization of industry also increases the risk of cyberattacks.

Industrial Security is therefore an essential component of digitalization. Our experts for Industrial Security Services are your reliable partner and accompany you through the entire digital transformation process to protect the productivity and availability of your system – because digitalization and cybersecurity go hand in hand.

More information

For more information visit us at:

www.siemens.com/industrial-security-services

© Siemens 2022

Overview

Training Services

Time for learning

The advance of digitalization in industry is changing the way we acquire and process knowledge: We keep learning more and longer – for our work, for our career, and for ourselves. For this reason, efficient and sustainable learning are of great significance to keep abreast of developments. With our Training Services, you can continually expand your knowledge by applying new training methods that are suitable for every type of learning.

Find the right training

How can I find out what knowledge my employees and I myself require? Where and how can I obtain this knowledge? Our experts from SITRAIN and Vizendo offer the right training courses for you – face-to-face, online or virtual.

More information

For more information visit us at:

www.siemens.com/sitrain

© Siemens 2022

Overview

Support in case of a breakdown – by phone or online, anytime and anywhere

Our service experts provide you with comprehensive support, directly from the product manufacturer.

Whether you have technical questions or need urgent product and system support, you can reach us via telephone or support request, or browse through our online support websites.

Just ask your Siemens contact person about the packages available for your individualized support contract.

More information

For more information visit us at:

www.siemens.com/support-services

© Siemens 2022

Overview

Efficient and cost-effective maintenance strategies for the entire product lifecycle

For you as an industry plant operator, maximum system productivity is your top priority.

Regular machine and plant maintenance performed by qualified service experts helps you ensure top plant performance for the long term.

For more information visit us at:

www.siemens.com/field-maintenance-services

Database Services

Overview

Database Services – for increasing the system availability of SINUMERIK Integrate installations

Database Services support end users in utilizing SINUMERIK Integrate (SI) products to optimize their production processes. Database Services are provided by a Siemens consultant to back up, maintain and update the SI database.

The customer decides how and when services are provided, and whether they are performed remotely or at the actual installation site.

Service period: 3 years

Scope of performance:

- 6 dates, to be agreed individually with the customer
- Cyclic backup of relevant database tables, analysis of log files and hard disks, reprocessing of optimum data structure for SINUMERIK Manage MyTool (MMT) using special database scripts
- Documentation of all service-relevant measures in a service logbook

Selective data backup for the SI system is performed within the scope of this service. The service also includes storage optimization and logfile analysis. Database Services increase SI system availability and avoid unplanned maintenance. Database backup supports end users in the event that restoration of the system functions is necessary.

Benefits

- Basis for prompt restoration of the complete functionality of the SI system
- Increase of system availability through controlled data growth
- Less complex commissioning requirements following database loss
- Backup of production data
- Assured performance as a result of data optimization
- Avoidance of unplanned maintenance
- Additional options for long-term archiving and data evaluation

Application

Database Services are used where the digitalization of production is heavily dependent on machine tools.

Selection and ordering data

Description	Article No.
Database Services ***(MC4R230001)*** The validity period is 3 years. The service period is then extended automatically by an additional year if timely cancellation is not submitted at least 3 months before the end of the validity period.	**6FC8530-0MM02-0EA0**

More information

You can find more information on the internet at:

https://support.industry.siemens.com/cs/sc/4838

Contact information for your local Siemens office or national company is available on the internet at:

www.siemens.com/automation-contact

© Siemens 2022

Overview

The Remote Services for Machine Tools as part of the Local Service Contract (see Service Contracts chapter, Local Service Contract section) offer a standardized option for digitizing the reactive customer service. The service comprises remote fault analysis and support for fault rectification on a Siemens SINUMERIK control system by a remote expert from Siemens AG. With the aid of individually adaptable service times and prioritized processing of the remote service requests, it is possible to reduce downtimes and raise the first-time fix rate.

Reduction of non-scheduled downtimes thanks to fast remote support and fault analysis by Siemens Service experts

Reduced service costs by rapid service support and increased availability

High security standards with the use of the latest remote technology

G_NC01_EN_00847

SINUMERIK Remote Service

© Siemens 2022

Overview

The availability of a remote infrastructure is a prerequisite for the use of the Remote Services for Machine Tools offer. This means the technical infrastructure that forms the basis by which the Siemens technicians provide the service.

The two technologies recommended for the machine tool in the context of Remote Services for Machine Tools are cRSP (common Remote Service Platform) and MindSphere:

- cRSP (common Remote Service Platform)
  - Solution 1: Connection via industrial PC or Engineering Station to the Windows cRSP client
  - Solution 2: Use of a dedicated remote gateway (e.g. IPC or SCALANCE Switch)
- MindSphere
  Use of the MindSphere client with
  Manage MyMachines /Remote directly at the machine tool

The choice of technical infrastructure best suited for the application in question depends on various influencing parameters of the machine tools under consideration and should be made jointly with the Siemens experts. The setting up and connection to the remote infrastructure (e.g. cRSP or MindSphere) is not part of the service contract and must accordingly be selected and ordered separately.

Benefits

- Reduction of unscheduled downtimes thanks to fast remote support and fault analysis by Siemens Service experts
- Reduced service costs due to rapid service support and increased service availability
- High safety standards using state-of-the-art remote technology

More information

You can find more information on the internet at:

https://support.industry.siemens.com/cs/sc/4946

Contact information for your local Siemens office or national company is available on the internet at:

www.siemens.com/automation-contact

© Siemens 2022

General overhaul

Overview

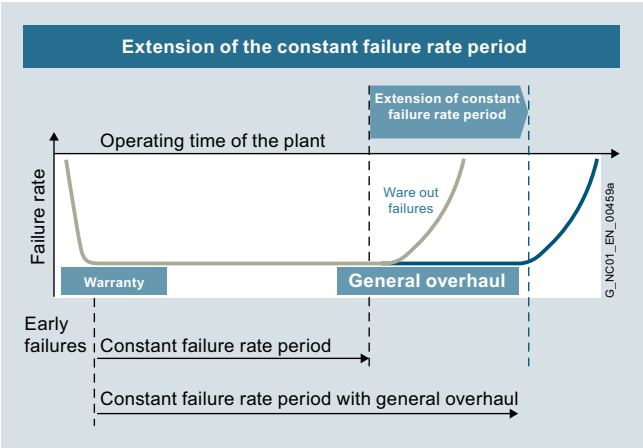

Extension of phases with a constant failure rate

Machines and plants are expected to have a long service life. The service life of electronic components and mechanical parts is, however, limited and normally shorter than the planned machine/plant operating times. For higher availability of the machines or plants, we offer a general overhaul (preventive maintenance) for electronic components and motors at favorable conditions.

During the planned general overhaul, wear parts and aging parts are replaced in accordance with their stated service life so as to reduce unplanned downtimes. In the case of motors, replacement of bearings and encoders is also offered in addition to a general overhaul.

If a fault is detected during a general overhaul, troubleshooting and repair will be performed after requesting confirmation.

In the case of severe wear or major damage, we offer an "as new" spare part instead of a general overhaul for reasons of quality.

Benefits

- Preventive replacement of wear parts and aging parts in accordance with their stated service life
- Reduction in unplanned plant stoppages
- Enhanced production reliability
- Extended availability of your machines/plants
- New liability for defects for 12 months for components which have undergone a general overhaul
- Low price

More information

You can find more information on the internet at:

https://support.industry.siemens.com/cs/sc/2120

Contact information for your local Siemens office or national company is available on the internet at:

www.siemens.com/automation-contact

Function check

Overview

A check is made to ensure that the components function reliably.

The first step involves cleaning the components. After that, all hardware, software and firmware enhancements are implemented that are known to the development, production, suppliers, service and quality management departments. Using a comprehensive test concept of series production, all functions of the software, firmware, ASICs, and complex and less complex function blocks are checked.

If a fault is detected during an overhaul, troubleshooting and repair will be performed after requesting confirmation. In the case of severe wear or major damage, we offer an "as new" spare part.

Benefits

- The component is checked and can be deployed again
- The component contains all the known improvements
- The customer's own spare parts stock is up-to-date
- Low price

More information

You can find more information on the internet at:

https://support.industry.siemens.com/cs/sc/2122

Contact information for your local Siemens office or national company is available on the internet at:

www.siemens.com/automation-contact

© Siemens 2022

Overview

Be safe in an emergency – always the right spare part at hand

Minimum downtimes and optimum use of staff and equipment are key to long-term success in industry.

But when a failure happens, it can bring the entire plant to a standstill in the worst case. Since even the best components will eventually reach the end of their lifecycle, our Spare Parts Services form the essential basis for smooth operation.

For more information visit us at:

www.siemens.com/spare-parts-services

Delivery of spare parts

Overview

In every sector worldwide, plants and systems are required to operate with ever increasing availability. Not having a specific spare part at the right time can result in considerable costs.

We will provide you with the support you need to prevent a standstill from occurring in the first place: with a worldwide network and optimized logistics chains.

Order type	Logistics service	Remark
Standard	Cost-optimized: Contracted shipping company	Delivery within the normal national delivery times by the contracted shipping company
Plant downtime	Time-optimized: Express, courier, collection	You choose the shortest possible delivery time as it suits you best: • Delivery by means of collection or courier service • Delivery by means of express delivery
Emergency service	Special logistics: Courier	Spare parts can be ordered from us 24/7 – even outside normal working hours, as well as on weekends or national holidays. • Delivery by means of courier service

Benefits

- New liability for spare part defects
- Long-term spare parts availability
- Optimum system compatibility

More information

You can find more information on the internet at:

https://support.industry.siemens.com/cs/sc/2112

Contact information for your local Siemens office or national company is available on the internet at:

www.siemens.com/automation-contact

© Siemens 2022

Delivery as exchange product

Overview

With many products, we also offer you the option of an exchange in addition to the simple delivery of spare parts. This has the advantage that you not only receive the spare part quickly, but are able to return the defective device to us for a credit. You therefore receive our spare part at the lower exchange price.

A credit will be awarded on condition that the repair code indicates that repurchasing is admissible, a replacement is obtained from the spare parts store, and that the returned product is repairable.

The order type and logistics service determine the delivery of spare parts:

Order type	Logistics service	Remark
Standard	Cost-optimized: Contracted shipping company	Delivery within the normal national delivery times by the contracted shipping company
Plant downtime	Time-optimized: Express, courier, collection	You choose the shortest possible delivery time as it suits you best: • Delivery by means of collection or courier service • Delivery by means of express delivery
Emergency service	Special logistics: Courier	Spare parts can be ordered from us 24/7 – even outside normal working hours, as well as on weekends or national holidays. • Delivery by means of courier service

Return

For product returns, we require the following information:

- Reason for return
- If defective: detailed description of the fault
- Machine number
- Machine/system manufacturer
- End user

We will then be able to provide you with additional information in the repair report/inspection report regarding the diagnosis/inspection as well as information about the completed repair.

Benefits

- Price benefits through the option of returning defective parts
- A spare part is available immediately in the event of failure
- New liability for spare part defects
- Long-term spare parts availability
- Optimum system compatibility

More information

You can find more information on the internet at:

https://support.industry.siemens.com/cs/sc/2112

Contact information for your local Siemens office or national company is available on the internet at:

www.siemens.com/automation-contact

Component upgrade service

Overview

Upgrade service for components: From OLD to NEW

Machines and plant are expected to have a long service life. The service life of the electronic components is, however, limited and normally shorter than the planned machine/plant operating times. To ensure that the required extended availability of the machines/plants is achieved, we offer an upgrade service for components at an attractive price.

In the course of their lifecycle, electronic components are normally redesigned/upgraded several times. With the upgrade service for components, you will always receive the latest technology.

A planned component upgrade from OLD to NEW helps to prevent unplanned machine stoppages and supports a safer and longer machines/plant availability. The upgrade service is mainly offered for older components that will soon be discontinued.

For information about the latest potential upgrades, please contact your local contact person. The upgrade service for components can only be offered to machine manufacturers or operators.

Benefits

- Price benefit through upgrade service
- New liability for new component defects
- Extended availability of your machines/plants
- Prevention of component failures due to wear and aging
- Prevention of machine stoppages due to unavailability of spare parts
- Reduced spare parts inventories
- Latest technology
- Easier servicing due to fewer variants
- Industry Services through Siemens are assured for the future

More information

You can find more information on the internet at:

https://support.industry.siemens.com/cs/sc/2112

Contact information for your local Siemens office or national company is available on the internet at:

www.siemens.com/automation-contact

© Siemens 2022

Return of diagnostic parts

Overview

Spare parts used for diagnostic purposes from the spare parts store can be returned within 3 months and a credit note for up to 85% is issued.

For unused spare parts in their original packaging, you will receive a credit of 100% in which case you will be charged a fixed price for handling.

Benefits

- Can be used for diagnostics
- Reduced spare parts inventories
- Low costs

More information

You can find more information on the internet at:

https://support.industry.siemens.com/cs/sc/2112

Contact information for your local Siemens office or national company is available on the internet at:

www.siemens.com/automation-contact

Stock reduction in spare parts store

Overview

Fast spare part delivery by Siemens enables manufacturers and plant operators to reduce their spare part stocks. For this purpose, we offer an analysis that shows exactly which parts should remain in the customer warehouse for a particular machine stock and which can be purchased directly from Siemens.

Benefits

- Reduced costs
- Stock optimization
- Minimization of fault downtimes

More information

You can find more information on the internet at:

https://support.industry.siemens.com/cs/sc/2112

Contact information for your local Siemens office or national company is available on the internet at:

www.siemens.com/automation-contact

Extended spare part availability

Overview

We normally retain spare parts for all products and systems for a period of 10 years after discontinuation of product marketing.

In individual cases, when we do not carry spare parts, we will offer a repair.

For a wide range of products and systems, spare parts availability is extended. We can provide you with the current spare parts availability for your machines/plants as a service once you have registered online with identSNAPSHOT.

www.siemens.com/identsnapshot

If you require longer availability of spare parts for your machines/plants, please contact your local contact person.

Benefits

- Higher plant availability
- Security of investment
- Reduction of lifecycle costs

More information

You can find more information on the internet at:

https://support.industry.siemens.com/cs/sc/2112

Contact information for your local Siemens office or national company is available on the internet at:

www.siemens.com/automation-contact

© Siemens 2022

Overview

High quality support in a breakdown – either at your premises or at a certified Siemens workshop

Even the best components eventually reach the end of their lifecycle. The result: downtimes and reduced productivity.

Our Repair Services comprise all service tasks over the entire product lifecycle, from functional maintenance to increasing performance. In this way, our service experts analyze, repair, maintain and optimize your components at Siemens manufacturer level, so that costly downtimes are minimized.

For more information visit us at:

www.siemens.com/repair-services

Downtimes cause problems in the plant as well as unnecessary costs. We can help you to reduce both to a minimum – with our worldwide repair facilities. The advantages for you are: Defects can be rectified before they cause further harm.

Repair is a favorable option when you have specific reasons for not wanting to replace the defective device or part with a new one (delivery as exchange product).

We maintain a global network of Siemens repair shops and certified partners to ensure that we will always be able to process your repairs quickly.

We can offer you different types of repair depending on your requirements:

Normal repair

Normal repair at standard conditions normally takes 10 working days following receipt of the defective item at our repair shop.

Fast repair

In particularly urgent cases, we offer you the option of a fast repair within 1 or 2 working days for many products at additional cost.

Mobile repair service

We come to you and perform the required repairs on site, for example, when the device or component cannot be removed due to its weight.

Function repair

A function repair is the same as a normal repair but excludes the repair of cosmetic defects, e.g. scratches, inscriptions, discoloration. The conditions applicable to function repairs should be observed in this case. The function repair can only be offered to machine manufacturers or operators. Please contact your local contact person for more information.

Long Life Repair

As a rule, a spare parts and repair service is offered for electronics products for a period of up to ten years after the period of active marketing. After this time, these services are generally only available in the case of acknowledged warranty conditions. Not so at Siemens. The Long Life Repair Service is available for selected electronic products and standard motors. Siemens thus offers a complete solution that includes short delivery times, long availability of original spare parts, economical repairs and a service availability of up to 25 years.

Benefits

- Short downtimes for machines and plants
- Only certified original parts are used
- Additional services from Siemens:
  - Longer availability of your machine/plant through the early replacement of wear parts and aging parts
  - Highest standards of quality
  - Use of the comprehensive test concept of series production, including software, firmware, ASICs, complex function blocks, etc.
  - Implementation of all the hardware and software/firmware enhancements known from development, production, suppliers, and service and quality management departments.
- Information supplied by repair report/inspection report

More information

You can find more information on the internet at:

https://support.industry.siemens.com/cs/sc/3098

Contact information for your local Siemens office or national company is available on the internet at:

www.siemens.com/automation-contact

© Siemens 2022

Overview

Bring your industrial plant up to the latest technology standard

Drive trains, automation systems and process technology, as well as machine tools are at the center of industrial plants. They need to work both safely and reliably – often for decades and under harsh conditions.

As a result, they can easily reach their limits, especially in the face of ever-increasing demands. This requires intelligent concepts and solutions that help you, as a plant operator, achieve your productivity and performance goals while protecting your investments.

This is exactly what our Retrofit and Modernization Services stand for.

For more information visit us at:

www.siemens.com/retrofit-modernization-services

Retrofit for Machine Tools

Overview

With Retrofit for Machine Tools, Siemens offers machine modernization in which the individual components are replaced and the machine is upgraded to the latest state-of-the-art.

Maintaining efficient productivity

After a machine tool has been in operation for ten or more years, the condition of its mechanical components is generally still good. In the intervening period, however, there will also have been continuous advances in control and drive engineering – with the development of new functions that allow more precise machining and more energy-efficient, cost-effective production. Retrofits, i.e. the exchange of old for new, offer a means by which older machines can also benefit from these innovations. This process not only replaces technical components, but also exploits the many benefits offered by modern control and drive systems in order to create new business opportunities for the machine owner. The objective is to find a drive and/or control system retrofit solution that can be perfectly integrated into the existing machine concept. The owner then gets to keep the machine that they trust – after it has been upgraded to state-of-the-art – but doesn't need to purchase a completely new unit.

Creating planning reliability

From the viewpoint of machine tool owners, it is not only the new potential offered by modern CNCs that matters but, more importantly, the certainty that an investment in a modernization or upgrade is also an investment in the long-term productivity of the business. This refers in particular to spare parts availability. Spare parts for more recent components will naturally remain available for longer into the future than parts for older components.

Higher performance and greater flexibility

The retrofit offering is in no way restricted to the use of the latest SINUMERIK controls, SINAMICS drive systems and SIMOTICS motors, but can also be expanded by additional services to ensure that the benefits of modernization are fully exploited. These include, for example, a significant boost to quality and flexibility thanks to the performance capability of state-of-the-art components, supported by geometric measurement and compensation of dimensional deviations on large machines.

Modernization prepares the machine for the digitalization process. In conjunction with our Digital Motion Control Services and the products from the CNC Shopfloor Management Software Suite, the productivity of the machine can thus be improved even further.

Benefits

- Comprehensive consultation and reliable implementation by specialists experienced in the fields of modernization, control and drive technology, machine tool technologies and manufacturing processes
- Tailored modernization concepts designed to maintain or improve productivity
- Increased availability of the machine thanks to reliable long-term spare parts supply and services
- Enhanced operating and programming convenience
- Greater safety for personnel and machinery thanks to Safety Integrated
- Improved energy efficiency with SINUMERIK Ctrl-Energy
- Low-cost alternative to a completely new purchase
- Complete modernization from a single source: from the CNC to the drive and motors, as well as IT integration and mechanical overhaul by Siemens partners
- Preparation for digitalization of the machinery
- Reliable, punctual implementation
- Extensive additional services and functions

More information

You can find more information on the internet at:

https://support.industry.siemens.com/cs/sc/2288

Contact information for your local Siemens office or national company is available on the internet at:

www.siemens.com/automation-contact

© Siemens 2022

PCU retrofit for SINUMERIK 840D

Overview

Tailored PCU retrofit for SINUMERIK 840D with HMI-Advanced

With a PCU retrofit solution designed specifically for SINUMERIK 840D, machines with SINUMERIK 840D and HMI Advanced can be partially modernized by Siemens.

Hardware and software components MMC103, PCU 50 and HMI Advanced/HMI Pro with the obsolete operating systems Windows 95, NT, XP are replaced by a SIMATIC IPC with the Windows 10 operating system and HMI Advanced/HMI Pro for Retrofit. In this way, the Windows 10 operating system improves access safety and once again ensures the increased spare parts availability of the hardware components.

Benefits

- Comprehensive consultation and reliable implementation by specialists experienced in the fields of modernization, control and drive technology, machine tool technologies and manufacturing processes
- High productivity due to availability of spare parts
- Enhanced functionality and performance by upgrading software (HMI Advanced) and hardware (NCU)
- Long service life for machine tools with SINUMERIK 840D
- Low-cost alternative to a completely new purchase
- Reliable, punctual implementation
- Preparation for digitalization of the machinery

More information

You can find more information on the internet at:

https://support.industry.siemens.com/cs/sc/4930

Contact information for your local Siemens office or national company is available on the internet at:

www.siemens.com/automation-contact

© Siemens 2022

Overview

Rely on our all-around service packages for peace of mind

Our Service Contracts accompany you as a reliable partner whenever you need fast and effective support.

Consisting of individually configurable service elements tailored to your needs, they not only help you to increase cost-effectiveness for maintenance, optimization, and modernization, they also assist you in reducing wear while at the same time extending the lifecycle of your plant. This is possible both on-site and remotely.

Leaving you free to focus on what you can do best: your core business.

For more information visit us at:

www.siemens.com/service-contracts

Repair Service Contract – subsequent repairs at fixed prices

We developed the Repair Service Contract (RSC) especially for machine manufacturers and machine distributors. It offers subsequent rectification of defects at the machine installation site at fixed prices. With these contract-based services, you can cover the personnel costs and materials costs that are incurred for rectifying any faults on our products after the second commissioning phase at the end customer. The service period can be freely selected.

The personnel services comprise the provision of service personnel, error diagnostics and fault correction on site, as well as verification of fault rectification. The runtime of the contract can extend the period of liability for defects to up to 5 years.

In the case of services that exceed the RSC scope, you can use the regional service or add-on services. This includes extended service periods, agreed response times and preventative measures.

Advantages of the Repair Service Contract:

- Risks that result from liability for defects are limited to fixed prices
- Fault rectification at the machine installation site, without the need for verification of the defect by the machine tool manufacturer or distributor
- Reduced downtimes at the customer site due to stored product data and final destination information

RSC description of performance

Siemens provides for the machine manufacturer and dealer (in the following referred to as customer) at the machine installation site the services described under the scope of services on the components included in the bill of materials of the RSC certificate by Siemens DI.

The RSC is ordered by the customer stating the necessary article numbers, which can be requested from the Siemens sales partner or which are stated in the catalogs and the Siemens Industry Mall. Siemens hands the customer proof of delivery, which concludes the RSC.

Following the final destination notification by the customer, Siemens hands the customer an RSC certificate stating the place of performance and the service period.

The services to be rendered by Siemens shall be called via a service order submitted by the customer. The services must be ordered within the RSC service period.

Place of performance

The service shall be rendered at the machine installation site (in the following called on site). This corresponds to the end customer's country stated in the final destination certificate and his complete address. Services covered by this RSC shall only be provided in the countries listed in the country list.

Scope of services offered

The following services shall be provided:

- Provision of service personnel
  Siemens provides qualified personnel for error diagnostics and fault correction. The services are provided during the usual working hours in the country of installation.
- On-site fault diagnostics
  Fault diagnostics refer to components from Siemens DI which are listed in the bill of materials of the RSC certificate.
- Fault correction on site
  Fault correction is carried out by repairing and/or replacing faulty components by Siemens DI.
- Documentation of the fault correction
  A service report shall be created on site in the end customer's national language; it is then signed by the end customer. One copy remains with the end customer.

© Siemens 2022

Overview

Contract periods / service period

The RSC is offered for the period of liability (warranty period) of the Siemens customers to their end customers. Different RSC periods permit various market requirements to be addressed.

The service period of the RSC begins on the date notified to Siemens in the final destination notification when commissioning has been completed at the end customer's site and ends on expiry of the selected RSC term. The beginning and end of the service period are stated in the RSC certificate[1)].

RSC certificate

The Customer is provided with an RSC certificate once the final destination notification has been handed over. This certificate shall contain the contract number and essential contract data such as machine number, machine type, bill of materials, beginning and end of the service period and the place of performance (address for the provision of services).

Country list

A repair service is offered for the following countries:

Continent	Country/region
Country group 1	
Americas	Mexico, USA
Asia	China, India, Japan, South Korea, Taiwan, Thailand
Australia	Australia
Europe	Andorra, Austria, Belgium, Czech Republic, Denmark, Finland, France, Germany, Great Britain, Hungary, Italy, Liechtenstein, Luxembourg, Monaco, the Netherlands, Poland, Portugal, Romania, Slovakia, Spain, Sweden, Switzerland, Turkey
Country group 2	
Africa	South Africa
Americas	Brazil, Canada
Asia	Indonesia, Israel, Malaysia, Singapore
Australia	New Zealand
Europe	Bosnia-Herzegovina, Bulgaria, Croatia, Estonia, Ireland, Latvia, Lithuania, Norway, Slovenia
Country group 3	
Africa	Egypt
Americas	Argentina, Chile, Colombia, Ecuador, Peru, Venezuela
Asia	Bahrain, Hong Kong, Kuwait, Oman, Qatar, Saudi Arabia, United Arab Emirates (Dubai), Vietnam
Europe	Belarus, Greece, Malta, Russia, Serbia and Montenegro, Ukraine
Countries not listed, for customers with framework contracts only.	

Response time

As a rule, the following response times apply when the RSC is implemented in the case of a machine standstill:

Country groups	
CG 1	Next working day
CG 2	Within two working days
CG 3	Depending on country-specific conditions
Countries not listed	Depending on country-specific conditions, only for customers with framework contracts for the price of the individual contract.

The response time is the time period between the receipt of the service order which has been technically clarified by the customer and the start of travel of the service engineer to the place of performance or the beginning of fault clearance via teleservice. The specified response times apply to "technically clarified fault notifications" within the normal working hours of the region (e.g. Monday to Friday 8 a.m. to 5 p.m.) excluding public holidays.

Spare parts

Spare parts are provided from our central spare parts warehouse or from regional spare parts warehouses using our worldwide spare parts logistics infrastructure. All of the essential spare parts are stocked in our central spare parts stores. Regional spare parts warehouses are adapted to include the components specified in the final destination certificate[2)].

The following components are not defined as spare parts:

- Motors: these are repaired at an authorized repair workshop. For selected motors, Siemens in Germany stocks components for express delivery. These motors can be manufactured and delivered within a few working days. You can obtain the current list from your Siemens sales partner.
- Cables: The delivery times known to you usually apply.
- Special or customer-specific modules and components not available from Siemens as spare parts.

The RSC shall only be processed in accordance with the terms and conditions applying to repair service contracts (RSC) available from your Siemens contact persons

Benefits

- Protection against unknown costs for a fixed price
- RSC can be synchronized with the machine warranty period
- Planning certainty and calculable costs
- Easier processing in service cases
- High machine availability thanks to a fast response to machine faults (contract priority)
- Reduced downtimes thanks to stored product, final destination and contract information
- RSC can be ordered for machine deliveries to numerous countries
- Worldwide service infrastructure with experienced service staff

More information

You can find more information on the internet at:

https://support.industry.siemens.com/cs/sc/4830

Contact information for your local Siemens office or national company is available on the internet at:

www.siemens.com/automation-contact

[1)] For example, in the case of an RSC with 12 months contract period, this is a maximum of 24 months from the transfer of risk (delivery of components).

[2)] Since the export of standard versions (components/system) is subject to a time-consuming official approval procedure, which applies in equal measure to the supply of such components for the purpose of servicing and spare parts supply, we offer **an export version** for individual components. This has usually less options than the standard version of the component and is not subject to an export authorization. Please refer to the **information about export**.

© Siemens 2022

Overview

Repair Service Contract 2.0

For the Repair Service Contract 2.0 for machine tools, the following supplementary options are offered. Contact your Siemens sales office/Regional Company for more information.

Flexible RSC start

Commissioning at the end customer's site can be concluded up to 24 months after delivery of the components installed in the machine. If this takes place later, the service period of the RSC will, however, begin no later than 24 months after the earliest delivery date of an installed DI Siemens component.

Earlier start of the service period

The services of the RSC can already be used before commissioning at the end customer's site. Upon conclusion of first commissioning, an additional service period starts at the place of performance that deviates from the final destination. The service period on site commences with the final destination notification.

The customer is obliged to provide Siemens in writing the following information directly following first commissioning:

- Machine number
- Machine type
- Machining technology
- Control system
- Drive system
- Number of measuring circuits
- OEM application data
- Date of first commissioning
- Country and complete address of the machine manufacturer and, if applicable, of the dealer and the BOM of the components from Siemens DI that are used, with article numbers and serial numbers

The customer then receives a preliminary RSC certificate, which states the start of the additional service period and the current place of performance of the machine. After commissioning at the end customer's site is reported, the customer receives the RSC certificate with the final destination information and the end of the service period.

Extension of an RSC

An existing RSC can be extended multiple times by 6 or 12 months, up to a maximum total RSC duration of 60 months. The contract extension must be ordered during the RSC service period. The customer will receive a new RSC certificate each time.

Data handling

To simplify data handling, information relating to the final destination certificate for SINUMERIK Operate 2.6 and later products can be stored on the CNC. The PC tool identSNAPSHOT is needed in order to transfer the data to Siemens. The PC tool can be run directly without installing it on a computer and is available on the internet at:

www.siemens.com/identSNAPSHOT

The PC tool can also be used to generate final destination certificates for older versions of SINUMERIK CNCs and offers various options for acquiring machine parts lists. The PC tool is also capable of generating machine logbooks in PDF format. The generated data can also be kept with the machine as data backup.

For more information about identSNAPSHOT and handling the bill of materials of components used, please contact your Siemens sales office or Regional Company.

Contract versions

The framework contract is for machine manufacturers who agree to order one RSC for all machines with Siemens equipment.

The individual contract is for machine manufacturers who order an RSC only for certain machines equipped by Siemens.

OEM service levels

To guarantee repair service for OEM applications, an assessment is necessary based on the OEM service guideline. The assessment grades the OEM application from OEM service levels 0 to 4. A surcharge will be levied for OEM service grades 1 to 4.

© Siemens 2022

Selection and ordering data

Description	Article No.
Repair Service Contract	
For Siemens DI components on machine tools for countries in country groups 1 to 3	
• 12 month contract period[1]	**6FC8506-1 ■ X ■ ■ - 0AA0**
• 24 month contract period[2]	**6FC8506-2 ■ X ■ ■ - 0AA0**
• Framework contract	**R**
• Individual contract	**E**
• No option	**0**
• Flexible RSC start	**1**
• Earlier start of the service period	**2**
• Flexible RSC start + earlier start of the service period	**3**
• 0 to 4 measuring circuits[3]	**1**
• 5 to 6 measuring circuits[3]	**2**
• 7 to 8 measuring circuits[3]	**3**
• 9 measuring circuits (basis for ≥ 9 measuring circuits)	**8**
• > 9 measuring circuits[3] (measuring circuit surcharge for RSC > 9 measuring circuits[4])	**0**
Contract extension by 6 or 12 months for Repair Service Contract	
For Siemens DI components on machine tools for countries in country groups 1 to 3	
• Basic RSC 12 months	**6FC8506-0 ■ X0 ■ - ■ AA1**
• Basic RSC 24 months	**6FC8506-0 ■ X0 ■ - ■ AA2**
• Framework contract	**R**
• Individual contract	**E**
• 0 to 4 measuring circuits[3]	**1**
• 5 to 6 measuring circuits[3]	**2**
• 7 to 8 measuring circuits[3]	**3**
• 9 measuring circuits (basis for ≥ 9 measuring circuits)	**8**
• > 9 measuring circuits[3] (measuring circuit surcharge for RSC > 9 measuring circuits[4])	**0**
Contract extension (possible once per basic RSC)	
• By 6 months	**6**
• By 12 months	**1**
OEM service levels	
Surcharge for Repair Service Contract for Siemens components on machine tools with OEM applications. Measuring circuits 1 to n for countries in country groups 1 to 4	
• Surcharge for OEM service level 1	**6FC8506-3SX01-0AA0**
• Surcharge for OEM service level 2	**6FC8506-3SX02-0AA0**
• Surcharge for OEM service level 3	**6FC8506-3SX03-0AA0**
• Surcharge for OEM service level 4	**6FC8506-3SX04-0AA0**

[1] Max. 24 months from the transfer of risk (delivery of components).
[2] Max. 36 months from the transfer of risk (delivery of components).
[3] Physical axes and spindles count as measuring circuits.
[4] Example for 17 measuring circuits: 1 x (basis for ≥ 9 measuring circuits) plus 8 x (measuring circuit surcharge for RSC > 9 measuring circuits).

© Siemens 2022

Overview

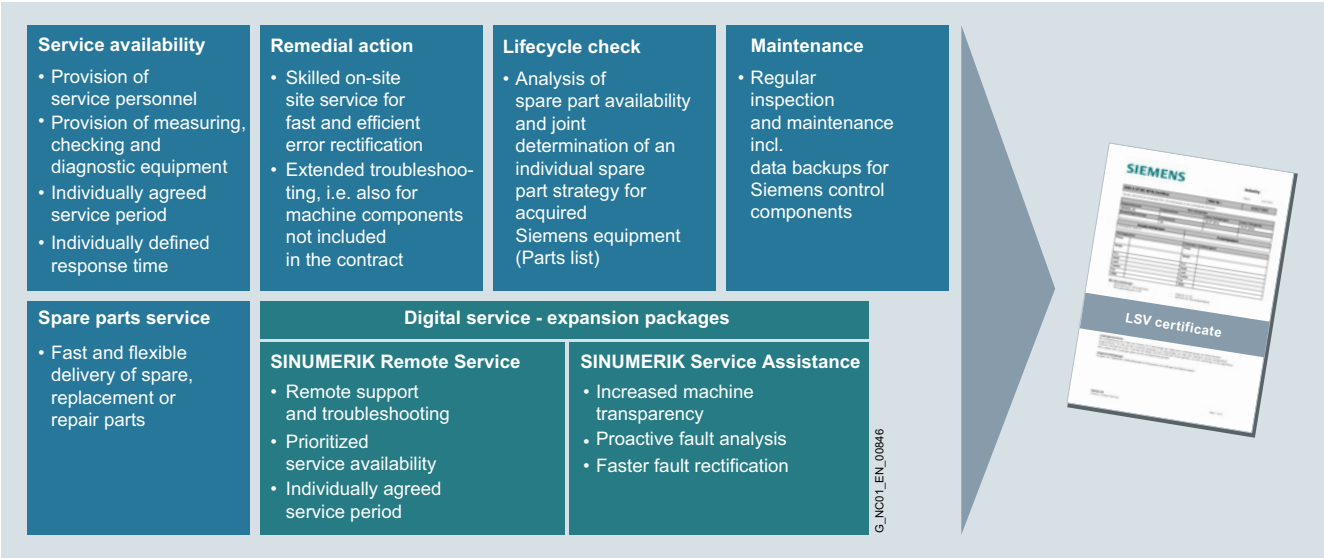

LSC - The modular prevention program

Local Service Contract LSC – the modular prevention program

With the Local Service Contract (LSC), we offer machine users an individual, modular preventive program that ensures the availability of machine tools and manufacturing systems to a considerable extent and therefore makes an important contribution to efficient production.

The scope of the service contract is individually matched to the service concept. We can also offer you our contract-based services outside normal office hours – up to 24 hours a day, 365 days a year. Alternatively, we can offer you our services with faster response times: from the normal "next day" to a 4 hour response time.

Advantages of the Local Service Contract:

- Assured availability through reduction of the machine downtimes
- Plannable costs thanks to agreed service contract prices
- Services tailored to requirements

The complementary and combinable service packs of the Local Service Contract are supplemented by the Digital Service extension packs, making them even more powerful.

Service availability

Qualified service engineers are available to provide the service for the duration of the agreed period of service and within the individually defined response time.

Maintenance

Regular preventive measures, in which the current recommendations of Siemens Quality Assurance are taken into consideration, are performed during the agreed service period.

Remedial action

In accordance with the agreed response time, professional error diagnostics and remedial actions are carried out.

Spare parts service

Includes the spare parts and components required for preventive measures and remedial action.

Lifecycle Check

Our Lifecycle Check service assists you in optimizing your spare parts strategy so as to safeguard your productivity.

- Lifecycle Check – Data acquisition
  Acquisition of all modules in your plant which have control or drive relevance.
- Lifecycle Check – Analysis
  The acquired Siemens modules are analyzed with respect to their availability as a spare/replacement or repair part. Information about estimated phase-out and discontinuation dates and possible replacement types is collected and recorded in a report.
  Support for an optimum spare parts strategy:
  - Demand-based ordering of the Siemens Spare Parts Service
  - Optimization of customer's spare parts inventory (stock reduction)
  - Buyback of spare parts by Siemens on request
  - Punctual availability of upgrades
  - Definition of follow-on solutions/general overhaul
  - Retrofit scheduling

As part of the Local Service Contract, a Lifecycle Check analysis is performed once a year and we will send you a report which specifies the spare parts availability of your components which you can use as a guide for adjusting your spare parts inventory.

Benefits of the Lifecycle Check:

- Increased productivity because plant outages are rare: An optimized spare parts supply keeps downtimes to a minimum
- Reduction in asset and warehousing costs:
  Use of the Siemens spare parts service
- You only store selected spare parts on site:
  Reduce stocks of superfluous parts
- Extension of the plant lifecycle:
  Installation of suitable replacement types

We also offer further services – for example, we compare the components in your spare parts stores with the components installed on your machines and inform you by way of a report of any components held in your stores which have become obsolete for your machines. Or we will show you which of the stored components are compatible as spare parts so that you can reduce your inventory accordingly.

© Siemens 2022

Overview

Remote Services for Machine Tools

The Remote Services for Machine Tools offer a standardized possibility for digitizing the reactive customer service. The service comprises remote fault analysis and support for fault rectification on a Siemens SINUMERIK control system by a remote expert from Siemens AG. With the aid of individually adaptable service times and prioritized processing of the remote service requests, it is possible to reduce downtimes and raise the first-time fix rate.

Reduction of non-scheduled downtimes thanks to fast remote support and fault analysis by Siemens Service experts

Reduced service costs by rapid service support and increased availability

High security standards with the use of the latest remote technology

G_NC01_EN_00847

Remote Services for Machine Tools

The availability of a remote infrastructure is a prerequisite for the use of the Remote Services for Machine Tools offer. This means the technical infrastructure that forms the basis by which the Siemens technicians provide the service. The two technologies recommended for the machine tool in the context of Remote Services for Machine Tools are cRSP (common Remote Service Platform) and MindSphere:

- cRSP (common Remote Service Platform)
  - Solution 1: Connection via industrial PC or Engineering Station to the Windows cRSP client
  - Solution 2: Use of a dedicated remote gateway (e.g. IPC or SCALANCE Switch)
- MindSphere
  - Use of the MindSphere client with Manage MyMachines /Remote directly at the machine tool

The choice of technical infrastructure best suited for the application in question depends on various influencing parameters of the machine tools under consideration and should be made jointly with Siemens experts. The setting up and connection to the remote infrastructure (e.g. cRSP or MindSphere) is not part of the service contract and must accordingly be selected and ordered separately.

© Siemens 2022

Overview

SINUMERIK Service Assistance

The contract option SINUMERIK Service Assistance permits the acquisition of extended status data about the control and drive technology of machine tools and its selective evaluation with the aid of intelligent methods of analysis. Based on the data stored in the application, the service technician can obtain a detailed overview of the current situation and perform initial diagnostics online before the on-site operation is carried out at the customer's. Due to greater transparency, more precise statements can be made about the current fault situation and the measures required to rectify errors. As a consequence, any service calls required can be carried out more efficiently. This helps reduce downtimes of the customer's machine tool.

The SINUMERIK Service Assistance software application included in the service contract application can be used as pure software or as a contract module of a Local Service Contract. Both direct purchase via order number and ordering via an extension of the service contract are implemented. The following explanations refer to use under the Local Service Contract. Further information on provision as a software application is provided in the SINUMERIK Service Assistance chapter.

Shorten unplanned downtimes by direct expert contact and cloud-based data availability for faster fault rectification.

Reducing deployment costs through optimization of existing service processes using digital service tools based on MindSphere

Cloud-based analysis facilitate realtime transparency with continuously improved data analysis.

High security standards through the integration of cybersecurity into the MindSphere system architecture.

G_NC01_EN_00848

SINUMERIK Service Assistance

SINUMERIK Service Assistance consists of different versions that are clearly distinguishable with regard to the function and scope of the service offered, and which can be ordered and used either separately or in combination.

The different versions currently available are as follows:

- SINUMERIK Service Assistance/Machine Transparency
- SINUMERIK Service Assistance/Machine Condition
- SINUMERIK Service Assistance/Error Analysis

SINUMERIK Service Assistance/Machine Transparency

SINUMERIK Service Assistance (SSA) / Machine Transparency permits the automated acquisition of information on the hardware components and software versions used in the machine tool. On this basis a recommendation can be given for a replacement or the selective upgrading of hardware and software components. In this way, improvements can be made in the increased spare parts availability and the productivity of the installation.

SINUMERIK Service Assistance/Machine Condition

SINUMERIK Service Assistance (SSA) / Machine Condition permits the cyclic acquisition of extended status data about the control and drive technology and its selective evaluation with the aid of intelligent methods of analysis. As a consequence, any service calls required can be carried out more efficiently. This helps reduce downtimes of the customer's machine tool.

SINUMERIK Service Assistance/Error Analysis

SINUMERIK Service Assistance (SSA) / Error Analysis permits the identification and evaluation of fault states that occur on the machine tool with a SINUMERIK controller.

This makes it possible to identify and rectify potential causes of errors in the machine tool at an early stage.

© Siemens 2022

Benefits

Calculable costs for maintenance and service

This is what we are offering to machine tool manufacturers, machine distributors and machine tool users with the Extended Machine Contracts option.

In these individually agreed contracts, maintenance concepts are assembled from the following modules: preventative measures, repair, access to Siemens service personnel, service intervals, and spare parts logistics/management.

Here, Siemens accepts the risk of costs through fixed-price invoicing of the services provided (contract cost). With the sole objective of providing tailor-made, efficient support with maintenance.

You remove the risk of unexpected costs and can rely on a high degree of machine availability. The joint agreement ensures access to qualified Siemens service personnel for fault elimination on site as well as professional spare parts logistics, which ensures proximity to the customer.

Additional advantages:

- Planning reliability, reduced and more transparent costs
- Higher productivity thanks to minimal downtimes
- Service packages tailored to requirements
- Supplementing and supporting the service personnel at the manufacturer or end user
- Access to the worldwide service structure of Siemens AG

More information

You can find more information on the internet at:

https://support.industry.siemens.com/cs/sc/3093

Contact information for your local Siemens office or national company is available on the internet at:

www.siemens.com/automation-contact

© Siemens 2022

Overview

Improve your plant performance by bundling compatible services

What are the right maintenance services for your installed assets?

How can you extend the lifecycle of your plant?

Our service programs and platforms provide the answer: You receive service packages that are optimally tailored to a specific product, system or solution. After all, every component has different technical requirements and therefore needs suitable services to reduce maintenance costs and optimize the lifecycle of your plant.

For more information visit us at:

www.siemens.com/service-programs-platforms

Recognizing and exploiting every potential – Digital Motion Control Services for a networked machine world

Consulting

Identify potential

Digitalization begins with us! Together with you, we can detect urgent areas of action for optimizing your production. As part of our professional consultancy, we work alongside you to define your objectives and to highlight the individual opportunities that digitalization offers. If necessary, we also perform a technical inspection of the factory and of the underlying system architecture to determine the potential for digitalization. The result is creation of a digitalization strategy by our experts that is tailored exactly to your needs.

The following services are available:

- Digital Transformation Awareness and Consulting CNC

Digitalization Check as a Service

Creating an implementation plan

In order that you can benefit from a networked machine world, you require a comprehensive database and a hardware assessment. And that is exactly what the Digitalization Check as a Service offers you. We can give you concrete recommendations in order to ensure that your machines are optimally connected to the IT system in your production plants, relying on standardized and scalable solutions. In this way we create a transparent insight into the measures necessary for raising the digitalization capability of your plants.

The following services are available:

- Digitalization Check for Machine Tools

Digitalization and Preparation

Creating the necessary prerequisites

By implementing the recommendations from the Digitalization Check, your machine tools are equipped to the state-of-the art and ready for digitalization. Regardless of whether for greenfield or brownfield plants, we can upgrade your machine pool ready for digitalization with the aid of Brownfield Connectivity Services, software updates, hardware upgrades, or retrofits. After that, the necessary connectivity can be reestablished.

The following services are available:

- Digitalization Preparation – Software Update
- Retrofit for Machine Tools
- Brownfield Connectivity Services

Digitalization implementation

Implementing the digitalization solution

We can help you to use digitalization profitably by implementing the developed design digitalization concept in your plant. The corresponding software modules from the CNC Shopfloor Management Software Suite are installed, configured according to your needs, and put into operation on-site. In this phase your machines are connected to the higher-level IT system. Due to the networking, you can access the data at any time, for example in MindSphere. This data creates the transparency that is the basis for further analyses. Furthermore, our training programs ensure that your personnel are able to make optimum use of your digital transformation.

The following services are available:

- Data and Process Analysis
- SINUMERIK Optimization Check

© Siemens 2022

Overview

Optimization

Improving production processes

We offer the right solutions to enable you to fully exploit the potential for optimizing your machine park – and to convert it into specific benefits for your production system. The main elements here are services such as spare part and repair services, service contracts, and modernization measures such as upgrades, retrofits and productivity improvements.

The following services are available:

- Retrofit for Machine Tools
- Productivity Improvement
- Service Contracts
- Repair Services

Maintenance

Ensure availability

We can take over the maintenance of your IT systems and machines. We therefore supplement our traditional services such as spare parts and repair service through the extension of our service contracts with digitalized add-ons for remote support, greater machine transparency, proactive fault analysis, and faster fault elimination. Moreover, our database management and our software updates guarantee a high degree of availability for your IT system. With us as a reliable partner, you can concentrate fully on your core business.

The following services are available:

- Database Services
- Spare Parts Services
- Repair Services
- Service Contracts
- SINUMERIK Service Assistance
- Remote Services for Machine Tools

More information

You can find more information on the internet at:

https://support.industry.siemens.com/cs/sc/2299

Contact information for your local Siemens office or national company is available on the internet at:

www.siemens.com/automation-contact

© Siemens 2022

Overview

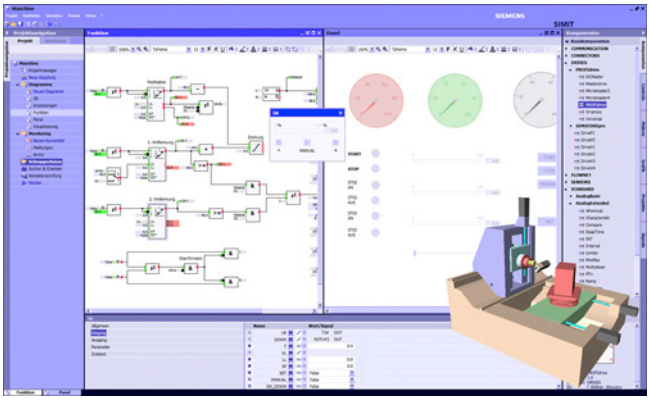

SIMIT for simulating new machines during development

SIMIT allows you to simulate the interaction between your machine tool or production machine and your automation system at all stages of product development, from commissioning through to sales and after-sales.

Long before you finish developing a machine and building a prototype, you can simulate its performance using SIMIT. For this purpose, the automation system is simply coupled with a virtual behavioral model of the machine. This coupling has been optimized for high-performance machine tools and production machines with state-of-the-art control technology from Siemens such as SINUMERIK and SIMATIC.

Your automation system – fully integrated

SIMIT is a simulation system that supports a wide range of hardware and software interfaces to the automation system: PROFIBUS, PROFINET, PRODAVE, PLCSIM, PLCSIM Advanced, SIMIT Virtual Controller, External Coupling, OPC and Shared Memory. If you want to connect the entire Control Unit, e.g. including the CNC, PLC and the Human Machine Interface to a machine model in SIMIT, you can simply use a hardware interface for PROFIBUS. The axis values of the CNC are transferred to the PLC using the software option SINUMERIK Run MyCC /ADAS and thus become visible for SIMIT. SIMIT provides consistent support for the exchange of data with the engineering environment of your automation system.

SIMIT makes simulation as simple as it can be

Even though computer simulation is often regarded as a highly complex process, you do not need to be a simulation specialist to work effectively with SIMIT. All you need to do is operate the ergonomically designed, graphical user interface of SIMIT, while the application itself processes all mathematical and IT procedures associated with the simulation invisibly in the background. Furthermore, a 3D VRML Viewer (integrated in SIMIT) permits simple visualization of machines and plants.

In addition, it can also be connected to tools such as the Siemens PLM Mechatronics Concept Designer via the Shared Memory interface – for extensive 3D physics simulation.

SIMIT – modeling the machine

Based on a modular principle, the simulation model of the machine is created on the SIMIT graphical user interface by the joining together of individual components and Control Units. Simulation elements are simply dragged from the library and dropped into the machine model. The extensive basic library supplied with SIMIT provides you not only with standard arithmetic and logic functions, but also blocks for interfacing a broad range of I/Os of your automation system.

Using SIMIT's component type editor, you can create completely new types of component and use them in your simulations. You can freely define the connections and states of these component types as well as their functional and graphical response, allowing you to work extremely efficiently even when your machine models are complex.

SIMIT Unit

The coupling with SIMIT allows an efficient engineering workflow for hardware-in-the loop simulation. Carrying out load tests and safety tests prior to actual commissioning ensures added protection for personnel and for the machine/system, as well as a reduction in time and costs due to error detection at an early stage.

Simulation of PROFINET

The SIMIT Unit PN offers a comprehensive, reaction-free simulation of the behavior of up to 256 PROFINET I/O devices at the fieldbus in real time.

Simulation of PROFIBUS

The SIMIT Unit PB-2 offers a comprehensive and reaction-free simulation of the behavior of up to 125 PROFIBUS slaves at the fieldbus in real time.

© Siemens 2022

Simulation platform for virtual commissioning

Benefits

- SIMIT combines savings in time and cost with enhanced product quality in machine tool and production machine building. SIMIT supports you during key phases of the development of machine tool and production machine products: development, commissioning, testing, and service.
- The automation solution used, including all of the software modules developed by the machine manufacturer, can be tested with SIMIT in advance and in a reproducible manner – all without having the real "steel and iron" version of the machine at hand.
- A new machine can be tested without being subjected to any risk since proper functioning is checked in virtual reality. After the development work on the new machine has been completed, the virtual machine that has been generated can also be used for training, pre-sales and after-sales purposes.

Integration

Requirements:

- Operating system:
  - Windows 7 Professional SP1 (32/64 bit)
  - Windows 7 Ultimate SP1 (32/64 bit)
  - Windows 7 Enterprise SP1 (32/64 bit)
  - Windows 10 LTSB 2015 (32/64 bit)
  - Windows Server 2012 R2 (64 bit)
  - Windows Server 2016 (64 bit)
- Software option
  SINUMERIK Run MyCC /ADAS axis data output via PROFIBUS

Function

Four software packages ranging from SIMIT Engineering S to SIMIT Engineering XL are graded in accordance with the project size. SIMIT can therefore be ideally adapted to all individual requirements. The software packages do not have any differences in functionality.

The following functions are available for SIMIT Engineering:

- Portal view with workflow management for creation of the simulation project
- Standard components library
- 3D viewer based on the Virtual Reality Modeling Language (VRML)
- Interfaces for PROFIBUS DP, PROFINET IO, and PRODAVE
- Interface for SIMIT Virtual Controller and OPC DA
- Trends and messages (TME)
- Scripting environment
- Editor for the creation of macro components (MCE)
- Editor for the creation of dynamic graphics and animations (DGE)
- Automatic Control Interface (ACI)
- Automatic generation of signal lists from SIMATIC Manager data
- Runtime for components developed using the component type editor
- Interfaces S7-PLCSIM, S7-PLCSIM Advanced, OPC UA and Remote Control
- Change of the simulation model during runtime
- Simulation in a virtual period
- Engineering efficiency for SIMATIC PCS 7 (SMD)
- Automatic generating of models based on templates
- Bulk engineering
- Shared Memory interface as high-performance coupling
- XML interface for the automatic generation of models and connections
- Development environment CTE for own components (optional, not included in the engineering package)

More information

You can find additional information on the internet at:

www.siemens.com/simit

Or please contact:

Siemens AG

SIMIT Infoline

Email: simit@siemens.com

© Siemens 2022

Selection and ordering data

Description	Article No.
SIMIT Simulation Platform For operating systems Windows 7 SP1 Professional/ Ultimate/Enterprise (32/64 bit) Windows 10 LTSB 2015 (32/64 bit) Windows Server 2012 R2 (64 bit) Windows Server 2015 (64 bit) Engineering Software, software class A Floating License for 1 user Type of delivery: Software and electronic documentation on CD-ROM, Certificate of License, license key dongle[1)] Languages: English, German	
• SIMIT SP V10.0 Engineering S	**6DL8913-0AK00-0AB5**
• SIMIT SP V10.0 Engineering M	**6DL8913-0BK00-0AB5**
• SIMIT SP V10.0 Engineering L	**6DL8913-0CK00-0AB5**
• SIMIT SP V10.0 Engineering XL	**6DL8913-0DK00-0AB5**
SIMIT Software Update Service For SIMIT Simulation Software Subscription contract for 1 year with automatic renewal[2)] Requirement: Up-to-date software version	
• SIMIT SUS V10.0 Engineering S	**6DL8913-0AX00-0AL8**
• SIMIT SUS V10.0 Engineering M	**6DL8913-0BX00-0AL8**
• SIMIT SUS V10.0 Engineering L	**6DL8913-0CX00-0AL8**
• SIMIT SUS V10.0 Engineering XL	**6DL8913-0DX00-0AL8**
SIMIT Simulation Platform Software upgrade from V9.1 to V10.0 Engineering For operating systems Windows 7 SP1 Professional/Ultimate/Enterprise (32/64 bit) Windows 10 LTSB 2015 (32/64 bit) Windows Server 2012 R2 (64 bit) Windows Server 2015 (64 bit) Engineering Software, software class A Floating License for 1 user Type of delivery: Software and electronic documentation on CD-ROM, Certificate of License[3)] Languages: English, German	
• SIMIT SP UG V9.1 → V10.0 Engineering S	**6DL8913-0AK00-0AE5**
• SIMIT SP UG V9.1 → V10.0 Engineering M	**6DL8913-0BK00-0AE5**
• SIMIT SP UG V9.1 → V10.0 Engineering L	**6DL8913-0CK00-0AE5**
• SIMIT SP UG V9.1 → V10.0 Engineering XL	**6DL8913-0DK00-0AE5**

Description	Article No.
SIMIT Simulation Platform Software Component Type Editor For operating systems Windows 7 SP1 Professional/Ultimate/Enterprise (32/64 bit) Windows 10 LTSB 2015 (32/64 bit) Windows Server 2012 R2 (64 bit) Windows Server 2015 (64 bit) Floating License for 1 user Languages: English, German	**6DL8913-0EK00-0AB5**
SIMIT Unit PB-2 2-channel interface module for SIMIT For simulating up to 125 PROFIBUS DP slaves in a PROFIBUS DP master system per channel	**9AE4122-2AA00**
SIMIT Unit PN128 1-channel interface module for SIMIT For simulating up to 128 PROFINET I/Os	**9AE4120-2AA00**
SIMIT Unit PN256 1-channel interface module for SIMIT For simulating up to 256 PROFINET I/Os	**9AE4120-2AB00**
SIMIT Consulting Consulting on a daily basis, customer-specific training Type of delivery: written contract	**9AP1471-2AD00**

1) Use only in connection with valid license/dongle.

2) Under this contract, you receive all current software versions for a period of 1 year. The contract is automatically extended by a further year unless canceled 3 months prior to expiration. Period of delivery and service: 1 year from date of invoice.

3) Use only in connection with valid SIMIT V9.1 license/dongle. Activation through SIMIT license hotline required.

© Siemens 2022

Automatic door controls for machine tools

Overview

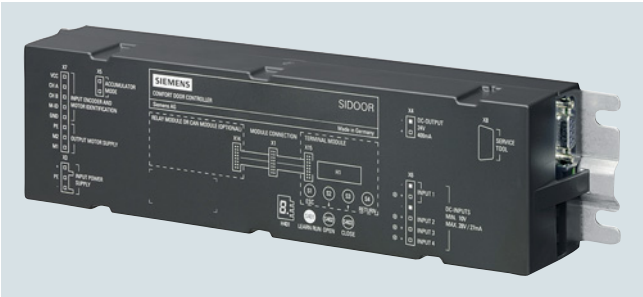

Door control system is the general term for a controller of access systems.

The SIDOOR product family is primarily intended for the operation of sliding doors. These doors can be operated both horizontally and vertically.

Door control systems are characterized by the fact that there are always two defined states for the open and closed position of the door.

The door is always checked, controlled and operated between these positions according to the guidelines of the respective application.

In a defined learn run via 1-button operation, the door system independently determines the values for the door width, the dynamic door weight and the drive direction of the geared motor and stores these data in a non-volatile memory.

Benefits

- 1-button operation for the entire commissioning process
- Optimum and stable drive characteristics
- Reduced service requirements and costs
- Small footprint thanks to compact design
- Automated functions for enhanced safety

Design

The machine tool door drive is comprised of a controller and a maintenance-free drive unit, the geared motors.

Controllers are electronic controllers connected to the power supply via an external power supply unit (SIDOOR NT40, SIDOOR Transformer). They are generally connected to the higher-level controller via digital or fieldbus interfaces, and can be configured via a user interface.

Various controllers for doors weighing up to 600 kg (1323 lb) are available for machine tool doors.

Function

The safe functions - force limitation, energy limitation and end position detection - fulfill the requirements according to DIN EN ISO 13849-1:2008 for Category 2 and Performance Level d. The drives are suitable for power-operated guards according to EN 953:1997+A1:2009.

The geared motors are the maintenance-free drive unit of the door drive. The geared motors are DC motors with non-self-locking gearing, and are speed-controlled. The set force and speed limits are not exceeded.

Operation of the door drives listed here does not require a limit switch. The door width and the "OPEN/CLOSED" positions are determined automatically.

Forces are transferred via a toothed belt. The toothed belt passes over a deflector pulley, and can be fitted with 2 clutch holders. This enables it to drive both single-sided and centrally-opening doors.

More information

You can find additional information on the internet at:

www.siemens.com/sidoor

© Siemens 2022

Overview

Sinorix al-deco PLUS are automated object protection systems for machine tools that are safe for personnel. Sinorix al-deco PLUS fights the fire where it breaks out – in the machine tool – without posing a risk to people, the environment, or technical components.

European law requires an integrated fire protection system for oil-cooled machine tools with fire risk. Sinorix al-deco PLUS object protection systems meet the highest safety requirements in accordance with the Machinery Directive 2006/42/EC. Sinorix al-deco PLUS is characterized by worldwide unique operator protection, ensures detection and extinguishing in current-free operation as well as online monitoring and automatic recording of all safety-related functions.

The Sinorix al-deco PLUS object protection system satisfies all relevant safety regulations and standards - in accordance with EN ISO 13849-1:2015, Category 4 Performance Level e – and therefore has the CE approval including a type test certificate.

Benefits

- Fire extinguishing system with maximum safety for personnel, machine and environment
- Object protection system with safest operator protection worldwide
- Detection and extinguishing success even without cleaning and maintenance work ensured
- Insensitive to all kinds of technical interferences
- Log file of all system data for verification purposes
- 2-channel monitoring for all safety-related functions.
- Use of self-monitoring components
- Double-secured blocking of extinguishing activation when machine door is open
- Only a qualified person is allowed to perform two-channel locking of the machine door after tripping of the system

Design

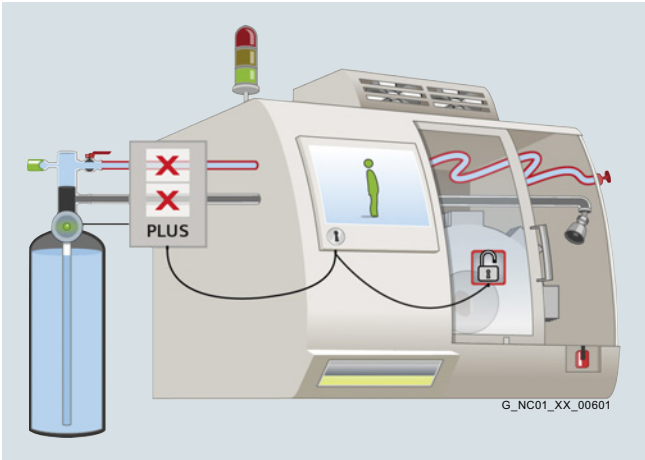

2-channel signals:

- Emergency Stop
- Protection zone closed and locked feedback message
- Interlocking of protection zone
- Mode selector switch
- Automatic-operation
- Manual operation (without object protection system)

Function

Sinorix al-deco PLUS object protection systems correspond to the highest safety requirements in accordance with the new Machinery Directive 2006/42/EC and offer unique operator protection. This is ensured by double-secured cable routing in conjunction with redundant and self-monitoring components. Thanks to this technology, the machine tool cannot be operated until successful completion of a system check – and the machine door is unlocked only after successful and tested blocking of the extinguishing activation.

Sinorix al-deco PLUS ensures that the intended functions are carried out only if they do not endanger the safety and health of persons. This applies in particular if oxygen suppressing extinguishing media are used.

Using Sinorix al-deco PLUS, fire detection and extinguishing are purely pneumatic – without electrical power supply and independent of the machine tool. As a result, Sinorix al-deco is insensitive to all kinds of technical interferences, and it is foolproof. This ensures continuous machine operation and reduces the maintenance overhead.

More information

You can find additional information on the internet at:

www.siemens.com/sinorix

© Siemens 2022

Overview

Systems Engineering Plant Chemnitz (WKC) - Electrical equipment for machines and plants

The Siemens Systems Engineering Plant Chemnitz (WKC) is the European market leader in control cabinet construction for machine tools and manufactures equipment for numerous segments the machine and plant construction industry, as well as for project business in the logistics and automotive sectors.

WKC - Control cabinet wiring

Scope of services offered

The WKC offers a complete portfolio of services for development and production: From concept support and hardware engineering, construction including complete material procurement to testing, advance commissioning support and worldwide inbound delivery. Each customer decides individually what extent of these services the WKC is to provide.

WKC - Engineering - SSB

Competence center for standardization and air conditioning

The WKC is also competence center for the air conditioning of switchgear, has its own test laboratory, and is a certified UL Panels shop. Siemens WKC therefore is happy to support you with advice on design in accordance with standards and concepts for your drive systems, control, operation and safety. In addition, our engineers configure for you in EPLAN and other CAD systems, execute Design-To-Cost projects, and adapt your documents where necessary to UL or new automation and digitalization technologies.

WKC - Test laboratory - Heat measurement

© Siemens 2022

Overview

Individual support and maximum flexibility

Our technical consultants for complete equipment support customers and sales departments in the various regions. Our customers are supported by job centers and permanently assigned manufacturing teams. As a customer, you will benefit from individual logistics models, flexible production capacities and production areas, change management in all process phases, as well as maximum flexibility for your orders. Distance is no problem: For coordination with our customers, we use various digital communication and business applications with user-friendly and powerful functions for screensharing, videoconferencing, file transfer, as we all options for a customer acceptance via webcam (mobile circuit meeting room).

WKC - Automated testing SICAT

Your advantages

We offer complete services from a single source with Siemens quality and stability, extensive specialist support, and flexible resources. We will be glad to accompany you into international markets as well. With us you have a strong partner at your side - from the design stage to final delivery. Whether for series or individual units, Siemens WKC works together with you to implement your projects according to your requirements.

Overview of the portfolio of services

Order coordination

- Project manager with permanent customer assignment
- Complete material purchasing
- Change management in all process phases

Manufacturing

- Creation of a digital twin
- CNC processing of enclosure parts and mounting plates
- In-house painting
- Auto-routing of the wiring
- Automated prefabrication of cables
- Production teams with permanent customer assignment
- Batch or flow production

Automated test (standard)

- Current path test
- Function of switching, operating and signaling devices
- Observance of protective measures and safety

Optional test services / pre-commissioning

- Error-free function of the programmable controllers / I/O devices
- Parameterization and checking of bus systems
- First commissioning of Siemens NC and PLC
- Installation of customer software

WKC - Collaborative robotics

© Siemens 2022

Overview

Additional services for different project phases

Our portfolio is supplemented by a host of additional services for many different project phases.

Planning

- Evaluation of requirement specifications, requirements
- Advice regarding standard applications and certifications (conformity)
- Advice regarding EMC, air conditioning, and electrical safety
- Design-To-Cost analyses
- Special rated conditions

Implementation/realization

- Creation of an electrical design in various CAE systems
- Creation of an air conditioning design through calculation and simulation
- CAE revision of production documents

Validation/certification

- International standard and certification know-how, e.g.: IEC 60204-1, IEC 61439, UL or cULus
- Checking of air conditioning / EMC designs in own Siemens laboratory or at customer premises
- Execution of EMC precompliance measurements in own laboratory or at your plant location

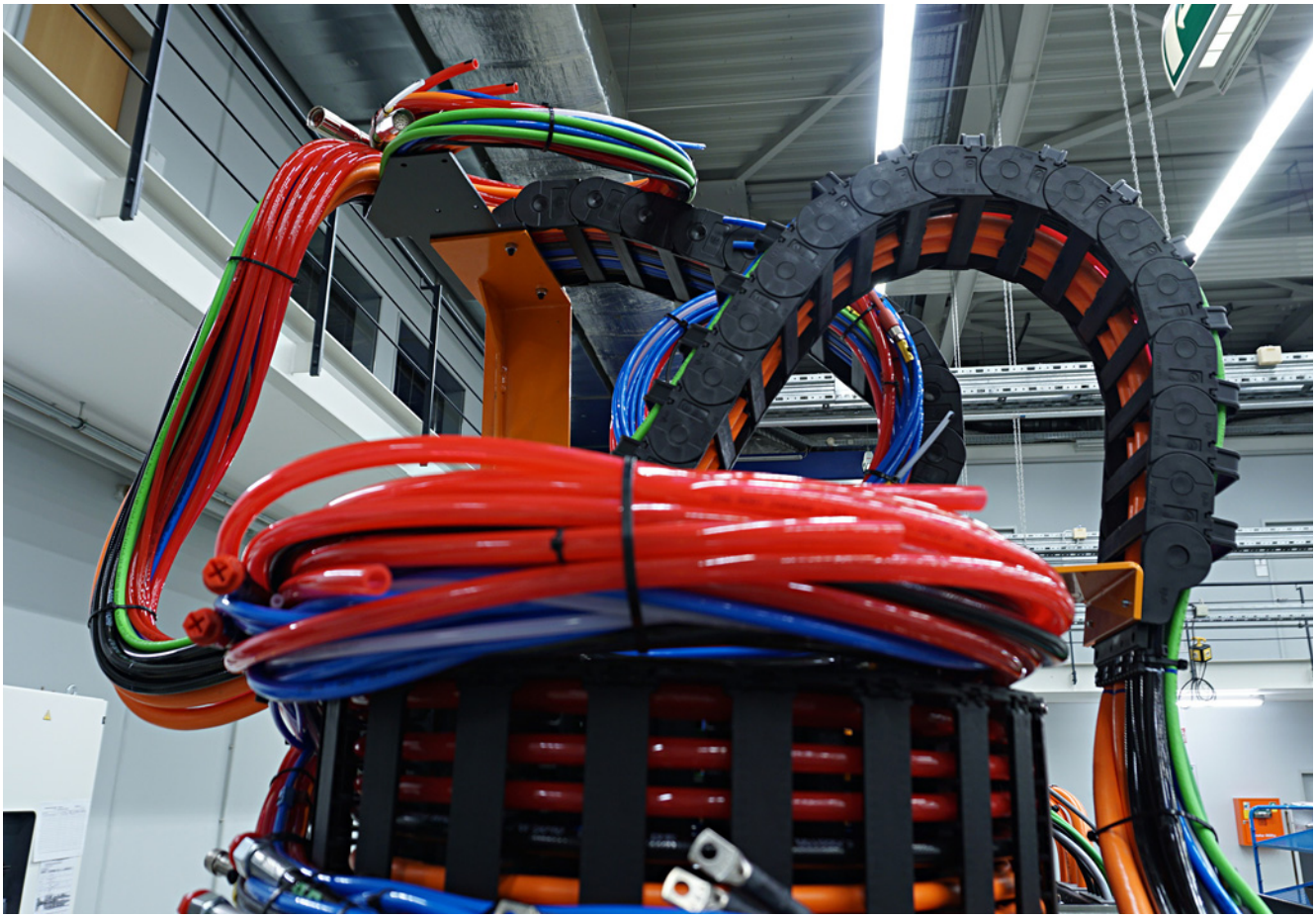

WKC - Additional service - Festoon cable system

More information

You can find additional information on the internet at:

www.siemens.com/panelbuilding

Or contact us by

email: info.wkc.industry@siemens.com

© Siemens 2022

Logistics solutions for our customers

Overview

Flexible, uniform, successful

With this motto we offer powerful logistics for our products individually tailored to your requirements, and uniformly from order up to delivery.

We optimize the complete logistics process between Siemens DI Motion Control and you.

This helps you design your own processes faster, more simply and more cost-effectively.

Many of our customers have already chosen these solutions in various combinations.

Benefits

Customer-oriented logistics solutions

- Modular range of services
- Tailored to your own logistics
- Flexible and reliable fulfillment of demands

Customer-specific configuration

- Provision of complete packages
- Customizing

Production-based delivery

- Machine-based generation of package
- Oriented according to your assembly sequence
- Low packaging overhead due to reusable containers for scheduled deliveries

Global network for uniform logistics

- Utilization of Siemens transport network
- Tracking and tracing throughout the complete transport route
- Competence in export and customs processes

Optimized customer connections

- Delivery on exact date according to schedule
- Directly to assembly location using ship-to-line

Modules	Service	Specification
Complete delivery	• Packages, bundling • Total equipment • Procurement	Combination into complete equipment packages; procurement of material from other production locations.
Customer-specific configuration/ sorting	• Machinery package • Stowage plan • Installation • Tests	Machine packages, also assembled according to stowage plan; pre-assembly of components into units, and their testing.
Labeling Delivery documents	• Customer material number/ID No. • Customer designation • Barcode • Language	Customer specification in form of number and text on the delivery note, plus barcode (DIN 39) on product packaging. Language can be selected according to Siemens guideline.
Packaging versions	• Standard carton • Pallet • Reusable container • Air freight container • Sea freight container • Wooden boxes compliant with IPPC regulation	Application-oriented packaging from standard cartons to freight containers. Special packaging for pre-assembled units. We always select our packaging materials considering their environmental compatibility.
Export handling	• Export declaration • Customs formalities • Worldwide • Multi-partner/region handling	Export handling up to the customer and also to his partner in a third country, based on the export and customs specifications of the respective countries.
Direct shipment (volume-dependent)	• Fixed date • Tour • Ship-to-line	Direct shipment on fixed, agreed days, directly to the installation site if required. Exchange of reusable packaging.

© Siemens 2022

SINUMERIK 840D sl VC Rack

Application

The SINUMERIK 840D sl VC Rack is a compact, ready-to-use SINUMERIK CNC which can be used as a commissioning system for virtual commissioning solutions. The VC Rack is designed for use in an industrial office environment.

In the SINUMERIK 840D sl, the VC Rack provides an integrated, comfortable mounting position for a SIMULATION UNIT that facilitates a PC-based machine simulation.

The complete virtual commissioning solution for machine tools facilitates virtual, risk-free commissioning in an office environment of CNC, PLC and operate configurations before the real machine actually comes into existence.

Design

- Case with rollers and compartment for accessories
- SINUMERIK 840D sl with NCU 720.3B PN (PLC 317-3 PN/DP)
- CNC software 31-3 with SINUMERIK Operate for NCU on CompactFlash card
  Software version 4.5 SP5 single license
- SINUMERIK TP 015A operator panel front
- SINUMERIK TCU 20.2 Thin Client Unit
- SINUMERIK MCP 483C PN machine control panel
- SITOP smart PSU100S, 24 V DC/20 A

Technical specifications

Article number	6AG1067-1AA30-0AA1
Product brand name	SINUMERIK
Product designation	SINUMERIK 840D sl VC Rack
Supply voltage for 1 AC	230 V
Line frequency	50 Hz
Degree of protection	IP20
Ambient temperature, during	
• storage	0 ... 60 °C (32 ... 140 °F)
• transport	0 ... 60 °C (32 ... 140 °F)
• operation	5 ... 40 °C (41 ... 104 °F)
Width	420 mm (16.54 in)
Height	600 mm (23.62 in)
Depth	340 mm (13.39 in)
Net weight	18 kg (39.7 lb)

Selection and ordering data

Description	Article No.
SINUMERIK 840D sl VC Rack Commissioning system for virtual commissioning solutions	**6AG1067-1AA30-0AA1**

© Siemens 2022

SINUMERIK 840D sl training case

Application

The training case is used for practicing the commissioning and servicing of the SINUMERIK 840D sl in a realistic situation. The SINUMERIK 840D sl training case is supplied with the PLC program ready for demonstration.

The SINUMERIK OP Touch training case is required for operation. Both training cases can also be used in presentations.

Design

- Case with rollers
- SINUMERIK 840D sl with NCU 720.3 PN and CF card
- SINAMICS drive for 2 axes
- 2 × 1FK7022 SIMOTICS motors with DRIVE-CLiQ interface
- Incremental and absolute measuring system

Function

The user of the training case has to request a test rack license for the software separately.

Technical specifications

Article number	6ZB2410-0BP00
Product brand name	SINUMERIK
Product designation	SINUMERIK 840D sl training case
Supply voltage for 1 AC	230 V
Line frequency	50 Hz
Degree of protection	IP00
Ambient temperature during	
• storage and transport	-5 ... +60 °C (23 ... 140 °F)
• operation	5 ... 40 °C (41 ... 104 °F)
Width × height × depth	450 × 700 × 500 mm (17.72 × 27.56 × 19.69 in)
Net weight	42 kg (92.6 lb)

Selection and ordering data

Description	Article No.
SINUMERIK 840D sl training case The user of the training case has to request a test rack license for the software separately. The SINUMERIK OP Touch training case is required for operation.	**6ZB2410-0BP00**

SINUMERIK OP Touch training case

Application

The SINUMERIK OP Touch training case is suitable for training and acquisition. It is suitable for operating the SINUMERIK 840D sl training case.
Both training cases can also be used in presentations.

Design

- Hard-top case
- Operating unit SIMATIC ITC2200 with IPC427E and SINUMERIK Operate
- SINUMERIK MCP 398C machine control panel with EM131

Technical specifications

Article number	6ZB2410-0BL00
Product brand name	SINUMERIK
Product designation	SINUMERIK OP Touch training case
Supply voltage for 1 AC	230 V
Line frequency	50 Hz
Degree of protection	IP00
Ambient temperature during	
• storage and transport	-5 ... +60 °C (23 ... 140 °F)
• operation	5 ... 40 °C (41 ... 104 °F)
Width × height × depth	760 × 680 × 400 mm (29.92 × 26.77 × 15.75 in)
Net weight	20 kg (44.1 lb)

Selection and ordering data

Description	Article No.
SINUMERIK OP Touch training case Is used for operating the SINUMERIK 840D sl training case.	**6ZB2410-0BL00**

© Siemens 2022

SINUMERIK 840D sl training rack

Application

The SINUMERIK 840D sl training rack is used for the realistic practice of operating, programming, installation and service tasks.

Design

- SINUMERIK 840D sl with NCU 720.3B PN and CF card
- SINUMERIK NX10.3
- SINAMICS S120 Active Line Module 16 kW
- SINAMICS S120 Active Interface Module 16 kW
- Operating unit SIMATIC ITC2200 with IPC427E in neutral design
- MCP 398C machine control panel with EM131
- Motor Module PROFISAFE I/Os

The SINUMERIK 840D sl training rack is fully equipped and carries the CE mark; the adaptation programs are installed. Customer-specific adaptations can be made.

Technical specifications

Article number	6ZB2410-0BM00
Product brand name	SINUMERIK
Product label	SINUMERIK 840D sl training rack
Supply voltage for 3 AC	400 V
Line frequency	50 Hz
Degree of protection	IP00
Ambient temperature during	
• storage and transport	-20 ... +60 °C (-4 ... +140 °F)
• operation	5 ... 40 °C (41 ... 104 °F)
Width	630 mm (24.80 in)
Height	1720 mm (67.72 in)
Depth	600 mm (23.62 in)
Net weight	150 kg (331 lb)

Selection and ordering data

Description	Article No.
SINUMERIK 840D sl training rack	**6ZB2410-0BM00**

© Siemens 2022

Overview

A high-quality programmable control or drive system can only be used to maximum effect if the user is aware of the performance of the CNC machine tool control and the machine tool drives as a result of intensive training and good technical documentation.

This is becoming more important due to the shorter innovation cycles of modern automation products and the convergence of electronics and mechanical engineering.

Comprehensive documentation is available for SINUMERIK CNCs and the SINAMICS S120 drive system. This documentation includes Operating Manuals, Programming Manuals and Configuration Manuals up to Commissioning Manuals.

The documents are available in hardcopy form or as a PDF file for downloading from the internet.

More information is available on the internet at:

www.siemens.com/sinumerikdocumentation

https://support.industry.siemens.com/cs/de/en/view/108464614

User license for SINUMERIK documentation Provision of documentation for further processing Valid for use on a control Supply of a license	License conditions see: www.siemens.com/docu-licence
Technical documentation on SINUMERIK 840D sl Version 4.95	https://support.industry.siemens.com/cs/ww/en/view/109798448
Documentation SINAMICS S120	https://support.industry.siemens.com/cs/ww/en/ps/13229/man
Documentation Motion Control Encoder measuring systems	https://support.industry.siemens.com/cs/ww/en/ps/13204/man Additional search term: Motion Control Encoder

Individual adaptation of information

Whether for turning, milling, grinding or nibbling - machine manufacturers and machine operators can assemble their individual operating instructions on the internet for specific topics such as programming, commissioning, etc.

Machine manufacturers and end customers are not only able to assemble their own customized technical documents for a specific product or system on the internet, they can also generate complete libraries with individually configured contents. The content that matches your topic can be found from the full range of documentation stored under Service & Support using the operator interface and assembled using drag & drop into application-based libraries, generated and even combined with your own documentation. User-generated collections can be saved in the commonly used RTF, PDF or XML formats.

More information is available on the internet at:

www.siemens.com/mdm

© Siemens 2022

Drive Technology Configurator

Overview

The Drive Technology Configurator (DT Configurator) helps you to configure the optimum drive technology products for your application – starting with gear units, motors, converters as well as the associated options and components and ending with controllers, software licenses and connection systems. Whether with little or detailed knowledge of products: preselected product groups, deliberate navigation through selection menus and direct product selection through entry of the article number support quick, efficient and convenient configuration.

In addition, comprehensive documentation comprising technical data sheets, 2D dimensional drawings/3D CAD models, operating instructions, certificates, etc. can be selected in the DT Configurator. Immediate ordering is possible by simply transferring a parts list to the shopping cart of the Industry Mall.

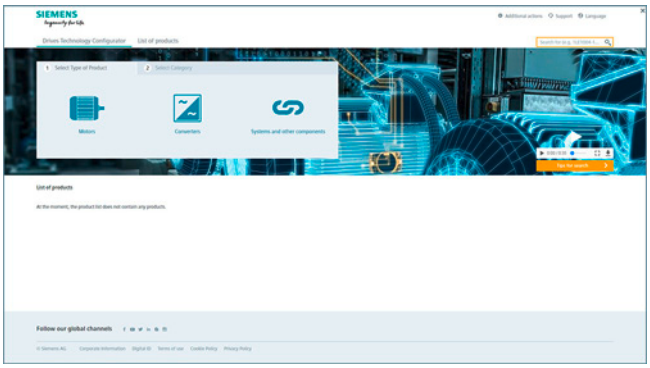

Drive Technology Configurator for efficient drive configuration with the following functions

- Quick and easy configuration of drive products and associated components – gear units, motors, converters, controllers, connection systems
- Configuration of drive systems for pumps, fans and compressor applications from 1 kW to 2.6 MW
- Retrievable documentation for configured products and components, such as
  - Data sheets in up to 9 languages in PDF or RTF format
  - 2D dimensional drawings/3D CAD models in various formats
  - Terminal box drawing and terminal connection diagram
  - Operating instructions
  - Certificates
  - Start-up calculation for SIMOTICS motors
  - EPLAN macros
- Support with retrofitting in conjunction with Spares On Web www.siemens.com/sow
- Ability to order products directly through the Siemens Industry Mall

Access to the Drive Technology Configurator

The Drive Technology Configurator can be called up without registration and without a login:
www.siemens.com/dt-configurator

© Siemens 2022

Product Partner SINUMERIK Systems

10/2 Introduction

10/3 Communication
10/3 TechSolve – Viz-Adapter MTConnect

10/4 Data Security
10/4 AUVESY GmbH – versiondog
10/5 Identify3D Inc. – Enforce
10/6 MDT Software – AutoSave Automation Change Management

10/7 Education
10/7 Christiani
10/7 • CNC crash course
10/8 • ShopTurn CNC crash course
10/9 • ShopMill CNC crash course
10/10 • CNC technology crash course

10/11 In-Process Measuring
10/11 Conoptica AS – CU2 Tool
10/12 MARPOSS GROUP
10/12 • ARTIS – CTM tool and process monitoring system
10/13 • ARTIS – Genior Modular tool and process monitoring system
10/14 • DITTEL Messtechnik GmbH – DS6000 balancing and process monitoring
10/15 • MARPOSS S.p.A. – Laser Tool Setter

10/16 Machine Accuracy
10/16 AfM Technology GmbH – Volumetric compensation
10/17 Hexagon AICON ETALON GmbH – LaserTRACER/LaserTRACER-MT
10/18 IBS Rotary Inspector
10/19 Renishaw plc – XM-60 Multi-axis calibrator

10/20 Machine Safety
10/20 HAINBUCH GmbH – TESTit
10/21 ModuleWorks GmbH – Real-time Collision Avoidance

10/22 Process Control
10/22 Balance Systems S.r.l. – VM25 system
10/23 Hofmann Mess- und Auswucht GmbH & Co. KG – AB 9000
10/24 MCU GmbH & Co. KG – Toolinspect II
10/25 Nordmann GmbH & Co. KG – SEM-Modul-e tool monitor
10/26 iSiOS GmbH – Robot calibration
10/27 Sandvik Coromant – PROSIN^{PLUS}
10/28 Sandvik Coromant – PROVIS (PROMOS 2)

10/29 Technology Application
10/29 Comara GmbH – iCut
10/30 Vosswinkel – SURE32 grinding system

© Siemens 2022

Overview

Under the name Product Partner SINUMERIK Systems, leading companies present acknowledged know-how in specific fields. Their products and solutions, that they develop, produce and sell themselves, are a useful complement to our comprehensive portfolio.

Our partner network also makes a crucial contribution toward you benefiting from maximally complete, high quality and efficient solutions, enabling you to sustainably improve your competitiveness.

This partnership allows intensive cooperation, and ensures a high degree of compatibility and reliability in productive use with SINUMERIK CNCs.

More information

The systems supplied by our partners are in many cases available for earlier SINUMERIK software versions and can be installed retrospectively. For further information, please contact the partner directly.

You can find additional information on the internet at:

www.siemens.com/product-partner

© Siemens 2022

Overview

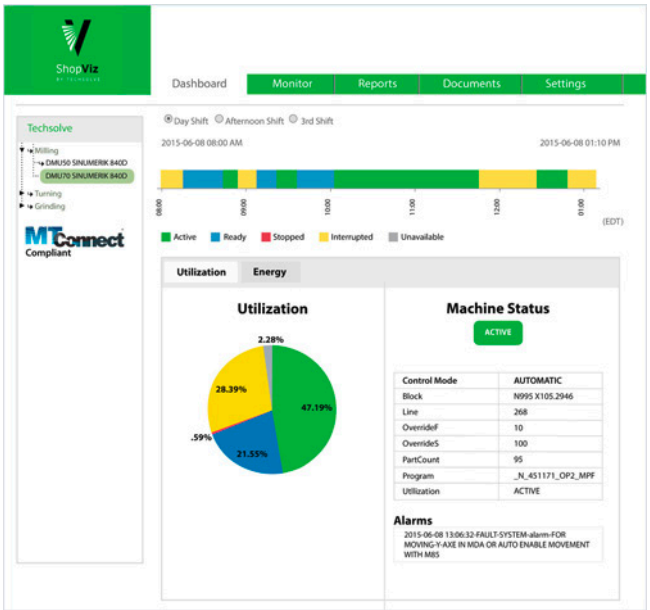

Viz-Adapter MTConnect

TechSolve's VizProducts adapter software offers MTConnect support for SINUMERIK 840D sl CNCs so that information can be recorded with the open source standard of MTConnect to improve the interoperability between devices and software applications. With the adapter software, combined with tool information, users can extract the control mode, the execution status, the program name, and block, line and variable information such as messages and alarms.

Customer-specific versions are available which can provide almost any SINUMERIK variable. Typical applications are machine monitoring, measuring the overall equipment effectiveness (OEE), alarm tracking, and monitoring of productivity.

Benefits

- Simple integration into NCU or PCU
- Starts and runs at system boot – invisible to the operator
- Operates with the agent software from MTConnect Institute (usually installed on the CNC). This ensures long-term compatibility and support.
- Customer-specific versions are available to provide almost any CNC variable or additional functions and logic.

Function

- Axes position: actual, load
- Spindle: speed, load, speed override (%), direction, mode (INDEX or SPINDLE)
- Feedrate: actual, controlled, override (%), rapid traverse override (%)
- Control: status, mode, execution mode, program, block, line, number of parts, path positon, message, program comment, single block, tool ID, tool name, emergency stop
- Status: system (displays the alarm messages of the machine)
- Sampling rate 1/s: higher sampling rates available as customer-specific modification

More information

TechSolve

6705 Steger Drive
CINCINNATI, OH 45237
USA

Tel.: +1 513 948 2113
Email: pieper@techsolve.org
Internet: www.techsolve.org

© Siemens 2022

AUVESY GmbH – versiondog

Overview

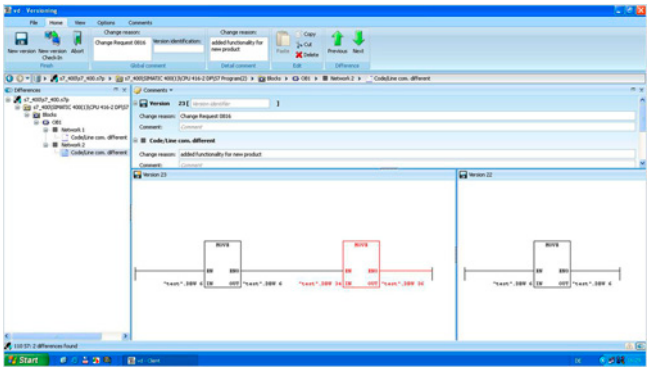

versiondog

versiondog is the enterprise solution developed by market leader AUVESY for an integrated software and data management system in the automated production industry. versiondog creates versions and automatic backups to save and manage your planning data. Thanks to its vendor neutrality, the system provides the most comprehensive depth of integration and the largest range of supported devices and editors.

With the SINUMERIK 840D sl integration, versiondog is offering a Siemens-certified method for the automated generation of ARC archives. This system makes it especially easy to trace changes and to produce a reliable backup when needed for disaster recovery.

Benefits

- 100 % traceability – the change factors WHO, WHAT, WHERE and WHEN are stored automatically
- Automatic storage of data saves time and ensures availability of data
- Fast restoration of optimized project versions
- Shorter downtimes and prevention of outages and waste
- Detailed project handover for external companies
- Change history is documented in electronic form for audits and QM processes

Function

- Version checks and versioning of revised software releases are made easy by backing up software versions. versiondog offers support by providing a menu-assisted documentation process. This solution saves an immense amount of time and makes the daily working routine so much easier.
- versiondog provides configurable archiving functions for PLC, CNC and compensation data, compile cycles, HMI data, drive data and data from CompactFlash cards. The system also provides a tool for converting a PLC series commissioning file into a SIMATIC S7 project.
- versiondog supports simultaneous archiving of multiple control systems and allows control data from these systems to be archived while they are in operation. Monitoring of consistency conditions during archiving is available as an option. versiondog also offers a data backup strategy for 24-7 production processes.
- Any versions selected by the user can be compared with one another at the push of a button (SmartCompare) so that errors can be located or analyzed quickly. Furthermore, a detailed comparison of the SIMATIC S7 project with differences represented in graphic, tabulated or text form is available in versiondog. Changes to a new production data record are also presented clearly. It is then, for example, easy to trace directly all the modifications made by a colleague.
- Automatic backup jobs show each change made to the last valid version and make it easy to distinguish between desirable and undesirable modifications at a glance. This solution is extremely reliable by comparison with other systems which involve internal or even external modification of production-relevant data records.
- A history that includes all changes to a production plant can be called at any time so that the parameter records pertaining to a particular production cycle are easy to track. Detailed documentation of this change history can be generated at any time at the push of a button.
- The availability of all versions means that any project status can be restored quickly and conveniently after a system failure (disaster recovery).

More information

AUVESY GmbH
Sales

Fichtenstraße 38 B
76829 LANDAU IN DER PFALZ
GERMANY

Tel.: +49 6341 6810 440
Email: info@auvesy.de
Internet: www.auvesy.de

© Siemens 2022

Overview

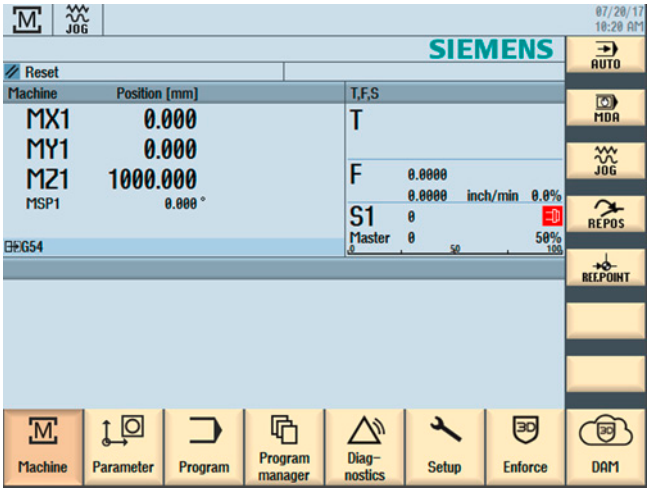

Enforce

Enforce offers users the ability to decode a technical data package that has previously been encrypted with Protect, in order to ensure adherence to the contractual and production-specific guidelines concerning digital licensing mechanisms that have been laid down by the developer/rights holder. The contractual guidelines can include who may perform the manufacturing and how many such units may be manufactured and for how long. The production guidelines can specify on which type of machine the workpiece is to be produced, which type of material is to be used, as well as machine-specific parameters of every kind (e.g. feedrate) or certifications for the material or the device with which the product is manufactured.

Benefits

- Protection of high-level IPs (details on the design and engineering data):
  Unauthorized groups or persons have no access to the data that is completely under the control of the developer/rights holder.
- Safeguarding the quality and consistency of production:
  The part may only be manufactured according to the production specification laid down by the developer/rights holder.
- Possibility of parts identification and traceability:
  Only the specified groups have production authorization, and all data from the production process is transferred to the developer/rights holder.

Function

- Ensure that digital values (technical data packages) are produced only as intended by the IP owner
- Managing the certification of machines, operators and material, and safeguarding the digital content that they require
- Restriction of operator options to protect against errors that could possibly compromise the quality of the finished workpiece
- Provision of a security mechanism for the production data that reports back to a Distributed Ledger, thereby supporting digital networking.

More information

Identify3D, Inc.

4 Joost Ave.
SAN FRANCISCO, CA 94941
USA

Tel.: +1 866 479 8045 Ext. 100
Email: info@identify3d.com
Internet: www.identify3d.com

© Siemens 2022

MDT Software – AutoSave Automation Change Management

Overview

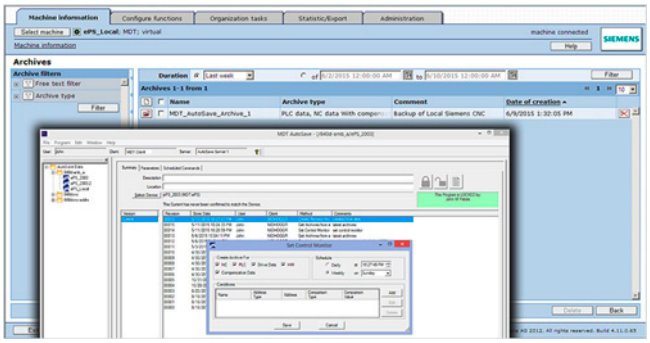

MDT – AutoSave Automation Change Management

With its wide range of functions, MDT AutoSave provides the most advanced change management for automation programs across the industry. AutoSave offers advanced version control, automatic backup and recovery, cybersecurity functions and program comparison functions for a comprehensive range of devices and editors, e.g. for the following Siemens products:

- SINUMERIK 840D sl CNC
- PCS 7
- STEP 7
- STEP 7 Professional
- STEP 7 TIA Portal
- STEP 7 Multi-project
- STEP 5*
- WinCC in the TIA Portal
- WinCC
- WinCC Flexible
- SICAM A8000 RTU
- Siemens Scalance Switch 200/400

Benefits

- Withdrawal of incorrect changes and restore program data within seconds
- Recover quickly if a program is lost (device failure, power failure, etc.)
- Automatically retrieve the most current copy of the device program
- Validate the program running in the processor matches the reference program you designate This allows changes to be detected that may have been unknown or unauthorized to protect people, processes and equipment
- Prepare, detect and recover from cybersecurity threats to networked devices
- View program activity through a web interface, on workstations, laptops and mobile devices

Function

- Centralized version control maintains accurate records of which software version is in use, when changes were made and who made the changes.
- A designated number of previous program copies is retained. When a change is made, a new current copy is saved by MDT AutoSave and the oldest copy is marked for later deletion.
- If necessary, the recovery of defective devices is possible by accessing the respective original versions or other versions.
- Communication parameters are stored on the server for quick retrieval of the correct program.
- The system can be set to periodically check for differences between the device and the current copy of a program stored in AutoSave. If deviations are detected, AutoSave sends a comparison report with a detailed list of difference to a pre-selected user.
- Only authorized users are able to access programs and make changes. Access is controlled by logins and passwords, which authenticate privileges according to the user's group (e.g., maintenance, engineering).
- AutoSave utilizes module extensions to the server that interact directly and uniquely with each 3rd party programming application. This provides a superior level of change control to other products on the market without the need to edit scripts with each new release of 3rd party software.
- Non-networked devices are supported by a check-out and check-in procedure enabling program copies to be downloaded from the central repository to the controls engineer's laptop for access remotely to assist in creating new programs in the field and comparing program versions. The non-network tools are then used to synchronize all changes back to the repository.

More information

MDT Software

3480 Preston Ridge Road
ALPHARETTA, GA 30005
USA

Tel.: +1 678 297 1000
Email: sales@mdt-software.com
Internet: www.mdt-software.com

© Siemens 2022

Overview

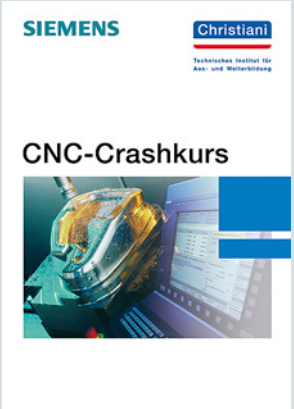

CNC crash course

The CNC crash course technical manual is intended for readers who want to thoroughly study the subject of CNC technology. The thematic composition of this technical manual is designed so that CNC beginners, in particular, are also well catered for, systematically leading trainees to a specified level of proficiency.

All the course examples in this technical manual are based on SINUMERIK Operate, software version 4.4 and higher.

Benefits

- Learning the fundamentals of CNC technology
- Programming in accordance with DIN 66025
- CNC milling
- CNC turning

Function

- 6 programming exercises on the subject of CNC milling, with solutions
- 4 programming exercises on the subject of CNC turning, with solutions
- Use of free SINUMERIK Operate demo software version 4.4
- Color design of pages

More information

Dr.-Ing. Paul Christiani GmbH & Co. KG

Hermann-Hesse-Weg 2
78464 KONSTANZ
GERMANY

Tel.: +49 7531 5801-110
Email: info@christiani-international.com
Internet: www.christiani-international.com

© Siemens 2022

Christiani – ShopTurn CNC crash course

Overview

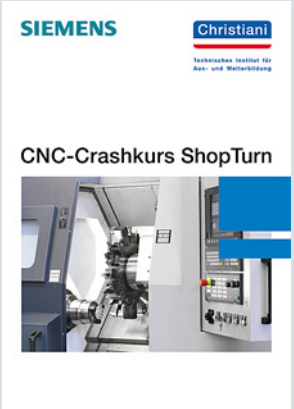

ShopTurn CNC crash course

The CNC Crash Course ShopTurn technical manual describes the configuration and handling of the SINUMERIK CNC user interface ShopTurn. In addition to the description of functions for programming, three workpieces are programmed by way of example. Basic knowledge of the CNC technology is required. This technical manual shall provide an entry into programming.

The SinuTrain version for SINUMERIK Operate software version 4.5 Basic refers to practical applications.

Benefits

- Structure of operator controls
- Creating tools
- Programming with ShopTurn

Function

- Three programming exercises on the subject of ShopTurn
- Use of the free SinuTrain for SINUMERIK Operate 4.5 Basic version
- Color design of pages

More information

Dr.-Ing. Paul Christiani GmbH & Co. KG

Hermann-Hesse-Weg 2
78464 KONSTANZ
GERMANY

Tel.: +49 7531 5801-110
Email: info@christiani-international.com
Internet: www.christiani-international.com

© Siemens 2022

Overview

ShopMill CNC crash course

The CNC Crash Course ShopMill technical manual describes the construction and operation of the SINUMERIK CNC ShopMill user interface. In addition to the description of functions for programming, two workpieces are programmed by way of example. Basic knowledge of the CNC technology is required. This technical manual shall provide an entry into programming.

The SinuTrain version for SINUMERIK Operate software version 4.5 Basic refers to practical applications.

Benefits

- Structure of operator controls
- Creating tools
- Programming with ShopMill

Function

- Two programming exercises on the subject of ShopMill
- Use of the free SINUMERIK Operate software version 4.5 Ed. 3 Basic
- Color design of pages

More information

Dr.-Ing. Paul Christiani GmbH & Co. KG

Hermann-Hesse-Weg 2
78464 KONSTANZ
GERMANY

Tel.: +49 7531 5801-110
Email: info@christiani-international.com
Internet: www.christiani-international.com

© Siemens 2022

Christiani – CNC technology telecourse

Overview

CNC technology telecourse

The CNC technology telecourse offers a comprehensive and practical introduction to the techniques of CNC programming. In order to ensure the greatest possible learning success, participants receive six sets of easily understandable, well structured tutorial notes, an extensive software package and professional supervision by an experienced course coach.

Benefits

- Advanced training without loss of earnings
- Maximum flexibility and free time allocation
- Efficient learning
- Quick attainment of learning targets
- Practice-oriented learning

Function

- Fundamentals of CNC technology
- Well-founded insights into process-related modes of operation and operation of the programming software
- CNC programming in accordance with DIN 66025
- Technology training for creating work plans and setup specifications
- Practical set up and equipping of CNC turning and milling machines
- Error checking of the programs created with realistic simulation software

More information

Dr.-Ing. Paul Christiani GmbH & Co. KG

Hermann-Hesse-Weg 2
78464 KONSTANZ
GERMANY

Tel.: +49 7531 5801-110
Email: info@christiani-international.com
Internet: www.christiani-international.com

© Siemens 2022

Overview

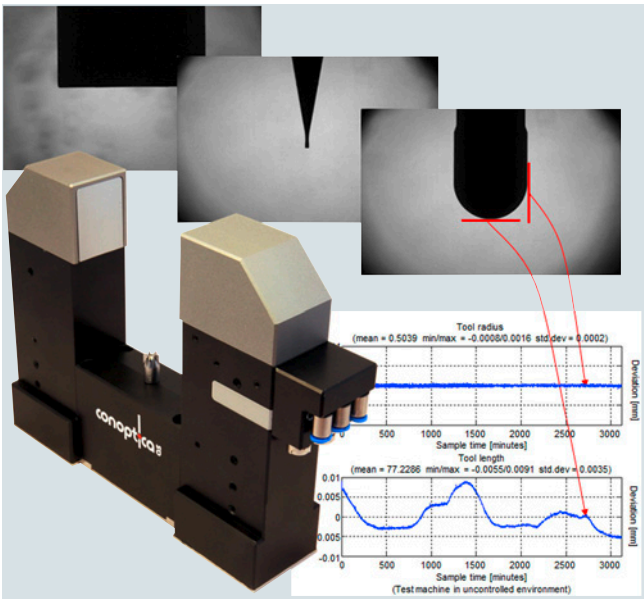

CU2 Tool - Intelligent camera-based sensor for non-contact tool measurement

The CU2 Tool sensor head is placed inside the machine tool and communicates directly with the CNC. The camera-based CU2 Tool ensures reliable operation. Proprietary digital cleaning techniques eliminate the effects of contamination (oil, chips, water, etc.) before positions and dimensions for milling, grinding or customer-specific tools are determined.

Benefits

- High-speed position and geometry measurements for milling and grinding tools
- Digital correction procedures ensure that results are reliable and precise
- Unsupervised 24-hour operation possible
- Camera technology permits the measuring of additional tool types and geometries
- Measurement of rounded forms improves the accuracy of 5-axis milling operations

Function

- Measurement of tool width, length and radius
- Performs tool wear analyses
- Measures out-of-roundness
- Measurements at spindle operating speed
- Automatic setup for common milling tools
- Capability of creating specific measurement arrangements for measuring customer-specific tools
- Uses reference models
  - Creation of a reference for a milling tool and its sister tools
  - The measurements use the reference to ensure the quality of the result
  - Shared use of references between CU2 tool sensors
- Choice between optimization of measuring accuracy or measurement speed
- Shows a live video of the rotating tool and freeze images after tool measurement
- Flexible mounting by use of bridges or separate configuration

More information

Conoptica AS

Hallsetveien 3
NO-7540 KLAEBU
NORWAY

Tel.: +47 72830150
Email: conoptica@conoptica.com
Internet: www.conoptica.com

© Siemens 2022

ARTIS – CTM tool and process monitoring system

Overview

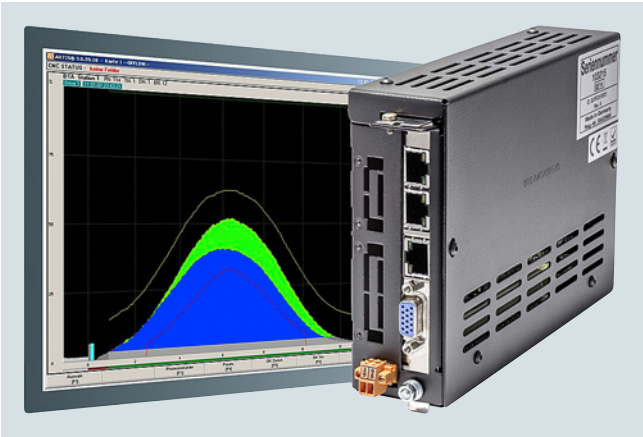

CTM tool and process monitoring system with flexible interface concept

The high-precision in-process monitoring provided by CTM protects machining processes. The CTM system detects tool breakage, tool wear and missing tools. The plug-in card with PCI and Ethernet connection for integration into the CNC control has various methods for data acquisition, corresponding measuring transducers and the visualization software.

Benefits

- Comprehensive machine, cutting process and tool protection
- Optimization of processes
- Reduced costs per item by elimination of rejects
- Flexible adaptation even to complex processes
- Process documentation for quality assurance

Function

- Data are captured either electronically or via external sensors (e.g. for force, torque, vibration)
- Comparison of the current process against a learned setpoint curve, visual representation of deviations
- Specification of values for breakage limits, display and documentation of alarms
- Visualization on the CNC operator panel or on an external screen
- Integrated in the machine tool control system
- Adaptive feedrate control (option)
- Various monitoring strategies, for example, specifically for long-term machining operations, hobbing processes or miniature tools through coolant flow monitoring
- Flexible interface concept with solutions for PROFIBUS, PROFINET, Ethernet and a starter variant without fieldbus connection
- Flexible configuration – setup and teach-in of all limits so that they are precisely tailored to the relevant application

More information

MARPOSS GmbH (ARTIS)

Mercedes Strasse 10
71384 WEINSTADT
GERMANY

Tel.: +49 7151 2054-0
Email: marposs4partner@marposs.com
Internet: www.marposs.com

© Siemens 2022

Overview

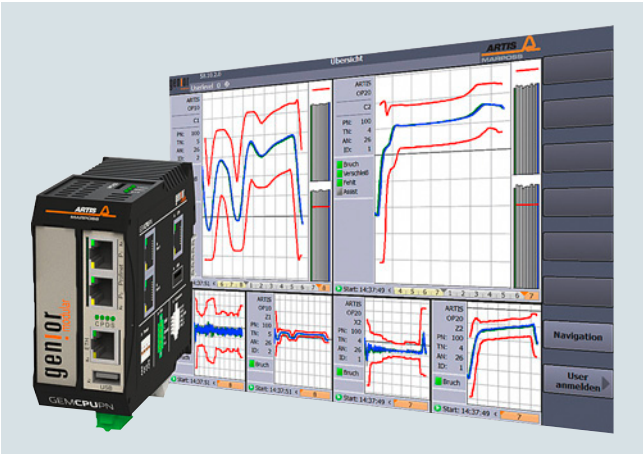

Genior Modular – fully automatic tool and process monitoring system

Genior Modular is a fully automatic machine and process monitoring system for machining processes and is predominantly deployed in medium and large-scale production runs. The Genior Modular system detects tool breakage, tool wear and missing tools. Inmost cases, the alarm limits are set and adjusted automatically. They can, however, also be adjusted manually in case of need. The Genior Modular system comprises evaluation electronic circuitry and offers various methods of data capture, appropriate measuring transducers and visualization software.

Benefits

- Comprehensive machine, cutting process and tool protection
- The Multiview visualization (up to 16 processes simultaneously) provides the possibility to optimize the processes
- Reduced costs per item by elimination of rejects
- Automatic monitoring with only few operator interventions
- Easy to install, can be scaled modularly

Function

- Data collection/acquisition in digital form or via external sensors, e.g. for force, torque, vibration
- Breakage limits are set automatically and refined automatically within 10 processes
- Manual adaptations possible in Expert Mode
- Modern visualization of current machining operations and stored machining steps
- Visualization on the CNC operator panel or on an external screen
- Adaptive feedrate control (option)
- Trend reports, data export, machine status, collision detection and network integration for visualization

More information

MARPOSS GmbH (ARTIS)

Mercedes Strasse 10
71384 WEINSTADT
GERMANY

Tel.: +49 7151 2054-0
Email: marposs4partner@marposs.com
Internet: www.marposs.com

© Siemens 2022

DITTEL Messtechnik GmbH – DS6000 balancing and process monitoring

Overview

Modular system for balancing and process monitoring

The DS6000 has a modular and expandable design and can be combined to suit the requirements of any project. This innovative concept is highly flexible in terms of its ability to meet customer requirements, provides the user with an increased range of features and is very easy to operate.

The DSCC software (DITTEL System Control Center) was developed for Windows-based automation systems. Operators have a comprehensive range of functions at their disposal, including the display of balancing, AE and measurement control signals on the operator panel and the transfer of PC and device settings to other machines via RS232C, Ethernet or USB interfaces as XML files. This enables time-saving series commissioning as well as problem-free resetting to factory defaults.

The systems are also able to be used independently of a controller with the DITTEL RC6000 or PC6000 remote controls. The intelligent visualization of information supplied by the monitoring systems supports operators in optimally utilizing the manufacturing potential of a plant, and, as a result, allow them to achieve significant overall reductions in process costs.

Benefits

- Wide range of modular balancing and process monitoring systems with visualization directly on the operator panel
- All-in-one-solution with in-process measurement, balancing and AE-monitoring
- Convenient systems with contactless signal and power transmission, wear and maintenance-free
- Customized balancing heads are adapted to spindle installation space and required capacities - as well as high speeds
- Large selection of AE sensors for use on grinding and tool spindles as well as dresser/dressing spindles
- Collision detection, reduction of air grinding, process visualization and optimization

Function

- Simple and easy-to-use systems with operator panel display
- Flexible connection to the CNC possible via e.g. PROFIBUS or PROFINET and integration via ActiveX interface
- Software options for extended function analysis, e.g. envelope curve, spectrum
- Series commissioning and various storage options

More information

MARPOSS S.p.A.

Via Saliceto 13
40010 BENTIVOGLIO (BO)
ITALY

Tel.: +39 051 899244
Email: marposs4partner@marposs.com
Internet: www.marposs.com

© Siemens 2022

Overview

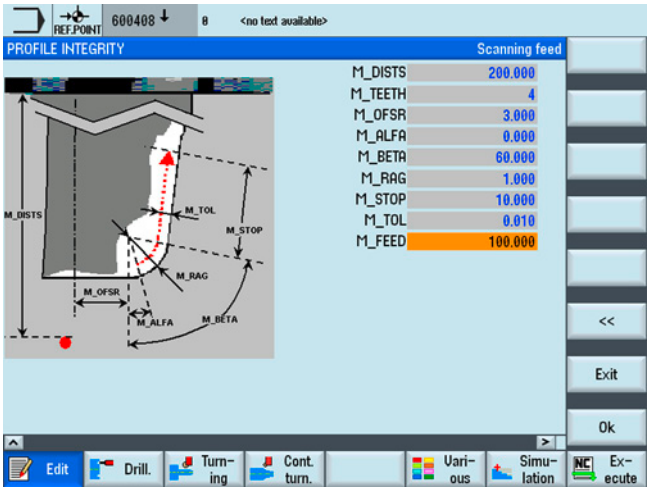

Laser Tool Setter – Automatic non-contact tool setting, part probing, machine and tool monitoring on machine tools

MARPOSS provides measuring cycles for part probing and tool setting which work in synergy with MARPOSS Probing Systems. The specific user interface makes programming easy.

All the necessary measurements can be performed on the part and on the tool for rapid setup of the machine. High-speed monitoring of the part, before and after the machining cycle as well as continuous monitoring of the machining conditions, can be performed by MARPOSS Probing and Monitoring Systems.

Benefits

- Fast, automatic and precise workpiece setup
- Tool presetting in machine condition to compensate axes thermal drift
- Tool and process verification to keep high production quality
- Part inspection on machine to avoid repositioning

Function

Tool measurements with Mida laser:

- Length and diameter of the tool
- Axial breakage
- Cutters integrity
- Cutters radius
- Compensation of the thermal drift of the machine axes

Part measurements with Mida spindle probes:

- Part positioning
- Measuring of drilled holes, pins, pockets and shoulders
- Single surface measurement
- Measuring the internal and external cross-arm

Machine and tool monitoring with MMS:

- Performance (tool breakage and wear)
- Force (cutting force optimization)
- Vibrations (machine condition and tool unbalancing)
- Temperature (overheating of bearings)
- Displacement (spindle growth)

More information

MARPOSS S.p.A.

Via Saliceto 13
40010 BENTIVOGLIO (BO)
ITALY

Tel.: +39 051 899485
Email: marposs4partner@marposs.com
Internet: www.marposs.com

© Siemens 2022

AfM Technology GmbH – Volumetric compensation

Overview

Volumetric compensation of geometric guide deviations

AfM Technology GmbH is an international solution provider in the field of mobile measurement technology based in Germany. The focus of the company lies in the metrological detection and correction of geometric guide deviations within machine tools, coordinate measuring machines, robot systems and other multi-axis machine systems.

Determination of geometrically reproducible translational and rotational guide deviations of machine axes. Based on the determined deviations a correction field is created for SINUMERIK CNCs. The correction of all single deviations ensues depending on the machine position at the tool center point (TCP) at machine runtime.

Benefits

- Capture and visualize geometric deviations of machine axes
- Capture and visualize reproducibility of machine axes
- Creation of machine-specific correction fields for SINUMERIK CNCs
- Significant improvement of machine accuracy by volumetric correction at runtime
- Verification of the accuracy improvement achieved owing to the volumetric compensation

Function

Due to the manufacturing process, machine axes deviate from their ideal geometrical shape and are never exactly perpendicular to each other. The existing geometrical deviations lead to translational and rotational deviations which have the effect that the actual position deviates from the target position.

- AfM Technology GmbH acquires the existing, individual geometry deviations of all axes with special measuring methods.
- From the individual errors, AfM Technology GmbH can generate a machine-specific error map for the CNC and save it in the control.

By knowing the single geometry deviations from the error map, the SINUMERIK Run MyCC /VCS option is able to calculate the total error at the tool center point (TCP) during runtime at every individual position. As soon as this error has been calculated, the CNC can change the coordinates of the target position so that the calculated deviations are taken into account and the tool center point thus reaches the setpoint specified in the CNC program in the best possible way. Significant increases in the accuracy of the machine and machined products are the result.

More information

AfM Technology GmbH

Gartenstraße 133
73430 AALEN
GERMANY

Tel.: +49 7361 88 96 08-0
Email: info@afm-tec.de
Internet: www.afm-tec.com

© Siemens 2022

Overview

The ETALON solution – volumetric machine calibration with submicrometer accuracy

Using the ETALON system, the geometric variations of a machine can be measured quickly and very accurately. The traversing paths of the machine are automatically traced in space by the LaserTRACER and evaluated using a patented process. Extremely high accuracy is achieved as a result of distance measurements in space using a high-resolution interferometer. The procedure is also used to calibrate highly accurate coordinate measuring devices.

The interferometer has a resolution of 1 nm with a maximum measuring length of 20 m. The LaserTRACER-MT with a measuring radius of between 260 and 940 mm can be used as an alternative. The automatically generated compensation data can then be directly transferred to a SINUMERIK CNC. Using the SINUMERIK Run MyCC /VCS option, systematic deviations are compensated throughout the working area. This usually multiplies the spatial accuracy of the machine.

Benefits

- Extensive, highly-accurate analysis of the geometry of the machine in the shortest possible time
- Significant increase in accuracy of the machine due to total error compensation in combination with the SINUMERIK Run MyCC /VCS option
- Extremely high accuracy even after long periods of operation, collision or lowering of the foundation as a result of machine recalibration
- Use on machine tools with any traversing range and coordinate measuring instruments

Function

- Calibration of linear and rotary axes
- High-speed machine testing in accordance with ISO 230, implementation of the diagonal measurement according to ISO 230-6, and circularity test without manual alignment
- Calculation of compensation data with TRAC-CAL
- Verification of compensation data with TRAC-CHECK

More information

Hexagon AICON ETALON GmbH

Biberweg 30 C
38114 BRAUNSCHWEIG
GERMANY

Tel.: +49 531 58 000 58
Email: info.etalon@hexagon.com
Internet: www.etalonproducts.com

© Siemens 2022

IBS Rotary Inspector

Overview

IBS Precision Engineering – Rotary Inspector

The Rotary Inspector is an intelligent tool measuring the kinematic precision of 5-axis machine tools according to the ISO standard.

Using the latest technology, the machine geometry and the dynamic performance are measured in less than 1 min., including rotation point offsets or the rotary axis and out-of-squareness errors. The key performance data of the machines can be tracked at group, cell or plant level and also in real time.

The tool was developed for product managers and machine manufacturers who attach great value to having an optimum continuous overview of the performance and quality of their machines. It answers the question of how machines can maintain the high level of quality around the clock without any deviations in product geometry or surface accuracy.

A machine compensation module is also available as an option.

Benefits

The Rotary Inspector is aimed at the 4 most important limits of current technology:

- Dynamic measurement:
  Rotary Inspector measures the effective dynamic performance
- Speed:
  Measurement times below 1 min. support constant quality control
- Continuous monitoring:
  Data logging on all machines indicates the current status and the historical progress
- Automation:
  Support of automated reports and unmanned operation

Function

- Dynamic 5-axis measurement (ISO 10791-6)
- Measurement time < 1 min
- Q value:
  Geometric error
- P value:
  Surface and form errors
- Standard quality report
- Status and trend data:
  Machine, group, cell or plant level
- Compensation option

More information

IBS Precision Engineering BV
Head Office

Esp 201
5633 AD EINDHOVEN
NETHERLANDS

Tel.: +31 40 290 1270
Email: info@ibspe.com
Internet: www.ibspe.com

© Siemens 2022

Overview

Renishaw plc – XM-60 Multi-axis calibrator

XM-60 is a laser measurement system capable of measuring errors in all six degrees of freedom along a linear axis, simultaneously from a single set-up. It provides a powerful diagnostic tool to measure all geometric errors in the axis from a single capture.

For users of volumetric compensation, XM-60 provides a quick and accurate method of data capture. All measurements are made optically allowing use in any orientation.

Benefits

- **Quick** – Linear, pitch, yaw, roll, horizontal and vertical straightness measurement in the same time as a single measurement with conventional laser techniques.
- **Simple** – Easy set-up. Automatic sign detection and graphical alignment minimize human errors.
- **Reassuring** – Measuring all errors directly allows the user to see results while the test is in progress.
- **Capable** – Unique optical roll measurement system facilitates roll measurement in any orientation

Function

- Calibration of six degrees of freedom simultaneously along a linear axis
- Calibration of rotary axes using the Renishaw XR20-W rotary axis calibrator
- Volumetric compensation of machine tools
- Performance reports to international standards.

More information

Renishaw plc

NEW MILLS
Wotton-under-Edge
Gloucestershire
UNITED KINGDOM
GL12 8JR

Tel.: +44 1453 524901
Internet: www.renishaw.com

© Siemens 2022

HAINBUCH GmbH – TESTit

Overview

TESTit – Force measurements for multiple applications in manufacturing

Regular monitoring of the clamping and draw-in forces is essential for a safe, accurate and productive process. Today, no one can afford to produce with "theoretical clamping/draw-in forces". In addition, DIN EN 1550 requires that static clamping force measurements be carried out at regular intervals.

The TESTit gauge measures and logs the clamping force for O.D and I.D. clamping, the draw-in force of tool spindles [HSK, SK, Capto], the locking force of the quick-change system, as well as the draw-in force of zero-point clamping systems and the axial force directly on the draw tube.

Benefits

The clamping force must be very high for large, solid components and very low for delicate components. It is only by precise measurement that the ideal clamping force can be determined and then subsequently reproduced. Standards and regulations also stipulate regular evaluation of the maintenance condition of the clamping device based on clamping force measurements.

- Guarantees the perfect clamping force whatever the application
- Maintenance of the clamping devices only if required
- Rapid detection of changes in the process such as
  - Contamination on clamping device
  - Worn hydraulic unit
- Higher productivity thanks to consistent quality

Function

- Clamping force measurement for external and internal clamping
- Pull-in force measurement for various applications
- Two units, connected with plug&play:
  - IT mModule – only 1 × needed
  - TEST Module – for various measuring applications
- Suitable for rotating (at speed) applications
- Software for visualization and archiving of measured data

More information

HAINBUCH GmbH
SPANNENDE TECHNIK

Erdmannhäuser Straße 57
71672 MARBACH
GERMANY

Tel.: +49 7144 907-0
Email: info@hainbuch.de
Internet: www.hainbuch.com

© Siemens 2022

Overview

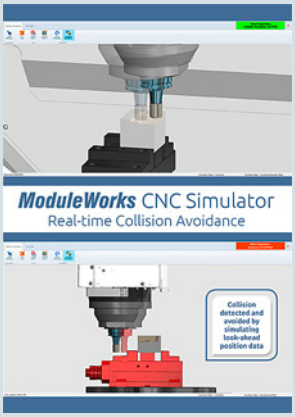

CNC-simulator – Real-time Collision Avoidance

This product simulates the machine kinematics, tools and material removal, including a live process display.

Collision detection and avoidance is available both in automatic and JOG modes and uses the motion data of the look-ahead function.

Benefits

- Avoidance of costly machine collisions
- Live simulation of the process data
- More safety for the machine operator

Function

- Fully integrated, realistic, virtual environment with the possibility of simulation of several workpieces, revolvers, gripping jaws, clamps, jigs and tools
- Collision detection using look-ahead function
- Realistic simulation by using the same motion data as the actual servo, without the need for pre-processing CNC data.

More information

ModuleWorks GmbH
Administration

Henricistrasse 50
52072 AACHEN
GERMANY

Tel.: +49 241 9900 04-0
Email: info@mduleworks.com
Internet: www.moduleworks.com

© Siemens 2022

Balance Systems S.r.l. – VM25 system

Overview

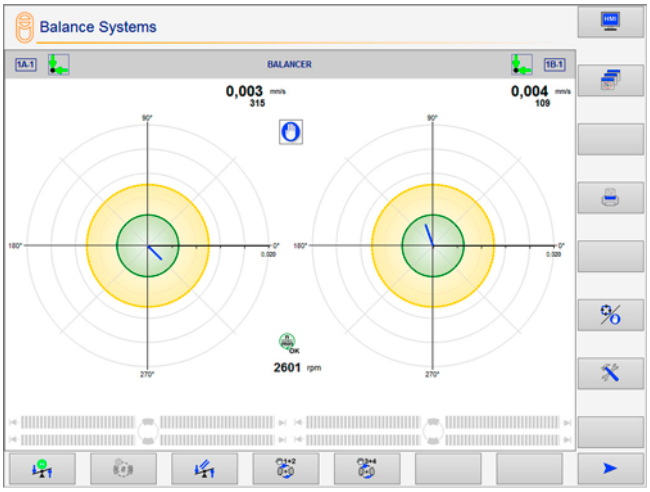

Versatile modular system for measuring and monitoring grinding machines – VM25 system

The VM25 system includes the hardware and software components required to ensure productivity, economy and quality of the grinding process – using either manual or automatic operations.

Benefits

- Complete:
  Permits comprehensive customization of the user interface, data display, setup and commands, with graphic libraries
- Flexible:
  Various application levels – from templates for immediate use to complex layouts tailored to the user's requirements
- Can be integrated:
  One Windows-based application integrates the control and process monitoring functions into the SINUMERIK HMI
- Intelligent:
  Comprehensive process data collection for effective control of the process
- Available:
  Open architecture for additional expansions

Function

The user interface VM25-HMI can be easily integrated by the user into a user application program, or activated as an independent task that can be used immediately.

Thanks to a complete programming interface based on an Active X library, the program can interact with the devices and the operator for managing the following functions:

- Balancing the grinding wheel in 1 or 2 planes, made possible by high-precision balancing heads without torque effect (patented), to achieve the best possible quality.
- Using acoustic, hydrophone and power sensors:
  - Determining the grinding wheel contact to optimize the machining and finishing cycles
  - Recording of the normal cutting characteristic patterns to monitor and signal process irregularities
- Absolute and comparative in-process measurement of the workpiece, with immediate correction feedback signal to the CNC/PLC for diameters, lengths and current positions, as well as for roundness deviations (patented), to avoid defective parts and to secure consistent production quality
- FFT analysis to monitor machine vibration and diagnose faulty components
- Data collection referred to measurements, internal and external events – with subsequent transfer of this data to other suitable media for process analysis
- Network connection to a remote PC, in the master or slave mode, via teleservice

More information

Balance Systems S.r.l.

Via Ruffilli 8/10
20060 PESSANO CON BORNAGO (MI)
ITALY

Tel.: +39 02 9504955
Email: info@balancesystems.it
Internet: www.balancesystems.com

© Siemens 2022

Overview

AB 9000 ring balancing system

The AB 9000 ring balancing system is based on a brilliantly simple concept. The vibrations generated on rotating systems due to imbalance are actively and quickly eliminated as the system rotates. Two balancing rotors are permanently mounted on the tool spindle via thin ring bearings. A fast, intelligent controller uses sensors to detect the imbalance in the spindle, calculates and adjusts the position of the two balancing rotors electromagnetically until they are ideally positioned to compensate the imbalance.

Benefits

- Automatic (active) balancing of all kinds of rotors
- Balancing during operation without machine shutdown
- Implementation of test imbalance for the purpose of system identification
- Generation of unbalance for acceptance tests

Function

- Automatic (active) balancing of rotors (e.g. grinding wheels, grinding spindles, turning chucks, fans) in one or two planes with imbalance monitoring
- Active balancing during operation without machine shutdown
- Ring-shaped balancing unit for efficient, space-saving integration into the rotor
- Very fast balancing even at high rotational speeds by electromagnetic actuator and adaptive balancing process
- Non-contact, wear-free transmission of actuator energy between stator and balancing ring
- Pre-balancing software for manual correction of basic unbalance - AB 9000 then only balances the new operational unbalances.
- Balancing unit can be neutralized, e.g. for pre-balancing.
- Indication of remaining balancing capacity
- PC operating software

More information

Hofmann Mess- und Auswuchttechnik GmbH & Co. KG

Werner-von-Siemens-Straße 21
64319 PFUNGSTADT
GERMANY

Tel.: +49 6157 949-0
Email: info@hofmann-global.com
Internet: www.hofmann-global.com

© Siemens 2022

MCU GmbH & Co. KG – Toolinspect II

Overview

Toolinspect II - Tool and process monitoring

The Toolinspect II module communicates with the SINUMERIK CNC via PROFINET or PROFIBUS DP. Visualization on the operator panel of the CNC is implemented with the module via a TCP/IP interface.

Benefits

- Easy operation using 3 function keys
- Tool damage detected immediately (real time system)
- Machine cycle time is not increased
- Automatic adaptation to any type of machining without intervention by the machine operator
- Rugged flash memory

Function

- Control-integrated tool, process and machine analysis
- 19 languages available online and selectable at any time
- Adaptive control for roughing operations to reduce machining times (option)
- Automatic system and data backup on 4 GB SD card
- Read out of torque and path actual data
- Monitoring of up to 6 channels (6 simultaneous machining operations)
- Monitoring after tool change
- Integrated process analysis and process reports in PDF/Excel files (option)
- Process analysis with evaluation capability for technologists and export function of the actual values and display of the data in Excel
- Evaluation of MDE production data and up to 250 faults (option)
- Link to SINUMERIK Integrate

More information

MCU GmbH & Co. KG
Sales Office

Oskar-Frech-Str. 15
73614 SCHORNDORF-WEILER
GERMANY

Tel: +49 8383 92233-20
Email: sales@mcu-gmbh.de
Internet: www.mcu-gmbh.de/en

© Siemens 2022

Overview

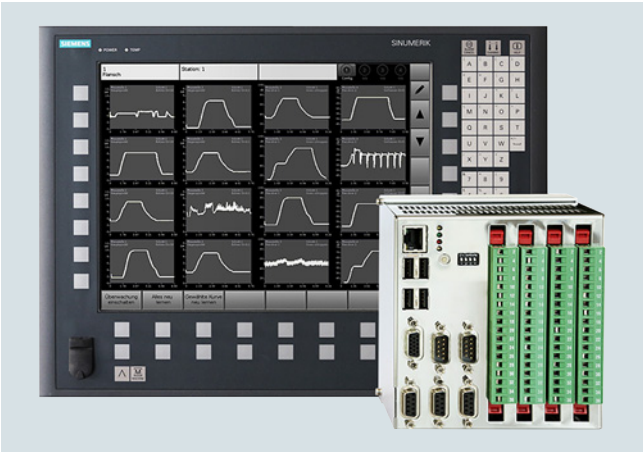

Tool monitor SEM-Modul-e – tool, process and machine monitoring

Monitoring of active power, acoustic emission, torque, current, force, hydraulic pressure, distance or laser light through various monitoring strategies (e.g. strategic and dynamic limits).

Benefits

- Control/monitoring through internal drive data via PROFIBUS
- Visualization and operation integrated in SINUMERIK NCUs
- Alternatively visualization and operation via external display
- Checking for break and wear, even for the smallest tools, using additional sensors if required
- Upgrade with acoustic sensors for monitoring of workpiece dimensions

Function

- Communication with up to 3 SINUMERIK NCUs via PROFIBUS and PROFINET
- Simultaneous analysis of internal drive data and analog sensor measurement values
- Display of up to 36 different measurement curves simultaneously
- Operator input integrated in the control or via touch screen
- Integrated user management

More information

Nordmann GmbH & Co. KG

Kalscheurener Straße 8
50354 HÜRTH
GERMANY

Tel.: +49 2233 96 88-0
Email: info@nordmann.eu
Internet: www.toolmonitoring.com

© Siemens 2022

iSiOS GmbH - Robot calibration

Overview

Robot calibration

Robot calibration is offered as a service and as a recalibration system. In both cases, the customer can choose between measuring with a laser tracker or the patented iSiOS LS measuring system.

Robot calibration products at a glance

Robot calibration as a service – an introduction to maximum accuracy

iSiOS, as a specialist, takes over the entire calibration process and ensures the professional execution, installation and application of the calibration. The result is extreme accuracy immediately after calibration, and then a significantly higher accuracy over a longer period of time. Recalibration allows maximum accuracy to be achieved again at any time.

The recalibration system – the solution for maintaining maximum accuracy

The iSiOS recalibration systems are designed to achieve and maintain maximum precision levels, since they are affected by collisions and mechanical processes over time. The systems are integrated in the robot cell. After setting up by iSiOS, users can carry out the calibration themselves with the software integrated into the SINUMERIK. Particularly the iSiOS L(aser)S(sensor) system, with stationary installation of the hardware in robot cells along the production line (inline system), enables fast and uncomplicated recalibration by the customer, thus minimizing machine downtimes. Rapid monitoring of production accuracy as well as fast restoration of zero positions complete the benefits of this system. The LS measuring system also has an attractive price-performance ratio.

The following option applies to all calibration products:
The work cell, including its fixtures, can also be calibrated or measured. In particular, additional axes, such as linear rails, can also be calibrated, which drastically increases the work area, as well as spindles for milling or drilling and tables with none, one or more axes. The additional work cell calibration maximizes the absolute accuracy of the overall system.

Typical fields of application can be found in aerospace, the automotive industry, medical engineering, flexible measuring systems, 3D printing, automated/advanced fiber placement (AFP) and non-destructive testing (NDT).

Benefits

Robot calibration as a service:

- Compensation by means of software integrated in SINUMERIK
- Best possible absolute accuracy depending on the robot type
- Accuracy check during execution
- Low initial costs, payment per calibration

Recalibration system:

- Compensation using software integrated in SINUMERIK
- Best possible absolute accuracy depending on the robot type
- System for maintaining robot accuracy
- System firmly integrated in the robot cell (inline)
- Accuracy check
- Customer recalibrations as required
- Optional: Fastest possible restoration of zero positions
- Minimal machine downtimes due to rapid recalibration

Function

iSiOS GmbH increases the absolute accuracy of robots by measuring, analyzing and compensating the systematic deviations.

- All systematic deviations are determined with a laser tracker or the LS measuring system
- The systematic deviations can be compensated on the basis of measurements calculated using specialized algorithms.

This significantly increases the absolute accuracy of robots and robot systems.

More information

iSiOS GmbH

Bessemerstr. 51
12103 BERLIN
GERMANY

Tel.: +49 30 6098640-10
Email: info@isios.de
Internet: www.isios.de

© Siemens 2022

Overview

PROSIN^{PLUS} – tool breakage and tool wear monitoring

The low-cost PROSIN^{PLUS} software permits direct access to the current values of the digital drives of the machine tool. If a tool breaks, the current of the associated drive changes; this value is increased in the case of a blunt tool. With PROSIN^{PLUS}, additional sensors and even complete monitoring units can be omitted.

A particular highlight of PROSIN^{PLUS} is the reliable detection of wear on rough-machining tools. This assumes mass production in which the batch size is significantly larger than the number of working tools.

PROSIN^{PLUS} is patented according to EP 1 276 027 and its derivations.

Benefits

- Break detection for drills, from approx. 2 mm (0.08 in) (depending on rated spindle power)
- Protects machine, tool holder and tool from overload
- Reduces secondary damage resulting from tool breakage, tool wear, incorrect CNC parameter entries, incorrect clamping of the workpieces, etc.
- Suitable for mass production as well as small batch sizes

Function

- Operator control using SINUMERIK operator panels
- No additional hardware required
- Only one operator side and extremely easy to operate
- Very easy to retrofit
- Up to 120 different cuts of a CNC program can be monitored with 3 thresholds for missing tool, tool in contact with workpiece, tool wear, and tool overload

More information

AB Sandvik Coromant

SE-81181 SANDVIKEN
SWEDEN

Email: info.coromant@sandvik.com
Internet: www.sandvik.coromant.com/processcontrol

© Siemens 2022

Sandvik Coromant – PROVIS (PROMOS 2) – Tool and process monitoring system

Overview

PROVIS – PROMOS 2 modular tool and process monitoring system with PROVIS software

The PROMOS 2 modular process monitoring system provides fast collision detection and reliable tool monitoring for all cutting processes.

Benefits

- Avoidance of most tool breakage incidents by prompt, automatic tool replacement
- Tool or workpiece damage is minimized, consequential damage prevented
- Increase in productivity without increased use of personnel
- Increase in quality through process optimization
- Reduction of machining times and improvement of part quality

Function

- Detection of tool breakage
- Detection of tool wear
- Detection of idle passes
- Detection of tool contact
- Functions for the visualization and, therefore, diagnosis and optimization of the machining operations
- Option: further monitoring functions, higher number of tools that can be monitored

More information

AB Sandvik Coromant

SE-81181 SANDVIKEN
SWEDEN

Email: info.coromant@sandvik.com
Internet: www.sandvik.coromant.com/processcontrol

© Siemens 2022

Overview

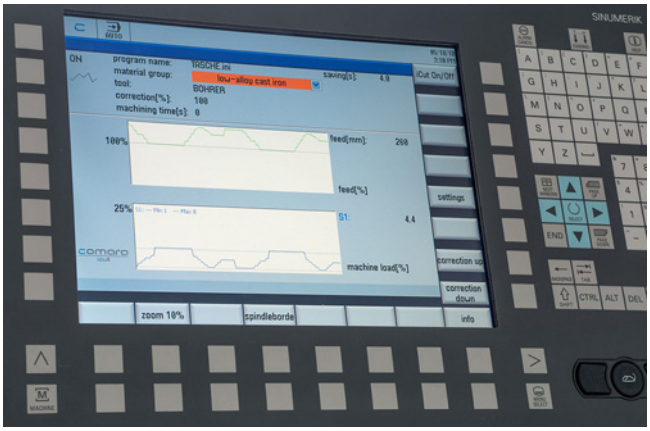

iCut – automatic feedrate adjustment according to cutting conditions

The intelligent software iCut can do a lot more than just monitor the cutting process. It also measures the spindle power and automatically adjusts the feedrate depending on the cutting conditions.

Variations in machining allowance or cutter contact angle, different depths of cut, increased hardness or tool wear – all these are taken into account to set the fastest feedrate possible and the slowest feedrate necessary. The ideal feedrate in any situation. With an unparalleled response time.

Benefits

- Up to 10 percent saving
- Higher process safety
- Overload protection

Function

Automatic feedrate adjustment according to cutting conditions

More information

Comara GmbH

Industriestrasse 21
78112 ST. GEORGEN/SCHWARZWALD
GERMANY

Tel.: +49 7724 9158-0
Email: info@comara.de
Internet: www.comara.de/en

© Siemens 2022

Vosswinkel – SURE32 grinding system

Overview

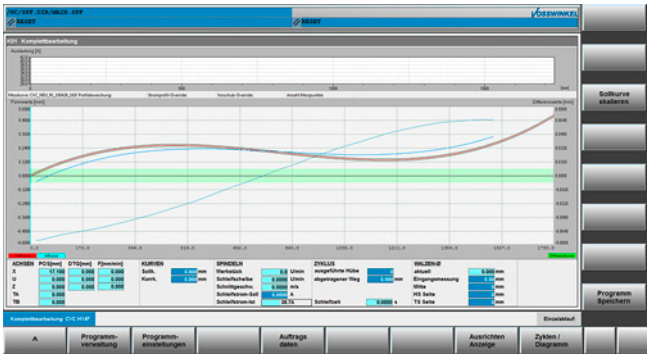

Vosswinkel – SURE32 grinding system

SURE32 is a highly efficient control system for roll grinding machines, which has been developed by Vosswinkel on the basis of long-term experience acquired in the machine tool sector.

SURE32 is a complete machine control concept for roll grinding machines, based on the SINAMICS drives and SINUMERIK controls from Siemens. It allows highly precise grinding, measuring and correction grinding operations in the steel, paper, foil and aluminum industries. The system can be integrated in existing roll shop management systems.

Benefits

- The system can be used both on new machines and on old machines (retrofit) from all grinding machine manufacturers
- The CNC hardware basis is always adapted to the state-of-the-art technology
- Intuitive-to-operate control system – no CNC programming knowledge of any kind is necessary
- Reproducible grinding quality thanks to user-friendly grinding recipe management
- Global Siemens and Vosswinkel Service – also via remote maintenance

Function

- Grinding of arbitrary, highly precise profiles
- Grinding of CVC roller pairs
- Automatic correction of the roller position
- Automatic roller measurement including determination of the geometric characteristics
- Correction grinding until the required tolerance range is reached
- Fully automatic machining according to the possibilities provided by the machinery
- Connection to an existing roller management system
- Integration of roller inspection systems
- Integration of automatic grindstone balancing systems and mechanical vibration systems

More information

Vosswinkel Steuerungstechnik GmbH

Stennert 12
45549 SPROCHHÖVEL
GERMANY

Tel.: +49 2339 91152-0
Email: mail@vosswinkel-gmbh.de
Internet: www.vosswinkel-gmbh.de

© Siemens 2022

11/2 **Certificates of suitability**

11/4 **Partners**

11/5 **Notes on software**
11/5 Software licenses
11/7 Setup texts and software update services

11/8 **Conversion tables**

11/10 **Metal surcharges**

11/13 **Conditions of sale and delivery**
Export regulations

© Siemens 2022

Overview

Many of the products in this Catalog fulfill requirements, e.g. for UL, CSA or FM and are labeled with the corresponding approval designation.

All of the certificates of suitability, approvals, certificates, declarations of conformity, test certificates, e.g. CE, UL, Safety Integrated etc. have been performed with the associated system components as they are described in the Catalogs and Configuration Manuals.

The certificates are only valid if the products are used with the described system components, are installed according to the Installation Guidelines and used for their intended purpose.

In other cases, the vendor of these products is responsible for arranging for the issue of new certificates.

Test code	Tested by	Device series/ Component	Test standard	Product category/ File-No.
UL: Underwriters Laboratories ***Independent public testing body in North America***				
	UL according to UL standard	SINUMERIK	Standard UL 508, CSA C22.2 No. 142	NRAQ/7.E164110 NRAQ/7.E217227
		SIMOTION	Standard UL 508, CSA C22.2 No. 142	NRAQ/7.E164110
	UL according to CSA standard UL according to UL and CSA standards	SINAMICS	Standard UL 508, 508C, 61800-5-1 CSA C22.2 No. 142, 274	NRAQ/7.E164110, NMMS/2/7/8.E192450, NMMS/2/7/8.E203250, NMMS/7.E214113, NMMS/7.E253831 NMMS/2/7/8.E121068 NMMS/7.E355661 NMMS/7.E323473
	UL according to UL standard	SIMODRIVE	Standard UL 508C, CSA C22.2 No. 274	NMMS/2/7/8.E192450 NMMS/7.E214113
	UL according to CSA standard UL according to UL and CSA standards	SIMOTICS	Standard UL 1004-1, 1004-6, 1004-8, CSA C22.2 No. 100	PRGY2/8.E227215 PRHZ2/8.E93429 PRHJ2/8.E342747 PRGY2/8.E253922 PRHZ2/8.E342746
		Line/motor reactors	Standard UL 508, 506, 5085-1, 5085-2, 1561, CSA C22.2 No. 14, 47, 66.1-06, 66.2-06	XQNX2/8.E257859 NMTR2/8.E219022 NMMS2/8.E333628 XPTQ2/8.E257852 XPTQ2/8.E103521 NMMS2/8.E224872 XPTQ2/8.E354316 XPTQ2/8.E198309 XQNX2/8.E475972
		Line filters, dv/dt filters, sine-wave filters	UL 1283, CSA C22.2 No. 8	FOKY2/8.E70122
		Resistors	UL 508, 508C, CSA C22.2 No. 14, 274	NMTR2/8.E224314 NMMS2/8.E192450 NMTR2/8.E221095 NMTR2/8.E226619
TUV: TUV Rheinland of North America Inc. ***Independent public testing body in North America, Nationally Recognized Testing Laboratory (NRTL)*** ***TÜV: TÜV SÜD Product Service*** ***Independent public testing body in Germany, Nationally Recognized Testing Laboratory (NRTL) for North America***				
	TUV according to UL and CSA standards	SINAMICS	NRTL listing according to standard UL 508C	U7V 12 06 20078 013 U7 11 04 20078 009 U7 11 04 20078 010 U7 11 04 20078 011
		SIMOTION	NRTL listing according to standard UL 508	U7V 13 03 20078 01
		SIMODRIVE	NRTL listing according to standard UL 508C, CSA C22.2. No. 14	CU 72090702
		Motion Control Encoder	NRTL listing according to UL 61010-1 CSA C22.2 No. 61010-1	U8V 10 06 20196 024

© Siemens 2022

Overview

Test code	Tested by	Device series/ Component	Test standard	Product category/ File-No.
CSA: Canadian Standards Association Independent public testing body in Canada				
	CSA according to CSA standard	SINUMERIK	Standard CSA C22.2 No. 142	2252-01 : LR 102527
FMRC: Factory Mutual Research Corporation Independent public testing body in North America				
	FM according to FM standard	SINUMERIK	Standard FMRC 3600, FMRC 3611, FMRC 3810, ANSI/ISA S82.02.1	–
EAC: Ivanovo-Certificate Independent public testing body in the Russian Federation				
	EAC in accordance with the EAC Directive	SINAMICS SINUMERIK SIMOTION	Standard IEC 61800-5-1/-2, IEC 61800-3	–
RCM: Australian Communications and Media Authority Independent public testing body in Australia				
	RCM according to EMC standard	SINAMICS SINUMERIK SIMOTION	Standard IEC AS 61800-3, EN 61800-3	–
KC: National Radio Research Agency Independent public testing body in South Korea				
	KC according to EMC standard	SINAMICS SINUMERIK SIMOTION	Standard KN 11	–
BIA Federal Institute for Occupational Safety				
–	Functional safety	SINAMICS SINUMERIK SIMOTION	Standard EN 61800-5-2	–
TÜV SÜD Rail				
–	Functional safety	SINAMICS SINUMERIK SIMOTION	Standard EN 61800-5-2	–

More information about certificates can be found online at:
https://support.industry.siemens.com/cs/ww/en/ps/cert

© Siemens 2022

Overview

Contacts at Siemens

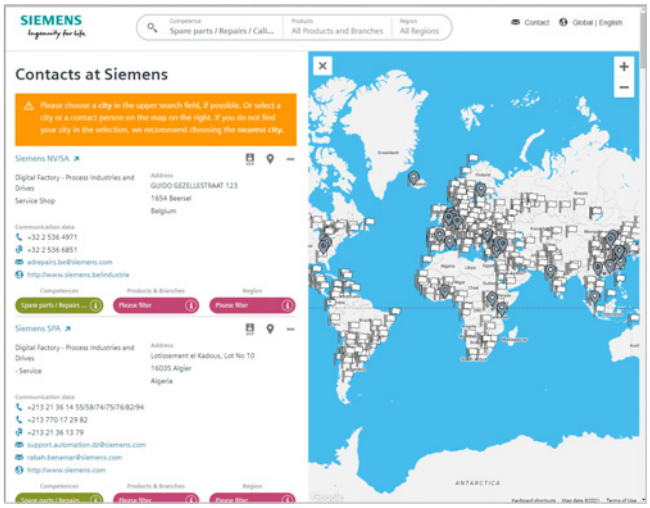

At your service locally, around the globe for consulting, sales, training, service, support, spare parts on the entire portfolio of Siemens.

Your contact can be found in our Personal Contacts Database at:
www.siemens.com/automation-contact

You start by selecting

- the required competence,
- products and branches,
- a country and a city

or by a

- location search or free text search.

© Siemens 2022

Overview

Software types

Software requiring a license is categorized into types.
The following software types have been defined:

- Engineering software
- Runtime software

Engineering software

This includes all software products for creating (engineering) user software, e.g. for configuring, programming, parameterizing, testing, commissioning or servicing.

Data generated with engineering software and executable programs can be duplicated for your own use or for use by third-parties free-of-charge.

Runtime software

This includes all software products required for plant/machine operation, e.g. operating system, basic system, system expansions, drivers, etc.

The duplication of the runtime software and executable programs created with the runtime software for your own use or for use by third-parties is subject to a charge.

You can find information about license fees according to use in the ordering data (e.g. in the catalog). Examples of categories of use include per CPU, per installation, per channel, per instance, per axis, per control loop, per variable, etc.

Information about extended rights of use for parameterization/configuration tools supplied as integral components of the scope of supply can be found in the readme file supplied with the relevant product(s).

License types

Siemens Industry Automation & Drive Technologies offers various types of software license:

- Floating license
- Single license
- Rental license
- Rental floating license
- Trial license
- Demo license
- Demo floating license

Floating license

The software may be installed for internal use on any number of devices by the licensee. Only the concurrent user is licensed. The concurrent user is the person using the program. Use begins when the software is started.
A license is required for each concurrent user.

Single license

Unlike the floating license, a single license permits only one installation of the software per license.

The type of use licensed is specified in the ordering data and in the Certificate of License (CoL). Types of use include for example per instance, per axis, per channel, etc.

One single license is required for each type of use defined.

Rental license

A rental license supports the "sporadic use" of engineering software. Once the license key has been installed, the software can be used for a specific period of time (the operating hours do not have to be consecutive).
One license is required for each installation of the software.

Rental floating license

The rental floating license corresponds to the rental license, except that a license is not required for each installation of the software. Rather, one license is required per object (for example, user or device).

Trial license

A trial license supports "short-term use" of the software in a non-productive context, e.g. for testing and evaluation purposes.
It can be transferred to another license.

Demo license

The demo license support the "sporadic use" of engineering software in a non-productive context, for example, use for testing and evaluation purposes. It can be transferred to another license. After the installation of the license key, the software can be operated for a specific period of time, whereby usage can be interrupted as often as required.

One license is required per installation of the software.

Demo floating license

The demo floating license corresponds to the demo license, except that a license is not required for each installation of the software. Rather, one license is required per object (for example, user or device).

Certificate of License (CoL)

The CoL is the licensee's proof that the use of the software has been licensed by Siemens. A CoL is required for every type of use and must be kept in a safe place.

Downgrading

The licensee is permitted to use the software or an earlier version/release of the software, provided that the licensee owns such a version/release and its use is technically feasible.

Delivery versions

Software is constantly being updated.
The following delivery versions

- PowerPack
- Upgrade

can be used to access updates.

Existing bug fixes are supplied with the ServicePack version.

PowerPack

PowerPacks can be used to upgrade to more powerful software. The licensee receives a new license agreement and CoL (Certificate of License) with the PowerPack. This CoL, together with the CoL for the original product, proves that the new software is licensed.
A separate PowerPack must be purchased for each original license of the software to be replaced.

Upgrade

An upgrade permits the use of a new version of the software on the condition that a license for a previous version of the product is already held.
The licensee receives a new license agreement and CoL with the upgrade. This CoL, together with the CoL for the previous product, proves that the new version is licensed.
A separate upgrade must be purchased for each original license of the software to be upgraded.

© Siemens 2022

Software licenses

Overview

ServicePack

ServicePacks are used to debug existing products.
ServicePacks may be duplicated for use as prescribed according to the number of existing original licenses.

License key

Siemens Industry Automation & Drive Technologies supplies software products with and without license keys.

The license key serves as an electronic license stamp and is also the "switch" for activating the software (floating license, rental license, etc.).

The complete installation of software products requiring license keys includes the program to be licensed (the software) and the license key (which represents the license).

Software Update Service (SUS)

As part of the SUS contract, all software updates for the respective product are made available to you free of charge for a period of one year from the invoice date. The contract will automatically be extended for one year if it is not canceled three months before it expires.

The possession of the current version of the respective software is a basic condition for entering into an SUS contract.

You can download explanations concerning license conditions from
https://mall.industry.siemens.com/legal/ww/en/terms_of_trade_en.pdf

© Siemens 2022

Overview

The "General License Conditions for Software Products for Automation and Drives" are applicable for supplies and deliveries of DI software products.

Legal notes during setup for new software products

All software products feature a uniform reference to the license conditions. The license conditions are enclosed either with the documentation or in the software pack. When software is downloaded from the Internet, the license contract is displayed before the ordering procedure and must be accepted by the user before downloading can continue.

Notice:
This software is protected by German and/or US copyright laws and the regulations of international agreements. Unauthorized reproduction or sale of this software or parts of it is a criminal offense. This will lead to criminal and civil prosecution, and may result in significant fines and/or claims for damages. Prior to installing and using the software, please read the applicable license conditions for this software. You will find these in the documentation or packaging.

If you have received this software on a CD-ROM that is marked Trial version, or accompanying software that is licensed for your use, the software is only permitted to be used for test and validation purposes in accordance with the accompanying conditions for the trial license. To this end, it is necessary for programs, software libraries, etc. are installed on your computer. We therefore urgently recommend that installation is performed on a single-user computer or on a computer that is not used in the production process or for storing important data, since it cannot be completely excluded that existing files will be modified or overwritten. We accept no liability whatsoever for damage and/or data losses that result from this installation or the non-observance of this warning. Every other type of use of this software is only permitted if you are in possession of a valid license from Siemens is obtained.

If you are not in possession of a valid license that can be proven by presenting an appropriate Certificate of License/software product certificate, please abort installation immediately and contact a Siemens office without delay to avoid claims for damages.

Software update services

Order
To order the software update service, an article number must be specified. The software update service can be ordered when the software products are ordered or at a later date. Subsequent orders require that the ordering party is in possession at least of a single license.

Note:
It is recommended that the software update service is ordered as early as possible. If a new software version of a software product is released for delivery by Siemens, only those customers will receive it automatically who are entered in the appropriate delivery list at Siemens at this time. Previous software versions, or the current software version are not supplied when the software update service is ordered. The software update service requires that the software product is up-to-date at the time of completion of the contract for the software update service.

Delivery
When a software update service is ordered, you will be sent the contractual conditions of this service and the price is due for payment. At the same time, you will be included in a delivery list for the software product to be updated. If Siemens releases a new software version for the corresponding software product for general sale (function version or product version), it will be delivered automatically to the goods recipient specified in the delivery address within the contract period.

© Siemens 2022

Rotary inertia (to convert from A to B, multiply by entry in table)

A \ B	lb-in^2	lb-ft^2	lb-in-s^2	lb-ft-s^2 slug-ft^2	kg-cm^2	kg-cm-s^2	gm-cm^2	gm-cm-s^2	oz-in^2	oz-in-s^2
lb-in^2	1	6.94×10^{-3}	2.59×10^{-3}	2.15×10^{-4}	2.926	2.98×10^{-3}	2.92×10^{3}	2.984	16	4.14×10^{-2}
lb-ft^2	144	1	0.3729	3.10×10^{-2}	421.40	0.4297	4.21×10^{5}	429.71	2304	5.967
lb-in-s^2	386.08	2.681	1	8.33×10^{-2}	1.129×10^{3}	1.152	1.129×10^{6}	1.152×10^{3}	6.177×10^{3}	16
lb-ft-s^2 slug-ft^2	4.63×10^{3}	32.17	12	1	1.35×10^{4}	13.825	1.355×10^{7}	1.38×10^{4}	7.41×10^{4}	192
kg-cm^2	0.3417	2.37×10^{-3}	8.85×10^{-4}	7.37×10^{-5}	1	1.019×10^{-3}	1000	1.019	5.46	1.41×10^{-2}
kg-cm-s^2	335.1	2.327	0.8679	7.23×10^{-2}	980.66	1	9.8×10^{5}	1000	5.36×10^{3}	13.887
gm-cm^2	3.417×10^{-4}	2.37×10^{-6}	8.85×10^{-7}	7.37×10^{-8}	1×10^{-3}	1.01×10^{-6}	1	1.01×10^{-3}	5.46×10^{-3}	1.41×10^{-5}
gm-cm-s^2	0.335	2.32×10^{-3}	8.67×10^{-4}	7.23×10^{-5}	0.9806	1×10^{-3}	980.6	1	5.36	1.38×10^{-2}
oz-in^2	0.0625	4.34×10^{-4}	1.61×10^{-4}	1.34×10^{-5}	0.182	1.86×10^{-4}	182.9	0.186	1	2.59×10^{-3}
oz-in-s^2	24.13	0.1675	6.25×10^{-2}	5.20×10^{-3}	70.615	7.20×10^{-2}	7.09×10^{4}	72.0	386.08	1

Torque (to convert from A to B, multiply by entry in table)

A \ B	lb-in	lb-ft	oz-in	N-m	kg-cm	kg-m	gm-cm	dyne-cm
lb-in	1	8.333×10^{-2}	16	0.113	1.152	1.152×10^{-2}	1.152×10^{3}	1.129×10^{6}
lb-ft	12	1	192	1.355	13.825	0.138	1.382×10^{4}	1.355×10^{7}
oz-in	6.25×10^{-2}	5.208×10^{-3}	1	7.061×10^{-3}	7.200×10^{-2}	7.200×10^{-4}	72.007	7.061×10^{4}
N-m	8.850	0.737	141.612	1	10.197	0.102	1.019×10^{4}	1×10^{7}
kg-cm	0.8679	7.233×10^{-2}	13.877	9.806×10^{-2}	1	10^{-2}	1000	9.806×10^{5}
kg-m	86.796	7.233	1.388×10^{3}	9.806	100	1	1×10^{5}	9.806×10^{7}
gm-cm	8.679×10^{-4}	7.233×10^{-5}	1.388×10^{-2}	9.806×10^{-5}	1×10^{-3}	1×10^{-5}	1	980.665
dyne-cm	8.850×10^{-7}	7.375×10^{-8}	1.416×10^{-5}	10^{-7}	1.0197×10^{-6}	1.019×10^{-8}	1.019×10^{-3}	1

Length (to convert from A to B, multiply by entry in table)

A \ B	inches	feet	cm	yd	mm	m
inches	1	0.0833	2.54	0.028	25.4	0.0254
feet	12	1	30.48	0.333	304.8	0.3048
cm	0.3937	0.03281	1	1.09×10^{-2}	10	0.01
yd	36	3	91.44	1	914.4	0.914
mm	0.03937	0.00328	0.1	1.09×10^{-3}	1	0.001
m	39.37	3.281	100	1.09	1000	1

Power (to convert from A to B, multiply by entry in table)

A \ B	hp	Watts
hp (English)	1	745.7
(lb-in) (deg./s)	2.645×10^{-6}	1.972×10^{-3}
(lb-in) (rpm)	1.587×10^{-5}	1.183×10^{-2}
(lb-ft) (deg./s)	3.173×10^{-5}	2.366×10^{-2}
(lb-ft) (rpm)	1.904×10^{-4}	0.1420
Watts	1.341×10^{-3}	1

Force (to convert from A to B, multiply by entry in table)

A \ B	lb	oz	gm	dyne	N
lb	1	16	453.6	4.448×10^{5}	4.4482
oz	0.0625	1	28.35	2.780×10^{4}	0.27801
gm	2.205×10^{-3}	0.03527	1	1.02×10^{-3}	N.A.
dyne	2.248×10^{-6}	3.59×10^{-5}	980.7	1	0.00001
N	0.22481	3.5967	N.A.	100000	1

Mass (to convert from A to B, multiply by entry in table)

A \ B	lb	oz	gm	kg	slug
lb	1	16	453.6	0.4536	0.0311
oz	6.25×10^{-2}	1	28.35	0.02835	1.93×10^{-3}
gm	2.205×10^{-3}	3.527×10^{-2}	1	10^{-3}	6.852×10^{-5}
kg	2.205	35.27	10^{3}	1	6.852×10^{-2}
slug	32.17	514.8	1.459×10^{4}	14.59	1

Rotation (to convert from A to B, multiply by entry in table)

A \ B	rpm	rad/s	degrees/s
rpm	1	0.105	6.0
rad/s	9.55	1	57.30
degrees/s	0.167	1.745×10^{-2}	1

© Siemens 2022

Temperature Conversion

°F	°C	°C	°F
0	–17.8	–10	14
32	0	0	32
50	10	10	50
70	21.1	20	68
90	32.2	30	86
98.4	37	37	98.4
212	100	100	212
subtract 32 and multiply by $^5/_9$		multiply by $^9/_5$ and add 32	

Mechanism Efficiencies

Acme-screw with brass nut	~0.35–0.65
Acme-screw with plastic nut	~0.50–0.85
Ball-screw	~0.85–0.95
Chain and sprocket	~0.95–0.98
Preloaded ball-screw	~0.75–0.85
Spur or bevel-gears	~0.90
Timing belts	~0.96–0.98
Worm gears	~0.45–0.85
Helical gear (1 reduction)	~0.92

Friction Coefficients

Materials	μ
Steel on steel (greased)	~0.15
Plastic on steel	~0.15–0.25
Copper on steel	~0.30
Brass on steel	~0.35
Aluminum on steel	~0.45
Steel on steel	~0.58

Mechanism	μ
Ball bushings	<0.001
Linear bearings	<0.001
Dove-tail slides	~0.2++
Gibb ways	~0.5++

Material Densities

Material	lb-in^3	gm-cm^3
Aluminum	0.096	2.66
Brass	0.299	8.30
Bronze	0.295	8.17
Copper	0.322	8.91
Hard wood	0.029	0.80
Soft wood	0.018	0.48
Plastic	0.040	1.11
Glass	0.079–0.090	2.2–2.5
Titanium	0.163	4.51
Paper	0.025–0.043	0.7–1.2
Polyvinyl chloride	0.047–0.050	1.3–1.4
Rubber	0.033–0.036	0.92–0.99
Silicone rubber, without filler	0.043	1.2
Cast iron, gray	0.274	7.6
Steel	0.280	7.75

Wire Gauges[1)]

Cross-section mm^2	Standard Wire Gauge (SWG)	American Wire Gauge (AWG)
0.2	25	24
0.3	23	22
0.5	21	20
0.75	20	19
1.0	19	18
1.5	17	16
2.5	15	13
4	13	11
6	12	9
10	9	7
16	7	6
25	5	3
35	3	2
50	0	1/0
70	000	2/0
95	00000	3/0
120	0000000	4/0
150	–	6/0
185	–	7/0

[1)] The table shows approximate SWG/AWG sizes nearest to standard metric sizes; the cross-sections do not match exactly.

© Siemens 2022

Explanation of the raw material/metal surcharges[1)]

Surcharge calculation

To compensate for variations in the price of the raw materials silver, copper, aluminum, lead, gold, dysprosium[2)] and/or neodym[2)], surcharges are calculated on a daily basis using the so-called metal factor. These apply to products containing these raw materials and are calculated per raw material. These surcharges are added to the price of a product if the basic official price (BOP) of the raw material in question is exceeded.

Surcharges are calculated in accordance with the following criteria:

Basic official price (BOP) of the raw material

- BOP of the workday prior to receipt of the order or prior to release order (Daily Price) for:
  - Silver (processed) [3)]
  - Gold (processed) [3)]
  - Aluminum (temporary constant 360.31 EUR per 100 kg, due to loss of DEL-Notiz)
  - Lead (constant 199.50 EUR per 100 kg)
- BOP of two workdays prior to receipt of the order or prior to release order (Daily Price) per 100 kg for:
  - Copper (LME-notation/10, converted from USD to EUR using LME-FX-Rate [MTLE] +1.2%) + 1% [4)]
- If BOP is suspended, the last one is used.

Metal factor of the products

Certain products are displayed with a metal factor. The metal factor determines the official price (for those raw materials concerned) as of which the metal surcharges are applied and the calculation method used (weight or percentage method). An exact explanation is given below.

Structure of the metal factor

Metal factor consists of several digits; the first digit indicates whether the percentage method of calculation refers to the list price or a discounted price (customer net price) (L = list price / N = customer net price).

The remaining digits indicate the method of calculation used for the respective raw material. If no surcharge is added for a raw material, a "-" is used.

1st digit	List or customer net price using the percentage method
2nd digit	for silver (AG)
3rd digit	for copper (CU)
4th digit	for aluminum (AL)
5th digit	for lead (PB)
6th digit	for gold (AU)
7th digit	for dysprosium (Dy)[2)]
8th digit	for neodym (Nd)[2)]

Weight method

The weight method uses the BOP, the daily price and the raw material weight. In order to calculate the surcharge, the BOP must be subtracted from the daily price. The difference is then multiplied by the raw material weight.

The BOP can be found in the table below using the number (1 to 9) of the respective digit of the metal factor. The raw material weight can be found in the respective product descriptions.

Percentage method

Use of the percentage method is indicated by the letters A-Z at the respective digit of the metal factor.

The surcharge is increased - dependent on the deviation of the daily price compared with the BOP - using the percentage method in "steps" and consequently offers surcharges that remain constant within the framework of this "step range". A higher percentage rate is charged for each new step. The respective percentage level can be found in the table below.

Metal factor examples

L E A – – – – –

- Basis for % surcharge: List price
- Silver Basis 150 €, Step 50 €, 0.5 %
- Copper Basis 150 €, Step 50 €, 0.1 %
- No surcharge for aluminum
- No surcharge for lead
- No surcharge for gold
- No surcharge for dysprosium
- No surcharge for neodym

N – A 6 – – – –

- Basis for % surcharge: Customer net price
- No surcharge for silver
- Copper Basis 150 €, Step 50 €, 0.1 %
- Aluminum acc. to weight, basic offic. price 225 €
- No surcharge for lead
- No surcharge for gold
- No surcharge for dysprosium
- No surcharge for neodym

– – 3 – – – – –

- No basis necessary
- No surcharge for silver
- Copper acc. to weight, basic official price 150 €
- No surcharge for aluminum
- No surcharge for lead
- No surcharge for gold
- No surcharge for dysprosium
- No surcharge for neodym

1) Refer to the separate explanation on the next page regarding the raw materials dysprosium and neodym (= rare earths).
2) For a different method of calculation, refer to the separate explanation for these raw materials on the next page.
3) Source: Umicore, Hanau (www.metalsmanagement.umicore.com).
4) Source: The London Metal Exchange – an HKEX Company (https://www.lme.com/).
Siemens uses LME's data and trademarks within the scope of a license granted by LME, LME has no involvement and accepts no responsibility to any third party in connection with the use of data and trademarks, onward distribution of data and trademarks by third parties is not permitted.

© Siemens 2022

Explanation of the raw material/metal surcharges for dysprosium and neodym (rare earths)

Surcharge calculation

To compensate for variations in the price of the raw materials silver[1], copper[1], aluminum[1], lead[1], gold[1], dysprosium and/or neodym, surcharges are calculated on a daily basis using the so-called metal factor. This applies to products containing at least one of these raw materials. The surcharge for dysprosium and neodym is calculated as a supplement to the price of a product if the basic official price (BOP) of the raw material in question is exceeded.

The surcharge is calculated in accordance with the following criteria:

- Basic official price (BOP) of the raw material[2]
  Three-month basic average price (see below) in the period before the quarter in which the order was received or the release order took place (average official price) for
  - Dysprosium (Dy metal, 99 % min. FOB China; USD/kg)
  - Neodym (Nd metal, 99 % min. FOB China; USD/kg)
- Metal factor of the products
  Certain products are displayed with a metal factor. The metal factor indicates (for those raw materials concerned) the BOP as of which the surcharges for dysprosium and neodym are calculated using the weight method. An exact explanation of the metal factor is given below.

Three-month average price

The prices of rare earths vary according to the foreign currency, and there is no freely accessible stock exchange listing. This makes it more difficult for all parties involved to monitor changes in price. In order to avoid continuous adjustment of the surcharges, but to still ensure fair, transparent pricing, an average price is calculated over a three-month period using the average monthly foreign exchange rate from USD to EUR (source: European Central Bank). Since not all facts are immediately available at the start of each month, a one-month buffer is allowed before the new average price applies.

Examples of calculation of the average official price:

Period for calculation of the average price:	Period during which the order/release order is effected and the average price applies:
Sep 2012 - Nov 2012	Q1 in 2013 (Jan - Mar)
Dec 2012 - Feb 2013	Q2 in 2013 (Apr - Jun)
Mar 2013 - May 2013	Q3 in 2013 (Jul - Sep)
Jun 2013 - Aug 2013	Q4 in 2013 (Oct - Dec)

Structure of the metal factor

The metal factor consists of several digits; the first digit is not relevant to the calculation of dysprosium and neodym.

The remaining digits indicate the method of calculation used for the respective raw material. If no surcharge is added for a raw material, a "-" is used.

1st digit	List or customer net price using the percentage method
2nd digit	for silver (AG)[1]
3rd digit	for copper (CU)[1]
4th digit	for aluminum (AL)[1]
5th digit	for lead (PB)[1]
6th digit	for gold (AU)[1]
7th digit	for dysprosium (Dy)
8th digit	for neodym (Nd)

Weight method

The weight method uses the basic official price, the average price and the raw material weight. In order to calculate the surcharge, the BOP must be subtracted from the average price. The difference is then multiplied by the raw material weight.

The basic official price can be found in the table below using the number (1 to 9) of the respective digit of the metal factor. Your Sales contact can inform you of the raw material weight.

Metal factor examples

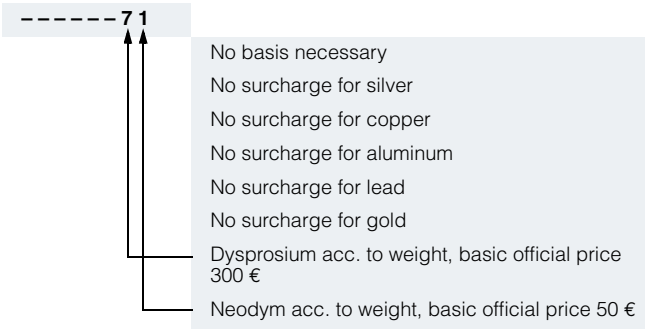

[1] For a different method of calculation, refer to the separate explanation for these raw materials on the previous page.
[2] Source: Asian Metal Ltd (www.asianmetal.com)

© Siemens 2022

Values of the metal factor

Percentage method	Basic official price in €	Step range in €	% surcharge 1st step	% surcharge 2nd step	% surcharge 3rd step	% surcharge 4th step	% surcharge per additional step
			Price in €	Price in €	Price in €	Price in €	
			150.01 - 200.00	200.01 - 250.00	250.01 - 300.00	300.01 - 350.00	
A	150	50	0.1	0.2	0.3	0.4	0.1
B	150	50	0.2	0.4	0.6	0.8	0.2
C	150	50	0.3	0.6	0.9	1.2	0.3
D	150	50	0.4	0.8	1.2	1.6	0.4
E	150	50	0.5	1.0	1.5	2.0	0.5
F	150	50	0.6	1.2	1.8	2.4	0.6
G	150	50	1.0	2.0	3.0	4.0	1.0
H	150	50	1.2	2.4	3.6	4.8	1.2
I	150	50	1.6	3.2	4.8	6.4	1.6
J	150	50	1.8	3.6	5.4	7.2	1.8
			175.01 - 225.00	225.01 - 275.00	275.01 - 325.00	325.01 - 375.00	
O	175	50	0.1	0.2	0.3	0.4	0.1
P	175	50	0.2	0.4	0.6	0.8	0.2
R	175	50	0.5	1.0	1.5	2.0	0.5
			225.01 - 275.00	275.01 - 325.00	325.01 - 375.00	375.01 - 425.00	
S	225	50	0.2	0.4	0.6	0.8	0.2
U	225	50	1.0	2.0	3.0	4.0	1.0
V	225	50	1.0	1.5	2.0	3.0	1.0
W	225	50	1.2	2.5	3.5	4.5	1.0
			150.01 - 175.00	175.01 - 200.00	200.01 - 225.00	225.01 - 250.00	
Y	150	25	0.3	0.6	0.9	1.2	0.3
			400.01 - 425.00	425.01 - 450.00	450.01 - 475.00	475.01 - 500.00	
Z	400	25	0.1	0.2	0.3	0.4	0.1
	Price basis (1st digit)						
L	Calculation based on the list price						
N	Calculation based on the customer net price (discounted list price)						
Weight method	**Basic official price in €**						
1	50	Calculation based on raw material weight					
2	100						
3	150						
4	175						
5	200						
6	225						
7	300						
8	400						
9	555						
Miscellaneous							
-	No metal surcharge						

© Siemens 2022

1. General Provisions

By using this catalog you can purchase products (hardware, software and services) described therein from Siemens Aktiengesellschaft subject to the following Terms and Conditions of Sale and Delivery (hereinafter referred to as "T&C"). Please note that the scope, the quality and the conditions for supplies and services, including software products, by any Siemens entity having a registered office outside Germany, shall be subject exclusively to the General Terms and Conditions of the respective Siemens entity. The following T&C apply exclusively for orders placed with Siemens Aktiengesellschaft, Germany.

1.1 For customers with a seat or registered office in European Union

For customers with a seat or registered office in European Union, the following terms and conditions apply subordinate to T&C:

- for products, which include specific terms and conditions in the description text, these specific terms and conditions shall apply and subordinate thereto,
- for stand-alone software products and software products forming a part of a product or project, the "General License Conditions for Software Products for Automation and Drives for Customers with a Seat or registered Office in Germany"[1)] and/or
- for consulting services the “Allgemeine Geschäftsbedingungen für Beratungsleistungen der Division DF – Deutschland” (available only in German) and/or
- for other services, the „Supplementary Terms and Conditions for Services (“BL”)[1)] and/or
- for other supplies the "General Conditions for the Supply of Products and Services of the Electrical and Electronics Industry"[1)].
  In case such supplies should contain Open Source Software, the conditions of which shall prevail over the "General Conditions for the Supply of Products and Services of the Electrical and Electronics Industry"[1)], a notice will be contained in the scope of delivery in which the applicable conditions for Open Source Software are specified. This shall apply mutatis mutandis for notices referring to other third party software components.

1.2 For customers with a seat or registered office outside European Union

For customers with a seat or registered office outside European Union, the following terms and conditions apply subordinate to T&C:

- for products, which include specific terms and conditions in the description text, these specific terms and conditions shall apply and subordinate thereto,
- for consulting services the "Standard Terms and Conditions for Consulting Services of the Division DF for Customers with a Seat or Registered Office Outside of Germany"[1)] and/or
- for other services the "International Terms & Conditions for Services"[1)] supplemented by "Software Licensing Conditions"[1)] and/or
- for other supplies of hard- and software the "International Terms & Conditions for Products"[1)] supplemented by "Software Licensing Conditions"[1)]

1.3 For customers with master or framework agreement

To the extent our supplies and/or services offered are covered by an existing master or framework agreement, the terms and conditions of that agreement shall apply instead of T&C.

2. Prices

The prices are in € (Euro) ex point of delivery, exclusive of packaging.

The sales tax (value added tax) is not included in the prices. It shall be charged separately at the respective rate according to the applicable statutory legal regulations.

Prices are subject to change without prior notice. We will charge the prices valid at the time of delivery.

To compensate for variations in the price of raw materials (e.g. silver, copper, aluminum, lead, gold, dysprosium and neodym), surcharges are calculated on a daily basis using the so-called metal factor for products containing these raw materials.
A surcharge for the respective raw material is calculated as a supplement to the price of a product if the basic official price of the raw material in question is exceeded.

The metal factor of a product indicates the basic official price (for those raw materials concerned) as of which the surcharges on the price of the product are applied, and with what method of calculation.

You will find a detailed explanation of the metal factor on the page headed "Metal surcharges".

To calculate the surcharge (except in the cases of dysprosium and neodym), the official price from the day prior to that on which the order was received or the release order was effected is used.

To calculate the surcharge applicable to dysprosium and neodym (“rare earths"), the corresponding three-month basic average price in the quarter prior to that in which the order was received or the release order was effected is used with a one-month buffer (details on the calculation can be found in the explanation of the metal factor).

3. Additional Terms and Conditions

The dimensions are in mm. In Germany, according to the German law on units in measuring technology, data in inches apply only to devices for export.

Illustrations are not binding.

Insofar as there are no remarks on the individual pages of this catalog – especially with regard to data, dimensions and weights given – these are subject to change without prior notice.

[1)] The text of the Terms and Conditions of Siemens AG can be downloaded at
https://mall.industry.siemens.com/legal/ww/en/terms_of_trade_en.pdf

© Siemens 2022

4. Export Regulations

We shall not be obligated to fulfill any agreement if such fulfillment is prevented by any impediments arising out of national or international foreign trade or customs requirements or any embargoes and/or other sanctions.

Export may be subject to license. We shall indicate in the delivery details whether licenses are required under German, European and US export lists.

Our products are controlled by the U.S. Government (when labeled with "ECCN" unequal "N") and authorized for export only to the country of ultimate destination for use by the ultimate consignee or end-user(s) herein identified. They may not be resold, transferred, or otherwise disposed of, to any other country or to any person other than the authorized ultimate consignee or end-user(s), either in their original form or after being incorporated into other items, without first obtaining approval from the U.S. Government or as otherwise authorized by U.S. law and regulations. Products labeled with "AL" unequal "N" are subject to European / national export authorization.

The export indications can be viewed in advance in the description of the respective goods on the Industry Mall, our online catalog system. Only the export labels "AL" and "ECCN" indicated on order confirmations, delivery notes and invoices are authoritative.

Products without label, with label "AL:N" / "ECCN:N", or label "AL:9X9999" / "ECCN: 9X9999" may require authorization from responsible authorities depending on the final end-use, or the destination.

If you transfer goods (hardware and/or software and/or technology as well as corresponding documentation, regardless of the mode of provision) delivered by us or works and services (including all kinds of technical support) performed by us to a third party worldwide, you shall comply with all applicable national and international (re-)export control regulations. In any event of such transfer of goods, works and services you shall comply with the (re-) export control regulations of the Federal Republic of Germany, of the European Union and of the United States of America.

Prior to any transfer of goods, works and services provided by us to a third party you shall in particular check and guarantee by appropriate measures that

- there will be no infringement of an embargo imposed by the European Union, by the United States of America and/ or by the United Nations by such transfer, by brokering of contracts concerning those goods, works and services or by provision of other economic resources in connection with those goods, works and services, also considering the limitations of domestic business and prohibitions of by-passing those embargos;
- such goods, works and services are not intended for use in connection with armaments, nuclear technology or weapons, if and to the extent such use is subject to prohibition or authorization, unless required authorization is provided;
- the regulations of all applicable Sanctioned Party Lists of the European Union and the United States of America concerning the trading with entities, persons and organizations listed therein are considered.

If required to enable authorities or us to conduct export control checks, you, upon request by us, shall promptly provide us with all information pertaining to the particular end customer, the particular destination and the particular intended use of goods, works and services provided by us, as well as any export control restrictions existing.

You acknowledge that under the EU embargo regulations against Iran, Syria and Russia respectively the sale of certain listed goods and related services is subject to authorization by the competent export control authorities of the European Union. If (i) the goods or services ordered by you are destined for Iran, Syria or Russia, and (ii) the contract for our supplies and/or services is subject to prior authorization of the competent export control authorities of the European Union, the contract between you and us shall come into force in this respect only upon granting of such authorization.

The products listed in this catalog may be subject to European/German and/or US export regulations. Any export requiring approval is therefore subject to authorization by the relevant authorities.

Errors excepted and subject to change without prior notice.

© Siemens 2022

Easy product selection and ordering: Industry Mall

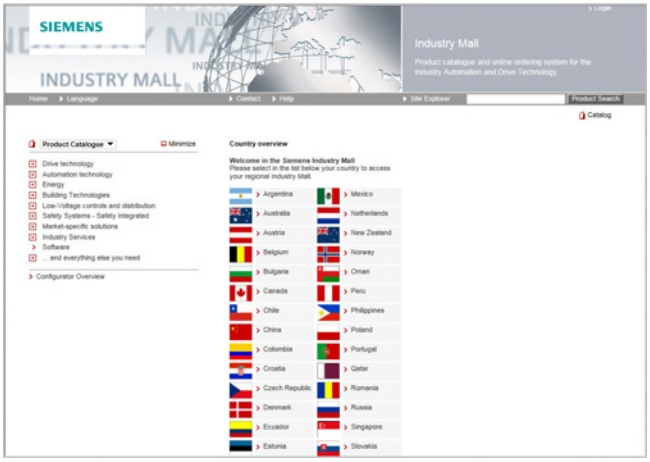

Industry Mall

The Industry Mall is a Siemens AG Internet ordering platform. It provides you with online access to a comprehensive product spectrum that is presented in an informative, well-organized way.

Powerful search functions help you select the required products, while configurators enable you to configure complex product and system components quickly and easily. CAx data are also available for you to use.

Data transfer allows the entire procedure, from selection through ordering to tracking and tracing, to be carried out online. Availability checks, individual customer discounting, and quotation preparation are also possible.

www.siemens.com/industrymall

Downloading catalogs

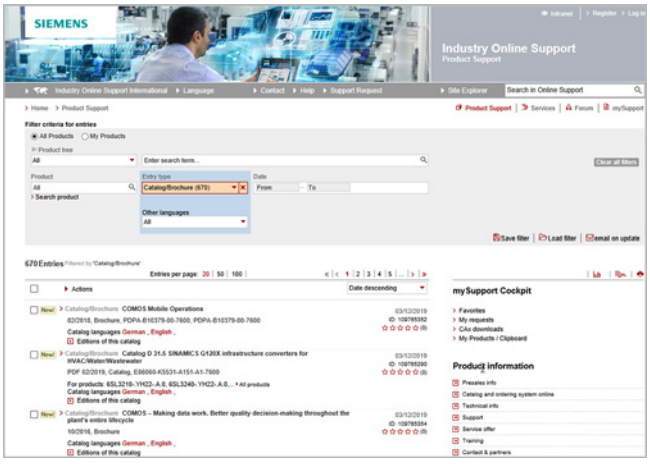

Siemens Industry Online Support

You can download catalogs and brochures in PDF format from Siemens Industry Online Support without having to register.

The filter box makes it possible to perform targeted searches.

www.siemens.com/industry-catalogs

Ordering printed catalogs

Please contact your local Siemens branch if you are interested in ordering printed catalogs.
Addresses can be found at
www.siemens.com/automation-contact

© Siemens 2022

Get more information

SINUMERIK automation systems for machine tools:
www.siemens.com/sinumerik

The SINAMICS converter family:
www.siemens.com/sinamics

Motion Control Systems and Solutions for production machine and machine tool equipment:
www.siemens.com/motioncontrol

Local partners worldwide:
www.siemens.com/automation-contact

Published by
Siemens AG

Digital Industries
Motion Control
Postfach 31 80
91050 Erlangen, Germany

For the U.S. published by
Siemens Industry Inc.

390 Kent Avenue
Elk Grove Village, IL 60007
United States

PDF (E86060-K4462-A101-A4-7600)
V1.MKKATA.MTS.100
KG 0522 814 En
Produced in Germany
© Siemens 2022

Subject to changes and errors. The information given in this document only contains general descriptions and/or performance features which may not always specifically reflect those described, or which may undergo modification in the course of further development of the products. The requested performance features are binding only when they are expressly agreed upon in the concluded contract.

All product designations may be trademarks or product names of Siemens AG or other companies whose use by third parties for their own purposes could violate the rights of the owners.

Security information

Siemens provides products and solutions with industrial security functions that support the secure operation of plants, systems, machines and networks.

In order to protect plants, systems, machines and networks against cyber threats, it is necessary to implement – and continuously maintain – a holistic, state-of-the-art industrial security concept. Siemens' products and solutions constitute one element of such a concept.

Customers are responsible for preventing unauthorized access to their plants, systems, machines and networks. Such systems, machines and components should only be connected to an enterprise network or the internet if and to the extent such a connection is necessary and only when appropriate security measures (e.g. firewalls and/or network segmentation) are in place.

For additional information on industrial security measures that may be implemented, please visit
https://www.siemens.com/industrialsecurity

Siemens' products and solutions undergo continuous development to make them more secure. Siemens strongly recommends that product updates are applied as soon as they are available and that the latest product versions are used. Use of product versions that are no longer supported, and failure to apply the latest updates may increase customer's exposure to cyber threats.

To stay informed about product updates, subscribe to the Siemens Industrial Security RSS Feed under.
https://www.siemens.com/cert.