SIEMENS

SIMATIC NET

Industrial Ethernet switches SCALANCE XC-200

Operating Instructions

Introduction 1

Safety notices 2

Security recommendations 3

Description of the device 4

Installing and removing 5

Connecting 6

Maintenance and cleaning 7

Troubleshooting 8

Technical specifications 9

Dimension drawings 10

Approvals 11

06/2025
C79000-G8976-C442-16

Промэлектроника, sales@prom-elec.com

sales@prom-elec.com / ООО ПРОМЭЛЕКТРОНИКА

Legal information

Warning notice system

This manual contains notices you have to observe in order to ensure your personal safety, as well as to prevent damage to property. The notices referring to your personal safety are highlighted in the manual by a safety alert symbol, notices referring only to property damage have no safety alert symbol. These notices shown below are graded according to the degree of danger.

⚠ DANGER
indicates that death or severe personal injury **will** result if proper precautions are not taken.

⚠ WARNING
indicates that death or severe personal injury **may** result if proper precautions are not taken.

⚠ CAUTION
indicates that minor personal injury can result if proper precautions are not taken.

NOTICE
indicates that property damage can result if proper precautions are not taken.

If more than one degree of danger is present, the warning notice representing the highest degree of danger will be used. A notice warning of injury to persons with a safety alert symbol may also include a warning relating to property damage.

Qualified Personnel

The product/system described in this documentation may be operated only by **personnel qualified** for the specific task in accordance with the relevant documentation, in particular its warning notices and safety instructions. Qualified personnel are those who, based on their training and experience, are capable of identifying risks and avoiding potential hazards when working with these products/systems.

Proper use of Siemens products

Note the following:

⚠ WARNING
Siemens products may only be used for the applications described in the catalog and in the relevant technical documentation. If products and components from other manufacturers are used, these must be recommended or approved by Siemens. Proper transport, storage, installation, assembly, commissioning, operation and maintenance are required to ensure that the products operate safely and without any problems. The permissible ambient conditions must be complied with. The information in the relevant documentation must be observed.

Trademarks

All names identified by ® are registered trademarks of Siemens Aktiengesellschaft. The remaining trademarks in this publication may be trademarks whose use by third parties for their own purposes could violate the rights of the owner.

Disclaimer of Liability

We have reviewed the contents of this publication to ensure consistency with the hardware and software described. Since variance cannot be precluded entirely, we cannot guarantee full consistency. However, the information in this publication is reviewed regularly and any necessary corrections are included in subsequent editions.

Siemens Aktiengesellschaft
Digital Industries
Postfach 48 48
90026 NÜRNBERG
GERMANY

C79000-G8976-C442-16
Ⓟ 06/2025 Subject to change

Copyright © Siemens 2016 - 2025.
All rights reserved

Table of contents

1 Introduction ... 7

2 Safety notices ... 13

3 Security recommendations ... 15

3.1 Security recommendations ... 15

3.2 Available services ... 18

4 Description of the device ... 21

4.1 Product overview ... 21

4.2 Device views ... 27
4.2.1 SCALANCE XC206-2 (ST/BFOC) ... 27
4.2.2 SCALANCE XC206-2 (SC) ... 28
4.2.3 SCALANCE XC206-2G PoE ... 29
4.2.4 SCALANCE XC206-2SFP ... 30
4.2.5 SCALANCE XC208 ... 30
4.2.6 SCALANCE XC208G PoE ... 32
4.2.7 SCALANCE XC216 ... 33
4.2.8 SCALANCE XC216-3G PoE ... 34
4.2.9 SCALANCE XC216-4C ... 34
4.2.10 SCALANCE XC224 ... 36
4.2.11 SCALANCE XC224-4C ... 37

4.3 Accessories ... 37

4.4 SELECT / SET button ... 42

4.5 LED display ... 44
4.5.1 Overview ... 44
4.5.2 "RM" LED ... 45
4.5.3 "SB" LED ... 45
4.5.4 "F" LED ... 45
4.5.5 LEDs "DM1" and "DM2" ... 46
4.5.6 LEDs "L1" and "L2" ... 46
4.5.7 Port LEDs ... 47

4.6 C-PLUG ... 48
4.6.1 Function of the C-PLUG ... 48
4.6.2 Position of the C-PLUG ... 50

4.7 Combo ports ... 50

4.8 Power over Ethernet (PoE) ... 51
4.8.1 Power and voltage range according to the standard ... 51
4.8.2 PoE properties of the devices ... 52
4.8.3 Power transfer and pin assignment (30 W) ... 53
4.8.4 Power transfer and pin assignment (60 W) ... 54
4.8.5 Configuration ... 54

5 Installing and removing ... 55

5.1 Safety notices for installation ... 55

5.2 General notes for SFP transceivers ... 58

5.3 Types of installation ... 59

5.4 Installation clearance ... 59

5.5 Installation position ... 59

5.6 Installation on a DIN rail ... 60
5.6.1 Top-hat rail mounting with fastening plate ... 60
5.6.2 Top-hat rail mounting without fastening plate ... 61

5.7 Installation on a standard S7-300 rail ... 62
5.7.1 Installation on a standard rail S7-300 with fastening plate ... 62
5.7.2 Installation on a standard rail S7-300 without fastening plate ... 63

5.8 Installation on a standard rail S7-1500 ... 64
5.8.1 Installation on a standard rail S7-1500 with fastening plate ... 64
5.8.2 Installation on a standard rail S7-1500 without fastening plate ... 66

5.9 Wall mounting with fastening plate ... 67

5.10 Changing the position of the securing bar ... 68

5.11 Disassembly ... 69

6 Connecting ... 71

6.1 Safety notices for devices without PoE ... 71

6.2 Safety notices for PoE devices ... 74

6.3 Safety instructions on use in hazardous areas ... 77

6.4 Further notes ... 79

6.5 Industrial Ethernet ... 80
6.5.1 Electrical ... 80
6.5.2 Optical ... 82

6.6 Wiring rules ... 83

6.7 24 V DC power supply ... 84

6.8 54 V DC power supply ... 85

6.9 Signaling contact ... 87

6.10 Functional ground ... 88

6.11 Serial interface ... 89

6.12 Replacing a C-PLUG ... 90

7 Maintenance and cleaning ... 93

8 Troubleshooting ... 95

8.1 Downloading new firmware using TFTP without WBM and CLI ... 95

8.2 Restoring the factory settings ... 96

9 Technical specifications ... 97
9.1 Technical specifications SCALANCE XC206-2 (ST/BFOC) ... 97
9.2 Technical specifications SCALANCE XC206-2 (SC) ... 99
9.3 Technical specifications of SCALANCE XC206-2G PoE ... 102
9.4 Technical specifications of SCALANCE XC206-2G PoE (54 V) ... 104
9.5 Technical specifications of SCALANCE XC206-2G PoE EEC (54 V) ... 106
9.6 Technical specifications SCALANCE XC206-2SFP ... 109
9.7 Technical specifications of SCALANCE XC206-2SFP G ... 111
9.8 Technical specifications of SCALANCE XC206-2SFP EEC ... 113
9.9 Technical specifications of SCALANCE XC206-2SFP G EEC ... 116
9.10 Technical specifications of the SCALANCE XC208 ... 119
9.11 Technical specifications of SCALANCE XC208G ... 121
9.12 Technical specifications of SCALANCE XC208G PoE ... 123
9.13 Technical specifications of SCALANCE XC208G PoE (54 V) ... 125
9.14 Technical specifications of SCALANCE XC208EEC ... 127
9.15 Technical specifications of SCALANCE XC208G EEC ... 129
9.16 Technical specifications of the SCALANCE XC216 ... 131
9.17 Technical specifications of SCALANCE XC216EEC ... 133
9.18 Technical specifications of SCALANCE XC216-3G PoE ... 134
9.19 Technical specifications of SCALANCE XC216-3G PoE (54 V) ... 136
9.20 Technical specifications of SCALANCE XC216-4C ... 139
9.21 Technical specifications of SCALANCE XC216-4C G ... 141
9.22 Technical specifications of SCALANCE XC216-4C G EEC ... 143
9.23 Technical specifications of the SCALANCE XC224 ... 146
9.24 Technical specifications of SCALANCE XC224-4C G ... 148
9.25 Technical specifications of SCALANCE XC224-4C G EEC ... 150
9.26 Mechanical stability (in operation) ... 152
9.27 Resistance to harmful gases according to ISA-71.04 ... 152
9.28 RF radiation according to NAMUR NE21 ... 153
9.29 Cable lengths ... 153
9.30 Switching properties ... 153
10 Dimension drawings ... 155
11 Approvals ... 163
Index ... 173

Introduction

1

Purpose of the Operating Instructions

These operating instructions support you when installing and connecting up devices of the SCALANCE XC-200 product group.

The configuration and the integration of the devices in a network are not described in these operating instructions.

Validity of the Operating Instructions

These operating instructions apply to the following devices:

- SCALANCE XC206-2 (ST/BFOC)
- SCALANCE XC206-2 (SC)
- SCALANCE XC206-2G PoE
- SCALANCE XC206-2G PoE (54 V)
- SCALANCE XC206-2G PoE EEC (54 V)
- SCALANCE XC206-2SFP
- SCALANCE XC206-2SFP G
- SCALANCE XC206-2SFP EEC
- SCALANCE XC206-2SFP G EEC
- SCALANCE XC208
- SCALANCE XC208G
- SCALANCE XC208G PoE
- SCALANCE XC208G PoE (54 V)
- SCALANCE XC208EEC
- SCALANCE XC208G EEC
- SCALANCE XC216
- SCALANCE XC216EEC
- SCALANCE XC216-3G PoE
- SCALANCE XC216-3G PoE (54 V)
- SCALANCE XC216-4C
- SCALANCE XC216-4C G
- SCALANCE XC216-4C G EEC
- SCALANCE XC224

- SCALANCE XC224-4C G
- SCALANCE XC224-4C G EEC

Unless mentioned otherwise, the descriptions in these operating instructions refer to all devices of the SCALANCE XC-200 product group named above in the section on validity.

Designations used

Table 1-1 Explanation of designations used

Classification	Description	Terms used
Product line	The product line includes all devices and variants of all product groups. If information applies to all product groups within the product line, the term SCALANCE X-200 is used.	SCALANCE X-200
Product group	If information applies to all devices and variants of a product group, the term SCALANCE XC-200 is used.	SCALANCE XC-200
Device	If information relates to a specific device, the device name is used.	e.g. SCALANCE XC206-2SFP
Device group	If information applies to a specific group of devices, a corresponding abbreviation is used.	
	If information applies to all gigabit variants of SCALANCE XC-200, the following terms are used. You can recognize the gigabit variants by the suffix "G" in the type designation. Devices that only support gigabit via SFPs are not considered gigabit variants (e.g. SCALANCE XC206-2SFP).	SCALANCE XC-200G, gigabit variants
	If information applies to all SCALANCE XC-200 with coated circuit boards, the following terms are used. You can recognize the EEC variants by the suffix "EEC" in the type designation.	SCALANCE XC-200EEC, EEC variants
	If information applies to all SCALANCE XC-200 with combo ports, the following term is used. You recognize devices with combo ports by the suffix "C" in the type designation.	Devices with combo ports
	If information applies to all SCALANCE XC-200 with Power over Ethernet, the following terms are used. You can recognize the PoE variants by the suffix "PoE" in the type designation.	SCALANCE XC-200PoE, PoE variants

Additional documentation

In addition, note the Operating Instructions of the pluggable transceivers.

You will find the supplementary documentation here:

- On the data medium that ships with some products:
  - Product CD / product DVD
  - SIMATIC NET Manual Collection
- On the Internet pages of Siemens Industry Online Support (https://support.industry.siemens.com/cs/ww/en/ps/15247)

Documentation on configuration

You will find detailed information on configuring the devices in the following configuration manuals:

- SCALANCE Layer 2 Switches Web Based Management (WBM) Vx.x
- SCALANCE Layer 2 Switches Command Line Interface (CLI) Vx.x

You will find the configuration manuals here:

- on the data medium that ships with some products:
  - Product CD / product DVD
  - SIMATIC NET Manual Collection
- On the Internet pages of Siemens Industry Online Support (https://support.industry.siemens.com/cs/ww/en/ps/24185/man).

Further documentation

In the system manuals "Industrial Ethernet / PROFINET Industrial Ethernet" and "Industrial Ethernet / PROFINET passive network components", you will find information on other SIMATIC NET products that you can operate along with the devices of this product line in an Industrial Ethernet network.

There, you will find among other things optical performance data of the communications partner that you require for the installation.

You will find the system manuals here:

- On the data medium that ships with some products:
  - Product CD / product DVD
  - SIMATIC NET Manual Collection
- On the Internet pages of Siemens Industry Online Support:
  - Industrial Ethernet / PROFINET Industrial Ethernet System Manual (https://support.industry.siemens.com/cs/ww/en/view/27069465)
  - Industrial Ethernet / PROFINET Passive Network Components System Manual (https://support.industry.siemens.com/cs/ww/en/view/84922825)

SIMATIC NET manuals

You will find the SIMATIC NET manuals here:

- On the Internet pages of Siemens Industry Online Support (https://support.industry.siemens.com/cs/ww/en/ps/15247).

SIMATIC NET glossary

Explanations of many of the specialist terms used in this documentation can be found in the SIMATIC NET glossary.

You will find the SIMATIC NET glossary here:

- SIMATIC NET Manual Collection or product DVD
  The DVD ships with certain SIMATIC NET products.
- On the Internet under the following address:
  50305045 (https://support.industry.siemens.com/cs/ww/en/view/50305045)

Cybersecurity notes

Siemens provides products and solutions with industrial cybersecurity functions that support the secure operation of plants, systems, machines and networks.

In order to protect plants, systems, machines and networks against cyber threats, it is necessary to implement – and continuously maintain – a holistic, state-of-the-art industrial cybersecurity concept. Siemens' products and solutions constitute one element of such a concept.

Customers are responsible for preventing unauthorized access to their plants, systems, machines and networks. Such systems, machines and components should only be connected to an enterprise network or the internet if and to the extent such a connection is necessary and only when appropriate security measures (e.g. firewalls and/or network segmentation) are in place.

For additional information on industrial cybersecurity measures that may be implemented, please visit
https://www.siemens.com/cybersecurity-industry (https://www.siemens.com/industrialsecurity).

Siemens' products and solutions undergo continuous development to make them more secure. Siemens strongly recommends that product updates are applied as soon as they are available and that the latest product versions are used. Use of product versions that are no longer supported, and failure to apply the latest updates may increase customer's exposure to cyber threats.

To stay informed about product updates, subscribe to the Siemens Industrial Cybersecurity RSS Feed under
https://new.siemens.com/cert (https://www.siemens.com/cert).

Note on firmware/software support

Check regularly for new firmware/software versions or security updates and apply them. After the release of a new version, previous versions are no longer supported and are not maintained.

Catalogs

You will find the article numbers for the Siemens products of relevance here in the following catalogs:

- SIMATIC NET Industrial Communication / Industrial Identification, catalog IK PI
- SIMATIC Products for Totally Integrated Automation and Micro Automation, catalog ST 70
- Industry Mall - catalog and ordering system for automation and drive technology, Online catalog (https://mall.industry.siemens.com/goos/WelcomePage.aspx?regionUrl=/de&language=en)

You can request the catalogs and additional information from your Siemens representative.

Device defective

If a fault develops, send the device to your SIEMENS representative for repair. Repairs on-site are not possible.

Decommissioning

Shut down the device properly to prevent unauthorized persons from accessing confidential data in the device memory.

To do this, restore the factory settings on the device.

Also restore the factory settings on the storage medium.

Recycling and disposal

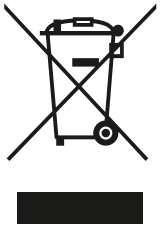

The products are low in pollutants, can be recycled and meet the requirements of the WEEE directive 2012/19/EU for the disposal of electrical and electronic equipment.

Do not dispose of the products at public disposal sites.

For environmentally friendly recycling and the disposal of your old device contact a certified disposal company for electronic scrap or your Siemens contact (Product return (https://support.industry.siemens.com/cs/ww/en/view/109479891)).

Note the different national regulations.

Trademarks

The following and possibly other names not identified by the registered trademark sign ® are registered trademarks of Siemens AG:

SCALANCE, C-PLUG, OLM

Industry Online Support

In addition to the product documentation, you are supported by the comprehensive online information platform of Siemens Industry Online Support at the following Internet address: Link: (https://support.industry.siemens.com/cs/de/en/)

Apart from news, there you will also find:

- Project information: Manuals, FAQs, downloads, application examples etc.
- Contacts, Technical Forum
- The option submitting a support query:
  Link: (https://support.industry.siemens.com/cs/my?lc=en-WW)
- Our service offer:
  Right across our products and systems, we provide numerous services that support you in every phase of the life of your machine or system - from planning and implementation to commissioning, through to maintenance and modernization.

You will find contact data on the Internet at the following address:
Link: (https://www.automation.siemens.com/aspa_app/?ci=yes&lang=en)

SITRAIN - Training for Industry

The training offer includes more than 300 courses on basic topics, extended knowledge and special knowledge as well as advanced training for individual sectors - available at more than 130 locations. Courses can also be organized individually and held locally at your location.

You will find detailed information on the training curriculum and how to contact our customer consultants at the following Internet address:

Link: (https://new.siemens.com/global/en/products/services/industry/sitrain/personal.html)

Industrial Networks Education

Training and certification for Industrial Networks

In our Industrial Networks Education courses you'll learn to design and implement wired and wireless data networks and connect them to a corporate network. You will also receive instruction on how to secure, diagnose and optimize communication networks. Certification can also be offered to supplement almost all training courses.

Link: (https://www.siemens.com/industrial-networks-education)

Electrostatic discharge

NOTICE

Electrostatic sensitive devices (ESD)

Electronic modules contain electrostatic sensitive components

These components can easily be destroyed if handled incorrectly.

Note the following instructions to avoid damage.

- Touch electronic modules only when you absolutely need to work on them.
- If electronic modules need to be touched, the body of the person involved must first be electrostatically discharged and grounded.
- Do not bring electronic modules in contact with electrically isolating materials such as plastic film, isolating table top pads or clothing made of synthetic fibers.
- Place the modules only on conductive surfaces.
- Pack, store and transport electronic modules and components only in their product packaging or in a conductive packaging such as metalized plastic or metal containers, conductive foam or household aluminum foil.

Safety notices

2

Read the safety notices

Note the following safety notices. These relate to the entire working life of the device.

You should also read the safety notices relating to handling in the individual sections, particularly in the sections "Installation" and "Connecting up".

⚠ CAUTION
To prevent injury and damage, read the manual before using the device.

NOTICE
Information security Connect to the device and change the standard password for the user set in the factory "admin" and "" before you operate the device.

Safety notices on use in hazardous areas

General safety notices relating to protection against explosion

⚠ WARNING
EXPLOSION HAZARD Do not open the device when the supply voltage is turned on.

Safety instructions for use in hazardous locations according to UL/FM HazLoc

If you use the device under UL or FM HazLoc conditions, you must also adhere to the following safety instructions in addition to the general safety instructions for protection against explosion:

This equipment is suitable for use in Class I, Division 2, Groups A, B, C and D or non-hazardous locations only.

This equipment is suitable for use in Class I, Zone 2, Group IIC or non-hazardous locations only.

Security recommendations 3

3.1 Security recommendations

Software (security functions)

- Keep the firmware up to date. Check regularly for security updates for the device. You can find information on this at the Industrial Security (https://www.siemens.com/industrialsecurity) website.
- Inform yourself regularly about security recommendations published by Siemens ProductCERT (https://www.siemens.com/cert).
- Only activate protocols that you require to use the device.
- Restrict access to the management of the device with rules in an access control list (ACL).
- The option of VLAN structuring provides protection against DoS attacks and unauthorized access. Check whether this is practical or useful in your environment.
- Use a central logging server to log changes and accesses. Operate your logging server within the protected network area and check the logging information regularly.

Authentication

Note

Accessibility risk - Risk of data loss

Do not lose the passwords for the device. Access to the device can only be restored by resetting the device to factory settings which completely removes all configuration data.

- Replace the default passwords for all user accounts, access modes and applications (if applicable) before you use the device.
- Define rules for the assignment of passwords.
- Use passwords with a high password strength. Avoid weak passwords, (e.g. password1, 123456789, abcdefgh) or recurring characters (e.g. abcabc).
  This recommendation also applies to symmetrical passwords/keys configured on the device.
- Make sure that passwords are protected and only disclosed to authorized personnel.
- Do not use the same passwords for multiple user names and systems.
- Store the passwords in a safe location (not online) to have them available if they are lost.
- Regularly change your passwords to increase security.
- A password must be changed if it is known or suspected to be known by unauthorized persons.

- When user authentication is performed via RADIUS, make sure that all communication takes place within the security environment or is protected by a secure channel.
- Watch out for link layer protocols that do not offer their own authentication between endpoints, such as ARP or IPv4. An attacker could use vulnerabilities in these protocols to attack hosts, switches and routers connected to your layer 2 network, for example, through manipulation (poisoning) of the ARP caches of systems in the subnet and subsequent interception of the data traffic. Appropriate security measures must be taken for non-secure layer 2 protocols to prevent unauthorized access to the network. Physical access to the local network can be secured or secure, higher layer protocols can be used, among other things.

Certificates and keys

- The devices SCALANCE XF204G, SCALANCE XB206-2 as of firmware version V4.4 or SCALANCE XP-200G, SCALANCE XP-200G PP as of firmware version V4.5 use certificates for elliptic curve cryptography ("ECDSA certificates"). Only use ECDSA certificates in PEM format that were generated with the following curves:
  - secp256r1 (NIST P-256)
  - secp384r1 (NIST P-384)
  - secp521r1 (NIST P-521)

  On the device there is a preset SSL certificate with the key length 256 bits for the elliptic-curves cryptography. Replace this certificate with a self-made certificate with key. We recommend that you use a certificate signed either by a reliable external or by an internal certification authority.
- There is a preset SSL/TLS (RSA) certificate with 2048 bit key length in other devices. Replace this certificate with a user-generated, high-quality certificate with key. Use a certificate signed by a reliable external or internal certification authority. You can install the certificate via the WBM ("System > Load and Save").
- Use a certification authority including key revocation and management to sign certificates.
- Make sure that user-defined private keys are protected and inaccessible to unauthorized persons.
- Verify certificates and fingerprints on the server and client to prevent "man in the middle" attacks.
- Change certificates and keys immediately if there is a suspicion of compromise.

Secure/non-secure protocols and services

- Avoid or disable non-secure protocols and services, for example HTTP, Telnet and TFTP. For historical reasons, these protocols are available, however not intended for secure applications. Use non-secure protocols on the device with caution.
- Check whether use of the following protocols and services is necessary:
  - Non authenticated and unencrypted ports
  - HTTP
  - Telnet
  - SNMPv1/v2c
  - NTP
  - MRP, HRP, STP, RSTP and MSTP
  - IGMP snooping
  - LLDP
  - DCP
  - Syslog
  - DHCP Options 66/67
  - TFTP
  - GMRP and GVRP
- The following protocols provide secure alternatives:
  - HTTP → HTTPS
  - Telnet → SSH
  - SNMPv1/v2c → SNMPv3
    Check whether use of SNMPv1/v2c. is necessary. SNMPv1/v2c is classified as non-secure. Use the option of preventing write access. The device provides you with suitable setting options.
    If SNMP is enabled, change the community names. If no unrestricted access is necessary, restrict access with SNMP.
    Use the authentication and encryption mechanisms of SNMPv3.
  - TFTP → SFTP
  - NTP → NTPsecure
- Use secure protocols when access to the device is not prevented by physical protection measures.
- If you require non-secure protocols and services, operate the device only within a protected network area.
- Restrict the services and protocols available to the outside to a minimum.
- If you use RADIUS for management access to the device, activate secure protocols and services.
- With authentication on the RADIUS server and RADIUS client, use the Message Authenticator attribute to check packets.

3.2 Available services

List of available services

Note

Packet filtering

Packets are processed according to their importance for the operation of the network. Some packets directed to the CPUs of the switch may be discarded due to various security-relevant packet filters. Therefore, it can occur that not all ICMP packets are delivered to the CPUs, for example, and are thus not responded to.

The following is a list of all available services and their ports through which the device can be accessed.

The table includes the following columns:

- **Service**
  The services that the device supports
- **Default port status**
  This is the status of the port in the delivery state (factory setting).
- **Configurable port/service**
  Indicates whether the port number or the service can be configured via WBM / CLI.
- **Authentication**
  Specifies whether the communication partner is authenticated.
  If optional, the authentication can be configured as required.
- **Encryption**
  Specifies whether the transfer is encrypted.
  If optional, the encryption can be configured as required.

The following is a list of all available protocols and services as well as their ports through which the device can be accessed.

Service	Protocol / Port number	Default port status	Configurable		Authentication	Encryption [5)]
			Port	Service		
DHCPv4 Server	UDP/67	Closed	-	✓	-	-
DHCPv4 Client	UDP/68	Open	-	✓	-	-
EtherNet/IP	TCP/44818 UDP/2222 UDP/44818	Closed (Open with EtherNetIP variants)	-	✓	-	-
HTTP Server/Client [3)]	TCP/80	Closed	✓	✓	✓	-
HTTPS WBM Server/ Client	TCP/443	Open	✓	✓	✓	✓
NTP Client	UDP/123	Closed	✓	✓	-	-
NTP (secure)	UDP/123	Closed	✓	✓	✓	-

Service	Protocol / Port number	Default port status	Configurable		Authentication	Encryption [5]
			Port	Service		
PROFINET	UDP/34964 UDP/49151 ... 49159 [1]	Open	-	✓	-	-
RADIUS Client	UPD/1812 [4] UPD/1813 [4]	Outbound only	✓	✓	-	-
	UDP/3799	Open	✓	✓	-	-
SFTP Server	UDP/22	Outbound only	✓	✓	✓	✓
SMTP Client	TCP/25	Closed	✓	✓	-	-
SMTP Client (secure)	TCP/465	Closed	✓	✓	✓	✓
SNMPv1/v2c [2] [3]	UDP/161	Open	✓	✓	-	-
SNMPv3	UDP/161	Open	✓	✓	Optional	Optional
SNMP Traps	UDP/162	Outbound only	-	✓	-	-
SNTP Client	UDP/123	Closed	✓	✓	-	-
SSH CLI Server	TCP/22	Open	✓	✓	✓	✓
Syslog Client	UDP/514	Closed	✓	✓	-	-
Syslog (secure) Client	TCP/6514	Closed	✓	✓	-	✓
Telnet [3]	TCP/23	Closed	✓	✓	✓	-
TFTP Client	UDP/69	Outbound only	✓	✓	-	-

1) Port number can be configured via the WBM.

2) Read-only access only.

3) Protocol according to Security by Default.

4) The port is closed by default and is displayed when a RADIUS server is configured. Port number can be configured via the WBM.

5) You can find additional information on the encryption methods used in the WBM appendix "Ciphers used".

The following is a list of all available Layer 2 services through which the device can be accessed.

The table includes the following columns:

- **Layer 2 service**
  The Layer 2 services that the device supports.
- **Default status**
  The default status of the service (open or closed).
- **Service configurable**
  Indicates whether the service can be configured via WBM / CLI.

Layer 2 service	Default port status	Service configurable
DCP	Setup mode [1]	✓
LLDP	Open	✓

Layer 2 service	Default port status	Service configurable
RSTP	Closed	✓
MSTP	Open	✓

1) Setting according to Security by Default.

Description of the device

4

4.1 Product overview

Article numbers

There are two variants of some devices with different article numbers. The two variants differ only in their factory settings. All other properties are identical.

Device	Description	Article number
SCALANCE XC206-2 (ST/BFOC)	• 6 x 10/100 Mbps RJ45 ports • 2 x 100 Mbps ST/BFOC ports, multimode fiber-optic cable	PROFINET: 6GK5 206-2BB00-2AC2
SCALANCE XC206-2 (SC)	• 6 x 10/100 Mbps RJ45 ports • 2 x 100 Mbps SC ports, multimode fiber-optic cable	PROFINET: 6GK5 206-2BD00-2AC2
SCALANCE XC206-2G PoE	• 6 x 10/100/1000 Mbps RJ45 ports • 2 x pluggable transceiver slots with 1000/10000 Mbps (SFP+) • Power over Ethernet at 6 ports • Rated voltage 24 V DC	PROFINET: 6GK5 206-2RS00-2AC2
SCALANCE XC206-2G PoE (54 V)	• 6 x 10/100/1000 Mbps RJ45 ports • 2 x pluggable transceiver slots with 1000/10000 Mbps (SFP+) • Power over Ethernet at 6 ports • Rated voltage 54 V DC	PROFINET: 6GK5 206-2RS00-5AC2
SCALANCE XC206-2G PoE EEC (54 V)	• 6 x 10/100/1000 Mbps RJ45 ports • 2 x pluggable transceiver slots with 1000/10000 Mbps (SFP+) • Power over Ethernet at 6 ports • Rated voltage 54 V DC • Coated printed circuit board	PROFINET: 6GK5 206-2RS00-5FC2
SCALANCE XC206-2SFP	• 6 x 10/100 Mbps RJ45 ports • 2 x pluggable transceiver slots with 100/1000 Mbps	PROFINET: 6GK5 206-2BS00-2AC2
SCALANCE XC206-2SFP G	• 6 x 10/100/1000 Mbps RJ45 ports • 2 x pluggable transceiver slots with 1000 Mbps	PROFINET: 6GK5 206-2GS00-2AC2 EtherNet/IP: 6GK5 206-2GS00-2TC2
SCALANCE XC206-2SFP EEC	• 6 x 10/100 Mbps RJ45 ports • 2 x pluggable transceiver slots with 100/1000 Mbps • Coated printed circuit board	PROFINET: 6GK5 206-2BS00-2FC2
SCALANCE XC206-2SFP G EEC	• 6 x 10/100/1000 Mbps RJ45 ports • 2 x pluggable transceiver slots with 1000 Mbps • Coated printed circuit board	PROFINET: 6GK5 206-2GS00-2FC2

Device	Description	Article number
SCALANCE XC208	• 8 x 10/100 Mbps RJ45 ports	PROFINET: 6GK5 208-0BA00-2AC2
SCALANCE XC208G	• 8 x 10/100/1000 Mbps RJ45 ports	PROFINET: 6GK5 208-0GA00-2AC2 EtherNet/IP: 6GK5 208-0GA00-2TC2
SCALANCE XC208G PoE	• 8 x 10/100/1000 Mbps RJ45 ports • Power over Ethernet at 6 ports • Rated voltage 24 V DC	PROFINET: 6GK5 208-0RA00-2AC2
SCALANCE XC208G PoE (54 V)	• 8 x 10/100/1000 Mbps RJ45 ports • Power over Ethernet at 6 ports • Rated voltage 54 V DC	PROFINET: 6GK5 208-0RA00-5AC2
SCALANCE XC208EEC	• 8 x 10/100 Mbps RJ45 ports • Coated printed circuit board	PROFINET: 6GK5 208-0BA00-2FC2
SCALANCE XC208G EEC	• 8 x 10/100/1000 Mbps RJ45 ports • Coated printed circuit board	PROFINET: 6GK5 208-0GA00-2FC2
SCALANCE XC216	• 16 x 10/100 Mbps RJ45 ports	PROFINET: 6GK5 216-0BA00-2AC2
SCALANCE XC216EEC	• 16 x 10/100 Mbps RJ45 ports • Coated printed circuit board	PROFINET: 6GK5 216-0BA00-2FC2
SCALANCE XC216-3G PoE	• 16 x 10/100/1000 Mbps RJ45 ports • 1 x pluggable transceiver slots with 1000 Mbps • 2 x pluggable transceiver slots with 1000/10000 Mbps • Power over Ethernet at 14 ports • Rated voltage 24 V DC	PROFINET: 6GK5 216-3RS00-2AC2
SCALANCE XC216-3G PoE (54 V)	• 16 x 10/100/1000 Mbps RJ45 ports • 1 x pluggable transceiver slots with 1000 Mbps • 2 x pluggable transceiver slots with 1000/10000 Mbps • Power over Ethernet at 14 ports • Rated voltage 54 V DC	PROFINET: 6GK5 216-3RS00-5AC2
SCALANCE XC216-4C	• 12 x 10/100 Mbps RJ45 ports • 4 x combo ports (4 x 10/100 Mbps RJ45 ports/4 x pluggable transceiver slots with 1000 Mbps)	PROFINET: 6GK5 216-4BS00-2AC2
SCALANCE XC216-4C G	• 12 x 10/100/1000 Mbps RJ45 ports • 4 x combo ports (4 x 10/100/1000 Mbps RJ45 ports/4 x pluggable transceiver slots with 1000 Mbps)	PROFINET: 6GK5 216-4GS00-2AC2 EtherNet/IP: 6GK5 216-4GS00-2TC2
SCALANCE XC216-4C G EEC	• 12 x 10/100/1000 Mbps RJ45 ports • 4 x combo ports (4 x 10/100/1000 Mbps RJ45 ports/4 x pluggable transceiver slots with 1000 Mbps) • Coated printed circuit board	PROFINET: 6GK5 216-4GS00-2FC2

Device	Description	Article number
SCALANCE XC224	• 24 x 10/100 Mbps RJ45 ports	PROFINET: 6GK5 224-0BA00-2AC2
SCALANCE XC224-4C G	• 20 x 10/100/1000 Mbps RJ45 ports • 4 x combo ports (4 x 10/100/1000 Mbps RJ45 ports/4 x plug-gable transceiver slots with 1000 Mbps)	PROFINET: 6GK5 224-4GS00-2AC2 EtherNet/IP: 6GK5 224-4GS00-2TC2
SCALANCE XC224-4C G EEC	• 20 x 10/100/1000 Mbps RJ45 ports • 4 x combo ports (4 x 10/100/1000 Mbps RJ45 ports/4 x plug-gable transceiver slots with 1000 Mbps) • Coated printed circuit board	PROFINET: 6GK5 224-4GS00-2FC2

Factory settings

EtherNet/IP variants

- Industrial Ethernet protocol: EtherNet/IP
- Base bridge mode: 802.1Q VLAN Bridge
- Redundancy mechanism: RSTP
- Trust mode: Trust CoS-DSCP
- IGMP Snooping/IGMP Querier: On
- IPv4 Address Collision Detection: Attempt to defend

PROFINET variants

- Industrial Ethernet protocol: PROFINET
- Base bridge mode: 802.1D transparent bridge
- Redundancy mechanism: Ring redundancy
- Trust mode: Trust CoS
- IGMP Snooping/IGMP Querier: Off
- IPv4 Address Collision Detection: Never give up

Article numbers

With PROFINET variants for which the ring redundancy redundancy method is set, the factory setting defines the following ring ports:

Device		Factory setting ring ports
• SCALANCE XC206-2 (ST/BFOC) • SCALANCE XC206-2 (SC)		P0.7 and P0.8
• SCALANCE XC206-2G PoE • SCALANCE XC206-2G PoE (54 V) • SCALANCE XC206-2G PoE EEC (54 V) • SCALANCE XC206-2SFP • SCALANCE XC206-2SFP G • SCALANCE XC206-2SFP EEC • SCALANCE XC206-2SFP G EEC • SCALANCE XC208 • SCALANCE XC208G • SCALANCE XC208EEC • SCALANCE XC208G EEC • SCALANCE XC208G PoE • SCALANCE XC208G PoE (54 V)	• SCALANCE XC216 • SCALANCE XC216EEC • SCALANCE XC216-4C • SCALANCE XC216-4C G • SCALANCE XC216-4C G EEC • SCALANCE XC224 • SCALANCE XC224-4C G • SCALANCE XC224-4C G EEC	P0.1 and P0.2
• SCALANCE XC216-3G PoE • SCALANCE XC216-3G PoE (54 V)		P0.4 and P0.5

Type designation

The type designation of a SCALANCE XC-200 is made up of several parts that have the following meaning:

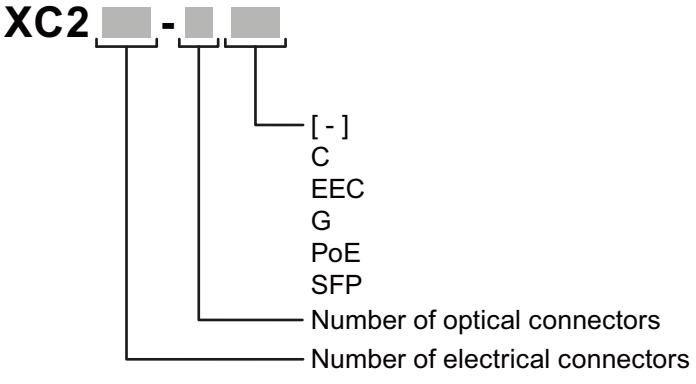

Interfaces of devices with optical connectors:

Interface	Property
C	Combo port
EEC	Enhanced Environment Conditions (coated PCB)
G	Gigabit
PoE	Power over Ethernet
SFP	Pluggable transceiver slot

Unpacking and checking

WARNING

Do not use any parts that show evidence of damage

If you use damaged parts, there is no guarantee that the device will function according to the specification.

If you use damaged parts, this can lead to the following problems:

- Injury to persons
- Loss of the approvals
- Violation of the EMC regulations
- Damage to the device and other components

Use only undamaged parts.

1. Make sure that the package is complete.
2. Check all the parts for transport damage.

Components of the product

The following components are supplied with a SCALANCE XC-200:

- One IE switch
- A 4-pin terminal block for the power supply
- A 2-pin terminal block for the signaling contact
- One product DVD with documentation and software

The following components are also included in the product package of a SCALANCE XC-200 with plug-in transceiver slots (SFPs):

- One cover for each plug-in transceiver slot

The following components are also supplied with a SCALANCE XC206-2:

- 2 covers for optical ports

Spare parts

The following spare parts are available for SCALANCE XC-200:

Component	Description	Article number
Spring-loaded terminal block, 4 terminals	4-terminal spring-loaded terminal block to connect the power supply (24 VDC), for SCALANCE X/W/S/M, pack of 5	6GK5 980-1DB10-0AA5
Spring-loaded terminal block, 2 terminals	2-terminal spring-loaded terminal block to connect the signaling contact (24 VDC), for SCALANCE X/W/S/M, pack of 5	6GK5 980-0BB10-0AA5

4.2 Device views

4.2.1 SCALANCE XC206-2 (ST/BFOC)

The following figure shows an overview of the components of the SCALANCE XC206-2 (ST/BFOC).

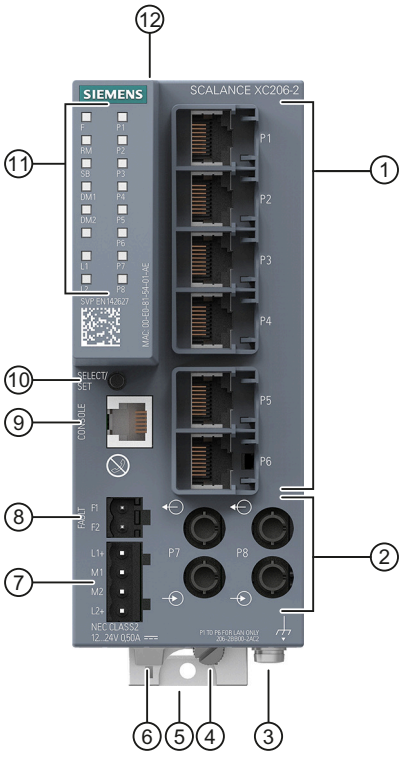

① Electrical ports
② Optical ports
③ Grounding screw
④ Knurled screw
⑤ Securing bar
⑥ Levering aid for moving the securing bar with a screwdriver
⑦ Power supply
⑧ Signaling contact
⑨ Serial interface
⑩ "SELECT / SET" button
⑪ LED display
⑫ C-PLUG slot

4.2.2 SCALANCE XC206-2 (SC)

The following figure shows an overview of the components of the SCALANCE XC206-2 (SC).

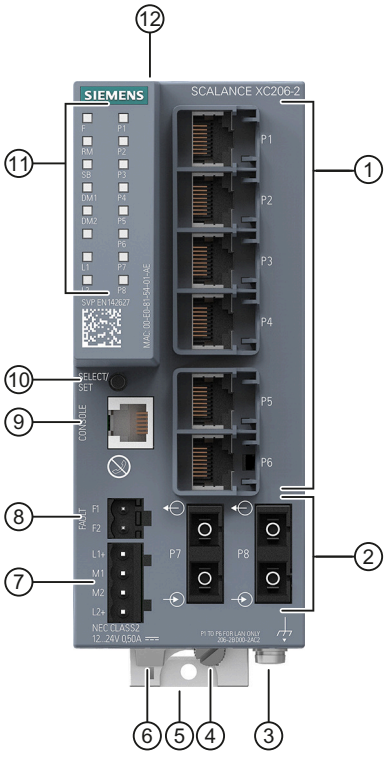

① Electrical ports
② Optical ports
③ Grounding screw
④ Knurled screw
⑤ Securing bar
⑥ Levering aid for moving the securing bar with a screwdriver
⑦ Power supply
⑧ Signaling contact
⑨ Serial interface
⑩ "SELECT / SET" button
⑪ LED display
⑫ C-PLUG slot

4.2.3 SCALANCE XC206-2G PoE

The following figure shows an overview of the components of the SCALANCE XC206-2G PoE depending on the rated voltage.

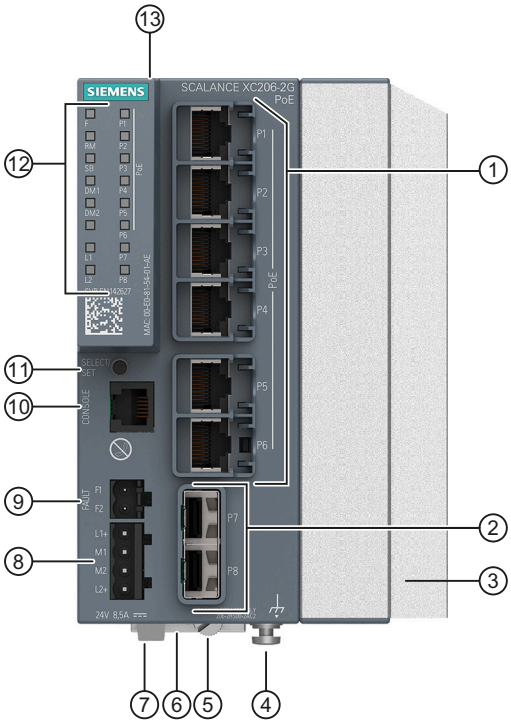

SCALANCE XC206-2G PoE (24 V)

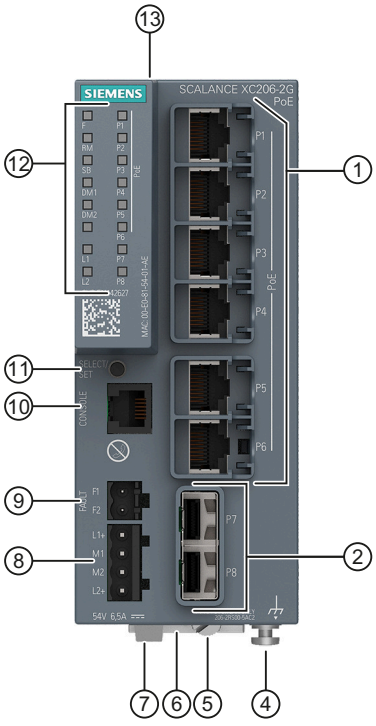

SCALANCE XC206-2G PoE (54 V) and SCALANCE XC206-2G PoE EEC (54 V)

① Electrical ports with PoE
② Pluggable transceiver slots
③ Cooling element (cooling fin)
④ Grounding screw
⑤ Knurled screw
⑥ Securing bar
⑦ Levering aid for moving the securing bar with a screwdriver
⑧ Power supply
⑨ Signaling contact
⑩ Serial interface
⑪ "SELECT / SET" button
⑫ LED display
⑬ C-PLUG slot

4.2.4 SCALANCE XC206-2SFP

The following figure provides an overview of the components of SCALANCE XC206-2SFP and the following devices:

- SCALANCE XC206-2SFP G
- SCALANCE XC206-2SFP EEC
- SCALANCE XC206-2SFP G EEC

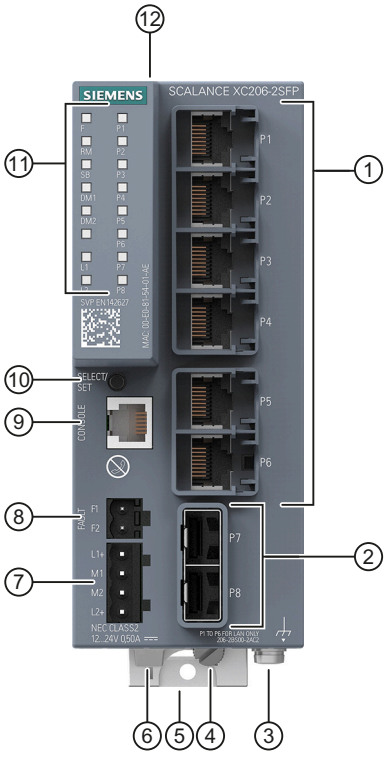

① Electrical ports
② Pluggable transceiver slots
③ Grounding screw
④ Knurled screw
⑤ Securing bar
⑥ Levering aid for moving the securing bar with a screwdriver
⑦ Power supply
⑧ Signaling contact
⑨ Serial interface
⑩ "SELECT / SET" button
⑪ LED display
⑫ C-PLUG slot

4.2.5 SCALANCE XC208

The following figure provides an overview of the components of SCALANCE XC208 and the following devices:

- SCALANCE XC208G
- SCALANCE XC208EEC
- SCALANCE XC208G EEC

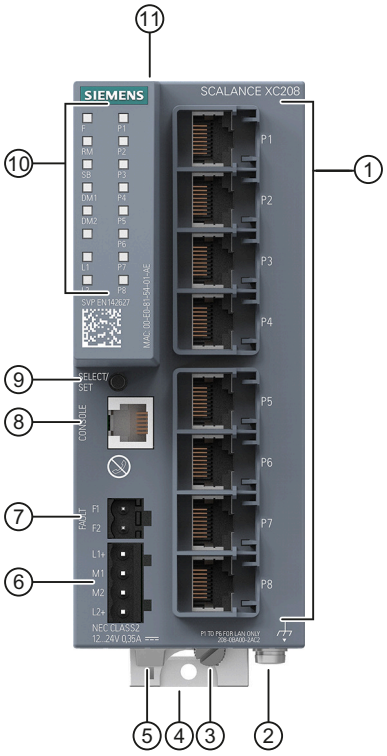

① Electrical ports
② Grounding screw
③ Knurled screw
④ Securing bar
⑤ Levering aid for moving the securing bar with a screwdriver
⑥ Power supply
⑦ Signaling contact
⑧ Serial interface
⑨ "SELECT / SET" button
⑩ LED display
⑪ C-PLUG slot

4.2.6 SCALANCE XC208G PoE

The following figure shows an overview of the components of the SCALANCE XC208G PoE depending on the rated voltage.

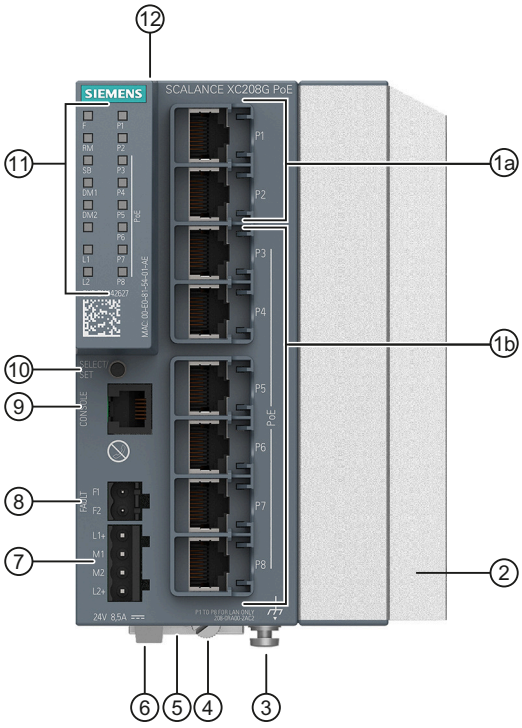

SCALANCE XC208G PoE (24 V)

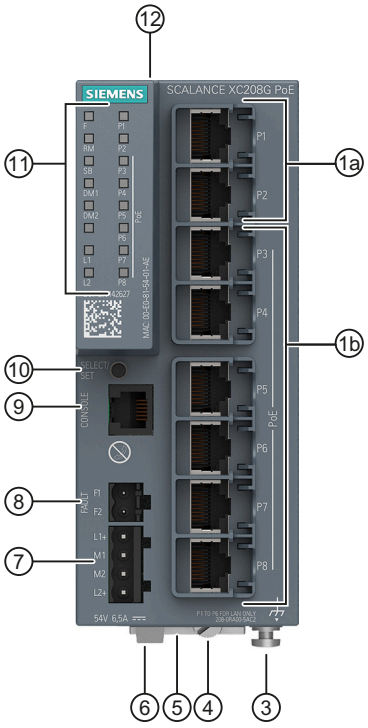

SCALANCE XC208G PoE (54 V)

① a Electrical ports
b Electrical ports with PoE
② Cooling element (cooling fin)
③ Grounding screw
④ Knurled screw
⑤ Securing bar
⑥ Levering aid for moving the securing bar with a screwdriver
⑦ Power supply
⑧ Signaling contact
⑨ Serial interface
⑩ "SELECT / SET" button
⑪ LED display
⑫ C-PLUG slot

4.2.7 SCALANCE XC216

The following figure provides an overview of the components of SCALANCE XC216 and SCALANCE XC216EEC.

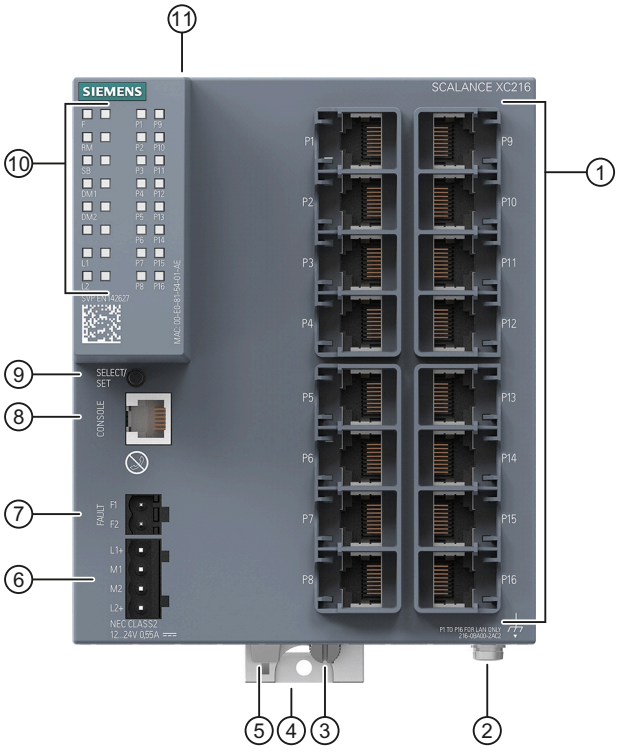

1. Electrical ports
2. Grounding screw
3. Knurled screw
4. Securing bar
5. Levering aid for moving the securing bar with a screwdriver
6. Power supply
7. Signaling contact
8. Serial interface
9. "SELECT / SET" button
10. LED display
11. C-PLUG slot

4.2.8 SCALANCE XC216-3G PoE

The following figure shows an overview of the components of the SCALANCE XC216-3G PoE depending on the rated voltage.

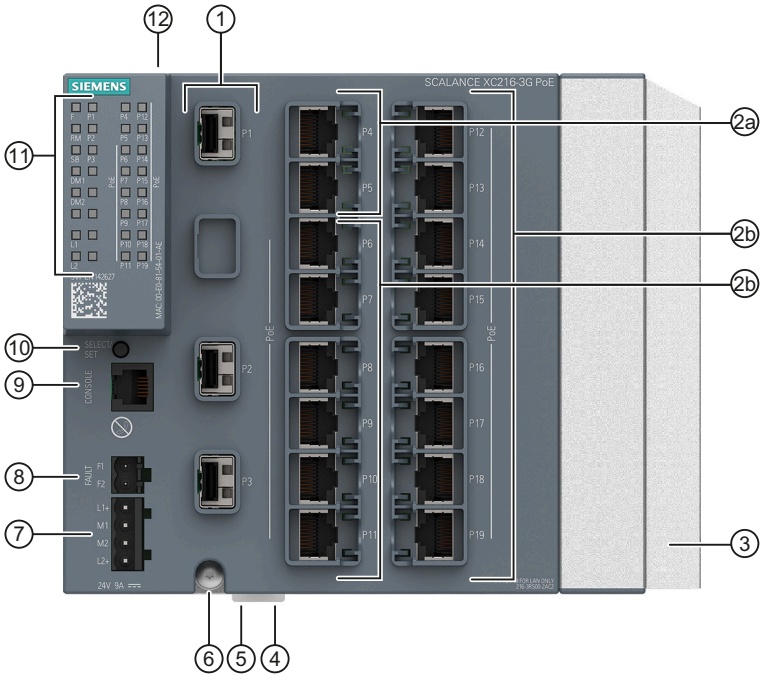

SCALANCE XC216-3G PoE (24 V)

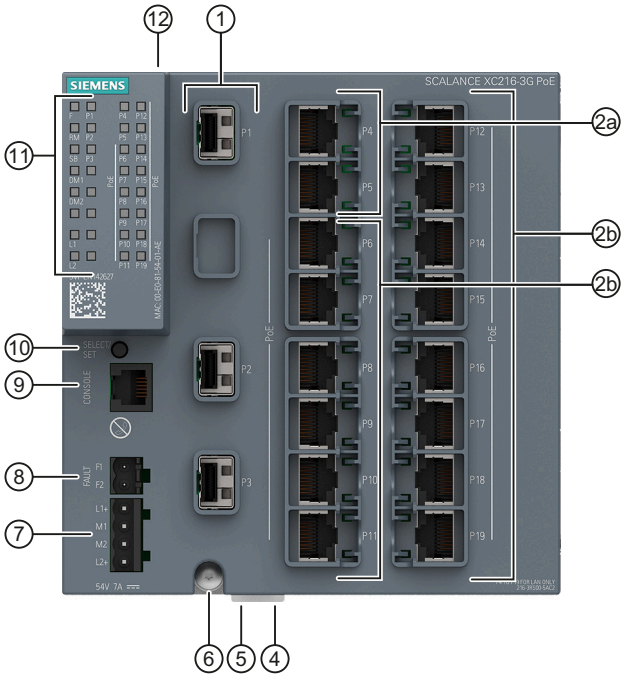

SCALANCE XC216-3G PoE (54 V)

① Pluggable transceiver slots
② a Electrical ports
b Electrical ports with PoE
③ Cooling element (cooling fin)
④ Unlocking the top-hat rail latch
⑤ Location for mounting to an S7 standard rail (on bottom of the device, not in picture)
⑥ Grounding screw
⑦ Power supply
⑧ Signaling contact
⑨ Serial interface
⑩ "SELECT / SET" button
⑪ LED display
⑫ C-PLUG slot

4.2.9 SCALANCE XC216-4C

The following figure provides an overview of the components of SCALANCE XC216-4C and the following devices:

- SCALANCE XC216-4C G
- SCALANCE XC216-4C G EEC

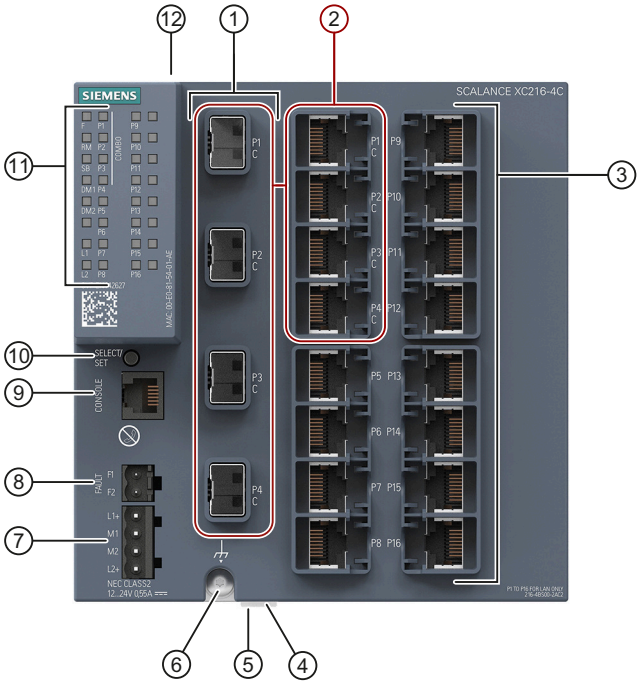

① Pluggable transceiver slots
② Combo ports
③ Electrical ports
④ Unlocking the top-hat rail latch
⑤ Location for mounting to an S7 standard rail (on bottom of the device, not in picture)
⑥ Grounding screw
⑦ Power supply
⑧ Signaling contact
⑨ Serial interface
⑩ "SELECT / SET" button
⑪ LED display
⑫ C-PLUG slot

4.2.10 SCALANCE XC224

The following figure shows an overview of the components of the SCALANCE XC224.

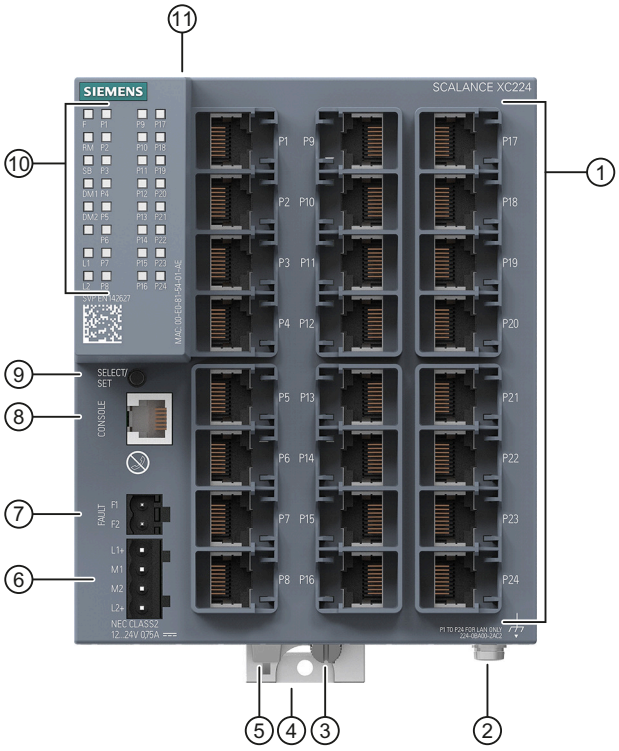

① Electrical ports
② Grounding screw
③ Knurled screw
④ Securing bar
⑤ Levering aid for moving the securing bar with a screwdriver
⑥ Power supply
⑦ Signaling contact
⑧ Serial interface
⑨ "SELECT / SET" button
⑩ LED display
⑪ C-PLUG slot

4.2.11 SCALANCE XC224-4C

The following figure provides an overview of the components of SCALANCE XC224-4C G and SCALANCE XC224-4C G EEC

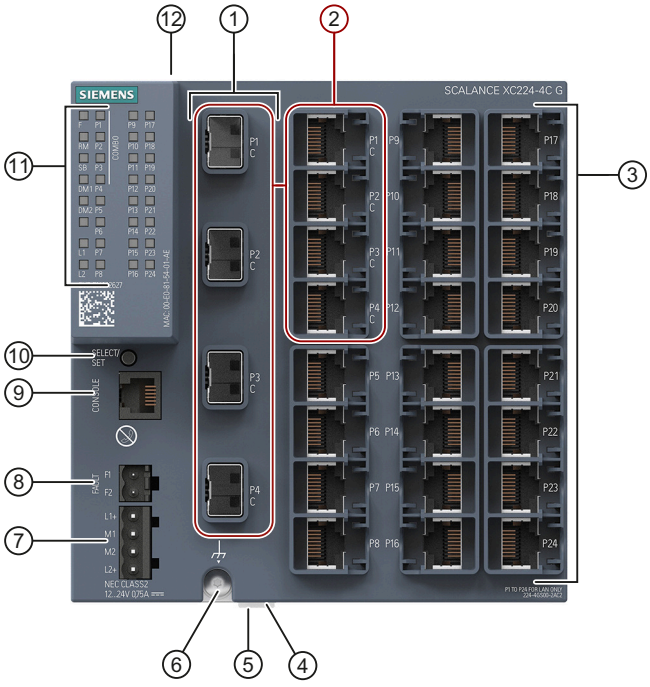

① Pluggable transceiver slots
② Combo ports
③ Electrical ports
④ Unlocking the top-hat rail latch
⑤ Location for mounting to an S7 standard rail (on bottom of the device, not in picture)
⑥ Grounding screw
⑦ Power supply
⑧ Signaling contact
⑨ Serial interface
⑩ "SELECT / SET" button
⑪ LED display
⑫ C-PLUG slot

4.3 Accessories

The following accessories are available for SCALANCE XC-200:

C-PLUG

Component	Description	Article number
C-PLUG	Configuration plug, exchangeable storage medium for saving configuration data, 32 MB, coated (conformal coating)	6GK1 900-0AQ00
	Configuration plug, exchangeable storage medium for saving configuration data, 256 MB	6GK1 900-0AB10

Cable

Component	Description	Article number
Connecting cable (RJ-11/RS-232)	Preassembled, serial cable with RJ-11 and RS-232 plug, Length: 3 m pack of 1	6GK5 980-3BB00-0AA5

Pluggable transceiver SFP (100 Mbps)

Type	Property	Article number
SFP991-1	1 x 100 Mbps, LC port optical for glass FO cable (multimode), up to max. 5 km	6GK5 991-1AD00-8AA0
	10 packing unit (VPE 10)	6GK5 991-1AD00-8AC0
SFP991-1 (C)	1 x 100 Mbps, LC port optical, for glass FO cable (multimode), up to max. 5 km, varnished	6GK5 991-1AD00-8FA0
SFP991-1LD	1 x 100 Mbps LC port optical for glass FO cable (single mode) up to max. 26 km	6GK5 991-1AF00-8AA0
	10 packing unit (VPE 10)	6GK5 991-1AF00-8AC0
SFP991-1LD (C)	1 x 100 Mbps LC port optical for glass FO cable (single mode) up to max. 26 km, varnished	6GK5 991-1AF00-8FA0
SFP991-1LH+	1 x 100 Mbps LC port optical for glass FO cable (single mode) up to max. 70 km	6GK5 991-1AE00-8AA0
SFP991-1ELH200	1 x 100 Mbps LC port optical for glass FO cable (single mode) up to max. 200 km	6GK5 991-1AE30-8AA0

The SFP plug-in transceiver (100 Mbps) cannot be operated in SFP+ slots.

Pluggable transceivers with the supplement (C) in the type name have varnished printed circuit boards (conformal coating).

Note

Restriction for pluggable transceivers

The maximum ambient temperature changes if you use pluggable transceivers.

You can find the corresponding values for the ambient temperature in the section "Technical specifications (Page 97)".

Note

You cannot use the pluggable transceiver SFP (100 Mbps) with the following devices:

- Gigabit versions (suffix "G" in the type designation)
- Devices with combo ports (suffix "C" in the type designation)

Use active pluggable transceivers to connect these devices via optical 100 Mbps connections.

Active plug-in transceiver SFP (100 Mbps)

With active plug-in transceivers, Gigabit slots can be used as Fast Ethernet interfaces.

Type	Property	Article number
SFP991-1A	1 x 100 Mbps, LC port optical for glass FO cable (multimode), up to max. 5 km	6GK5 991-1AD00-8GA0
SFP991-1LD A	1 x 100 Mbps LC port optical for glass FO cable (single mode) up to max. 26 km	6GK5 991-1AF00-8GA0

Note

Restriction for pluggable transceivers

The maximum ambient temperature changes if you use pluggable transceivers.

You can find the corresponding values for the ambient temperature in the section "Technical specifications (Page 97)".

Note

Active plug-in transceivers can be used with the following devices:

- SCALANCE XC206-2G PoE
- SCALANCE XC206-2G PoE (54 V)
- SCALANCE XC206-2G PoE EEC (54 V)
- SCALANCE XC-206-2SFP G
- SCALANCE XC-206-2SFP G EEC
- SCALANCE XC208G PoE
- SCALANCE XC208G PoE (54 V)
- SCALANCE XC216-3G PoE
- SCALANCE XC216-3G PoE (54 V)
- SCALANCE XC-216-4C
- SCALANCE XC-216-4C G
- SCALANCE XC-216-4C G EEC
- SCALANCE XC-224-4C G
- SCALANCE XC-224-4C G EEC

Pluggable transceiver SFP (1000 Mbps)

Type	Property	Article number
SFP992-1	1 x 1000 Mbps, LC port optical for glass FO cable (multimode), up to max. 750 m	6GK5 992-1AL00-8AA0
	10 packing unit (VPE 10)	6GK5 992-1AL00-8AC0
SFP992-1 (C)	1 x 1000 Mbps, LC port optical, for glass FO cable (multimode), up to max. 750 m, varnished	6GK5 992-1AL00-8FA0
SFP992-1+	1 x 1000 Mbps, LC port optical for glass FO cable (multimode), up to max. 2 km	6GK5 992-1AG00-8AA0

Type	Property	Article number
SFP992-1LD	1 x 1000 Mbps LC port optical for glass FO cable (single mode) up to max. 10 km	6GK5 992-1AM00-8AA0
	10 packing unit (VPE 10)	6GK5 992-1AM00-8AC0
SFP992-1LD (C)	1 x 1000 Mbps LC port optical for glass FO cable (single mode) up to max. 10 km, varnished	6GK5 992-1AM00-8FA0
SFP992-1LD+	1 x 1000 Mbps LC port optical for glass FO cable (single mode) up to max. 30 km	6GK5 992-1AM30-8AA0
SFP992-1LH	1 x 1000 Mbps LC port optical for glass FO cable (single mode) up to max. 40 km	6GK5 992-1AN00-8AA0
SFP992-1LH+	1 x 1000 Mbps LC port optical for glass FO cable (single mode) up to max. 70 km	6GK5 992-1AP00-8AA0
SFP992-1ELH	1 x 1000 Mbps LC port optical for glass FO cable (single mode) up to max. 120 km	6GK5 992-1AQ00-8AA0

Pluggable transceivers with the supplement (C) in the type name have varnished printed circuit boards (conformal coating).

Note

Restriction for pluggable transceivers

The maximum ambient temperature changes if you use pluggable transceivers.

You can find the corresponding values for the ambient temperature in the section "Technical specifications (Page 97)".

Bidirectional plug-in transceiver SFP

Bidirectional plug-in transceivers feature only one fiber connection. They transmit and receive on two different wavelengths. To establish a connection, you need two matching bidirectional SFPs. The connected SFPs must respectively transmit on the wavelength at which the connection partner receives.

Type	Properties	Article number
SFP992-1BXMT	1 x 1000 Mbps LC port optical for glass FO (multi-mode) with max. 500 m, transmits at 1550 nm, receives at 1310 nm	6GK5 992-1AL00-8TA0
SFP992-1BXMR	1 x 1000 Mbps LC port optical for glass FO (multi-mode) with max. 500 m, transmits at 1310 nm, receives at 1550 nm	6GK5 992-1AL00-8RA0
SFP992-1BX10T	1 x 1000 Mbps LC port optical for glass FO (single mode) with max. 10 km, transmits at 1550 nm, receives at 1310 nm	6GK5 992-1AM00-8TA0
SFP992-1BX10R	1 x 1000 Mbps LC port optical for glass FO (single mode) with max. 10 km, transmits at 1310 nm, receives at 1550 nm	6GK5 992-1AM00-8RA0

Note

Restriction for pluggable transceivers

The maximum ambient temperature changes if you use pluggable transceivers.

You can find the corresponding values for the ambient temperature in the section "Technical specifications (Page 97)".

SFP+ transceiver

Type	Properties	Article number
SFP993-1	1 x 10 Gbps, LC port optical for glass FO cable (multimode), up to max. 550 m	6GK5 993-1AT00-8AA0
SFP993-1LD	1 x 10 Gbps, LC port optical for glass FO cable (single mode), up to max. 10 km	6GK5 993-1AU00-8AA0

Can only be operated in SFP+ slots.

Note

Restriction for pluggable transceivers

The maximum ambient temperature changes if you use pluggable transceivers.

You can find the corresponding values for the ambient temperature in the section "Technical specifications (Page 97)".

Preassembled IE cable with SFP+ plugs

Component	Description		Article number
IE Cable SFP+/SFP+	Preassembled IE cable with two permanently mounted SFP+ plugs, electrical, 10 Gbps, pack of 1	Length 1 m	6GK5 980-3CB00-0AA1
		Length 2 m	6GK5 980-3CB00-0AA2

4.4 SELECT / SET button

Position

The "SELECT/SET" button is located on the front of the device.

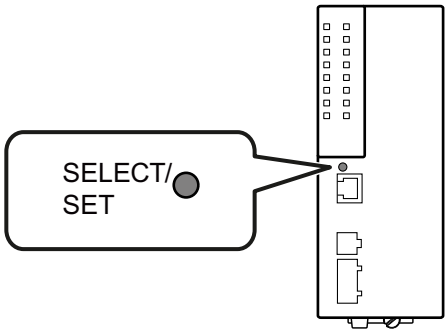

Figure 4-1 Position of the "SELECT/SET" button, for example on the SCALANCE XC-200 with 8 ports

Setting the display mode

To set the required display mode, press the "SELECT/SET" button.

For more detailed information on the display modes, refer to the section "LEDs "DM1" and "DM2" (Page 46)".

Resetting the device to factory defaults

NOTICE
Previous settings If you reset, all the settings you have made will be overwritten by factory defaults.

NOTICE
Inadvertent reset An inadvertent reset can cause disturbances and failures in the configured network.

Requirement

- The device is in operation.
- The function "Reset to Factory Defaults" is enabled for the "SELECT / SET" button.

Note

Reset despite disabled "SELECT/SET" button

If you have disabled the "Restore Factory Defaults" function for the "SELECT/SET" button in the configuration, this does not apply during the startup phase, see section "Restoring the factory settings (Page 96)".

If the function has been disabled in the configuration, it is only disabled on completion of the startup phase.

Procedure

To reset the device to the factory defaults during operation, follow the steps below:

1. Switch to display mode A.
   Display mode A is active if the LEDS "DM1" and "DM2" are unlit.
   If the "DM1" and "DM2" LEDs are lit or flashing, you will need to press the "SET/SELECT" repeatedly until the "DM1" and "DM2" LEDs go off.
   If you do not press the "SELECT/SET" button for longer than 1 minute, the device automatically changes to display mode A.
2. Hold down the "SELECT/SET" button for 12 seconds.
   After 9 seconds,the "DM1" and "DM2" LEDs start to flash for 3 seconds. At the same time, the port LEDs go on one after the other.
   After you have held down the button for 12 seconds, the device restarts and the factory defaults are restored.
   If you release the button before the 12 seconds have elapsed, the reset is canceled.

Enabling and disabling the functions of the button

In the configuration, you can enable or disable the functions of the button.

Defining the fault mask

Using the fault mask, you specify an individual "good status" for the connected ports and the power supply. Deviations from this status are displayed as errors/faults.

You configure newly plugged-in connections in the configuration.

To define the fault mask, follow the steps below:

1. Switch to display mode D.
   Display mode D is active if the "DM1" and "DM2" LEDs are lit green..
   If another display mode is active, you will need to press the "SET/SELECT" button repeatedly until the "DM1" and "DM2" LEDs are lit green.
2. Hold down the "SELECT/SET" button for 5 seconds.
   After 2 seconds,the "DM1" and "DM2" LEDs start to flash for 3 seconds. At the same time, the port LEDs go on one after the other.
   After you have held down the button for 5 seconds, the current settings are stored as the "good status".
   If you release the button before the 5 seconds have elapsed, the previous fault mask will be retained.

4.5 LED display

4.5.1 Overview

The following figure shows the arrangement of the LEDs based on the example of a SCALANCE XC-200 with 8 ports.

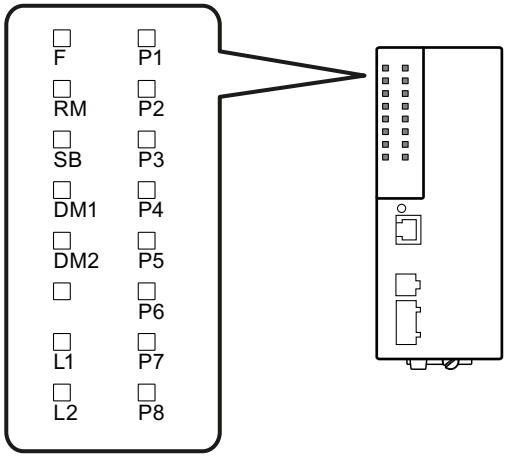

F	LED for displaying the fault/error status
RM	LED for displaying the "redundancy manager" function
SB	LED for displaying the "standby" function
DM1/DM2	LEDs for displaying the display mode
L1/L2	LEDs for displaying the power supply
P	LEDs for displaying the port status *)
COMBO	Indicates that the LEDs belong to combo ports

*) The number of port LEDs depends on the device.

4.5.2 "RM" LED

The "RM" LED indicates whether the device has the Media Redundancy Manager (MRM) role and whether the MRP ring is operating error-free.

LED color	LED status	Meaning
-	Off	The device is not an MRM.
Green	On	The device has the MRM role. The MRP ring is in normal state. The MRM has blocked data traffic on one of its ring ports and is monitoring the MRP ring.
Green	Flashing	The device has the MRM role. The MRP ring is in error state. The MRM has detected an error in the MRP ring or at one of its ring ports and activates an alternative communication path.

4.5.3 "SB" LED

The "SB" LED shows the status of the standby function.

LED color	LED status	Meaning
-	Off	The standby function is disabled.
Green	On	The standby function is enabled. The standby section is passive.
Green	Flashing	The standby function is enabled. The standby section is active.

4.5.4 "F" LED

The "F" LED shows the fault/error status of the device.

Meaning during device startup

LED color	LED status	Meaning during device startup
-	Off	Device startup was completed successfully.
Red	On	Device startup is not yet completed or errors have occurred.
Red	Flashing	There are errors in the firmware.

Meaning during operation

LED color	LED status	Meaning during operation
-	Off	The device is operating free of errors. The signaling contact is closed.
Red	On	The device has detected a problem. The signaling contact has opened.
Red	Flashing	The device is starting up for the first time or has been reset to factory settings. The password of the default user "admin" has not yet been changed.

4.5.5 LEDs "DM1" and "DM2"

The "DM1" and "DM2" LEDs indicate which display mode is set.

There are 5 display modes (A, B, C, D, and E). Display mode A is the default mode.

Depending on the set display mode, the "L1", "L2" LEDs and the port LEDs show different information.

LED color	LED status		Meaning
	DM1 LED	DM2 LED	
-	Off		Display mode A
Green	On	Off	Display mode B
Green	Off	On	Display mode C
Green	On		Display mode D
Green	Flashing	Off	Display mode E

Setting the display mode

To set the required display mode, press the "SELECT/SET" button.

If you do not press the "SELECT/SET" button for longer than 1 minute, the device automatically changes to display mode A.

Pressing SELECT/SET button starting at display mode A	LED status		Display mode
	DM1	DM2	
-	Off		Display mode A
Press once	On	Off	Display mode B
Press twice	Off	On	Display mode C
Press three times	On		Display mode D
Press four times	Flashing	Off	Display mode E

4.5.6 LEDs "L1" and "L2"

The "L1" and "L2" LEDs indicate the current range of the power supply at connectors L1 and L2.

The meaning of the "L1" and "L2" LEDs depends on the set display mode, see section "LEDs "DM1" and "DM2" (Page 46)".

Meaning in display modes A, B, C and E

In the display modes A, B, C and E, you can determine whether the power supply is connected by observing LEDs "L1" and "L2" .

L1/L2 LED		L1/L2 connector
LED color	LED status	
-	Off	No external power supply connected
Green	On	Power supply connected to L1/L2

Meaning in display mode D

In display mode D, the "L1" and "L2" LEDs indicate whether the power supply is monitored.

L1/L2 LED		L1/L2 connector
LED color	**LED status**	
-	Off	Power supply is not monitored. The signal contact does not respond if neither L1 nor L2 is connected to an adequate power supply.
Green	On	Power supply is monitored. The signal contact responds if neither L1 nor L2 is connected to an adequate power supply.

4.5.7 Port LEDs

The port LEDs "P1", "P2" etc. show information about the corresponding ports.

The meaning of the Port LEDs depends on the set display mode, see section "LEDs "DM1" and "DM2" (Page 46)".

Meaning in display mode A

In display mode A, the port LEDs indicate whether a valid link exists.

LED color	LED status	Meaning
-	Off	No valid link to the port (for example communications partner turned off or cable not connected).
Green	On	Link exists and port in normal status. In this status, the port can receive and send data.
	Flashes once per period*	Link exists and port in "Blocking" status. In this status, the port only receives management data (no user data).
	Flashes three times per period*	Link exists and port turned off by management. In this status, no data is sent or received via the port.
	Flashes four times per period*	Link exists and is in the "Monitor Port" status. In this status, the data traffic of another port is mirrored to this port.
Yellow	Flashing / lit	Receiving data at port

* 1 period ≙ 2.5 seconds

Meaning in display mode B

In display mode B, the port LEDs indicate the transmission speed.

LED color	LED status	Meaning
-	Off	Port operating at 10 Mbps
Green	On	Port operating at 100 Mbps
Orange	On	Port operating at 1000 Mbps
Green	Flashing	Port operating at 10 Gbps

If there is a connection problem and the type of transmission is fixed (auto negotiation off), the desired status, in other words the set transmission speed (10 Gbps, 1000 Mbps,

100 Mbps, 10 Mbps) continues to be displayed. If there is a connection problem and auto negotiation is active, the port LED goes off.

Meaning in display mode C

In display mode C, the port LEDs indicate the mode.

LED color	LED status	Meaning
-	Off	Port operating in half duplex mode
Green	On	Port operating in full duplex mode

Meaning in display mode D

In display mode D, the port LEDs indicate whether the port is monitored.

LED color	LED status	Meaning
-	Off	Port is not monitored. If no link was established at the port the signaling contact does not indicate an error.
Green	On	Port is monitored. If no link was established at the port the signaling contact indicates an error.

Meaning in display mode E

In display mode E, the port LEDs indicate whether the connected device is supplied using PoE.

LED color	LED status	Meaning
-	Off	The connected device is not supplied using PoE.
Green	On	The connected device is supplied via PoE.

4.6 C-PLUG

4.6.1 Function of the C-PLUG

NOTICE
Do not remove or insert a C-PLUG during operation A C-PLUG may only be removed or inserted when the device is turned off.

A C-PLUG is an exchangeable storage medium for storing the configuration data of the device. This allows fast and uncomplicated replacement of a device. The C-PLUG is taken from the previous device and inserted in the new device. The first time it is started up, the replacement device has the same configuration as the previous device except for the device-specific MAC address set by the vendor. A C-PLUG stores the current information about the configuration of a device.

A C-PLUG can be used to save the firmware. You will find more information under "System > PLUG".

Note

The device can also be operated without a C-PLUG.

How it works

Operating mode

In terms of the C-PLUG, there are three modes for the device:

- Without C-PLUG
  The device stores the configuration in internal memory.
  This mode is active if no C-PLUG is inserted.
- With unwritten C-PLUG
  If an unwritten C-PLUG (factory status or deleted with Clean function) is used, the local configuration already existing on the device is automatically stored on the inserted C-PLUG during startup.
  This mode is active as soon as an unwritten C-PLUG is inserted.
- With written C-PLUG
  A device with a written and accepted C-PLUG uses the configuration data of the C-PLUG automatically when it starts up. The requirement for acceptance is that the data was written by a compatible device type.
  If there is configuration data in the internal memory of the device this is overwritten.
  This mode is active as soon as a written C-PLUG is inserted.

Operation with C-PLUG

The configuration stored on the C-PLUG is displayed over the user interfaces.

If changes are made to the configuration, the device stores the configuration directly on the C-PLUG, if this is in the "ACCEPTED" status and in internal memory.

Response to errors

Inserting a C-PLUG that does not contain the configuration of a compatible device type and inadvertently removing the C-PLUG, or general malfunctions of the C-PLUG are indicated by the diagnostic mechanisms of the device.

- Fault LED
- Web Based Management (WBM)
- SNMP
- Command Line Interface (CLI)
- PROFINET diagnostics

The user then has the choice of either removing the C-PLUG again or selecting the option to reformat the C-PLUG.

4.6.2 Position of the C-PLUG

Position of the C-PLUG

The C-PLUG slot is on the top of the device housing.

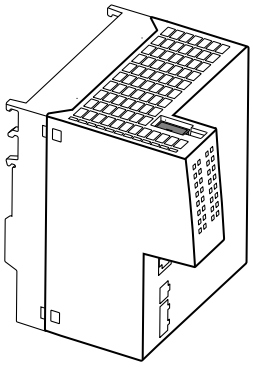

The procedure for pulling and plugging the PLUG can be found in the section "Replacing a C-PLUG (Page 90)".

4.7 Combo ports

Characteristics

Combo port is the name for two communication ports. A combo port has the two following jacks:

- a fixed RJ-45 port
- an SFP transceiver slot that can be equipped individually

Of these two ports, only one can ever be active. Using the mode, you can decide how the ports are prioritized.

The port name is the same on both jacks of the combo port, for example "PxC".

There is an LED for each combo port. The LEDs for the combo ports can be identified by a vertical line and the word "COMBO". The labeling of the combo port LEDs does not differ from that of the other LEDs, e.g. "P3".

Setting the mode

The following modes can be configured for a combo port:

- Mode 1: **auto**
  The SFP transceiver port has priority. As soon as an SFP transceiver is plugged in, an existing connection at the fixed RJ-45 port is terminated. If no SFC transceiver is plugged in, a connection can be established via the fixed RJ-45 port.
- Mode 2: **rj45**
  The fixed RJ-45 port is independent of the SFP transceiver port.
- Mode 3: **sfp**
  The pluggable transceiver port is used independent of the fixed RJ-45 port.

The factory setting for the combo ports is mode 1: auto

You configure the mode with Web Based Management or the Command Line Interface.

4.8 Power over Ethernet (PoE)

Function

The "Power over Ethernet" function supplies connected devices with power via the Ethernet cable. Devices supplied with power via an Ethernet cable do not require a separate voltage source.

PoE-compliant devices can be divided into the following groups:

- Power source (PSE - Power Sourcing Equipment)
  These inject power onto the Ethernet cable.
- Power consumer (PD - Powered Device)
  These are supplied with power via the Ethernet cable.

4.8.1 Power and voltage range according to the standard

Note the values specified for the power of the power source, so that the power supply is ensured at the power consumers according to the standard.

PoE class	Power supplied by the power source	Available power at the powered device	Type	Standard	Designation
0	15.4 W	12.95 W	1	IEEE802.3af	PoE
1	4	3.84 W			
2	7	6.49 W			
3	15.4 W	12.95 W			
4	30	25.5 W	2	IEEE802.3at	PoE+

PoE class	Power supplied by the power source	Available power at the powered device	Type	Standard	Designation
5	45	40 W	3	IEEE802.3bt	4-pair PoE
6	60	51 W			
7	75	62 W	4		
8	90	73 W			

4.8.2 PoE properties of the devices

Note

Turn off the power source before you disconnect the PoE cable of a power consumer.

Power source

- The device can supply energy consumers of the standards IEEE802.af Type 1, IEEE802.at Type 2 or IEEE802.3bt Type 3.
- In total, a power source can make the following PoE power available (incl. line losses):
  - PoE variants with 24 V DC: 120 W
  - SCALANCE XC206-2G PoE with 54 V DC: 240 W
  - SCALANCE XC216-3G PoE with 54 V DC: 300 W

  The power can be distributed to the ports as desired.
  Note that the PoE power is reduced for installation positions other than horizontal; see sections "Technical specifications (Page 97)" and "Types of installation (Page 59)".

PoE ports

- The PoE ports are not isolated from each other. This means that they meet the conditions named in Environment A (IEEE 802.3): Power supply over Ethernet within a power supply system.
- The electrical isolation of the ports from functional grounding is designed for 1500 Vrms (1 minute) (according to Section 5.2.2 of IEC 60950-1:2001).

- The following ports support PoE classes 0 to 4:

Device	Port
SCALANCE XC206-2G PoE SCALANCE XC206-2G PoE (54 V) SCALANCE XC206-2G PoE EEC (54 V)	Port 1 to port 4
SCALANCE XC208G PoE SCALANCE XC208G PoE (54 V)	Port 3 to port 6
SCALANCE XC216-3G PoE SCALANCE XC216-3G PoE (54 V)	Port 8 to port 19

The ports supply connected devices with up to 30 W per port (according to IEEE802.3af and IEEE802.3at).

- The following ports support PoE classes 0 to 6:

Device	Port
SCALANCE XC206-2G PoE SCALANCE XC206-2G PoE (54 V) SCALANCE XC206-2G PoE EEC (54 V)	Port 5 and port 6
SCALANCE XC208G PoE SCALANCE XC208G PoE (54 V)	Port 7 and port 8
SCALANCE XC216-3G PoE SCALANCE XC216-3G PoE (54 V)	Port 6 and port 7

They supply connected devices with up to 60 W per port (according to IEEE802.3af, IEEE802.3at and IEEE802.3bt).

4.8.3 Power transfer and pin assignment (30 W)

The table below shows the most important power transfer and pin assignment of the following ports:

Device	Port
SCALANCE XC206-2G PoE SCALANCE XC206-2G PoE (54 V) SCALANCE XC206-2G PoE EEC (54 V)	Port 1 to port 4
SCALANCE XC208G PoE SCALANCE XC208G PoE (54 V)	Port 3 to port 6
SCALANCE XC216-3G PoE SCALANCE XC216-3G PoE (54 V)	Port 8 to port 19

Pin number	Assignment
Pin 1	Positive power supply
Pin 2	Positive power supply
Pin 3	Negative power supply
Pin 4	-

Pin 5	-
Pin 6	Negative power supply
Pin 7	-
Pin 8	-

4.8.4 Power transfer and pin assignment (60 W)

The table below shows the most important power transfer and pin assignment of the following ports:

Device	Port
SCALANCE XC206-2G PoE SCALANCE XC206-2G PoE (54 V) SCALANCE XC206-2G PoE EEC (54 V)	Port 5 and port 6
SCALANCE XC208G PoE SCALANCE XC208G PoE (54 V)	Port 7 and port 8
SCALANCE XC216-3G PoE SCALANCE XC216-3G PoE (54 V)	Port 6 and port 7

Pin number	Assignment
Pin 1	Positive power supply
Pin 2	Positive power supply
Pin 3	Negative power supply
Pin 4	Positive power supply
Pin 5	Positive power supply
Pin 6	Negative power supply
Pin 7	Negative power supply
Pin 8	Negative power supply

4.8.5 Configuration

How you activate and configure PoE is described in the configuration manuals, see section "Introduction", section "Documentation on configuration".

Installing and removing

5

5.1 Safety notices for installation

Safety notices

When installing the device, keep to the safety notices listed below.

WARNING

If a device is operated in an ambient temperature of more than 55 °C, the temperature of the device enclosure may be higher than 70 °C. The device must therefore be installed so that it is only accessible to service personnel or users that are aware of the reason for restricted access and of the required safety measures at an ambient temperature higher than 55 to 70 °C.

WARNING

If the device is installed in a cabinet, the inner temperature of the cabinet corresponds to the ambient temperature of the device.

WARNING

If the cable or conduit entry point exceeds 70 °C or the branching point of conductors exceeds 80 °C, special precautions must be taken. If the equipment is operated in an air ambient in excess of 60 °C, only use cables with admitted maximum operating temperature of at least 80 °C.

NOTICE

Improper mounting

Improper mounting may damage the device or impair its operation.

- Before mounting the device, always ensure that there is no visible damage to the device.
- Mount the device using suitable tools. Observe the information in the respective section about mounting.

Safety notices on use in hazardous areas

General safety notices relating to protection against explosion

WARNING

EXPLOSION HAZARD

Replacing components may impair suitability for Class 1, Division 2 or Zone 2.

WARNING

The device is intended for indoor use only.

WARNING

The device shall only be used in an area with pollution degree 1 or 2 (according to EN/IEC 60664-1, GB/T 16935.1).

WARNING

When used in hazardous environments corresponding to Class I, Division 2 or Class I, Zone 2, the device must be installed in a cabinet or a suitable enclosure.

Notes for use in hazardous locations according to ATEX, IECEx, UKEX and CCC Ex

If you use the device under ATEX, IECEx, UKEX or CCC Ex conditions you must also keep to the following safety instructions in addition to the general safety instructions for protection against explosion:

WARNING

To comply with EU Directive 2014/34 EU (ATEX 114), UK Regulation SI 2016/1107 or the conditions of IECEx or CCC-Ex, the housing or cabinet must meet the requirements of at least IP54 (according to EN/IEC 60529, GB/T 4208) in compliance with EN IEC/IEC 60079-7, GB/T 3836.3.

WARNING

If the temperature of the cable or housing socket exceeds 60 °C or the temperature at the branching point of the cables exceeds 80 °C, special precautions must be taken. If the equipment is operated in an air ambient in excess of 60 °C, only use cables with admitted maximum operating temperature of at least 80 °C.

Safety notices when using according to FM

If you use the device under FM conditions you must also keep to the following safety notices in addition to the general safety notices for protection against explosion:

WARNING

EXPLOSION HAZARD

For operation the device is intended to be installed within an enclosure/control cabinet. The inner temperature of the enclosure/control cabinet corresponds to the ambient temperature of the device. Use installation wiring connections with admitted maximum operating temperature of at least 30 °C higher than maximum ambient temperature.

The following instructions for wall mounting apply only to devices with a mounting latch:

WARNING

Wall mounting outside of the control cabinet or housing does not fulfill the requirements of the FM approval.

WARNING

Wall mounting is only permitted if the requirements for the housing, the installation regulations, the clearance and separating regulations for the control cabinets or housings are adhered to. The control cabinet cover or housing must be secured so that it can only be opened with a tool. An appropriate strain-relief assembly for the cable must be used.

Safety notices when using the device as industrial control equipment according to UL 61010-2-201

If you use the device under UL 61010-2-201 conditions you must also keep to the following safety notices in addition to the general safety notices for protection against explosion:

WARNING

Open equipment

The devices are "open equipment" according to the standard IEC 61010-2-201 or UL 61010-2-201 / CSA C22.2 No. 61010-2-201. To fulfill requirements for safe operation with regard to mechanical stability, flame retardation, stability, and protection against contact, the following alternative types of installation are specified:

- Installation in a suitable cabinet.
- Installation in a suitable enclosure.
- Installation in a suitably equipped, enclosed control room.

WARNING

If the temperature at the cable or housing socket or at the branching points of the cables exceeds 60 °C, special precautions must be taken. If the equipment is operated at ambient temperatures in excess of 40 °C, only use cables with permitted operating temperature of at least 80 °C.

Further notes

NOTICE

Warming and premature aging of the network component due to direct sunlight

Direct sunlight can heat up the device and can lead to premature aging of the network component and its cabling.

Provide suitable shade to protect the network component against direct sunlight.

5.2 General notes for SFP transceivers

WARNING

Use only approved plug-in transceivers

If you use plug-in transceivers that have not been approved by Siemens AG, there is no guarantee that the device will function according to its specifications.
If you use unapproved plug-in transceivers, this can lead to the following problems:

- Damage to the device
- Loss of the approvals
- Violation of the EMC regulations

Use only approved plug-in transceivers.

Note

Plugging and pulling during operation

You can plug and pull plug-in transceivers with the device in operation.

Note

LASER Class 1

All plug-in transceivers you use in the devices must comply with LASER Class I according to IEC/EN 60825-1. All plug-in transceivers from Siemens AG comply with LASER Class I according to IEC/EN 60825-1.

Documentation for plug-in transceivers

You will find detailed information in the operating instructions of the plug-in transceivers, see the chapter "Introduction (Page 7)" section "Additional documentation".

5.3 Types of installation

Note

Devices with or without fastening plate

During installation, check whether the device has a fastening plate or not. Refer to section "Device views (Page 27)" to learn which devices have a fastening plate.

All SCALANCE XC-200 devices allow the following mounting methods:

- DIN rail
- S7-300 mounting rail
- S7-1500 mounting rail

Only devices with a fastening plate additionally permit the following mounting type:

- Wall mounting

5.4 Installation clearance

Keep to the following minimum clearances so that the convection ventilation of the device is not blocked:

- Below at least 10 cm
- Above at least 10 cm

If you install the device with installation distances < 10 cm, you must observe the following:

- The minimum distance must not be less than 30 mm.
- The maximum permissible ambient temperature in the direct vicinity of the device must be observed.
- Sufficient convection ventilation of the device must be ensured.

5.5 Installation position

The following installation position is recommended:

Horizontal Horizontal installation of the rack (DIN rail)	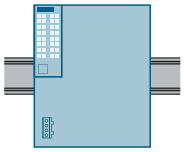

Note that different values for temperature and PoE power may apply to installation positions other than horizontal; see section "Technical specifications (Page 97)".

5.6 Installation on a DIN rail

5.6.1 Top-hat rail mounting with fastening plate

Installation

Note

Note the position of the securing bar, see also section “Dimension drawings (Page 155)“.

When supplied, the securing bar is in the wall mounting position. To change the position of the securing bar, refer to the section “Changing the position of the securing bar (Page 68)“.

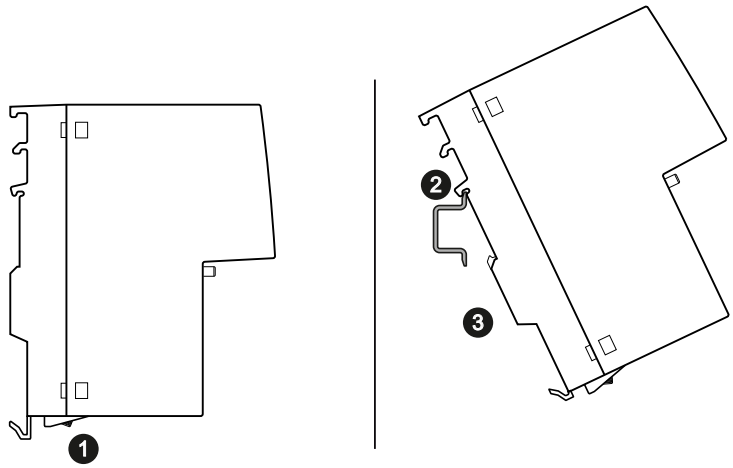

Figure 5-1 DIN rail mounting with securing bar in the wall mounting position.

Securing bar in the wall mounting position (as supplied).

To install the device on a 35 mm DIN rail complying with DIN EN 60715, follow the steps below:

1. Loosen the knurled screw with your hand or a screwdriver.
2. Place the third housing guide of the device on the top edge of the DIN rail.
3. Press the device down against the DIN rail until the spring securing bar locks in place.
4. When you tighten the knurled screw. you cannot release the securing bar (torque 0.5 Nm). The device is additionally fixed.
5. Connect the electrical connecting cables, refer to the section "Connecting (Page 71)".

Removal

To remove the device from a DIN rail, follow the steps below:

1. Disconnect all connected cables.
2. If necessary, loosen the knurled screw with your hand or a screwdriver.
3. Lever the securing bar down using a screwdriver as far as it will go.
4. Pull the device away from the bottom of the DIN rail with the bar pulled.

5.6.2 Top-hat rail mounting without fastening plate

Installation

WARNING

Danger of injury by falling objects

The 35 mm DIN rail does not provide adequate support in shipping or when there is severe vibration (> 10 g). When used under these conditions, the device can detach itself and may cause injury to persons.
When used in shipbuilding or when extreme vibration can be expected, mount the device on a S7 standard rail.

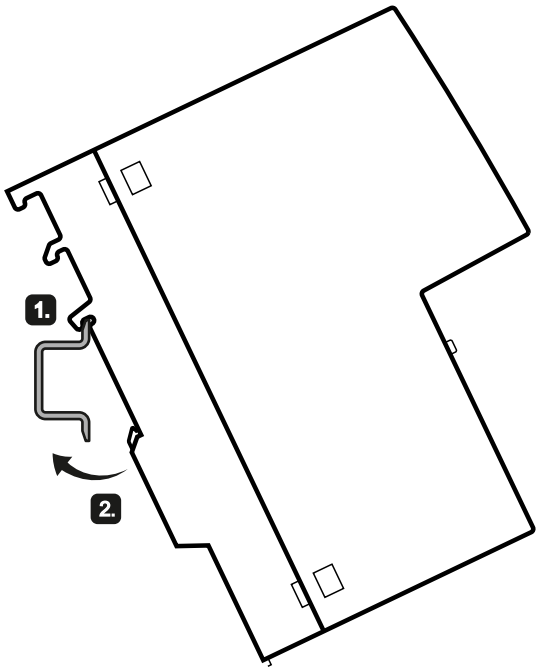

Figure 5-2 DIN rail mounting

To install the device on a 35 mm DIN rail complying with DIN EN 60715, follow the steps below:

1. Place the third housing guide of the device on the top edge of the DIN rail ①.
2. Press the device down against the DIN rail until the spring catch locks in place ②.
3. Connect the electrical connecting cables; refer to the section "Connecting (Page 71)".

Removal

To remove the device from a DIN rail, follow the steps below:

1. Disconnect all connected cables.
2. Release the DIN rail catch on the bottom of the device using a screwdriver.
3. Pull lower part of the device away from the DIN rail.

5.7 Installation on a standard S7-300 rail

5.7.1 Installation on a standard rail S7-300 with fastening plate

Installing on an S7-300 standard rail

Note

Note the position of the securing bar, see also section “Dimension drawings (Page 155)“.

When supplied, the securing bar is in the wall mounting position. To change the position of the securing bar, refer to the section “Changing the position of the securing bar (Page 68)“.

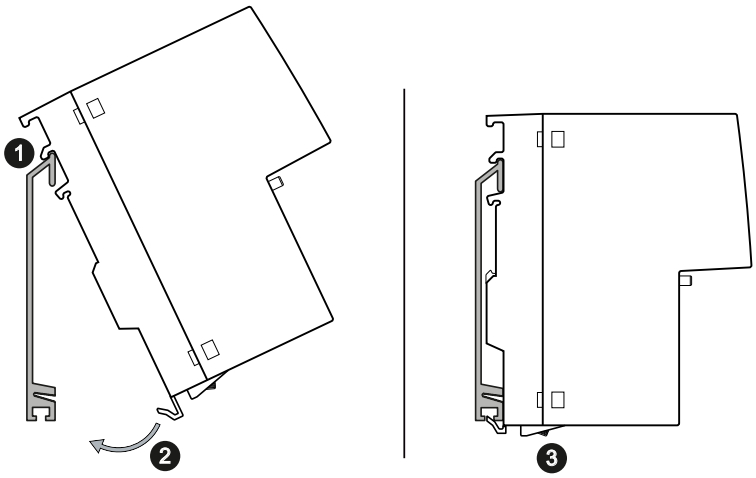

Figure 5-3 S7-300 mounting rail installation with the securing bar in the wall mounting position.

Securing bar in the wall mounting position (as supplied).

To install the device on an S7-300 standard rail, follow the steps below:

1. Place the second housing guide of the device on the top edge of the standard rail.
2. Swing the device down towards the back against the mounting rail.
3. Loosen the knurled screw with your hand or a screwdriver. The spring mounted securing bar locks in place.
4. When you tighten the knurled screw. you cannot release the securing bar (torque 0.5 Nm). The device is additionally fixed.
5. Connect the electrical connecting cables, refer to the section "Connecting (Page 71)".

Removal

To remove the device from a standard rail, follow the steps below:

1. Disconnect all connected cables.
2. If necessary, loosen the knurled screw with your hand or a screwdriver.
3. Lever the securing bar down using a screwdriver as far as it will go.
4. Remove the device from the mounting rail with the bar pulled.

5.7.2 Installation on a standard rail S7-300 without fastening plate

Installing on an S7-300 standard rail

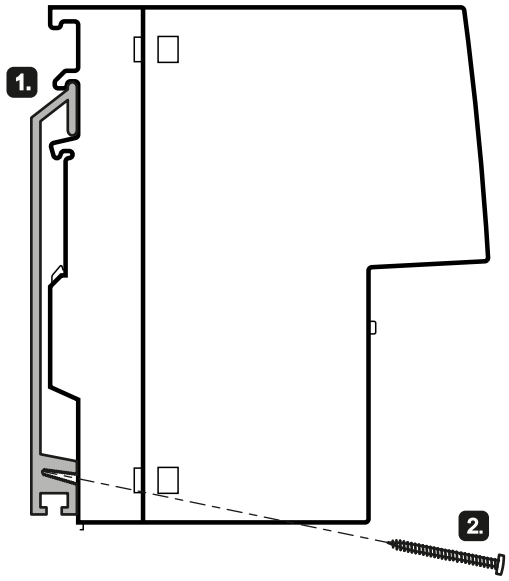

Figure 5-4 S7-300 standard rail mounting

To screw the device to an S7-300 standard rail, you require a securing screw with the following properties:

- Self-tapping screw 4 x 45 mm
- Screw head diameter: max. 7 mm

To install the device on an S7-300 standard rail, follow the steps below:

1. Place the second housing guide of the device on the top edge of the standard rail ①.
2. Screw the device to the lower part of the standard rail with the supplied securing screw ② (tightening torque 1.5 Nm), see also "Device views (Page 27)".
3. Connect the electrical connecting cables; refer to the section "Connecting (Page 71)".

Removal

To remove the device from a standard rail, follow the steps below:

1. Disconnect all connected cables.
2. Release the screw on the underside of the standard rail.
3. Remove the device from the standard rail.

5.8 Installation on a standard rail S7-1500

5.8.1 Installation on a standard rail S7-1500 with fastening plate

Installing on an S7-1500 standard rail

Note

Note the position of the securing bar, see also section “Dimension drawings (Page 155)“.

When supplied, the securing bar is in the wall mounting position. To change the position of the securing bar, refer to the section “Changing the position of the securing bar (Page 68)“.

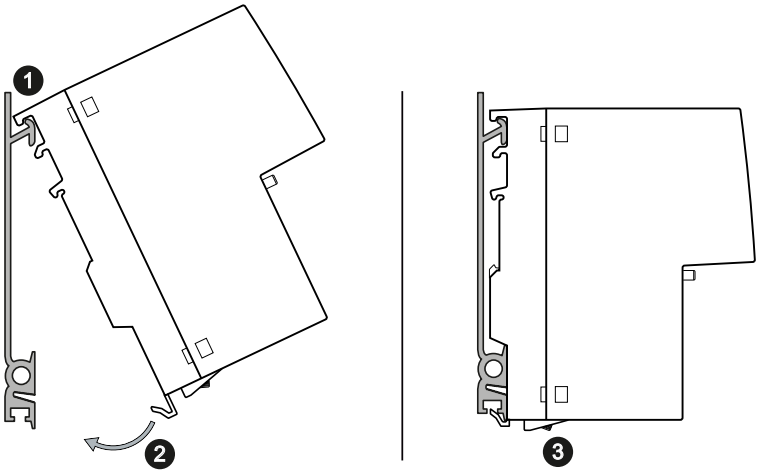

Figure 5-5 S7-1500 mounting rail installation with the securing bar in the wall mounting position.

Securing bar in the wall mounting position (as supplied).

To install the device on an S7-1500 standard rail, follow the steps below:

1. Place the first housing guide of the device on the top edge of the standard rail.
2. Swing the device down towards the back against the mounting rail.
3. Loosen the knurled screw with your hand or a screwdriver. The spring mounted securing bar locks in place.
4. When you tighten the knurled screw. you cannot release the securing bar (torque 0.5 Nm). The device is additionally fixed.
5. Connect the electrical connecting cables, refer to the section "Connecting (Page 71)".

Removal

To remove the device from a standard rail, follow the steps below:

1. Disconnect all connected cables.
2. If necessary, loosen the knurled screw with your hand or a screwdriver.
3. Lever the securing bar down using a screwdriver as far as it will go.
4. Remove the device from the mounting rail with the bar pulled.

5.8.2 Installation on a standard rail S7-1500 without fastening plate

Installing on an S7-1500 standard rail

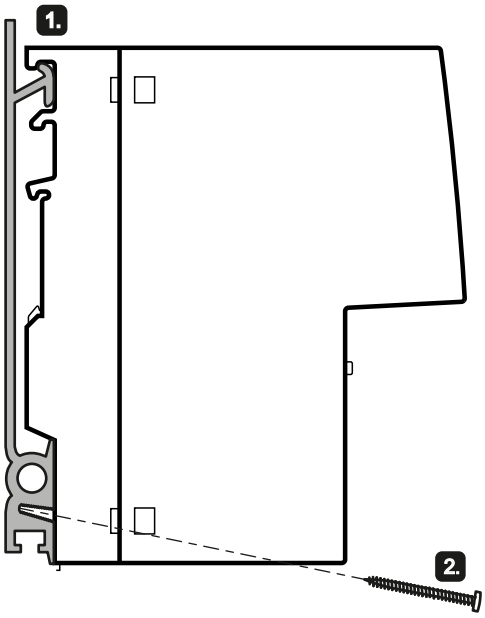

Figure 5-6 S7-1500 standard rail mounting

To screw the device to an S7-1500 standard rail, you require a securing screw with the following properties:

- Self-tapping screw 4 x 45 mm
- Screw head diameter: max. 7 mm

To install the device on an S7-1500 standard rail, follow the steps below:

1. Place the first housing guide of the device on the top edge of the standard rail ①.
2. Screw the device to the lower part of the standard rail with the supplied securing screw ② (tightening torque 1.5 Nm), see also "Device views (Page 27)".
3. Connect the electrical connecting cables; refer to the section "Connecting (Page 71)".

Removal

To remove the device from a standard rail, follow the steps below:

1. Disconnect all connected cables.
2. Release the screw on the underside of the standard rail.
3. Remove the device from the standard rail.

5.9 Wall mounting with fastening plate

Preparation

Note the position of the securing bar, see also section “Dimension drawings (Page 155)”.

When supplied, the securing bar is in the wall mounting position. You do not need to prepare the device any further.

If the securing bar is in the rail mounting position, note the section “Changing the position of the securing bar (Page 68)”.

Tools

To mount the device on a wall, you require the following:

- 2 wall plugs with a diameter of 6 mm and a minimum length of 35 mm.
- 2 oval-head screws with a diameter of 3.5 mm to 4 mm and a minimum length of 50 mm.

Note

Use suitable fitting material depending on the mounting surface.

Mounting on a concrete wall

The following table shows the size of the drill hole and the required fastening material using a concrete drill hole as an example:

Base	Concrete	
Drill hole	Depth	Min. 45 mm
	Diameter	6 mm
Fastening material	Plugs	6 x 35
	Oval-head screws	4 x 50

Assembly

Note

The wall mounting must be capable of supporting at least four times the weight of the device.

To mount the device on a wall, follow the steps below:

1. Prepare the wall mounting with drilled holes and plugs. For the precise dimensions, refer to the section "Dimension drawings (Page 155)".
2. Turn the upper screw in to the wall so that 10 mm remains jutting out.
3. Hang the device with the keyhole hanging mechanism on the rear on the screw.
4. Fix the device to the wall with the lower screw.
5. Connect the electrical connecting cables, refer to the section "Connecting (Page 71)".

5.10 Changing the position of the securing bar

Rail mounting position - wall mounting position

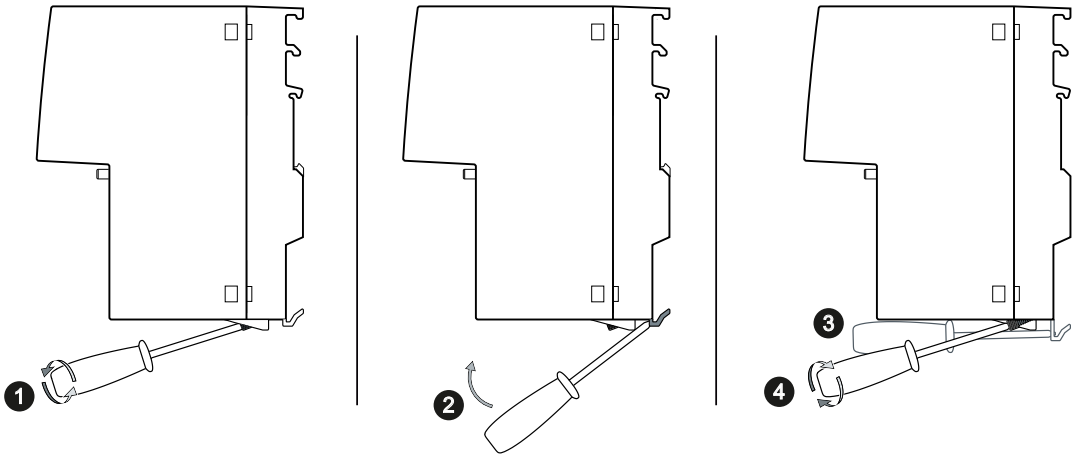

To change the securing bar from the rail mounting position to the wall mounting position follow the steps below:

1. If necessary, loosen the knurled screw with your hand or a screwdriver.
2. Move the securing bar down as far as it will go.
   – Use the levering aid and level the securing bar down using a screwdriver into this position.
   – Push the securing bar down using your hand.
3. Hold the securing bar in this position.
   – Hold the securing bar with the screwdriver.
   – Use the gap on the rear of the device and fix the securing bar briefly with a pin.
4. Tighten the knurled screw (torque 0.5 Nm).
   The securing bar is fixed in the wall mounting position.
5. Remove the pin.

Wall mounting position - rail mounting position

To move the securing bar from the wall mounting position to the rail mounting position, loosen the knurled screw.

5.11 Disassembly

WARNING

Improper disassembly

Improper disassembly may result in a risk of explosion in hazardous areas.

For proper disassembly, observe the following:

- Before starting work, ensure that the electricity is switched off.
- Secure remaining connections so that no damage can occur as a result of disassembly if the system is accidentally started up.

Connecting

6

6.1 Safety notices for devices without PoE

Operate the device with a power supply according to NEC Class 2. When connecting up the device, keep to the safety notices listed below.

For devices that must be operated with a NEC Class 2 power supply, you can also connect a fuse in front of the power supply that meets the following requirements. The power supply must then meet the requirements for operation with Limited Energy/LPS, see "Safety notices for PoE devices (Page 74)".

Note

The power supply must be connected by the operator/user in line with the national installation regulations.

Only use power supplies with the same approvals as the device to be connected. The approvals for the power supply and the device must correspond to the requirements of the end application.

WARNING

Power supply

The device is designed for operation with a directly connectable safety extra low voltage (SELV) from a limited power source (LPS).

The power supply that is connected to the supply connections therefore needs to meet at least one of the following conditions:

- Safety extra low voltage (SELV) with limited power source (LPS) complying with UL 60950-1 / IEC 60950-1 / EN 60950-1
  or
- Safety extra low voltage (SELV) with limited power source (LPS) complying with UL 62368-1 / IEC 62368-1 / EN IEC 62368-1
  or
- NEC Class 2 according to the National Electrical Code (r) (ANSI / NFPA 70)

If the device is connected to a redundant power supply (two separate power supplies), the combination of the two power supplies must meet these requirements.

WARNING

Power supply

The device is designed for operation with safety extra low voltage (SELV) by a limited power source (LPS).

The power supply that is connected to the supply connections therefore needs to meet at least one of the following conditions:

- Limited energy according to UL 508
  or
- Limited energy according to UL 61010-1 / IEC 61010-1 / EN IEC 61010-1
  or
- NEC Class 2 according to the National Electrical Code (r) (ANSI / NFPA 70)

If the device is connected to a redundant power supply (two separate power supplies), the combination of the two power supplies must meet these requirements.

WARNING

Safety extra low voltage

The device is designed for operation with a directly connectable power supply whose output power corresponds to "Limited Energy" according to UL/IEC 61010-1.

Notes on operation with PELV (protective extra-low voltage)

You can operate the device with PELV. When connecting the device, observe the safety information provided below.

Note

Safety extra-low voltage

The supply of the devices by PELV (Protective Extra Low Voltage) according to DIN VDE 0100-410 or IEC 60364-4-41 is permitted when the generated nominal voltage does not exceed the voltage limits 25 VAC or 60 VDC.

WARNING

Safety extra-low voltage

If you operate the device with PELV, the following approvals and certifications lose their validity:

UL, FM, ATEX, IECEx, UKEX, CCC-Ex

WARNING

Safety extra-low voltage

System power supplies with grounded 24 V DC output voltage require a safe connection to the protective conductor and limiting of the voltage (extra-low voltage) This protection is called PELV (protective extra-low voltage) in accordance with IEC 61131-2 or IEC 61010-2-201. The wiring of PELV circuits must be safely isolated from the wiring of other non-PELV circuits, or the insulation of all conductors must be rated for higher voltage.

WARNING

Requirements for operation with limited power or safety extra low voltage

1. If the device is supplied by a power supply with limited power (Limited Power Source, LPS) that complies with National Electrical Code (r) (ANSI / NFPA 70), then no additional power limitation is required.
   If the device is connected to a redundant power supply (two separate power supplies), the combination of the two power supplies must meet these requirements.
   To comply with EU Directive 2014/34/EU (ATEX 114), UK Regulation SI 2016/1107 or the conditions of IECEx or CCC-Ex, the housing or cabinet must meet the requirements of at least IP54 (according to EN/IEC 60529, GB/T 4208) in compliance with EN IEC/IEC 60079-7, GB 3836.3.
2. If the device is operated with a power supply for safety extra low voltage (SELV) without limited power and the entire power requirement does not exceed 100 W, a fuse must be installed between the power supply and each supply input of the device to meet the requirements for limited power (Limited Power Source, LPS). For more information, see "Suitable fusing for the power supply cables" below.
   To comply with EU Directive 2014/34/EU (ATEX 114), UK Regulation SI 2016/1107 or the conditions of IECEx or CCC-Ex, the housing or cabinet must meet the requirements of at least IP54 (according to EN/IEC 60529, GB/T 4208) in compliance with EN IEC/IEC 60079-7, GB 3836.3.

NOTICE

Suitable fuse for the power supply cables (corresponds to "Limited Energy")

The current on the terminal may not exceed 3 A. Use a fuse for the power supply that is suitable for protection of AC/DC power supply circuits *) and protects against currents > 3 A.

- In areas subject to the NEC or CEC, the fuse must meet the following requirements:
  - Suitable for AC/DC *) (min. 60 V / 3 A)
  - Breaking current at least 10 kA
  - Approval according to ANSI/UL 248-14 (suppl. fuses), ANSI/UL 248-4 (Class CC), ANSI/UL 248-8 (J), ANSI/UL 248-15 (T), or CSA C22.2-4 No. 248.14 (suppl. fuses), No. 248-4 (Class CC), No. 248-8 (J), No. 248-15 (T)
- In other areas, the fuse must meet the following requirements:
  - Suitable for AC/DC *) (min. 60 V / 3 A)
  - Breaking current at least 10 kA
  - Approval according to IEC/EN 60947-1/2/3 or IEC/EN 60898-1/2 for circuit breakers
  - Breaking characteristics: B or C
  - Approval according to IEC/EN 60127-1 for fuses
  - Breaking characteristics: max. 120 s at 2 x I_n (corresponds to melting integral $I^2t < 4320$)

If the properties of the supplying current source are known, the following fuse is also possible:

- In areas subject to the NEC or CEC, the fuse must meet the following requirements:
  - Suitable for AC/DC *) (min. 60 V / 3 A)
  - Breaking current > highest possible current of the current source (incl. short circuit current and fault)
  - Approval according to UL 1077 or CSA C22.2 No. 235
- In other areas, the fuse must meet the following requirements:
  - Suitable for AC/DC *) (min. 60 V / 3 A)
  - Breaking current > highest possible current of the current source (incl. short circuit current and fault)
  - Approval according to IEC/EN 60934
  - Breaking characteristics: max. 120s at 2 x I_n

*) AC or DC depending on availability

6.2 Safety notices for PoE devices

Operate the device with a power supply according to "Limited Energy". When connecting up the device, keep to the safety notices listed below.

WARNING

Safety notices for operation with a power supply according to "Limited Energy"

1. If the device is supplied by a power supply with limited power (Limited Energy) that complies with IEC/UL61010-1 or VDE 0805-1, no additional power limitation is required according to National Electrical Code (r) (ANSI/NFPA 70).
   If the device is connected to a redundant power supply (two separate power supplies), there must be a fuse between each of the two power supplies and each power supply input of the device. The fuses must ensure that the sum of the power at the two power supply inputs does not exceed 100 W.
   To comply with EU Directive 2014/34/EU (ATEX 114), UK Regulation SI 2016/1107 or the conditions of IECEx or CCC-Ex, the housing or cabinet must meet the requirements of at least IP54 (according to EN/IEC 60529, GB/T 4208) in compliance with EN IEC/IEC 60079-7, GB 3836.3.
2. If the device is operated with a power supply for without power limitation and the entire power requirement does not exceed 100 W, a fuse must be installed between the power supply and each supply input of the device to meet the requirements for limited power (Limited Energy) according to IEC/UL61010-1 or VDE 0805-1. For more information, see "Suitable fusing for the power supply cables" below.
   If the device is connected to a redundant power supply (two separate power supplies), there must be a fuse between each of the two power supplies and each power supply input of the device. The fuses must ensure that the sum of the power at the two power supply inputs does not exceed 100 W.
   To comply with EU Directive 2014/34/EU (ATEX 114), UK Regulation SI 2016/1107 or the conditions of IECEx or CCC-Ex, the housing or cabinet must meet the requirements of at least IP54 (according to EN/IEC 60529, GB/T 4208) in compliance with EN IEC/IEC 60079-7, GB 3836.3.
3. If the device is operated with a power supply without power limitation and the entire power requirement exceeds 100 W, the device must be installed in a fire protection housing according to ANSI/UL-61010-1:2018, paragraph 9.3.

NOTICE

Suitable fuse for the power supply cables (corresponds to "Limited Energy")

The current on the terminal may not exceed 3 A. Use a fuse for the power supply that is suitable for protection of AC/DC power supply circuits *) and protects against currents > 3 A.

- In areas subject to the NEC or CEC, the fuse must meet the following requirements:
  - Suitable for AC/DC *) (min. 60 V / 3 A)
  - Breaking current at least 10 kA
  - Approval according to ANSI/UL 248-14 (suppl. fuses), ANSI/UL 248-4 (Class CC), ANSI/UL 248-8 (J), ANSI/UL 248-15 (T), or CSA C22.2-4 No. 248.14 (suppl. fuses), No. 248-4 (Class CC), No. 248-8 (J), No. 248-15 (T)
- In other areas, the fuse must meet the following requirements:
  - Suitable for AC/DC *) (min. 60 V / 3 A)
  - Breaking current at least 10 kA
  - Approval according to IEC/EN 60947-1/2/3 or IEC/EN 60898-1/2 for circuit breakers
  - Breaking characteristics: B or C
  - Approval according to IEC/EN 60127-1 for fuses
  - Breaking characteristics: max. 120 s at 2 x I_n (corresponds to melting integral $I^2t < 4320$)

If the properties of the supplying current source are known, the following fuse is also possible:

- In areas subject to the NEC or CEC, the fuse must meet the following requirements:
  - Suitable for AC/DC *) (min. 60 V / 3 A)
  - Breaking current > highest possible current of the current source (incl. short circuit current and fault)
  - Approval according to UL 1077 or CSA C22.2 No. 235
- In other areas, the fuse must meet the following requirements:
  - Suitable for AC/DC *) (min. 60 V / 3 A)
  - Breaking current > highest possible current of the current source (incl. short circuit current and fault)
  - Approval according to IEC/EN 60934
  - Breaking characteristics: max. 120s at 2 x I_n

*) AC or DC depending on availability

6.3 Safety instructions on use in hazardous areas

General safety notices relating to protection against explosion

WARNING

EXPLOSION HAZARD

Do not connect or disconnect cables to or from the device when a flammable or combustible atmosphere is present.

WARNING

EXPLOSION HAZARD

Do not press the SELECT/SET button when there is an explosive atmosphere.

WARNING

Unsuitable cables or connectors

Risk of explosion in hazardous areas

- Only use connectors that meet the requirements of the relevant type of protection.
- If necessary, tighten the connector screw connections, device fastening screws, grounding screws, etc. according to the specified torques.
- Close unused cable openings for electrical connections.
- Check the cables for a tight fit after installation.

WARNING

Lack of equipotential bonding

If there is no equipotential bonding in hazardous areas, there is a risk of explosion due to equalizing current or ignition sparks.

- Ensure that equipotential bonding is available for the device.

WARNING

Unprotected cable ends

There is a risk of explosion due to unprotected cable ends in hazardous areas.

- Protect unused cable ends according to IEC/EN 60079-14.

WARNING

Improper installation of shielded cables

There is a risk of explosion due to equalizing currents between the hazardous area and the non-hazardous area.

- Ground shielded cables that cross hazardous areas at one end only.
- Lay a potential equalization conductor when grounding at both ends.

WARNING

Insufficient isolation of intrinsically safe and non-intrinsically safe circuits

Risk of explosion in hazardous areas

- When connecting intrinsically safe and non-intrinsically safe circuits, ensure that the galvanic isolation is performed properly in compliance with local regulations (e.g. IEC 60079-14).
- Observe the device approvals applicable for your country.

Notes for use in hazardous locations according to ATEX, IECEx, UKEX and CCC Ex

If you use the device under ATEX, IECEx, UKEX or CCC Ex conditions you must also keep to the following safety instructions in addition to the general safety instructions for protection against explosion:

WARNING

Transient overvoltages

Take measures to prevent transient surges of more than 40% of the rated voltage. Under no circumstances may transient surges exceed 119 V. This is the case if you only operate devices with SELV (safety extra low voltage).

WARNING

Suitable cables at high ambient temperatures in hazardous area

At an ambient temperature of ≥ 60 °C, use heat-resistant cables designed for an ambient temperature at least 20 °C higher. The cable entries used on the housing must comply with the IP degree of protection required by EN IEC / IEC 60079-0, GB/T 3836.1.

Safety instructions for use in hazardous locations according to UL/FM HazLoc

If you use the device under UL or FM HazLoc conditions, you must also adhere to the following safety instructions in addition to the general safety instructions for protection against explosion:

WARNING

EXPLOSION HAZARD

You may only connect or disconnect cables carrying electricity when the power supply is switched off or when the device is in an area without inflammable gas concentrations.

Safety notices when using according to FM

If you use the device under FM conditions you must also keep to the following safety notices in addition to the general safety notices for protection against explosion:

WARNING

EXPLOSION HAZARD

Do not disconnect while circuit is live unless area is known to be non-hazardous.

6.4 Further notes

WARNING

Insulation of external power supplies

Ext. circuits intended to be connected to this device shall be galv. separated from hazardous live voltage by reinforced or double insulation.

WARNING

Safety notice for connecting with a LAN ID (Local Area Network)

A LAN or LAN segment with all the interconnected devices should be contained completely in a single low voltage power distribution in a building. The LAN is designed either for “Environment A” according to IEEE802.3 or "Environment 0" according to IEC TR 62102.

Do not connect any electrical connectors directly to the telephone network (telephone network voltage) or a WAN (Wide Area Network).

The following table shows which ports fulfill the conditions of Environment A or B:

Galvanically isolated environment	Ethernet ports	Ethernet ports with PoE
Environment A (IEEE 802.3)	Yes	Yes
Environment B (IEEE 802.3)	Yes	No

Note

Protective ground

A PELV circuit contains a connection to protective ground. Without a connection to protective ground, or in case there is a fault in the connection to the protective ground, the voltage for the circuit is not stabilized.

Note

Minimum temperature rating of the cable to be connected to the field wiring terminals, 90 °C.

6.5 Industrial Ethernet

6.5.1 Electrical

Note

Strain relief for the Ethernet cables

In order to avoid mechanical stress on the Ethernet cables and resulting interruption of the contact, fasten the cables at a short distance from the connector using a cable guide or busbar.

Note

Unlocking the plug with a screwdriver

If installation space is limited, you can unlock the connectors using a screwdriver, see also "SIMATIC NET: IE FC RJ45 Plug 4x2 CAT 6A (https://support.industry.siemens.com/cs/ww/en/view/102047916)".

R-45 connector technology

The attachment to Industrial Ethernet uses RJ-45 connected technology with MDI-X assignment.

Pin assignment

The following table shows the pin assignment of the R-45 connectors.

Pin number	Assignment		R-45 connector
	10/100 Mbps	10/100/1000 Mbps	
Pin 1	RD+	D1+	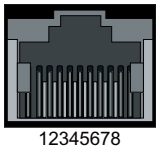
Pin 2	RD-	D1-	
Pin 3	TD+	D2+	
Pin 4	n. c. (Not connected)	D3+	
Pin 5	n. c. (Not connected)	D3-	
Pin 6	TD-	D2-	
Pin 7	n. c. (Not connected)	D4+	
Pin 8	n. c. (Not connected)	D4-	

MDI / MDI-X autocrossover

With the MDI/MDI-X autocrossover function, the send and receive contacts of an Ethernet port are assigned automatically. The assignment depends on the cable with which the communications partner is connected. This means that it does not matter whether the port is connected using a patch cable or crossover cable. This prevents malfunctions resulting from mismatching send and receive wires. This makes installation much easier for the user.

Note

Formation of loops

Please note that the direct connection of two ports on the IE switch or accidental connection over several IE switches causes an illegal loop. Such a loop can lead to network overload and network failures.

Autonegotiation

Autonegotiation means the automatic detection/negotiation of the transmission rate and the operating mode of ports at the opposite end. This makes it possible to configure different devices automatically.

Two components connected to a link segment can exchange information about the transfer and can adapt their settings to each other. The mode with the highest possible speed is set.

Note

- If a port is set permanently to full duplex, the connected partner port must also be set to full duplex.
- If a port operating in the "Auto negotiation" mode is connected to a partner port that is not operating in the"Auto negotiation" mode, the partner port setting must be fixed at 100 Mbps or 10 Mbps half duplex mode.
- If you disable the "Auto negotiation" function, the "MDI/MDI-X autocrossover" function remains active.

6.5.2 Optical

CAUTION

Devices with beam sources

Connect cables to the optical ports or seal unused optical beam sources with the protective caps supplied.

NOTICE

Failure of the data traffic due to contamination of optical plug-in connections

Optical sockets and plugs are sensitive to contamination of the end face. Contamination can lead to the failure of the optical transmission network. Take the following precautions to avoid functional impairments:

- Clean the end face of field-assembled connectors carefully before connecting. No residues of processing may remain on the connector.
- Only remove the dust caps of optical transceivers and pre-configured cables shortly before connecting the cables.
- Close unused optical sockets and plugs as well as pluggable transceivers and slots with the supplied protective caps.

Note

No light power measurement (PROFINET diagnostics)

The devices do not support diagnostics with light power measurement.

SC connectors

The attachment to Industrial Ethernet uses SC connector technology (Subscriber Connector).

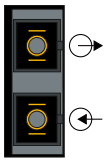

ST/BFOC connectors

The attachment to Industrial Ethernet uses ST/BFOC connector technology (Straight Tip/Bayonet Fiber Optic Connector).

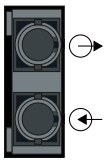

LC connector technology

The attachment to Industrial Ethernet uses LC connector technology (Lucent Connector).

Pluggable transceiver slot/ plugged in transceiver

6.6 Wiring rules

When wiring use cables with the following AWG categories or cross sections.

Wiring rules for ...		**Screw/spring-loaded terminals**
connectable cable cross sections for flexible cables ...	without wire end ferrule	0.25 - 2.5 mm^2
		AWG: 24 - 13
	with wire end ferrule with plastic ferrule**	0.25 - 2.5 mm^2
		AWG: 24 - 13
	with wire end ferrule without plastic ferrule**	0.25 - 2.5 mm^2
		AWG: 24 - 13
	with TWIN wire end ferrule**	0.5 - 1 mm^2
		AWG: 20 - 17
Stripped length of the cable		8 - 10 mm
Wire end ferrule according to DIN 46228 with plastic ferrule**		8 - 10 mm

* AWG: American Wire Gauge

** See note "Wire end ferrules"

Note

Wire end ferrules

Use crimp shapes with smooth surfaces, such as provided by square and trapeze shaped crimp cross sections.

Crimp shapes with wave-shaped profile are unsuitable.

Note

Wiring with PoE variants

PoE variants have a high current consumption. Design the cable cross-section based on the maximum current consumption.

6.7 24 V DC power supply

Notes on the power supply

WARNING

Incorrect power supply

If the power supply is designed redundantly (two separate power supplies), the combination of the two power supplies must meet these requirements.

Never operate the device with AC voltage or DC voltage higher than 32 V DC.

CAUTION

Damage to the device due to overvoltage

The connector of the external power supply is not protected against strong electromagnetic pulses that can, for example, result from lightning strikes or switching large loads.

One of the tests used to attest the immunity of devices of the IE switches SCALANCE XC-200 to electromagnetic interference was the "surge immunity test" according to EN61000-4-5. This test requires overvoltage protection for the power supply lines. A suitable device is, for example, the Dehn Blitzductor BVT AVD 24, article number 918 422 or a comparable protective element.

Manufacturer: DEHN+SOEHNE GmbH+Co. KG, Hans-Dehn-Str.1, Postfach 1640, D92306 Neumarkt, Germany

Operate the SCALANCE XC-200 with suitable overvoltage protection.

Note

The device can be disconnected from the power supply by pulling off the terminal block.

Information on the power supply

- The "L1" and "L2" LEDs indicate the current range of the power supply, see the section "LEDs "L1" and "L2" (Page 46)".
- The power supply is connected using a 4-pin plug-in terminal block (spring-loaded terminal). The terminal block ships with the device and can also be ordered as a spare part, see section "Product overview (Page 21)".
- The power supply can be connected redundantly. Both inputs are isolated. There is no distribution of load. When a redundant power supply is used, the power supply unit with the higher output voltage supplies the device alone.
- The power supply is connected over a high resistance with the enclosure to allow an ungrounded set up. The two power inputs are non-floating.
- Note the wiring rules (Page 83).

Position and assignment

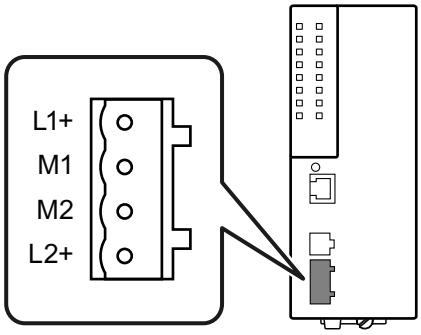

Figure 6-1 Position of the power supply based, for example on the SCALANCE XC-200 with 8 ports and assignment of the terminal block

Contact	Assignment
L1+	24 VDC
M1	Ground
M2	Ground
L2+	24 VDC

6.8 54 V DC power supply

Notes on the power supply

WARNING

Incorrect power supply

When the device is connected to a redundant power supply (two separate power supplies), both must meet these requirements.

Never operate the device with AC voltage or DC voltage higher than 57 V DC.

CAUTION

Damage to the device due to overvoltage

The connector of the external power supply is not protected against strong electromagnetic pulses that can, for example, result from lightning strikes or switching large loads.

One of the tests used to attest the immunity of devices of the IE switches SCALANCE XC-200 to electromagnetic interference was the "surge immunity test" according to EN61000-4-5.

Note

The device can be disconnected from the power supply by pulling off the terminal block.

Information on the power supply

- Make sure that among other things the external power supply unit meets the following basic requirements:
  - The output voltage (PoE voltage) is a safety extra-low voltage (SELV).
  - The output voltage (PoE voltage) meets the isolation requirements according to IEEE 802.3at (in other words 1500 VAC or 2250 VDC) to ground, to touchable conductive parts and (if they exist) other secondary voltages.
  - Fuse the output voltage (PoE voltage) externally, see the section "Connecting (Page 71)".
- Select a suitable power of the external power supply unit, so that the power supply to the power consumers is ensured, see the section "Power over Ethernet (PoE) (Page 51)".
- For the cable supplying the power supply, use a cable with a length of max. 3 m.
- The power supply is connected using a 4-pin plug-in terminal block (spring-loaded terminal). The terminal block ships with the device and can also be ordered as a spare part, see section "Product overview (Page 21)".
- The power supply can be connected redundantly. Both inputs are isolated. There is no distribution of load. The power supply unit with the higher output voltage supplies the device alone.
- The power supply is connected over a high resistance with the enclosure to allow an ungrounded set up. The two power inputs are non-floating.
- The "L1" and "L2" LEDs indicate the current range of the power supply, see the section "LEDs "L1" and "L2" (Page 46)".
- Note the wiring rules (Page 83).

Position and assignment

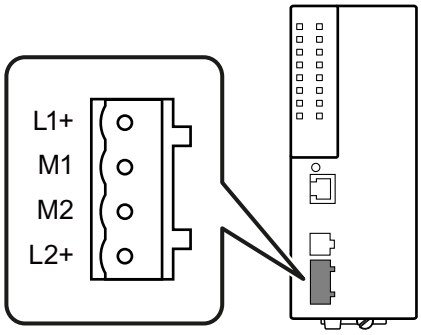

Figure 6-2 Position of the power supply based, for example on the SCALANCE XC-200 with 8 ports and assignment of the terminal block

Contact	Assignment
L1+	54 V DC
M1	Ground
M2	Ground
L2+	54 V DC

Connecting multiple to a 54 V DC power supply unit

If you connect multiple devices with a 54 V DC power supply (e.g. XC-200G PoE) to a 54 V DC power supply, note the following for the communication connection between these devices:

- Use ports that do not support PoE for the communication connection, if possible.
- If you connect the devices via PoE ports, the PoE ports must be galvanically isolated (e.g. via a network disconnector).

6.9 Signaling contact

Information on the signaling contact

- The signaling contact is a floating switch that signals error statuses by opening the contact. The signaling contact must be operated within the range of the operating voltage.
  If an error/fault occurs, the signaling contact opens. In normal operation, the signaling contact is closed.
- The signaling contact is connected using a 2-pin plug-in terminal block (spring-loaded terminal). The terminal block ships with the device and can also be ordered as a spare part, see section "Product overview (Page 21)".
- Note the wiring rules (Page 83).

NOTICE
Damage due to voltage being too high
You can load the signaling contact with the operating voltage of the device and a maximum of 100 mA.
Higher voltages or currents can damage the device.

Position and assignment

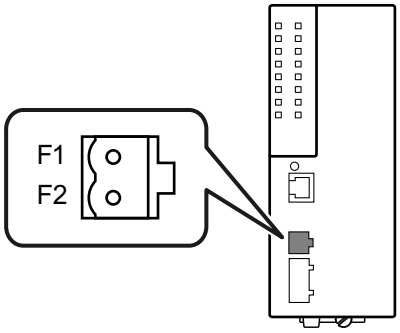

Figure 6-3 Position of the signaling contact based, for example on the SCALANCE XC-200 with 8 ports and assignment of the terminal block

Contact	Assignment
F1	Fault contact 1
F2	Fault contact 2

Signaling faults

- The signaling of errors by the signaling contact is synchronized with the fault LED "F", see section ""F" LED (Page 45)".
  All errors that the fault LED "F" indicates (freely configurable) are also signaled by the signaling contact.
- If an internal fault occurs, the fault LED "F" lights up and the signaling contact opens.
- If you connect a communications node to an unmonitored port or disconnect it, this does not cause an error message.
- The signaling contact remains open until one of the following events occurs:
  - The problem is eliminated.
  - The current status is entered in the fault mask as the new desired status.

6.10 Functional ground

EMC disturbances are diverted to ground via the functional ground. This ensures the immunity of the data transmission.

The functional ground must be implemented with low impedance. The connection of the functional ground must be established directly on the mounting plate or the DIN rail terminal.

The IE switch has a grounding screw (fillister head screw with clamping washer und disk) for functional ground, refer to the section "Device views (Page 27)".

The grounding screw is identified by the following symbol for the functional ground ⏚.

Follow the steps below to connect the functional ground:

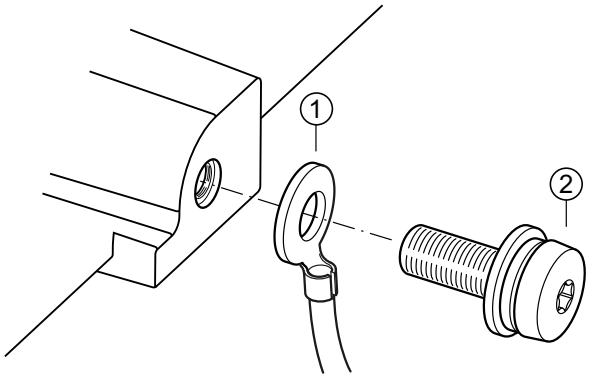

① Grounding terminal with cable
② Fillister head screw with spring washer and washer

1. Loosen the grounding screw).
2. Put the grounding terminal and grounding screw together.
3. Tighten the grounding screw with a maximum torque of 0.75 Nm.

Protective/functional ground

The connection of the reference potential surface with the protective ground system is normally in the cabinet close to the power feed-in. This ground conducts fault currents to ground safely and according DIN/VDE 0100 is a protective ground to protect people, animals and property from too high contact voltages.

Apart from the protective ground, there is functional grounding in the cabinet. According to EN60204-1 (DIN/VDE 0113 T1) electrical circuits must be grounded. The chassis (0 V) is grounded at one defined point. Here, once again the grounding is implemented with the lowest leakage resistance to ground in the vicinity of the power feed-in.

With automation components, functional ground also ensures interference-free operation of a controller. Via the functional ground, interference currents coupled in via the connecting cables are discharged to ground.

6.11 Serial interface

Information on the serial interface

- Via the serial interface on the device (RJ-11 jack), you can access the Command Line Interface of the device directly via an RS-232 (115200 8N1) connection without assigning an IP address.
- Access to the device is possible independent of the Ethernet ports.
- To connect the serial interface to a PC, you require a cable with an RJ-11 plug and 9-pin D-sub female connector. The connecting cable for the serial interface can be ordered as an accessory, see section "Accessories (Page 37)".

Position and assignment

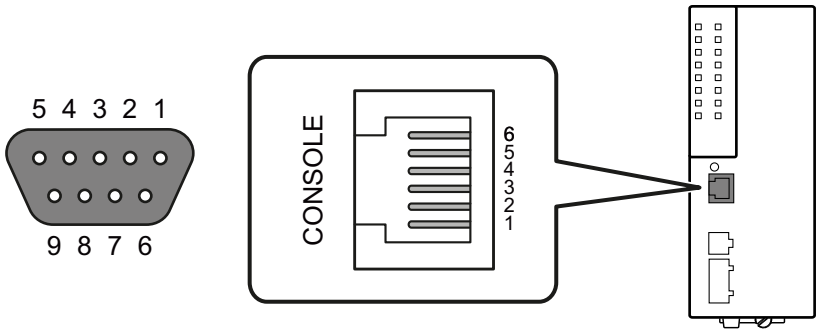

Figure 6-4 Position and pin assignment of the serial interface (RJ-11 jack), based for example on the XC-200 with 8 ports as well as the pin assignment of the D-sub socket.

Assignment of the terminal block

The connecting cable has the following assignment:

Contact	Pin assignment of the RJ-11 plug	Pin assignment of the D-sub female connector
1	-	-
2	-	TD (Transmit Data)
3	TD (Transmit Data)	RD (Receive Data)
4	SG (Signal Ground)	-
5	RD (Receive Data)	SG (Signal Ground)
6	-	-
7		-
8		-
9		-

Note

Pin assignment of the RJ-11 jack on the device

The RJ-11 jack on the device has a pinout to match the RJ-11 plug of the connecting cable.

6.12 Replacing a C-PLUG

NOTICE

Do not remove or insert a C-PLUG during operation

The C-PLUG may only be removed or inserted when the device is turned off.

The device checks whether or not a C-PLUG is inserted at one second intervals. If it is detected that the PLUG was inserted or removed, there is a restart.

Removing a C-PLUG

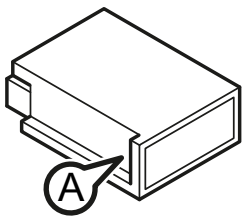

1. Turn off the power to the device.
2. Insert a screwdriver between the front edge of the C-PLUG (A) and the slot and release the C-PLUG.
3. Remove the C-PLUG.

Inserting a C-PLUG

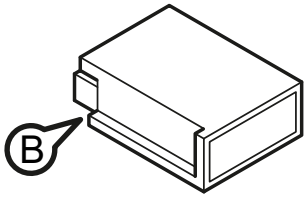

1. Turn off the power to the device.
2. The housing of the C-PLUG has a protruding ridge on the long side (B). The slot has a groove at this position. Insert the C-PLUG correctly oriented into the slot.

Maintenance and cleaning

7

WARNING

Unauthorized repair of devices in explosion-proof design

Risk of explosion in hazardous areas

- Repair work may only be performed by personnel authorized by Siemens.
- For function checks, maintenance and servicing work, you need to observe the requirements on checking and maintaining plants in hazardous areas according to the standards EN / IEC 60079-17.

WARNING

Impermissible accessories and spare parts

Risk of explosion in hazardous areas

- Only use original accessories (Page 37) and original spare parts (Page 21).
- Observe all relevant installation and safety instructions described in the manuals for the device or supplied with the accessories or spare parts.

CAUTION

Hot surfaces

Risk of burns during maintenance work on parts with a surface temperature above 70 °C (158 °F).

- Take appropriate protective measures, for example, wear protective gloves.
- Once maintenance work is complete, restore the touch protection measures.

NOTICE

Cleaning the housing

If the device is not in a hazardous area, only clean the outer parts of the housing with a dry cloth.

If the device is in a hazardous area, use a slightly damp cloth for cleaning.

Do not use solvents.

Troubleshooting

8

8.1 Downloading new firmware using TFTP without WBM and CLI

Firmware

The firmware is signed and encrypted. This ensures that only firmware created by Siemens can be downloaded to the device.

Procedure with Microsoft Windows

You can download new firmware to the device using TFTP. To do this, the device does not need to be reachable either using Web Based Management (WBM) or using the Command Line Interface (CLI). This can be the case if there was a power failure during a firmware update.

When pressing the button, observe the information in the section "SELECT / SET button (Page 42)".

Follow the steps below to load new firmware using TFTP:

1. Turn off the power to the device.
2. Press the SELECT/SET button and reconnect the device to the power supply with the button pressed.
3. Hold down the button until the red fault LED "F" starts to flash.
4. Release the button as long as the red error LED is still flashing..
   This time only lasts a few seconds.
   The bootloader of the device waits in this status for a new firmware file that you can download by TFTP.
5. Connect a PC to an Ethernet port of the device with an Ethernet cable.
6. Assign an IP address to the device using DHCP or SINEC PNI.
7. In a Windows command prompt, go to the directory where the file with the new firmware is located and use the following command:
   `tftp -i <IP address> put <firmware file>.`

   Note

   You can enable TFTP in Microsoft Windows as follows:

   "Control Panel" > "Programs and Features" > "Turn Windows features on or off" > "TFTP Client".

   Once the firmware has been transferred completely to the device and validated, the device restarts. This may take a few minutes.

8.2 Restoring the factory settings

NOTICE
Previous settings If you reset, all the settings you have made will be overwritten by factory defaults.

NOTICE
Inadvertent reset An inadvertent reset can cause disturbances and failures in the configured network.

Restoring the factory settings during the startup phase

NOTICE
Reset despite disabled "SELECT/SET" button Using the "SELECT/SET" button, you can always reset the device parameters to the factory defaults during the startup phase of the device. This applies also if the "Reset to Factory Defaults" function was disabled in the configuration. This allows you to reset the device to the factory defaults in an emergency. If the function has been disabled in the configuration, it is only disabled on completion of the startup phase.

To reset the device to the factory defaults during the startup phase, follow the steps below:

1. Turn off the power to the device.
2. Now press the "SELECT/SET" button and reconnect the power to the device while holding down the button.
3. Hold down the button until the red error LED "F" stops flashing and is permanently lit.
4. Now release the button and wait until the fault LED "F" goes off again.
5. The device starts automatically with the factory defaults.

Restoring the factory defaults during operation

You can also reset the device to the factory defaults during operation, see section "SELECT / SET button (Page 42)".

Technical specifications

9

9.1 Technical specifications SCALANCE XC206-2 (ST/BFOC)

The following technical specifications apply to the SCALANCE XC206-2 (ST/BFOC).

Technical specifications		
Diagnostics interface		
Serial interface	Quantity	1
	Connector	RJ-11 jack
Electrical data		
Power supply [1)]	Rated voltage	12 to 24 V DC
	Voltage range (incl. tolerance)	9.6 to 31.2 V DC Safe Extra Low Voltage (SELV)
	Design	Terminal block, 4 terminals
	Properties	Implemented redundantly; The connected power supply must meet the requirements of NEC Class 2.
Current consumption	12 VDC	500 mA
	24 VDC	250 mA
Effective power loss		6 W
Overvoltage category		CAT II
Fusing		2.5 A / 125 V
Signaling contact [1)]	Quantity	1
	Design	Terminal block, 2 terminals
	Permitted voltage range	24 VDC
	Load capability	max. 100 mA
Permitted ambient conditions		
Ambient temperature	With operation up to 2000 m above sea level	During operation in horizontal installation position: -40 °C to +70 °C During operation in a different installation position: -40 °C to +60 °C
	During storage	-40 °C to +85 °C
	During transportation	-40 °C to +85 °C
Relative humidity	During operation at 25 °C	≤ 95% without condensation
Housing, dimensions and weight		
Design	compact	
Housing material	Basic housing	Die cast aluminum, powder coated
	Front cover	Polycarbonate (PC-GF10)
Degree of protection	IP20	

Technical specifications	
Dimensions (W x H x D)	60 x 147 x 125 mm
Weight	540 g
Installation options	• Wall mounting • Installation on a DIN rail • Mounting on an S7-300 standard rail • Mounting on an S7-1500 standard rail
Mean time between failure (MTBF)	
MTBF (EN/IEC 61709; 40 °C)	> 46 years

[1)] Note the wiring rules (Page 83).

Connection to Industrial Ethernet

Electrical connectors

Properties	
Quantity	6
Connector	RJ-45 jack
Properties	Half/full duplex, MDI-X pinning
Transmission speed	10 / 100 Mbps

Optical connectors

Optical connectors	
Quantity	2
Connectors	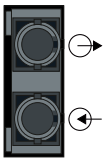 The attachment to Industrial Ethernet uses ST/BFOC connector technology (Straight Tip/Bayonet Fiber Optic Connector).

Properties		
Transmission mode	100Base-FX complying with IEEE 802.3	
Transmission rate	100 Mbps (Fast Ethernet)	
Transmission medium	Multimode fiber-optic cable	
Light source	LED/Class1-LASER "Eye safe"	
Wavelength	1300 nm	
Cable length (max.) *[)]	At 50 µm fiber core diameter	3 km
	At 62.5 µm fiber core diameter	3 km

Properties			
Transmitter output (optical)	Minimum	At 50 µm	-24 dBm
		At 62.5 µm	-20 dBm
	Maximum		-14 dBm
Receiver input	Sensitivity min.		-31 dBm
	Input power max.		-12 dBm

*) Depending on the cable used:

- If you are using at least OM1 fibers (attenuation ≤ 1.5 dB/km, bandwidth length product ≥ 500 MHz*km), you can reach a cable length of up to 3 km.
- When are using fibers with attenuation values ≤ 1 dB/km, you can reach a cable length of up to 5 km.

You can find additional information in the "Industrial Ethernet / PROFINET Passive network components" System Manual, see also section "Introduction", paragraph "Additional documentation".

9.2 Technical specifications SCALANCE XC206-2 (SC)

The following technical specifications apply to the SCALANCE XC206-2 (SC).

Technical specifications		
Diagnostics interface		
Serial interface	Quantity	1
	Connector	RJ-11 jack
Electrical data		
Power supply [1)]	Rated voltage	12 to 24 V DC
	Voltage range (incl. tolerance)	9.6 to 31.2 V DC Safe Extra Low Voltage (SELV)
	Design	Terminal block, 4 terminals
	Properties	Implemented redundantly; The connected power supply must meet the requirements of NEC Class 2.
Current consumption	12 VDC	500 mA
	24 VDC	250 mA
Effective power loss		6 W
Overvoltage category		CAT II
Fusing		2.5 A / 125 V
Signaling contact [1)]	Quantity	1
	Design	Terminal block, 2 terminals
	Permitted voltage range	24 VDC
	Load capability	max. 100 mA
Permitted ambient conditions		

Technical specifications		
Ambient temperature	With operation up to 2000 m above sea level	During operation in horizontal installation position: -40 °C to +70 °C During operation in a different installation position: -40 °C to +60 °C
	During storage	-40 °C to +85 °C
	During transportation	-40 °C to +85 °C
Relative humidity	During operation at 25 °C	≤ 95% without condensation
Housing, dimensions and weight		
Design	compact	
Housing material	Basic housing	Die cast aluminum, powder coated
	Front cover	Polycarbonate (PC-GF10)
Degree of protection	IP20	
Dimensions (W x H x D)	60 x 147 x 125 mm	
Weight	540 g	
Installation options	• Wall mounting • Installation on a DIN rail • Mounting on an S7-300 standard rail • Mounting on an S7-1500 standard rail	
Mean time between failure (MTBF)		
MTBF (EN/IEC 61709; 40 °C)	> 46 years	

[1] Note the wiring rules (Page 83).

Connection to Industrial Ethernet

Electrical connectors

Properties	
Quantity	6
Connector	RJ-45 jack
Properties	Half/full duplex, MDI-X pinning
Transmission speed	10 / 100 Mbps

Optical connectors

Optical connectors	
Quantity	2
Connectors	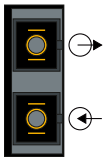 The attachment to Industrial Ethernet uses SC connector technology (Subscriber Connector).

Properties			
Transmission mode	100Base-FX complying with IEEE 802.3		
Transmission rate	100 Mbps (Fast Ethernet)		
Transmission medium	Multimode fiber-optic cable		
Light source	LED/Class1-LASER "Eye safe"		
Wavelength	1300 nm		
Cable length (max.) *)	At 50 µm fiber core diameter		3 km
	At 62.5 µm fiber core diameter		3 km
Transmitter output (optical)	Minimum	At 50 µm	-24 dBm
		At 62.5 µm	-20 dBm
	Maximum		-14 dBm
Receiver input	Sensitivity min.		-31 dBm
	Input power max.		-12 dBm

*) Depending on the cable used:

- If you are using at least OM1 fibers (attenuation ≤ 1.5 dB/km, bandwidth length product ≥ 500 MHz*km), you can reach a cable length of up to 3 km.
- When are using fibers with attenuation values ≤ 1 dB/km, you can reach a cable length of up to 5 km.

You can find additional information in the "Industrial Ethernet / PROFINET Passive network components" System Manual, see also section "Introduction", paragraph "Additional documentation".

9.3 Technical specifications of SCALANCE XC206-2G PoE

The following technical specifications apply to the SCALANCE XC206-2G PoE.

Technical specifications		
Connection to Industrial Ethernet		
Electrical connectors	Quantity	6
	Connector	RJ45 jack
	Properties	Half/full duplex, MDI-X pinning
	Transmission speed	10 / 100 / 1000 Mbps
Slots for pluggable transceivers	Quantity	2
	Connector	SFP transceivers (LC port)
	Transmission speed	1000 / 10000 Mbps 100 Mbps also possible via active SFPs
Diagnostics interface		
Serial interface	Quantity	1
	Connector	RJ-11 jack
Electrical data		
Power supply [1)]	Rated voltage	24 V DC
	Voltage range (incl. tolerance)	19.2 to 31.2 V DC Safe Extra Low Voltage (SELV)
	Design	Terminal block, 4 terminals
	Properties	Implemented redundantly
Current consumption	At 19.2 V DC	Max. 7.5 A
Effective Power	At max PoE load	Max. 144 W
Thermal Design Power		Max. 18 W
Overvoltage category		CAT II
Fusing	Basic device	2.5 A / 125 V
	PoE consumers	15 A / 125 V
PoE power per device	At 24 V DC	With horizontal mounting position and operation without pluggable transceiver: • 120 W In other installation position: • 90 W
Signaling contact [1)]	Quantity	1
	Design	Terminal block, 2 terminals
	Permitted voltage range	24 V DC
	Load capability	Max. 100 mA
Permitted ambient conditions		

Technical specifications		
Ambient temperature [2]	During LAN operation with RJ45 connector with max. PoE load up to 2000 m above sea level	During operation in horizontal installation position: • -40 °C to +60 °C During operation in a different installation position: • -40 °C to +50 °C
	When operating with pluggable transceivers of the types: • [-] Standard version • LD Up to 2000 m above sea level	During operation in horizontal installation position: • -40 °C to +60 °C • Max. PoE power: 90 W During operation in a different installation position: • -40 °C to +50 °C • Max. PoE power: 60 W
	When operating with pluggable transceivers of the types: • LH • LH+ • ELH • SFP992-1+ Up to 2000 m above sea level	During operation in horizontal installation position: • -40 °C to +55 °C • Max. PoE power: 90 W Other mounting positions are not permitted.
	During storage	-40 °C to +85 °C
	During transportation	-40 °C to +85 °C
Relative humidity	During operation at 25 °C	≤ 95% without condensation
Housing, dimensions and weight		
Design	Compact	
Housing material	Basic housing	Die cast aluminum, powder coated
	Front cover	Polycarbonate (PC-GF10)
Degree of protection	IP20	
Dimensions (W x H x D)	100 x 147 x 125 mm	
Weight	955 g	
Installation options	• Wall mounting • Installation on a DIN rail • Mounting on an S7-300 standard rail • Mounting on an S7-1500 standard rail	
Mean time between failure (MTBF)		
MTBF (EN/IEC 61709; 40 °C)	> 37 years	

[1] Note the wiring rules (Page 83).

[2] Depending on which pluggable transceiver you use, the maximum ambient temperature can change, see section "Accessories", "SFP transceiver (Page 37)".

9.4 Technical specifications of SCALANCE XC206-2G PoE (54 V)

The following technical specifications apply to the SCALANCE XC206-2G PoE (54 V).

Technical specifications		
Connection to Industrial Ethernet		
Electrical connectors	Quantity	6
	Connector	RJ45 jack
	Properties	Half/full duplex, MDI-X pinning
	Transmission speed	10 / 100 / 1000 Mbps
Slots for pluggable transceivers	Quantity	2
	Connector	SFP transceivers (LC port)
	Transmission speed	1000 / 10000 Mbps 100 Mbps also possible via active SFPs
Diagnostics interface		
Serial interface	Quantity	1
	Connector	RJ-11 jack
Electrical data		
Power supply [1)]	Rated voltage	54 V DC
	Voltage range (incl. tolerance)	52 to 57 V DC Safe Extra Low Voltage (SELV)
	Design	Terminal block, 4 terminals
	Properties	Implemented redundantly
Current consumption	At 52 V DC	Max. 5 A
Effective Power	At max PoE load	Max. 260 W
Thermal Design Power		Max. 10 W
Overvoltage category		CAT II
Fusing	Basic device	2.5 A / 125 V
	PoE consumers	15 A / 125 V
PoE power per device	At 54 V	240 W
Signaling contact [1)]	Quantity	1
	Design	Terminal block, 2 terminals
	Permitted voltage range	54 V DC
	Load capability	max. 100 mA
Permitted ambient conditions		

Technical specifications		
Ambient temperature [2]	During LAN operation with RJ45 connector with max. PoE load up to 2000 m above sea level	During operation in horizontal installation position: -40 °C to +60 °C During operation in a different installation position: -40 °C to +50 °C
	When operating with pluggable transceivers of the types: • [-] Standard version • LD Up to 2000 m above sea level	During operation in horizontal installation position: -40 °C to +60 °C During operation in a different installation position: -40 °C to +50 °C
	When operating with pluggable transceivers of the types: • LH • LH+ • ELH • SFP992-1+ Up to 2000 m above sea level	During operation in horizontal installation position: -40 °C to +55 °C During operation in a different installation position: -40 °C to +50 °C
	During storage	-40 °C to +85 °C
	During transportation	-40 °C to +85 °C
Relative humidity	During operation at 25 °C	≤ 95% without condensation
Housing, dimensions and weight		
Design	compact	
Housing material	Basic housing	Die cast aluminum, powder coated
	Front cover	Polycarbonate (PC-GF10)
Degree of protection	IP20	
Dimensions (W x H x D)	60 x 147 x 125 mm	
Weight	540 g	
Installation options	• Wall mounting • Installation on a DIN rail • Mounting on an S7-300 standard rail • Mounting on an S7-1500 standard rail	
Mean time between failure (MTBF)		
MTBF (EN/IEC 61709; 40 °C)	> 42.8 years	

[1] Note the wiring rules (Page 83).

[2] Depending on which pluggable transceiver you use, the maximum ambient temperature can change, see section "Accessories", "SFP transceiver (Page 37)".

9.5 Technical specifications of SCALANCE XC206-2G PoE EEC (54 V)

The following technical specifications apply to the SCALANCE XC206-2G PoE EEC (54 V).

Technical specifications		
Connection to Industrial Ethernet		
Electrical connectors	Quantity	6
	Connector	RJ45 jack
	Properties	Half/full duplex, MDI-X pinning
	Transmission speed	10 / 100 / 1000 Mbps
Slots for pluggable transceivers	Quantity	2
	Connector	SFP transceivers (LC port)
	Transmission speed	1000 / 10000 Mbps 100 Mbps also possible via active SFPs
Diagnostics interface		
Serial interface	Quantity	1
	Connector	RJ-11 jack
Electrical data		
Power supply [1)]	Rated voltage	54 V DC
	Voltage range (incl. tolerance)	52 to 57 V DC Safe Extra Low Voltage (SELV)
	Design	Terminal block, 4 terminals
	Properties	Implemented redundantly
Current consumption	At 52 V DC	Max. 5 A
Effective Power	At max PoE load	Max. 260 W
Thermal Design Power		Max. 10 W
Overvoltage category		CAT II
Fusing	Basic device	2.5 A / 125 V
	PoE consumers	15 A / 125 V
PoE power per device	At 54 V	240 W
Signaling contact [1)]	Quantity	1
	Design	Terminal block, 2 terminals
	Permitted voltage range	54 V DC
	Load capability	max. 100 mA
Permitted ambient conditions		

Technical specifications		
Ambient temperature [2]	During LAN operation with RJ45 connector with max. PoE load up to 2000 m above sea level	During operation in horizontal installation position: -40 °C to +60 °C During operation in a different installation position: -40 °C to +50 °C
	When operating with pluggable transceivers of the types: • [-] Standard version • LD Up to 2000 m above sea level	During operation in horizontal installation position: -40 °C to +60 °C During operation in a different installation position: -40 °C to +50 °C
	When operating with pluggable transceivers of the types: • LH • LH+ • ELH • SFP992-1+ Up to 2000 m above sea level	During operation in horizontal installation position: -40 °C to +55 °C During operation in a different installation position: -40 °C to +50 °C
	With operation between 2000 m and 3000 m above sea level	The maximum ambient temperature is reduced by 5 °C [3]
	With operation between 3000 m and 4000 m above sea level	The maximum ambient temperature is reduced by 10 °C [3]
	During storage	-40 °C to +85 °C
	During transportation	-40 °C to +85 °C
Relative humidity	During operation at 25 °C	≤ 95% without condensation
Housing, dimensions and weight		
Design	compact	
Housing material	Basic housing	Die cast aluminum, powder coated
	Front cover	Polycarbonate (PC-GF10)
Properties	Coated printed circuit board (conformal coating)	
Degree of protection	IP20	
Dimensions (W x H x D)	60 x 147 x 125 mm	
Weight	540 g	
Installation options	• Wall mounting • Installation on a DIN rail • Mounting on an S7-300 standard rail • Mounting on an S7-1500 standard rail	
Mean time between failure (MTBF)		
MTBF (EN/IEC 61709; 40 °C)	> 42.8 years	

[1] **Wiring rules**

Observe the wiring rules (Page 83).

[2] **Ambient temperature with SFP**

The maximum ambient temperature during operation depends on the operating elevation and the installed pluggable transceivers, see also the section "SFP transceiver (Page 37)" in the "Accessories" section.

[3] **Derating**

The derating values depend on the maximum ambient temperatures during operation up to 2000 m.

9.6 Technical specifications SCALANCE XC206-2SFP

The following technical specifications apply to the SCALANCE XC206-2SFP.

Technical specifications			
Connection to Industrial Ethernet			
Electrical connectors	Quantity		6
	Connector		RJ-45 jack
	Properties		Half/full duplex, MDI-X pinning
	Transmission speed		10 / 100 Mbps
Slots for pluggable transceivers	Quantity		2
	Connector		SFP transceivers (LC port)
	Transmission speed		100 / 1000 Mbps
Diagnostics interface			
Serial interface	Quantity		1
	Connector		RJ-11 jack
Electrical data			
Power supply [1]	Rated voltage		12 to 24 V DC
	Voltage range (incl. tolerance)		9.6 to 31.2 V DC Safe Extra Low Voltage (SELV)
	Design		Terminal block, 4 terminals
	Properties		Implemented redundantly; The connected power supply must meet the requirements of NEC Class 2.
Current consumption	12 VDC	Without SFP	400 mA
		With SFP [2]	500 mA
	24 VDC	Without SFP	200 mA
		With SFP [2]	250 mA
Effective power loss		Without SFP	4.8 W
		With SFP [2]	6 W
Overvoltage category			CAT II
Fusing			2.5 A / 125 V
Signaling contact [1]	Quantity		1
	Design		Terminal block, 2 terminals
	Permitted voltage range		24 VDC
	Load capability		max. 100 mA
Permitted ambient conditions			

Technical specifications		
Ambient temperature [3]	During LAN operation with RJ45 connector up to 2000 m above sea level	During operation in horizontal installation position: -40 °C to +70 °C During operation in a different installation position: -40 °C to +70 °C
	When operating with pluggable transceivers of the types: • [-] Standard version • LD Up to 2000 m above sea level	During operation in horizontal installation position: -40 °C to +70 °C During operation in a different installation position: -40 °C to +60 °C
	When operating with pluggable transceivers of the types: • LH • LH+ • ELH • ELH200 • SFP992-1+ Up to 2000 m above sea level	During operation in horizontal installation position: -40 °C to +65 °C During operation in a different installation position: -40 °C to +60 °C
	During storage	-40 °C to +85 °C
	During transportation	-40 °C to +85 °C
Relative humidity	During operation at 25 °C	≤ 95% without condensation
Housing, dimensions and weight		
Design	compact	
Housing material	Basic housing	Die cast aluminum, powder coated
	Front cover	Polycarbonate (PC-GF10)
Degree of protection	IP20	
Dimensions (W x H x D)	60 x 147 x 125 mm	
Weight	520 g	
Installation options	• Wall mounting • Installation on a DIN rail • Mounting on an S7-300 standard rail • Mounting on an S7-1500 standard rail	
Mean time between failure (MTBF)		
MTBF (EN/IEC 61709; 40 °C)	> 47 years	

[1] Note the wiring rules (Page 83).

[2] Detected with the SFP992-1ELH. You will find the precise values in the operating instructions of the pluggable transceivers, see the section "Introduction", Additional documentation (Page 7).

[3] Depending on which pluggable transceiver you use, the maximum ambient temperature can change, see section "Accessories", "SFP transceiver (Page 37)".

9.7 Technical specifications of SCALANCE XC206-2SFP G

The following technical specifications apply to SCALANCE XC206-2SFP G.

Technical specifications			
Connection to Industrial Ethernet			
Electrical connectors	Quantity		6
	Connector		RJ45 jack
	Properties		Half/full duplex, MDI-X pinning
	Transmission speed		10 / 100 / 1000 Mbps
Slots for pluggable transceivers	Quantity		2
	Connector		SFP transceivers (LC port)
	Transmission speed		1000 Mbps 100 Mbps also possible via active SFPs
Diagnostics interface			
Serial interface	Quantity		1
	Connector		RJ-11 jack
Electrical data			
Power supply [1]	Rated voltage		12 to 24 V DC
	Voltage range (incl. tolerance)		9.6 to 31.2 V DC Safe Extra Low Voltage (SELV)
	Design		Terminal block, 4 terminals
	Properties		Implemented redundantly; The connected power supply must meet the requirements of NEC Class 2.
Current consumption	12 VDC	Without SFP	400 mA
		With SFP [2]	500 mA
	24 V DC	Without SFP	200 mA
		With SFP [2]	250 mA
Effective power loss		Without SFP	4.8 W
		With SFP [2]	6 W
Overvoltage category			CAT II
Fusing			2.5 A / 125 V
Signaling contact [1]	Quantity		1
	Design		Terminal block, 2 terminals
	Permitted voltage range		24 V DC
	Load capability		max. 100 mA
Permitted ambient conditions			

Technical specifications		
Ambient temperature [3]	During LAN operation with RJ45 connector up to 2000 m above sea level	During operation in horizontal installation position: -40 °C to +70 °C During operation in a different installation position: -40 °C to +70 °C
	When operating with pluggable transceivers of the types: • [-] Standard version • LD Up to 2000 m above sea level	During operation in horizontal installation position: -40 °C to +65 °C During operation in a different installation position: -40 °C to +60 °C
	When operating with pluggable transceivers of the types: • LH • LH+ • ELH • SFP992-1+ Up to 2000 m above sea level	During operation in horizontal installation position: -40 °C to +60 °C During operation in a different installation position: -40 °C to +60 °C
	During storage	-40 °C to +85 °C
	During transportation	-40 °C to +85 °C
Relative humidity	During operation at 25 °C	≤ 95% without condensation
Housing, dimensions and weight		
Design	compact	
Housing material	Basic housing	Die cast aluminum, powder coated
	Front cover	Polycarbonate (PC-GF10)
Degree of protection	IP20	
Dimensions (W x H x D)	60 x 147 x 125 mm	
Weight	520 g	
Installation options	• Wall mounting • Installation on a DIN rail • Mounting on an S7-300 standard rail • Mounting on an S7-1500 standard rail	
Mean time between failure (MTBF)		
MTBF (EN/IEC 61709; 40 °C)	> 55 years	

[1] Note the wiring rules (Page 83).

[2] Detected with the SFP992-1ELH. You will find the precise values in the operating instructions of the pluggable transceivers, see the section "Introduction", Additional documentation (Page 7).

[3] Depending on which pluggable transceiver you use, the maximum ambient temperature can change, see section "Accessories", "SFP transceiver (Page 37)".

9.8 Technical specifications of SCALANCE XC206-2SFP EEC

The following technical specifications apply to SCALANCE XC206-2SFP EEC.

Technical specifications			
Connection to Industrial Ethernet			
Electrical connectors	Quantity		6
	Connector		RJ-45 jack
	Properties		Half/full duplex, MDI-X pinning
	Transmission speed		10 / 100 Mbps
Slots for pluggable transceivers	Quantity		2
	Connector		SFP transceivers (LC port)
	Transmission speed		100 / 1000 Mbps
Diagnostics interface			
Serial interface	Quantity		1
	Connector		RJ-11 jack
Electrical data			
Power supply [1]	Rated voltage		12 to 24 V DC
	Voltage range (incl. tolerance)		9.6 to 31.2 V DC Safe Extra Low Voltage (SELV)
	Design		Terminal block, 4 terminals
	Properties		Implemented redundantly; The connected power supply must meet the requirements of NEC Class 2.
Current consumption	12 VDC	Without SFP	400 mA
		With SFP [2]	500 mA
	24 VDC	Without SFP	200 mA
		With SFP [2]	250 mA
Effective power loss		Without SFP	4.8 W
		With SFP [2]	6 W
Overvoltage category			CAT II
Fusing			2.5 A / 125 V
Signaling contact [1]	Quantity		1
	Design		Terminal block, 2 terminals
	Permitted voltage range		24 VDC
	Load capability		max. 100 mA
Permitted ambient conditions			

Technical specifications		
Ambient temperature [3]	During LAN operation with RJ45 connector up to 2000 m above sea level	During operation in horizontal installation position: -40 °C to +70 °C During operation in a different installation position: -40 °C to +70 °C
	When operating with pluggable transceivers of the types: • [-] Standard version • LD Up to 2000 m above sea level	During operation in horizontal installation position: -40 °C to +70 °C During operation in a different installation position: -40 °C to +60 °C
	When operating with pluggable transceivers of the types: • LH • LH+ • ELH • ELH200 • SFP992-1+ Up to 2000 m above sea level	During operation in horizontal installation position: -40 °C to +65 °C During operation in a different installation position: -40 °C to +60 °C
	With operation between 2000 m and 3000 m above sea level	The maximum ambient temperature is reduced by 5 °C [4]
	With operation between 3000 m and 4000 m above sea level	The maximum ambient temperature is reduced by 10 °C [4]
	During storage	-40 °C to +85 °C
	During transportation	-40 °C to +85 °C
Relative humidity	During operation at 25 °C	≤ 95% without condensation
Housing, dimensions and weight		
Design	compact	
Housing material	Basic housing	Die cast aluminum, powder coated
	Front cover	Polycarbonate (PC-GF10)
Properties	Coated printed circuit board (conformal coating)	
Degree of protection	IP20	
Dimensions (W x H x D)	60 x 147 x 125 mm	
Weight	520 g	
Installation options	• Wall mounting • Installation on a DIN rail • Mounting on an S7-300 standard rail • Mounting on an S7-1500 standard rail	
Mean time between failure (MTBF)		
MTBF (EN/IEC 61709; 40 °C)	> 47 years	

[1] Wiring rules

Observe the wiring rules (Page 83).

[2] Pluggable transceiver

Detected with the SFP992-1ELH. You will find the precise values in the operating instructions of the pluggable transceivers, see the section "Introduction", Additional documentation (Page 7).

[3] Ambient temperature with SFP

The maximum ambient temperature during operation depends on the operating elevation and the installed pluggable transceivers, see also the section "SFP transceiver (Page 37)" in the "Accessories" section.

[4] Derating

The derating values depend on the maximum ambient temperatures during operation up to 2000 m.

9.9 Technical specifications of SCALANCE XC206-2SFP G EEC

The following technical specifications apply to SCALANCE XC206-2SFP G EEC.

Technical specifications			
Connection to Industrial Ethernet			
Electrical connectors	Quantity		6
	Connector		RJ45 jack
	Properties		Half/full duplex, MDI-X pinning
	Transmission speed		10 / 100 / 1000 Mbps
Slots for pluggable transceivers	Quantity		2
	Connector		SFP transceivers (LC port)
	Transmission speed		1000 Mbps 100 Mbps also possible via active SFPs
Diagnostics interface			
Serial interface	Quantity		1
	Connector		RJ-11 jack
Electrical data			
Power supply [1]	Rated voltage		12 to 24 V DC
	Voltage range (incl. tolerance)		9.6 to 31.2 V DC Safe Extra Low Voltage (SELV)
	Design		Terminal block, 4 terminals
	Properties		Implemented redundantly; The connected power supply must meet the requirements of NEC Class 2.
Current consumption	12 VDC	Without SFP	400 mA
		With SFP [2]	500 mA
	24 V DC	Without SFP	200 mA
		With SFP [2]	250 mA
Effective power loss		Without SFP	4.8 W
		With SFP [2]	6 W
Overvoltage category			CAT II
Fusing			2.5 A / 125 V
Signaling contact [1]	Quantity		1
	Design		Terminal block, 2 terminals
	Permitted voltage range		24 V DC
	Load capability		max. 100 mA
Permitted ambient conditions			

Technical specifications		
Ambient temperature [3]	During LAN operation with RJ45 connector up to 2000 m above sea level	During operation in horizontal installation position: -40 °C to +70 °C During operation in a different installation position: -40 °C to +70 °C
	When operating with pluggable transceivers of the types: • [-] Standard version • LD Up to 2000 m above sea level	During operation in horizontal installation position: -40 °C to +65 °C During operation in a different installation position: -40 °C to +60 °C
	When operating with pluggable transceivers of the types: • LH • LH+ • ELH • SFP992-1+ Up to 2000 m above sea level	During operation in horizontal installation position: -40 °C to +60 °C During operation in a different installation position: -40 °C to +60 °C
	With operation between 2000 m and 3000 m above sea level	The maximum ambient temperature is reduced by 5 °C [4]
	With operation between 3000 m and 4000 m above sea level	The maximum ambient temperature is reduced by 10 °C [4]
	During storage	-40 °C to +85 °C
	During transportation	-40 °C to +85 °C
Relative humidity	During operation at 25 °C	≤ 95% without condensation
Housing, dimensions and weight		
Design	compact	
Housing material	Basic housing	Die cast aluminum, powder coated
	Front cover	Polycarbonate (PC-GF10)
Properties	Coated printed circuit board (conformal coating)	
Degree of protection	IP20	
Dimensions (W x H x D)	60 x 147 x 125 mm	
Weight	520 g	
Installation options	• Wall mounting • Installation on a DIN rail • Mounting on an S7-300 standard rail • Mounting on an S7-1500 standard rail	
Mean time between failure (MTBF)		
MTBF (EN/IEC 61709; 40 °C)	> 55 years	

[1] **Wiring rules**

Observe the wiring rules (Page 83).

[2] **Pluggable transceiver**

Detected with the SFP992-1ELH. You will find the precise values in the operating instructions of the pluggable transceivers, see the section "Introduction", Additional documentation (Page 7).

[3] **Ambient temperature with SFP**

The maximum ambient temperature during operation depends on the operating elevation and the installed pluggable transceivers, see also the section "SFP transceiver (Page 37)" in the "Accessories" section.

[4] **Derating**

The derating values depend on the maximum ambient temperatures during operation up to 2000 m.

9.10 Technical specifications of the SCALANCE XC208

The following technical specifications apply to the SCALANCE XC208.

Technical specifications		
Connection to Industrial Ethernet		
Electrical connectors	Quantity	8
	Connector	RJ-45 jack
	Properties	Half/full duplex, MDI-X pinning
	Transmission speed	10 / 100 Mbps
Diagnostics interface		
Serial interface	Quantity	1
	Connector	RJ-11 jack
Electrical data		
Power supply [1)]	Rated voltage	12 to 24 V DC
	Voltage range (incl. tolerance)	9.6 to 31.2 V DC Safe Extra Low Voltage (SELV)
	Design	Terminal block, 4 terminals
	Property	Implemented redundantly; The connected power supply must meet the requirements of NEC Class 2.
Current consumption	12 VDC	350 mA
	24 VDC	175 mA
Effective power loss		4.2 W
Overvoltage category		CAT II
Fusing		2.5 A / 125 V
Signaling contact [1)]	Quantity	1
	Design	Terminal block, 2 terminals
	Permitted voltage range	24 VDC
	Load capability	max. 100 mA
Permitted ambient conditions		
Ambient temperature	With operation up to 2000 m above sea level	During operation in horizontal installation position: -40 °C to +70 °C During operation in a different installation position: -40 °C to +70 °C
	During storage	-40 °C to +85 °C
	During transportation	-40 °C to +85 °C
Relative humidity	During operation at 25 °C	≤ 95% without condensation
Housing, dimensions and weight		
Design	compact	
Housing material	Basic housing	Die cast aluminum, powder coated
	Front cover	Polycarbonate (PC-GF10)
Degree of protection	IP20	

Technical specifications	
Dimensions (W x H x D)	60 x 147 x 125 mm
Weight	520 g
Installation options	• Wall mounting • Installation on a DIN rail • Mounting on an S7-300 standard rail • Mounting on an S7-1500 standard rail
Mean time between failure (MTBF)	
MTBF (EN/IEC 61709; 40 °C)	> 48 years

[1] Note the wiring rules (Page 83).

9.11 Technical specifications of SCALANCE XC208G

The following technical specifications apply to SCALANCE XC208G.

Technical specifications		
Connection to Industrial Ethernet		
Electrical connectors	Quantity	8
	Connector	RJ-45 jack
	Properties	Half/full duplex, MDI-X pinning
	Transmission speed	10 / 100 / 1000 Mbps
Diagnostics interface		
Serial interface	Quantity	1
	Connector	RJ-11 jack
Electrical data		
Power supply [1)]	Rated voltage	12 to 24 V DC
	Voltage range (incl. tolerance)	9.6 to 31.2 V DC Safe Extra Low Voltage (SELV)
	Design	Terminal block, 4 terminals
	Property	Implemented redundantly; The connected power supply must meet the requirements of NEC Class 2.
Current consumption	12 VDC	400 mA
	24 VDC	200 mA
Effective power loss		4.3 W
Overvoltage category		CAT II
Fusing		2.5 A / 125 V
Signaling contact [1)]	Quantity	1
	Design	Terminal block, 2 terminals
	Permitted voltage range	24 VDC
	Load capability	max. 100 mA
Permitted ambient conditions		
Ambient temperature	With operation up to 2000 m above sea level	During operation in horizontal installation position: -40 °C to +70 °C During operation in a different installation position: -40 °C to +70 °C
	During storage	-40 °C to +85 °C
	During transportation	-40 °C to +85 °C
Relative humidity	During operation at 25 °C	≤ 95% without condensation
Housing, dimensions and weight		
Design	compact	
Housing material	Basic housing	Die cast aluminum, powder coated
	Front cover	Polycarbonate (PC-GF10)
Degree of protection	IP20	

Technical specifications	
Dimensions (W x H x D)	60 x 147 x 125 mm
Weight	520 g
Installation options	• Wall mounting • Installation on a DIN rail • Mounting on an S7-300 standard rail • Mounting on an S7-1500 standard rail
Mean time between failure (MTBF)	
MTBF (EN/IEC 61709; 40 °C)	> 54 years

[1] Note the wiring rules (Page 83).

9.12 Technical specifications of SCALANCE XC208G PoE

The following technical specifications apply to SCALANCE XC208G PoE.

Technical specifications		
Connection to Industrial Ethernet		
Electrical connectors	Quantity	8
	Connector	RJ45 jack
	Properties	Half/full duplex, MDI-X pinning
	Transmission speed	10 / 100 / 1000 Mbps
Diagnostics interface		
Serial interface	Quantity	1
	Connector	RJ-11 jack
Electrical data		
Power supply [1)]	Rated voltage	24 V DC
	Voltage range (incl. tolerance)	19.2 to 31.2 V DC Safe Extra Low Voltage (SELV)
	Design	Terminal block, 4 terminals
	Property	Implemented redundantly
Current consumption	At 19.2 V DC	Max. 7.5 A
Effective Power	At max PoE load	Max. 144 W
Thermal Design Power		Max. 18 W
Overvoltage category		CAT II
Fusing	Basic device	2.5 A / 125 V
	PoE consumers	15 A / 125 V
PoE power per device	At 24 V DC	In horizontal installation position: 120 W In other installation position: 90 W
Signaling contact [1)]	Quantity	1
	Design	Terminal block, 2 terminals
	Permitted voltage range	24 VDC
	Load capability	Max. 100 mA
Permitted ambient conditions		
Ambient temperature	With operation with max. PoE load up to 2000 m above sea level	During operation in horizontal installation position: -40 °C to +60 °C During operation in a different installation position: -40 °C to +50 °C
	During storage	-40 °C to +85 °C
	During transportation	-40 °C to +85 °C
Relative humidity	During operation at 25 °C	≤ 95% without condensation
Housing, dimensions and weight		
Design	Compact	

Technical specifications		
Housing material	Basic housing	Die cast aluminum, powder coated
	Front cover	Polycarbonate (PC-GF10)
Degree of protection	IP20	
Dimensions (W x H x D)	100 x 147 x 125 mm	
Weight	955 g	
Installation options	• Wall mounting • Installation on a DIN rail • Mounting on an S7-300 standard rail • Mounting on an S7-1500 standard rail	
Mean time between failure (MTBF)		
MTBF (EN/IEC 61709; 40 °C)	> 37.3 years	

[1] Note the wiring rules (Page 83).

9.13 Technical specifications of SCALANCE XC208G PoE (54 V)

The following technical specifications apply to SCALANCE XC208G PoE (54 V).

Technical specifications		
Connection to Industrial Ethernet		
Electrical connectors	Quantity	8
	Connector	RJ45 jack
	Properties	Half/full duplex, MDI-X pinning
	Transmission speed	10 / 100 / 1000 Mbps
Diagnostics interface		
Serial interface	Quantity	1
	Connector	RJ-11 jack
Electrical data		
Power supply [1)]	Rated voltage	54 V DC
	Voltage range (incl. tolerance)	52 to 57 V DC Safe Extra Low Voltage (SELV)
	Design	Terminal block, 4 terminals
	Property	Implemented redundantly
Current consumption	At 52 V DC	Max. 5 A
Effective Power	At max PoE load	Max. 260 W
Thermal Design Power		Max. 10 W
Overvoltage category		CAT II
Fusing	Basic device	2.5 A / 125 V
	PoE consumers	15 A / 125 V
PoE power per device	At 54 V	240 W
Signaling contact [1)]	Quantity	1
	Design	Terminal block, 2 terminals
	Permitted voltage range	54 V DC
	Load capability	max. 100 mA
Permitted ambient conditions		
Ambient temperature	With operation with max. PoE load up to 2000 m above sea level	During operation in horizontal installation position: -40 °C to +60 °C During operation in a different installation position: -40 °C to +50 °C
	During storage	-40 °C to +85 °C
	During transportation	-40 °C to +85 °C
Relative humidity	During operation at 25 °C	≤ 95% without condensation
Housing, dimensions and weight		
Design	compact	
Housing material	Basic housing	Die cast aluminum, powder coated
	Front cover	Polycarbonate (PC-GF10)
Degree of protection	IP20	

Technical specifications	
Dimensions (W x H x D)	60 x 147 x 125 mm
Weight	540 g
Installation options	• Wall mounting • Installation on a DIN rail • Mounting on an S7-300 standard rail • Mounting on an S7-1500 standard rail
Mean time between failure (MTBF)	
MTBF (EN/IEC 61709; 40 °C)	> 42.6 years

[1] Note the wiring rules (Page 83).

9.14 Technical specifications of SCALANCE XC208EEC

The following technical specifications apply to SCALANCE XC208EEC.

Technical specifications		
Connection to Industrial Ethernet		
Electrical connectors	Quantity	8
	Connector	RJ-45 jack
	Properties	Half/full duplex, MDI-X pinning
	Transmission speed	10 / 100 Mbps
Diagnostics interface		
Serial interface	Quantity	1
	Connector	RJ-11 jack
Electrical data		
Power supply [1]	Rated voltage	12 to 24 V DC
	Voltage range (incl. tolerance)	9.6 to 31.2 V DC Safe Extra Low Voltage (SELV)
	Design	Terminal block, 4 terminals
	Property	Implemented redundantly; The connected power supply must meet the requirements of NEC Class 2.
Current consumption	12 VDC	350 mA
	24 VDC	175 mA
Effective power loss		4.2 W
Overvoltage category		CAT II
Fusing		2.5 A / 125 V
Signaling contact [1]	Quantity	1
	Design	Terminal block, 2 terminals
	Permitted voltage range	24 VDC
	Load capability	max. 100 mA
Permitted ambient conditions		
Ambient temperature	With operation up to 2000 m above sea level	During operation in horizontal installation position: -40 °C to +70 °C During operation in a different installation position: -40 °C to +70 °C
	With operation between 2000 m and 3000 m above sea level	The maximum ambient temperature is reduced by 5 °C [2]
	With operation between 3000 m and 4000 m above sea level	The maximum ambient temperature is reduced by 10 °C [2]
	During storage	-40 °C to +85 °C
	During transportation	-40 °C to +85 °C
Relative humidity	During operation at 25 °C	≤ 95% without condensation
Housing, dimensions and weight		
Design	compact	

Technical specifications		
Housing material	Basic housing	Die cast aluminum, powder coated
	Front cover	Polycarbonate (PC-GF10)
Properties	Coated printed circuit board (conformal coating)	
Degree of protection	IP20	
Dimensions (W x H x D)	60 x 147 x 125 mm	
Weight	520 g	
Installation options	• Wall mounting • Installation on a DIN rail • Mounting on an S7-300 standard rail • Mounting on an S7-1500 standard rail	
Mean time between failure (MTBF)		
MTBF (EN/IEC 61709; 40 °C)	> 48 years	

[1] Note the wiring rules (Page 83).

[2] The derating values depend on the maximum ambient temperatures during operation up to 2000 m.

9.15 Technical specifications of SCALANCE XC208G EEC

The following technical specifications apply to SCALANCE XC208G EEC.

Technical specifications		
Connection to Industrial Ethernet		
Electrical connectors	Quantity	8
	Connector	RJ-45 jack
	Properties	Half/full duplex, MDI-X pinning
	Transmission speed	10 / 100 / 1000 Mbps
Diagnostics interface		
Serial interface	Quantity	1
	Connector	RJ-11 jack
Electrical data		
Power supply [1]	Rated voltage	12 to 24 V DC
	Voltage range (incl. tolerance)	9.6 to 31.2 V DC Safe Extra Low Voltage (SELV)
	Design	Terminal block, 4 terminals
	Property	Implemented redundantly; The connected power supply must meet the requirements of NEC Class 2.
Current consumption	12 VDC	400 mA
	24 VDC	200 mA
Effective power loss		4.3 W
Overvoltage category		CAT II
Fusing		2.5 A / 125 V
Signaling contact [1]	Quantity	1
	Design	Terminal block, 2 terminals
	Permitted voltage range	24 VDC
	Load capability	max. 100 mA
Permitted ambient conditions		
Ambient temperature	With operation up to 2000 m above sea level	During operation in horizontal installation position: -40 °C to +70 °C During operation in a different installation position: -40 °C to +70 °C
	With operation between 2000 m and 3000 m above sea level	The maximum ambient temperature is reduced by 5 °C [2]
	With operation between 3000 m and 4000 m above sea level	The maximum ambient temperature is reduced by 10 °C [2]
	During storage	-40 °C to +85 °C
	During transportation	-40 °C to +85 °C
Relative humidity	During operation at 25 °C	≤ 95% without condensation
Housing, dimensions and weight		
Design	compact	

Technical specifications		
Housing material	Basic housing	Die cast aluminum, powder coated
	Front cover	Polycarbonate (PC-GF10)
Properties	Coated printed circuit board (conformal coating)	
Degree of protection	IP20	
Dimensions (W x H x D)	60 x 147 x 125 mm	
Weight	520 g	
Installation options	• Wall mounting • Installation on a DIN rail • Mounting on an S7-300 standard rail • Mounting on an S7-1500 standard rail	
Mean time between failure (MTBF)		
MTBF (EN/IEC 61709; 40 °C)	> 54 years	

[1] Note the wiring rules (Page 83).

[2] The derating values depend on the maximum ambient temperatures during operation up to 2000 m.

9.16 Technical specifications of the SCALANCE XC216

The following technical specifications apply to the SCALANCE XC216.

Technical specifications		
Connection to Industrial Ethernet		
Electrical connectors	Quantity	16
	Connector	RJ-45 jack
	Properties	Half/full duplex, MDI-X pinning
	Transmission speed	10 / 100 Mbps
Diagnostics interface		
Serial interface	Quantity	1
	Connector	RJ-11 jack
Electrical data		
Power supply [1)]	Rated voltage	12 to 24 V DC
	Voltage range (incl. tolerance)	9.6 to 31.2 V DC Safe Extra Low Voltage (SELV)
	Design	Terminal block, 4 terminals
	Properties	Implemented redundantly; The connected power supply must meet the requirements of NEC Class 2.
Current consumption	12 VDC	550 mA
	24 VDC	275 mA
Effective power loss		6.6 W
Overvoltage category		CAT II
Fusing		2.5 A / 125 V
Signaling contact [1)]	Quantity	1
	Design	Terminal block, 2 terminals
	Permitted voltage range	24 VDC
	Load capability	max. 100 mA
Permitted ambient conditions		
Ambient temperature	With operation up to 2000 m above sea level	During operation in horizontal installation position: -40 °C to +70 °C During operation in a different installation position: -40 °C to +70 °C
	During storage	-40 °C to +85 °C
	During transportation	-40 °C to +85 °C
Relative humidity	During operation at 25 °C	≤ 95% without condensation
Housing, dimensions and weight		
Design	compact	
Housing material	Basic housing	Die cast aluminum, powder coated
	Front cover	Polycarbonate (PC-GF10)
Degree of protection	IP20	

Technical specifications	
Dimensions (W x H x D)	120 x 147 x 125 mm
Weight	800 g
Installation options	• Wall mounting • Installation on a DIN rail • Mounting on an S7-300 standard rail • Mounting on an S7-1500 standard rail
Mean time between failure (MTBF)	
MTBF (EN/IEC 61709; 40 °C)	> 48 years

[1] Note the wiring rules (Page 83).

9.17 Technical specifications of SCALANCE XC216EEC

The following technical specifications apply to SCALANCE XC216EEC.

Technical specifications		
Connection to Industrial Ethernet		
Electrical connectors	Quantity	16
	Connector	RJ-45 jack
	Properties	Half/full duplex, MDI-X pinning
	Transmission speed	10 / 100 Mbps
Diagnostics interface		
Serial interface	Quantity	1
	Connector	RJ-11 jack
Electrical data		
Power supply [1]	Rated voltage	12 to 24 V DC
	Voltage range (incl. tolerance)	9.6 to 31.2 V DC Safe Extra Low Voltage (SELV)
	Design	Terminal block, 4 terminals
	Properties	Implemented redundantly; The connected power supply must meet the requirements of NEC Class 2.
Current consumption	12 VDC	550 mA
	24 VDC	275 mA
Effective power loss		6.6 W
Overvoltage category		CAT II
Fusing		2.5 A / 125 V
Signaling contact [1]	Quantity	1
	Design	Terminal block, 2 terminals
	Permitted voltage range	24 VDC
	Load capability	max. 100 mA
Permitted ambient conditions		
Ambient temperature	With operation up to 2000 m above sea level	During operation in horizontal installation position: -40 °C to +70 °C During operation in a different installation position: -40 °C to +70 °C
	With operation between 2000 m and 3000 m above sea level	The maximum ambient temperature is reduced by 5 °C [2]
	With operation between 3000 m and 4000 m above sea level	The maximum ambient temperature is reduced by 10 °C [2]
	During storage	-40 °C to +85 °C
	During transportation	-40 °C to +85 °C
Relative humidity	During operation at 25 °C	≤ 95% without condensation
Housing, dimensions and weight		
Design	compact	

Technical specifications		
Housing material	Basic housing	Die cast aluminum, powder coated
	Front cover	Polycarbonate (PC-GF10)
Properties	Coated printed circuit board (conformal coating)	
Degree of protection	IP20	
Dimensions (W x H x D)	120 x 147 x 125 mm	
Weight	800 g	
Installation options	• Wall mounting • Installation on a DIN rail • Mounting on an S7-300 standard rail • Mounting on an S7-1500 standard rail	
Mean time between failure (MTBF)		
MTBF (EN/IEC 61709; 40 °C)	> 48 years	

[1] Note the wiring rules (Page 83).

[2] The derating values depend on the maximum ambient temperatures during operation up to 2000 m.

9.18 Technical specifications of SCALANCE XC216-3G PoE

The following technical specifications apply to SCALANCE XC216-3G PoE.

Technical specifications			
Connection to Industrial Ethernet			
Electrical connectors	Quantity		16
	Connector		RJ45 jack
	Properties		Half/full duplex, MDI-X pinning
	Transmission speed		10 / 100 / 1000 Mbps
Slots for pluggable transceivers	Quantity		3
	Connector		SFP transceivers (LC port)
	Transmission speed	Port P1	1000 Mbps 100 Mbps also possible via active SFPs
		Port P2 and P2	1000 / 10000 Mbps 100 Mbps also possible via active SFPs
Diagnostics interface			
Serial interface	Quantity		1
	Connector		RJ-11 jack
Electrical data			
Power supply [1]	Rated voltage		24 V DC
	Voltage range (incl. tolerance)		19.2 to 31.2 V DC Safe Extra Low Voltage (SELV)
	Design		Terminal block, 4 terminals
	Properties		Implemented redundantly
Current consumption	At 19.2 V DC		Max. 7.8 A

Technical specifications		
Effective Power	At max PoE load	Max. 150 W
Thermal Design Power		Max. 28 W
Overvoltage category		CAT II
Fusing	Basic device	2.5 A / 125 V
	PoE consumers	15 A / 125 V
PoE power per device	At 24 V DC	With horizontal mounting position and operation without pluggable transceiver: • 120 W In other installation position: • 90 W
Signaling contact [1]	Quantity	1
	Design	Terminal block, 2 terminals
	Permitted voltage range	24 V DC
	Load capability	Max. 100 mA
Permitted ambient conditions		
Ambient temperature [2]	During LAN operation with RJ45 connector with max. PoE load up to 2000 m above sea level	During operation in horizontal installation position: • -40 °C to +60 °C During operation in a different installation position: • -40 °C to +50 °C
	When operating with pluggable transceivers of the types: • [-] Standard version • LD Up to 2000 m above sea level	During operation in horizontal installation position: • -40 °C to +60 °C • Max. PoE power: 90 W During operation in a different installation position: • -40 °C to +50 °C • Max. PoE power: 60 W
	When operating with pluggable transceivers of the types: • LH • LH+ • ELH • SFP992-1+ Up to 2000 m above sea level	During operation in horizontal installation position: • -40 °C to +55 °C • Max. PoE power: 90 W Other mounting positions are not permitted.
	During storage	-40 °C to +85 °C
	During transportation	-40 °C to +85 °C
Relative humidity	During operation at 25 °C	≤ 95% without condensation
Housing, dimensions and weight		
Design	Compact	
Housing material	Basic housing	Die cast aluminum, powder coated
	Front cover	Polycarbonate (PC-GF10)

Technical specifications	
Degree of protection	IP20
Dimensions (W x H x D)	180 x 147 x 125 mm
Weight	1560 g
Installation options	• Installation on a DIN rail • Mounting on an S7-300 standard rail • Mounting on an S7-1500 standard rail
Mean time between failure (MTBF)	
MTBF (EN/IEC 61709; 40 °C)	> 24.6 years

[1] Note the wiring rules (Page 83).

[2] Depending on which pluggable transceiver you use, the maximum ambient temperature can change, see section "Accessories", "SFP transceiver (Page 37)".

9.19 Technical specifications of SCALANCE XC216-3G PoE (54 V)

The following technical specifications apply to SCALANCE XC216-3G PoE (54 V).

Technical specifications			
Connection to Industrial Ethernet			
Electrical connectors	Quantity		16
	Connector		RJ45 jack
	Properties		Half/full duplex, MDI-X pinning
	Transmission speed		10 / 100 / 1000 Mbps
Slots for pluggable transceivers	Quantity		3
	Connector		SFP transceivers (LC port)
	Transmission speed	Port P1	1000 Mbps 100 Mbps also possible via active SFPs
		Port P2 and P2	1000 / 10000 Mbps 100 Mbps also possible via active SFPs
Diagnostics interface			
Serial interface	Quantity		1
	Connector		RJ-11 jack
Electrical data			
Power supply [1]	Rated voltage		54 V DC
	Voltage range (incl. tolerance)		52 to 57 V DC Safe Extra Low Voltage (SELV)
	Design		Terminal block, 4 terminals
	Properties		Implemented redundantly
Current consumption	At 52 V DC		Max. 6.5 A
Effective Power	At max PoE load		Max. 338 W
Thermal Design Power			Max. 28 W
Overvoltage category			CAT II

Technical specifications		
Fusing	Basic device	2.5 A / 125 V
	PoE consumers	15 A / 125 V
PoE power per device	At 54 V	300 W
Signaling contact [1]	Quantity	1
	Design	Terminal block, 2 terminals
	Permitted voltage range	54 V DC
	Load capability	max. 100 mA
Permitted ambient conditions		
Ambient temperature [2]	During LAN operation with RJ45 connector with max. PoE load up to 2000 m above sea level	During operation in horizontal installation position: -40 °C to +60 °C During operation in a different installation position: -40 °C to +50 °C
	When operating with pluggable transceivers of the types: • [-] Standard version • LD Up to 2000 m above sea level	During operation in horizontal installation position: -40 °C to +60 °C During operation in a different installation position: -40 °C to +50 °C
	When operating with pluggable transceivers of the types: • LH • LH+ • ELH • SFP992-1+ Up to 2000 m above sea level	During operation in horizontal installation position: -40 °C to +55 °C During operation in a different installation position: -40 °C to +50 °C
	During storage	-40 °C to +85 °C
	During transportation	-40 °C to +85 °C
Relative humidity	During operation at 25 °C	≤ 95% without condensation
Housing, dimensions and weight		
Design	compact	
Housing material	Basic housing	Die cast aluminum, powder coated
	Front cover	Polycarbonate (PC-GF10)
Degree of protection	IP20	
Dimensions (W x H x D)	140 x 147 x 125 mm	
Weight	1140 g	
Installation options	• Installation on a DIN rail • Mounting on an S7-300 standard rail • Mounting on an S7-1500 standard rail	
Mean time between failure (MTBF)		
MTBF (EN/IEC 61709; 40 °C)	> 23 years	

[1] Note the wiring rules (Page 83).

[2] Depending on which pluggable transceiver you use, the maximum ambient temperature can change, see section "Accessories", "SFP transceiver (Page 37)".

9.20 Technical specifications of SCALANCE XC216-4C

The following technical specifications apply to SCALANCE XC216-4C.

Technical specifications				
Connection to Industrial Ethernet				
Electrical connectors		Quantity		12
		Connector		RJ45 jack
		Properties		Half/full duplex, MDI-X pinning
		Transmission speed		10 / 100 Mbps
Combo ports	Quantity			4
	Electrical connectors	Quantity		4
		Connector		RJ45 jack
		Properties		Half/full duplex, MDI-X pinning
		Transmission speed		10 / 100 / 1000 Mbps
	Slots for pluggable transceivers	Quantity		4
		Connector		SFP transceivers (LC port)
		Transmission speed		1000 Mbps 100 Mbps also possible via active SFPs
Diagnostics interface				
Serial interface		Quantity		1
		Connector		RJ-11 jack
Electrical data				
Power supply [1]		Rated voltage		24 V DC
		Voltage range (incl. tolerance)		19.2 to 31.2 V DC Safe Extra Low Voltage (SELV)
		Design		Terminal block, 4 terminals
		Properties		Implemented redundantly; The connected power supply must meet the requirements of NEC Class 2.
Current consumption		24 V DC	Without SFP	450 mA
			With SFP [2]	550 mA
Effective power loss			Without SFP	10.8 W
			With SFP [2]	13.2 W
Overvoltage category				CAT II
Fusing				3.15 A / 125 V
Signaling contact [1]		Quantity		1
		Design		Terminal block, 2 terminals
		Permitted voltage range		24 V DC
		Load capability		max. 100 mA
Permitted ambient conditions				

Technical specifications		
Ambient temperature [3]	During LAN operation with RJ45 connector up to 2000 m above sea level	During operation in horizontal installation position: -40 °C to +70 °C During operation in a different installation position: -40 °C to +70 °C
	When operating with pluggable transceivers of the types: • [-] Standard version • LD Up to 2000 m above sea level	During operation in horizontal installation position: -40 °C to +65 °C During operation in a different installation position: -40 °C to +60 °C
	When operating with pluggable transceivers of the types: • LH • LH+ • ELH • SFP992-1+ Up to 2000 m above sea level	During operation in horizontal installation position: -40 °C to +60 °C During operation in a different installation position: -40 °C to +60 °C
	During storage	-40 °C to +85 °C
	During transportation	-40 °C to +85 °C
Relative humidity	During operation at 25 °C	≤ 95% without condensation
Housing, dimensions and weight		
Design	compact	
Housing material	Basic housing	Die cast aluminum, powder coated
	Front cover	Polycarbonate (PC-GF10)
Degree of protection	IP20	
Dimensions (W x H x D)	140 x 147 x 125 mm	
Weight	1200 g	
Installation options	• Installation on a DIN rail • Mounting on an S7-300 standard rail • Mounting on an S7-1500 standard rail	
Mean time between failure (MTBF)		
MTBF (EN/IEC 61709; 40 °C)	> 46 years	

[1] Note the wiring rules (Page 83).

[2] Detected with the SFP992-1ELH. You will find the precise values in the operating instructions of the pluggable transceivers, see the section "Introduction", Additional documentation (Page 7).

[3] Depending on which pluggable transceiver you use, the maximum ambient temperature can change, see section "Accessories", "SFP transceiver (Page 37)".

9.21 Technical specifications of SCALANCE XC216-4C G

The following technical specifications apply to SCALANCE XC216-4C G.

Technical specifications				
Connection to Industrial Ethernet				
Electrical connectors		Quantity		12
		Connector		RJ45 jack
		Properties		Half/full duplex, MDI-X pinning
		Transmission speed		10 / 100 / 1000 Mbps
Combo ports	Quantity			4
	Electrical connectors	Quantity		4
		Connector		RJ45 jack
		Properties		Half/full duplex, MDI-X pinning
		Transmission speed		10 / 100 / 1000 Mbps
	Slots for pluggable transceivers	Quantity		4
		Connector		SFP transceivers (LC port)
		Transmission speed		1000 Mbps 100 Mbps also possible via active SFPs
Diagnostics interface				
Serial interface		Quantity		1
		Connector		RJ-11 jack
Electrical data				
Power supply [1]		Rated voltage		24 V DC
		Voltage range (incl. tolerance)		19.2 to 31.2 V DC Safe Extra Low Voltage (SELV)
		Design		Terminal block, 4 terminals
		Properties		Implemented redundantly; The connected power supply must meet the requirements of NEC Class 2.
Current consumption		24 V DC	Without SFP	450 mA
			With SFP [2]	550 mA
Effective power loss			Without SFP	10.8 W
			With SFP [2]	13.2 W
Overvoltage category				CAT II
Fusing				3.15 A / 125 V
Signaling contact [1]		Quantity		1
		Design		Terminal block, 2 terminals
		Permitted voltage range		24 V DC
		Load capability		max. 100 mA
Permitted ambient conditions				

Technical specifications		
Ambient temperature [3]	During LAN operation with RJ45 connector up to 2000 m above sea level	During operation in horizontal installation position: -40 °C to +70 °C During operation in a different installation position: -40 °C to +70 °C
	When operating with pluggable transceivers of the types: • [-] Standard version • LD Up to 2000 m above sea level	During operation in horizontal installation position: -40 °C to +65 °C During operation in a different installation position: -40 °C to +60 °C
	When operating with pluggable transceivers of the types: • LH • LH+ • ELH • SFP992-1+ Up to 2000 m above sea level	During operation in horizontal installation position: -40 °C to +60 °C During operation in a different installation position: -40 °C to +60 °C
	During storage	-40 °C to +85 °C
	During transportation	-40 °C to +85 °C
Relative humidity	During operation at 25 °C	≤ 95% without condensation
Housing, dimensions and weight		
Design	compact	
Housing material	Basic housing	Die cast aluminum, powder coated
	Front cover	Polycarbonate (PC-GF10)
Degree of protection	IP20	
Dimensions (W x H x D)	140 x 147 x 125 mm	
Weight	1200 g	
Installation options	• Installation on a DIN rail • Mounting on an S7-300 standard rail • Mounting on an S7-1500 standard rail	
Mean time between failure (MTBF)		
MTBF (EN/IEC 61709; 40 °C)	> 46 years	

[1] Note the wiring rules (Page 83).

[2] Detected with the SFP992-1ELH. You will find the precise values in the operating instructions of the pluggable transceivers, see the section "Introduction", Additional documentation (Page 7).

[3] Depending on which pluggable transceiver you use, the maximum ambient temperature can change, see section "Accessories", "SFP transceiver (Page 37)".

9.22 Technical specifications of SCALANCE XC216-4C G EEC

The following technical specifications apply to SCALANCE XC216-4C G EEC.

Technical specifications				
Connection to Industrial Ethernet				
Electrical connectors		Quantity		12
		Connector		RJ45 jack
		Properties		Half/full duplex, MDI-X pinning
		Transmission speed		10 / 100 / 1000 Mbps
Combo ports	Quantity			4
	Electrical connectors	Quantity		4
		Connector		RJ45 jack
		Properties		Half/full duplex, MDI-X pinning
		Transmission speed		10 / 100 / 1000 Mbps
	Slots for pluggable transceivers	Quantity		4
		Connector		SFP transceivers (LC port)
		Transmission speed		1000 Mbps 100 Mbps also possible via active SFPs
Diagnostics interface				
Serial interface		Quantity		1
		Connector		RJ-11 jack
Electrical data				
Power supply [1]		Rated voltage		24 V DC
		Voltage range (incl. tolerance)		19.2 to 31.2 V DC Safe Extra Low Voltage (SELV)
		Design		Terminal block, 4 terminals
		Properties		Implemented redundantly; The connected power supply must meet the requirements of NEC Class 2.
Current consumption		24 V DC	Without SFP	450 mA
			With SFP [2]	550 mA
Effective power loss			Without SFP	10.8 W
			With SFP [2]	13.2 W
Overvoltage category				CAT II
Fusing				3.15 A / 125 V
Signaling contact [1]		Quantity		1
		Design		Terminal block, 2 terminals
		Permitted voltage range		24 V DC
		Load capability		max. 100 mA
Permitted ambient conditions				

Technical specifications		
Ambient temperature [3]	During LAN operation with RJ45 connector up to 2000 m above sea level	During operation in horizontal installation position: -40 °C to +70 °C During operation in a different installation position: -40 °C to +70 °C
	When operating with pluggable transceivers of the types: • [-] Standard version • LD Up to 2000 m above sea level	During operation in horizontal installation position: -40 °C to +65 °C During operation in a different installation position: -40 °C to +60 °C
	When operating with pluggable transceivers of the types: • LH • LH+ • ELH • SFP992-1+ Up to 2000 m above sea level	During operation in horizontal installation position: -40 °C to +60 °C During operation in a different installation position: -40 °C to +60 °C
	With operation between 2000 m and 3000 m above sea level	The maximum ambient temperature is reduced by 5 °C [4]
	With operation between 3000 m and 4000 m above sea level	The maximum ambient temperature is reduced by 10 °C [4]
	During storage	-40 °C to +85 °C
	During transportation	-40 °C to +85 °C
Relative humidity	During operation at 25 °C	≤ 95% without condensation
Housing, dimensions and weight		
Design	compact	
Housing material	Basic housing	Die cast aluminum, powder coated
	Front cover	Polycarbonate (PC-GF10)
Properties	Coated printed circuit board (conformal coating)	
Degree of protection	IP20	
Dimensions (W x H x D)	140 x 147 x 125 mm	
Weight	1200 g	
Installation options	• Installation on a DIN rail • Mounting on an S7-300 standard rail • Mounting on an S7-1500 standard rail	
Mean time between failure (MTBF)		
MTBF (EN/IEC 61709; 40 °C)	> 46 years	

[1] **Wiring rules**

Observe the wiring rules (Page 83).

[2] Pluggable transceiver

Detected with the SFP992-1ELH. You will find the precise values in the operating instructions of the pluggable transceivers, see the section "Introduction", Additional documentation (Page 7).

[3] Ambient temperature with SFP

The maximum ambient temperature during operation depends on the operating elevation and the installed pluggable transceivers, see also the section "SFP transceiver (Page 37)" in the "Accessories" section.

[4] Derating

The derating values depend on the maximum ambient temperatures during operation up to 2000 m.

9.23 Technical specifications of the SCALANCE XC224

The following technical specifications apply to the SCALANCE XC224.

Technical specifications		
Connection to Industrial Ethernet		
Electrical connectors	Quantity	24
	Connector	RJ-45 jack
	Properties	Half/full duplex, MDI-X pinning
	Transmission speed	10 / 100 Mbps
Diagnostics interface		
Serial interface	Quantity	1
	Connector	RJ-11 jack
Electrical data		
Power supply [1)]	Rated voltage	12 to 24 V DC
	Voltage range (incl. tolerance)	9.6 to 31.2 V DC Safe Extra Low Voltage (SELV)
	Design	Terminal block, 4 terminals
	Property	Implemented redundantly; The connected power supply must meet the requirements of NEC Class 2.
Current consumption	12 VDC	750 mA
	24 VDC	375 mA
Effective power loss		9 W
Overvoltage category		CAT II
Fusing		2.5 A / 125 V
Signaling contact [1)]	Quantity	1
	Design	Terminal block, 2 terminals
	Permitted voltage range	24 VDC
	Load capability	max. 100 mA
Permitted ambient conditions		
Ambient temperature	With operation up to 2000 m above sea level	During operation in horizontal installation position: -40 °C to +70 °C During operation in a different installation position: -40 °C to +70 °C
	During storage	-40 °C to +85 °C
	During transportation	-40 °C to +85 °C
Relative humidity	During operation at 25 °C	≤ 95% without condensation
Housing, dimensions and weight		
Design	compact	
Housing material	Basic housing	Die cast aluminum, powder coated
	Front cover	Polycarbonate (PC-GF10)
Degree of protection	IP20	

Technical specifications	
Dimensions (W x H x D)	120 x 147 x 125 mm
Weight	880 g
Installation options	• Wall mounting • Installation on a DIN rail • Mounting on an S7-300 standard rail • Mounting on an S7-1500 standard rail
Mean time between failure (MTBF)	
MTBF (EN/IEC 61709; 40 °C)	> 41 years

[1] Note the wiring rules (Page 83).

9.24 Technical specifications of SCALANCE XC224-4C G

The following technical specifications apply to SCALANCE XC224-4C G.

Technical specifications				
Connection to Industrial Ethernet				
Electrical connectors		Quantity		20
		Connector		RJ45 jack
		Properties		Half/full duplex, MDI-X pinning
		Transmission speed		10 / 100 / 1000 Mbps
Combo ports	Quantity			4
	Electrical connectors	Quantity		4
		Connector		RJ45 jack
		Properties		Half/full duplex, MDI-X pinning
		Transmission speed		10 / 100 / 1000 Mbps
	Slots for pluggable transceivers	Quantity		4
		Connector		SFP transceivers (LC port)
		Transmission speed		1000 Mbps 100 Mbps also possible via active SFPs
Diagnostics interface				
Serial interface		Quantity		1
		Connector		RJ-11 jack
Electrical data				
Power supply [1]		Rated voltage		24 V DC
		Voltage range (incl. tolerance)		19.2 to 31.2 V DC Safe Extra Low Voltage (SELV)
		Design		Terminal block, 4 terminals
		Properties		Implemented redundantly; The connected power supply must meet the requirements of NEC Class 2.
Current consumption		24 V DC	Without SFP	600 mA
			With SFP [2]	700 mA
Effective power loss			Without SFP	14.4 W
			With SFP [2]	16.8 W
Overvoltage category				CAT II
Fusing				3.15 A / 125 V
Signaling contact [1]		Quantity		1
		Design		Terminal block, 2 terminals
		Permitted voltage range		24 V DC
		Load capability		max. 100 mA
Permitted ambient conditions				

Technical specifications		
Ambient temperature [3]	During LAN operation with RJ45 connector up to 2000 m above sea level	During operation in horizontal installation position: -40 °C to +70 °C During operation in a different installation position: -40 °C to +70 °C
	When operating with pluggable transceivers of the types: • [-] Standard version • LD Up to 2000 m above sea level	During operation in horizontal installation position: -40 °C to +65 °C During operation in a different installation position: -40 °C to +60 °C
	When operating with pluggable transceivers of the types: • LH • LH+ • ELH • SFP992-1+ Up to 2000 m above sea level	During operation in horizontal installation position: -40 °C to +60 °C During operation in a different installation position: -40 °C to +60 °C
	During storage	-40 °C to +85 °C
	During transportation	-40 °C to +85 °C
Relative humidity	During operation at 25 °C	≤ 95% without condensation
Housing, dimensions and weight		
Design	compact	
Housing material	Basic housing	Die cast aluminum, powder coated
	Front cover	Polycarbonate (PC-GF10)
Degree of protection	IP20	
Dimensions (W x H x D)	140 x 147 x 125 mm	
Weight	1300 g	
Installation options	• Installation on a DIN rail • Mounting on an S7-300 standard rail • Mounting on an S7-1500 standard rail	
Mean time between failure (MTBF)		
MTBF (EN/IEC 61709; 40 °C)	> 20 years	

[1] Note the wiring rules (Page 83).

[2] Detected with the SFP992-1ELH. You will find the precise values in the operating instructions of the pluggable transceivers, see the section "Introduction", Additional documentation (Page 7).

[3] Depending on which pluggable transceiver you use, the maximum ambient temperature can change, see section "Accessories", "SFP transceiver (Page 37)".

9.25 Technical specifications of SCALANCE XC224-4C G EEC

The following technical specifications apply to SCALANCE XC224-4C G EEC.

Technical specifications				
Connection to Industrial Ethernet				
Electrical connectors		Quantity		20
		Connector		RJ45 jack
		Properties		Half/full duplex, MDI-X pinning
		Transmission speed		10 / 100 / 1000 Mbps
Combo ports	Quantity			4
	Electrical connectors	Quantity		4
		Connector		RJ45 jack
		Properties		Half/full duplex, MDI-X pinning
		Transmission speed		10 / 100 / 1000 Mbps
	Slots for pluggable transceivers	Quantity		4
		Connector		SFP transceivers (LC port)
		Transmission speed		1000 Mbps 100 Mbps also possible via active SFPs
Diagnostics interface				
Serial interface		Quantity		1
		Connector		RJ-11 jack
Electrical data				
Power supply [1]		Rated voltage		24 V DC
		Voltage range (incl. tolerance)		19.2 to 31.2 V DC Safe Extra Low Voltage (SELV)
		Design		Terminal block, 4 terminals
		Properties		Implemented redundantly; The connected power supply must meet the requirements of NEC Class 2.
Current consumption		24 V DC	Without SFP	600 mA
			With SFP [2]	700 mA
Effective power loss			Without SFP	14.4 W
			With SFP [2]	16.8 W
Overvoltage category				CAT II
Fusing				3.15 A / 125 V
Signaling contact [1]		Quantity		1
		Design		Terminal block, 2 terminals
		Permitted voltage range		24 V DC
		Load capability		max. 100 mA
Permitted ambient conditions				

Technical specifications		
Ambient temperature [3]	During LAN operation with RJ45 connector up to 2000 m above sea level	During operation in horizontal installation position: -40 °C to +70 °C During operation in a different installation position: -40 °C to +70 °C
	When operating with pluggable transceivers of the types: • [-] Standard version • LD Up to 2000 m above sea level	During operation in horizontal installation position: -40 °C to +65 °C During operation in a different installation position: -40 °C to +60 °C
	When operating with pluggable transceivers of the types: • LH • LH+ • ELH • SFP992-1+ Up to 2000 m above sea level	During operation in horizontal installation position: -40 °C to +60 °C During operation in a different installation position: -40 °C to +60 °C
	With operation between 2000 m and 3000 m above sea level	The maximum ambient temperature is reduced by 5 °C [4]
	With operation between 3000 m and 4000 m above sea level	The maximum ambient temperature is reduced by 10 °C [4]
	During storage	-40 °C to +85 °C
	During transportation	-40 °C to +85 °C
Relative humidity	During operation at 25 °C	≤ 95% without condensation
Housing, dimensions and weight		
Design	compact	
Housing material	Basic housing	Die cast aluminum, powder coated
	Front cover	Polycarbonate (PC-GF10)
Properties	Coated printed circuit board (conformal coating)	
Degree of protection	IP20	
Dimensions (W x H x D)	140 x 147 x 125 mm	
Weight	1300 g	
Installation options	• Installation on a DIN rail • Mounting on an S7-300 standard rail • Mounting on an S7-1500 standard rail	
Mean time between failure (MTBF)		
MTBF (EN/IEC 61709; 40 °C)	> 20 years	

[1] **Wiring rules**

Observe the wiring rules (Page 83).

[2] **Pluggable transceiver**

Detected with the SFP992-1ELH. You will find the precise values in the operating instructions of the pluggable transceivers, see the section "Introduction", Additional documentation (Page 7).

[3] **Ambient temperature with SFP**

The maximum ambient temperature during operation depends on the operating elevation and the installed pluggable transceivers, see also the section "SFP transceiver (Page 37)" in the "Accessories" section.

[4] **Derating**

The derating values depend on the maximum ambient temperatures during operation up to 2000 m.

9.26 Mechanical stability (in operation)

SCALANCE XC-200 meets the following requirement relating to mechanical stability in operation:

- **IEC 60068-2-27 shock**
  - 15 g, 11 ms duration
  - 6 shocks per axis
- **IEC 60068-2-6 vibration**
  - 10 - 58 Hz: 0.075 mm
  - 85 - 150 Hz: 1 g
  - 1 octave/min, 20 sweeps

9.27 Resistance to harmful gases according to ISA-71.04

The devices listed in the scope of validity meet the following requirements regarding resistance to harmful gases:

Corrosive gases as airborne contaminants Reactive species H_2S and SO_2	ISA-71.04 severity level	G1, G2, G3 RH ≤ 75%, no condensation
	Test according to	IEC 60068-2-42 (SO_2 10ppm)
		IEC 60068-2-43 (H_2S 1ppm)

9.28 RF radiation according to NAMUR NE21

The devices listed in the scope of validity meet the following requirements regarding RF radiation:

RF radiation according to IEC 61000-4-3/NAMUR NE21	
80 MHz - 2.0 GHz	2.0 GHz - 2.7 GHz
10 V/m	3 V/m
80% AM (1kHz)	

9.29 Cable lengths

The cable lengths listed below apply to the SCALANCE XC-200.

Cable	Permitted cable length
IE TP torsion cable with IE FC Outlet RJ-45 + 10 m TP cord	0 to 45 m + 10 m TP cord
IE TP torsion cable with IE FC RJ-45 Plug 180	0 to 55 m
IE FC TP Marine / Trailing / Flexible cable with IE FC Outlet RJ-45 + 10 m TP cord	0 to 75 m + 10 m TP cord
IE FC TP Marine / Trailing / Flexible cable with IE FC RJ-45 Plug 180	0 to 85 m
IE FC TP standard cable with IE FC Outlet RJ-45 + 10 m TP cord	0 to 90 m + 10 m TP cord
IE FC TP standard cable with IE FC RJ-45 Plug 180	0 to 100 m

9.30 Switching properties

The switching properties listed below apply to the SCALANCE XC-200. The following device versions differ from the other SCALANCE XC-200 devices in some switching properties:

- Gigabit versions (Page 7) (suffix "G" in the type designation)
- Devices with combo ports (Page 7) (suffix "C" in the type designation)

You will find additional information on the devices in the section "Product overview (Page 21)".

Switching properties	SCALANCE XC-200	Gigabit versions/ Devices with combo ports
Aging time	Can be configured (default value: 30 seconds)	
Maximum frame size	1632	10240
Max. number of learnable addresses	8192	16000

Switching properties	SCALANCE XC-200	Gigabit versions/ Devices with combo ports
Response to LLDP frames	Blocking	
Response to spanning tree BPDU frames	Forwarding	
CoS acc. to IEEE 802.1Q	Yes	
QoS priority queues	4	8
Switching technique	Store and forward	
Latency	10 microseconds	

Full wire speed switching			
Frame length (bytes)	**Number of frames per second**		
	At 100 Mbps	At 1000 Mbps	At 10000 Mbps
64	148810	1488095	14880952
128	84459	844594	8445946
256	45290	452898	4528986
512	23496	234962	2349664
1024	11973	119731	1197318
1280	9615	96153	961538
1518	8127	81274	811688

Note

The number of SCALANCE XC-200 modules connected in a line influences the entire frame delay. When a frame passes through the IE switch, this is delayed by the store-and-forward function of the SCALANCE XC-200 by 10-130 microseconds (at 100 Mbps).

Dimension drawings

10

Note

Dimensions are specified in mm.

Front view

This front view applies to the following devices:

- SCALANCE XC206-2 (ST/BFOC)
- SCALANCE XC206-2 (SC)
- SCALANCE XC206-2G PoE (54 V)
- SCALANCE XC206-2G PoE EEC (54 V)
- SCALANCE XC206-2SFP
- SCALANCE XC206-2SFP G
- SCALANCE XC206-2SFP EEC
- SCALANCE XC206-2SFP G EEC
- SCALANCE XC208
- SCALANCE XC208G
- SCALANCE XC208G PoE (54 V)
- SCALANCE XC208EEC
- SCALANCE XC208G EEC

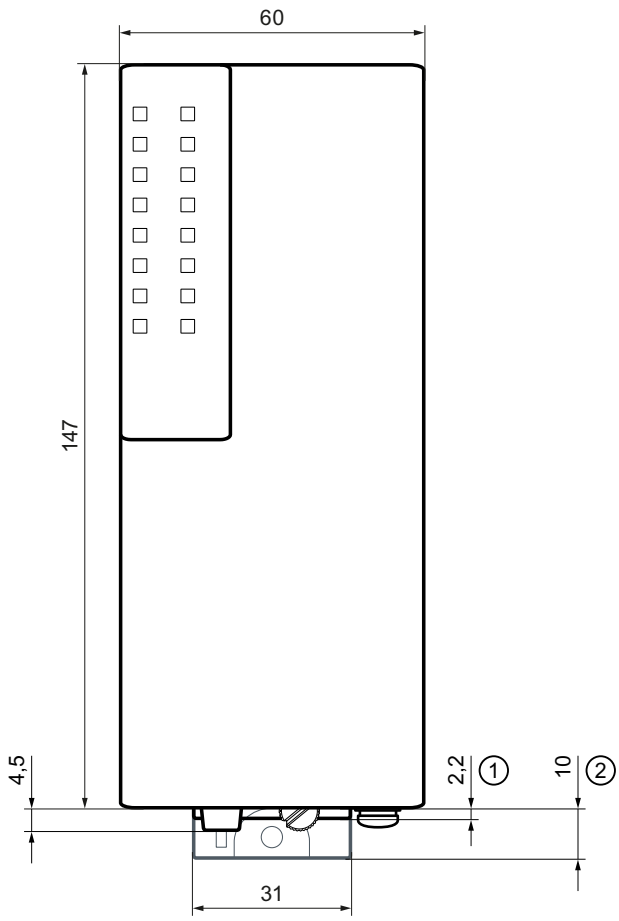

① Securing bar in the rail mounting position

② Securing bar in the wall mounting position (as supplied).

Figure 10-1 Width and height

Front view

This front view applies to the following devices:

- SCALANCE XC206-2G PoE
- SCALANCE XC208G PoE

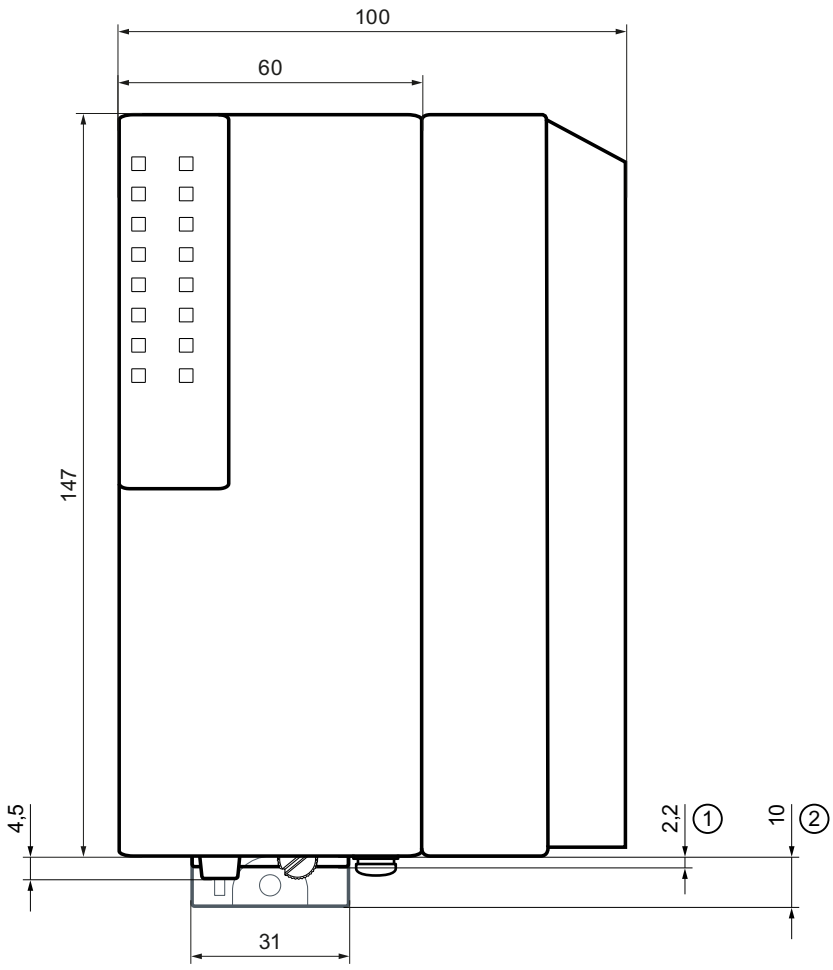

① Securing bar in the rail mounting position

② Securing bar in the wall mounting position (as supplied).

Figure 10-2 Width and height

Front view

This front view applies to the following devices:

- SCALANCE XC216
- SCALANCE XC216EEC
- SCALANCE XC224

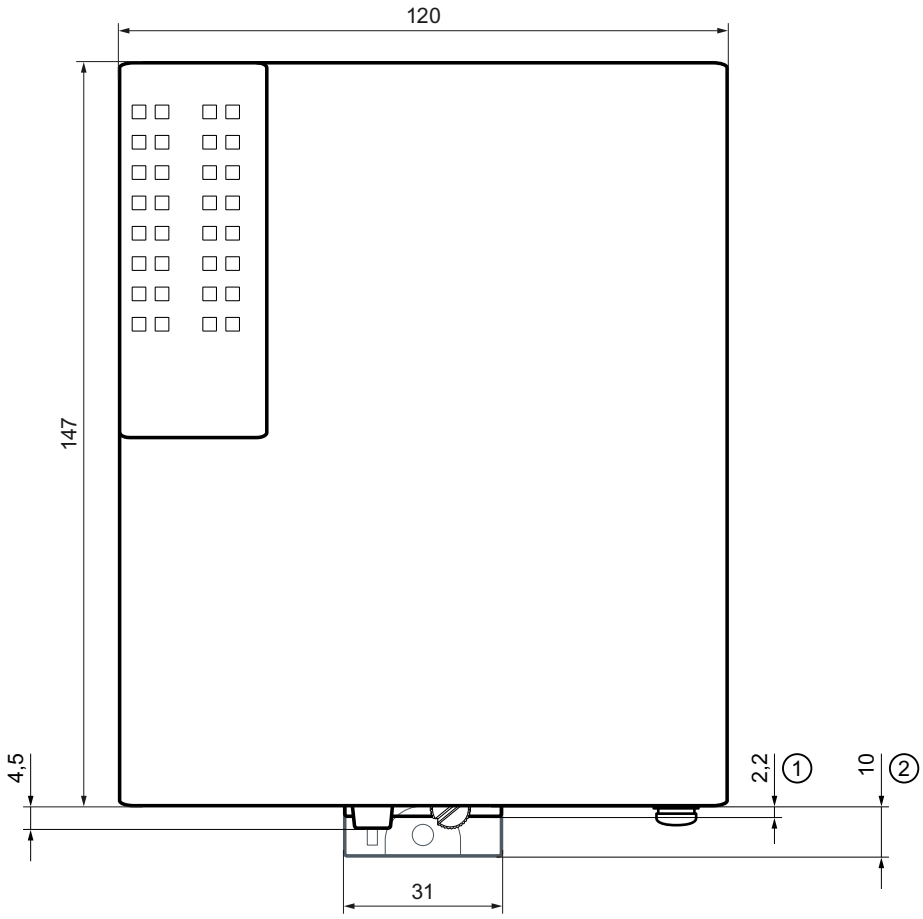

① Securing bar in the rail mounting position

② Securing bar in the wall mounting position (as supplied).

Figure 10-3 Width and height

Front view

This front view applies to the following devices:

- SCALANCE XC216-3G PoE (54 V)
- SCALANCE XC216-4C
- SCALANCE XC216-4C G
- SCALANCE XC216-4C G EEC
- SCALANCE XC224-4C G
- SCALANCE XC224-4C G EEC

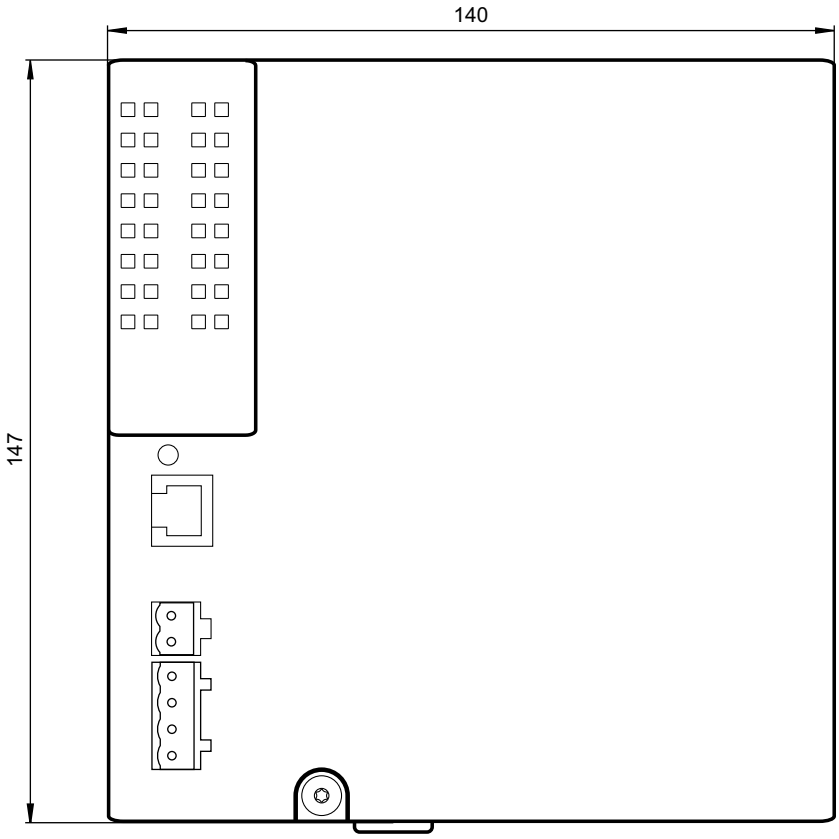

Figure 10-4 Width and height

Front view

This front view applies to the following devices:

- SCALANCE XC216-3G PoE

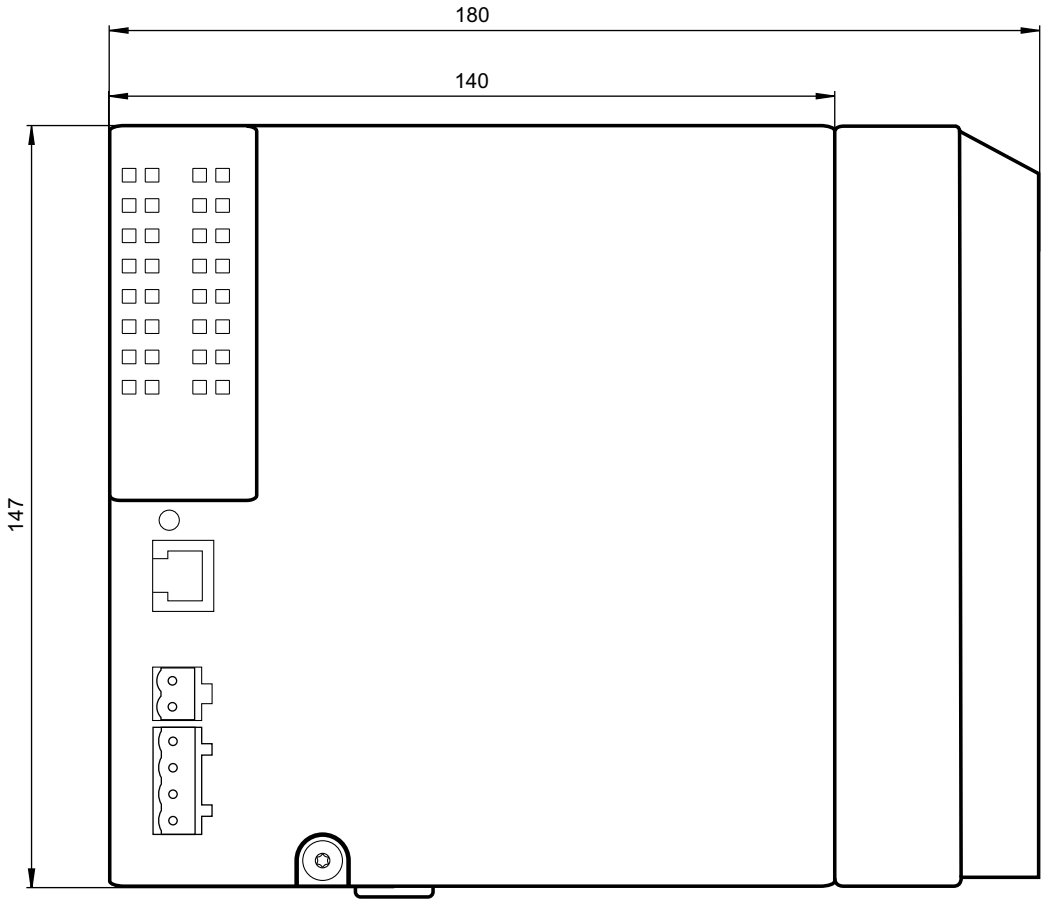

Figure 10-5 Width and height

Side view of the SCALANCE XC-200

This side view applies to all SCALANCE XC-200. Devices without fastening plate have the same dimensions in relation to depth.

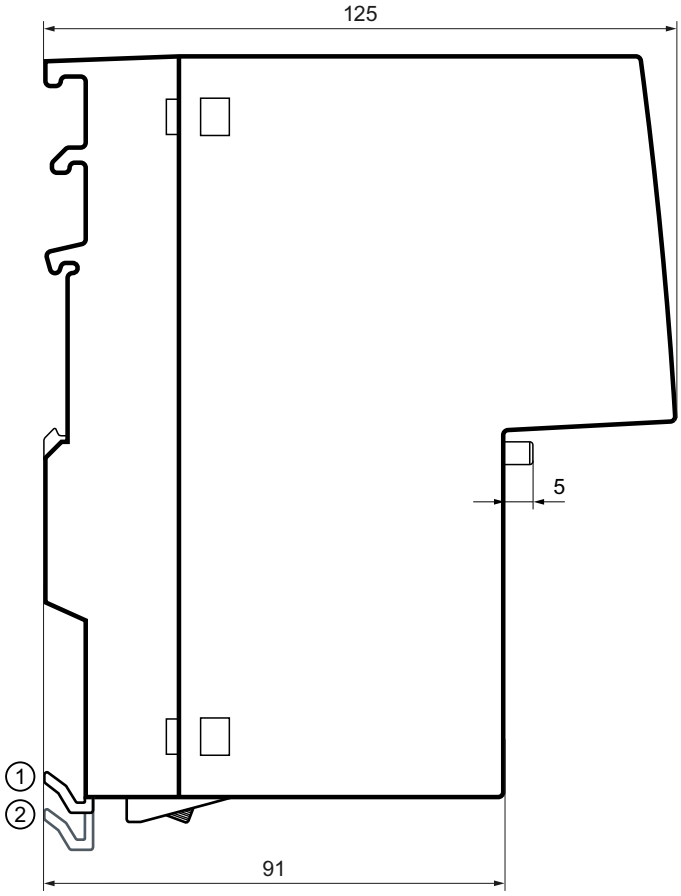

① Securing bar in the rail mounting position

② Securing bar in the wall mounting position (as supplied).

Figure 10-6 Depth

Drilling template for wall mounting

The drilling pattern applies to all devices with a fastening plate.

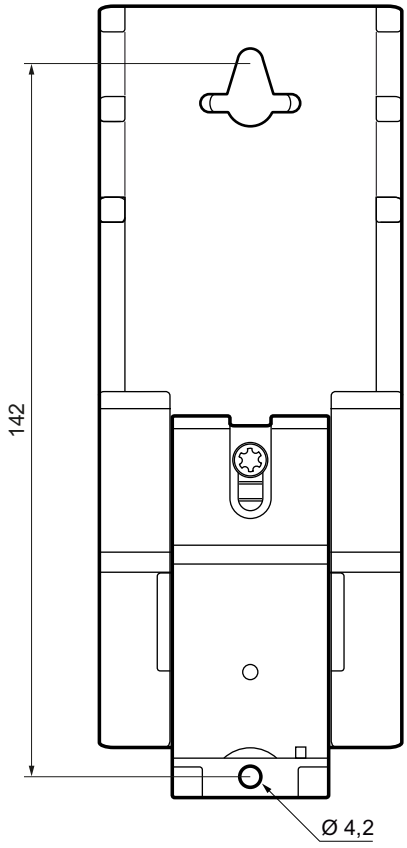

Figure 10-7 Drilling template with securing bar in the wall mounting position (as supplied)

Approvals

11

The SIMATIC NET products described in these Operating Instructions have the approvals listed below.

Note

Issued approvals on the type plate of the device

The specified approvals apply only when the corresponding mark is printed on the product. You can check which of the following approvals have been granted for your product by the markings on the type plate.

Current approvals on the Internet

You will find the current approvals for the product on the Internet pages of Siemens Industry Online Support (https://support.industry.siemens.com/cs/ww/en/ps/15273/cert).

Notes for the manufacturers of machines

This product is not a machine in the sense of the EC Machinery Directive or the Supply of Machinery (Safety) Regulations (UK).

There is therefore no declaration of conformity relating to the EC Machinery Directive 2006/42/EEC or the Supply of Machinery (Safety) Regulations 2008 (UK) for this product.

If the product is part of the equipment of a machine, it must be included in the procedure for obtaining the EU/UK conformity assessment by the manufacturer of the machine.

Machinery directive

The product is a component in compliance with the EC Machinery Directive 2006/42/EEC and the Supply of Machinery (Safety) Regulations 2008 (UK).

According to the Machinery Directive respectively the Supply of Machinery (Safety) Regulations (UK), we are obliged to point out that the product described is intended solely for installation in a machine.

Before the final product can be put into operation, it must be tested to ensure that it conforms with the Machinery Directive 2006/42/EEC and the Supply of Machinery (Safety) Regulations 2008 (UK).

EC Declaration of Conformity

The SIMATIC NET products described in these operating instructions meet the requirements and safety objectives of the following EC directives and comply with the harmonized

European standards (EN) which are published in the official documentation of the European Union and here.

- **2014/34/EU (ATEX explosion protection directive)**
  Directive of the European Parliament and the Council of 26 February 2014 on the approximation of the laws of the member states concerning equipment and protective systems intended for use in potentially explosive atmospheres, official journal of the EU L96, 29/03/2014, pages. 309-356
- **2014/30/EU (EMC)**
  EMC directive of the European Parliament and of the Council of February 26, 2014 on the approximation of the laws of the member states relating to electromagnetic compatibility; official journal of the EU L96, 29/03/2014, pages. 79-106
- **2011/65/EU (RoHS)**
  Directive of the European Parliament and of the Council of 8 June 2011 on the restriction of the use of certain hazardous substances in electrical and electronic equipment, official journal of the EC L174, 01/07/2011, pages 88-110

You will find the EC Declaration of Conformity for these products on the Internet pages of Siemens Industry Online Support (https://support.industry.siemens.com/cs/ww/en/ps/15273/cert).

The EC Declaration of Conformity is available for all responsible authorities at:

Siemens Aktiengesellschaft

Digital Industries
DE-76181 Karlsruhe
Germany

UK Declaration of Conformity

The UK declaration of conformity is available to all responsible authorities at:

Siemens Aktiengesellschaft
Digital Industries
Process Automation
DE-76181 Karlsruhe
Germany

Importer UK:

Siemens plc,
Manchester M20 2UR

You can find the current UK Declaration of Conformity for these products on the Internet pages under Siemens Industry Online Support (https://support.industry.siemens.com/cs/ww/en/ps/15273/cert).

The SIMATIC NET products described in this document meet the requirements of the following directives:

- UKEX Regulation
  SI 2016/1107 Equipment and Protective Systems Intended for use in Potentially Explosive Atmospheres Regulations 2016, and related amendments
- EMC Regulation
  SI 2016/1091 Electromagnetic Compatibility Regulations 2016, and related amendments
- RoHS Regulation
  SI 2012/3032 Restriction of the Use of Certain Hazardous Substances in Electrical and Electronic Equipment Regulations 2012, and related amendments

ATEX, IECEx, UKEX and CCC Ex certification

WARNING

Risk of explosion in hazardous areas

When using SIMATIC NET products in hazardous area zone 2, make absolutely sure that the associated conditions in the following document are adhered to:

"SIMATIC NET Product Information Use of subassemblies/modules in a Zone 2 Hazardous Area".

You will find this document

- on the data medium that ships with some devices.
- on the Internet pages under Siemens Industry Online Support (https://support.industry.siemens.com/cs/ww/en/view/78381013).

Enter the document identification number "C234" as the search term.

The markings of the electrical devices are:

II 3 G Ex ec IIC T4 Gc
DEKRA 18ATEX0025 X
IECEx DEK 18.0017X

II 3 G Ex ec IIC T4 Gc
DEKRA 21UKEX0001 X

Importer UK:
Siemens plc,
Manchester, M20 2UR, UK

(Ex ec IIC T4 Gc, not on the nameplate)

The products meet the requirements of the following standards:

- EN/IEC 60079-7, GB/T 3836.3
- EN IEC/IEC 60079-0, GB/T 3836.1

You will find the current versions of the standards in the currently valid certificates.

Note for devices with CLASS 1 LASER

Important note on products certified according to Type Examination Certificate KEMA 07ATEX0145 X as of Issue 95 / DEKRA 18ATEX0025 X and IECEx Certificate of Conformity DEK 14.0025X as of Issue 43 / DEK 18.0017X and containing Class 1 optical radiation sources.

Note

CLASS 1 LASER

The device contains optical radiation sources which comply with the limits of Class 1 according to IEC 60825-1. Fiber-optic cables connected to these optical radiation sources may therefore be routed either to or through hazardous areas requiring Category 2G, 3G, 2D or 3D equipment.

EMC (electromagnetic compatibility)

The SIMATIC NET products described in these operating instructions meet the electromagnetic compatibility requirements according to the EU Directive 2014/30/EU as well as the UK-Regulation SI 2016/1091 and their associated amendments.

Applied standards:

- EN 61000-6-2 Electromagnetic compatibility (EMC) - Part 6-2: Generic standards - Immunity for industrial environments
- EN 61000-6-4 Electromagnetic compatibility (EMC) - Part 6-4: Generic standards - Emission standard for industrial environments

You will find the current versions of the standards in the currently valid EC/UK Declaration of Conformity.

EMC (railway applications)

The EEC device versions also meet the electromagnetic compatibility requirements according to the EU Directive 2014/30/EU as well as the UK-Regulation SI 2016/1091.

Applied standards:

- EN 50121-3-2 Railway applications - Electromagnetic compatibility - part 3-2: Rolling stock - Devices
- EN 50121-4 Railway applications - Electromagnetic compatibility - part 4: Interference emissions and immunity of signal telecommunications equipment

You will find the current versions of the standards in the currently valid EC declaration of conformity.

RoHS

The SIMATIC NET products described in these operating instructions meet the requirements on the restriction of the use of certain hazardous substances in electrical and electronic equipment according to the EU Directive 2011/65/EU as well as the UK-Regulation SI 2012/3032 and their associated amendments.

Applied standard:

- EN IEC 63000

FM

The product meets the requirements of the standards:

- Factory Mutual Approval Standard Class Number 3611
- FM Hazardous (Classified) Location Electrical Equipment:
  Non Incendive / Class I / Division 2 / Groups A,B,C,D / T4 and
  Non Incendive / Class I / Zone 2 / Group IIC / T4

cULus Approval for Information Technology Equipment

cULus Listed I. T. E.

Underwriters Laboratories Inc. complying with

- UL 60950-1 (Information Technology Equipment)
- CAN/CSA C22.2 No. 60950-1

Report no. E115352

cULus approval PROG. CNTLR.

cULus Listed PROG. CNTLR.

Underwriters Laboratories Inc. complying with

- UL 61010-1
- CSA-IEC 61010-2-201

Report no. E85972

cULus Approval Hazardous Location

cULus Listed I. T. E. FOR HAZ. LOC.

Underwriters Laboratories Inc. complying with

- UL121201
- ANSI/ISA 12.12.01
- CSA C22.2 No. 213

Approved for use in
Cl. 1, Div. 2, GP A, B, C, D T4
Cl. 1, Zone 2, GP IIC T4

Report no. E240480

cULus approval for industrial control equipment

cULus Listed IND. CONT. EQ.

Underwriters Laboratories Inc. complying with

- UL 61010-2-201
- CSA C22.2 NO. 61010-1

Report no. E85972

cULus Approval Hazardous Location

cULus Listed PROG. CNTLR. FOR HAZ. LOC.

Underwriters Laboratories Inc. complying with

- UL 121201 (Programmable Controllers)
- CSA C22.2 No. 213

Approved for use in
Cl. 1, Div. 2, GP A, B, C, D T4
Cl. 1, Zone 2, GP IIC T4

Report no. E223122

cULus Approval for Information Technology Equipment

cULus Listed I. T. E.

Underwriters Laboratories Inc. complying with

- UL 60950-1 (Information Technology Equipment)
- CSA C22.2 No. 60950-1

Report no. E115352

cULus Approval Hazardous Location

cULus Listed I. T. E. FOR HAZ. LOC.

Underwriters Laboratories Inc. complying with

- ANSI/ISA 12.12.01
- CAN/CSA C22.2 No. 213

Approved for use in
Cl. 1, Div. 2, GP A, B, C, D T4
Cl. 1, Zone 2, GP IIC T4

Report no. E240480

Note for Australia - RCM

The product meets the requirements of the RCM standard.

Applied standards:

- AS/NZS CISPR11 (Industrial, scientific and medical equipment - Radio-frequency disturbance characteristics - Limits and methods of measurement).
- EN 61000-6-4 Electromagnetic compatibility (EMC) - Part 6-4: Generic standards - Emission standard for industrial environments

You will find the current versions of the standards in the currently valid RCM SDoCs (Self-Declaration of Conformity).

MSIP 요구사항 - For Korea only

A급 기기(업무용 방송통신기자재)

이 기기는 업무용(A급) 전자파 적합기기로서 판매자 또는 사용자는 이 점을 주의하시기 바라며, 가정 외의 지역에서 사용하는것을 목적으로 합니다.

Marking for the customs union

EAC (Eurasian Conformity)

Eurasian Economic Union of Russia, Belarus, Armenia, Kazakhstan and Kyrgyzstan

Declaration of conformity according to the technical regulations of the customs union (TR ZU)

FDA and IEC marking

The following devices meet the FDA and IEC requirements listed below:

Device	CLASS 1 LASER PRODUCT
SCALANCE XC206-2 (ST/BFOC)	●
SCALANCE XC206-2 (SC)	●
SCALANCE XC206-2G PoE	(*)
SCALANCE XC206-2G PoE (54 V)	(*)
SCALANCE XC206-2G PoE EEC (54 V)	(*)
SCALANCE XC206-2SFP	(*)
SCALANCE XC206-2SFP G	(*)
SCALANCE XC206-2SFP EEC	(*)
SCALANCE XC206-2SFP G EEC	(*)
SCALANCE XC208	-
SCALANCE XC208G	-
SCALANCE XC208G PoE	-
SCALANCE XC208G PoE (54 V)	-
SCALANCE XC208EEC	-
SCALANCE XC208G EEC	-
SCALANCE XC216	-
SCALANCE XC216EEC	-
SCALANCE XC216-3G PoE	(*)
SCALANCE XC216-3G PoE (54 V)	(*)

Device	CLASS 1 LASER PRODUCT
SCALANCE XC216-4C	(*)
SCALANCE XC216-4C G	(*)
SCALANCE XC216-4C G EEC	(*)
SCALANCE XC224	-
SCALANCE XC224-4C G	(*)
SCALANCE XC224-4C G EEC	(*)

* In modular devices, you can find the marking on the pluggable transceiver used or in the relevant operating instructions.

Figure 11-1 FDA and IEC approvals

CAUTION

Use of controls or adjustments or performance of procedures other than those specified herein may result in hazardous radiation exposure.

Installation guidelines

The devices meet the requirements if you adhere to the installation and safety instructions contained in this documentation and in the following documentation when installing and operating the devices.

- "Industrial Ethernet / PROFINET Industrial Ethernet" System Manual (https://support.industry.siemens.com/cs/ww/en/view/27069465)
- "Industrial Ethernet / PROFINET - Passive Network Components" System Manual (https://support.industry.siemens.com/cs/ww/en/view/84922825)
- "EMC Installation Guidelines" configuration manual (https://support.industry.siemens.com/cs/ww/en/view/60612658)

WARNING

Personal injury and property damage can occur

The installation of expansions that are not approved for SIMATIC NET products or their target systems may violate the requirements and regulations for safety and electromagnetic compatibility.

Only use expansions that are approved for the system.

Note

The test was performed with a device and a connected communications partner that also meets the requirements of the standards listed above.

When operating the device with a communications partner that does not comply with these standards, adherence to the corresponding values cannot be guaranteed.

Index

A

Approvals, 163
Article numbers, 21, 24
Autonegotiation, 81

C

CE mark, 163
Combo port, 50
Command Line Interface (CLI), 49, 89, 95
Components of the product, 25
Configuration, 43
Connecting cable, 89
Connecting up
    Grounding, 88
Connection to Industrial Ethernet, 102, 104, 106, 109, 111, 113, 116, 119, 121, 123, 125, 127, 129, 131, 133, 134, 136, 139, 141, 143, 146, 148, 150
C-PLUG
    Configuration, 48

D

Dimensions, 97, 100, 103, 105, 107, 110, 112, 114, 117, 119, 121, 123, 125, 127, 129, 131, 133, 135, 137, 140, 142, 144, 146, 149, 151
Display mode, 42, 46

E

Electrical data, 97, 99, 102, 104, 106, 109, 111, 113, 116, 119, 121, 123, 125, 127, 129, 131, 133, 134, 136, 139, 141, 143, 146, 148, 150
Environmental conditions, 38, 39, 40, 41, 97, 99, 102, 104, 106, 109, 111, 113, 116, 119, 121, 123, 125, 127, 129, 131, 133, 135, 137, 139, 141, 143, 146, 148, 150
ESD directives, 12

F

Factory defaults, 42, 96
Factory setting, 96
Factory settings, 42, 96
Fault mask, 43
Fault/error status, 45
Firmware, 45

G

Glossary, 9
Grounding, 27, 28, 29, 30, 31, 32, 33, 34, 35, 36, 37, 88
Grounding screw, 27, 28, 29, 30, 31, 32, 33, 34, 35, 36, 37

H

Housing, 97, 100, 103, 105, 107, 110, 112, 114, 117, 119, 121, 123, 125, 127, 129, 131, 133, 135, 137, 140, 142, 144, 146, 149, 151

I

Installation, 97, 100, 103, 105, 107, 110, 112, 114, 117, 119, 121, 123, 125, 127, 129, 131, 133, 135, 137, 140, 142, 144, 146, 149, 151
    Installation on a DIN rail, 60, 62
    Installation on a standard rail, 63, 64, 65, 66
    Wall mounting, 67
Installation on a DIN rail, 60, 62
Installation on a standard rail, 63, 64, 65, 66

K

Knurled screw, 27, 28, 29, 30, 31, 32, 33, 36, 60, 63, 65

L

LED display, 27, 28, 29, 30, 31, 32, 33, 34, 35, 36, 37, 44
Levering aid, 27, 28, 29, 30, 31, 32, 33, 36, 68

M

MDI / MDI-X autocrossover, 81
MTBF, 98, 100, 103, 105, 107, 110, 112, 114, 117, 120, 122, 124, 126, 128, 130, 132, 134, 136, 137, 140, 142, 144, 147, 149, 151

P

Permitted ambient conditions, 38, 39, 40, 41, 97, 99, 102, 104, 106, 109, 111, 113, 116, 119, 121, 123, 125, 127, 129, 131, 133, 135, 137, 139, 141, 143, 146, 148, 150
Pin assignment, 81
PLUG, 48
Pluggable transceiver
    SFP, 8, 38, 39, 40, 41
    SFP active, 39
Plug-in transceiver
    SFP bidirectional, 40
PoE, 51
Power over Ethernet, 51
Power supply, 25, 27, 28, 29, 30, 31, 32, 33, 34, 35, 36, 37, 84, 86

R

Reset device, 42, 96
Reset to Factory Defaults, 43, 96

S

S7-1500, 65, 66
S7-300, 63, 64
Safety notices
    for installation, 55
    general, 13
    Use in hazardous areas, 13, 55
Securing bar, 27, 28, 29, 30, 31, 32, 33, 36, 60, 63, 65, 156, 157, 158, 161
Securing location, 64, 66
Securing screw, 64, 66
SELECT/SET button, 27, 28, 29, 30, 31, 32, 33, 34, 35, 36, 37, 42, 46, 95, 96
Serial interface, 89
SFP plug-in transceiver, 38
SFP transceiver, 8, 38, 39, 40, 41
SFP+ transceiver, 41
Signaling contact, 25, 27, 28, 29, 30, 31, 32, 33, 34, 35, 36, 37, 45, 87
SIMATIC NET glossary, 9
SIMATIC NET manual, 9
Spare parts, 26
Spring-loaded terminal, 25, 84, 86, 87
Startup phase, 43, 45, 96
System manual, 9, 170

W

Web Based Management (WBM), 49, 95
Weight, 97, 100, 103, 105, 107, 110, 112, 114, 117, 119, 121, 123, 125, 127, 129, 131, 133, 135, 137, 140, 142, 144, 146, 149, 151
Wiring rules, 84, 86, 87