PRODUCT CATALOG 2024

HVAC products and building automation systems

For more information, visit:
siemens.com/hvac-products

SIEMENS

Промэлектроника, sales@prom-elec.com

HVAC products and building automation systems

Contents

1 Standard controllers
- Overview and selection tools
- Standalone heating controllers
- Communicating heating controllers
- Standalone district heating controllers
- Communicating district heating controllers
- Standalone HVAC controllers
- Communicating HVAC controllers
- Various electrical accessories

2 Software, web server and system devices
- Overview and selection tools
- Engineering and service tool (Synco / LPB)
- Web server (Synco / LPB)
- KNX system devices

3 Room automation
- Overview and selection tools
- Room automation RXB (KNX)
- Room automation DXR (BACnet)

4 Wireless and IoT
- Overview and selection tools
- Connect Box
- Wireless room solution
- IAQ multi-sensor

5 Home automation system
- Overview and selection tools
- Synco™ living
- Connected Home

6 Thermostats
- Overview and selection tools
- Communicating room thermostats
- Standalone room thermostats
- Capillary and clamp-on thermostats

7 Sensors
- Overview and selection tools
- Temperature
- Humidity and temperature
- Air quality
- Pressure
- Flow
- Solar sensors

8 Valves and actuators
- Overview and selection tools
- Actuators for globe and pressure independent control valves (PICV)
- Globe and pressure independent control valve (PICV)
- Actuators for rotary valves
- Rotary valves
- Refrigerant valves

9 Damper actuators
- Overview and selection tools
- Air damper actuators
- VAV controller
- Actuators for fire and smoke protection dampers

10 Variable speed drives
- Overview and selection tools
- Variable Speed Drives for HVAC Applications

11 Meters
- Overview and selection tools
- Electronic heat cost allocators
- Mechanical water meters
- Electronic water meters
- Impeller type heat/cooling energy meters
- Ultrasonic heat/cooling energy meters
- Systems for remote readout
- Synergyr control and metering system

Product no.	Product Title	Data sheet	Page
421314160	Cable holder for protection pocket mounting	N1831	330
428488060	Sealing gland complete, stem diameter 10 mm, sealing material EPDM		454
428488740	Sealing gland complete, stem diameter 10 mm, sealing material EPDM, up to 150 °C		495
467956290	Sealing gland complete, stem diameter 14 mm, sealing material EPDM, up to 150 °C		454
467956300	Sealing gland complete, stem diameter 14 mm, sealing material PTFE, up to 220 °C		471
7424200000	Stem connection washer for SKB/SKC actuators, stem diameter 10 mm, set of 5		469
7428400610	Replacement sealing gland, stem diameter 10 mm, sealing material FEPM		469
7442401250	Connection cable (VAV, AST20) with 3-pole connector and ferrules, 1 m	N4698	679
7442401260	Connection cable (VAV, AST20) with 3-pole connector and 6-pole plug, 2.5 m	N4698	682
7442403010	Connection cable (VAV, AST20) with 3-pole connector and 7-pole plug, 2.5 m	N4698	679
8000060844	SparePart-Kit SAL...	N4502	583
9060944004	Sealing disk G 1¼", for threaded connection R 1"	N5324	727
9060944024	Sealing disk for flange DN 40	N5324	735
9060944025	Sealing disk for flange DN 50	N5324	735
9060944026	Sealing disk for flange DN 65	N5324	735
9060944027	Sealing disk for flange DN 80	N5324	735
9060944028	Sealing disk for flange DN 100	N5324	735
ACS26	ACS26 – AMR remote readout software	N2870	738
ACT21	ACT21 - Parameterization software	N2870	738
ACT26	ACT26 – Commissioning and service software		738
ACT46	Walk-by readout software		740
ACT50	ACT50 – Readout and parameterization software	N2887	708
ACT531	Readout software for WTV531-GA5060 level converter	A6V10844345	742
ACT60	ACT60 – Readout and parameterization app for WTT726-FE7300		713
ADA10	Closing dimension adapter plate for Thermal Actuators STA/STP	A6V12986007	416
ADN10	Two-port seat lockshield valve, PN10, DN10, 0..1.8	N2107	487
ADN15	Two-port seat lockshield valve, PN10, DN15, kvs 0..2.5	N2107	487
ADN20	Two-port seat lockshield valve, PN10, DN20, kvs 0..3.0	N2107	487
AEN10	Angle lockshield valve, PN10, DN10, kvs 0..1.8	N2107	487
AEN15	Angle lockshield valve, PN10, DN15, kvs 0..2.5	N2107	487
AEN20	Angle lockshield valve, PN10, DN20, kvs 0..3.0	N2107	487
AEW310.2	M-bus pulse adapter	N5383	743
AL100	Retrofit adapter for installed 2W..., 3W..., 4W... valves	N4878	416
AL431	Theft protection	N4884	416
ALE10	Electronic manometer for Siemens combi valves	CE1N4853	549
ALE11	Measuring lines and tips for Siemens combi valves	CE1N4853	549
ALF41B100	Bypass extension, flanged connections, DN100	N4404	515
ALF41B125	Bypass extension, flanged connections, DN125	N4404	515
ALF41B15	Bypass extension, flanged connections, DN15	N4404	519
ALF41B150	Bypass extension, flanged connections, DN150	N4404	515
ALF41B25	Bypass extension, flanged connections, DN25	N4404	519
ALF41B40	Bypass extension, flanged connections, DN40	N4404	519
ALF41B50	Bypass extension, flanged connections, DN50	N4404	519
ALF41B65	Bypass extension, flanged connections, DN65	N4404	515
ALF41B80	Bypass extension, flanged connections, DN80	N4404	515
ALG10/20	Mounting kit	N2803	744
ALG122	Malleable cast iron fitting G ¾" / Rp ⅜", set of 2	N4847	503
ALG123	Malleable cast iron fitting G ¾" / Rp ⅜", set of 3	N4847	544
ALG13.152B	Brass fitting G ½" / Rp ½", set of 2		605
ALG132	Brass fitting G ½" / R ⅜", set of 2	N4847	503
ALG133	Brass fitting G ½" / R ⅜", set of 3	N4847	544
ALG142	Brass fitting G ¾" / R ½", set of 2	N4847	503
ALG143	Brass fitting G ¾" / R ½", set of 3	N4847	544
ALG15.152B	Brass fitting G 1" / Rp ½", set of 2		605

Product no.	Product Title	Data sheet	Page
ALG15.202B	Brass fitting G 1" / Rp ¾", set of 2		605
ALG15.252B	Brass fitting G 1" / Rp 1", set of 2		605
ALG152	Malleable cast iron fitting G 1" / Rp ½", set of 2	N4363	503
ALG152B	Brass fitting G 1" / Rp ½", 100°C, set of 2	N4363	503
ALG153	Malleable cast iron fitting G 1" / Rp ½", set of 3	N4463	544
ALG153B	Brass fitting G 1" / Rp ½", 100 °C, set of 3	N4463	544
ALG202	Malleable cast iron fitting G 1¼" / Rp ¾", set of 2	N4363	503
ALG202B	Brass fitting G 1¼" / Rp ¾", 100 °C, set of 2	N4363	503
ALG203	Malleable cast iron fitting G 1¼" / Rp ¾", set of 3	N4463	544
ALG203B	Brass fitting G 1¼" / Rp ¾", 100 °C, set of 3	N4463	544
ALG252	Malleable cast iron fitting G 1½" / Rp 1", set of 2	N4363	503
ALG252B	Brass fitting G 1½" / Rp 1", 100 °C, set of 2	N4363	503
ALG253	Malleable cast iron fitting G 1½" / Rp 1", set of 3	N4463	544
ALG253B	Brass fitting G 1½" / Rp 1", 100 °C, set of 3	N4463	544
ALG322	Malleable cast iron fitting G 2" / Rp 1¼", set of 2	N4363	503
ALG322B	Brass fitting G 2" / Rp 1¼", 100 °C, set of 2	N4363	503
ALG323	Malleable cast iron fitting G 2" / Rp 1¼", set of 3	N4463	544
ALG323B	Brass fitting G 2" / Rp 1¼", 100 °C, set of 3	N4463	544
ALG402	Malleable cast iron fitting G 2¼" / Rp 1½", set of 2	N4363	503
ALG402B	Brass fitting G 2¼" / Rp 1½", 100 °C, set of 2	N4363	503
ALG403	Malleable cast iron fitting G 2¼" / Rp 1½", set of 3	N4463	544
ALG403B	Brass fitting G 2¼" / Rp 1½", 100 °C, set of 3	N4463	544
ALG502	Malleable cast iron fitting G 2¾" / Rp 2", set of 2	N4363	503
ALG502B	Brass fitting G 2 ¾" / Rp 2", 100 °C, set of 2	N4363	503
ALG503	Malleable cast iron fitting G 2¾" / Rp 2", set of 3	N4463	544
ALG503B	Brass fitting G 2 ¾" / Rp 2", 100 °C, set of 3	N4463	544
ALG80WRI	Mounting kit for WRV81/84 replacement	N2803	744
ALG83WRI	Mounting kit for WRV83 replacement	N2803	744
ALI10VWG41	Insulation cover for VWG41.10 6-Way ball valve		605
ALI20VWG41	Insulation cover for VWG41.20 6-Way ball valve	A6V10564480	605
ALJ100	Temperature Adapter		590
ALN14.152B	6-port mPICV couplings DZR brass CW602N DN15 (2 pieces incl. gaskets) G ¾ " - R ½ "	A6V12815016	570
ALN14.202B	6-port mPICV couplings DZR brass CW602N DN15 (2 pieces incl. gaskets) G ¾ " - R ¾ "	A6V12815016	570
ALN15.152B	Brass fitting G 1" / G ½", 5 °C - 90 °C, set of 2	A6V10564480	605
ALN15.202B	Brass fitting G 1" / G ¾", 5 °C - 90 °C, set of 2	A6V10564480	605
ALN15.202B/1	6-port mPICV couplings DZR brass CW602N DN20 (2 pieces incl. gaskets) G 1 " - R ¾ "	A6V12815016	570
ALN15.252B	6-port mPICV couplings DZR brass CW602N DN20 (2 pieces incl. gaskets) G 1 " - R 1 "	A6V10564480	570
ALP45	Spare nipples for VPI45.., set of 2, for VPI45..	CE1N4853	549
ALP46	Blanking plug for P/T ports	CE1N4853	549
ALP47	Drain ball valve inclusive O-ring	CE1N4853	549
ALP48	Combined P/T port and drain ball valve with red ribbon	CE1N4853	549
ALP49	Long P/T ports (set of 2 pieces)	CE1N4853	549
ALP50	Black spare valve protection cap (set of 2 pieces)	CE1N4853	566
ALP53	Black spare valve protection cap (set of 2 pieces)	A6V11877580	566
ALP54	DPR Replacement-Tool VQI46../VQP46..	A6V11877580	571
ALP55	6-port mPICV P/T coupling DN15 G 3/4" - G 1/2"A	A6V12815016	570
ALP56	6-port mPICV P/T coupling DN15 G 3/4" - G 3/4"A	A6V12815016	570
ALP57	6-mPICV P/T Coupling DN20 G 1" - G 3/4"A	A6V12815016	570
ALP58	6-port mPICV P/T coupling DN20 G 1" - G 1"A	A6V12815016	570
ALP59	6-port mPICV spare nipple P/T port DN15	A6V12815016	570
ALP60	6-port mPICV spare nipple P/T port DN20	A6V12815016	570
ALR100F70	DPR replacement for VPF44.100F70/VPF54.100F70	A6V12273951	551
ALR100F90	DPR replacement for VPF44.100F90/VPF54.100F90	A6V12273951	551
ALR50F15	DPR replacement for VPF44.50F15/VPF54.50F15	A6V12273951	551

Product no.	Product Title	Data sheet	Page
ALR50F25	DPR replacement for VPF44.50F25/VPF54.50F25	A6V12273951	551
ALR65F25-HP	DPR replacement for VPF54.65F25	A6V12273951	554
ALR65F25-LP	DPR replacement for VPF44.65F25	A6V12273951	551
ALR65F35-HP	DPR replacement for VPF54.65F35	A6V12273951	554
ALR65F35-LP	DPR replacement for VPF44.65F35	A6V12273951	551
ALR80F35	DPR replacement for VPF44.80F35/VPF54.80F35	A6V12273951	551
ALR80F45	DPR replacement for VPF44.80F45/VPF54.80F45	A6V12273951	551
ALS152	Steel fitting G ¾", d=21.3 mm, set of 2		503
ALS202	Steel fitting G 1", d=26.8 mm, set of 2		503
ALS252	Steel fitting G 1¼", d=33.7 mm, set of 2		503
ALT-AB200	Protection pocket, perforated, 200 mm	N1193	301
ALT-C001	Mounting kit for RAK../RAZ..	N1193	300
ALT-DB100J	Protection pocket, 100 mm, MS63 nickel-plated, G½", PN10, 2xLW7	N1194	300
ALT-DB150J	Protection pocket, 150 mm, MS63 nickel-plated, G½", PN10, 2xLW7	N1194	300
ALT-DB280J	Protection pocket, 280 mm, MS63 nickel-plated, G½", PN10, 2xLW7	N1194	300
ALT-DB450J	Protection pocket, 450 mm, MS63 nickel-plated, G½", PN10, 2xLW7	N1194	300
ALT-DS100J	Protection pocket, 100 mm, stainless steel V4A, G½" LW15	N1194	300
ALT-DS150J	Protection pocket, 150 mm, stainless steel V4A, G½" LW15	N1194	300
ALT-DS280J	Protection pocket, 280 mm, stainless steel V4A, G½" LW15	N1194	300
ALT-DS450J	Protection pocket, 450 mm, stainless steel V4A, G½" LW15	N1194	300
ALT-SB100	Protection pocket, 100 mm, MS63 nickel-plated, G½", PN10, LW7	N1194	300
ALT-SB150	Protection pocket, 150 mm, MS63 nickel-plated, G½", PN10, LW7	N1194	72
ALT-SB200	Protection pocket, 200 mm, MS63 nickel-plated, G½", PN10, LW7	N1194	300
ALT-SB280	Protection pocket, 280 mm, MS63 nickel-plated, G½", PN10, LW7	N1194	300
ALT-SS100	Protection pocket, 100 mm, stainless steel V4A, G½", PN16, LW7	N1194	300
ALT-SS150	Protection pocket, 150 mm, stainless steel V4A, G½", PN16, LW7	N1194	300
ALT-SS280	Protection pocket, 280 mm, stainless steel V4A, G½", PN16, LW7	N1194	300
ALT-SS450	Protection pocket, 450 mm, stainless steel V4A, G½", PN16, LW7	N1194	300
ALT-SSF100	Protection pocket, 100 mm, stainless steel V4A, G½", PN40, LW7	N1194	300
ALT-SSF150	Protection pocket, 150 mm, stainless steel V4A, G½", PN40, LW7	N1194	300
ALT-SSF200	Protection pocket, 200 mm, stainless steel V4A, G½", PN40, LW7	N1194	300
ALT-SSF280	Protection pocket, 280 mm, stainless steel V4A, G½", PN40, LW7	N1194	300
ALT-SSF450	Protection pocket, 450 mm, stainless steel V4A, G½", PN40, LW7	N1194	300
ALT-SSF600	Protection pocket, 600 mm, stainless steel V4A, G½", PN40, LW7	N1194	300
ALV14F32S	Replacement sealing gland, stem diameter 14 mm, sealing material FEPM		476
AMR	AMR wireless system	N2870	737
AP 118/01	Control Module Box	A6V11438329	181
AP 258E11	Surface Mounting Box Type B		197
AP 260/11	Door/window contact with battery, titanium white	A6V10416211	222
AQB2000	Mounting bracket for differenential pressure sensor for air	N1590	363
AQB2002	Connection kit to mount QBE63../64.., QBE3..	N1922	370
AQB2004	Mounting bracket for pressure sensor QBE2x03..	A6V10434028	366
AQB2005	Connection kit to mount QBE2x03..	A6V10434028	366
AQB21.2	Top hat rail adapter for differential pressure sensor for air	N1590	363
AQE2102	Compression fitting with threaded nipple ½"	N1781	323
AQF3100	Radiation shield for exterior wall mounting	N1858	336
AQF3101	Filter cap for humidity sensor	N1858	336
AQF3102	Filter cap for H_2O_2	N1858	336
AQF3103	Stainless Steel Filter Cap	N1858	336
AQF3150	Exchangeable measuring tip	N1858	336
AQF3153	Service-Set		336
AQF4150	Exchangeable measuring tip, with calibration certificate	N1859	336
AQM63.0	Mounting flange, adjustable depth	N1193	301
AQM63.2	3 capillary supports and 3 spacers for QAF.. Mounting	N1821	301

Product no.	Product Title	Data sheet	Page
AQM63.3	6 Capillary tube clamps for QAF../QAM.. mounting	N1284	306
AQM9020	Accessory, sensor QAM9020, mounting flange	N1772	319
AQR2500NF	Mounting plate EU (CEE/VDE)	N1408	317
AQR2500NG	Mounting plate IT (3 modular)	N1408	317
AQR2510NFW	Frame DELTA line for front module	N1410	317
AQR2510NGW	Frame DELTA azio for front module	N1410	317
AQR2510NHW	Frame DELTA miro for front module	N1410	317
AQR2530NNW	Front module for base module, without sensor	N1411	192
AQR2531ANW	Front module with passiv temperature measurement, LG-Ni1000	N1408	317
AQR2532NNW	Front module for base modules, temperature (active)	N1411	192
AQR2534ANW	Front module for base module, humidity and temperature (active, LG-Ni1000)	N1411	192
AQR2535NNW	Front module for base modules, humidity and temperature (active)	N1411	192
AQR2535NNWQ	Front module for base module, humidity and temperature, with LED	N1411	192
AQR2540NF	Base module for temperature and humidity measurement, 70.8 x 70.8 mm	N1410	318
AQR2540NG	Base module for temperature and humidity measurement, 110 x 64 mm	N1410	318
AQR2540NH	Base module for temperature and humidity measurement, 83 x 83 mm	N1410	318
AQR2546NF	Base module with integrated CO_2 measurement , 70.8 x 70.8 mm	N1410	349
AQR2546NG	Base module with integrated CO_2 measurement , 110 x 64 mm	N1410	349
AQR2546NH	Base module with integrated CO_2 measurement , 83 x 83 mm	N1410	349
AQR2547NF	Base module with integrated VOC measurement , 70.8 x 70.8 mm	N1410	348
AQR2548NF	Base module with integrated CO_2 and VOC measurement , 70.8 x 70.8 mm	N1410	351
AQR2570NF	Base module for temperature and / or humidity measurement, with KNX / PL-Link, 70.8 x 70.8	N1411	193
AQR2570NG	Base module for temperature and / or humidity measurement, with KNX / PL-Link, 110 x 64	N1411	193
AQR2570NH	Base module for temperature and / or humidity measurement, with KNX / PL-Link, 83 x 83	N1411	193
AQR2570NJ	Base module for temperature and / or humidity measurement, with KNX / PL-Link, 64 x 110	N1411	193
AQR2576NF	Base module for CO_2 measurement, with KNX / PL-Link, 70.8 x 70.8 mm	N1411	193
AQR2576NG	Base module for CO_2 measurement, with KNX / PL-Link, 110 x 64 mm	N1411	193
AQR2576NH	Base module for CO_2 measurement, with KNX / PL-Link, 83 x 83 mm	N1411	193
AQR2576NJ	Base module for CO_2 measurement, with KNX / PL-Link, 64 x 110 mm	N1411	193
AQS2100	Sensor module for replacement		355
AQS2700	Sensor module for replacement	A6V11160938	354
AQY2010	Remote sensing cable 3 m for sensor tip	N1859	336
ARG100.01	Mounting frame set ARG100.01	A6V11190640	232
ARG101	Adapter plate ARG101	N3009	223
ARG200	Mounting adapter for RDG2..	A6V11545853	251
ARG22.1	Changeover cable holder for QAP..	N1831	330
ARG22.2	Aluminium bar attachment for QAP..	N1831	330
ARG62.201	Front panel mounting frame	N3101	108
ARG70	Mounting plate 120 x 120 mm for 4 x 4" housing	N3009	251
ARG70.2	Mounting plate 112 x 130 mm for surface wiring	N3009	252
ARG70.3	Mounting bracket 10 mm thick	N3009	242
ARG810.1	Hotel Key Card ARG810.1		286
ARG820.1	Door Bell with DND ARG820.1		286
ARG830.1	Door Bell with DND & MUR ARG830.1		286
ARG86.3	Changeover cable holder for QAH11..	N3009	251
ASA04H	Third-party valve adapter on Beulco valve		417
ASA10	Third-party valve adapter on Strawa valve		417
ASA26	Third-party valve adapter on Giacomini valve		417
ASA59	Third-party valve adapter on Danfoss RAV/L valve		417
ASA72	Third-party valve adapter on Danfoss RAV valve		417

New Product

Product no.	Product Title	Data sheet	Page
ASA78	Third-party valve adapter on Danfoss RA valve		417
ASA80	Valve adapter for M30x1.5 valve		417
ASC1.6	Auxiliary switch for SKB6../ SKC6../ SKD6..	N4566	453
ASC10.21	Double auxiliary switch	N4520	585
ASC10.42	Double auxiliary switch for SQV..P..	N4833	444
ASC10.51	Auxiliary switch for SA..31../SA..61../SA..81..	N4501	436
ASC2.1/18	Auxiliary switch for SFA21.../ SFA71.../ SFP21.../ SFP71...	N4863	425
ASC36	Double auxiliary switch for SQL36E	N4505	584
ASC77.1E	External auxiliary switch assembly 1 switch	N4615	644
ASC77.2E	External auxiliary switch assembly 2 switches	N4615	644
ASC9.3	Double auxiliary switch for SKB/ C/ D32../82..	N4561	453
ASE1	Replacement electronic for MXG461.., MXF461.. and MXG461S.., DN15...32	N4455	523
ASE12	Replacement electronic for MXG461B.., MVF461H.. and MXG462S..		481
ASE2	Replacement electronic for MXG461.., MXF461.., DN40...65	N4455	523
ASK30	Adapter to upgrade older Landis&Gyr valves	N4573	435
ASK31N	Mounting set for SAL..T10 onto VBF21.., DN65..150 with ASK31N	N4502	583
ASK32N	Mounting set for SAL..T10 onto VBF21.., DN40..50 with ASK32N	N4502	583
ASK33N	Mounting set for SAL.. onto VKF41.., without VKF41..U types	N4502	583
ASK35N	Mounting set for SAL.. onto VKF45..	N4502	583
ASK39.1	Weathershield for SAX../SAL..	N4501	439
ASK39.2	Weathershild for SAS../SAT../SAK..		436
ASK39.3	Waterproof shield for ASK 39.3		623
ASK41NF04SP	Manual override for VFW41../VFL41.., DN40 to DN65	A6V12436917	618
ASK41NF05SP	Manual override for VFW41../VFL41.., DN80 to DN125	A6V12436917	618
ASK41NF07SP	Manual override for VFW41../VFL41.., DN150 to DN200	A6V12436917	618
ASK41NF10SP	Manual override for VFW41../VFL41.., DN250 to DN400	A6V12436917	618
ASK50	Stroke inverter for SKD..	N4561	453
ASK51	Stroke inverter for SKB..	N4564	453
ASK55.2	Clamp for linkage (5...8 mm dia.)	N4698	670
ASK71.01	Accessory Kit, GEB/GMA	N4697	644
ASK71.02	Accessory Kit, GIB/GBB/GCA	N4699	581
ASK71.03	Mounting Bracket, GM	N4699	581
ASK71.04	Mounting Bracket, BG	N4698	169
ASK71.05	Position Indicator, BG	N4698	169
ASK71.06	Standard Shaft Adapter, GM	N4699	581
ASK71.07	Mounting Bracket, GS	N4697	644
ASK71.08	Mounting Bracket, BG, short	N4698	169
ASK71.1	Rotary/linear mounting kit for duct mounting	N4699	647
ASK71.11	Rotary/linear mounting kit for duct or frame mounting	N4697	644
ASK71.13	Rotary/linear mounting kit with lever and bracket	N4697	644
ASK71.14	Rotary/linear mounting kit with lever	N4697	644
ASK71.19	Turnkey for manual adjustment	N4699	647
ASK71.2	Rotary/linear mounting kit for frame mounting	N4699	647
ASK71.20	Turnkey for manual adjustment	N4697	644
ASK71.21	Centering insert 2 x square 10 mm	N4698	169
ASK71.3	Rotary/linear mounting kit with lever	N4699	647
ASK71.4	Rotary/linear mounting kit with lever and bracket	N4699	647
ASK71.5	Rotary/linear mounting kit	N4698	652
ASK71.6	Rotary/linear mounting kit with bracket	N4698	652
ASK71.9	Crank Arm, Universal	N4697	644
ASK73.1	Bracket for power pack	N4699	647
ASK73.2	Flexible bracket for power pack	N4699	647
ASK74.1	Special shaft adapter	N4699	647
ASK74.12	Standard Shaft adapter, GEB/GMA, complete	N4697	644

Product no.	Product Title	Data sheet	Page
ASK74.13	Shaft adapter, GS, square, 15mm, complete	N4697	644
ASK74.14	Shaft adapter, GS, square, 12mm	N4697	644
ASK74.15	Shaft adapter, GEB/GMA, square, 10mm, complete	N4697	644
ASK74.16	Shaft adapter, GS, square, 8mm	N4697	644
ASK74.17	Shaft adapter, GM, square, 15mm	N4699	644
ASK74.18	Shaft adapter, GM, square, 12mm	N4699	581
ASK74.19	Shaft adapter, GM, square, 10mm	N4699	581
ASK74.20	Shaft adapter, GM, square, 8mm	N4699	581
ASK74.23	Shaft Adapter for GSD/GPC		647
ASK74.7	Shaft extension	N4699	644
ASK75.1	Weather shield for rotary actuator	N4699	647
ASK75.3	Weather shield	N4697	644
ASK75.4	Weather shield for rotarytype actuator GBB/GCA/GIB...1E	N4699	647
ASK75.5	Weather shield for rotary-/linear-type actuator GDB/GLB	N4698	652
ASK75.6	Weather shield for rotary-/linear-type actuator GMA/GEB...E	N4697	644
ASK77.10	Buttefly valve mounting set DN80, DN100	N4119	616
ASK77.11	Buttefly valve mounting set DN125, DN150	N4119	616
ASK77.2	Mounting kit for rotary actuators GMA..1E with spring-return		590
ASK77.21	Ball valve mounting set, DN 65, DN 80, DN 100, DN 125	A6V11168935	587
ASK77.22	Ball valve mounting set, DN 150	A6V11168935	587
ASK77.23	Ball valve mounting set, DN65, DN80	A6V11168935	587
ASK77.3	Mounting kit for rotary actuators GDB..1E, GLB..1E, GDD..1E and GLD..1E without spring-return		590
ASK77.5	Mounting kits for rotary actuators with or without spring-return, for special types with switches or potentiometer		590
ASK77.9	Buttefly valve mounting set DN50, DN65	N4119	616
ASK78.10	Centering insert 12 mm dia.	N4698	652
ASK78.12	Centering insert D-profile fixed 12 mm dia. × 9 mm	N4698	652
ASK78.14	Centering insert 8 mm square	N4698	652
ASK78.3	Insert for small shaft dia.	N4698	652
ASK78.5	Centering insert 12.7 mm dia. (½")	N4698	652
ASK78.6	Centering insert 8 mm square	N4698	652
ASK78.7	Centering insert 10 mm square	N4698	652
ASK78.9	Centering insert 10 mm dia.	N4698	652
ASK79.4	Duct tip for temperature monitor unit (72 °C)	N4697	685
ASK79.5	Duct tip for temperature monitor unit (95 °C)	N4697	685
ASP1.1	AC 230 V adapter for SQV..P..	N4833	444
ASR0.16N	Valve insert, kvs 0.16 m³/h	N4716	625
ASR0.4N	Valve insert, kvs 0.4 m³/h	N4716	625
ASR1.0N	Valve insert, kvs 1 m³/h	N4716	625
ASR2.5N	Valve insert, kvs 2.5 m³/h	N4716	625
ASR6.3N	Valve insert, kvs 6.3 m³/h	N4716	625
ASR61	Replacement electronic for MVL661.. and MVS661..N	N4714	481
ASR61EX	Replacement electronic for MVL661..EX and MVS661..EX		625
ASR70	PTC conductive heating element		625
AST20	Handheld tool for VAV compact controllers	A6V10631836	679
AST22	Interface Converter USB/PPS2	A6V11236956	679
ASV181.1E/3	VAV modular controller	N3545	683
ASY100	Terminal block connector DC0...10 V, AC 24 V for SSA61../SSB61../SSP61../SSD61..	N4864	427
ASY21L10	Connecting cable, On/Off, PVC, 1 m		419
ASY21L100	Connecting cable, On/Off, PVC, 10 m		419
ASY21L100H	Connecting cable, On/Off, HF, 10 m		419
ASY21L10H	Connecting cable, On/Off, HF, 1 m		419
ASY21L20	Connecting cable, On/Off, PVC, 2 m		419

New Product

Product no.	Product Title	Data sheet	Page
ASY21L50	Connecting cable, On/Off, PVC, 5 m		419
ASY21L50H	Connecting cable, On/Off, HF, 5 m		419
ASY3L25	Connecting cable, 2.5 m, 3-position, AC 230 V		427
ASY3L45	Connecting cable, 4.5 m, 3-position, AC 230 V		427
ASY61L10	Connecting cable, 0...10 V, PVC, no feedback, 1 m		419
ASY61L100	Connecting cable, 0...10 V, PVC, no feedback, 10 m		419
ASY61L100H	Connecting cable, 0...10 V, HF, no feedback, 10 m		419
ASY61L10H	Connecting cable, 0...10 V, HF, no feedback, 1 m		419
ASY61L20	Connecting cable, 0...10 V, PVC, no feedback, 2 m		419
ASY61L50	Connecting cable, 0...10 V, PVC, no feedback, 5 m		419
ASY61L50H	Connecting cable, 0...10 V, HF, no feedback, 5 m		419
ASY62L10	Connecting cable, 0...10 V, PVC, with feedback, 1 m		419
ASY62L100	Connecting cable, 0...10 V, PVC, with feedback, 10 m		419
ASY62L100H	Connecting cable, 0...10 V, HF, with feedback, 10 m		419
ASY62L10H	Connecting cable, 0...10 V, HF, with feedback, 1 m		419
ASY62L20	Connecting cable, 0...10 V, PVC, with feedback, 2 m		419
ASY62L50	Connecting cable, 0...10 V, PVC, with feedback, 5 m		419
ASY62L50H	Connecting cable, 0...10 V, HF, with feedback, 5 m		419
ASY6L25	Connecting cable, 2.5 m, DC 0...10 V, AC/DC 24 V		427
ASY6L45	Connecting cable, 4.5 m, DC 0..10 V, AC/DC 24 V		427
ASY6L45HF	Connecting cable, 4.5 m, DC 0...10 V, AC/DC 24 V, halogen-free, VDE 0207-24		427
ASY8L25	Connecting cable, 2.5 m, 3-position, AC 24 V		427
ASY8L45	Connecting cable, 4.5 m, 3-position, AC 24 V		427
ASY8L45HF	Connecting cable, 4.5 m, 3-position, AC 24 V, halogen-free, VDE 0207-24		427
ASY98	Retaining screw for cable connector		424
ASY99	Terminal block connector 3 position, AC 24 V for SSA81../SSB81../SSD81../SSP81..		427
ASZ36	Potentiometer 1000 Ohm for SQL36E..	N4505	584
ASZ6.6	Stem heating element for media < 0 °C	N4501	439
ASZ7.3	Potentiometer 0...1000 Ohm for SKB/ C/ D32../82..	N4564	453
ASZ7.5/1000	Potentiometer 0...1000 Ohm for SA..31../SA..81..	N4501	439
ASZ7.6/1000	Potentiometer 0...1000 Ohm for SQV..P..	N4833	444
ATN4	Manual knob, white, for VDN../VEN../VUN../VPD../VPE..	N2100	486
AUZ3.1	Analog 24-hour time switch	N2464	75
AUZ3.7	Analog 7-day time switch	N2464	75
AV306	Higher sliding sleeve adapter (bayonet), 5 mm	N2100	416
AVN15-15	Compression fitting ½", for 15 mm copper and soft steel pipes	N2100	486
AVN15A16	Compression fitting ½", for 16x2 mm plastic pipes with aluminum foil	N2100	486
AZX420	Function module 4...20 mA for SBX61, SBV61	N4519	438
AZX61.1	Funtion module for SA..61.., sequence control/changeover of acting direction	N4501	439
BAU200	Universal digital indicator	N5312	136
BOZ4002	Square bolt 4.5 mm with cross pin	N2886	707
BOZ4003	Square bolt 6 mm with cross pin	N2886	707
BOZ4004	Square bolt 12 mm with cross pin	N2886	707
C/VVI41.15-2.5	2-port valve, internal thread, PN16, DN15, kvs 2.5	N4362	495
C/VVI41.15-4	2-port valve, internal thread, PN16, DN15, kvs 4	N4362	495
C/VVI41.20-6.3	2-port valve, internal thread, PN16, DN20, kvs 6.3	N4362	495
C/VVI41.25-10	2-port valve, internal thread, PN16, DN25, kvs 10	N4362	495
C/VVI41.32-16	2-port valve, internal thread, PN16, DN32, kvs 16	N4362	495
C/VVI41.40-25	2-port valve, internal thread, PN16, DN40, kvs 25	N4362	495
C/VVI41.50-40	2-port valve, internal thread, PN16, DN50, kvs 40	N4362	495
C/VXI41.15-2.5	3-port valve, internal thread, PN16, DN15, kvs 2.5	N4362	532
C/VXI41.15-4	3-port valve, internal thread, PN16, DN15, kvs 4	N4362	532
C/VXI41.20-6.3	3-port valve, internal thread, PN16, DN20, kvs 6.3	N4362	532
C/VXI41.25-10	3-port valve, internal thread, PN16, DN25, kvs 10	N4362	532

Product no.	Product Title	Data sheet	Page
C/VXI41.32-16	3-port valve, internal thread, PN16, DN32, kvs 16	N4362	532
C/VXI41.40-25	3-port valve, internal thread, PN16, DN40, kvs 25	N4362	532
C/VXI41.50-40	3-port valve, internal thread, PN16, DN50, kvs 40	N4362	532
CU230P-2 CAN	G120P Control Unit, CANopen		699
CU230P-2 DP	G120P Control Unit, PROFIBUS DP		699
CU230P-2 PN	G120P Control Unit, PROFINET IO		699
CU230P-2-BT	G120P Control Unit, USS, Modbus, BACnet		699
CWG.BOX-EU	Connect Box Hardware		210
CWG.BOX-NA	Connect Box Hardware		211
CWG.L1-ADD2	Connect Box License 1 Year 50 DP		211
CWG.L1-ADD3	Connect Box License 1 Year 1000 DP		211
CWG.L1-IOT	Connect Box License 1 Year IoT		211
CWG.L1-L	Connect Box License 1 Year L		211
CWG.L1-M	Connect Box License 1 Year M		211
CWG.L1-S	Connect Box License 1 Year S		211
CWG.L1-SAT	Connect Box License 1 Year Sat.		211
CWG.L3-ADD2	Connect Box License 3 Year 50 DP		212
CWG.L3-ADD3	Connect Box License 3 Year 1000 DP		212
CWG.L3-IOT	Connect Box License 3 Year IoT		212
CWG.L3-L	Connect Box License 3 Year L		212
CWG.L3-M	Connect Box License 3 Year M		212
CWG.L3-S	Connect Box License 3 Year S		212
CWG.L3-SAT	Connect Box License 3 Year Sat.		212
CWG.L5-ADD2	Connect Box License 5 Year 50 DP		212
CWG.L5-ADD3	Connect Box License 5 Year 1000 DP		212
CWG.L5-IOT	Connect Box License 5 Year IoT		212
CWG.L5-L	Connect Box License 5 Year L		212
CWG.L5-M	Connect Box License 5 Year M		212
CWG.L5-S	Connect Box License 5 Year S		212
CWG.L5-SAT	Connect Box License 5 Year Sat.		212
CWG.L6-ADD1	Connect Box (on-premise) License - Upgrade from IoT or Small to Medium		213
CWG.L6-ADD2	Connect Box (on-premise) License Upgrade from Medium to Large		213
CWG.L6-ADD3	Connect Box (on-premise) License Upgrade from Large to XLarge		213
CWG.L6-IOT	Connect Box License (on-premise) IoT		213
CWG.L6-L	Connect Box License (on-premise) L		213
CWG.L6-M	Connect Box License (on-premise) M		213
CWG.L6-R	Connect Box License (on-premise) renew		213
CWG.L6-S	Connect Box License (on-premise) S		213
CWG.L6-XL	Connect Box License (on-premise) XL		213
DXA.B130	Cable Sash Sensor, 1270 mm	A6V11178716	181
DXA.B200	Cable Sash Sensor, 2032 mm	A6V11178716	181
DXA.FH02-1	DXA.FH02-1 Fume Hood Control Box	A6V12987470	181
DXA.H110	Terminal cover for DXR.., 110 mm, 2 pieces		178
DXA.H180	Terminal cover for DXR.., 180 mm, 2 pieces		178
DXA.S04P1	Communicative Air Flow Pressure Sensor (250 Pa / 1"WC)		375
DXA.S04P1-B	Communicative Air Flow Pressure Sensor IP54 (250 Pa / 1"WC)		180
DXA.T50	Air tube connection kit 50mm DXA.T50		673
DXR1.E02PLZ-112	Compact, configurable room automation station and actuator combination, BACnet/IP, 24 V, pressure sensor, VAV011 (VAV012)	A6V11393935	676
DXR1.E09PDZ-112	Compact, configurable room automation station and actuator combination, BACnet/IP, 5 Nm, 24 V, 2 UI, 1 AO, 4 triac, pressure sensor, VAV044	A6V11393931	675
DXR1.E09PDZ-112/CA	Compact, configurable room automation station and actuator combination, BACnet/IP, 5 Nm, 24 V, 2 UI, 1 AO, 4 triac, pressure sensor, VAV044, CA engineering unit	A6V11393931	675

New Product

Product no.	Product Title	Data sheet	Page
DXR1.E09PDZ-113	Compact, configurable room automation station and actuator combination, BACnet/IP, 5 Nm, 24 V, 2 UI, 1 AO, 4 triac, pressure sensor, FPB052	A6V11393931	675
DXR1.E09PLZ-112	Compact, configurable room automation station and actuator combination, BACnet/IP, 10 Nm, 24 V, 2 UI, 1 AO, 4 triac, pressure sensor, VAV044	A6V11393931	675
DXR1.E10PL-112	Compact, configurable room automation station and actuator combination, BACnet/IP, 24 V, 1 DI, 2 UI, 1 AO, 4 triac, pressure sensor, VAV045	A6V11393933	677
DXR1.E10PL-112/US	Compact, configurable room automation station and actuator combination, BACnet/IP, 24 V, 1 DI, 2 UI, 1 AO, 4 triac, pressure sensor, VAV045 US engineering unit	A6V11393933	677
DXR1.E10PL-113	Compact, configurable room automation station and actuator combination, BACnet/IP, 24 V, 1 DI, 2 UI, 1 AO, 4 triac, pressure sensor, FPB053	A6V11393933	677
DXR1.E10PL-113/US	Compact, configurable room automation station and actuator combination, BACnet/IP, 24 V, 1 DI, 2 UI, 1 AO, 4 triac, pressure sensor, FPB053, US engineering unit	A6V11393933	677
DXR1.M09PDZ-112	Compact, configurable room automation station and actuator combination, BACnet/MSTP, 5 Nm, 24 V, 2 UI, 1 AO, 4 triac, pressure sensor, VAV044	A6V11393929	678
DXR1.M09PDZ-112/US	Open Air Intelligent VAV 44 lb-in BACnet MS/TP	A6V11393929	678
DXR1.M09PDZ-113	Compact, configurable room automation station and actuator combination, BACnet/MSTP, 5 Nm, 24 V, 2 UI, 1 AO, 4 triac, pressure sensor, FPB052	A6V11393929	678
DXR1.M09PDZ-113/US	Intelligent Variable Air Volume Actuator (FPB) DXR1.M09PDZ-..	A6V11393929	678
DXR1.M09PLZ-112	Compact, configurable room automation station and actuator combination, BACnet/MSTP, 10 Nm, 24 V, 2 UI, 1 AO, 4 triac, pressure sensor, VAV044	A6V11393929	678
DXR2.E09-101A	Compact room automation station, BACnet/IP, 230 V, flat housing, 1 DI, 2 UI, 3 relay, 3 AO	N9204	175
DXR2.E09-101A/BP	Compact room automation station, BACnet/IP, 230 V, flat housing, 1 DI, 2 UI, 3 relay, 3 AO, bulk pack 18 pcs.	N9204	175
DXR2.E09T-101A	Compact room automation station, BACnet/IP, 230 V, flat housing, 1 DI, 2 UI, 1 relay, 1 AO, 4 triac	N9204	176
DXR2.E09T-101A/BP	Compact room automation station, BACnet/IP, 230 V, flat housing, 1 DI, 2 UI, 1 relay, 1 AO, 4 triac, bulk pack 18 pcs.	N9204	176
DXR2.E10-101A	Compact room automation station, BACnet/IP, 230 V, flat housing, 1 DI, 2 UI, 3 relay, 4 triac	N9204	177
DXR2.E10-101A/BP	Compact room automation station, BACnet/IP, 230 V, flat housing, 1 DI, 2 UI, 3 relay, 4 triac, bulk pack 18 pcs.	N9204	177
DXR2.E10PL-102B	Compact room automation station and actuator combination, BACnet/IP, 24 V, 1 DI, 2 UI, 1 AO, 4 triac, pressure sensor, 30 data points	A6V11259958	178
DXR2.E10PLX-102B	Compact room automation station, BACnet/IP, 24 V, DIN housing, 1 DI, 2 UI, 1 AO, 4 triac, pressure sensor, 60 data points	A6V11259958	178
DXR2.E12P-102A	Compact room automation station, BACnet/IP, 24 V, DIN housing, 1 DI, 2 UI, 2 AO, 6 triac, pressure sensor, 30 data points	N9205	173
DXR2.E12P-102A/BP	Compact room automation station, BACnet/IP, 24 V, DIN housing, 1 DI, 2 UI, 2 AO, 6 triac, pressure sensor, 30 data points, bulk pack 18 pcs.	N9205	173
DXR2.E17C-103A	Compact Room Automation Station (30DP)	N9205	179
DXR2.E17CX-103A	Compact Room Automation Station (60DP)	N9205	180
DXR2.E18-101A	Compact room automation station, BACnet/IP, 24 V, DIN housing, 2 DI, 4 UI, 4 AO, 8 triac, (Fancoil, Radiant ceilling, Radiator, 4 Lights & 2 Shades)	N9205	174
DXR2.E18-101A/BP	Compact room automation station, BACnet/IP, 24 V, DIN housing, 2 DI, 4 UI, 4 AO, 8 triac, bulk pack 18 pcs.	N9205	174
DXR2.E18-102A	Compact room automation station, BACnet/IP, 24 V, DIN housing, 2 DI, 4 UI, 4 AO, 8 triac, (Variable air volume, Fan-powered box, Radiant ceilling, Radiator, 4 Lights & 2 Shades)	N9205	174
DXR2.E18-102A/BP	Compact room automation station, BACnet/IP, 24 V, DIN housing, 2 DI, 4 UI, 4 AO, 8 triac, bulk pack 18 pcs.	N9205	174
DXR2.M10PL-102B	Compact room automation station and actuator combination, BACnet/MSTP, 24 V, 1 DI, 2 UI, 1 AO, 4 triac, pressure sensor, 30 data points	A6V11259964	674
DXR2.M10PLX-102B	Compact room automation station, BACnet/MSTP, 24 V, DIN housing, 1 DI, 2 UI, 1 AO, 4 triac, pressure sensor, 60 data points	A6V11259964	674
EVF4U20E065	Intelligent Valve DN 65 as a sensor controlled pressure independent control valve PN16 with flanged connection including flow and capacity measurement for a maximum flow of 30 m^3/h	A6V11444716	545

Product no.	Product Title	Data sheet	Page
EVF4U20E080	Intelligent Valve DN 80 as a sensor controlled pressure independent control valve PN16 with flanged connection including flow and capacity measurement for a maximum flow of 48 m³/h.	A6V11444716	545
EVF4U20E100	Intelligent Valve DN 100 as a sensor controlled pressure independent control valve PN16 with flanged connection including flow and capacity measurement with a maximum flow of 75 m³/h	A6V11444716	545
EVF4U20E125	Intelligent Valve DN 125 as a sensor controlled pressure independent control valve PN16 with flanged connection including flow and capacity measurement with a maximum flow of 120 m³/h	A6V11444716	545
EVG4U10E015	Intelligent Valve DN15 as a sensor controlled pressure independent control valve PN16 with threaded connection including with flow and capacity measurement for a maximum flow of 1.5 m³/h.	A6V11444716	556
EVG4U10E020	Intelligent Valve DN20 as a sensor controlled pressure independent control valve PN16 with threaded connection including with flow and capacity measurement for a maximum flow of 3 m³/h.	A6V11444716	556
EVG4U10E025	Intelligent Valve DN25 as a sensor controlled pressure independent control valve PN16 with threaded connection including flow and capacity measurement for a maximum flow of 4.5 m³/h	A6V11444716	556
EVG4U10E032	Intelligent Valve DN32 as a sensor controlled pressure independent control valve PN16 with threaded connection including with flow and capacity measurement for a maximum flow of 7 m³/h.	A6V11444716	556
EVG4U10E040	Intelligent Valve DN 40 as a sensor controlled pressure independent control valve PN16 with threaded connection including with flow and capacity measurement for a maximum flow of 11.5 m³/h.	A6V11444716	556
EVG4U10E050	Intelligent Valve DN 50 as a sensor controlled pressure independent control valve PN16 with threaded connection including with flow and capacity measurement for a maximum flow of 18 m³/h	A6V11444716	556
EXF4U20E065	Intelligent Valve DN65 3-Port configuration as a sensor controlled pressure independent control valve PN16 with flanged connection including flow and capacity measurement for flows up to 20 m³/h	A6V11444716	547
EXF4U20E080	Intelligent Valve DN80 3-Port configuration as a sensor controlled pressure independent control valve PN16 with flanged connection including flow and capacity measurement for flows up to 32 m³/h	A6V11444716	547
EXF4U20E100	Intelligent Valve DN100 3-Port configuration as a sensor controlled pressure independent control valve PN16 with flanged connection including flow and capacity measurement for flows up to 50 m³/h	A6V11444716	547
EXG4U10E015	Intelligent Valve DN15 3-Port configuration as a sensor controlled pressure independent control valve PN16 threaded connection including flow and capacity measurement for flows up to 1.2 m³/h	A6V11444716	558
EXG4U10E020	Intelligent Valve DN20 3-Port confi guration as a sensor controlled pressure independent control valve PN16 threaded connection including flow and capacity measurement for flows up to 2 m³/h	A6V11444716	558
EXG4U10E025	Intelligent Valve DN25 3-Port configuration as a sensor controlled pressure independent control valve PN16 threaded connection including flow and capacity measurement for flows up to 3.2 m³/h	A6V11444716	558
EXG4U10E032	Intelligent Valve DN32 3-Port configuration as a sensor controlled pressure independent control valve PN16 threaded connection including flow and capacity measurement for flows up to 5 m³/h	A6V11444716	558
EXG4U10E040	Intelligent Valve DN40 3-Port configuration as a sensor controlled pressure independent control valve PN16 threaded connection including flow and capacity measurement for flows up to 8 m³/h	A6V11444716	558
EXG4U10E050	Intelligent Valve DN50 3-Port configuration as a sensor controlled pressure independent control valve PN16 threaded connection including flow and capacity measurement for flows up to 12 m³/h	A6V11444716	558
EZT-M40	Protection pocket G ¼ B, M10x1, brass, Ø 5.2x40 mm, for temperature sensor Ø 5.2x26 mm	A6V11444716	557
EZU10-10025	Pair of temperature sensors Pt1000, length 100 mm, ø 6 mm, type PL, cable length 2.5 m	A6V11444716	546
EZU10-10060	Pair of temperature sensors Pt1000, length 100 mm, ø 6 mm, type PL, cable length 6 m	A6V11444716	546

New Product

Product no.	Product Title	Data sheet	Page
EZU10-2615	Pair of temperature sensors Pt1000, length 26.5 mm, ø 5.2 mm, type DS, with screw connector M10 × 1, cable length 1.5 m	A6V11444716	557
EZU-WA	Wall mount socket for Intelligent Valve Controller Box ASE4U10E		546
EZU-WB	Spacer for mounting Intelligent Valve Controller Box ASE4U10E with a 25 mm distance on the flow sensor		546
FBCRAA/KS	Backup battery for WT.16..		738
FGT-PT1000	Flue gas temperature sensor Pt1000	N1846	329
FKA0001	Prism for installation plate	N2886	707
FKA0003	Clamping piece (threaded hoop 17 mm)	N2886	707
FKA0004	Expanding bracket of lamella-type radiator	N2886	707
FKA0008	Clamping piece (threaded hoop 18...30 mm)	N2886	707
FKA0009	Installation plate for remote sensor	N2886	707
FKA0010	Contact screw	N2886	707
FKA0011	Contact screw long	N2886	707
FKA0012	Threaded bushing	N2886	707
FKA0013	Spacer	N2886	707
FKA0017	Mounting plate (P3)	N2886	707
FKA0022	Mounting plate wide	N2886	707
FKK0034	Snap-on panel	N2886	707
FKK0041	Lead seal blue	N2886	707
FKK0044	Wall bracket (P3)	N2886	707
FKM0002	Clamping sleeve special radiator	N2886	707
FKM0018	Fitting R ½“ x G ¾“	N5323	720
FKM0019	Fitting R ¾“ x G ¾“	N5323	720
FKM0020	Fitting R 1“ x G ¾“	N5323	720
FKM0021	Fitting R ¾“ x G 1“	N5323	720
FKM0022	Fitting R 1“ x G 1"	N5323	720
FKM0023	Ball valve Rp ½“ with thread	N5323	720
FKM0024	Ball valve Rp ¾“ with thread	N5323	720
FKM0025	Ball valve Rp 1" with thread	N5323	720
FKM0026	Ball valve Rp ½“ with coupling nut and thread	N5323	720
FKM0035	T-piece R ½“ x G ¼“	N5323	720
FKM0036	T-piece R ¾“ x G ¼“	N5323	720
FKM0037	T-piece R 1“ x G ¼“	N5323	720
FKM0038	Immersion sleeve G ¼“	N5323	720
FKM0039	Immersion sleeve G ¼“	N5323	720
FKM0049	Temperatur sensor sleeve G ¼“	N5323	720
FKM0050	Temperatur sensor sleeve M10x1 mm	N5323	720
FKM0051	Immersion sleeve 5.0 mm, M10x1 mm	N5323	720
FKM0052	Immersion sleeve 5.2 mm, M10x1 mm	N5323	720
FKM0070	Spacer G ¾“, length 80 mm	N5323	720
FKM0074	Spacer G ¾“, length 110 mm	N5323	720
FKM0075	Spacer G 1", length 130 mm	N5323	720
FK-PZ1	Air duct probe for simple, quick and airtight mounting	N1589	363
FK-PZ2	Air duct probe for accurate measurements	N1589	363
FK-PZ3	Air duct probe for differential pressure sensor, fixed length	N1589	363
FKS0005	Flat gasket ¾“	N5323	720
FKS0006	Flat gasket 1“	N5323	720
FKT0004	Threaded hoop (pipe up to 17 mm)	N2886	707
FKT0009	Clamping bracket shortened	N2886	707
FKT0010	Spacer sleeve	N2886	707
FKT0011	Welding stud M3 x 12 mm	N2886	707
FKT0012	Welding stud M3 x 15 mm	N2886	707
FKT0013	Welding stud M3 x 8 mm	N2886	707

Product no.	Product Title	Data sheet	Page
FKT0014	Threaded hoop (pipe 18...30 mm)	N2886	707
FKT0015	Clamping bracket (pipes TE 36 mm)	N2886	707
FKT0016	Clamping bracket (pipes TE 46 mm)	N2886	707
FKT0017	Installation aid (convector)	N2886	707
FKT0018	Clamping bracket trapezoidal 35 mm	N2886	707
FKT0019	Clamping bracket trapezoidal 50 mm	N2886	707
FKT0020	Clamping bracket trapezoidal 65 mm	N2886	707
FK-TP/200	Duct temperature sensor Pt100, for high temperature	N1778	320
FK-TZ1	Set of 6 capillary supports	N1284	306
FNM0001	Shank nut M3 x 9.5 mm	N2886	707
FNM0002	Shank nut M3 x 3 mm	N2886	707
FNM0003	Shank nut M3 x 6 mm	N2886	707
FNM0005	Self-locking nut with serrated bearing M3	N2886	707
FNR0003	Cross-slot screw M4 x 30 mm	N2886	707
FNR0004	Cross-slot screw M4 x 40 mm	N2886	707
FNR0005	Cross-slot screw M4 x 50 mm	N2886	707
FNR0006	Cross-slot screw M4 x 70 mm	N2886	707
FNR0007	Screw B 3.9 x 45 mm	N2886	707
FNR0008	Self-tapping screw B 2.9 x 13 mm	N2886	707
FNS0001	Seal	N5323	720
FNU0001	Dowel 6 mm	N2886	707
FOZ0001	Cable duct white	N2886	707
FSS0007	ERGO universal instant glue 3g	N2886	707
FT-PZ1	Connection set, thread ½" for pressure sensor for refrigerant	N1907	373
FT-TP/100	Immersion temperature sensor 100 mm, Pt100, -70...260°C, direct immersion	N1797	326
FT-TP/400	Immersion temperature sensor 400 mm, Pt100, direct immersion	N1797	326
FZ201-009	Torque Screwdriver, Torx Plus™		712
G120P-0.75/32A	Variable Speed Drive G120P, FSA, IP20, Filter A, 0.75 kW	N5111	698
G120P-0.75/32B	Variable Speed Drive G120P, FSA, IP20, Filter B, 0.75 kW	N5111	697
G120P-0.75/35A	Variable Speed Drive G120P, FSA, IP55, Filter A, 0.75 kW	N5111	696
G120P-0.75/35B	Variable Speed Drive G120P, FSA, IP55, Filter B, 0.75 kW	N5111	695
G120P-1.1/32A	Variable Speed Drive G120P, FSA, IP20, Filter A, 1.1 kW	N5111	698
G120P-1.1/32B	Variable Speed Drive G120P, FSA, IP20, Filter B, 1.1 kW	N5111	697
G120P-1.1/35A	Variable Speed Drive G120P, FSA, IP55, Filter A, 1.1 kW	N5111	696
G120P-1.1/35B	Variable Speed Drive G120P, FSA, IP55, Filter B, 1.1 kW	N5111	695
G120P-1.5/32A	Variable Speed Drive G120P, FSA, IP20, Filter A, 1.5 kW	N5111	698
G120P-1.5/32B	Variable Speed Drive G120P, FSA, IP20, Filter B, 1.5 kW	N5111	697
G120P-1.5/35A	Variable Speed Drive G120P, FSA, IP55, Filter A, 1.5 kW	N5111	696
G120P-1.5/35B	Variable Speed Drive G120P, FSA, IP55, Filter B, 1.5 kW	N5111	695
G120P-11/32A	Variable Speed Drive G120P, FSC, IP20, Filter A, 11 kW	N5111	698
G120P-11/32B	Variable Speed Drive G120P, FSA, IP20, Filter B, 11 kW	N5111	697
G120P-11/35A	Variable Speed Drive G120P, FSC, IP55, Filter A, 11 kW	N5111	696
G120P-11/35B	Variable Speed Drive G120P, FSC, IP55, Filter B, 11 kW	N5111	695
G120P-15/32A	Variable Speed Drive G120P, FSC, IP20, Filter A, 15 kW	N5111	698
G120P-15/32B	Variable Speed Drive G120P, FSC, IP20, Filter B, 15 kW	N5111	697
G120P-15/35A	Variable Speed Drive G120P, FSC, IP55, Filter A, 15 kW	N5111	696
G120P-15/35B	Variable Speed Drive G120P, FSC, IP55, Filter B, 15 kW	N5111	695
G120P-18.5/32A	Variable Speed Drive G120P, FSC, IP20, Filter A, 18.5 kW	N5111	698
G120P-18.5/32B	Variable Speed Drive G120P, FSC, IP20, Filter B, 18.5 kW	N5111	697
G120P-18.5/35A	Variable Speed Drive G120P, FSC, IP55, Filter A, 18.5 kW	N5111	696
G120P-18.5/35B	Variable Speed Drive G120P, FSD, IP55, Filter B, 18.5 kW	N5111	695
G120P-2.2/32A	Variable Speed Drive G120P, FSA, IP20, Filter A, 2.2 kW	N5111	698
G120P-2.2/32B	Variable Speed Drive G120P, FSA, IP20, Filter B, 2.2 kW	N5111	697
G120P-2.2/35A	Variable Speed Drive G120P, FSA, IP55, Filter A, 2.2 kW	N5111	696

Product no.	Product Title	Data sheet	Page
G120P-2.2/35B	Variable Speed Drive G120P, FSA, IP55, Filter B, 2.2 kW	N5111	695
G120P-22/32A	Variable Speed Drive G120P, FSD, IP20, Filter A, 22 kW	N5111	698
G120P-22/32B	Variable Speed Drive G120P, FSD, IP20, Filter B, 22 kW	N5111	697
G120P-22/35A	Variable Speed Drive G120P, FSD, IP55, Filter A, 22 kW	N5111	696
G120P-22/35B	Variable Speed Drive G120P, FSD, IP55, Filter B, 22 kW	N5111	695
G120P-3/32A	Variable Speed Drive G120P, FSA, IP20, Filter A, 3 kW	N5111	698
G120P-3/32B	Variable Speed Drive G120P, FSA, IP20, Filter B, 3 kW	N5111	697
G120P-3/35A	Variable Speed Drive G120P, FSA, IP55, Filter A, 3 kW	N5111	696
G120P-3/35B	Variable Speed Drive G120P, FSA, IP55, Filter B, 3 kW	N5111	695
G120P-30/32A	Variable Speed Drive G120P, FSD, IP20, Filter A, 30 kW	N5111	698
G120P-30/32B	Variable Speed Drive G120P, FSD, IP20, Filter B, 30 kW	N5111	697
G120P-30/35A	Variable Speed Drive G120P, FSD, IP55, Filter A, 30 kW	N5111	696
G120P-30/35B	Variable Speed Drive G120P, FSD, IP55, Filter B, 30 kW	N5111	695
G120P-37/32A	Variable Speed Drive G120P, FSE, IP20, Filter A, 37 kW	N5111	698
G120P-37/32B	Variable Speed Drive G120P, FSE, IP20, Filter B, 37 kW	N5111	697
G120P-37/35A	Variable Speed Drive G120P, FSE, IP55, Filter A, 37 kW	N5111	696
G120P-37/35B	Variable Speed Drive G120P, FSE, IP55, Filter B, 37 kW	N5111	695
G120P-4/32A	Variable Speed Drive G120P, FSB, IP20, Filter A, 4 kW	N5111	698
G120P-4/32B	Variable Speed Drive G120P, FSB, IP20, Filter B, 4 kW	N5111	697
G120P-4/35A	Variable Speed Drive G120P, FSB, IP55, Filter A, 4 kW	N5111	696
G120P-4/35B	Variable Speed Drive G120P, FSB, IP55, Filter B, 4 kW	N5111	695
G120P-45/32A	Variable Speed Drive G120P, FSE, IP20, Filter A, 45 kW	N5111	698
G120P-45/32B	Variable Speed Drive G120P, FSE, IP20, Filter B, 45 kW	N5111	697
G120P-45/35A	Variable Speed Drive G120P, FSE, IP55, Filter A, 45 kW	N5111	696
G120P-45/35B	Variable Speed Drive G120P, FSE, IP55, Filter B, 45 kW	N5111	695
G120P-5.5/32A	Variable Speed Drive G120P, FSB, IP20, Filter A, 5.5 kW	N5111	698
G120P-5.5/32B	Variable Speed Drive G120P, FSB, IP20, Filter B, 5.5 kW	N5111	697
G120P-5.5/35A	Variable Speed Drive G120P, FSB, IP55, Filter A, 5.5 kW	N5111	696
G120P-5.5/35B	Variable Speed Drive G120P, FSB, IP55, Filter B, 5.5 kW	N5111	695
G120P-55/32A	Variable Speed Drive G120P, FSF, IP20, Filter A, 55 kW	N5111	698
G120P-55/32B	Variable Speed Drive G120P, FSF, IP20, Filter B, 55 kW	N5111	697
G120P-55/35A	Variable Speed Drive G120P, FSF, IP55, Filter A, 55 kW	N5111	696
G120P-55/35B	Variable Speed Drive G120P, FSF, IP55, Filter B, 55 kW	N5111	695
G120P-7.5/32A	Variable Speed Drive G120P, FSB, IP20, Filter A, 7.5 kW	N5111	698
G120P-7.5/32B	Variable Speed Drive G120P, FSB, IP20, Filter B, 7.5 kW	N5111	697
G120P-7.5/35A	Variable Speed Drive G120P, FSB, IP55, Filter A, 7.5 kW	N5111	696
G120P-7.5/35B	Variable Speed Drive G120P, FSB, IP55, Filter B, 7.5 kW	N5111	695
G120P-75/32A	Variable Speed Drive G120P, FSF, IP20, Filter A, 75 kW	N5111	698
G120P-75/32B	Variable Speed Drive G120P, FSF, IP20, Filter B, 75 kW	N5111	697
G120P-75/35A	Variable Speed Drive G120P, FSF, IP55, Filter A, 75 kW	N5111	696
G120P-75/35B	Variable Speed Drive G120P, FSF, IP55, Filter B, 75 kW	N5111	695
G120P-90/35A	Variable Speed Drive G120P, FSF, IP55, Filter A, 90 kW	N5111	696
G120P-90/35B	Variable Speed Drive G120P, FSF, IP55, Filter B, 90 kW	N5111	695
G120P-AIRSHEET-FSA	G120P air guide sheet PM230, IP55, FSA	N5111	699
G120P-AIRSHEET-FSB	G120P air guide sheet PM230, IP55, FSB	N5111	699
G120P-AIRSHEET-FSC	G120P air guide sheet PM230, IP55, FSC	N5111	699
G120P-BCOVER	G120P blanking cover, IP55		699
G120P-BOP-2	G120P basic operator panel BOP-2, IP55	N5116	699
G120P-CUScreen	G120P CU230P-2 Screening Kit		699
G120P-DOOR-KIT	G120P Door mounting kit for IOP or BOP-2		699
G120P-FExtFSA-IP20	G120P PM Fan IP20, external, FSA		699
G120P-FExtFSA-IP55	G120P PM Fan IP55, external, FSA		699
G120P-FExtFSB-IP20	G120P PM Fan IP20, external, FSB		699
G120P-FExtFSB-IP55	G120P PM Fan IP55, external, FSB		699

Product no.	Product Title	Data sheet	Page
G120P-FExtFSC-IP20	G120P PM Fan IP20, external, FSC		699
G120P-FExtFSC-IP55	G120P PM Fan IP55, external, FSC		699
G120P-FExtFSDE-IP20	G120P PM Fan IP20, external, FSD-FSE		699
G120P-FExtFSDE-IP55	G120P PM Fan IP55, external, FSD-FSE		699
G120P-FExtFSF-IP20	G120P PM Fan IP20, external, FSF		699
G120P-FExtFSF-IP55	G120P PM Fan IP55, external, FSF		699
G120P-FIntFSAC-IP55	G120P PM Fan IP55, internal, FSA-FSC		699
G120P-FIntFSDF-IP55	G120P PM Fan IP55, internal, FSD-FSF		699
G120P-IOP-2-BT	G120P intelligent operator panel IOP-2-BT	N5116	699
G120P-IP55-PAN-EXT	Operator Panel Extension cable for G120P IP55		699
G120P-MSetFSA-IP55	G120P mounting parts set, PM230, IP55, FSA		699
G120P-MSetFSB-IP55	G120P mounting parts set, PM230, IP55, FSB		699
G120P-MSetFSC-IP55	G120P mounting parts set, PM230, IP55, FSC		699
G120P-MSetFSD-IP55	G120P mounting parts set, PM230, IP55, FSD		699
G120P-MSetFSE-IP55	G120P mounting parts set, PM230, IP55, FSE		699
G120P-MSetFSF-IP55	G120P mounting parts set, PM230, IP55, FSF		699
G120P-PC-Kit	G120P PC-Inverter Connection Kit-2		699
G120P-SAM	G120P-SAM Smart Access Module	N5116	699
G120P-Screen-FSA	G120P Screening-Kit, PM230 IP20 FSA		699
G120P-Screen-FSB	G120P Screening-Kit, PM230 IP20 FSB		699
G120P-Screen-FSC	G120P Screening-Kit, PM230 IP20 FSC		699
G120P-Screen-FSDE	G120P Screening-Kit, PM230 IP20 FSD-FSE		699
G120P-Screen-FSF	G120P Screening-Kit, PM230 IP20 FSF		699
G120P-Starter	STARTER Commissioning Tool for Sinamics and Micromaster Drives		699
GAP191.1E	Rotary air damper actuator, AC/DC 24 V, DC 0(2)...10 V/ 0(4)...20 mA, 6 Nm, 2 s	N4608	668
GAP191.1E/102	Rotary air damper actuator, AC/DC 24 V, DC 0(2)...10 V / 0(4)...20 mA, 6 Nm, 2 s	N4608	668
GAP191.1E/IHT	Rotary air damper actuators 6 Nm, without electronic fail-save function	A6V11991159	668
GAP196.1E	Rotary air damper actuator, AC/DC 24 V, DC 0(2)...10 V/ 0(4)...20 mA, 6 Nm, 2 s, 2 auxiliary switches	N4608	668
GBB131.1E	Rotary air damper actuator, AC 24 V, 3-position, 25 Nm, 150 s	N4626	658
GBB135.1E	Rotary air damper actuator, AC 24 V, 3-position, 25 Nm, 150 s, 2 auxiliary switches, potentiometer	N4626	658
GBB136.1E	Rotary air damper actuator, AC 24 V, 3-position, 25 Nm, 150 s, 2 auxiliary switches	N4626	658
GBB136.1E/102	Rotary air damper actuator, AC 24 V, 3-position, 25 Nm, 150 s, 2 auxiliary switches	N4626	658
GBB141.1E	Rotary air damper actuator 25 Nm, without spring return	A6V14252663	659
GBB145.1E	Rotary air damper actuator 25 Nm, without spring return	A6V14252663	659
GBB146.1E	Rotary air damper actuator 25 Nm, without spring return	A6V14252663	659
GBB161.1E	Rotary air damper actuator, AC 24 V, DC 0...10 V, 25 Nm, 150 s	N4626	658
GBB161.1E	Rotary air damper actuator 25 Nm, without spring return	A6V14252663	659
GBB161.1E/102	Rotary air damper actuators 25 Nm, AC 24 V, DC 0...10 V, 25 Nm, 150 s	N4626	658
GBB161.1H	Rotary air damper actuators 25 Nm, without spring return	A6V14252663	659
GBB163.1E	Rotary air damper actuator, AC 24 V, DC 0...35 V adjustable, 25 Nm, 150 s	N4626	658
GBB163.1E	Rotary air damper actuator 25 Nm, without spring return	A6V14252663	659
GBB163.1H	Rotary air damper actuators 25 Nm, without spring return	A6V14252663	659
GBB164.1E	Rotary air damper actuator 25 Nm, without spring return	A6V14252663	659
GBB164.1E	Rotary air damper actuator, AC 24 V, DC 0...35 V adjustable, 25 Nm, 150 s, 2 auxiliary switches	N4626	658
GBB166.1E	Rotary air damper actuator 25 Nm, without spring return	A6V14252663	659
GBB166.1E	Rotary air damper actuator, AC 24 V, DC 0...10 V, 25 Nm, 150 s, 2 auxiliary switches	N4626	658
GBB331.1E	Rotary air damper actuator, AC 230 V, 3-position, 25 Nm, 150 s	N4626	658
GBB335.1E	Rotary air damper actuator, AC 230 V, 3-position, 25 Nm, 150 s, 2 auxiliary switches, potentiometer	N4626	658
GBB336.1E	Rotary air damper actuator, AC 230 V, 3-position, 25 Nm, 150 s, 2 auxiliary switches	N4626	658
GCA121.1E	Rotary air damper actuator, AC/DC 24 V, 2-position, 18 Nm, spring return 90/15 s	N4613	646

New Product

Product no.	Product Title	Data sheet	Page
GCA121.1E/FW3	Rotary air damper actuators 18 Nm, with spring return	N4613	646
GCA126.1E	Rotary air damper actuator, AC/DC 24 V, 2-position, 18 Nm, spring return 90/15 s, 2 auxiliary switches	N4613	646
GCA131.1E	Rotary air damper actuator, AC/DC 24 V, 3-position, 18 Nm, spring return 90/15 s	N4613	646
GCA135.1E	Rotary air damper actuator, AC/DC 24 V, 3-position, 18 Nm, spring return 90/15 s, 2 auxiliary switches, potentiometer	N4613	646
GCA161.1E	Rotary air damper actuator, AC/DC 24 V, DC 0...10 V, 18 Nm, spring return 90/15 s	N4613	646
GCA161.1E/FW3	Rotary air damper actuators 18 Nm, with spring return	N4613	646
GCA161.1E/MO	Rotary air damper actuator, AC/DC 24 V, Modbus RTU, 18 Nm, spring return 90/15 s	A6V101037201	646
GCA161.1H	Rotary air damper actuators 18 Nm, with spring return	N4613 / A6V101037201	646
GCA163.1E	Rotary air damper actuator, AC/DC 24 V, DC 0...35 V adjustable, 18 Nm, spring return 90/15 s	N4613	646
GCA164.1E	Rotary air damper actuator, AC/DC 24 V, DC 0...35 V adjustable, 18 Nm, spring return 90/15 s, 2 auxiliary switches	N4613	646
GCA166.1E	Rotary air damper actuator, AC/DC 24 V, DC 0...10 V, 18 Nm, spring return 90/15 s, 2 auxiliary switches	N4613	646
GCA321.1E	Rotary air damper actuator, AC 230 V, 2-position, 18 Nm, spring return 90/15 s	N4613	646
GCA326.1E	Rotary air damper actuator, AC 230 V, 2-position, 18 Nm, spring return 90/15 s, 2 auxiliary switches	N4613	646
GCA326.1H	Rotary air damper actuators 18 Nm, with spring return	N4613 / A6V101037201	646
GDA141.1E/RW	Air damper actuators for railway vehicles, DC 24 V, 2-position/3-position, 5 Nm, 90 s	A6V10636280	663
GDA142.1E/RW	Air damper actuators for railway vehicles, DC 24 V, 2-position/3-position, 5 Nm, 90 s	A6V10636280	663
GDA146.1E/RW	Air damper actuators for railway vehicles, DC 24 V, 2-position/3-position, 5 Nm, 90 s, 2 Auxiliary switches	A6V10636280	663
GDA161.1E/RW	Air damper actuators for railway vehicles, DC 24 V, DC0/2...10V, 5 Nm, 90 s	A6V10636293	663
GDB111.1E/KN	Rotary air damper actuators 5 Nm, without spring return	A6V11566316	650
GDB111.1E/MO	Rotary air damper actuator, AC 24 V, 5 Nm with Modbus RTU communication	A6V10881141	650
GDB111.9E/KN	Electromotoric rotary actuator KNX for control ball valves up to DN25	A6V10725318	199
GDB111.9E/MO		A6V10881143	578
GDB131.2E	Linear air damper actuator, AC 24 V, 3-position, 125 N, 150 s	N4664	669
GDB141.1E	Rotary air damper actuator, AC/DC 24 V, 2-position/3-position, 5 Nm, 150 s	A6V10636149_en AP	650
GDB141.1E	Rotary air damper actuator, AC/DC 24 V, 2-position/3-position, 5 Nm, 150 s	A6V10636149	650
GDB141.1E/09H	Rotary air damper actuator, AC/DC 24 V, 2-position/3-position, 5 Nm, 150 s	A6V10636149	652
GDB141.1G	Rotary air damper actuator, AC/DC 24 V, 2-position/3-position, 5 Nm, 150 s	A6V10636149	650
GDB141.9E	Electromotoric rotary actuator for ball valves, non-spring return, AC/DC 24 V, 2-position/3-position, 5 Nm, 150 s	A6V10636150	577
GDB141.9E	Electromotoric rotary actuator for ball valves, non-spring return, AC/DC 24 V, 2-position/3-position, 5 Nm, 150 s	A6V10636150_en AP	577
GDB142.1E	Rotary air damper actuator, AC/DC 24 V, 2-position/3-position, 5 Nm, 150 s, potentiometer	A6V10636149_en AP	650
GDB142.1E	Rotary air damper actuator, AC/DC 24 V, 2-position/3-position, 5 Nm, 150 s, potentiometer	A6V10636149	650
GDB146.1E	Rotary air damper actuator, AC/ DC 24 V, 2-position/3-position, 5 Nm, 150 s, 2 auxiliary switches	A6V10636149	650
GDB146.1E	Rotary air damper actuator, AC/ DC 24 V, 2-position/3-position, 5 Nm, 150 s, 2 auxiliary switches	A6V10636149_en AP	650
GDB161.1E	Rotary air damper actuator, AC/DC 24 V, DC 0/2...10 V, 5 Nm, 150 s	A6V10636149_en AP	650
GDB161.1E	Rotary air damper actuator, AC/DC 24 V, DC 0/2...10 V, 5 Nm, 150 s	A6V10636149	650
GDB161.1E/09H	Rotary air damper actuator, AC/DC 24 V, DC 0/2...10 V, 5 Nm, 150 s	A6V10636149	652
GDB161.1E/FX	Rotary air damper actuators 5 Nm, without spring return	A6V10636149	650
GDB161.1E/MO	Rotary air damper actuator, AC/DC 24 V, 5 Nm with Modbus RTU comminucation	-	650
GDB161.2E	Linear air damper actuator, AC 24 V, DC 0...10 V, 125 N, 150 s	N4664	669

Product no.	Product Title	Data sheet	Page
GDB161.9E	Electromotoric rotary actuator for ball valves, non-spring return, AC/DC 24 V, DC 0/2...10 V, 5 Nm, 150 s	A6V10636150_en AP	577
GDB161.9E	Electromotoric rotary actuator for ball valves, non-spring return, AC/DC 24 V, DC 0/2...10 V, 5 Nm, 150 s	A6V10636150	577
GDB161.9E/6P	Electromotoric rotary actuator for 6-port PICV	A6V12986395	577
GDB161.9E/6W	Electromotoric rotary actuator for 6-port	A6V12986395	577
GDB161.9E/MO	Electromotoric rotary actuators 5 Nm without spring return for ball valves	A6V10636150	577
GDB161.9E/MO6P	Electromotoric rotary actuator for 6-port PICV	A6V12986395	577
GDB161.9G/6P	Electromotoric rotary actuator for 6-port PICV	A6V12986395	577
GDB161.9G/6W	Electromotoric rotary actuator for 6-port	A6V12986395	577
GDB161.9H/6P	Electromotoric rotary actuator for 6-port PICV	A6V12986395	577
GDB161.9H/6W	Electromotoric rotary actuator for 6-port	A6V12986395	577
GDB163.1E	Rotary air damper actuator, AC/DC 24 V, DC 0...35 V adjustable, 5 Nm, 150 s	A6V10636149	650
GDB163.1E	Rotary air damper actuator, AC/DC 24 V, DC 0...35 V adjustable, 5 Nm, 150 s	A6V10636149_en AP	650
GDB163.2E	Linear air damper actuator, AC 24 V, DC 0...35 V adjustable, 125 N, 150 s	N4664	669
GDB164.1E	Rotary air damper actuator, AC/DC 24 V, DC 0...35 V adjustable, 5 Nm, 150 s, 2 auxiliary switches	A6V10636149_en AP	650
GDB164.1E	Rotary air damper actuator, AC/DC 24 V, DC 0...35 V adjustable, 5 Nm, 150 s, 2 auxiliary switches	A6V10636149	650
GDB166.1E	Rotary air damper actuator, AC/DC 24 V, DC 0/2...10 V, 5 Nm, 150 s, 2 auxiliary switches	A6V10636149_en AP	650
GDB166.1E	Rotary air damper actuator, AC/DC 24 V, DC 0/2...10 V, 5 Nm, 150 s, 2 auxiliary switches	A6V10636149	650
GDB181.1E/3	VAV compact controller, AC 24 V, DC 0...10 V, 5 Nm, 150 s, 300 Pa	N3544	682
GDB181.1E/KN	VAV compact controller KNX, AC 24 V, 5 Nm, 150 s, 300 Pa	N3547	198
GDB181.1E/MO	VAV compact controller Modbus, AC 24 V, 5 Nm, 150 s, 300 Pa	A6V10631832	681
GDB181.1EMKN	VAV compact controller KNX, multipack 18 pcs. incl. ASK78.12	N3547	198
GDB181.1EMMO	VAV compact controller Modbus, multipack 18 pcs. incl. ASK78.12	A6V10631832	681
GDB181.1G/3	VAV compact controller, AC 24 V, DC 0...10 V, 5 Nm, 150 s, 300 Pa	N3544	682
GDB181.1GMKW1	VAV compact controller KNX, AC 24 V, 5 Nm, 150 s, 300 Pa	N3547	198
GDB331.2E	Linear air damper actuator, AC 230 V, 3-position, 125 N, 150 s	N4664	669
GDB336.2E	Linear air damper actuator, AC 230 V, 3-position, 125 N, 150 s, 2 auxiliary switches	N4664	669
GDB341.1E	Rotary air damper actuator, AC 230 V, 2-position/3-position, 5 Nm, 150 s	A6V10636149	650
GDB341.1E	Rotary air damper actuator, AC 230 V, 2-position/3-position, 5 Nm, 150 s	A6V10636149_en AP	650
GDB341.1E/09H	Rotary air damper actuator, AC 230 V, 2-position/3-position, 5 Nm, 150 s	A6V10636149	652
GDB341.9E	Electromotoric rotary actuator for ball valves, non-spring return, AC 230 V, 2-position/3-position, 5 Nm, 150 s	A6V10636150	577
GDB341.9E	Electromotoric rotary actuator for ball valves, non-spring return, AC 230 V, 2-position/3-position, 5 Nm, 150 s	A6V10636150_en AP	577
GDB346.1E	Rotary air damper actuator, AC 230 V, 2-position/3-position, 5 Nm, 150 s, 2 auxiliary switches	A6V10636149_en AP	650
GDB346.1E	Rotary air damper actuator, AC 230 V, 2-position/3-position, 5 Nm, 150 s, 2 auxiliary switches	A6V10636149	650
GDB361.1E	Rotary air damper actuator, AC 230 V, DC 0/2...10 V, 5 Nm, 150 s	A6V10636149_en AP	650
GDB361.1E	Rotary air damper actuator, AC 230 V, DC 0/2...10 V, 5 Nm, 150 s	A6V10636149	650
GDB361.1G	Rotary air damper actuators 5 Nm, without spring return	A6V10636149 / A6V10881141	650
GDD141.1E/RW	Air damper actuators for railway vehicles, DC 24 V, 2-position/3-position, 5 Nm, 30 s	A6V10636280	664
GDD142.1E/RW	Air damper actuators for railway vehicles, DC 24 V, 2-position/3-position, 5 Nm, 30 s, potentiometer	A6V10636280	664
GDD146.1E/RW	Air damper actuators for railway vehicles, DC 24 V, 2-position/3-position, 5 Nm, 30 s, 2 Auxiliary switches	A6V10636280	664
GDD161.1E/RW	Air damper actuators for railway vehicles, DC 24 V, DC0/2...10V, 5 Nm, 30 s	A6V10636293	664

New Product

Product no.	Product Title	Data sheet	Page
GDD161.9E	Rotary actuators for ball valves, AC/DC 24 V, DC 0/2...10 V, 5 Nm, 30 s	A6V12725064	578
GDD241.1E/RW	Air damper actuators for railway vehicles 5 Nm, without spring return	A6V12632194	664
GDD242.1E/RW	Air damper actuators for railway vehicles 5 Nm, without spring return	A6V12632194	664
GDD246.1E/RW	Air damper actuators for railway vehicles 5 Nm, without spring return	A6V12632194	664
GDD261.1E/RW	Air damper actuators for railway vehicles 5 Nm, without spring return	A6V12632198	664
GEB141.1E	Rotary air damper actuators 20 Nm, without spring return	A6V11449860	656
GEB142.1E	Rotary air damper actuators 20 Nm, without spring return, Potentiometer	A6V11449860	656
GEB146.1E	Rotary air damper actuators 20 Nm, without spring return	A6V11449860	656
GEB161.1E	Rotary air damper actuators 20 Nm, without spring return	A6V11449860	656
GEB163.1E	Rotary air damper actuators 20 Nm, without spring return	A6V11449860	656
GEB164.1E	Rotary air damper actuators 20 Nm, without spring return	A6V11449860	656
GEB166.1E	Rotary air damper actuators 20 Nm, without spring return	A6V11449860	656
GEB341.1E	Rotary air damper actuators 20 Nm, without spring return	A6V11449860	656
GEB346.1E	Rotary air damper actuators 20 Nm, without spring return	A6V11449860	656
GEB361.1E	Rotary air damper actuators 20 Nm, without spring return	A6V11449860	656
GGA126.1E/10	Actuator for fire protection dampers, AC/DC 24 V, 2-position, 18 Nm, spring return 90/15 s, 2 auxiliary switches, shaft 10 x 10 mm	N4617	688
GGA126.1E/12	Actuator for fire protection dampers, AC/DC 24 V, 2-position, 18 Nm, spring return 90/15 s, 2 auxiliary switches, shaft 12 x 12 mm	N4617	688
GGA126.1E/C10	Actuators for fire protection dampers	N4617	688
GGA126.1E/C12	Actuators for fire protection dampers	N4617	688
GGA126.1E/T10	Actuator for fire protection dampers, AC/DC 24 V, 2-position, 18 Nm, spring return 90/15 s, 2 auxiliary switches, shaft 10 x 10 mm, with thermosensor	N4617	688
GGA126.1E/T12	Actuator for fire protection dampers, AC/DC 24 V, 2-position, 18 Nm, spring return 90/15 s, 2 auxiliary switches, shaft 12 x 12 mm, with thermosensor	N4617	688
GGA326.1E/10	Actuator for fire protection dampers, AC 230 V, 2-position, 18 Nm, spring return 90/15 s, 2 auxiliary switches, shaft 10 x 10 mm	N4617	688
GGA326.1E/12	Actuator for fire protection dampers, AC 230 V, 2-position, 18 Nm, spring return 90/15 s, 2 auxiliary switches, shaft 12 x 12 mm	N4617	688
GGA326.1E/T10	Actuator for fire protection dampers, AC 230 V, 2-position, 18 Nm, spring return 90/15 s, 2 auxiliary switches, shaft 10 x 10 mm, with thermosensor	N4617	688
GGA326.1E/T12	Actuator for fire protection dampers, AC 230 V, 2-position, 18 Nm, spring return 90/15 s, 2 auxiliary switches, shaft 12 x 12 mm, with thermosensor	N4617	688
GIB131.1E	Rotary air damper actuator, AC 24 V, 3-position, 35 Nm, 150 s	N4626	581
GIB135.1E	Rotary air damper actuator, AC 24 V, 3-position, 35 Nm, 150 s, 2 auxiliary switches, potentiometer	N4626	581
GIB136.1E	Rotary air damper actuator, AC 24 V, 3-position, 35 Nm, 150 s, 2 auxiliary switches	N4626	581
GIB141.1E	Rotary air damper actuator 35 Nm, without spring return	A6V14255636	661
GIB141.1E/CR	Rotary air damper actuators 35 Nm, without spring return	A6V14255636	661
GIB145.1E	Rotary air damper actuator 35 Nm, without spring return	A6V14255636	661
GIB146.1E	Rotary air damper actuator 35 Nm, without spring return	A6V14255636	661
GIB161.1E	Rotary air damper actuator 35 Nm, without spring return	A6V14255636	661
GIB161.1E	Rotary air damper actuator, AC 24 V, DC 0...10 V, 35 Nm, 150 s	N4626	581
GIB161.1E/MO	Rotary air damper actuator, AC 24 V, Modbus RTU, 35 Nm, 150 s without spring return	A6V101037253	581
GIB163.1E	Rotary air damper actuator, AC 24 V, DC 0...35 V adjustable, 35 Nm, 150 s	N4626	581
GIB163.1E	Rotary air damper actuator 35 Nm, without spring return	A6V14255636	661
GIB164.1E	Rotary air damper actuator 35 Nm, without spring return	A6V14255636	661
GIB164.1E	Rotary air damper actuator, AC 24 V, DC 0...35 V adjustable, 35 Nm, 150 s, 2 auxiliary switches	N4626	581
GIB166.1E	Rotary air damper actuator 35 Nm, without spring return	A6V14255636	661
GIB166.1E	Rotary air damper actuator, AC 24 V, DC 0...10 V, 35 Nm, 150 s, 2 auxiliary switches	N4626	581
GIB331.1E	Rotary air damper actuator, AC 230 V, 3-position, 35 Nm, 150 s	N4626	581
GIB335.1E	Rotary air damper actuator, AC 230 V, 3-position, 35 Nm, 150 s, 2 auxiliary switches, potentiometer	N4626	581
GIB336.1E	Rotary air damper actuator, AC 230 V, 3-position, 35 Nm, 150 s, 2 auxiliary switches	N4626	581

Product no.	Product Title	Data sheet	Page
GLA141.1E/RW	Air damper actuators for railway vehicles, DC 24 V, 2-position/3-position, 10 Nm, 90 s	A6V10636286	666
GLA142.1E/RW	Air damper actuators for railway vehicles, DC 24 V, 2-position/3-position, 10 Nm, 90 s	A6V10636286	666
GLA146.1E/RW	Air damper actuators for railway vehicles, DC 24 V, 2-position/3-position, 10 Nm, 90 s, 2 Auxiliary switches	A6V10636286	666
GLA161.1E/RW	Air damper actuators for railway vehicles, DC 24 V, DC0/2...10V, 10 Nm, 90 s	A6V10636299	666
GLB111.1E/KN	Rotary air damper actuators 10 Nm, without spring return	A6V11566316	653
GLB111.1E/MO	Rotary air damper actuator, AC 24 V, 10 Nm, 150 s with Modbus RTU communication	A6V10881141	653
GLB111.9E/KN	Electromotoric rotary actuator KNX for control ball valves up to DN50	A6V10725318	580
GLB111.9E/MO	Electromotoric rotary actuator, AC 24 V, 10 Nm, 150 s with Modbus RTU	A6V10881143	580
GLB131.2E	Linear air damper actuator, AC 24 V, 3-position, 250 N, 150 s	N4664	670
GLB136.2E	Linear air damper actuator, AC 24 V, 3-position, 250 N, 150 s, 2 auxiliary switches	N4664	670
GLB141.1E	Rotary air damper actuator, AC/DC 24 V, 2-position/3-position, 10 Nm, 150 s	A6V10636202	653
GLB141.1E	Rotary air damper actuator, AC/DC 24 V, 2-position/3-position, 10 Nm, 150 s	A6V10636202_en AP	653
GLB141.1E/09H	Rotary air damper actuator, AC/DC 24 V, 2-position/3-position, 10 Nm, 150 s	A6V10636202	655
GLB141.1H	Rotary air damper actuator, AC/DC 24 V, 2-position/3-position, 10 Nm, 150 s	A6V10636202	653
GLB141.9E	Electromotoric rotary actuator for ball valves, non-spring return, AC/DC 24 V, 2-position/3-position, 10 Nm, 150 s	A6V10636203	580
GLB141.9E	Electromotoric rotary actuator for ball valves, non-spring return, AC/DC 24 V, 2-position/3-position, 10 Nm, 150 s	A6V10636203_en AP	580
GLB142.1E	Rotary air damper actuator, AC/DC 24 V, 2-position/3-position, 10 Nm, 150 s, potentiometer	A6V10636202_en AP	653
GLB142.1E	Rotary air damper actuator, AC/DC 24 V, 2-position/3-position, 10 Nm, 150 s, potentiometer	A6V10636202	653
GLB146.1E	Rotary air damper actuator, AC/DC 24 V, 2-position/3-position, 10 Nm, 150 s, 2 auxiliary switches	A6V10636202	653
GLB146.1E	Rotary air damper actuator, AC/DC 24 V, 2-position/3-position, 10 Nm, 150 s, 2 auxiliary switches	A6V10636202_en AP	653
GLB161.1E	Rotary air damper actuator, AC/DC 24 V, DC 0/2...10 V, 10 Nm, 150 s	A6V10636202_en AP	653
GLB161.1E	Rotary air damper actuator, AC/DC 24 V, DC 0/2...10 V, 10 Nm, 150 s	A6V10636202	653
GLB161.1E/09H	Rotary air damper actuator, AC/DC 24 V, DC 0/2...10 V, 10 Nm, 150 s	A6V10636202	655
GLB161.1H	Rotary air damper actuator, AC/DC 24 V, DC 0/2...10 V, 10 Nm, 150 s	A6V10636202	653
GLB161.2E	Linear air damper actuator, AC 24 V, DC 0...10 V, 250 N, 150 s	N4664	670
GLB161.9E	Electromotoric rotary actuator for ball valves, non-spring return, AC/DC 24 V, DC 0/2...10 V, 10 Nm, 150 s	A6V10636203_en AP	580
GLB161.9E	Electromotoric rotary actuator for ball valves, non-spring return, AC/DC 24 V, DC 0/2...10 V, 10 Nm, 150 s	A6V10636203	580
GLB161.9E/FX	Electromotoric rotary actuator for ball valves, non-spring return, AC/DC 24 V, DC 0/2...10 V, 10 Nm, 150 s	A6V10636203	580
GLB161.9E/MO	Electromotoric rotary actuators 10 Nm without spring return for ball valves	A6V10636203	580
GLB163.1E	Rotary air damper actuator, AC/DC 24 V, DC 0...35 V adjustable, 10 Nm, 150 s	A6V10636202	653
GLB163.1E	Rotary air damper actuator, AC/DC 24 V, DC 0...35 V adjustable, 10 Nm, 150 s	A6V10636202_en AP	653
GLB163.2E	Linear air damper actuator, AC 24 V, DC 0...35 V adjustable, 250 N, 150 s	N4664	670
GLB164.1E	Rotary air damper actuator, AC/DC 24 V, DC 0...35 V adjustable, 10 Nm, 150 s, 2 auxiliary switches	A6V10636202_en AP	653
GLB164.1E	Rotary air damper actuator, AC/DC 24 V, DC 0...35 V adjustable, 10 Nm, 150 s, 2 auxiliary switches	A6V10636202	653
GLB166.1E	Rotary air damper actuator, AC/DC 24 V, DC 0/2...10 V, 10 Nm, 150 s, 2 auxiliary switches	A6V10636202	653
GLB166.1E	Rotary air damper actuator, AC/DC 24 V, DC 0/2...10 V, 10 Nm, 150 s, 2 auxiliary switches	A6V10636202_en AP	653
GLB181.1E/3	VAV compact controller, AC 24 V, DC 0...10 V, 10 Nm, 150 s, 300 Pa	N3544	682
GLB181.1E/BA	VAV compact controller BACnet, AC 24 V, 10 Nm, 150 s, 300 Pa	A6V10631834	680
GLB181.1E/KN	VAV compact controller KNX, AC 24 V, 10 Nm, 150 s, 300 Pa	N3547	198

New Product

Product no.	Product Title	Data sheet	Page
GLB181.1E/MO	VAV compact controller Modbus, AC 24 V, 10 Nm, 150 s, 300 Pa	A6V10631832	681
GLB181.1EM3	VAV compact controller, AC 24 V, 10 Nm, 150 s, Multipack	N3544	682
GLB181.1EMKN	VAV compact controller, AC 24 V, 10 Nm, Multipack with KNX	N3547	198
GLB331.2E	Linear air damper actuator, AC 230 V, 3-position, 250 N, 150 s	N4664	670
GLB336.2E	Linear air damper actuator, AC 230 V, 3-position, 250 N, 150 s, 2 auxiliary switches	N4664	670
GLB341.1E	Rotary air damper actuator, AC 230 V, 2-position/3-position, 10 Nm, 150 s	A6V10636202_en AP	653
GLB341.1E	Rotary air damper actuator, AC 230 V, 2-position/3-position, 10 Nm, 150 s	A6V10636202	653
GLB341.1E/09H	Rotary air damper actuator, AC 230 V, 2-position/3-position, 10 Nm, 150 s	A6V10636202	655
GLB341.9E	Electromotoric rotary actuator for ball valves, non-spring return, AC 230 V, 2-position/3-position, 10 Nm, 150 s	A6V10636203	580
GLB341.9E	Electromotoric rotary actuator for ball valves, non-spring return, AC 230 V, 2-position/3-position, 10 Nm, 150 s	A6V10636203_en AP	580
GLB346.1E	Rotary air damper actuator, AC 230 V, 2-position/3-position, 10 Nm, 150 s, 2 auxiliary switches	A6V10636202_en AP	653
GLB346.1E	Rotary air damper actuator, AC 230 V, 2-position/3-position, 10 Nm, 150 s, 2 auxiliary switches	A6V10636202	653
GLB361.1E	Rotary air damper actuator, AC 230 V, DC 0/2...10 V, 10 Nm, 150 s	A6V10636202_en AP	653
GLB361.1E	Rotary air damper actuator, AC 230 V, DC 0/2...10 V, 10 Nm, 150 s	A6V10636202	653
GLD141.1E/RW	Air damper actuators for railway vehicles, DC 24 V, 2-position/3-position, 8 Nm, 30 s	A6V10636286	665
GLD142.1E/RW	Air damper actuators for railway vehicles, DC 24 V, 2-position/3-position, 8 Nm, 30 s, potentiometer	A6V10636286	665
GLD146.1E/RW	Air damper actuators for railway vehicles, DC 24 V, 2-position/3-position, 8 Nm, 30 s, 2 Auxiliary switches	A6V10636286	665
GLD161.1E/RW	Air damper actuators for railway vehicles, DC 24 V, DC0/2...10V, 8 Nm, 30 s	A6V10636299	665
GLD161.9E	Rotary actuators for ball valves, AC/DC 24 V, DC 0/2...10 V, 8 Nm, 30 s	A6V11171770	579
GLD161.9E/MO	Rotary actuators for ball valves	A6V11171770	579
GLD241.1E/RW	Air damper actuators for railway vehicles 8 Nm, without spring return	A6V12632202	665
GLD242.1E/RW	Air damper actuators for railway vehicles 8 Nm, without spring return	A6V12632202	665
GLD246.1E/RW	Air damper actuators for railway vehicles 8 Nm, without spring return	A6V12632202	665
GLD261.1E/RW	Air damper actuators for railway vehicles 8 Nm, without spring return	A6V12632206	665
GMA121.1E	Rotary air damper actuator, AC/DC 24 V, 2-position, 7 Nm, spring return 90/15 s	N4614	644
GMA121.1E/FW3	Rotary air damper actuators 7 Nm, with spring return	N4614	644
GMA121.9E	Electromotoric rotary actuator with spring-return for ball valves, AC/DC 24 V, 2-position, 7 Nm, 90/15 s	N4658	579
GMA121.9H	Electromotoric rotary actuator with spring-return for ball valves, AC/DC 24 V, 2-position, 7 Nm, 90/15 s	N4658	579
GMA126.1E	Rotary air damper actuator, AC/DC 24 V, 2-position, 7 Nm, spring return 90/15 s, 2 auxiliary switches	N4614	644
GMA131.1E	Rotary air damper actuator, AC/DC 24 V, 3-position, 7 Nm, spring return 90/15 s	N4614	644
GMA131.9E	Electromotoric rotary actuator with spring-return for ball valves, AC/DC 24 V, 3-position, 7 Nm, 90/15 s	N4658	579
GMA136.1E	Rotary air damper actuator, AC/DC 24 V, 3-position, 7 Nm, spring return 90/15 s, 2 auxiliary switches	N4614	644
GMA161.1E	Rotary air damper actuator, AC/DC 24 V, DC 0...10 V, 7 Nm, spring return 90/15 s	N4614	644
GMA161.1E/FW1	Rotary air damper actuators 7 Nm, with spring return	N4614	644
GMA161.1E/FW3	Rotary air damper actuators 7 Nm, with spring return	N4614	644
GMA161.1E/MO	Rotary air damper actuator, AC/DC 24 V, Modbus RTU, 7 Nm, spring return 90/15 s	A6V101037201	644
GMA161.9E	Electromotoric rotary actuator with spring-return for ball valves, AC/DC 24 V, DC 0...10 V, 7 Nm, 90/15 s	N4658	579
GMA161.9E/MO	Rotary actuators 7 Nm with spring return for ball valves	N4658	579
GMA161.9H	Electromotoric rotary actuator with spring-return for ball valves, AC/DC 24 V, DC 0...10 V, 7 Nm, 90/15 s	N4658	579
GMA163.1E	Rotary air damper actuator, AC/DC 24 V, DC 0...35 V adjustable, 7 Nm, spring return 90/15 s	N4614	644

New Product

Product no.	Product Title	Data sheet	Page
GMA164.1E	Rotary air damper actuator, AC/DC 24 V, DC 0...35 V adjustable, 7 Nm, spring return 90/15 s, 2 auxiliary switches	N4614	644
GMA166.1E	Rotary air damper actuator, AC/DC 24 V, DC 0...10 V, 7 Nm, spring return 90/15 s, 2 auxiliary switches	N4614	644
GMA321.1E	Rotary air damper actuator, AC 230 V, 2-position, 7 Nm, spring return 90/15 s	N4614	644
GMA321.9E	Electromotoric rotary actuator with spring-return for ball valves, AC 230 V, 2-position, 7 Nm, 90/15 s	N4658	579
GMA326.1E	Rotary air damper actuator, AC 230 V, 2-position, 7 Nm, spring return 90/15 s, 2 auxiliary switches	N4614	644
GMA326.1E/09H	Rotary air damper actuators 7 Nm, with spring return	N4614 / A6V101037201	644
GNA126.1E/10	Actuator for fire protection dampers, AC/DC 24 V, 2-position, 9 Nm, spring return 90/15 s, 2 auxiliary switches, shaft 10 x 10 mm	N4620	686
GNA126.1E/12	Actuator for fire protection dampers, AC/DC 24 V, 2-position, 9 Nm, spring return 90/15 s, 2 auxiliary switches, shaft 12 x 12 mm	N4620	686
GNA126.1E/12A	Actuator for fire protection dampers, AC/DC 24 V, 2-position, 9 Nm, spring return 90/15 s, 2 auxiliary switches, shaft 12 x 12 mm	N4620	686
GNA126.1E/C10	Actuators for fire protection dampers, AC/DC 24 V, 2-position, 9 Nm, spring return 90/15 s, 2 auxiliary switches, shaft 10 x 10 mm, with thermosensor	N4620	686
GNA126.1E/C12	Actuators for fire protection dampers	N4620	686
GNA126.1E/H12	Actuators for fire protection dampers	N4620	686
GNA126.1E/T10	Actuator for fire protection dampers, AC/DC 24 V, 2-position, 9 Nm, spring return 90/15 s, 2 auxiliary switches, shaft 10 x 10 mm, with thermosensor	N4620	686
GNA126.1E/T12	Actuator for fire protection dampers, AC/DC 24 V, 2-position, 9 Nm, spring return 90/15 s, 2 auxiliary switches, shaft 12 x 12 mm, with thermosensor	N4620	686
GNA166.1E/T12	Actuators for fire protection dampers	A6V11465149	686
GNA326.1E/10	Actuator for fire protection dampers, AC 230 V, 2-position, 9 Nm, spring return 90/15 s, 2 auxiliary switches, shaft 10x10 mm	N4620	686
GNA326.1E/12	Actuator for fire protection dampers, AC 230 V, 2-position, 9 Nm, spring return 90/15 s, 2 auxiliary switches, shaft 12x12 mm	N4620	686
GNA326.1E/12A	Actuator for fire protection dampers, AC 230 V, 2-position, 9 Nm, spring return 90/15 s, 2 auxiliary switches, shaft 12x12 mm, with thermosensor	N4620	686
GNA326.1E/T10	Actuator for fire protection dampers, AC 230 V, 2-position, 9 Nm, spring return 90/15 s, 2 auxiliary switches, shaft 10x10 mm, with thermosensor	N4620	686
GNA326.1E/T12	Actuator for fire protection dampers, AC 230 V, 2-position, 9 Nm, spring return 90/15 s, 2 auxiliary switches, shaft 12x12 mm, with thermosensor	N4620	686
GNP191.1E	Rotary air damper actuator, AC/DC 24 V, DC 0(2)...10 V / 0(4)...20 mA, 6 Nm, 2 s, with electronic fail-save function	N4609	667
GNP196.1E	Rotary air damper actuator, AC/DC 24 V, DC 0(2)...10 V / 0(4)...20 mA, 6 Nm, 2 s, with electronic fail-save function, 2 auxiliary switches	N4609	667
GPC121.1A	Rotary air damper actuator, AC/DC 24 V, 2-position, 4 Nm, spring return 60/15 s	c	643
GPC121.1A/RW	Air damper actuators for railway vehicles, 4 Nm, with spring return	A6V12575992	648
GPC126.1A	Rotary air damper actuator, AC/DC 24 V, 2-position, 4 Nm, spring return 60/15 s, 2 auxiliary switches	A6V10636100	643
GPC126.1A/RW	Air damper actuators for railway vehicles, 4 Nm, with spring return	A6V12575992	648
GPC131.1A	Rotary air damper actuator, AC/DC 24 V, 3-position, 4 Nm, spring return 60/15 s	A6V10636100	643
GPC136.1A	Rotary air damper actuator, AC/DC 24 V, 3-position, 4 Nm, spring return 60/15 s, 2 auxiliary switches	A6V10636100	643
GPC161.1A	Rotary air damper actuator, AC/DC 24 V, DC 0...10 V, 4 Nm, spring return 60/15 s	A6V10636100	643
GPC161.1A/RW	Air damper actuators for railway vehicles, 4 Nm, with spring return	A6V12575992	648
GPC166.1A	Rotary air damper actuator, AC/DC 24 V, DC 0...10 V, 4 Nm, spring return 60/15 s, 2 auxiliary switches	A6V10636100	643
GPC221.1A/RW	Air damper actuators for railway vehicles, 4 Nm, with spring return	A6V12575999	648
GPC226.1A/RW	Air damper actuators for railway vehicles, 4 Nm, with spring return	A6V12575999	648
GPC261.1A/RW	Air damper actuators for railway vehicles, 4 Nm, with spring return	A6V12575999	648
GPC321.1A	Rotary air damper actuator, AC 230 V, 2-position, 4 Nm, spring return 60/15 s	A6V10636100	643

Product no.	Product Title	Data sheet	Page
GPC326.1A	Rotary air damper actuator, AC 230 V, 2-position, 4 Nm, spring return 60/15 s, 2 auxiliary switches	A6V10636100	643
GPC361.1A	Rotary air damper actuator, AC 230 V, DC 0...10 V, 4 Nm, spring return 60/15 s	A6V10636100	643
GQD121.1A	Rotary air damper actuator, AC/DC 24 V, 2-position, 2 Nm, spring return 30/15 s	N4604	642
GQD121.9A	Electromotoric rotary actuator with spring-return for ball valves, AC/DC 24 V, 2-position, 2 Nm, 30/15 s	N4659	575
GQD126.1A	Rotary air damper actuator, AC/DC 24 V, 2-position, 2 Nm, spring return 30/15 s, 2 auxiliary switches	N4604	642
GQD131.1A	Rotary air damper actuator, AC/DC 24 V, 3-position, 2 Nm, spring return 30/15 s	N4604	642
GQD131.9A	Electromotoric rotary actuator with spring-return for ball valves, AC/DC 24 V, 3-position, 2 Nm, 30/15 s	N4659	575
GQD136.1A	Rotary air damper actuator, AC/DC 24 V, 3-position, 2 Nm, spring return, 30/15 s, 2 auxiliary switches	N4604	642
GQD161.1A	Rotary air damper actuator, AC/DC 24 V, DC 0...10 V, 2 Nm, spring return 30/15 s	N4604	642
GQD161.9A	Electromotoric rotary actuator with spring-return for ball valves, AC/DC 24 V, DC 0...10 V, 2 Nm, 30/15 s	N4659	575
GQD166.1A	Rotary air damper actuator, AC/DC 24 V, DC 0...10 V, 2 Nm, spring return 30/15 s, 2 auxiliary switches	N4604	642
GQD321.1A	Rotary air damper actuator, AC 230 V, 2-position, 2 Nm, spring return 30/15 s	N4604	642
GQD321.9A	Electromotoric rotary actuator with spring-return for ball valves, AC 230 V, 2-position, 2 Nm, 30/15 s	N4659	575
GQD326.1A	Rotary air damper actuator, AC 230 V, 2-position, 2 Nm, spring return 30/15 s, 2 auxiliary switches	N4604	642
GRA126.1E/10	Actuator for fire protection dampers, AC/DC 24 V, 2-position, 4 Nm, spring return 90/15 s, 2 auxiliary switches, shaft 10 x 10 mm	A6V10888424	684
GRA126.1E/12	Actuator for fire protection dampers, AC/DC 24 V, 2-position, 4 Nm, spring return 90/15 s, 2 auxiliary switches, shaft 12 x 12 mm	A6V10888424	684
GRA126.1E/12A	Actuator for fire protection dampers, AC/DC 24 V, 2-position, 4 Nm, spring return 90/15 s, 2 auxiliary switches, shaft 12 x 12 mm	A6V10888424	684
GRA126.1E/C12	Actuators for fire protection dampers	A6V10888424	684
GRA126.1E/T10	Actuator for fire protection dampers, AC/DC 24 V, 2-position, 4 Nm, spring return 90/15 s, 2 auxiliary switches, shaft 10 x 10 mm, with thermosensor	A6V10888424	684
GRA126.1E/T12	Actuator for fire protection dampers, AC/DC 24 V, 2-position, 4 Nm, spring return 90/15 s, 2 auxiliary switches, shaft 12 x 12 mm, with thermosensor	A6V10888424	684
GRA326.1E/10	Actuator for fire protection dampers, AC 230 V, 2-position, 4 Nm, spring return 90/15 s, 2 auxiliary switches, shaft 10 x 10 mm	A6V10888424	684
GRA326.1E/12	Actuator for fire protection dampers, AC 230 V, 2-position, 4 Nm, spring return 90/15 s, 2 auxiliary switches, shaft 12 x 12 mm	A6V10888424	684
GRA326.1E/12A	Actuators for fire protection dampers	A6V10888424	684
GRA326.1E/T10	Actuator for fire protection dampers, AC 230 V, 2-position, 4 Nm, spring return 90/15 s, 2 auxiliary switches, shaft 10 x 10 mm, with thermosensor	A6V10888424	684
GRA326.1E/T12	Actuator for fire protection dampers, AC 230 V, 2-position, 4 Nm, spring return 90/15 s, 2 auxiliary switches, shaft 12 x 12 mm, with thermosensor	A6V10888424	684
GSD141.1A	Rotary air damper actuators, AC/DC 24 V, 2 Nm, 30 s	A6V10636055	649
GSD141.9A	Electromotoric rotary actuator without spring return for ball valves, AC/DC 24 V, On-Off, 2 Nm, 30 s	A6V10636056	576
GSD146.1A	Rotary air damper actuators, AC/DC 24 V, 2 Nm, 30 s, 2 auxiliary switches	A6V10636055	649
GSD161.1A	Rotary air damper actuators, AC/DC 24 V, 2 Nm, 30 s	A6V10636055	649
GSD161.9A	Electromotoric rotary actuators without spring return for ball valves, 2 Nm, 30s	A6V10636056	576
GSD166.1A	Rotary air damper actuators, AC/DC 24 V, 2 Nm, 30 s, 2 auxiliary switches	A6V10636055	649
GSD341.1A	Rotary air damper actuators, AC 240 V, 2 Nm, 30 s	A6V10636055	649
GSD341.9A	Electromotoric rotary actuator without spring return for ball valves, AC 230 V, On-Off, 2 Nm, 30 s	A6V10636056	576
GSD346.1A	Rotary air damper actuators, AC 240 V, 2 Nm, 30 s, 2 auxiliary switches	A6V10636055	649
GSD361.1A	Rotary air damper actuators, AC 240 V, 2 Nm, 30 s	A6V10636055	649
GTW100ZB	GTW100ZB Connected Home Hub	A6V12640776	223
HCAIK0100S1	Kit remote sensor 1.5 m		707

Product no.	Product Title	Data sheet	Page
HCAIK0100S2	Kit remote sensor 2.5 m		707
HCAIK0100S5	Kit remote sensor 5 m		707
HCAIP001001	Installation template	N2886	707
HCAPH001001	Programming adapter	N2886	708
HLBAA00315QF	VAV damper short, 315	A6V12987473	181
HLBHA00200QF	VAV damper ultra short, 200	A6V12987473	181
HLBHA00250QF	VAV damper ultra short, 250	A6V12987473	181
HMRIK001-001	Wall bracket	N5323	720
HMXIK001-001	Installation set Rp ½" - ball valve Rp ½" with coupling nut G ¾" and flat gaskets	N5323	720
HMXIK001-002	Installation set Rp ¾"- ball valve Rp ¾" with coupling nut G ¾" and flat gaskets	N5323	720
HMXIK001-003	Installation set Rp 1"- ball valve Rp 1" with coupling nut G ¾" and flat gaskets	N5323	720
HMXIK001-004	Installation set Rp 1"- ball valve Rp 1" with coupling nut G 1" and flat gaskets	N5323	720
HMXIK001-005	Installation set Rp ¾"- ball valve Rp ¾" with coupling nut G 1" and flat gaskets	N5323	720
HMXIK002-001	Installation set R ½" - fitting R ½" with coupling nut G ¾" and flat gaskets	N5323	720
HMXIK002-002	Installation set R ¾" - fitting R ¾" with coupling nut G ¾" and flat gaskets	N5323	720
HMXIK002-003	Installation set R 1" - fitting R 1" with coupling nut G ¾" and flat gaskets	N5323	720
HMXIK002-004	Installation set R 1" - fitting R 1" with coupling nut G 1" and flat gaskets	N5323	720
HMXIK002-005	Installation set R ¾" - fitting R ¾" with coupling nut G 1" and flat gaskets	N5323	720
HMXIK003-001	Adapter set from G ¾" to G 1"	N5323	720
HMXIK003-002	Extension set from G ¾" to G 1"	N5323	720
HMXIK003-003	Extension set from 110 mm G ¾" to 130 mm G ¾"	N5323	720
HMXIK003-004	Extension set from 110 mm G ¾" to 165 mm G ¾"	N5323	720
HMXIK003-005	Extension set from 110 mm G ¾" to 190 mm G 1"	N5323	720
HMXIK004-001	Temperature sensor screwed	N5323	720
IRA211	Infrared Remote Control for room thermostats	N3060	279
JXF:BOZ5005	Sensor accessories set		720
JXF:FKK0139	Sealing ring	A6V12128928	712
JXF:FKK0173	Guide piece for M77 x 1.5 mm capsule water meter	A6V12128928	716
JXF:FKL0012	M-bus cable for WF.54..	A6V10800216	720
JXF:FKL0013	Impulse cable for WF.54..	A6V10800216	720
JXF:FKM0076	Ball valve R ½" with coupling nut G ¾"	N5323	720
JXF:FKM0077	Ball valve R ¾" with coupling nut G ¾"		720
JXF:FKM0078	Ball valve Rp 1" with union nut G ¾"		720
JXF:FKM0079	Ball valve Rp ¾" with union nut G 1"		720
JXF:FKM0080	Ball valve Rp 1" with union nut G 1"		720
JXF:FKS0034	O-ring for M77 x 1.5 mm capsule water meter	A6V12128928	716
JXF:WFK636.E130	Electronic impeller type cold water meter Q3 = 4 m3/h, wall-mounted, mounting length 130 mm, connecting thread 1", M-bus radio communication, 10-year battery, up to 30 °C	A6V12128928	714
JXF:WFK636.E13C	Electronic impeller type cold water meter Q3 = 4 m^3/h, wall-mounted, mounting length 130 mm, connecting thread 1", M-bus radio communication, C-mode, 10-year battery, up to 30 °C	A6V12128928	714
JXF:WFW636.E130	Electronic impeller type hot water meter Q3 = 4 m3/h, wall-mounted, mounting length 130 mm, connecting thread 1", M-bus radio communication, 10-year battery, up to 90 °C	A6V12128928	714
JXF:WFW636.E13C	Electronic impeller type hot water meter Q3 = 4 m^3/h, wall-mounted, mounting length 130 mm, connecting thread 1", M-bus radio communication, C-mode, 10-year battery, up to 90 °C	A6V12128928	714
JXF:WME.EINPUTZ1	Mounting aid		712
JXF:WME.G20/OV/H	Single-pipe connecting piece		712
JXF:WME.L15/OV/H	Single-pipe connecting piece (EAT)		712
JXF:WME.L18/OV/H	Single-pipe connecting piece (EAT)		712
JXF:WME.L22/OV/H	Single-pipe connecting piece (EAT)		712
JXF:WME.PRODICHT	Profiled seal		712
JXF:WME.VRING	EAT cover		712

New Product

Product no.	Product Title	Data sheet	Page
JXF:WMK636.DAL00	Electronic multi-jet cold water meter for A34 measuring capsule Q3 = 2.5 m3 / h, connection thread M77 x 1.5 mm, M-bus radio communication, 10-year battery, up to 30 ° C	A6V12128928	716
JXF:WMK636.DIS00	Electronic multi-jet cold water meter for IST measuring capsule Q3 = 2.5 m3 / h, connection thread G2 ", M-bus radio communication, 10-year battery, up to 30 ° C	A6V12128928	716
JXF:WMK636.DTE00	Electronic multi-jet cold water meter for TE1 measuring capsule Q3 = 2.5 m3 / h, connection thread M62 x 2 mm, M-bus radio communication, 10-year battery, up to 30 ° C	A6V12128928	716
JXF:WMW636.DAL00	Electronic multi-jet hot water meter for A34 measuring capsule Q3 = 2.5 m3 / h, connection thread M77 x 1.5 mm, M-bus radio communication, 10-year battery, up to 90 ° C	A6V12128928	716
JXF:WMW636.DIS00	Electronic multi-jet hot water meter for IST measuring capsule Q3 = 2.5 m3 / h, connection thread G2 ", M-bus radio communication, 10-year battery, up to 90 ° C	A6V12128928	716
JXF:WMW636.DTE00	Electronic multi-jet hot water meter for TE1 measuring capsule Q3 = 2.5 m3 / h, connection thread M62 x 2 mm, M-bus radio communication, 10-year battery, up to 90 ° C	A6V12128928	716
JXF:WMXI.KBL1-001	Round cover with thrust tube in white	A6V12128928	712
JXF:WMXI.KBL1-002	Inner extensions for thrust tube (5 pcs./PU) in white	A6V12128928	712
JXF:WMXI.KBL1-003	Outer extensions for thrust tube (5 pcs./PU) in white	A6V12128928	712
JXF:WMXI.KBL1-004	Square front panel with white push tube		712
JXF:WMXI.KBL1-005	Blind cover white (set 5 pcs.)		712
JXF:WMXI.KCR1-001	Round cover with thrust tube in chrome look	A6V12128928	712
JXF:WMXI.KCR1-002	Inner extensions for thrust tube (5 pcs./PU) in chrome look	A6V12128928	712
JXF:WMXI.KCR1-003	Outer extensions for thrust tube (5 pcs./PU) in chrome look	A6V12128928	712
JXF:WMXI.KCR1-004	Square front panel with chrome-look push		712
JXF:WMXI.KCR1-005	Blind cover chrome look (set 5 pcs.)		712
JXF:WMZ.K5	Mounting key		712
M2FP03GX	2-port modulating pilot valve with magnetic actuator, PN32, AC 24 V, DC 0...10 V / 4...20 mA / 0...20 Phs to control main valves	N4731	627
M3FB15LX/A	Diverting/2-port refrigerant valve, solder connection, PN32, DN15, kvs 3, AC 24 V, DC 0...10 V / 4...20 mA / 0...20 Phs	N4721	628
M3FB15LX06/A	Diverting/2-port refrigerant valve, solder connection, PN32, DN15, kvs 0.6, AC 24 V, DC 0...10 V / 4...20 mA / 0...20 Phs	N4721	628
M3FB15LX15/A	Diverting/2-port refrigerant valve, solder connection, PN32, DN15, kvs 1.5, AC 24 V, DC 0...10 V / 4...20 mA / 0...20 Phs	N4721	628
M3FB20LX/A	Diverting/2-port refrigerant valve, solder connection, PN32, DN20, kvs 5, AC 24 V, DC 0...10 V / 4...20 mA / 0...20 Phs	N4721	628
M3FB25LX/A	Diverting/2-port refrigerant valve, solder connection, PN32, DN25, kvs 8, AC 24 V, DC 0...10 V / 4...20 mA / 0...20 Phs	N4721	628
M3FB32LX	Diverting/2-port refrigerant valve, solder connection, PN32, DN32, kvs 12, AC 24 V, DC 0...10 V / 4...20 mA / 0...20 Phs	N4721	628
M3FK15LX	Mixing/2-port refrigerant valve, solder connection, PN32, DN15, kvs 3, AC 24 V, DC 0...10 V / 4...20 mA / 0...20 Phs	N4722	629
M3FK15LX06	Mixing/2-port refrigerant valve, solder connection, PN32, DN15, kvs 0.6, AC 24 V, DC 0...10 V / 4...20 mA / 0...20 Phs	N4722	629
M3FK15LX15	Mixing/2-port refrigerant valve, solder connection, PN32, DN15, kvs 1.5, AC 24 V, DC 0...10 V / 4...20 mA / 0...20 Phs	N4722	629
M3FK20LX	Mixing/2-port refrigerant valve, solder connection, PN32, DN20, kvs 5, AC 24 V, DC 0...10 V / 4...20 mA / 0...20 Phs	N4722	629
M3FK25LX	Mixing/2-port refrigerant valve, solder connection, PN32, DN25, kvs 8, AC 24 V, DC 0...10 V / 4...20 mA / 0...20 Phs	N4722	629
M3FK32LX	Mixing/2-port refrigerant valve, solder connection, PN32, DN32, kvs 12, AC 24 V, DC 0...10 V / 4...20 mA / 0...20 Phs	N4722	629
M3FK40LX	Mixing/2-port refrigerant valve, solder connection, PN32, DN40, kvs 20, AC 24 V, DC 0...10 V / 4...20 mA / 0...20 Phs	N4722	629

Product no.	Product Title	Data sheet	Page
M3FK50LX	Mixing/2-port refrigerant valve, solder connection, PN32, DN50, kvs 30, AC 24 V, DC 0...10 V / 4...20 mA / 0...20 Phs	N4722	629
M3P100FY	Mixing/2-port magnetic control valve, flange, PN16, DN100, kvs 130, AC 24 V, DC 0/2...10 V / 4...20 mA	N4454	525
M3P80FY	Mixing/2-port magnetic control valve, flange, PN16, DN80, kvs 80, AC 24 V, DC 0/2...10 V / 4...20 mA	N4454	525
M-Bus	M-Bus metering system	N5361	741
MDB461.15-6.3AI	Valve & Actuator combi PN16 AC24V, PN16, DN15	A6V12170259	613
MDB461.20-10AI	Valve & Actuator combi PN16 AC24V, PN16, DN20	A6V12170259	613
MDB461.25-16AI	Valve & Actuator combi PN16 AC24V, PN16, DN25	A6V12170259	613
MLB461.32-25AI	Valve & Actuator combi PN16 AC24V, PN16, DN32	A6V12170259	613
MLB461.40-40AI	Valve & Actuator combi PN16 AC24V, PN16, DN40	A6V12170259	613
MLB461.50-63AI	Valve & Actuator combi PN16 AC24V, PN16, DN50	A6V12170259	613
MVF461H15-0.6	2-port magnetic control valve, flange, PN16, DN15, kvs 0.6, AC / DC 24 V, DC 0/2...10 V / 0/4...20 mA	N4361	481
MVF461H15-1.5	2-port magnetic control valve, flange, PN16, DN15, kvs 1.5, AC / DC 24 V, DC 0/2...10 V / 0/4...20 mA	N4361	481
MVF461H15-3	2-port seat magnetic control valve, flange, PN16, DN15, kvs 3, AC / DC 24 V, DC 0/2...10 V / 0/4...20 mA	N4361	481
MVF461H20-5	2-port seat magnetic control valve, flange, PN16 DN20, kvs 5, AC / DC 24 V, DC 0/2...10 V / 0/4...20 mA	N4361	481
MVF461H25-8	2-port seat magnetic control valve, flange, PN16 DN25, kvs 8, AC / DC 24 V, DC 0/2...10 V / 0/4...20 mA	N4361	481
MVF461H32-12	2-port seat magnetic control valve, flange, PN16 DN32, kvs 12, AC / DC 24 V, DC 0/2...10 V / 0/4...20 mA	N4361	481
MVF461H40-20	2-port seat magnetic control valve, flange, PN16 DN40, kvs 20, AC / DC 24 V, DC 0/2...10 V / 0/4...20 mA	N4361	481
MVF461H50-30	2-port seat magnetic control valve, flange, PN16 DN50, kvs 30, AC / DC 24 V, DC 0/2...10 V / 0/4...20 mA	N4361	481
MVI422.15	2-port zone valves & actuators, PN16	A6V11932500	622
MVI422.20	2-port zone valves & actuators, PN16	A6V11932500	622
MVI422.25	2-port zone valves & actuators, PN16	A6V11932500	622
MVL661.15-0.4	2-port refrigerant valve, internal solder connection, DN15, kvs 0.4, AC / DC 24 V, DC 0/2...10 V / 0/4...20 mA	N4714	624
MVL661.15-1.0	2-port refrigerant valve, internal solder connection, DN15, kvs 1.0, AC / DC 24 V, DC 0/2...10 V / 0/4...20 mA	N4714	624
MVL661.20-2.5	2-port refrigerant valve, internal solder connection, DN20, kvs 2.5, AC / DC 24 V, DC 0/2...10 V / 0/4...20 mA	N4714	624
MVL661.25-6.3	2-port refrigerant valve, internal solder connection, DN25, kvs 6.3, AC / DC 24 V, DC 0/2...10 V / 0/4...20 mA	N4714	624
MVL661.32-10	2-port refrigerant valve, internal solder connection, DN32, kvs 10, AC / DC 24 V, DC 0/2...10 V / 0/4...20 mA	N4714	624
MVL661.32-12	2-port refrigerant valve, internal solder connection, DN32, kvs 12, AC / DC 24 V, DC 0/2...10 V / 0/4...20 mA	N4714	624
MVS661.25-0.4N	2-port refrigerant valve, solder connection, PN 63, DN25, kvs 0.4, AC/DC 24 V, DC 0/2...10 V / 0/4...20 mA	N4717	625
MVS661.25-016N	2-port refrigerant valve, solder connection, PN 63, DN25, kvs 0.16, AC/DC 24 V, DC 0/2...10 V / 0/4...20 mA	N4717	625
MVS661.25-1.0N	2-port refrigerant valve, solder connection, PN 63, DN25, kvs 1.0, AC/DC 24 V, DC 0/2...10 V / 0/4...20 mA	N4717	625
MVS661.25-2.5N	2-port refrigerant valve, solder connection, PN 63, DN25, kvs 2.5, AC/DC 24 V, DC 0/2...10 V / 0/4...20 mA	N4717	625
MVS661.25-6.3N	2-port refrigerant valve, solder connection, PN 63, DN25, kvs 6.3, AC/DC 24 V, DC 0/2...10 V / 0/4...20 mA	N4717	625
MXF461.15-0.6	Mixing/2-port magnetic control valve, flange, PN16, DN15, kvs 0.6, AC / DC 24 V, DC 0/2...10 V / 4...20 mA	N4455	523

Product no.	Product Title	Data sheet	Page
MXF461.15-1.5	Mixing/2-port magnetic control valve, flange, PN16, DN15, kvs 1.5, AC / DC 24 V, DC 0/2...10 V / 4...20 mA	N4455	523
MXF461.15-3.0	Mixing/2-port magnetic control valve, flange, PN16, DN15, kvs 3, AC / DC 24 V, DC 0/2...10 V / 4...20 mA	N4455	523
MXF461.20-5.0	Mixing/2-port magnetic control valve, flange, PN16, DN20, kvs 5, AC / DC 24 V, DC 0/2...10 V / 4...20 mA	N4455	523
MXF461.25-8.0	Mixing/2-port magnetic control valve, flange, PN16, DN25, kvs 8, AC / DC 24 V, DC 0/2...10 V / 4...20 mA	N4455	523
MXF461.32-12	Mixing/2-port magnetic control valve, flange, PN16, DN32, kvs 12, AC / DC 24 V, DC 0/2...10 V / 4...20 mA	N4455	523
MXF461.40-20	Mixing/2-port magnetic control valve, flange, PN16, DN40, kvs 20, AC / DC 24 V, DC 0/2...10 V / 4...20 mA	N4455	523
MXF461.50-30	Mixing/2-port magnetic control valve, flange, PN16, DN50, kvs 30, AC / DC 24 V, DC 0/2...10 V / 4...20 mA	N4455	523
MXF461.65-50	Mixing/2-port magnetic control valve, flange, PN16, DN65, kvs 50, AC / DC 24 V, DC 0/2...10 V / 4...20 mA	N4455	523
MXG461.15-0.6	Mixing/2-port magnetic control valve, external thread, PN16, DN15, kvs 0.6, AC / DC 24 V, DC 0/2...10 V / 4...20 mA	N4455	538
MXG461.15-1.5	Mixing/2-port magnetic control valve, external thread, PN16, DN15, kvs 1.5, AC / DC 24 V, DC 0/2...10 V / 4...20 mA	N4455	538
MXG461.15-3.0	Mixing/2-port magnetic control valve, external thread, PN16, DN15, kvs 3, AC / DC 24 V, DC 0/2...10 V / 4...20 mA	N4455	538
MXG461.20-5.0	Mixing/2-port magnetic control valve, external thread, PN16, DN20, kvs 5, AC / DC 24 V, DC 0/2...10 V / 4...20 mA	N4455	538
MXG461.25-8.0	Mixing/2-port magnetic control valve, external thread, PN16, DN25, kvs 8, AC / DC 24 V, DC 0/2...10 V / 4...20 mA	N4455	538
MXG461.32-12	Mixing/2-port magnetic control valve, external thread, PN16, DN32, kvs 12, AC / DC 24 V, DC 0/2...10 V / 4...20 mA	N4455	538
MXG461.40-20	Mixing/2-port magnetic control valve, external thread, PN16, DN40, kvs 20, AC / DC 24 V, DC 0/2...10 V / 4...20 mA	N4455	538
MXG461.50-30	Mixing/2-port magnetic control valve, external thread, PN16, DN50, kvs 30, AC / DC 24 V, DC 0/2...10 V / 4...20 mA	N4455	538
MXG461B15-0.6	Mixing/2-port magnetic control valve, external thread, PN16, DN15, kvs 0.6, AC / DC 24 V, DC 0/2...10 V / 4...20 mA	N4461	540
MXG461B15-1.5	Mixing/2-port magnetic control valve, external thread, PN16, DN15, kvs 1.5, AC / DC 24 V, DC 0/2...10 V / 4...20 mA	N4461	540
MXG461B15-3	Mixing/2-port magnetic control valve, external thread, PN16, DN15, kvs 3, AC / DC 24 V, DC 0/2...10 V / 4...20 mA	N4461	540
MXG461B20-5	Mixing/2-port magnetic control valve, external thread, PN16, DN20, kvs 5, AC / DC 24 V, DC 0/2...10 V / 4...20 mA	N4461	540
MXG461B25-8	Mixing/2-port magnetic control valve, external thread, PN16, DN25, kvs 8, AC / DC 24 V, DC 0/2...10 V / 4...20 mA	N4461	540
MXG461B32-12	Mixing/2-port magnetic control valve, external thread, PN16, DN32, kvs 12, AC / DC 24 V, DC 0/2...10 V / 4...20 mA	N4461	540
MXG461B40-20	Mixing/2-port magnetic control valve, external thread, PN16, DN40, kvs 20, AC / DC 24 V, DC 0/2...10 V / 4...20 mA	N4461	540
MXG461B50-30	Mixing/2-port magnetic control valve, external thread, PN16, DN50, kvs 30, AC / DC 24 V, DC 0/2...10 V / 4...20 mA	N4461	540
MXG461S15-1.5	Mixing/2-port magnetic control valve, external thread, PN16, DN15, kvs 1.5, AC / DC 24 V, DC 0/2...10 V / 4...20 mA	N4465	542
MXG461S20-5.0	Mixing/2-port magnetic control valve, external thread, PN16, DN20, kvs 5, AC / DC 24 V, DC 0/2...10 V / 4...20 mA	N4465	542
MXG461S25-8.0	Mixing/2-port magnetic control valve, external thread, PN16, DN25, kvs 8, AC / DC 24 V, DC 0/2...10 V / 4...20 mA	N4465	542
MXG461S32-12	Mixing/2-port magnetic control valve, external thread, PN16, DN32, kvs 12, AC / DC 24 V, DC 0/2...10 V / 4...20 mA	N4465	542
MXG462S40-20	Mixing/2-port magnetic control valve, external thread, PN16, DN40, kvs 20, AC / DC 24 V, DC 0/2...10 V / 0/4...20 mA	N4466	543

Product no.	Product Title	Data sheet	Page
MXG462S50-30	Mixing/2-port magnetic control valve, external thread, PN16, DN50, kvs 30, AC / DC 24 V, DC 0/2...10 V / 0/4...20 mA	N4466	543
MXI422.15	3-port zone valves & actuators, PN16	A6V11932500	623
MXI422.20	3-port zone valves & actuators, PN16	A6V11932500	623
MXI422.25	3-port zone valves & actuators, PN16	A6V11932500	623
N 120/02	Choke, 640 mA	A6V10416067	156
N 125/02	Power supply unit DC 29 V, 160 mA with additional unchoked output, N 125/02	A6V10416069	156
N 125/12	Power supply unit DC 29 V, 320 mA with additional unchoked output, N 125/12	A6V10416069	156
N 125/22	Power supply unit DC 29 V, 640 mA with additional unchoked output, N 125/22	A6V10416069	156
N 140/13	Line/backbone coupler	A6V10416071	155
N 143/01	IP Gateway KNX/BACnet	A6V10466141	153
N 146/03	IP Router Secure	A6V11656735	152
N 148/12	USB Interface	A6V11535346	152
N 148/23	IP Interface Secure	A6V11689764	151
N 152/01	IP Control Center	A6V10417875	154
N 350E01	IP Controller	A6V10416135	151
OCI700.1	Service tool for KNX / LPB	N5655	145
OCI702	USB - KNX Service interface	A6V10438951	146
OCT100.R	Thread mesh extender		214
OCT200.KNBA	KNX IoT to BACnet IP gateway	A6V13434938	214
OZW672.01	Web Server for 1 LPB/BSB device	N5712	149
OZW672.04	Web Server for 4 LPB devices	N5712	149
OZW672.16	Web Server for 16 LPB devices	N5712	149
OZW772.01	Web server for 1 Synco device	N5701	147
OZW772.04	Web server for 4 Synco devices	N5701	147
OZW772.16	Web server for 16 Synco devices	N5701	147
OZW772.250	Web server for 250 Synco devices	N5701	147
QAA2010	Room temperature sensor Pt100	N1745	313
QAA2012	Room temperature sensor Pt1000	N1745	313
QAA2030	Room temperature sensor NTC10k	N1745	313
QAA2061	Room temperature sensor DC 0...10 V	N1749	315
QAA2061D	Room temperature sensor DC 0...10 V, with display	N1749	315
QAA2071	Room temperature sensor 4..20mA	N1749	315
QAA24	Room temperature sensor LG-Ni1000	N1721	313
QAA25	Room unit with room temperature sensor and setpoint adjuster	N1721	314
QAA26	Room unit with room temperature sensor and setpoint adjuster 5..30 °C	N1721	314
QAA27	Room unit with room temperature sensor and setpoint readjuster -3...3 K	N1721	314
QAA2890/WI	Wireless room sensor, KNX IoT/Thread, Temperature	A6V12871702	215
QAA32	Room temperature sensor NTC 3 kOhm	N1747	252
QAA64	Room temperature sensor LG-Ni1000 for mounting on recessed conduit boxes	N1722	315
QAC2010	Outside sensor Pt100	N1811	328
QAC2012	Outside sensor Pt1000	N1811	328
QAC2030	Outside sensor NTC10k	N1811	328
QAC22	Outside sensor LG-Ni1000	N1811	328
QAC3161	Outside/room temperature sensor DC 0...10 V	N1814	328
QAC3171	Outside/ room temperature sensor HQ 4..20mA	N1814	328
QAC32	Outside sensor NTC 575 Ohm	N1811	328
QAC34/101	Outside sensor, NTC 1k, -50...70 °C	N1811	328
QAD2010	Strap-on temperature sensor Pt100	N1801	327
QAD2012	Strap-on temperature sensor Pt1000	N1801	327
QAD2030	Strap-on temperature sensor NTC10k	N1801	327
QAD22	Strap-on temperature sensor LG-Ni1000	N1801	327
QAD26.220	Strap-on temperature sensor with cable LG-Ni1000	N1802	327
QAE1020.024	Immersion temperature sensor 4 x 240 mm, LG-Ni1000, -5...105°C	N1790	324

New Product

Product no.	Product Title	Data sheet	Page
QAE1612.010	Immersion temperature sensor	A6V12166488	321
QAE1630.010	Immersion temperature sensor NTC10K	A6V12166488	326
QAE2111.010	Immersion temperature sensor 100 mm Pt100, without protection pocket	N1781	322
QAE2111.015	Immersion temperature sensor 150 mm Pt100 without protection pocket	N1781	322
QAE2112.010	Immersion temperature sensor 100 mm Pt1000 without protection pocket	N1781	322
QAE2112.015	Immersion temperature sensor 150 mm Pt1000 without protection pocket	N1781	322
QAE2115.010	Immersion temperature sensor, passive	A6V12055741	322
QAE2115.015	Immersion temperature sensor, passive	A6V12055741	322
QAE2120.010	Immersion temperature sensor 100 mm LG-Ni1000, with protection pocket	N1781	322
QAE2120.015	Immersion temperature sensor 150 mm, LG-Ni1000, with protection pocket	N1781	322
QAE2121.010	Immersion temperature sensor 100 mm, LG-Ni1000, without protection pocket	N1781	322
QAE2121.015	Immersion temperature sensor 150 mm LG-Ni1000, without protection pocket	N1781	322
QAE2130.010	Immersion temperature sensor 100 mm NTC 10k without protection pocket	N1781	322
QAE2130.015	Immersion temperature sensor 150 mm NTC 10k without protection pocket	N1781	322
QAE2154.010/MO	Immersion temperature sensor 100 mm, Modbus	A6V11610252	323
QAE2164.010	Immersion temperature sensor 100 mm	N1782	323
QAE2164.015	Immersion temperature sensor 150 mm	N1782	323
QAE2174.010	Immersion temperature sensor 100 mm DC 4...20 mA	N1782	323
QAE2174.015	Immersion temperature sensor 150 mm DC 4...20 mA	N1782	323
QAE26.9	Immersion temperature sensor Ø 6 mm with cable and fitting	N1790	324
QAE26.90	Immersion temperature sensor 4 x 65 mm, LG-Ni1000, -50...180°C	N1790	324
QAE26.91	Immersion temperature sensor 4 x 125 mm, LG-Ni1000, -50...180°C	N1790	324
QAE26.93	Immersion temperature sensor 4 x 240 mm, LG-Ni1000, -50...180°C	N1790	324
QAE26.95	Immersion temperature sensor 4 x 465 mm, LG-Ni1000, -50...180°C	N1790	324
QAE3010.010	Immersion temperature sensor 100 mm, Pt100, direct immersion	N1794	325
QAE3010.016	Immersion temperature sensor 160 mm, Pt100, direct immersion	N1794	325
QAE3075.010	Immersion temperature sensor 100 mm, DC 4...20 mA, direct immersion	N1794	325
QAE3075.016	Immersion temperature sensor 160 mm, DC 4...20 mA, direct immersion	N1794	325
QAE3174.010	Immersion temperature sensor, 100 mm, DC 4...20 mA	A6V12694043	325
QAE3174.015	Immersion temperature sensor, 150 mm, DC 4...20 mA	A6V12694043	325
QAE3174D.010	Immersion temperature sensor, 100 mm, DC 4...20 mA	A6V12694043	325
QAE3174D.015	Immersion temperature sensor, 150 mm, DC 4...20 mA	A6V12694043	325
QAF63.2-J	Frost detector, modulating, capillary tube 2000 mm	A6V10432020	302
QAF63.6-J	Frost detector, modulating, capillary tube 6000 mm	A6V10432020	302
QAF64.2-J	Frost detector, modulating and 2-point, capillary tube 2000 mm	A6V10432022	304
QAF64.6-J	Frost detector, modulating and 2-point, capillary tube 6000 mm	A6V10432022	304
QAF65.3AR-J	Frost monitor, 2-point, capillary tube 3000 mm, -10...+15 °C	A6V12051788	302
QAF65.3M-J	Frost monitor, 2-point, capillary tube 3000 mm, -10...+15 °C, Reset button	A6V11965899	304
QAF65.6AR-J	Frost monitor, 2-point, capillary tube 6000 mm, -10...+15 °C	A6V12051788	303
QAF65.6M-J	Frost monitor, 2-point, capillary tube 6000 mm, -10...+15 °C, Reset button	A6V11965899	306
QAF81.3	Frost monitor, 2-point, capillary tube 3000 mm, -5...15 °C	N1284	306
QAF81.6	Frost monitor, 2-point, capillary tube 6000 mm, -5...15 °C	N1284	306
QAF81.6M	Frost monitor, 2-point, with manual reset, capillary tube 6000 mm, -5...15 °C	N1284	306
QAH11.1	Cable temperature sensor PVC 2.5 m, NTC 3 kOhm, without connectors	N1840	252
QAM1612.020	Duct Temp. sensor PT1000	A6V12251940	320
QAM1630.020	Duct temperature sensor NTC10K	A6V12251940	320
QAM2110.040	Duct temperature sensor 400 mm, Pt100	N1761	319
QAM2112.040	Duct temperature sensor 400 mm, Pt1000	N1761	319
QAM2112.200	Duct temperature sensor 2000 mm, Pt1000	N1761	319
QAM2120.040	Duct temperature sensor 400 mm, LG-Ni1000	N1761	319
QAM2120.200	Duct temperature sensor 2000 mm, LG-Ni1000	N1761	319
QAM2120.600	Duct temperature sensor 6000 mm, LG-Ni1000	N1761	319
QAM2130.040	Duct temperature sensor 400 mm, NTC 10k	N1761	319
QAM2151.040/MO	Duct temperature sensor 400 mm, Modbus	A6V11610632	319

Product no.	Product Title	Data sheet	Page
QAM2161.040	Duct temperature sensor 400 mm	N1762	319
QAM2171.040	Duct temperature sensor 400 mm, DC 4...20 mA	N1762	319
QAP1030.200	Cable temperature sensor PVC 2 m, NTC 10k	N1831	330
QAP1030/UFH	Cable temperature sensor PVC 4 m, NTC 3k	N1854	251
QAP2010.150	Cable temperature sensor silicone 1.5 m, Pt100	N1831	330
QAP2012.150	Cable temperature sensor silicone 1.5 m, Pt1000	N1831	330
QAP21.2	Cable temperature sensor for high-temperature applications (180°C)	N1833	330
QAP21.3	Cable temperature sensor silicone 1.5 m, LG-Ni1000	N1831	330
QAP21.3/8000	Cable temperature sensor silicone 8 m, LG-Ni1000	N1831	330
QAP22	Cable temperature sensor PVC 2 m, LG-Ni1000	N1831	330
QAT22	Window pane temperature sensor	N1830	329
QAW70-A	Multifunctional room unit, instructions in en, de, fr, it	N1637	85
QAW70-B	Multifunctional room unit, instructions in nl, sv, el, pl	N1637	85
QAW740	Room unit with KNX bus	N1633	94
QAX30.1	Room unit with sensor and PPS2 interface	N1741	170
QAX31.1	Room unit with sensor, setpoint adjuster and PPS2 interface	N1741	170
QAX32.1	Room unit with sensor, setpoint and operating mode selector and PPS2 interface	N1641	170
QAX33.1	Room unit with sensor, setpoint and operating mode selector, fan speed selection, and PPS2 interface	N1642	171
QAX34.3	Room unit with sensor, setpoint and operating mode selector, display and PPS2 interface	N1640	171
QAZ21.682/101	Temperature sensor with silicone cable 2 m, LG-Ni1000	N1848	331
QAZ21.685/101	Temperature sensor with silicone cable 5 m, LG-Ni1000	N1848	331
QBE1900-P32	Pressure switch QBE1900-P32	A6V12204470	371
QBE1900-P32M	Pressure switch QBE1900-P32M	A6V12204470	371
QBE1900-P7	Pressure switch QBE1900-P7	A6V12204470	371
QBE1900-P7M	Pressure switch QBE1900-P7M	A6V12204470	371
QBE2003-P1	Pressure sensor for neutral and slightly aggressive liquids and gases (0...10 V) 0...1 bar	A6V10432494	365
QBE2003-P1.6	Pressure sensor for neutral and slightly aggressive liquids and gases (0...10 V) 0...1.6 bar	A6V10432494	365
QBE2003-P10	Pressure sensor for neutral and slightly aggressive liquids and gases (0...10 V) 0...10 bar	A6V10432494	365
QBE2003-P16	Pressure sensor for neutral and slightly aggressive liquids and gases (0...10 V) 0...16 bar	A6V10432494	365
QBE2003-P2.5	Pressure sensor for neutral and slightly aggressive liquids and gases (0...10 V) 0...2.5 bar	A6V10432494	365
QBE2003-P25	Pressure sensor for neutral and slightly aggressive liquids and gases (0...10 V) 0...25 bar	A6V10432494	365
QBE2003-P4	Pressure sensor for neutral and slightly aggressive liquids and gases (0...10 V) 0...4 bar	A6V10432494	365
QBE2003-P40	Pressure sensor for neutral and slightly aggressive liquids and gases (0...10 V) 0...40 bar	A6V10432494	365
QBE2003-P6	Pressure sensor for neutral and slightly aggressive liquids and gases (0...10 V) 0...6 bar	A6V10432494	365
QBE2003-P60	Pressure sensor for neutral and slightly aggressive liquids and gases (0...10 V) 0...60 bar	A6V10432494	365
QBE2004-P10U	Pressure sensor for refrigerants (0...10 V) -1...9 bar	A6V10434676	372
QBE2004-P25U	Pressure sensor for refrigerants (0...10 V) -1...24 bar	A6V10434676	372
QBE2004-P30U	Pressure sensor for refrigerants (0...10 V) -1...29 bar	A6V10434676	372
QBE2004-P60U	Pressure sensor for refrigerants (0...10 V) -1...59 bar	A6V10434676	372
QBE2103-P1	Pressure sensor for neutral and slightly aggressive liquids and gases (4...20 mA) 0...1 bar	A6V10432494	366
QBE2103-P1.6	Pressure sensor for neutral and slightly aggressive liquids and gases (4...20 mA) 0...1.6 bar	A6V10432494	366
QBE2103-P10	Pressure sensor for neutral and slightly aggressive liquids and gases (4...20 mA) 0...10 bar	A6V10432494	366
QBE2103-P16	Pressure sensor for neutral and slightly aggressive liquids and gases (4...20 mA) 0...16 bar	A6V10432494	366

New Product

Product no.	Product Title	Data sheet	Page
QBE2103-P2.5	Pressure sensor for neutral and slightly aggressive liquids and gases (4...20 mA) 0...2.5 bar	A6V10432494	366
QBE2103-P25	Pressure sensor for neutral and slightly aggressive liquids and gases (4...20 mA) 0...25 bar	A6V10432494	366
QBE2103-P4	Pressure sensor for neutral and slightly aggressive liquids and gases (4...20 mA) 0...4 bar	A6V10432494	366
QBE2103-P40	Pressure sensor for neutral and slightly aggressive liquids and gases (4...20 mA) 0...40 bar	A6V10432494	366
QBE2103-P6	Pressure sensor for neutral and slightly aggressive liquids and gases (4...20 mA) 0...6 bar	A6V10432494	366
QBE2103-P60	Pressure sensor for neutral and slightly aggressive liquids and gases (4...20 mA) 0...60 bar	A6V10432494	366
QBE2104-P10U	Pressure sensor for refrigerants (4...20 mA) -1...9 bar	A6V10434676	373
QBE2104-P25U	Pressure sensor for refrigerants (4...20 mA) -1...24 bar	A6V10434676	373
QBE2104-P30U	Pressure sensor for refrigerants (4...20 mA) -1...29 bar	A6V10434676	373
QBE2104-P60U	Pressure sensor for refrigerants (4...20 mA) -1...59 bar	A6V10434676	373
QBE3000-D1	Differential pressure sensor for liquids and gase (0...10 V) 0...1 bar	N1922	369
QBE3000-D1.6	Differential pressure sensor for liquids and gase (0...10 V) 0...1.6 bar	N1922	369
QBE3000-D10	Differential pressure sensor for liquids and gase (0...10 V) 0...10 bar	N1922	369
QBE3000-D16	Differential pressure sensor for liquids and gase (0...10 V) 0...16 bar	N1922	369
QBE3000-D2.5	Differential pressure sensor for liquids and gase (0...10 V) 0...2.5 bar	N1922	369
QBE3000-D4	Differential pressure sensor for liquids and gase (0...10 V) 0...4 bar	N1922	369
QBE3000-D6	Differential pressure sensor for liquids and gase (0...10 V) 0...6 bar	N1922	369
QBE3100-D1	Differential pressure sensor for liquids and gase (4...20 mA) 0...1 bar	N1922	370
QBE3100-D1.6	Differential pressure sensor for liquids and gase (4...20 mA) 0...1.6 bar	N1922	370
QBE3100-D10	Differential pressure sensor for liquids and gase (4...20 mA) 0...10 bar	N1922	370
QBE3100-D16	Differential pressure sensor for liquids and gase (4...20 mA) 0...16 bar	N1922	370
QBE3100-D2.5	Differential pressure sensor for liquids and gase (4...20 mA) 0...2.5 bar	N1922	370
QBE3100-D4	Differential pressure sensor for liquids and gase (4...20 mA) 0...4 bar	N1922	370
QBE3100-D6	Differential pressure sensor for liquids and gase (4...20 mA) 0...6 bar	N1922	370
QBE61.3-DP10	Differential pressure sensor for liquids and gases 0...10 bar	N1923	367
QBE61.3-DP2	Differential pressure sensor for liquids and gases 0...2 bar	N1923	367
QBE61.3-DP5	Differential pressure sensor for liquids and gases 0...5 bar	N1923	367
QBE63-DP01	Differential pressure sensor for liquids and gases (DC 0...10 V) 0...10 kPa	N1920	368
QBE63-DP02	Differential pressure sensor for liquids and gases (DC 0...10 V) 0...20 kPa	N1920	368
QBE63-DP05	Differential pressure sensor for liquids and gases (DC 0...10 V) 0...50 kPa	N1920	368
QBE63-DP1	Differential pressure sensor for liquids and gases (DC 0...10 V) 0...100 kPa	N1920	368
QBM2030-1U	Differential pressure sensor, -50...50 Pa, -100...100 Pa, 0...100 Pa	N1910_01	357
QBM2030-30	Differential pressure sensor, 0...1000 Pa, 0...1500 Pa, 0...3000 Pa	N1910_01	357
QBM2030-5	Differential pressure sensor, 0...200 Pa, 0...250 Pa, 0...500 Pa	N1910_01	357
QBM2130-1U	Differential pressure sensor, -50...50 Pa, -100...100 Pa, 0...100 Pa, 4-20mA	A6V13420863	358
QBM2130-30	Differential pressure sensor, 0...1000 Pa, 0...1500 Pa, 0...3000 Pa, 4-20mA	A6V13420863	358
QBM2130-5	Differential pressure sensor, 0...200 Pa, 0...250 Pa, 0...500 Pa, 4-20mA	A6V13420863	359
QBM3020-1	Air duct differential pressure sensor, 0...100 Pa	N1916	360
QBM3020-10	Air duct differential pressure sensor, 0...1000 Pa	N1916	360
QBM3020-10D	Air duct differential pressure sensor with display, 0...1000 Pa	N1916	360
QBM3020-1D	Air duct differential pressure sensor with display, 0...100 Pa	N1916	360
QBM3020-1U	Air duct differential pressure sensor, -50...50 Pa	N1916	360
QBM3020-25	Air duct differential pressure sensor, 0...2500 Pa	N1916	360
QBM3020-25D	Air duct differential pressure sensor with display, 0...2500 Pa	N1916	360
QBM3020-3	Air duct differential pressure sensor, 0...300 Pa	N1916	360
QBM3020-3D	Air duct differential pressure sensor with display, 0...300 Pa	N1916	360
QBM3020-5	Air duct differential pressure sensor, 0...500 Pa	N1916	360
QBM3020-5D	Air duct differential pressure sensor with display, 0...500 Pa	N1916	360
QBM3120-1	Air duct differential pressure sensor, 0...100 Pa, DC 4...20 mA	N1916	360

Product no.	Product Title	Data sheet	Page
QBM3120-10	Air duct differential pressure sensor, 0...1000 Pa, DC 4...20 mA	N1916	360
QBM3120-10D	Air duct differential pressure sensor with display, 0...1000 Pa, DC 4...20 mA	N1916	360
QBM3120-1D	Air duct differential pressure sensor with display, 0...100 Pa, DC 4...20 mA	N1916	360
QBM3120-1U	Air duct differential pressure sensor, -50...50 Pa, DC 4...20 mA	N1916	360
QBM3120-1UD	Air duct differential pressure sensor with display, -50...50 Pa, DC 4...20 mA	N1916	360
QBM3120-25	Air duct differential pressure sensor, 0...2500 Pa, DC 4...20 mA	N1916	360
QBM3120-25D	Air duct differential pressure sensor with display, 0...2500 Pa, DC 4...20 mA	N1916	360
QBM3120-3	Air duct differential pressure sensor, 0...300 Pa, DC 4...20 mA	N1916	360
QBM3120-3D	Air duct differential pressure sensor with display, 0...300 Pa, DC 4...20 mA	N1916	360
QBM3120-5	Air duct differential pressure sensor, 0...500 Pa, DC 4...20 mA	N1916	360
QBM3120-5D	Air duct differential pressure sensor with display, 0...500 Pa, DC 4...20 mA	N1916	360
QBM3460-3	Air duct differential pressure sensor, 0...300 Pa for VAV	N1925	359
QBM3700-13/MO	Modus differential pressure sensor with I/O extension, 1 x 1250 Pa	A6V11684000	361
QBM3700-25/MO	Modus differential pressure sensor with I/O extension, 1 x 2500 Pa	A6V11684000	361
QBM3700-5/MO	Modus differential pressure sensor with I/O extension, 1 x 500 Pa	A6V11684000	361
QBM4000-1	Air duct differential pressure sensor 0...100 Pa, with calibration certificate	N1919_01	362
QBM4000-10	Air duct differential pressure sensor 0...1000 Pa, with calibration certificate	N1919_01	362
QBM4000-25	Air duct differential pressure sensor 0...2500 Pa, with calibration certificate	N1919_01	362
QBM4000-3	Air duct differential pressure sensor 0...300 Pa, with calibration certificate	N1919_01	362
QBM4100-1D	Air duct differential pressure sensor with display, 0...100 Pa, calibration certificate	N1919_01	363
QBM4100-1U	Air duct differential pressure sensor, with calibration certificate	N1919_01	363
QBM81-10	Differential pressure monitor, 100...1000 Pa	N1552	364
QBM81-20	Differential pressure monitor, 500...2000 Pa	N1552	364
QBM81-3	Differential pressure monitor, 20...300 Pa	N1552	364
QBM81-5	Differential pressure monitor, 50...500 Pa	N1552	364
QBM81-50	Differential pressure monitor, 1000...5000 Pa	N1552	364
QFA1000	Room hygrostat, setpoint setting range 30...90 % r.h., setpoint adjuster inside device	N1518	339
QFA1001	Room hygrostat, setpoint setting range 30...90 % r.h., external setpoint adjustment	N1518	339
QFA2000	Room sensor for humidity (DC 0...10 V)	N1857	332
QFA2001	Room sensor for humidity (DC 4...20mA)	N1857	332
QFA2020	Room sensor for humidity (DC 0...10 V) and temperature (LG-Ni1000)	N1857	332
QFA2050/MO	Room sensor Humidity/Temperature, Modbus	A6V12046135	332
QFA2050D/MO	Room sensor Humidity/Temperature, Display, Modbus	A6V12046135	332
QFA2060	Room sensor for humidity (DC 0...10 V) and temperature (DC 0...10 V)	N1857	332
QFA2060D	Room sensor for humidity (DC 0...10 V) and temperature (DC 0...10 V), with digital Display	N1857	332
QFA2068	Room sensor for humidity (DC 0...10 V) and temperature (DC 0...10 V)	A6V11600411	332
QFA2068D	Room sensor for humidity (DC 0...10 V) and temperature (DC 0...10 V), with digital Display	A6V11600411	333
QFA2071	Room sensor for humidity (DC 4...20mA) and temperature (DC 4...20mA)	N1857	332
QFA2079	Room sensor for humidity (DC 4...20 mA) and temperature (DC 4...20 mA)	A6V11600411	333
QFA2890/WI	Wireless room sensor, KNX IoT/Thread, Temperature & Humidity	A6V12871702	215
QFA3100	Room sensor for humidity (DC 0...10 V) for demanding requirements	N1858	335
QFA3101	Room sensor for humidity (4...20 mA) for demanding requirements	N1858	335
QFA3150/MO	Room sensor for humidity and temperature for demanding requirements Modbus	N1858	335
QFA3160	Room sensor for humidity (DC 0...10 V) and temperature (DC 0...10 V) for demanding requirements	N1858	335
QFA3160D	Room sensor for humidity (DC 0...10 V) and temperature (DC 0...10 V) for demanding requirements, with display	N1858	335
QFA3171	Room sensor for humidity (4...20 mA) and temperature (4...20 mA) for demanding requirements	N1858	335
QFA3171D	Room sensor for humidity (4...20 mA) and temperature (4...20 mA) for demanding requirements, with display	N1858	335
QFA3173	Room sensors for rel. humidity / temperature for demanding requirements	N1858	335
QFA3173D	Room sensors for rel. humidity / temperature for demanding requirements	N1858	335

New Product

Product no.	Product Title	Data sheet	Page
QFA4160	Room sensor for humidity (DC 0..10V) and temperature (DC 0..10V) with calibration certificate	N1859	336
QFA4160D	Room sensor for humidity (DC 0..10V) and temperature (DC 0..10V) with calibration certificate, with display	N1859	336
QFA4171	Room sensor for humidity (4..20mA) and temperature (4..20mA) with calibration certificate	N1859	336
QFA4171D	Room sensor for humidity (4..20mA) and temperature (4..20mA) with calibration certificate, with display	N1859	336
QFM1660	Duct sensor for humidity (0...10 V) and temperature (0...10 V)	Q3731	340
QFM2100	Duct sensor for humidity	N1864	340
QFM2101	Duct sensor for humidity (DC 4...20 mA)	N1864	340
QFM2120	Duct sensor for humidity and temperature	N1864	340
QFM2150/MO	Duct sensor for humidity and temperature Modbus	A6V11610635	340
QFM2160	Duct sensor for humidity and temperature	N1864	340
QFM2171	Duct sensor for humidity (DC 4...20 mA) and temperature (DC 4...20 mA)	N1864	340
QFM3100	Duct sensor for humidity for demanding requirements	N1882	341
QFM3101	Duct sensor for humidity (4...20 mA) for demanding requirements	N1882	341
QFM3150/MO	Duct sensor for humidity and temperature for demanding requirements Modbus	A6V11610638	341
QFM3160	Duct sensor for humidity and temperature for demanding requirements	N1882	341
QFM3160D	Duct sensor for humidity and temperature for demanding requirements, with display	N1882	341
QFM3171	Duct sensor for humidity (4...20 mA) and temperature (0...20 mA) for demanding requirements	N1882	341
QFM3171D	Duct sensor for humidity (4...20 mA) and temperature (0...20 mA) for demanding requirements, with display	N1882	341
QFM4160	Duct sensor for humidity (0...10 V) and temperature (0...10 V) with calibration certificate	N1883	342
QFM4171	Duct sensor for humidity (4...20 mA) and temperature (4...20 mA) with calibration certificate	N1883	342
QFM81.2	Duct hygrostat, setpoint setting range 15...95 % r.h.	N1514	343
QFM81.21	Room hygrostat, setpoint setting range 15...95 % r.h., setpoint adjuster inside device	N1514	343
QLS60	Solar sensor	N1943	377
QMX2.P33	Room operator unit for KNX PL-Link, room temperature sensor	A6V10733768	182
QMX2.P43	Room operator unit for KNX PL-Link, room temperature sensor and humidity sensor	A6V10733768	182
QMX3.MP1	Basic plate for conduit and cavity wall box	N1602	185
QMX3.P02	Room operator unit KNX with temperature sensor, configurable touchkeys, LED display, white	N1602	186
QMX3.P02-1BSC	Room operator unit KNX with temperature sensor, configurable touchkeys, LED display, black	N1602	186
QMX3.P30	Room sensor KNX for temperature, white	N1602	187
QMX3.P30-1BSC	Room sensor KNX for temperature, black	N1602	187
QMX3.P34	Room operator unit KNX with temperature sensor, segmented backlit display, touchkeys, white	N1602	187
QMX3.P34-1BSC	Room operator unit KNX with temperature sensor, segmented backlit display, touchkeys, black	N1602	188
QMX3.P35H	Room operator unit KNX PL-Link with temperature sensor, Dot matrix backlit display, touchscreen, white	A6V11521633	183
QMX3.P35H-BSC	Room operator unit KNX PL-Link with temperature sensor, Dot matrix backlit display, touchscreen, black	A6V11521633	183
QMX3.P36F	Room unit for KNX PL-Link, freely configurable, flush-mounted with square bezel	N1601	185
QMX3.P36G	Room unit for KNX PL-Link, freely configurable, flush-mounted with landscape bezel (3 modules landscape)	N1601	185
QMX3.P37	Room operator unit KNX with temperature sensor, segmented backlit display, configurable touchkeys, LED display, white	N1602	188
QMX3.P37-1BSC	Room operator unit KNX with temperature sensor, segmented backlit display, configurable touchkeys, LED display, black	N1602	188
QMX3.P38H	Room operator unit KNX PL-Link with temperature sensor, Dot matrix backlit display, touchscreen, Lighting/Blinds, white	A6V11521633	184

Product no.	Product Title	Data sheet	Page
QMX3.P38H-BSC	Room operator unit KNX PL-Link with temperature sensor, Dot matrix backlit display, touchscreen, Lighting/Blinds, black	A6V11521633	184
QMX3.P40	Room sensor KNX for temperature and humidity, white	N1602	189
QMX3.P40-1BSC	Room sensor KNX for temperature and humidity, black	N1602	189
QMX3.P44	Room operator unit KNX with sensors for temperature, humidity, segmented backlit display, touchkeys, white	N1602	189
QMX3.P44-1BSC	Room operator unit KNX with sensors for temperature, humidity, segmented backlit display, touchkeys, black	N1602	190
QMX3.P70	Room sensor KNX for temperature, humidity, CO2, white	N1602	190
QMX3.P70-1BSC	Room sensor KNX for temperature, humidity, CO2, black	N1602	190
QMX3.P74	Room operator unit KNX with sensors for temperature, humidity, CO2, segmented backlit display, touchkeys, white	N1602	191
QMX3.P74-1BSC	Room operator unit KNX with sensors for temperature, humidity, CO2, segmented backlit display, touchkeys, black	N1602	191
QMX3.P87-1WSC	Fume Hood Operator Display (Wide)		181
QMX3.P88-1WSC	Fume Hood Operator Display (Thin and Flush Mount)	A6V10959882	181
QNA2700D.BA1	IAQ multi-sensor BACnet IP, RESET Certified	A6V13589454	217
QNA2700D.BA2	IAQ multi-sensor BACnet MSTP, RESET Certified	A6V13589454	217
QNA2820D.AU	IAQ multi-sensor LoRaWAN AU, RESET Certified	A6V13589454	217
QNA2820D.EU	IAQ multi-sensor LoRaWAN EU, RESET Certified	A6V13589454	217
QNA2820D.US	IAQ multi-sensor LoRaWAN US, RESET Certified	A6V13589454	217
QPA1000	Room air quality sensor VOC	N1961	345
QPA1004	Room air quality sensor CO_2	A6V101099173	347
QPA1064	Room air quality sensor CO2 / temperature	A6V101099173	347
QPA2000	Room air quality sensor CO_2	N1961	345
QPA2002	Room air quality sensor CO_2+VOC	N1961	345
QPA2002D	Room air quality sensor CO_2+VOC with display	N1961	345
QPA2052/MO	Room sensor CO_2 /Humidity/Temperature Modbus	A6V12046144	345
QPA2060	Room air quality sensor CO_2+temperature	N1961	345
QPA2060D	Room air quality sensor CO_2+temperature with display	N1961	345
QPA2062	Room air quality sensor CO_2+temperature+rel. air humidity	N1961	345
QPA2062D	Room air quality sensor CO_2+temperature+rel. air humidity with display	N1961	345
QPA2080	Room air quality sensor CO_2+temperature (passiv)	N1961	345
QPA2080D	Room air quality sensor CO_2+temperature (passiv) with display	N1961	345
QPA2892/WI	Wireless room sensor, KNX IoT/Thread, Temperature, Humidity & CO2	A6V12871702	216
QPA84	Indoor air quality controller with integrated VOC sensor for mixed gas	N1571	346
QPM1100	Duct air quality sensor VOC	N1962	352
QPM1104	Duct air quality sensor CO_2	A6V101101338	353
QPM1160	Duct air quality sensor VOC + Temperature	N1962	352
QPM1162	Duct air quality sensor VOC, Humidity, Temperature	N1962	352
QPM1164	Duct air quality sensor CO_2/ temperature	A6V101101338	353
QPM2100	Duct air quality sensor CO_2	N1962	352
QPM2102	Duct air quality sensor CO_2+VOC	N1962	352
QPM2102/MO	Duct air quality sensor CO2+VOC Modbus	A6V11610641	353
QPM2102D	Duct air quality sensor CO_2+VOC with display	N1962	352
QPM2150/MO	Duct air quality sensor CO2+temperature Modbus	A6V11610641	353
QPM2152/MO	Duct air quality sensor CO2+temperature+rel. air humidity Modbus	A6V11610641	353
QPM2153/MO	Duct air quality sensor CO_2 / VOC / temperature / rel. humidity; Modbus	A6V11610641	353
QPM2160	Duct air quality sensor CO_2+temperature	N1962	352
QPM2160D	Duct air quality sensor CO_2+temperature with display	N1962	352
QPM2162	Duct air quality sensor CO_2+temperature+rel. air humidity	N1962	352
QPM2162D	Duct air quality sensor CO_2+temperature+rel. air humidity with d isplay	N1962	352
QPM2163	Duct air quality sensor CO_2, VOC, Humidity, Temperature	N1962	352
QPM2180	Duct air quality sensor CO_2+temperature (passiv)	N1962	352

New Product

Product no.	Product Title	Data sheet	Page
QSA2700	Fine dust sensor, 0-10V & Modbus	A6V11160938	354
QSA2700D	Fine dust sensor +display, 0-10V, Modbus	A6V11160938	354
QSM2100	Duct fine dust sensor PM	A6V11893002	355
QSM2162	Duct fine dust sensor PM, rel. humidity and temperature	A6V11893002	355
QVE1900	Flow switch for use in hydraulic systems, PN10, DN32...200	N1592	374
QVE1901	Flow switch for use in hydraulic systems, PN25, DN20...200	N1594	374
QVE1902.010	Flow switch for liquids in piping DN 10	N1596	375
QVE1902.015	Flow switch for liquids in piping DN 15	N1596	375
QVE1902.020	Flow switch for liquids in piping DN 20	N1596	375
QVE1902.025	Flow switch for liquids in piping DN 25	N1596	375
QVE3001	Flow sensor		181
QVM62.1	Duct sensor for air velocity	N1932	376
QXA2100	Condensation monitor	A6V10741072	344
QXA2101	Condensation monitor with remote sensor head (cable length 1 m)	A6V10741072	344
RAA11	Electromechanical room thermostat, public sector model	N3561	253
RAA21	Electromechanical room thermostat, basic model	N3562	254
RAA21/S	Electromechanical room thermostats	A6V13570619	253
RAA31	Electromechanical room thermostat with on/off switch	N3563	254
RAA31.16	Electromechanical room thermostat with on/off switch and LED	N3563	254
RAA31.26	Electromechanical room thermostat with on/off switch and LED, auxillary switch and LED	N3563	254
RAA41	Electromechanical room thermostat with selector heating/off/cooling, 1 output	N3564	255
RAA41/S	Electromechanical room thermostats	A6V13583431	253
RAB11	Electromechanical room thermostat for 2-pipe fan coils, selector heating/cooling	N3015	270
RAB11.1	Electromechanical room thermostat for 2-pipe fan coils, selector heating/cooling/fan only	N3015	270
RAB21	Electromechanical room thermostat for 2-pipe fan coils, basic model	N3016	271
RAB31	Electromechanical room thermostat for 4-pipe fan coils, selector heating/cooling	N3017	271
RAB31.1	Electromechanical room thermostat for 4-pipe fan coils, selector heating/cooling/fan only	N3017	271
RAB91	Fan speed switch, 3-stage	N3018	271
RAK-H-M	Terminal housing	N1207	301
RAK-ST.010FP-M	Safety temperature limiter fixed 95 °C, pocket 100 mm, capillary 700 mm	N1204	296
RAK-ST.020FP-M	Safety temperature limiter fixed 100 °C, pocket 100 mm, capillary 700 mm	N1204	296
RAK-ST.030FP-M	Safety temperature limiter fixed 110 °C, pocket 100 mm, capillary 700 mm	N1204	296
RAK-ST.1300P-M	Safety temperature limiter fixed 110...130 °C, pocket 100 mm, capillary 700 mm	N1204	296
RAK-ST.1310P-M	Safety temperature limiter fixed 90...110 °C, pocket 100 mm, capillary 700 mm	N1204	296
RAK-ST.1385M	Safety limit thermostat, 40...70 °C, capillary length 700 mm	N1204	296
RAK-ST.1430S-M	Safety temperature limiter fixed 80...100 °C, pocket 100 mm, capillary 700 mm	N1204	296
RAK-ST.1600MP	Safety limit thermostat, 95...130 °C, protection pocket 100 mm, capillary length 700 mm	N1204	296
RAK-TB.1400S-M	Temperature limiter, 45...60 °C, capillary 700 mm, clamping band	N1206	295
RAK-TB.1410B-M	Temperature limiter, 50...70 °C, pocked 100 mm, capillary 700 mm, clamping band	N1206	295
RAK-TB.1420S-M	Temperature limiter, 65...80 °C, capillary 700 mm, clamping band	N1206	295
RAK-TR.1000B-H	Temperature controller 15...95 °C, protection pocket 100 mm, capillary 700 mm, clamp on band	N1205	294
RAK-TR.1000S-H	Thermal reset limit thermostat, 15..95 °C, capillary tube 700 mm, clamping band	N1205	294
RAK-TR.1210B-H	Thermal reset limit thermostat, 15..82 °C, protective pocket 100 mm, capillary tube 700 mm, clamping band	N1205	294
RAK-TW.1000HB	Thermal reset limit thermostat, 15...95 °C, protection pocket 100 mm, capillary length 700 mm	N1202	295
RAK-TW.1000S-H	Thermal reset limit thermostat, 15...95 °C, capillary tube 700 mm, clamping band	N1202	294
RAK-TW.1200B-H	Thermal reset limit thermostat, 40...120 °C, protective pocket 100 mm, capillary tube 700 mm, clamping band	N1202	294

Product no.	Product Title	Data sheet	Page
RAK-TW.1200HP	Thermal reset limit thermostat, 40...120 °C, protection pocket 100 mm, capillary length 700 mm	N1202	295
RAK-TW.1200S-H	Thermal reset limit thermostat, 40...120 °C, capillary tube 700 mm, clamping band	N1202	294
RAK-TW.5000HS	Frost protection monitor, 5...65 °C, capillary length 1600 mm	N1203	307
RAK-TW.5000S-H	Frost protection monitor 5...65 °C, capillary tube 1600 mm, clamping band	N1203	307
RAK-TW.5010S-H	Frost protection monitor -10...50 °C, capillary tube 1600 mm, clamping band	N1203	307
RAM-TR.2000M	Strap-on temperature controller, 20...90 °C, fixing spring, setpoint adjuster externally	N1198	299
RAM-TW.2000M	Strap-on temperature limitation, 20...90 °C, fixing spring, setpoint adjuster internally	N1198	300
RAV11.1	Room thermostat with 24-hour time switch		267
RAZ-ST.011FP-J	Temperature controller/ safety temperature limiter, TR 15...95 °C/ STB 100 °C, dual protection pocket 100 mm, capillary tube each 700 mm	N1214	299
RAZ-ST.030FP-J	Temperature controller/ safety temperature limiter, TR 15...95 °C/ STB 110 °C, dual protection pocket 100 mm, capillary tube each 700 mm	N1214	299
RAZ-ST.1500P-J	Temperature controller/ safety temperature limiter, TR 15...95 °C/ STB 110...130 °C, dual protection pocket 100 mm, capillary tube each 700 mm	N1214	299
RAZ-ST.1510P-J	Temperature controller/ safety temperature limiter, TR 15...95 °C/ STB 90...110 °C, dual protection pocket 100 mm, capillary tube each 700 mm	N1214	299
RAZ-TW.1000P-J	Temperature controller/ thermal limit reset thermostat, TR 15...95 °C/ TW 15...95 °C, dual protection pocket 100 mm, capillary tube each 700 mm	N1212	298
RAZ-TW.1200P-J	Temperature controller/ thermal limit reset thermostat, TR 40...120 °C/ TW 40...120 °C, dual protection pocket 100 mm, capillary tube each 700 mm	N1212	298
RCC10	Room thermostat for 2-pipe fan coils, AC 230 V, positioning signal 2 pt, return air sensor	N3021	272
RCC20	Room thermostat for 2-pipe fan coils, AC 230 V, positioning signal 2 pt, return air sensor, el. heater	N3022	273
RCC30	Room thermostat for 4-pipe fan coils, AC 230 V, positioning signal 2pt, return air sensor	N3023	273
RCR110.2ZB	RCR110.2ZB Connected Home Receiver	A6V12680327	223
RCU10	Universal room thermostat for 4-pipe systems, AC 230 V, positioning signal 2 pt or PWM	N3041	256
RCU15	Universal room thermostat for 4-pipe systems, AC 24 V, positioning signal 2 pt or PWM	N3048	256
RCU50.2	Room thermostat for VAV and CAV systems, AC 24 V, positioning signal DC 0...10 V, manual changeover heating/cooling/off	N3045	287
RDB160BN	FCU/Universal App. Room Thermostat with BACnet MS/TP Communication	A6V11913047	244
RDD100	Room thermostat with LCD, AC 230 V	N1420	261
RDD100.1	Room thermostat with LCD, battery	N1420	261
RDD100.1RF	Wireless room thermostat with LCD	CB1N1424	266
RDD100.1-XA	Room thermostats with LCD		261
RDD310/EH	Flush-mount room thermostat for electric floor heating	N1440	268
RDD310/MM	Flush mount room thermostat for heating (SPDT) with no input, fit for square conduit boxes	N3066.1	268
RDD510/BP	Room thermostats in bulk pack of 20 units, white	A6V10889950	269
RDD510/BP.VS	Flush mount room thermostat for heating (SPDT), fit for square conduit boxes in bulk pack of 20 units, silver	A6V10889950	269
RDD810	Flush mount touch screen room thermostat for heating (SPDT) with 2x universal input, fit for both round and square conduit boxes		267
RDD810KN	Flush mount touch screen KNX room thermostat for heating (SPDT) with 2x universal input, fit for both round and square conduit boxes	N3175	246
RDE100	Room thermostat with auto time switch and LCD, AC 230 V	N1422	262
RDE100.1	Room thermostat with auto time switch and LCD, battery	N1422	262
RDE100.1DHW	Room thermostat with auto time switch and LCD, battery, independent DHW	N1423	263
RDE100.1RF	Wireless room thermostat with auto timer	CB1N1425	264
RDE100.1RFS	Wireless room thermostat with auto timer, incl. receiver	CB1N1425	264
RDE100.1RFS-XA	Wireless room thermostat with auto timer		265
RDE100.1-XA	Room thermostats with auto time switch and LCD		263
RDE410/EH	Flush-mount room thermostats with auto timer	N1440	268

Product no.	Product Title	Data sheet	Page
RDE-MZ6	Wireless Multizone Receiver	CB1N1428	266
RDF300.02	Flush mount room thermostat for 2-/4-pipe FCU with on/off output and 2x universal input, fit for square conduit boxes	N3076	285
RDF300.02/VB	Flush mount room thermostat for 2-/4-pipe FCU with on/off output and 2x universal input, fit for square conduit boxes, black	N3076	285
RDF302	Flush mount MODBUS room thermostat for 2-/4-pipe FCU with on/off outputs, 2x universal input optional electrical heater application, fit for square conduit boxes	N3079	242
RDF302.B	Flush mount MODBUS room thermostat for 2-/4-pipe FCU with on/off outputs and optional electrical heater application, fit for square conduit boxes	N3079	242
RDF302/VB	Flush mount MODBUS room thermostat for 2-/4-pipe FCU with on/off outputs, 2x universal input optional electrical heater application, fit for square conduit boxes, BLACK	N3079	242
RDF310.2/MM	Flush mount room thermostat for 2-pipe FCU with on/off output, fit for square conduit boxes	N3066	285
RDF340	Flush mount room thermostat for 2-/4-pipe FCU with DC valves, 3-speed fan and 2x universal input, fit for square conduit boxes	N3076	285
RDF510	Flush mount room thermostat for 2-pipe FCU with on/off output, fit for square conduit boxes	A6V10889950	283
RDF510/BP	Flush mount room thermostat for 2-pipe FCU with on/off output, fit for square conduit boxes in bulk pack of 20 units	A6V10889950	283
RDF510/BP.VB	Flush mount room thermostat for 2-pipe FCU with on/off output, fit for square conduit boxes in bulk pack of 20 units, black	A6V10889950	283
RDF510/BP.VG	Flush mount room thermostat for 2-pipe FCU with on/off output, fit for square conduit boxes in bulk pack of 20 units, gold	A6V10889950	283
RDF510/BP.VS	Flush mount room thermostat for 2-pipe FCU with on/off output, fit for square conduit boxes in bulk pack of 20 units, silver	A6V10889950	283
RDF530	Flush mount room thermostat for 4-pipe fan coils	A6V10889950	283
RDF530/BP	Flush mount room thermostat for 4-pipe FCU with on/off output, fit for square conduit boxes in bulk pack of 20 units	A6V10889950	283
RDF530/BP.VB	Flush mount room thermostat for 4-pipe FCU with on/off output, fit for square conduit boxes in bulk pack of 20 units, black	A6V10889950	283
RDF530/BP.VG	Flush mount room thermostat for 4-pipe FCU with on/off output, fit for square conduit boxes in bulk pack of 20 units, gold	A6V10889950	283
RDF530/BP.VS	Flush mount room thermostat for 4-pipe FCU with on/off output, fit for square conduit boxes in bulk pack of 20 units, silver	A6V10889950	283
RDF600	Flush mount room thermostat for 2-/4-pipe FCU with on/off output and 2x universal input, fit for both round and square conduit boxes	N3076	282
RDF600KN	Flush mount KNX room thermostat for 2-/4-pipe FCU with on/off output and 2x universal input, fit for both round and square conduit boxes	N3076	241
RDF600KN/S	Flush mount KNX room thermostat for 2-/4-pipe FCU with on/off output, KNX switching group, four buttons for switching lights and blinds and 2x universal input, fit for both round and square conduit boxes	N3076	241
RDF600KN/VB	Flush mount KNX room thermostat for 2-/4-pipe FCU with on/off output and 2x universal input, fit for both round and square conduit boxes, black	N3076	241
RDF600T	Flush mount room thermostat for 2-/4-pipe FCU with on/off output , time programs and 2x universal input, fit for both round and square conduit boxes, infrared remote control, 7-day time switch, backlit LCD	N3076	282
RDF660MB	Flush mount MODBUS room thermostat for 2-/4-pipe FCU with on/off valves, ECM fan and 2x universal input with optional electrical heater application, fit for both round and square conduit boxes	A6V12005486	243
RDF660MB/MM	Flush mount MODBUS room thermostat for 2-/4-pipe FCU with on/off valves, ECM fan and 2x basic input, fit for both round and square conduit boxes	A6V12005486	243
RDF660T	Flush mount room thermostat for 2-/4-pipe FCU with on/off valves, ECM fan, 7-day time switch, infrared remote control and 2x universal input, fit for both round and square conduit boxes	A6V12048672	282
RDF800	Flush mount touch room thermostat for 2-/4-pipe FCU with on/off output and 2x universal input, fit for both round and square conduit boxes	N3174	281
RDF800/VB	Flush mount touch room thermostat for 2-/4-pipe FCU with on/off output and 2x universal input, fit for both round and square conduit boxes, black color	A6V101123362	281

Product no.	Product Title	Data sheet	Page
RDF800KN	Flush mount touch KNX room thermostat for 2-/4-pipe FCU with on/off output and 2x universal input, fit for both round and square conduit boxes	N3174	240
RDF800KN/VB	Flush mount touch KNX room thermostat for 2-/4-pipe FCU with on/off output and 2x universal input, fit for both round and square conduit boxes, black	N3174	240
RDF870KN	Flush mount touch KNX PM2.5 & CO2 & Ventilation Controls with on/off or ECM fans selectable and 2x DC 0-10 V input, fit for both round and square conduit boxes	A6V11439454	248
RDF870MB	Flush mount touch MODBUS PM2.5 & CO2 & Ventilation Controls with on/off or ECM fans selectable and 2x DC 0-10 V input, fit for both round and square conduit boxes	A6V11439454	249
RDF880KN	Flush mount touch KNX room thermostat for heating applications and/or VRF Room Unit with KNX Interface to VRF Gateway, for square and round conduit boxes	A6V11282546	240
RDG100	Room thermostat, AC 230 V, for fan coil units and universal applications	N3181	276
RDG100T	Room thermostat, AC 230 V, for fan coil units and universal applications, 7-day time switch, vertical	N3181	278
RDG110	Room thermostat, AC 230 V, for fan coil units and heat pump applications	N3181	277
RDG160T	Room thermostat, AC 24 V, for fan coil units (3-speed or ECM fan), universal applications and heat pump applications. 7-day time switch. Outputs DC 0..10V or ON/OFF	N3181	279
RDG200KN	KNX communicating room thermostat. Outputs modulating (PWM / 3-pos.) or on/off. Fan coil (3-speed / DC fan), universal applications	A6V11545853	234
RDG200KN/BK	KNX communicating room thermostat in black. Outputs modulating (PWM / 3-pos.) or on/off. Fan coil (3-speed / DC fan), universal applications	A6V11545853	235
RDG200T	Room thermostats. Outputs modulating (PWM / 3-pos.) or on/off. Fan coil (3-speed / DC fan), universal applications	A6V13375643	280
RDG204KN	KNX communicating room thermostat with CO2 sensor. Outputs modulating (PWM / 3-pos.) or on/off. Fan coil (3-speed / DC fan), universal applications	A6V11545853	236
RDG260KN	KNX communicating room thermostat. Outputs modulating (DC) or on/off. Fan coil (3-speed / DC fan) or universal applications	A6V11545853	237
RDG260KN/BK	KNX communicating room thermostat in black. Outputs modulating (DC) or on/off. Fan coil (3-speed / DC fan) or universal applications	A6V11545853	238
RDG260T	Room thermostat standalone. Outputs modulating (DC) or on/off. Fan coil (3-speed / DC fan) or universal applications	A6V13375643	280
RDG264KN	KNX communicating room thermostat with CO2 sensor. Outputs modulating (DC) or on/off. Fan coil (3-speed / DC fan) or universal applications	A6V11545853	239
RDG400	Room thermostat, AC 24 V, VAV heating and cooling systems	N3182	289
RDG405KN	Room thermostat for temperature and air quality control with KNX communications, AC 24 V, VAV heating and cooling systems	N3192	245
RDH100	Room thermostat RDH100		259
RDH100RF/SET	Room thermostat radio frequency set (transmitter and receiver)		259
RDJ100	Room thermostat with 24-hour time switch and large LCD		260
RDJ100RF/SET	Room thermostat radio frequency set with 24-hour time switch (transmitter and receiver)		260
RDU340	Flush-mount room thermostat for rectangular conduit box with LCD for VAV application	N3078	288
RDY2000	RTU/HP Room Thermostat		291
RDY2000BN	RTU/HP Room Thermostat with BACnet MS/TP Communication		247
RDZ100ZB	Zigbee Room Thermostat RDZ100ZB	A6V13360592	224
RDZ101ZB	Zigbee Room Thermostat RDZ101ZB	A6V13360592	225
REV13	Room thermostat with 2-point control and 24-hour time switch, batteries, only heating	N2201	257
REV13DC	Room thermostat with 2-point control and 24-hour time switch, batteries, only heating, receive time signal DCF77	N2201	257
REV13-XA	Room thermostat with 2-point control and 24-hour time switch, batteries, only heating, blister packaging	N2201	257
REV24	Room thermostat with 2-point control and 7-day time switch, batteries, heating or cooling	N2205	257
REV24RF/SET	Room thermostat with 2-point control and 7-day time switch, receiver with relay outputs (RF set), batteries, heating or cooling	N2206	257

New Product

Product no.	Product Title	Data sheet	Page
REV24RF/SET-XA	Room thermostat with 2-point control and 7-day time switch, receiver with relay outputs (RF set), batteries, heating or cooling, blister packaging	N2206	257
REV24RFDC/SET	Room thermostat with 2-point control and 7-day time switch, receiver with relay outputs (RF set), batteries, heating or cooling, receive time signal DCF77	N2206	257
REV24-XA	Room thermostat with 2-point control and 7-day time switch, batteries, heating or cooling, blister packaging	N2205	257
REV34-XA	Room thermostat with 3-position control and 7-day time switch, batteries, heating or cooling, blister packaging	N2208	257
RL 512/23	Switching actuator 1 x AC 230 V, 16 AX, C load	A6V10416159	181
RLA162	Room temperature controller, AC 24 V, 2 outputs DC 0...10 V	N3331	107
RLE132	Immersion temperature controller, AC 230 V, 3-position output	N3334	71
RLE162	Immersion temperature controller, AC 24 V, DC 0...10 V output	N3333	72
RLM162	Air duct temperature controller, AC 24 V, 2 outputs DC 0...10 V	N3332	105
RLU202	Universal controller, 1 control loop, 2 relay outputs	N3101	108
RLU220	Universal controller, 1 control loop, 2 analog outputs	N3101	108
RLU222	Universal controller, 2 control loops, 2 analog and 2 relay outputs	N3101	108
RLU232	Universal controller, 2 control loops, 3 analog and 2 relay outputs	N3101	108
RLU236	Universal controller, 2 control loops, 3 analog and 6 relay outputs	N3101	108
RMB795B-1	Central control unit for room controllers and room thermostats	N3122	172
RMH760B-1	Heating controller	N3133	87
RMK770-1	Boiler sequence controller	N3132	88
RMS705B-1	Switching and monitoring device	N3124	126
RMU710B-1	Universal controller, 1 control loop	N3150	114
RMU720B-1	Universal controller, 2 control loops	N3150	114
RMU730B-1	Universal controller, 3 control loops	N3150	114
RMZ780	Module connector	N3138	96
RMZ782B	Heating circuit module	N3136	95
RMZ783B	DHW module	N3136	96
RMZ785	Universal module (8UI)	N3146	94
RMZ787	Universal module (4UI, 4DO)	N3146	94
RMZ788	Universal module (4UI, 2AO, 2DO)	N3146	94
RMZ789	Universal module (6UI, 2AO, 4DO)	N3146	94
RMZ790	Plug-in type operator unit	N3111	93
RMZ791	Detached operator unit with 3 m cable	N3112	93
RMZ792	Bus operator unit	N3113	93
RNNPH0010020	USB programming adapter	A6V10455680	737
RNNPH0020010	M-bus adapter plug for WFZ.MBM-USB		737
RPM.00-SD	Room Condition Monitor		180
RPM.125-SD	Room Condition Monitor with Pressure Sensor (+-125 Pa / +-0.5"WC)		180
RPM.12-SD	Room Condition Monitor with Pressure Sensor (+-12 Pa / +-0.05"WC)		180
RPM.250-SD	Room Condition Monitor with Pressure Sensor (+-250 Pa / +-1.0"WC)		180
RPM.25-SD	Room Condition Monitor with Pressure Sensor (+-25 Pa / +-0.1"WC)		180
RPM.62-SD	Room Condition Monitor with Pressure Sensor (+-62 Pa / +-0.25"WC)		180
RTN51	Thermostatic actuator, RAL 9016, matt	N2111	414
RTN51G	Thermostatic actuator, RAL 9016, glossy	N4211	414
RTN71	Thermostatic actuator with remote sensor	N2111	414
RTN81	Thermostatic actuator with remote adjuster	N2111	414
RVD120-A	Controller, 3 programmed plant types, instructions in da, de, en, fi, fr, it, sv	N2510	98
RVD140-A	Controller, 8 programmed plant types, instructions in da, de, en, fi, fr, it, sv	N2510	99
RVD250-A	Controller, 28 programmed plant types, instructions in de, en, fr, it, da, fi, sv	N2513	101
RVD260-A	Controller, 14 programmed plant types, instructions in de, en, fr, it, da, fi, sv	N2515	102
RVL479	Heating controller for a second heating circuit	N2543	84
RVL480	Heating controller for 1 heating circuit or boiler temperature control	N2540	81
RVL481	Heating controller for boiler temperature control and d.h.w. heating	N2541	82

Product no.	Product Title	Data sheet	Page
RVL482	Heating controller for boiler temperature control for modulating or 2-stage burners with d.h.w. heating	N2542	83
RVP201.0	Heating controller without time switch	N2464	74
RVP211.0	Heating controller without time switch, with d.h.w. heating	N2464	75
RVP340	Heating controller for 1 heating circuit	N2545	77
RVP350	Heating controller for 1 heating circuit and d.h.w.	N2545	78
RVP360	Heating controller for 2 heating circuits and d.h.w.	N2546	79
RWD60	Universal Controller, 1 Analog Output		112
RWD62	Universal controller, AC 24 V, 2 modulating outputs	N3342	112
RWD68	Universal controller, AC 24 V, 1 modulating and 1 2-point output	N3343	112
RWD82	Universal controller, AC 24 V, with 2 relay outputs	N3341	112
RWG1.M12	RWG1.M12 Universal building controller	A6V10733750	125
RWG1.M8	RWG1.M8 Universal controller	A6V10733750	125
RXB21.1/FC-10	Room controller for 3-speed fan	N3873	167
RXB21.1/FC-11	Room controller for 3-speed fan	N3873	167
RXB22.1/FC-12	Room controller with 3-speed fan and electric heating coil	N3873	167
RXB24.1/CC-02	Room controller for chilled ceilings and radiators	N3874	167
RXB39.1/FC-13	Room controller for fan-coil applications with KNX communication	N3875	168
RXZ20.1	Terminal cover for RXB2..	N3834	168
RXZ30.1	Terminal cover for RXB3..	N3840	168
S 258/12	Mounting plate		197
SAL31.00T10	Electromotoric actuator, 10 Nm, 90°, AC 230 V, 3P	N4502	582
SAL31.00T10F05/VI	Electromotoric actuator, 10 Nm, 90°, AC 230 V, 3P	N4502	582
SAL31.00T20	Electromotoric actuator, 20 Nm, 90°, AC 230 V, 3P	N4502	582
SAL31.00T40	Electromotoric actuator, 40 Nm, 90°, AC 230 V, 3P	N4502	582
SAL31.03T10	Electromotoric actuator, 10 Nm, 90°, AC 230 V, 3P, 30 s	N4502	582
SAL31.03T10/F05	Electromotoric actuator, 10 Nm, 90°, AC 230 V, 3P, 30 s	N4502	582
SAL61.00T10	Electromotoric actuator, 10 Nm, 90°, AC/DC 24 V, DC 0...10 V / DC 4...20 mA	N4502	582
SAL61.00T20	Electromotoric actuator, 20 Nm, 90°, AC/DC 24 V, DC 0...10 V / DC 4...20 mA	N4502	582
SAL61.00T40	Electromotoric actuator, 40 Nm, 90°, AC/DC 24 V, DC 0...10 V / DC 4...20 mA	N4502	582
SAL61.03T10	Electromotoric actuator, 10 Nm, 90°, AC/DC 24 V, DC 0...10 V / DC 4...20 mA, 30 s	N4502	582
SAL61.03T10/F05	Electromotoric actuator, 10 Nm, 90°, AC/DC 24 V, DC 0...10 V / DC 4...20 mA, 30 s	N4502	582
SAL81.00T10	Electromotoric actuator, 10 Nm, 90°, AC/DC 24 V, 3P	N4502	582
SAL81.00T20	Electromotoric actuator, 20 Nm, 90°, AC/DC 24 V, 3P	N4502	582
SAL81.00T40	Electromotoric actuator, 40 Nm, 90°, AC/DC 24 V, 3P	N4502	582
SAL81.03T10	Electromotoric actuator, 10 Nm, 90°, AC/DC 24 V, 3P, 30 s	N4502	582
SAL81.03T10/F05	Electromotoric actuator, 10 Nm, 90°, AC/DC 24 V, 3P, 30 s	N4502	582
SAS31.00	Electromotoric actuator, 400 N, 5.5 mm, AC 230 V, 3P, 120 s	N4581	436
SAS31.03	Electromotoric actuator, 400 N, 5.5 mm, AC 230 V, 3P, 30 s	N4581	436
SAS31.50	Electromotoric actuator, 400 N, 5.5 mm, AC 230 V, 3P, spring return function, 120 s	N4581	436
SAS31.53	Electromotoric actuator, 400 N, 5.5 mm, AC 230 V, 3P, spring return function, 30 s	N4581	436
SAS61.03	Electromotoric actuator, 400 N, 5.5 mm, AC/DC 24 V, DC 0...10 V / DC 4...20 mA, 30 s	N4581	436
SAS61.03/MO	Electromotoric actuators 400 N for valves with 5.5 mm stroke, Modbus RTU	N4581	436
SAS61.33	Electromotoric actuator, 400 N, 5.5 mm, AC/DC 24 V, DC 0...10 V / DC 4...20 mA, spring return function, 30 s	N4581	436
SAS61.33/MO	Electromotoric actuators 400 N for valves with 5.5 mm stroke, Modbus RTU, spring return function	N4581	436
SAS61.53	Electromotoric actuator, 400 N, 5.5 mm, AC/DC 24 V, DC 0...10 V / DC 4...20 mA, spring return function, 30 s	N4581	436
SAS81.00	Electromotoric actuator, 400 N, 5.5 mm, AC/DC 24 V, 3P, 120 s	N4581	436
SAS81.03	Electromotoric actuator, 400 N, 5.5 mm, AC/DC 24 V, 3P, 30 s	N4581	436
SAS81.33	Electromotoric actuator, 400 N, 5.5 mm, AC/DC 24 V, 3P, spring return function, 30 s	N4581	436
SAT31.008	Electromotoric actuator, 300 N, 5.5 mm, AC 230 V, 3P, 8 s	N4584	437
SAT31.51	Electromotoric actuator, 300 N, 5.5 mm, AC 230 V, 3P, spring return function, 15 s	N4584	437

New Product

Product no.	Product Title	Data sheet	Page
SAT61.008	Electromotoric actuator, 300 N, 5.5 mm, AC/DC 24 V, DC 0...10 V / DC 4...20 mA, 8 s	N4584	437
SAT61.008/MO	Electromotoric actuators 300 N for valves with 5.5 mm stroke, Modbus RTU	N4584	437
SAT61.51	Electromotoric actuator, 300 N, 5.5 mm, AC/DC 24 V, DC 0...10 V / DC 4...20 mA, spring return function, 15 s	N4584	437
SAT61.51/MO	Electromotoric actuators 300 N for valves with 5.5 mm stroke, Modbus RTU, spring return function	N4584	437
SAV31.00	Electromotoric actuator, 1600 N, 20/40 mm, AC 230 V, 3P	N4503	442
SAV31P00	Electromotoric actuator, 1100 N, 40 mm, AC 230 V, 3P, 120 s	N4510	443
SAV61.00	Electromotoric actuator, 1600 N, 20/40 mm, AC/DC 24 V, DC 0...10 V / DC 4...20 mA	N4503	442
SAV61.00/MO	Electromotoric actuators 1600 N for valves with 20/40 mm stroke, Modbus RTU	N4503	442
SAV61P00	Electromotoric actuator, 1100 N, 40 mm, AC/DC 24 V, DC 0...10 V/ DC 4...20 mA/ 0...1000 Ω, 120 s	N4510	443
SAV61P00/MO	Electromotoric actuators 1100 N for Combi valves VPF43../53.., Modbus RTU	N4510	443
SAV81.00	Electromotoric actuator, 1600 N, 20/40 mm, AC/DC 24 V, 3P	N4503	442
SAV81P00	Electromotoric actuator, 1100 N, 40 mm, AC/DC 24 V, 3P, 120 s	N4510	443
SAX31.00	Electromotoric actuator, 800 N, 20 mm, AC 230 V, 3P	N4501	439
SAX31.03	Electromotoric actuator, 800 N, 20 mm, AC 230 V, 3P, 30 s	N4501	439
SAX31P03	Electromotoric actuator, 500 N, 20 mm, AC 230 V, 3P, 30 s	N4509	440
SAX61.03	Electromotoric actuator, 800 N, 20 mm, AC/DC 24 V, DC 0...10 V / DC 4...20 mA, 30 s	N4501	439
SAX61.03/FX	Electromotoric actuator 800 N for valve with 20 mm stroke	N4501	439
SAX61.03/MO	Electromotoric actuators 800 N for valve with 20 mm stroke, Modbus RTU	N4501	439
SAX61P03	Electromotoric actuator, 500 N, 20 mm, AC/DC 24 V, DC 0...10 V / DC 4...20 mA, 30 s	N4509	440
SAX61P03/MO	Electromotoric actuators 500 N for Combi valves VPF43../53.., Modbus RTU	N4509	440
SAX81.00	Electromotoric actuator, 800 N, 20 mm, AC/DC 24 V, 3P	N4501	439
SAX81.03	Electromotoric actuator, 800 N, 20 mm, AC/DC 24 V, 3P, 30 s	N4501	439
SAX81P03	Electromotoric actuator, 500 N, 20 mm, AC/DC 24 V, 3P, 30 s	N4509	440
SAY31P03	Electromotoric actuator, 200 N, 15 mm, AC 230 V, 3P, 30 s	A6V10628469	441
SAY61P03	Electromotoric actuator, 200 N, 15 mm, AC/DC 24 V, DC 0...10 V / DC 4...20 mA, 30 s	A6V10628469	441
SAY61P03/MO	Electromotoric actuators 200 N for Combi valves VPI46 with a 15 mm stroke, Modbus RTU	A6V10628469	441
SAY81P03	Electromotoric actuator, 200 N, 15 mm, AC/DC 24 V, 3P, 30 s	A6V10628469	441
SBV151.00	Electromotoric actuator, AC 24 V, 4...20mA	CB1N4519en	445
SBV31	Electromotoric actuator, AC 230 V, 3-position	N4519	445
SBV31P	Electromotoric actuators 1600 N for Combi valves vPF44../VPF43../53..	A6V12232112	446
SBV61	Electromotoric actuator, AC 24 V, DC 0...10 V	N4519	445
SBV61P	Electromotoric actuators 1600 N for Combi valves VPF44../VPF54../VPF43../VPF53..	A6V12232112	446
SBV81	Electromotoric actuator, AC 24 V, 3-position	N4519	445
SBV81P	Electromotoric actuators 1600 N for Combi valves VPF44../VPF54../VPF43../VPF53..	A6V12232112	446
SBX151.00	electromotoric actuator, AC 24 V, 4...20mA	CB1N4519en	438
SBX31	Electromotoric actuator, AC 230 V, 3-position	N4519	438
SBX31P	Electromotoric actuators 700 N for PICV valves VPF44../VPF54..	A6V12232112	447
SBX61	Electromotoric actuator, AC 24 V, DC 0...10 V	N4519	438
SBX61P	Electromotoric actuators 700 N for PICV valves VPF44../VPF54..	A6V12232112	447
SBX81	Electromotoric actuator, AC 24 V, 3-position	N4519	438
SBX81P	Electromotoric actuators 1600 N for Combi valves VPF44../VPF54..	A6V12232112	447
SBY61P	Electromotoric actuators 300 N for PICV valves VPI46..	A6V12232112	447
SEA45.5	Current valve	N4938	133
SEH62.1	Digital time switch, 1-channel, with 7-day program	N5243	137
SEM61.4	Signal converter DC 0...10 V or DC 0 / 10 V in AC 0 / 24 V	N5102	133
SEM62.1	Transformer	N5536	138
SEM62.2	Transformer with switch and replaceable fuse	N5536	138
SEZ220	Signal converter with preprogrammed applications	N5146	134
SEZ91.6	Signal converter DC 0...20 V Phs to DC 0...10 V	N5143	135
SFA21/18	Electromotoric actuator, 200 N, 2.5 mm, AC 230 V, 2P	N4863	428

Product no.	Product Title	Data sheet	Page
SFA71/18	Electromotoric actuator, 200 N, 2.5 mm, AC 24 V, 2P	N4863	428
SFP21/18	Electromotoric actuator, 135 N, 2.5 mm, AC 230 V, 2P	N4865	425
SFP71/18	Electromotoric actuator, 135 N, 2.5 mm, AC 24 V, 2P	N4865	425
SKB32.50	Electrohydraulic actuator, 2800 N, 20 mm, AC 230 V, 3P	N4564	450
SKB32.51	Electrohydraulic actuator, 2800 N, 20 mm, AC 230 V, 3P, spring return	N4564	450
SKB60	Electrohydraulic actuator, 2800 N, 20 mm, AC 24 V, DC 0...10 V/4...20 mA	N4564	451
SKB62	Electrohydraulic actuator, 2800 N, 20 mm, AC 24 V, DC 0...10 V/4...20 mA, spring return	N4564	451
SKB62/MO	Electrohydraulic actuators 2800 N for valves with 20 mm stroke, Modbus RTU	N4564	451
SKB62U	Electrohydraulic actuator, 2800 N, 20 mm, AC 24 V, DC 0...10 V/4...20 mA, spring return, UL	N4564	451
SKB62UA	Electrohydraulic actuator, 2800 N, 20 mm, AC 24 V, DC 0...10 V/4...20 mA, spring return, UL	N4564	451
SKB82.50	Electrohydraulic actuator, 2800 N, 20 mm, AC 24 V, 3P	N4564	450
SKB82.50U	Electrohydraulic actuator, 2800 N, 20 mm, AC 24 V, 3P, UL	N4564	450
SKB82.51	Electrohydraulic actuator, 2800 N, 20 mm, AC 24 V, 3P, spring return	N4564	450
SKB82.51U	Electrohydraulic actuator, 2800 N, 20 mm, AC 24 V, 3P, spring return, UL	N4564	450
SKC32.60	Electrohydraulic actuator, 2800 N, 40 mm, AC 230 V, 3P	N4566	452
SKC32.61	Electrohydraulic actuator, 2800 N, 40 mm, AC 230 V, 3P, spring return	N4566	452
SKC60	Electrohydraulic actuator, 2800 N, 40 mm, AC 24 V, DC 0...10 V/4...20 mA	N4566	453
SKC62	Electrohydraulic actuator, 2800 N, 40 mm, AC 24 V, DC 0...10 V/4...20 mA, spring return	N4566	453
SKC62/MO	Electrohydraulic actuators 2800 N for valves with 40 mm stroke, Modbus RTU	N4566	453
SKC62U	Electrohydraulic actuator, 2800 N, 40 mm, AC 24 V, DC 0...10 V/4...20 mA, spring return, UL	N4566	453
SKC62UA	Electrohydraulic actuator, 2800 N, 40 mm, AC 24 V, DC 0...10 V/4...20 mA, spring return, UL	N4566	453
SKC82.60	Electrohydraulic actuator, 2800 N, 40 mm, AC 24 V, 3P	N4566	452
SKC82.60U	Electrohydraulic actuator, 2800 N, 40 mm, AC 24 V, 3P, UL	N4566	452
SKC82.61	Electrohydraulic actuator, 2800 N, 40 mm, AC 24 V, 3P, spring return	N4566	452
SKC82.61U	Electrohydraulic actuator, 2800 N, 40 mm, AC 24 V, 3P, spring return, UL	N4566	452
SKD32.21	Electrohydraulic actuator, 1000 N, 20 mm, AC 230 V, 3P, spring return	N4561	448
SKD32.50	Electrohydraulic actuator, 1000 N, 20 mm, AC 230 V, 3P	N4561	448
SKD32.51	Electrohydraulic actuator, 1000 N, 20 mm, AC 230 V, 3P, spring return	N4561	448
SKD60	Electrohydraulic actuator, 1000 N, 20 mm, AC 24 V, DC 0...10/V 4...20 mA	N4561	449
SKD60U	Electrohydraulic actuator, 1000 N, 20 mm, AC 24 V, DC 0...10/V 4...20 mA, UL	N4561	449
SKD62	Electrohydraulic actuator, 1000 N, 20 mm, AC 24 V, DC 0...10 V/4...20 mA, spring return	N4561	449
SKD62/MO	Electrohydraulic actuators 1000 N for valves with 20 mm stroke, Modbus RTU	N4561	449
SKD62U	Electrohydraulic actuator, 1000 N, 20 mm, AC 24 V, DC 0...10 V/4...20 mA, spring return, UL	N4561	449
SKD62UA	Electrohydraulic actuator, 1000 N, 20 mm, AC 24 V, DC 0...10 V/4...20 mA, spring return, UL	N4561	449
SKD82.50	Electrohydraulic actuator, 1000 N, 20 mm, AC 24 V, 3P	N4561	448
SKD82.50U	Electrohydraulic actuator, 1000 N, 20 mm, AC 24 V, 3P, UL	N4561	448
SKD82.51	Electrohydraulic actuator, 1000 N, 20 mm, AC 24 V, 3P, spring return	N4561	448
SKD82.51U	Electrohydraulic actuator, 1000 N, 20 mm, AC 24 V, 3P, spring return, UL	N4561	448
SQL131A00T20	Electromotoric rotary actuator for ball valves, AC/DC 24 V, 3P, 20Nm	A6V13769562	586
SQL131A00T35	Electromotoric rotary actuator for ball valves, AC/DC 24 V, 3P, 35Nm	A6V13769562	586
SQL131A00T50	Electromotoric rotary actuator for ball valves, AC/DC 24 V, 3P, 50Nm	A6V13769562	586
SQL161A00T20	Electromotoric rotary actuator for ball valves, AC/DC 24 V, modulating, 20Nm	A6V13769562	586
SQL161A00T35	Electromotoric rotary actuator for ball valves, AC/DC 24 V, modulating, 35Nm	A6V13769562	586
SQL161A00T50	Electromotoric rotary actuator for ball valves, AC/DC 24 V, modulating, 50Nm	A6V13769562	586
SQL321B1400	Electromotoric actuator, 2P, 1400 Nm	N4520	585
SQL321B150	Electromotoric actuator, 2P, 150 Nm	N4520	585

New Product

Product no.	Product Title	Data sheet	Page
SQL321B25	Electromotoric actuator, 2P, 25 Nm	N4520	585
SQL321B2650	Electromotoric actuator, 2P, 2650 Nm	N4520	585
SQL321B270	Electromotoric actuator, 2P, 270 Nm	N4520	585
SQL321B50	Electromotoric actuator, 2P, 50 Nm	N4520	585
SQL321B570	Electromotoric actuator, 2P, 570 Nm	N4520	585
SQL321B6000	Electromotoric actuators 6000 Nm for butterfly valves VKF42../VFF41..	N4520	585
SQL331A00T20	Electromotoric rotary actuator for ball valves, 230V, 3P, 20Nm	A6V13769562	586
SQL331A00T35	Electromotoric rotary actuator for ball valves, 230V, 3P, 35Nm	A6V13769562	586
SQL331A00T50	Electromotoric rotary actuator for ball valves, 230V, 3P, 50Nm	A6V13769562	586
SQL341E100	Electromotoric actuator, 100 Nm, 90°, AC 230 V, on/off and 3P	A6V13343014	584
SQL341E1200	Electromotoric actuator, 1200Nm, 90°, AC 230 V, on/off and 3P	A6V13343014	584
SQL341E25	Electromotoric actuator, 25Nm, 90°, AC 230 V, on/off and 3P	A6V13343014	584
SQL341E40	Electromotoric actuator, 40 Nm, 90°, AC 230 V, on/off and 3P	A6V13343014	584
SQL341E400	Electromotoric actuator, 400Nm, 90°, AC 230 V, on/off and 3P	A6V13343014	584
SQL351B6000	Electromotoric actuators 6000 Nm for butterfly valves	N4520	585
SQL361B1400	Electromotoric actuator, DC 0...10 V, 1400 Nm	N4520	585
SQL361B150	Electromotoric actuator, DC 0...10 V, 150 Nm	N4520	585
SQL361B2650	Electromotoric actuator, DC 0...10 V, 2650 Nm	N4520	585
SQL361B270	Electromotoric actuator, DC 0...10 V, 270 Nm	N4520	585
SQL361B50	Electromotoric actuator, DC 0...10 V, 50 Nm	N4520	585
SQL361B570	Electromotoric actuator, DC 0...10 V, 570 Nm	N4520	585
SQL361B6000	Electromotoric actuators 6000 Nm for butterfly valves	N4520	585
SQL361E100	Electromotoric actuator, 100 Nm, 90°, AC 230 V, DC 0...10 V, 4...20 mA control signal	A6V13343014	584
SQL361E1200	Electromotoric actuator, 1200Nm, 90°, AC 230 V, DC 0...10 V, 4...20 mA control signal	A6V13343014	584
SQL361E25	Electromotoric actuator, 25Nm, 90°, AC 230 V, DC 0...10 V, 4...20 mA control signal	A6V13343014	584
SQL361E40	Electromotoric actuator, 40Nm, 90°, AC 230 V, DC 0...10 V, 4...20 mA control signal	A6V13343014	584
SQL361E400	Electromotoric actuator, 400Nm, 90°, AC 230 V, DC 0...10 V, 4...20 mA control signal	A6V13343014	584
SQL36E110	Electromotoric actuator, 400 Nm, 90°, AC 230 V, 3P	N4505	584
SQL36E160	Electromotoric actuator, 1200 Nm, 90°, AC 230 V, 3P	N4505	584
SQL36E50F04	Electromotoric actuator, 40 Nm, 90°, AC 230 V, 3P, F04 connection	N4505	584
SQL36E50F05	Electromotoric actuator, 40 Nm, 90°, AC 230 V, 3P, F05 connection	N4505	584
SQL36E65	Electromotoric actuator, 100 Nm, 90°, AC 230 V, 3P	N4505	584
SQV91P30	Electromotoric actuator, 1100 N, 20/40 mm, AC/DC 24 V, 3P / DC 0...10 V / DC 4...20 mA, spring return function, retracted, 120 s	N4833	444
SQV91P40	Electromotoric actuator, 1100 N, 20/40 mm, AC/DC 24 V, 3P / DC 0...10 V / DC 4...20 mA, spring return function, extended, 120 s	N4833	444
SSA118.09HKN	Electromotoric actuators 100 N for valves with 1.2..6.5 mm stroke	A6V11858280	423
SSA131.00	Electromotoric actuators 100 N for valves with 1.2...6.5 mm stroke	A6V11858276	422
SSA151.05HF	Electromotoric actuators 100 N for valves with 1.2...6.5 mm stroke	A6V11858278	422
SSA161.05	Electromotoric actuators 100 N for valves with 1.2...6.5 mm stroke	A6V11858276	422
SSA161.05HF	Electromotoric actuators 100 N for valves with 1.2...6.5 mm stroke	A6V11858278	422
SSA161E.05HF	Electromotoric actuators 100 N for valves with 1.2...6.5 mm stroke	A6V11858278	422
SSA31.04	Electromotoric actuator, 160 N, 2.5 mm, 1.5 m, AC 230 V, 3P, SPDT	N4860	424
SSA31.1	Electromotoric actuator, 100 N, 2.5/5 mm, 1.5 m, AC 230 V, 3P, auxiliary switch	N4893	422
SSA331.00	Electromotoric actuators 100 N for valves with 1.2...6.5 mm stroke	A6V11858276	422
SSA81.1	Electromotoric actuator, 100 N, 2.5/5 mm, 1.5 m, AC 24 V, 3P, auxiliary switch	N4893	422
SSA911.02ZB	Connected Home wireless room actuator, ZigBee	A6V12789814	225
SSB161.05HF	Electromotoric actuator, 200 N, 1.2...6.5 mm, AC/DC 24 V, DC 0...10 V	A6V12681511	430
SSB161.05HF/00	Electromotoric actuator, 200 N, 1.2...6.5 mm, AC/DC 24 V, DC 0...10 V	A6V12681511	430
SSB161.05UT	Electromotoric actuator, 200 N, 1.2...6.5 mm, AC/DC 24 V, DC 0...10 V	A6V13359034	433
SSB31	Electromotoric actuator, 200 N, 5.5 mm, AC 230 V, 1.5 m, 3P	N4891	429
SSB31.1	Electromotoric actuator, 200 N, 5.5 mm, AC 230 V, 1.5 m, 3P, auxiliary switch	N4891	429
SSB61	Electromotoric actuator, 200 N, 5.5 mm, AC/DC 24 V, 1.5 m, DC 0...10 V	N4891	429
SSB81	Electromotoric actuator, 200 N, 5.5 mm, AC 24 V, 1.5 m, 3P	N4891	429

Product no.	Product Title	Data sheet	Page
SSB81.1	Electromotoric actuator, 200 N, 5.5 mm, AC 24 V, 1.5 m, 3P, auxiliary switch	N4891	429
SSC161.05HF	Electromotoric actuator, 300 N, 1.2...6.5 mm, AC/DC 24 V, DC 0...10 V	A6V12681511	434
SSC161.05HF/00	Electromotoric actuator, 300 N, 1.2...6.5 mm, AC/DC 24 V, DC 0...10 V	A6V12681511	434
SSC161.05UT	Electromotoric actuator, 300 N, 1.2...6.5 mm, AC/DC 24 V, DC 0...10 V	A6V13359035	435
SSC31	Electromotoric actuator, 300 N, for valves with 5.5 mm stroke	N4895	433
SSC61	Electromotoric actuator, 300 N, 5.5 mm, AC/DC 24 V, DC 0...10 V	N4895	433
SSC61.5	Electromotoric actuator, 300 N, 5.5 mm, AC/DC 24 V, DC 0...10 V, fail-safe	N4895	433
SSC81	Electromotoric actuator, 300 N, 5.5 mm, AC 24 V, 3P	N4895	433
SSF161.05HF	Electromotoric actuator, 200 N, 1.2...6.5 mm, AC/DC 24 V, DC 0...10 V	A6V12681511	431
SSF161.05HF/00	Electromotoric actuator, 200 N, 1.2...6.5 mm, AC/DC 24 V, DC 0...10 V	A6V12681511	432
SSP31	Electromotoric actuator, 160 N, 2.5 mm, 1.5 m, AC 230 V, 3P	N4864	427
SSP61	Electromotoric actuator, 160 N, 2.5 mm, 1.5 m, AC/DC 24 V, DC 0...10 V	N4864	427
SSP81	Electromotoric actuator, 160 N, 2.5 mm, 1.5 m, AC 24 V, 3P	N4864	427
SSP81.04	Electromotoric actuator, 160 N, 2.5 mm, 1.5 m, AC 24 V, 3P	N4864	427
STA121	Electrothermal actuator, 110N, 1m, AC/DC24V, 2P, NC	A6V12968650	416
STA121.40L10	Thermal Actuator AC/DC 24 V NC 4.0mm 1m on/off	A6V14028280	418
STA121.65/00	Thermal Actuator AC/DC24V NC 6.5mm plug on/off	A6V14028280	420
STA121.65H20	Thermal Actuator AC/DC24V NC 6.5mm 2m on/off	A6V14028280	420
STA121.65L10	Thermal Actuator AC/DC24V NC 6.5mm 1m on/off	A6V14028280	420
STA121.65L20	Thermal Actuator AC/DC24V NC 6.5mm 2m on/off	A6V14028280	420
STA121.L20	Electrothermal actuator, 110N, 2m, AC/DC24V, 2P, NC	A6V12968650	416
STA121.L20H	Electrothermal actuator, 110N, 2m, AC/DC24V, 2P, NC	A6V12968650	416
STA121.L50	Electrothermal actuator, 110N, 5m, AC/DC24V, 2P, NC	A6V12968650	416
STA126.40L10	Thermal Actuator AC/DC 24V NC 4.0mm 1m on/off	A6V14028280	418
STA161.40L10	Thermal Actuator AC 24 V NC 4.0mm 1m 0..10V	A6V14028280	418
STA161.65L10	Thermal Actuator AC 24V NC 6.5mm 1m 0..10V	A6V14028280	420
STA162.65L10	Thermal Actuator AC/DC24V NC 6.5mm 1m 0..10V	A6V14028280	420
STA23	Electrothermal actuator, AC 230 V, NC, 2P, 1 m	N4884	415
STA321	Electrothermal actuator, 110N, 1m, AC230V, 2P, NC	A6V12968650	416
STA321.40L10	Thermal Actuator AC230 V NC 4.0mm 1m on/off	A6V14028280	418
STA321.65/00	Thermal Actuator AC230V NC 6.5mm plug on/off	A6V14028280	420
STA321.65H20	Thermal Actuator AC230V NC 6.5mm 2m on/off	A6V14028280	420
STA321.65L10	Thermal Actuator AC230V NC 6.5mm 1m on/off	A6V14028280	420
STA321.65L20	Thermal Actuator AC230V NC 6.5mm 2m on/off	A6V14028280	420
STA321.L20	Electrothermal actuator, 110N, 2m, AC230V, 2P, NC	A6V12968650	416
STA321.L20H	Electrothermal actuator, 110N, 2m, AC230V, 2P, NC	A6V12968650	416
STA321.L50	Electrothermal actuator, 110N, 5m, AC230V, 2P, NC	A6V12968650	416
STA326.40L10	Thermal Actuator AC 230V NC 4.0mm 1m on/off	A6V14028280	418
STA63	Electrothermal actuator, AC 24 V, NC, DC 0...10 V, 2 m	N4884	415
STA73	Electrothermal actuator, AC/DC 24 V, NC, 2P, PDM, 1 m	N4884	415
STA73/00	Electrothermal actuator, AC/DC 24 V, NC, 2P, PDM	N4884	415
STP121	Electrothermal actuator, 110N, 1m, AC/DC24V, 2P, NO	A6V12968650	417
STP121.40L10	Thermal Actuator AC/DC 24V NO 4.0mm 1m on/off		419
STP121.65/00	Thermal Actuator AC/DC24V NO 6.5mm plug on/off		421
STP121.65L10	Thermal Actuator AC/DC24V NO 6.5mm 1m on/off		421
STP121.65L20	Thermal Actuator AC/DC 24V NO 6.5mm 2m on/off		421
STP121.L20	Electrothermal actuator, 110N, 2m, AC/DC24V, 2P, NO	A6V12968650	417
STP121.L50	Electrothermal actuator, 110N, 5m, AC/DC24V, 2P, NO	A6V12968650	417
STP161.40L10	Thermal Actuator AC 24 V NO 4.0mm 1m 0...10V		419
STP161.65L10	Thermal Actuator AC 24V NO 6.5mm 1m 0..10V		421
STP162.65L10	Thermal Actuator AC/DC24V NO 6.5mm 1m 0..10V		421
STP321	Electrothermal actuator, 110N, 1m, AC230V, 2P, NO	A6V12968650	417
STP321.40L10	Thermal Actuator AC230V NO 4mm 1m on/off		419
STP321.65/00	Thermal Actuator AC230V NO 6.5mm plug on/off		421

New Product

Product no.	Product Title	Data sheet	Page
STP321.65L10			421
STP321.65L20	Thermal Actuator AC230V NO 6.5mm 2m on/off		421
STP321.L20	Electrothermal actuator, 110N, 2m, AC230V, 2P, NO	A6V12968650	417
STP321.L50	Electrothermal actuator, 110N, 5m, AC230V, 2P, NO	A6V12968650	417
STP73	Electrothermal actuator, AC/DC 24 V, NO, 2P, 1 m	N4884	492
SUA21/3	Electromotoric actuator, 170 N, 0.8m, AC 230 V, 2P	A6V10446174	426
SUA21/3P	Electromotoric actuator 100 N for combi valves	A6V11780780	426
SUE21P	Electromotoric actuator 100 N for combi valves	A6V11780777	426
TKM2	Thermal reset limit thermostat for air ducts, 20...110 °C; perforated protection pocket 200mm	N1291	297
TRG2	Room thermostat with helix sensor, TR -5..50 °C	N1329	308
TRG22	Room thermostat with helix sensor, TR -5..50 °C, 2 switches on 2 steps 2..12 K difference	N1329	308
UA1T	Power amplifier for thermal actuators AC 24 V, PWM	N3591	134
UH50-A05-00	Ultrasonic heat meter 0.6 m3/h, DS M10x1 mm, G 3/4"	N5324	728
UH50-A21-00	Ultrasonic heat meter 1.5 m3/h, DS M10x1 mm, G 3/4", 110 mm	N5324	728
UH50-A23-00	Ultrasonic heat meter 1.5 m3/h, DS M10x1 mm, G 1", 190 mm	N5324	728
UH50-A36-00	Ultrasonic heat meter 2.5 m3/h, DS M10x1 mm, G 1", 130 mm	N5324	728
UH50-A38-00	Ultrasonic heat meter 2.5 m3/h, DS M10x1 mm, G 1", 190 mm	N5324	728
UH50-A45-00	Ultrasonic heat meter 3.5 m3/h, DS M10x1 mm, G 11/4"	N5324	730
UH50-A50-00	Ultrasonic heat meter 6 m3/h, DS M10x1 mm, G 11/4"	N5324	730
UH50-A61-00	Ultrasonic heat meter 10 m3/h, Ø 6 mm L = 100 mm, DN40	N5324	732
UH50-A65-00	Ultrasonic heat meter 15 m3/h, Ø 6 mm L = 100 mm, DN50	N5324	733
UH50-A70-00	Ultrasonic heat meter 25 m3/h, Ø 6 mm L = 100 mm, DN65	N5324	733
UH50-A74-00	Ultrasonic heat meter 40 m3/h, Ø 6 mm L = 150 mm, DN80	N5324	734
UH50-A83-00	Ultrasonic heat meter 60 m3/h, Ø 6 mm L = 150 mm, DN100	N5324	734
UH50-C05-00	Ultrasonic heat and heating/cooling meter 0.6 m3/h, DS M10x1 mm, G 3/4"	N5324	728
UH50-C06-00	Ultrasonic heating/cooling energy meter 0.6 m3/h, DS M10x1 mm, G 3/4", PN 25	N5324	728
UH50-C21-00	Ultrasonic heat and heating/cooling meter 1.5 m3/h, DS M10x1 mm, G 3/4"	N5324	728
UH50-C22-00	Ultrasonic heating/cooling energy meter 1.5 m3/h, DS M10x1 mm, G 3/4", PN25	N5324	728
UH50-C25-00	Ultrasonic heating/cooling energy meter 1.5 m3/h, DS M10x1 mm, G 1", PN25	N5324	728
UH50-C36-00	Ultrasonic heat and heating/cooling meter 2.5 m3/h, DS M10x1 mm, G 1"	N5324	728
UH50-C37-00	Ultrasonic heating/cooling energy meter 2.5 m3/h, DS M10x1 mm, G 1", PN25	N5324	728
UH50-C40-00	Ultrasonic heating/cooling energy meter 2.5 m3/h, DS M10x1 mm, G 1", PN25	N5324	728
UH50-C45-00	Ultrasonic heat and heating/cooling meter 3.5 m3/h, DS M10x1 mm, G 11/4"	N5324	730
UH50-C47-00	Ultrasonic heating/cooling energy meter 3.5 m3/h, DS M10x1 mm, G 1 ¼ ", PN25	N5324	730
UH50-C50-00	Ultrasonic heat and heating/cooling meter 6 m3/h, DS M10x1 mm, G 11/4"	N5324	730
UH50-C52-00	Ultrasonic heating/cooling energy meter 6.0 m3/h, DN25", PN25	N5324	730
UH50-C60-00	Ultrasonic heating/cooling energy meter 10.0 m3/h, G 2", PN16	N5324	732
UH50-C61-00	Ultrasonic heat and heating/cooling meter 10 m3/h, Ø 6 mm L = 100 mm, DN40	N5324	732
UH50-C65-00	Ultrasonic heat and heating/cooling meter 15 m3/h, Ø 6 mm L = 100 mm, DN50	N5324	733
UH50-C70-00	Ultrasonic heat and heating/cooling meter 25 m3/h, Ø 6 mm L = 100 mm, DN65	N5324	733
UH50-C74-00	Ultrasonic heat and heating/cooling meter 40 m3/h, Ø 6 mm L = 150 mm, DN80	N5324	734
UH50-C83-00	Ultrasonic heat and heating/cooling meter 60 m3/h, Ø 6 mm L = 150 mm, DN100	N5324	734
UP 255D21	Brightness Sensor with constant light level controller	A6V10489482	197
UP 258D12	Presence Detector with brightness sensor	A6V10489482	196
UP 258D31	Presence Detector WIDE with temperature measurement	A6V11895382	194
UP 258D33	Presence Detector WIDE black	A6V14046257	194
UP 258D41	Presence Detector WIDE pro with temperature and relative humidity measurement	A6V11895382	195
UP 258D51	Presence Detector WIDE multi with temperature, humidity and CO2 measurement	A6V11895382	195
UP 258D61	Presence Detector WIDE DualTech with temperature measurement	A6V11895378	196
VAF41.100-160	2-port ball valve, flanged, PN16, DN100, kvs 160	A6V11168935	587
VAF41.100-160/2	2-port ball valve, flanged, PN16, DN100, kvs 160	A6V11168935	587
VAF41.125-250	2-port ball valve, flanged, PN16, DN125, kvs 250	A6V11168935	587

Product no.	Product Title	Data sheet	Page
VAF41.125-250/2	2-port ball valve, flanged, PN16, DN125, kvs 250	A6V11168935	587
VAF41.150-360	2-port ball valve, flanged, PN16, DN150, kvs 360	A6V11168935	587
VAF41.150-360/2	2-port ball valve, flanged, PN16, DN150, kvs 360	A6V11168935	587
VAF41.65-63/1	2-port contol ball valves for flanged connection	A6V11168935	587
VAF41.65-63/2	2-port contol ball valves for flanged connection	A6V11168935	587
VAF41.80-100/1	2-port contol ball valves for flanged connection	A6V11168935	587
VAF41.80-100/2	2-port contol ball valves for flanged connection	A6V11168935	587
VAG60.15-9	2-port open/close ball valve, PN40, DN15, kvs 10	N4214	606
VAG60.20-17	2-port open/close ball valve, PN40, DN20, kvs 17	N4214	606
VAG60.25-22	2-port open/close ball valve, PN40, DN25, kvs 22	N4214	606
VAG60.32-35	2-port open/close ball valve, PN40, DN32, kvs 35	N4214	606
VAG60.40-68	2-port open/close ball valve, PN40, DN40, kvs 68	N4214	606
VAG60.50-96	2-port open/close ball valve, PN40, DN50, kvs 96	N4214	606
VAG61.15-1	2-port ball valve, externally threaded, PN40, DN15, kvs 1.0	N4212	597
VAG61.15-1.6	2-port ball valve, externally threaded, PN40, DN15, kvs 1.6	N4212	597
VAG61.15-2.5	2-port ball valve, externally threaded, PN40, DN15, kvs 2.5	N4212	597
VAG61.15-4	2-port ball valve, externally threaded, PN40, DN15, kvs 4.0	N4212	597
VAG61.15-6.3	2-port ball valve, externally threaded, PN40, DN15, kvs 6.3	N4212	597
VAG61.20-10	2-port ball valve, externally threaded, PN40, DN20, kvs 10	N4212	597
VAG61.20-4	2-port ball valve, externally threaded, PN40, DN20, kvs 4.0	N4212	597
VAG61.20-6.3	2-port ball valve, externally threaded, PN40, DN20, kvs 6.3	N4212	597
VAG61.25-10	2-port ball valve, externally threaded, PN40, DN25, kvs 10	N4212	597
VAG61.25-16	2-port ball valve, externally threaded, PN40, DN25, kvs 16	N4212	597
VAG61.25-6.3	2-port ball valve, externally threaded, PN40, DN25, kvs 6.3	N4212	597
VAG61.32-10	2-port ball valve, externally threaded, PN40, DN32, kvs 10	N4212	597
VAG61.32-16	2-port ball valve, externally threaded, PN40, DN32, kvs 16	N4212	597
VAG61.32-25	2-port ball valve, externally threaded, PN40, DN32, kvs 25	N4212	597
VAG61.40-16	2-port ball valve, externally threaded, PN40, DN40, kvs 16	N4212	597
VAG61.40-25	2-port ball valve, externally threaded, PN40, DN40, kvs 25	N4212	597
VAG61.40-40	2-port ball valve, externally threaded, PN40, DN40, kvs 40	N4212	597
VAG61.50-25	2-port ball valve, externally threaded, PN40, DN50, kvs 25	N4212	597
VAG61.50-40	2-port ball valve, externally threaded, PN40, DN50, kvs 40	N4212	597
VAG61.50-63	2-port ball valve, externally threaded, PN40, DN50, kvs 63	N4212	597
VAI51.15-4	Ball valve 2-Port PN25 DN15 kvs4	A6V12170194	611
VAI51.15-6.3	Ball valve 2-Port PN25 DN15 kvs6.3	A6V12170194	611
VAI51.20-10	Ball valve 2-Port PN25 DN20 kvs10	A6V12170194	611
VAI51.20-6.3	Ball valve 2-Port PN25 DN20 kvs6.3	A6V12170194	611
VAI51.25-10	Ball valve 2-Port PN25 DN25 kvs10	A6V12170194	611
VAI51.25-16	Ball valve 2-Port PN25 DN25 kvs16	A6V12170194	611
VAI51.32-16	Ball valve 2-Port PN25 DN32 kvs16	A6V12170194	611
VAI51.32-25	Ball valve 2-Port PN25 DN32 kvs25	A6V12170194	611
VAI51.40-25	Ball valve 2-Port PN25 DN40 kvs25	A6V12170194	611
VAI51.40-40	Ball valve 2-Port PN25 DN40 kvs40	A6V12170194	611
VAI51.50-40	Ball valve 2-Port PN25 DN50 kvs40	A6V12170194	611
VAI51.50-63	Ball valve 2-Port PN25 DN50 kvs63	A6V12170194	611
VAI60.15-15	2-port ball valve, internally threaded, PN40, DN15, kvs 15	N4213	593
VAI60.20-22	2-port ball valve, internally threaded, PN40, DN20, kvs 22	N4213	593
VAI60.25-22	2-port ball valve, internally threaded, PN40, DN25, kvs 22	N4213	593
VAI60.32-35	2-port ball valve, internally threaded, PN40, DN32, kvs 35	N4213	593
VAI60.40-68	2-port ball valve, internally threaded, PN40, DN40, kvs 68	N4213	593
VAI60.50-96	2-port ball valve, internally threaded, PN40, DN50, kvs 96	N4213	593
VAI61.15-0.25	2-port control ball valves, internal thread, PN40, DN15, kvs 0.25	N4211	589
VAI61.15-0.4	2-port control ball valves, internal thread, PN40, DN15, kvs 0.4	N4211	589
VAI61.15-0.63	2-port control ball valves, internal thread, PN40, DN15, kvs 0.63	N4211	589

New Product

Product no.	Product Title	Data sheet	Page
VAI61.15-1	2-port ball valve, internal thread, PN40, DN15, kvs 1	N4211	589
VAI61.15-1.6	2-port ball valve, internal thread, PN40, DN15, kvs 1.6	N4211	589
VAI61.15-10	2-port ball valve, internal thread, PN40, DN15, kvs 10	N4211	589
VAI61.15-2.5	2-port ball valve, internal thread, PN40, DN15, kvs 2.5	N4211	589
VAI61.15-4	2-port ball valve, internal thread, PN40, DN15, kvs 4	N4211	589
VAI61.15-6.3	2-port ball valve, internal thread, PN40, DN15, kvs 6.3	N4211	589
VAI61.20-10	2-port ball valve, internal thread, PN40, DN20, kvs 10	N4211	589
VAI61.20-4	2-port ball valve, internal thread, PN40, DN20, kvs 4	N4211	589
VAI61.20-6.3	2-port ball valve, internal thread, PN40, DN20, kvs 6.3	N4211	589
VAI61.25-10	2-port ball valve, internal thread, PN40, DN25, kvs 10	N4211	589
VAI61.25-16	2-port ball valve, internal thread, PN40, DN25, kvs 16	N4211	589
VAI61.25-6.3	2-port ball valve, internal thread, PN40, DN25, kvs 6.3	N4211	589
VAI61.32-10	2-port ball valve, internal thread, PN40, DN32, kvs 10	N4211	589
VAI61.32-16	2-port ball valve, internal thread, PN40, DN32, kvs 16	N4211	589
VAI61.32-25	2-port ball valve, internal thread, PN40, DN32, kvs 25	N4211	589
VAI61.40-16	2-port ball valve, internal thread, PN40, DN40, kvs 16	N4211	589
VAI61.40-25	2-port ball valve, internal thread, PN40, DN40, kvs 25	N4211	589
VAI61.40-40	2-port ball valve, internal thread, PN40, DN40, kvs 40	N4211	589
VAI61.50-25	2-port ball valve, internal thread, PN40, DN50, kvs 25	N4211	589
VAI61.50-40	2-port ball valve, internal thread, PN40, DN50, kvs 40	N4211	589
VAI61.50-63	2-port ball valve, internal thread, PN40, DN50, kvs 63	N4211	589
VBF21.100	3-port slipper valve, flanged, PN6, DN100, kvs 160	N4241	614
VBF21.125	3-port slipper valve, flanged, PN6, DN125, kvs 550	N4241	614
VBF21.150	3-port slipper valve, flanged, PN6, DN150, kvs 820	N4241	614
VBF21.40	3-port slipper valve, flanged, PN6, DN40, kvs 25	N4241	614
VBF21.50	3-port slipper valve, flanged, PN6, DN50, kvs 40	N4241	614
VBF21.65	3-port slipper valve, flanged, PN6, DN65, kvs 63	N4241	614
VBF21.80	3-port slipper valve, flanged, PN6, DN80, kvs 100	N4241	614
VBG60.15-5L	3-port changeover ball valves, PN 40, DN15, kvs 5	A6V11974394	609
VBG60.15-8T	3-port changeover ball valve, PN40, DN15, kvs 8	N4214	608
VBG60.20-13T	3-port changeover ball valve, PN40, DN20, kvs 13	N4214	608
VBG60.20-8L	3-port changeover ball valves, externally threaded, PN40, DN20, kvs 8	A6V11974394	609
VBG60.25-13T	3-port changeover ball valve, PN40, DN25, kvs 13	N4214	608
VBG60.25-9L	3-port changeover ball valves, PN 40, DN25, kvs 9	A6V11974394	609
VBG60.32-13L	3-port changeover ball valve, PN40, DN32, kvs 13	A6V11974394	609
VBG60.32-25T	3-port changeover ball valve, PN40, DN32, kvs 25	N4214	608
VBG60.40-25L	3-port changeover ball valve, PN40, DN40, kvs 25	A6V11974394	609
VBG60.40-49T	3-port changeover ball valve, PN40, DN40, kvs 49	N4214	608
VBG60.50-37L	3-port changeover ball valve, PN40, DN50, kvs 37	A6V11974394	609
VBG60.50-73T	3-port changeover ball valve, PN40, DN50, kvs 73	N4214	608
VBG61.15-1.6	3-port ball valve, externally threaded, PN40, DN15, kvs 1.6	N4212	600
VBG61.15-2.5	3-port ball valve, externally threaded, PN40, DN15, kvs 2.5	N4212	600
VBG61.15-4	3-port ball valve, externally threaded, PN40, DN15, kvs 4.0	N4212	600
VBG61.15-6.3	3-port ball valve, externally threaded, PN40, DN15, kvs 6.3	N4212	600
VBG61.20-4	3-port ball valve, externally threaded, PN40, DN20, kvs 4.0	N4212	600
VBG61.20-6.3	3-port ball valve, externally threaded, PN40, DN20, kvs 6.3	N4212	600
VBG61.25-10	3-port ball valve, externally threaded, PN40, DN25, kvs 10	N4212	600
VBG61.32-16	3-port ball valve, externally threaded, PN40, DN32, kvs 16	N4212	600
VBG61.40-25	3-port ball valve, externally threaded, PN40, DN40, kvs 25	N4212	600
VBG61.50-40	3-port ball valve, externally threaded, PN40, DN50, kvs 40	N4212	600
VBI60.15-12T	Changeover ball valve, 3-port, PN40, DN15, kvs 12	N4213	595
VBI60.15-5L	Changeover ball valve, 3-port, PN40, DN15, kvs 5	N4213	595
VBI60.20-16T	Changeover ball valve, 3-port, PN40, DN20, kvs 16	N4213	595
VBI60.20-9L	Changeover ball valve, 3-port, PN40, DN20, kvs 9	N4213	595

Product no.	Product Title	Data sheet	Page
VBI60.25-16T	Changeover ball valve, 3-port, PN40, DN25, kvs 16	N4213	595
VBI60.25-9L	Changeover ball valve, 3-port, PN40, DN25, kvs 9	N4213	595
VBI60.32-13L	Changeover ball valve, 3-port, PN40, DN32, kvs 13	N4213	595
VBI60.32-25T	Changeover ball valve, 3-port, PN40, DN32, kvs 25	N4213	595
VBI60.40-25L	Changeover ball valve, 3-port, PN40, DN40, kvs 25	N4213	595
VBI60.40-49T	Changeover ball valve, 3-port, PN40, DN40, kvs 49	N4213	595
VBI60.50-37L	Changeover ball valve, 3-port, PN40, DN50, kvs 37	N4213	595
VBI60.50-73T	Changeover ball valve, 3-port, PN40, DN50, kvs 73	N4213	595
VBI61.15-1.6	3-port ball valve, internal thread, PN40, DN15, kvs 1.6	N4211	591
VBI61.15-2.5	3-port ball valve, internal thread, PN40, DN15, kvs 2.5	N4211	591
VBI61.15-4	3-port ball valve, internal thread, PN40, DN15, kvs 4	N4211	591
VBI61.15-6.3	3-port ball valve, internal thread, PN40, DN15, kvs 6.3	N4211	591
VBI61.20-4	3-port ball valve, internal thread, PN40, DN20, kvs 4	N4211	591
VBI61.20-6.3	3-port ball valve, internal thread, PN40, DN20, kvs 6.3	N4211	591
VBI61.25-10	3-port ball valve, internal thread, PN40, DN25, kvs 10	N4211	591
VBI61.32-16	3-port ball valve, internal thread, PN40, DN32, kvs 16	N4211	591
VBI61.40-25	3-port ball valve, internal thread, PN40, DN40, kvs 25	N4211	591
VBI61.50-40	3-port ball valve, internal thread, PN40, DN50, kvs 40	N4211	591
VBI61.50-63	3-port ball valve, internal thread, PN40, DN50, kvs 63	N4211	591
VD115CLC	2-port small valve, DIN, DN15, kv 0.25...1.9	N2103	488
VD120CLC	2-port small valve, DIN, DN20, kv 0.25...2.6	N2103	488
VD125CLC	2-port small valve, DIN, DN25, kv 0.25...2.6	N2103	488
VDN110	2-port radiator valve, DIN, 2-pipe system, PN10, DN10, kvs 0.09...0.63	N2105	482
VDN115	2-port radiator valve, DIN, 2-pipe system, PN10, DN15, kvs 0.10...0.89	N2105	482
VDN120	2-port radiator valve, DIN, 2-pipe system, PN10, DN20, kvs 0.31...1.41	N2105	482
VDN210	2-port radiator valve, NF, 2-pipe system, PN10, DN10, kvs 0.09...0.63	N2106	484
VDN215	2-port radiator valve, NF, 2-pipe system, PN10, DN15, kvs 0.10...0.89	N2106	484
VDN220	2-port radiator valve, NF, 2-pipe system, PN10, DN20, kvs 0.31...1.41	N2106	484
VEN110	Angle radiator valve, DIN, 2-pipe system, PN10, DN10, kv 0.09...0.63	N2105	482
VEN115	Angle radiator valve, DIN, 2-pipe system, PN10, DN15, kv 0.10...0.89	N2105	482
VEN120	Angle radiator valve, DIN, 2-pipe system, PN10, DN20, kv 0.31...1.41	N2105	482
VEN210	Angle radiator valve, NF, 2-pipe system, PN10, DN10, kvs 0.09...0.63	N2106	484
VEN215	Angle radiator valve, NF, 2-pipe system, PN10, DN15, kvs 0.10...0.89	N2106	484
VEN220	Angle radiator valve, NF, 2-pipe system, PN10, DN20, kvs 0.31...1.41	N2106	484
VFL41.100	Butterfly Valve, flange, PN 6/10/16, DN100, kvs 520, tight closing	A6V101029242	620
VFL41.125	Butterfly Valve, flange, PN 6/10/16, DN125, kvs 820, tight closing	A6V101029242	620
VFL41.150	Butterfly Valve, flange, PN 6/10/16, DN150, kvs 1600, tight closing	A6V101029242	620
VFL41.200	Butterfly Valve, flange, PN 16, DN200, kvs 4000, tight closing	A6V101029242	620
VFL41.250	Butterfly Valve, flange, PN 16, DN250, kvs 4550, tight closing	A6V101029242	620
VFL41.300	Butterfly Valve, flange, PN 16, DN300, kvs 7200, tight closing	A6V101029242	620
VFL41.350	Butterfly Valve, flange, PN 16, DN350, kvs 10250, tight closing	A6V101029242	620
VFL41.40	Butterfly Valve, flange, PN 6/10/16, DN40, kvs 40, tight closing	A6V101029242	620
VFL41.400	Butterfly Valve, flange, PN 16, DN400, kvs 14100, tight closing	A6V101029242	620
VFL41.450	Butterfly Valve, flange, PN 16, DN450, kvs 18500, tight closing	A6V101029242	620
VFL41.50	Butterfly Valve, flange, PN 6/10/16, DN50, kvs 100, tight closing	A6V101029242	620
VFL41.500	Butterfly Valve, flange, PN 16, DN500, kvs 24000, tight closing	A6V101029242	620
VFL41.600	Butterfly Valve, flange, PN 16, DN600, kvs 31000, tight closing	A6V101029242	620
VFL41.65	Butterfly Valve, flange, PN 6/10/16, DN65, kvs 155, tight closing	A6V101029242	620
VFL41.80	Butterfly Valve, flange, PN 6/10/16, DN80, kvs 260, tight closing	A6V101029242	620
VFW41.100	Butterfly Valve, flange, PN 6/10/16, DN100, kvs 520, tight closing	A6V101029242	617
VFW41.100U	Butterfly Valve, flange, PN 10/16, DN100, kvs 520	A6V101029254	619
VFW41.125	Butterfly Valve, flange, PN 6/10/16, DN125, kvs 820, tight closing	A6V101029242	617
VFW41.125U	Butterfly Valve, flange, PN 10/16, DN125, kvs 820	A6V101029254	619
VFW41.150	Butterfly Valve, flange, PN 6/10/16, DN150, kvs 1600, tight closing	A6V101029242	617

New Product

Product no.	Product Title	Data sheet	Page
VFW41.150U	Butterfly Valve, flange, PN 10/16, DN150, kvs 1600	A6V101029254	619
VFW41.200	Butterfly Valve, flange, PN 6/10/16, DN200, kvs 4000, tight closing	A6V101029242	617
VFW41.200U	Butterfly Valve, flange, PN 10/16, DN200, kvs 4000	A6V101029254	619
VFW41.250	Butterfly Valve, flange, PN 6/10/16, DN250, kvs 4550, tight closing	A6V101029242	617
VFW41.300	Butterfly Valve, flange, PN 6/10/16, DN300, kvs 7200, tight closing	A6V101029242	617
VFW41.350	Butterfly Valve, flange, PN 6/10/16, DN350, kvs 10250, tight closing	A6V101029242	617
VFW41.40	Butterfly Valve, flange, PN 6/10/16, DN40, kvs 40, tight closing	A6V101029242	617
VFW41.400	Butterfly Valve, flange, PN 6/10/16, DN400, kvs 14100, tight closing	A6V101029242	617
VFW41.40U	Butterfly Valve, flange, PN 10/16, DN40, kvs 40	A6V101029254	619
VFW41.450	Butterfly Valve, flange, PN 6/10/16, DN450, kvs 18500, tight closing	A6V101029242	617
VFW41.50	Butterfly Valve, flange, PN 6/10/16, DN50, kvs 100, tight closing	A6V101029242	617
VFW41.500	Butterfly Valve, flange, PN 10/16, DN500, kvs 24000, tight closing	A6V101029242	617
VFW41.50U	Butterfly Valve, flange, PN 10/16, DN50, kvs 100	A6V101029254	619
VFW41.600	Butterfly Valve, flange, PN 16, DN600, kvs 31000, tight closing	A6V101029242	617
VFW41.65	Butterfly Valve, flange, PN 6/10/16, DN65, kvs 155, tight closing	A6V101029242	617
VFW41.65U	Butterfly Valve, flange, PN 10/16, DN65, kvs 155	A6V101029254	619
VFW41.80	Butterfly Valve, flange, PN 6/10/16, DN80, kvs 260, tight closing	A6V101029242	617
VFW41.80U	Butterfly Valve, flange, PN 10/16, DN80, kvs 260	A6V101029254	619
VKF42.100	Butterfly valves PN16 for flanged connections, with tight shutoff	N4119	615
VKF42.125	Butterfly valves PN16 for flanged connections, with tight shutoff	N4119	615
VKF42.150	Butterfly valves PN16 for flanged connections, with tight shutoff	N4119	615
VKF42.200	Butterfly valves PN16 for flanged connections, with tight shutoff	N4119	615
VKF42.250	Butterfly valves PN16 for flanged connections, with tight shutoff	N4119	615
VKF42.300	Butterfly valves PN16 for flanged connections, with tight shutoff	N4119	615
VKF42.350	Butterfly valves PN16 for flanged connections, with tight shutoff	N4119	615
VKF42.400	Butterfly valves PN16 for flanged connections, with tight shutoff	N4119	615
VKF42.450	Butterfly valves PN16 for flanged connections, with tight shutoff	N4119	615
VKF42.50	Butterfly valves PN16 for flanged connections, with tight shutoff	N4119	615
VKF42.500	Butterfly valves PN16 for flanged connections, with tight shutoff	N4119	615
VKF42.600	Butterfly valves PN16 for flanged connections, with tight shutoff	N4119	615
VKF42.65	Butterfly valves PN16 for flanged connections, with tight shutoff	N4119	615
VKF42.80	Butterfly valves PN16 for flanged connections, with tight shutoff	N4119	615
VMP45.10-0.25	3-port seat valve with bypass, external thread, PN16, DN10, kvs 0.25	N4845	528
VMP45.10-0.4	3-port seat valve with bypass, external thread, PN16, DN10, kvs 0.4	N4845	528
VMP45.10-0.63	3-port seat valve with bypass, external thread, PN16, DN10, kvs 0.63	N4845	528
VMP45.10-1	3-port seat valve with bypass, external thread, PN16, DN10, kvs 1	N4845	528
VMP45.10-1.6	3-port seat valve with bypass, external thread, PN16, DN10, kvs 1.6	N4845	528
VMP45.15-2.5	3-port seat valve with bypass, external thread, PN16, DN15, kvs 2.5	N4845	528
VMP45.20-4	3-port seat valve with bypass, external thread, PN16, DN20, kvs 4	N4845	528
VMP47.10-0.25	3-port seat valve with bypass, external thread, PN16, DN10, kvs 0.25	N4847	530
VMP47.10-0.4	3-port seat valve with bypass, external thread, PN16, DN10, kvs 0.4	N4847	530
VMP47.10-0.63	3-port seat valve with bypass, external thread, PN16, DN10, kvs 0.63	N4847	530
VMP47.10-0.63S	3-port seat valves with T-bypass, external thread, PN16, DN10, kvs 0.63	N4847	530
VMP47.10-1	3-port seat valve with bypass, external thread, PN16, DN10, kvs 1	N4847	530
VMP47.10-1.6	3-port seat valve with bypass, external thread, PN16, DN10, kvs 1.6	N4847	530
VMP47.15-2.5	3-port seat valve with bypass, external thread, PN16, DN15, kvs 2.5	N4847	530
VMP47.15-2.5S	3-port seat valves with bypass, external thread, PN16, DN15, kvs 2.5	N4847	530
VPD110A-135	Straightway Radiator PICV	A6V13089932	563
VPD110A-45	2-port seat radiator valve, DIN, pressure compensated, dpw 5 kPa, PN10, DN10, 25...104 l/h	N2185	560
VPD110A-90	2-port seat radiator valve, DIN, pressure compensated, dpw 5 kPa, PN10, DN10, 57...185 l/h	N2185	560
VPD115A-135	Straightway Radiator PICV	A6V13089932	563
VPD120A-135	Straightway Radiator PICV	A6V13089932	563

Product no.	Product Title	Data sheet	Page
VPD210A-135	Straightway Radiator PICV	A6V13089932	563
VPD215A-135	Straightway Radiator PICV	A6V13089932	563
VPD220A-135	Straightway Radiator PICV	A6V13089932	563
VPE110A-135	Angle Radiator PICV, DN10, DIN	A6V13089932	564
VPE115A-135	Angle Radiator PICV	A6V13089932	564
VPE115A-145	Angle radiator valve, DIN, pressure-compensated, dpw 5 kPa, PN10, DN15, 86....318 l/h	N2185	561
VPE115A-45	Angle radiator valve, DIN, pressure-compensated, dpw 5 kPa, PN10, DN15, 25....104 l/h	N2185	561
VPE115A-90	Angle radiator valve, DIN, pressure-compensated, dpw 5 kPa, PN10, DN15, 57....185 l/h	N2185	561
VPE120A-135	Angle Radiator PICV	A6V13089932	564
VPE210A-135	Angle Radiator PICV	A6V13089932	564
VPE215A-135	Angle Radiator PICV	A6V13089932	564
VPE220A-135	Angle Radiator PICV	A6V13089932	564
VPF43.125F110	Pressure independent control valve (PICV), PN16, DN125, with flanged connections		548
VPF43.125F110/1	Pressure independent control valve (PICV), PN16, DN125, with flanged connections	A6V11213406	549
VPF43.125F135	Pressure independent control valve (PICV), PN16, DN125, with flanged connections		548
VPF43.125F135/1	Pressure independent control valve (PICV), PN16, DN125, with flanged connections	A6V11213406	549
VPF43.150F160	Pressure independent control valve (PICV), PN16, DN150, with flanged connections		548
VPF43.150F160/1	Pressure independent control valve (PICV), PN16, DN150, with flanged connections	A6V11213406	549
VPF43.150F200	Pressure independent control valve (PICV), PN16, DN150, with flanged connections		548
VPF43.150F200/1	Pressure independent control valve (PICV), PN16, DN150, with flanged connections	A6V11213406	549
VPF43.200F210	Pressure independent control valve (PICV), PN16, DN200, with flanged connections		548
VPF43.200F280	Pressure independent control valve (PICV), PN16, DN200, with flanged connections		548
VPF44.100F70	Pressure independent control valve (PICV), PN16, DN100, with flanged connections	A6V12273951	551
VPF44.100F90	Pressure independent control valve (PICV), PN16, DN100, with flanged connections	A6V12273951	551
VPF44.125F110	Pressure independent control valve (PICV), PN16, DN125, with flanged connections	A6V12273951	551
VPF44.125F135	Pressure independent control valve (PICV), PN16, DN125, with flanged connections	A6V12273951	551
VPF44.150F150	Pressure independent control valve (PICV), PN16, DN150, with flanged connections	A6V12273951	551
VPF44.150F200	Pressure independent control valve (PICV), PN16, DN150, with flanged connections	A6V12273951	551
VPF44.50F15	Pressure independent control valve (PICV), PN16, DN50, with flanged connections	A6V12273951	551
VPF44.50F25	Pressure independent control valve (PICV), PN16, DN50, with flanged connections	A6V12273951	551
VPF44.65F25	Pressure independent control valve (PICV), PN16, DN65, with flanged connections	A6V12273951	551
VPF44.65F35	Pressure independent control valve (PICV), PN16, DN65, with flanged connections	A6V12273951	551
VPF44.80F35	Pressure independent control valve (PICV), PN16, DN80, with flanged connections	A6V12273951	551
VPF44.80F45	Pressure independent control valve (PICV), PN16, DN80, with flanged connections	A6V12273951	551
VPF53.125F110	Pressure independent control valve (PICV), PN25, DN125, with flanged connections		553
VPF53.125F135	Pressure independent control valve (PICV), PN25, DN125, with flanged connections		553
VPF53.150F160	Pressure independent control valve (PICV), PN25, DN150, with flanged connections		553
VPF53.150F200	Pressure independent control valve (PICV), PN25, DN150, with flanged connections		553
VPF53.200F210	Pressure independent control valve (PICV), PN25, DN200, with flanged connections		553
VPF53.200F280	Pressure independent control valve (PICV), PN25, DN200, with flanged connections		553
VPF54.100F70	Pressure independent control valve (PICV), PN25, DN100, with flanged connections	A6V12273951	554
VPF54.100F90	Pressure independent control valve (PICV), PN25, DN100, with flanged connections	A6V12273951	554
VPF54.125F110	Pressure independent control valve (PICV), PN25, DN125, with flanged connections	A6V12273951	554
VPF54.125F135	Pressure independent control valve (PICV), PN25, DN125, with flanged connections	A6V12273951	554
VPF54.150F150	Pressure independent control valve (PICV), PN25, DN150, with flanged connections	A6V12273951	554
VPF54.150F200	Pressure independent control valve (PICV), PN25, DN150, with flanged connections	A6V12273951	554
VPF54.50F15	Pressure independent control valve (PICV), PN25, DN50, with flanged connections	A6V12273951	554
VPF54.50F25	Pressure independent control valve (PICV), PN25, DN50, with flanged connections	A6V12273951	554
VPF54.65F25	Pressure independent control valve (PICV), PN25, DN65, with flanged connections	A6V12273951	554
VPF54.65F35	Pressure independent control valve (PICV), PN25, DN65, with flanged connections	A6V12273951	554
VPF54.80F35	Pressure independent control valve (PICV), PN25, DN80, with flanged connections	A6V12273951	554

New Product

Product no.	Product Title	Data sheet	Page
VPF54.80F45	Pressure independent control valve (PICV), PN25, DN80, with flanged connections	A6V12273951	554
VPI46.15L0.2	Combi valves, PN25, DN15, 30...200 l/h	N4855	568
VPI46.15L0.2Q	Combi valves, PN25, DN15, 30...200 l/h, pressure test points	N4855	568
VPI46.15L0.6	Combi valves, PN25, DN15, 100...575 l/h	N4855	568
VPI46.15L0.6Q	Combi valves, PN25, DN15, 100...575 l/h, pressure test points	N4855	568
VPI46.20F1.4	Combi valves, PN25, DN20, 220...1330 l/h	N4855	568
VPI46.20F1.4Q	Combi valves, PN25, DN20, 220...1330 l/h, pressure test points	N4855	568
VPI46.25F1.8	Combi valves, PN25, DN25, 280...1800 l/h	N4855	568
VPI46.25F1.8Q	Combi valves, PN25, DN25, 280...1800 l/h, pressure test points	N4855	568
VPI46.32F4	Combi valves, PN25, DN32, 550...4000 l/h	N4855	568
VPI46.32F4Q	Combi valves, PN25, DN32, 550...4000 l/h, pressure test points	N4855	568
VPI46.40F9.5Q	Combi valves, PN25, DN40, 1370...9500 l/h, pressure test points	N4855	568
VPI46.50F12Q	Combi valves, PN25, DN50, 1400...11500 l/h, pressure test points	N4855	568
VPP46.10L0.2	Combi valves, PN25, DN10, 30...200 l/h	N4855	566
VPP46.10L0.2Q	Combi valves, PN25, DN10, 30...200 l/h, pressure test points	N4855	566
VPP46.10L0.4	Combi valves, PN25, DN10, 65...370 l/h	N4855	566
VPP46.10L0.4Q	Combi valves, PN25, DN10, 65...370 l/h, pressure test points	N4855	566
VPP46.15L0.2	Combi valves, PN25, DN15, 30...200 l/h	N4855	566
VPP46.15L0.2Q	Combi valves, PN25, DN15, 30...200 l/h, pressure test points	N4855	566
VPP46.15L0.6	Combi valves, PN25, DN15, 100...575 l/h	N4855	566
VPP46.15L0.6Q	Combi valves, PN25, DN15, 100...575 l/h, pressure test points	N4855	566
VPP46.20F1.4	Combi valves, PN25, DN20, 220...1330 l/h	N4855	566
VPP46.20F1.4Q	Combi valves, PN25, DN20, 220...1330 l/h, pressure test points	N4855	566
VPP46.25F1.8	Combi valves, PN25, DN25, 280...1800 l/h	N4855	566
VPP46.25F1.8Q	Combi valves, PN25, DN25, 280...1800 l/h, pressure test points	N4855	566
VPP46.32F4	Combi valves, PN25, DN32, 550...4000 l/h	N4855	566
VPP46.32F4Q	Combi valves, PN25, DN32, 550...4000 l/h, pressure test points	N4855	566
VPU110A-135	Axial Radiator PICV	A6V13089932	565
VPU115A-135	Axial Radiator PICV	A6V13089932	565
VQI46.15F1.3	PICV, internally threaded, PN 25, DN 15, 300....1300 l/h	A6V11877580	573
VQI46.15F1.3Q	PICV, internally threaded, PN 25, DN 15, 300....1300 l/h, pressure test points	A6V11877580	573
VQI46.15L0.5	PICV, internally threaded, PN 25, DN 15, 30...520 l/h	A6V11877580	573
VQI46.15L0.5Q	PICV, internally threaded, PN 25, DN 15, 30...520 l/h, pressure test points	A6V11877580	573
VQI46.20F1.5	PICV, internally threaded, PN 25, DN 20, 320....1500 l/h	A6V11877580	573
VQI46.20F1.5Q	PICV, internally threaded, PN 25, DN 20, 320....1500 l/h, pressure test points	A6V11877580	573
VQI46.25F1.8	PICV, internally threaded, PN 25, DN 25, 620....1800 l/h	A6V11877580	573
VQI46.25F1.8Q	PICV, internally threaded, PN 25, DN 25, 620....1800 l/h, pressure test points	A6V11877580	573
VQP46.10L0.5	PICV, externally threaded, PN 25, DN 10, 30...520 l/h	A6V11877580	571
VQP46.10L0.5Q	PICV, externally threaded, PN 25, DN 10, 30...520 l/h, pressure test points	A6V11877580	571
VQP46.15F1.3	PICV, externally threaded, PN 25, DN 15, 300....1300 l/h	A6V11877580	571
VQP46.15F1.3Q	PICV, externally threaded, PN 25, DN 15, 300....1300 l/h, pressure test points	A6V11877580	571
VQP46.15L0.5	PICV, externally threaded, PN 25, DN 15, 30...520 l/h	A6V11877580	571
VQP46.15L0.5Q	PICV, externally threaded, PN 25, DN 15, 30...520 l/h, pressure test points	A6V11877580	571
VQP46.20F1.5	PICV, externally threaded, PN 25, DN 20, 320....1500 l/h	A6V11877580	571
VQP46.20F1.5Q	PICV, externally threaded, PN 25, DN 20, 320....1500 l/h, pressure test points	A6V11877580	571
VQP46.25F1.8	PICV, externally threaded, PN 25, DN 25, 620....1800 l/h	A6V11877580	571
VQP46.25F1.8Q	PICV, externally threaded, PN 25, DN 25, 620....1800 l/h, pressure test points	A6V11877580	571
VUN210	Reverse angle radiator valve, NF, 2-pipe system, PN10, DN10, kvs 0.14...0.60	N2106	485
VUN215	Reverse angle radiator valve, NF, 2-pipe system, PN10, DN15, kvs 0.13...0.77	N2106	485
VVF22.100-160	2-port valve, flanged, PN6, DN100, kvs 160	N4401	454
VVF22.25-10	2-port valve, flanged, PN6, DN25, kvs 10	N4401	454
VVF22.25-2.5	2-port valve, flanged, PN6, DN25, kvs 2.5	N4401	454
VVF22.25-4	2-port valve, flanged, PN6, DN25, kvs 4	N4401	454
VVF22.25-6.3	2-port valve, flanged, PN6, DN25, kvs 6.3	N4401	454

Product no.	Product Title	Data sheet	Page
VVF22.40-16	2-port valve, flanged, PN6, DN40, kvs 16	N4401	454
VVF22.40-25	2-port valve, flanged, PN6, DN40, kvs 25	N4401	454
VVF22.50-40	2-port valve, flanged, PN6, DN50, kvs 40	N4401	454
VVF22.65-63	2-port valve, flanged, PN6, DN65, kvs 63	N4401	454
VVF22.80-100	2-port valve, flanged, PN6, DN80, kvs 100	N4401	454
VVF32.100-160	2-port valve, flanged, PN10, DN100, kvs 160	N4402	456
VVF32.125-250	2-port valve, flanged, PN10, DN125, kvs 250	N4402	456
VVF32.150-400	2-port valve, flanged, PN10, DN150, kvs 400	N4402	456
VVF32.15-1.6	2-port valve, flanged, PN10, DN15, kvs 1.6	N4402	456
VVF32.15-2.5	2-port valve, flanged, PN10, DN15, kvs 2.5	N4402	456
VVF32.15-4	2-port valve, flanged, PN10, DN15, kvs 4	N4402	456
VVF32.25-10	2-port valve, flanged, PN10, DN25, kvs 10	N4402	456
VVF32.25-6.3	2-port valve, flanged, PN10, DN25, kvs 6.3	N4402	456
VVF32.40-16	2-port valve, flanged, PN10, DN40, kvs 16	N4402	456
VVF32.40-25	2-port valve, flanged, PN10, DN40, kvs 25	N4402	456
VVF32.50-40	2-port valve, flanged, PN10, DN50, kvs 40	N4402	456
VVF32.65-63	2-port valve, flanged, PN10, DN65, kvs 63	N4402	456
VVF32.80-100	2-port valve, flanged, PN10, DN80, kvs 100	N4402	456
VVF42.100-125	2-port valve, flanged, PN16, DN100, kvs 125	N4403	458
VVF42.100-125C	2-port valve, flanged, PN16, DN100, kvs 125, for Asian market	A6V10794157	461
VVF42.100-160	2-port valve, flanged, PN16, DN100, kvs 160	N4403	458
VVF42.100-160C	2-port valve, flanged, PN16, DN100, kvs 160, for Asian market	A6V10794157	461
VVF42.100-160K	2-port valve, flanged, DN100, kvs 160, pressure compensated	N4403	464
VVF42.100KC	2-port valve, flanged, DN100, pressure compensated	A6V10794157	466
VVF42.125-200	2-port valve, flanged, PN16, DN125, kvs 200	N4403	458
VVF42.125-200C	2-port valve, flanged, PN16, DN125, kvs 200, for Asian market	A6V10794157	461
VVF42.125-250	2-port valve, flanged, PN16, DN125, kvs 250	N4403	458
VVF42.125-250C	2-port valve, flanged, PN16, DN125, kvs 250, for Asian market	A6V10794157	461
VVF42.125-250K	2-port valve, flanged, DN125, kvs 250, pressure compensated	N4403	464
VVF42.125KC	2-port valve, flanged, DN125, pressure compensated	A6V10794157	466
VVF42.150-315	2-port valve, flanged, PN16, DN150, kvs 315	N4403	458
VVF42.150-315C	2-port valve, flanged, PN16, DN150, kvs 315, for Asian market	A6V10794157	461
VVF42.150-360K	2-port valve, flanged, DN150, kvs 360, pressure compensated	N4403	464
VVF42.150-400	2-port valve, flanged, PN16, DN150, kvs 400	N4403	458
VVF42.150-400C	2-port valve, flanged, PN16, DN150, kvs 400, for Asian market	A6V10794157	461
VVF42.150KC	2-port valve, flanged, DN150, pressure compensated	A6V10794157	466
VVF42.15-1.6	2-port valve, flanged, PN16, DN15, kvs 1.6	N4403	458
VVF42.15-2.5	2-port valve, flanged, PN16, DN15, kvs 2.5	N4403	458
VVF42.15-4	2-port valve, flanged, PN16, DN15, kvs 4	N4403	458
VVF42.20-6.3	2-port valve, flanged, PN16, DN20, kvs 6.3	N4403	458
VVF42.25-10	2-port valve, flanged, PN16, DN25, kvs 10	N4403	458
VVF42.25-10C	2-port valve, flanged, PN16, DN25, kvs 10, for Asian market	A6V10794157	461
VVF42.25-6.3	2-port valve, flanged, PN16, DN25, kvs 6.3	N4403	458
VVF42.25-6.3C	2-port valve, flanged, PN16, DN25, kvs 6.3, for Asian market	A6V10794157	461
VVF42.32-16	2-port valve, flanged, PN16, DN32, kvs 16	N4403	458
VVF42.32-16C	2-port valve, flanged, PN16, DN32, kvs 16, for Asian market	A6V10794157	461
VVF42.40-16	2-port valve, flanged, PN16, DN40, kvs 16	N4403	458
VVF42.40-16C	2-port valve, flanged, PN16, DN40, kvs 16, for Asian market	A6V10794157	461
VVF42.40-25	2-port valve, flanged, PN16, DN40, kvs 25	N4403	458
VVF42.40-25C	2-port valve, flanged, PN16, DN40, kvs 25, for Asian market	A6V10794157	461
VVF42.50-31.5	2-port valve, flanged, PN16, DN50, kvs 31.5	N4403	458
VVF42.50-31.5C	2-port valve, flanged, PN16, DN50, kvs 31.5, for Asian market	A6V10794157	461
VVF42.50-40	2-port valve, flanged, PN16, DN50, kvs 40	N4403	458
VVF42.50-40C	2-port valve, flanged, PN16, DN50, kvs 40, for Asian market	A6V10794157	461

New Product

Product no.	Product Title	Data sheet	Page
VVF42.50-40K	2-port valve, flanged, DN50, kvs 40, pressure compensated	N4403	464
VVF42.65-50	2-port valve, flanged, PN16, DN65, kvs 50	N4403	458
VVF42.65-50C	2-port valve, flanged, PN16, DN65, kvs 50, for Asian market	A6V10794157	461
VVF42.65-63	2-port valve, flanged, PN16, DN65, kvs 63	N4403	458
VVF42.65-63C	2-port valve, flanged, PN16, DN65, kvs 63, for Asian market	A6V10794157	461
VVF42.65-63K	2-port valve, flanged, DN65, kvs 63, pressure compensated	N4403	464
VVF42.65KC	2-port valve, flanged, DN65, pressure compensated	A6V10794157	466
VVF42.80-100	2-port valve, flanged, PN16, DN80, kvs 100	N4403	458
VVF42.80-100C	2-port valve, flanged, PN16, DN80, kvs 100, for Asian market	A6V10794157	461
VVF42.80-100K	2-port valve, flanged, DN80, kvs 100, pressure compensated	N4403	464
VVF42.80-80	2-port valve, flanged, PN16, DN80, kvs 80	N4403	458
VVF42.80-80C	2-port valve, flanged, PN16, DN80, kvs 80, for Asian market	A6V10794157	461
VVF42.80KC	2-port valve, flanged, DN80, pressure compensated	A6V10794157	466
VVF43.100-125	2-port seat valve, flanged, PN16, DN100, kvs 125	N4404	469
VVF43.100-150K	2-port seat valve, flanged, PN16, DN100, kvs 150, pressure compensated	N4404	471
VVF43.100-160	2-port seat valve, flanged, PN16, DN100, kvs 160	N4404	469
VVF43.125-200	2-port seat valve, flanged, PN16, DN125, kvs 200	N4404	469
VVF43.125-220K	2-port seat valve, flanged, PN16, DN125, kvs 220, pressure compensated	N4404	471
VVF43.125-250	2-port seat valve, flanged, PN16, DN125, kvs 250	N4404	469
VVF43.150-315	2-port seat valve, flanged, PN16, DN150, kvs 315	N4404	469
VVF43.150-315K	2-port seat valve, flanged, PN16, DN150, kvs 315, pressure compensated	N4404	471
VVF43.150-400	2-port seat valve, flanged, PN16, DN150, kvs 400	N4404	469
VVF43.200-450K	2-port seat valve, flanged, PN16, DN200, kvs 450, pressure compensated	N4404	471
VVF43.250-630K	2-port seat valve, flanged, PN16, DN250, kvs 630, pressure compensated	N4404	471
VVF43.65-50	2-port seat valve, flanged, PN16, DN65, kvs 50	N4404	469
VVF43.65-63	2-port seat valve, flanged, PN16, DN65, kvs 63	N4404	469
VVF43.65-63K	2-port seat valve, flanged, PN16, DN65, kvs 63, pressure compensated	N4404	471
VVF43.80-100	2-port seat valve, flanged, PN16, DN80, kvs 100	N4404	469
VVF43.80-100K	2-port seat valve, flanged, PN16, DN80, kvs 100, pressure compensated	N4404	471
VVF43.80-80	2-port seat valve, flanged, PN16, DN80, kvs 80	N4404	469
VVF47.100	2-port seat valve VVF47.100, DN100, kvs 160	N4419	472
VVF47.125	2-port seat valve VVF47.125, DN125, kvs 250	N4419	472
VVF47.150	2-port seat valve VVF47.150, DN150, kvs 315	N4419	472
VVF47.50	2-port seat valve VVF47.50, DN50, kvs 40	N4419	472
VVF47.65	2-port seat valve VVF47.65, DN65, kvs 63	N4419	472
VVF47.80	2-port seat valve VVF47.80, DN80, kvs 100	N4419	472
VVF52.100-160KC	2-port valve, flanged, DN100, pressure compensated	A6V14027860	468
VVF52.125-200KC	2-port valve, flanged, DN125, pressure compensated	A6V14027860	468
VVF52.150-315KC	2-port valve, flanged, DN150, pressure compensated	A6V14027860	468
VVF52.65-63KC	2-port valve, flanged, DN65, pressure compensated	A6V14027860	468
VVF52.80-100KC	2-port valve, flanged, DN80, pressure compensated	A6V14027860	468
VVF53.100-150K	2-port seat valve, flanged, PN25, DN100, kvs 150, pressure compensated	N4405	476
VVF53.100-160	2-port seat valve, flanged, PN25, DN100, kvs 160	N4405	473
VVF53.125-220K	2-port seat valve, flanged, PN25, DN125, kvs 220, pressure compensated	N4405	476
VVF53.125-250	2-port seat valve, flanged, PN25, DN125, kvs 250	N4405	473
VVF53.15-0.16	2-port seat valve, flanged, PN25, DN15, kvs 0.16	N4405	473
VVF53.15-0.2	2-port seat valve, flanged, PN25, DN15, kvs 0.2	N4405	473
VVF53.15-0.25	2-port seat valve, flanged, PN25, DN15, kvs 0.25	N4405	473
VVF53.15-0.32	2-port seat valve, flanged, PN25, DN15, kvs 0.32	N4405	473
VVF53.15-0.4	2-port seat valve, flanged, PN25, DN15, kvs 0.4	N4405	473
VVF53.15-0.5	2-port seat valve, flanged, PN25, DN15, kvs 0.5	N4405	473
VVF53.15-0.63	2-port seat valve, flanged, PN25, DN15, kvs 0.63	N4405	473
VVF53.15-0.8	2-port seat valve, flanged, PN25, DN15, kvs 0.8	N4405	473
VVF53.150-315K	2-port seat valve, flanged, PN25, DN150, kvs 315, pressure compensated	N4405	476

Product no.	Product Title	Data sheet	Page
VVF53.150-400	2-port seat valve, flanged, PN25, DN150, kvs 360	N4405	473
VVF53.15-1	2-port seat valve, flanged, PN25, DN15, kvs 1	N4405	473
VVF53.15-1.25	2-port seat valve, flanged, PN25, DN15, kvs 1.25	N4405	473
VVF53.15-1.6	2-port seat valve, flanged, PN25, DN15, kvs 1.6	N4405	473
VVF53.15-2	2-port seat valve, flanged, PN25, DN15, kvs 2	N4405	473
VVF53.15-2.5	2-port seat valve, flanged, PN25, DN15, kvs 2.5	N4405	473
VVF53.15-3.2	2-port seat valve, flanged, PN25, DN15, kvs 3.2	N4405	473
VVF53.15-4	2-port seat valve, flanged, PN25, DN15, kvs 4	N4405	473
VVF53.200-450K	2-port seat valve, flanged, PN25, DN200, kvs 450, pressure compensated	N4405	476
VVF53.20-6.3	2-port seat valve, flanged, PN25, DN20, kvs 6.3	N4405	473
VVF53.250-630K	2-port seat valve, flanged, PN25, DN250, kvs 630, pressure compensated	N4405	476
VVF53.25-10	2-port seat valve, flanged, PN25, DN25, kvs 10	N4405	473
VVF53.25-5	2-port seat valve, flanged, PN25, DN25, kvs 5	N4405	473
VVF53.25-6.3	2-port seat valve, flanged, PN25, DN25, kvs 6.3	N4405	473
VVF53.25-8	2-port seat valve, flanged, PN25, DN25, kvs 8	N4405	473
VVF53.32-16	2-port seat valve, flanged, PN25, DN32, kvs 16	N4405	473
VVF53.40-12.5	2-port seat valve, flanged, PN25, DN40, kvs 12.5	N4405	473
VVF53.40-16	2-port seat valve, flanged, PN25, DN40, kvs 16	N4405	473
VVF53.40-20	2-port seat valve, flanged, PN25, DN40, kvs 20	N4405	473
VVF53.40-25	2-port seat valve, flanged, PN25, DN40, kvs 25	N4405	473
VVF53.50-31.5	2-port seat valve, flanged, PN25, DN50, kvs 31.5	N4405	473
VVF53.50-40	2-port seat valve, flanged, PN25, DN50, kvs 40	N4405	473
VVF53.50-40K	2-port seat valve, flanged, PN25, DN50, kvs 40, pressure compensated	N4405	476
VVF53.65-63	2-port seat valve, flanged, PN25, DN65, kvs 63	N4405	473
VVF53.65-63K	2-port seat valve, flanged, PN25, DN65, kvs 63, pressure compensated	N4405	476
VVF53.80-100	2-port seat valve, flanged, PN25, DN80, kvs 100	N4405	473
VVF53.80-100K	2-port seat valve, flanged, PN25, DN80, kvs 100, pressure compensated	N4405	476
VVF63.100-125	2-port valve, PN 40, DN 100, kvs 125, with flanged connections	A6V11459527	478
VVF63.100-150K	2-port seat valve, PN40, DN 100, kvs 150, with flanged connections, pressure compensated	A6V11459527	479
VVF63.125-200	2-port valve, PN 40, DN 125, kvs 200, with flanged connections	A6V11459527	478
VVF63.125-220K	2-port seat valve, PN40, DN 125, kvs 220, with flanged connections, pressure compensated	A6V11459527	479
VVF63.15-0.2	2-port valve, PN 40, DN 15, kvs 0.2, with flanged connections	A6V11459527	478
VVF63.15-0.32	2-port valves, PN 40, DN 15, kvs 0.32, with flanged connections	A6V11459527	478
VVF63.15-0.5	2-port valves, PN 40, DN 15, kvs 0.5, with flanged connections	A6V11459527	478
VVF63.15-0.8	2-port valves, PN 40, DN 15, kvs 0.8, with flanged connections	A6V11459527	478
VVF63.150-315	2-port valve, PN 40, DN 150, kvs 315, with flanged connections	A6V11459527	478
VVF63.150-315K	2-port seat valve, PN40, DN 150, kvs 280, with flanged connections, pressure compensated	A6V11459527	479
VVF63.15-1.25	2-port valves, PN 40, DN 15, kvs 1.25, with flanged connections	A6V11459527	478
VVF63.15-2	2-port valves, PN 40, DN 15, kvs 2, with flanged connections	A6V11459527	478
VVF63.15-3.2	2-port valve, PN 40, DN 15, kvs 3.2, with flanged connections	A6V11459527	478
VVF63.20-6.3	2-port valve, PN 40, DN 20, kvs 5, with flanged connections	A6V11459527	478
VVF63.25-5	2-port valve, PN 40, DN 25, kvs 5, with flanged connections	A6V11459527	478
VVF63.25-8	2-port valve, PN 40, DN 25, kvs 8, with flanged connections	A6V11459527	478
VVF63.32-16	2-port valve, PN 40, DN 32, kvs 15, with flanged connections	A6V11459527	478
VVF63.40-12.5	2-port valve, PN 40, DN 40, kvs 12.5, with flanged connections	A6V11459527	478
VVF63.40-20	2-port valve, PN 40, DN 40, kvs 20, with flanged connections	A6V11459527	478
VVF63.50-31.5	2-port valve, PN 40, DN 50, kvs 31.5, with flanged connections	A6V11459527	478
VVF63.50-40K	2-port valve, PN40, DN 50, kvs 36, with flanged connections, pressure compensated	A6V11459527	479
VVF63.65-50	2-port valve, PN 40, DN 65, kvs 50, with flanged connections	A6V11459527	478
VVF63.65-63K	2-port seat valve, PN40, DN 65, kvs 63, with flanged connections, pressure compensated	A6V11459527	479

Product no.	Product Title	Data sheet	Page
VVF63.80-100K	2-port seat valve, PN40, DN 80, kvs 100, with flanged connections, pressure compensated	A6V11459527	479
VVF63.80-80	2-port valve, PN 40, DN 80, kvs 80, with flanged connections	A6V11459527	478
VVG41.11	2-port seat valve, external thread, PN16, DN15, kvs 0.63	N4363	497
VVG41.12	2-port seat valve, external thread, PN16, DN15, kvs 1	N4363	497
VVG41.13	2-port seat valve, external thread, PN16, DN15, kvs 1.6	N4363	497
VVG41.14	2-port seat valve, external thread, PN16, DN15, kvs 2.5	N4363	497
VVG41.15	2-port seat valve, external thread, PN16, DN15, kvs 4	N4363	497
VVG41.20	2-port seat valve, external thread, PN16, DN20, kvs 6.3	N4363	497
VVG41.25	2-port seat valve, external thread, PN16, DN25, kvs 10	N4363	497
VVG41.32	2-port seat valve, external thread, PN16, DN32, kvs 16	N4363	497
VVG41.40	2-port seat valve, external thread, PN16, DN40, kvs 25	N4363	497
VVG41.50	2-port seat valve, external thread, PN16, DN50, kvs 40	N4363	497
VVG44.15-0.25	2-port seat valve, external thread, PN16, DN15, kvs 0.25	N4364	499
VVG44.15-0.4	2-port seat valve, external thread, PN16, DN15, kvs 0.4	N4364	499
VVG44.15-0.63	2-port seat valve, external thread, PN16, DN15, kvs 0.63	N4364	499
VVG44.15-1	2-port seat valve, external thread, PN16, DN15, kvs 1	N4364	499
VVG44.15-1.6	2-port seat valve, external thread, PN16, DN15, kvs 1.6	N4364	499
VVG44.15-2.5	2-port seat valve, external thread, PN16, DN15, kvs 2.5	N4364	499
VVG44.15-4	2-port seat valve, external thread, PN16, DN15, kvs 4	N4364	499
VVG44.20-6.3	2-port seat valve, external thread, PN16, DN20, kvs 6.3	N4364	499
VVG44.25-10	2-port seat valve, external thread, PN16, DN25, kvs 10	N4364	499
VVG44.32-16	2-port seat valve, external thread, PN16, DN32, kvs 16	N4364	499
VVG44.40-25	2-port seat valve, external thread, PN16, DN40, kvs 25	N4364	499
VVG549.15-0.25	2-port seat valve, externally threaded, PN25, DN15, kvs 0.25	CA1Q4380	501
VVG549.15-0.4	2-port seat valve, externally threaded, PN25, DN15, kvs 0.4	CA1Q4380	501
VVG549.15-0.63	2-port seat valve, externally threaded, PN25, DN15, kvs 0.63	CA1Q4380	501
VVG549.15-1	2-port seat valve, externally threaded, PN25, DN15, kvs 1	CA1Q4380	501
VVG549.15-1.6	2-port seat valve, externally threaded, PN25, DN15, kvs 1.6	CA1Q4380	501
VVG549.15-2.5	2-port seat valve, externally threaded, PN25, DN15, kvs 2.5	CA1Q4380	501
VVG549.20-4K	2-port seat valve, externally threaded, PN25, DN20, kvs 4, pressure compensated	CA1Q4380	501
VVG549.25-6.3K	2-port seat valve, externally threaded, PN25, DN25, kvs 6.3, pressure compensated	CA1Q4380	501
VVI46.15/2	2-port zone valve, internally threaded, PN16, DN15, kvs 2.15	A6V10421629	493
VVI46.20/2	2-port zone valve, internally threaded, PN16, DN20, kvs 3.5	A6V10421629	493
VVI46.25/2	2-port zone valve, internally threaded, PN16, DN25, kvs 5	A6V10421629	493
VVI47.15-2.5	2-port seat valve, internally threaded, PN16, DN15, kvs 2.5	N4470	494
VVP45.10-0.25	2-port seat valve, external thread, PN16, DN10, kvs 0.25	N4845	489
VVP45.10-0.4	2-port seat valve, external thread, PN16, DN10, kvs 0.4	N4845	489
VVP45.10-0.63	2-port seat valve, external thread, PN16, DN10, kvs 0.63	N4845	489
VVP45.10-1	2-port seat valve, external thread, PN16, DN10, kvs 1	N4845	489
VVP45.10-1.6	2-port seat valve, external thread, PN16, DN10, kvs 1.6	N4845	489
VVP45.15-2.5	2-port seat valve, external thread, PN16, DN15, kvs 2.5	N4845	489
VVP45.15-2.5N	2-port seat valve, external thread, PN16, DN15, kvs 2.5	N4840	491
VVP45.20-4	2-port seat valve, external thread, PN16, DN20, kvs 4	N4845	489
VVP45.20-4N	2-port seat valve, external thread, PN16, DN20, kvs 4	N4840	491
VVP45.25-10	2-port seat valve, external thread, PN16, DN25, kvs 10	N4845	489
VVP45.25-6.3	2-port seat valve, external thread, PN16, DN25, kvs 6.3	N4845	489
VVP45.25-6.3N	2-port seat valve, external thread, PN16, DN25, kvs 6.3	N4840	491
VVP45.32-16	2-port seat valve, external thread, PN16, DN32, kvs 16	N4845	489
VVP45.40-25	2-port seat valve, external thread, PN16, DN40, kvs 25	N4845	489
VVP47.10-0.25	2-port seat valve, external thread, PN16, DN10, kvs 0.25	N4847	492
VVP47.10-0.4	2-port seat valve, external thread, PN16, DN10 kvs 0.4	N4847	492
VVP47.10-0.63	2-port seat valve, external thread, PN16, DN10, kvs 0.63	N4847	492
VVP47.10-1	2-port seat valve, external thread, PN16, DN10, kvs 1	N4847	492

Product no.	Product Title	Data sheet	Page
VVP47.10-1.6	2-port seat valve, external thread, PN16, DN10, kvs 1.6	N4847	492
VVP47.10-1.6S	2-port seat valve, external thread, PN16, DN10, kvs 1.6	N4847	492
VVP47.10-1S	2-port seat valve, external thread, PN16, DN10, kvs 1	N4847	492
VVP47.15-2.5	2-port seat valve, external thread, PN16, DN15, kvs 2.5	N4847	492
VVP47.20-4	2-port seat valve, external thread, PN16, DN20, kvs 4	N4847	492
VWG41.10-0.25-0.4	6-port control ball valves, externally threaded, PN16, DN10, kvs left 0.25, kvs right 0.4	A6V10564480	602
VWG41.10-0.25-0.65	6-port control ball valves, externally threaded, PN16, DN10, kvs left 0.25, kvs right 0.65	A6V10564480	602
VWG41.10-0.25-1.0	6-port control ball valves, externally threaded, PN16, DN10, kvs left 0.25, kvs right 1.0	A6V10564480	602
VWG41.10-0.25-1.3	6-port control ball valves, externally threaded, PN16, DN10	A6V10564480	602
VWG41.10-0.25-1.6	6-port control ball valves, externally threaded, PN16, DN10	A6V10564480	602
VWG41.10-0.25-1.9	6-port control ball valves, externally threaded, PN16, DN10	A6V10564480	602
VWG41.10-0.4-0.4	6-port control ball valves, externally threaded, PN16, DN10	A6V10564480	602
VWG41.10-0.4-0.65	6-port control ball valves, externally threaded, PN16, DN10, kvs left 0.4, kvs right 0.65	A6V10564480	602
VWG41.10-0.4-1.0	6-port control ball valves, externally threaded, PN16, DN10, kvs left 0.4, kvs right 1.0	A6V10564480	602
VWG41.10-0.4-1.3	6-port control ball valves, externally threaded, PN16, DN10, kvs left 0.4, kvs right 1.3	A6V10564480	602
VWG41.10-0.4-1.6	6-port control ball valves, externally threaded, PN16, DN10, kvs left 0.4, kvs right 1.6	A6V10564480	602
VWG41.10-0.4-1.9	6-port control ball valves, externally threaded, PN16, DN10	A6V10564480	602
VWG41.10-0.65-0.65	6-port control ball valves, externally threaded, PN16, DN10	A6V10564480	602
VWG41.10-0.65-1.0	6-port control ball valves, externally threaded, PN16, DN10, kvs left 0.65, kvs right 1.0	A6V10564480	602
VWG41.10-0.65-1.3	6-port control ball valves, externally threaded, PN16, DN10, kvs left 0.65, kvs right 1.3	A6V10564480	602
VWG41.10-0.65-1.6	6-port control ball valves, externally threaded, PN16, DN10, kvs left 0.65, kvs right 1.6	A6V10564480	602
VWG41.10-0.65-1.9	6-port control ball valves, externally threaded, PN16, DN10	A6V10564480	602
VWG41.10-1.0-1.0	6-port control ball valves, externally threaded, PN16, DN10	A6V10564480	602
VWG41.10-1.0-1.3	6-port control ball valves, externally threaded, PN16, DN10, kvs left 1.0, kvs right 1.3	A6V10564480	602
VWG41.10-1.0-1.6	6-port control ball valves, externally threaded, PN16, DN10, kvs left 1.0, kvs right 1.6	A6V10564480	602
VWG41.10-1.0-1.9	6-port control ball valves, externally threaded, PN16, DN10, kvs left 1.0, kvs right 1.9	A6V10564480	602
VWG41.10-1.3-1.3	6-port control ball valves, externally threaded, PN16, DN10	A6V10564480	602
VWG41.10-1.3-1.6	6-port control ball valves, externally threaded, PN16, DN10, kvs left 1.3, kvs right 1.6	A6V10564480	602
VWG41.10-1.3-1.9	6-port control ball valves, externally threaded, PN16, DN10, kvs left 1.3, kvs right 1.9	A6V10564480	602
VWG41.10-1.6-1.6	6-port control ball valves, externally threaded, PN16, DN10	A6V10564480	602
VWG41.10-1.6-1.9	6-port control ball valves, externally threaded, PN16, DN10, kvs left 1.6, kvs right 1.9	A6V10564480	602
VWG41.10-1.9-1.9	6-port control ball valves, externally threaded, PN16, DN10, kvs left 1.9, kvs right 1.9	A6V10564480	602
VWG41.20-0.25-2.5	6-port control ball valves, externally threaded, PN16, DN20	A6V10564480	603
VWG41.20-0.25-3.45	6-port control ball valves, externally threaded, PN16, DN20	A6V10564480	603
VWG41.20-0.25-4.25	6-port control ball valves, externally threaded, PN16, DN20	A6V10564480	603
VWG41.20-0.4-2.5	6-port control ball valves, externally threaded, PN16, DN20	A6V10564480	603
VWG41.20-0.4-3.45	6-port control ball valves, externally threaded, PN16, DN20	A6V10564480	603
VWG41.20-0.4-4.25	6-port control ball valves, externally threaded, PN16, DN20	A6V10564480	603
VWG41.20-0.65-2.5	6-port control ball valves, externally threaded, PN16, DN20, kvs left 0.65, kvs right 2.5	A6V10564480	603
VWG41.20-0.65-3.45	6-port control ball valves, externally threaded, PN16, DN20	A6V10564480	603
VWG41.20-0.65-4.25	6-port control ball valves, externally threaded, PN16, DN20	A6V10564480	603
VWG41.20-1.0-2.5	6-port control ball valves, externally threaded, PN16, DN20, kvs left 1.0, kvs right 2.5	A6V10564480	603
VWG41.20-1.0-3.45	6-port control ball valves, externally threaded, PN16, DN20	A6V10564480	603
VWG41.20-1.0-4.25	6-port control ball valves, externally threaded, PN16, DN20	A6V10564480	603
VWG41.20-1.3-2.5	6-port control ball valves, externally threaded, PN16, DN20	A6V10564480	603
VWG41.20-1.3-3.45	6-port control ball valves, externally threaded, PN16, DN20	A6V10564480	603
VWG41.20-1.3-4.25	6-port control ball valves, externally threaded, PN16, DN20	A6V10564480	603
VWG41.20-1.6-2.5	6-port control ball valves, externally threaded, PN16, DN20, kvs left 1.6, kvs right 2.5	A6V10564480	603
VWG41.20-1.6-3.45	6-port control ball valves, externally threaded, PN16, DN20, kvs left 1.6, kvs right 3.45	A6V10564480	603
VWG41.20-1.6-4.25	6-port control ball valves, externally threaded, PN16, DN20	A6V10564480	603
VWG41.20-2.5-2.5	6-port control ball valves, externally threaded, PN16, DN20	A6V10564480	603
VWG41.20-2.5-3.45	6-port control ball valves, externally threaded, PN16, DN20, kvs left 2.5, kvs right 3.45	A6V10564480	603
VWG41.20-2.5-4.25	6-port control ball valves, externally threaded, PN16, DN20, kvs left 2.5, kvs right 4.25	A6V10564480	603

Product no.	Product Title	Data sheet	Page
VWG41.20-3.45-3.45	6-port control ball valves, externally threaded, PN16, DN20	A6V10564480	603
VWG41.20-4.25-4.25	6-port control ball valves, externally threaded, PN16, DN20, kvs left 4.25, kvs right 4.25	A6V10564480	603
VWG42.10-0.25-0.25	6-port compact control ball valves, externally threaded, PN16, DN10, k_{vs} left = 0.25, k_{vs} right = 0.25	A6V14034341	604
VWG42.10-0.25-0.4	6-port compact control ball valves, externally threaded, PN16, DN10, k_{vs} left = 0.25, k_{vs} right = 0.4	A6V14034341	604
VWG42.10-0.25-0.65	6-port compact control ball valves, externally threaded, PN16, DN10, k_{vs} left = 0.25, k_{vs} right = 0.65	A6V14034341	604
VWG42.10-0.25-1.0	6-port compact control ball valves, externally threaded, PN16, DN10, k_{vs} left = 0.25, k_{vs} right = 1.0	A6V14034341	604
VWG42.10-0.25-1.3	6-port compact control ball valves, externally threaded, PN16, DN10, k_{vs} left = 0.25, k_{vs} right = 1.3	A6V14034341	604
VWG42.10-0.25-1.6	6-port compact control ball valves, externally threaded, PN16, DN10, k_{vs} left = 0.25, k_{vs} right = 1.6	A6V14034341	604
VWG42.10-0.25-1.95	6-port compact control ball valves, externally threaded, PN16, DN10, k_{vs} left = 0.25, k_{vs} right = 1.95	A6V14034341	604
VWG42.10-0.4-0.4	6-port compact control ball valves, externally threaded, PN16, DN10, k_{vs} left = 0.4, k_{vs} right = 0.4	A6V14034341	604
VWG42.10-0.4-0.65	6-port compact control ball valves, externally threaded, PN16, DN10, k_{vs} left = 0.4, k_{vs} right = 0.65	A6V14034341	604
VWG42.10-0.4-1.0	6-port compact control ball valves, externally threaded, PN16, DN10, k_{vs} left = 0.4, k_{vs} right = 1.0	A6V14034341	604
VWG42.10-0.4-1.3	6-port compact control ball valves, externally threaded, PN16, DN10, k_{vs} left = 0.4, k_{vs} right = 1.3	A6V14034341	604
VWG42.10-0.4-1.6	6-port compact control ball valves, externally threaded, PN16, DN10, k_{vs} left = 0.4, k_{vs} right = 1.6	A6V14034341	604
VWG42.10-0.4-1.95	6-port compact control ball valves, externally threaded, PN16, DN10, k_{vs} left = 0.4, k_{vs} right = 1.95	A6V14034341	604
VWG42.10-0.65-0.65	6-port compact control ball valves, externally threaded, PN16, DN10, k_{vs} left = 0.65, k_{vs} right = 0.65	A6V14034341	604
VWG42.10-0.65-1.0	6-port compact control ball valves, externally threaded, PN16, DN10, k_{vs} left = 0.65, k_{vs} right = 1.0	A6V14034341	604
VWG42.10-0.65-1.3	6-port compact control ball valves, externally threaded, PN16, DN10, k_{vs} left = 0.65, k_{vs} right = 1.3	A6V14034341	604
VWG42.10-0.65-1.6	6-port compact control ball valves, externally threaded, PN16, DN10, k_{vs} left = 0.65, k_{vs} right = 1.6	A6V14034341	604
VWG42.10-0.65-1.95	6-port compact control ball valves, externally threaded, PN16, DN10, k_{vs} left = 0.65, k_{vs} right = 1.95	A6V14034341	604
VWG42.10-1.0-1.0	6-port compact control ball valves, externally threaded, PN16, DN10, k_{vs} left = 1.0, k_{vs} right = 1.0	A6V14034341	604
VWG42.10-1.0-1.3	6-port compact control ball valves, externally threaded, PN16, DN10, k_{vs} left = 1.0, k_{vs} right = 1.3	A6V14034341	604
VWG42.10-1.0-1.6	6-port compact control ball valves, externally threaded, PN16, DN10, k_{vs} left = 1.0, k_{vs} right = 1.6	A6V14034341	604
VWG42.10-1.0-1.95	6-port compact control ball valves, externally threaded, PN16, DN10, k_{vs} left = 1.0, k_{vs} right = 1.95	A6V14034341	604
VWG42.10-1.3-1.3	6-port compact control ball valves, externally threaded, PN16, DN10, k_{vs} left = 1.3, k_{vs} right = 1.3	A6V14034341	604
VWG42.10-1.3-1.6	6-port compact control ball valves, externally threaded, PN16, DN10, k_{vs} left = 1.3, k_{vs} right = 1.6	A6V14034341	604
VWG42.10-1.3-1.95	6-port compact control ball valves, externally threaded, PN16, DN10, k_{vs} left = 1.3, k_{vs} right = 1.95	A6V14034341	604
VWG42.10-1.6-1.6	6-port compact control ball valves, externally threaded, PN16, k_{vs} left = 1.6, k_{vs} right = 1.6	A6V14034341	604
VWG42.10-1.6-1.95	6-port compact control ball valves, externally threaded, PN16, DN10, k_{vs} left = 1.6, k_{vs} right = 1.95	A6V14034341	604

Product no.	Product Title	Data sheet	Page
VWG42.10-1.95-1.95	6-port compact control ball valves, externally threaded, PN16, DN10, k_{vs} left = 1.95, k_{vs} right = 1.95	A6V14034341	604
VWPG51.15F1.2	6-port PICV, PN 25, externally threaded	A6V12815016	570
VWPG51.15F1.2Q	6-port PICV, PN 25, externally threaded	A6V12815016	570
VWPG51.15L0.9	6-port PICV, PN 25, externally threaded	A6V12815016	570
VWPG51.15L0.9Q	6-port PICV, PN 25, externally threaded	A6V12815016	570
VWPG51.20F4.3	6-port PICV, PN 25, externally threaded	A6V12815016	570
VWPG51.20F4.3Q	6-port PICV, PN 25, externally threaded	A6V12815016	570
VXF22.100-160	3-port valve, flanged, PN6, DN100, kvs 160	N4401	504
VXF22.25-10	3-port valve, flanged, PN6, DN25, kvs 10	N4401	504
VXF22.25-2.5	3-port valve, flanged, PN6, DN25, kvs 2.5	N4401	504
VXF22.25-4	3-port valve, flanged, PN6, DN25, kvs 4	N4401	504
VXF22.25-6.3	3-port valve, flanged, PN6, DN25, kvs 6.3	N4401	504
VXF22.40-16	3-port valve, flanged, PN6, DN40, kvs 16	N4401	504
VXF22.40-25	3-port valve, flanged, PN6, DN40, kvs 25	N4401	504
VXF22.50-40	3-port valve, flanged, PN6, DN50, kvs 40	N4401	504
VXF22.65-63	3-port valve, flanged, PN6, DN65, kvs 63	N4401	504
VXF22.80-100	3-port valve, flanged, PN6, DN80, kvs 100	N4401	504
VXF32.100-160	3-port valve, flanged, PN10, DN100, kvs 160	N4402	506
VXF32.125-250	3-port valve, flanged, PN10, DN125, kvs 250	N4402	506
VXF32.150-400	3-port valve, flanged, PN10, DN150, kvs 400	N4402	506
VXF32.15-1.6	3-port valve, flanged, PN10, DN15, kvs 1.6	N4402	506
VXF32.15-2.5	3-port valve, flanged, PN10, DN15, kvs 2.5	N4402	506
VXF32.15-4	3-port valve, flanged, PN10, DN15, kvs 4	N4402	506
VXF32.25-10	3-port valve, flanged, PN10, DN25, kvs 10	N4402	506
VXF32.25-6.3	3-port valve, flanged, PN10, DN25, kvs 6.3	N4402	506
VXF32.40-16	3-port valve, flanged, PN10, DN40, kvs 16	N4402	506
VXF32.40-25	3-port valve, flanged, PN10, DN40, kvs 25	N4402	506
VXF32.50-40	3-port valve, flanged, PN10, DN50, kvs 40	N4402	506
VXF32.65-63	3-port valve, flanged, PN10, DN65, kvs 63	N4402	506
VXF32.80-100	3-port valve, flanged, PN10, DN80, kvs 100	N4402	506
VXF42.100-125	3-port valve, flanged, PN16, DN100, kvs 125	N4403	508
VXF42.100-125C	3-port valve, flanged, PN16, DN100, kvs 125, for Asian market	A6V10794157	511
VXF42.100-160	3-port valve, flanged, PN16, DN100, kvs 160	N4403	508
VXF42.100-160C	3-port valve, flanged, PN16, DN100, kvs 160, for Asian market	A6V10794157	511
VXF42.125-200	3-port valve, flanged, PN16, DN125, kvs 200	N4403	508
VXF42.125-200C	3-port valve, flanged, PN16, DN125, kvs 200, for Asian market	A6V10794157	511
VXF42.125-250	3-port valve, flanged, PN16, DN125, kvs 250	N4403	508
VXF42.125-250C	3-port valve, flanged, PN16, DN125, kvs 250, for Asian market	A6V10794157	511
VXF42.150-315	3-port valve, flanged, PN16, DN150, kvs 315	N4403	508
VXF42.150-315C	3-port valve, flanged, PN16, DN150, kvs 315, for Asian market	A6V10794157	511
VXF42.150-400	3-port valve, flanged, PN16, DN150, kvs 400	N4403	508
VXF42.150-400C	3-port valve, flanged, PN16, DN150, kvs 400, for Asian market	A6V10794157	511
VXF42.15-1.6	3-port valve, flanged, PN16, DN15, kvs 1.6	N4403	508
VXF42.15-2.5	3-port valve, flanged, PN16, DN15, kvs 2.5	N4403	508
VXF42.15-4	3-port valve, flanged, PN16, DN15, kvs 4	N4403	508
VXF42.20-6.3	3-port valve, flanged, PN16, DN20, kvs 6.3	N4403	508
VXF42.25-10	3-port valve, flanged, PN16, DN25, kvs 10	N4403	508
VXF42.25-10C	3-port valve, flanged, PN16, DN25, kvs 10, for Asian market	A6V10794157	511
VXF42.25-6.3	3-port valve, flanged, PN16, DN25, kvs 6.3	N4403	508
VXF42.25-6.3C	3-port valve, flanged, PN16, DN25, kvs 6.3, for Asian market	A6V10794157	511
VXF42.32-16	3-port valve, flanged, PN16, DN32, kvs 16	N4403	508
VXF42.32-16C	3-port valve, flanged, PN16, DN32, kvs 16, for Asian market	A6V10794157	511
VXF42.40-16	3-port valve, flanged, PN16, DN40, kvs 16	N4403	508

New Product

Product no.	Product Title	Data sheet	Page
VXF42.40-16C	3-port valve, flanged, PN16, DN40, kvs 16, for Asian market	A6V10794157	511
VXF42.40-25	3-port valve, flanged, PN16, DN40, kvs 25	N4403	508
VXF42.40-25C	3-port valve, flanged, PN16, DN40, kvs 25, for Asian market	A6V10794157	511
VXF42.50-31.5	3-port valve, flanged, PN16, DN50, kvs 31.5	N4403	508
VXF42.50-31.5C	3-port valve, flanged, PN16, DN50, kvs 31.5, for Asian market	A6V10794157	511
VXF42.50-40	3-port valve, flanged, PN16, DN50, kvs 40	N4403	508
VXF42.50-40C	3-port valve, flanged, PN16, DN50, kvs 40, for Asian market	A6V10794157	511
VXF42.65-50	3-port valve, flanged, PN16, DN65, kvs 50	N4403	508
VXF42.65-50C	3-port valve, flanged, PN16, DN65, kvs 50, for Asian market	A6V10794157	511
VXF42.65-63	3-port valve, flanged, PN16, DN65, kvs 63	N4403	508
VXF42.65-63C	3-port valve, flanged, PN16, DN65, kvs 63, for Asian market	A6V10794157	511
VXF42.80-100	3-port valve, flanged, PN16, DN80, kvs 100	N4403	508
VXF42.80-100C	3-port valve, flanged, PN16, DN80, kvs 100, for Asian market	A6V10794157	511
VXF42.80-80	3-port valve, flanged, PN16, DN80, kvs 80	N4403	508
VXF42.80-80C	3-port valve, flanged, PN16, DN80, kvs 80, for Asian market	A6V10794157	511
VXF43.100-125	3-port seat valve, flanged, PN16, DN 100, kvs 125	N4404	514
VXF43.100-160	3-port seat valve, flanged, PN16, DN 100, kvs 160	N4404	514
VXF43.125-200	3-port seat valve, flanged, PN16, DN 125, kvs 200	N4404	514
VXF43.125-250	3-port seat valve, flanged, PN16, DN 125, kvs 250	N4404	514
VXF43.150-315	3-port seat valve, flanged, PN16, DN 150, kvs 315	N4404	514
VXF43.150-400	3-port seat valve, flanged, PN16, DN 150, kvs 400	N4404	514
VXF43.65-50	3-port seat valve, flanged, PN16, DN 65, kvs 50	N4404	514
VXF43.65-63	3-port seat valve, flanged, PN16, DN 65, kvs 63	N4404	514
VXF43.80-100	3-port seat valve, flanged, PN16, DN 80, kvs 100	N4404	514
VXF43.80-80	3-port seat valve, flanged, PN16, DN 80, kvs 80	N4404	514
VXF47.100	3-port seat valve VXF47.100, DN100, kvs 160	N4419	516
VXF47.125	3-port seat valve VXF47.125, DN125, kvs 250	N4419	516
VXF47.150	3-port seat valve VXF47.150, DN150, kvs 315	N4419	516
VXF47.50	3-port seat valve VXF47.50, DN50, kvs 40	N4419	516
VXF47.65	3-port seat valve VXF47.65, DN65, kvs 63	N4419	516
VXF47.80	3-port seat valve VXF47.80, DN80, kvs 100	N4419	516
VXF53.100-160	3-port seat valve, flanged, PN25, DN100, kvs 160	N4405	517
VXF53.125-250	3-port seat valve, flanged, PN25, DN125, kvs 250	N4405	517
VXF53.150-400	3-port seat valve, flanged, PN25, DN150, kvs 400	N4405	517
VXF53.15-1.6	3-port seat valve, flanged, PN25, DN15, kvs 1.6	N4405	517
VXF53.15-2.5	3-port seat valve, flanged, PN25, DN15, kvs 2.5	N4405	517
VXF53.15-4	3-port seat valve, flanged, PN25, DN15, kvs 4	N4405	517
VXF53.20-6.3	3-port seat valve, flanged, PN25, DN20, kvs 6.3	N4405	517
VXF53.25-10	3-port seat valve, flanged, PN25, DN25, kvs 10	N4405	517
VXF53.25-6.3	3-port seat valve, flanged, PN25, DN25, kvs 6.3	N4405	517
VXF53.32-16	3-port seat valve, flanged, PN25, DN32, kvs 16	N4405	517
VXF53.40-16	3-port seat valve, flanged, PN25, DN40, kvs 16	N4405	517
VXF53.40-25	3-port seat valve, flanged, PN25, DN40, kvs 25	N4405	517
VXF53.50-40	3-port seat valve, flanged, PN25, DN50, kvs 40	N4405	517
VXF53.65-63	3-port seat valve, flanged, PN25, DN65, kvs 63	N4405	517
VXF53.80-100	3-port seat valve, flanged, PN25, DN80, kvs 100	N4405	517
VXF63.100-125	3-port valve, PN40, DN 100, kvs 125, with flanged connections	A6V11459527	520
VXF63.125-200	3-port valve, PN40, DN 125, kvs 200, with flanged connections	A6V11459527	520
VXF63.150-315	3-port valve, PN40, DN 150, kvs 315, with flanged connections	A6V11459527	520
VXF63.15-1.6	3-port valve, PN40, DN 15, kvs 1.6, with flanged connections	A6V11459527	520
VXF63.15-2.5	3-port valve, PN40, DN 15, kvs 2.5, with flanged connections	A6V11459527	520
VXF63.15-4	3-port valve, PN40, DN 15, kvs 4, with flanged connections	A6V11459527	520
VXF63.20-6.3	3-port valve, PN40, DN 20, kvs 6.3, with flanged connections	A6V11459527	520
VXF63.25-10	3-port valve, PN40, DN 25, kvs 10, with flanged connections	A6V11459527	520

Product no.	Product Title	Data sheet	Page
VXF63.25-6.3	3-port valve, PN40, DN 25, kvs 6.3, with flanged connections	A6V11459527	520
VXF63.32-16	3-port valve, PN40, DN 32, kvs 16, with flanged connections	A6V11459527	520
VXF63.40-16	3-port valves, PN40, DN 40, kvs 16, with flanged connections	A6V11459527	520
VXF63.40-25	3-port valve, PN40, DN 40, kvs 25, with flanged connections	A6V11459527	520
VXF63.50-31.5	3-port valve, PN40, DN 50, kvs 31.5, with flanged connections	A6V11459527	520
VXF63.65-50	3-port valve, PN 40, DN 65, kvs 50, with flanged connections	A6V11459527	520
VXF63.80-80	3-port valve, PN40, DN 80, kvs 80, with flanged connections	A6V11459527	520
VXG41.1301	3-port seat valve, external thread, PN16, DN15, kvs 1.6, tight bypass	N4463	534
VXG41.1401	3-port seat valve, external thread, PN16, DN15, kvs 2.5, tight bypass	N4463	534
VXG41.15	3-port seat valve, external thread, PN16, DN15, kvs 4	N4463	534
VXG41.1501	3-port seat valve, external thread, PN16, DN15, kvs 4, tight bypass	N4463	534
VXG41.20	3-port seat valve, external thread, PN16, DN20, kvs 6.3	N4463	534
VXG41.2001	3-port seat valve, external thread, PN16, DN20, kvs 6.3, tight bypass	N4463	534
VXG41.25	3-port seat valve, external thread, PN16, DN25, kvs 10	N4463	534
VXG41.2501	3-port seat valve, external thread, PN16, DN25, kvs 10, tight bypass	N4463	534
VXG41.32	3-port seat valve, external thread, PN16, DN32, kvs 16	N4463	534
VXG41.3201	3-port seat valve, external thread, PN16, DN32, kvs 16, tight bypass	N4463	534
VXG41.40	3-port seat valve, external thread, PN16, DN40, kvs 25	N4463	534
VXG41.4001	3-port seat valve, external thread, PN16, DN40, kvs 25, tight bypass	N4463	534
VXG41.50	3-port seat valve, external thread, PN16, DN50, kvs 40	N4463	534
VXG41.5001	3-port seat valve, external thread, PN16, DN50, kvs 40, tight bypass	N4463	534
VXG44.15-0.25	3-port seat valve, external thread, PN16, DN15, kvs 0.25	N4464	536
VXG44.15-0.4	3-port seat valve, external thread, PN16, DN15, kvs 0.4	N4464	536
VXG44.15-0.63	3-port seat valve, external thread, PN16, DN15, kvs 0.63	N4464	536
VXG44.15-1	3-port seat valve, external thread, PN16, DN15, kvs 1	N4464	536
VXG44.15-1.6	3-port seat valve, external thread, PN16, DN15, kvs 1.6	N4464	536
VXG44.15-2.5	3-port seat valve, external thread, PN16, DN15, kvs 2.5	N4464	536
VXG44.15-4	3-port seat valve, external thread, PN16, DN15, kvs 4	N4464	536
VXG44.20-6.3	3-port seat valve, external thread, PN16, DN20, kvs 6.3	N4464	536
VXG44.25-10	3-port seat valve, external thread, PN16, DN25, kvs 10	N4464	536
VXG44.32-16	3-port seat valve, external thread, PN16, DN32, kvs 16	N4464	536
VXG44.40-25	3-port seat valve, external thread, PN16, DN40, kvs 25	N4464	536
VXI46.15/2	3-port zone valve, internally threaded, PN16, DN15, kvs 2.15, kvs bypass 1.5	A6V10421629	531
VXI46.20/2	3-port zone valve, internally threaded, PN16, DN20, kvs 3.5, kvs bypass 2.5	A6V10421629	531
VXI46.25/2	3-port zone valve, internally threaded, PN16, DN25, kvs 5, kvs bypass 3.5	A6V10421629	531
VXI46.25T/2	3-port zone valves, PN16 with on/off characteristic	A6V10421629	531
VXP45.10-0.25	3-port seat valve, external thread, PN16, DN10, kvs 0.25	N4845	526
VXP45.10-0.4	3-port seat valve, external thread, PN16, DN10, kvs 0.4	N4845	526
VXP45.10-0.63	3-port seat valve, external thread, PN16, DN10, kvs 0.63	N4845	526
VXP45.10-1	3-port seat valve, external thread, PN16, DN10, kvs 1	N4845	526
VXP45.10-1.6	3-port seat valve, external thread, PN16, DN10, kvs 1.6	N4845	526
VXP45.15-2.5	3-port seat valve, external thread, PN16, DN15, kvs 2.5	N4845	526
VXP45.20-4	3-port seat valve, external thread, PN16, DN20, kvs 4	N4845	526
VXP45.25-10	3-port seat valve, external thread, PN16, DN25, kvs 10	N4845	526
VXP45.25-6.3	3-port seat valve, external thread, PN16, DN25, kvs 6.3	N4845	526
VXP45.32-16	3-port seat valve, external thread, PN16, DN32, kvs 16	N4845	526
VXP45.40-25	3-port seat valve, external thread, PN16, DN40, kvs 25	N4845	526
VXP47.10-0.25	3-port seat valve, external thread, PN16, DN10, kvs 0.25	N4847	529
VXP47.10-0.4	3-port seat valve, external thread, PN16, DN10, kvs 0.4	N4847	529
VXP47.10-0.63	3-port seat valve, external thread, PN16, DN10, kvs 0.63	N4847	529
VXP47.10-1	3-port seat valve, external thread, PN16, DN10, kvs 1	N4847	529
VXP47.10-1.6	3-port seat valve, external thread, PN16, DN10, kvs 1.6	N4847	529
VXP47.15-2.5	3-port seat valve, external thread, PN16, DN15, kvs 2.5	N4847	529
VXP47.20-4	3-port seat valve, external thread, PN16, DN20, kvs 4	N4847	529

New Product

Product no.	Product Title	Data sheet	Page
walk-by	Walk-by radio system		739
WFK240.D080	Mechanical single-jet cold water meter with module slot, Q3 = 2.5 m³/h, L = 80 mm, G ¾ "	A6V12048975	710
WFK240.D110	Mechanical single-jet cold water meter with module slot, Q3 = 2.5 m³/h, L = 110 mm, G ¾ "	A6V12048975	710
WFK240.E130	Mechanical single-jet cold water meter with module slot, Q3 = 4 m³/h, L = 130 mm, G 1 "	A6V12048975	710
WFK30.D080	Mechanical water meter single-jet, with module slot, 2.5 m³/h, 80 mm, G ¾ ", cold	N5326	709
WFK30.D110	Mechanical water meter single-jet, with module slot, 2.5 m³/h, 110 mm, G ¾ ", cold	N5326	709
WFK30.E130	Mechanical single-jet water meters (module compatible)	N5326	709
WFK636.D080	Electronic impeller type cold water meter Q3 = 2.5 m3/h, wall-mounted, mounting length 80 mm, connecting thread 3/4", M-bus radio communication, S-mode, 11-year battery, up to 30 °C	A6V12128928	714
WFK636.D08C	Electronic impeller type cold water meter Q3 = 2.5 m3/h, wall mounted, mounting length 80 mm, connecting thread 3/4", M-bus radio communication, C-mode, 11 year battery, up to 30 °C	A6V12128928	714
WFK636.D110	Electronic impeller type cold water meter Q3 = 2.5 m3/h, wall-mounted, mounting length 110 mm, connecting thread 3/4", M-bus radio communication, S-mode, 11-year battery, up to 30 °C	A6V12128928	714
WFK636.D11C	Electronic impeller type cold water meter Q3 = 2.5 m3/h, wall mounted, mounting length 110 mm, connecting thread 3/4", M-bus radio communication, C-mode, 11 year battery, up to 30 °C	A6V12128928	714
WFM501-E000H0	Impeller type heat meter, nominal flow rate 0.6 m3/h	N5323	718
WFM502-E000H0	Impeller type heat meter, nominal flow rate 1.5 m3/h	N5323	718
WFM503-J000H0	Impeller type heat meter, nominal flow rate 2.5 m3/h	N5323	718
WFM541-G000H0	Impeller type heat meter 0.6 m3/h, with m-bus communication and 2 pulse inputs, mounting length 110 mm	A6V10800216	718
WFM542-C000H0	Impeller type heat meter 1.5 m3/h, with m-bus communication and 2 pulse inputs, mounting length 80 mm	A6V10800216	718
WFM542-G000H0	Impeller type heat meter 1.5 m3/h, with m-bus communication and 2 pulse inputs, mounting length 110 mm	A6V10800216	718
WFM543-L000H0	Impeller type heat meter 2.5 m3/h, with m-bus communication and 2 pulse inputs, mounting length 130 mm	A6V10800216	718
WFM681-G000H0	WFM681-G000H0 RF heat meter set	A6V11259309	719
WFM682-G000H0	WFM682-G000H0 RF heat meter set	A6V11259309	719
WFM683-L000H0	WFM683-L000H0 RF heat meter set	A6V11259309	719
WFW240.D080	Mechanical single-jet hot water meter with module slot, Q3 = 2.5 m³/h, L = 80 mm, G ¾ "	A6V12048975	710
WFW240.D110	Mechanical single-jet hot water meter with module slot, Q3 = 2.5 m³/h, L = 110 mm, G ¾ "	A6V12048975	710
WFW240.E130	Mechanical single-jet hot water meter with module slot, Q3 = 4 m³/h, L = 130 mm, G 1 "	A6V12048975	710
WFW30.D080	Mechanical water meter single-jet, with module slot, 2.5 m³/h, 80 mm, G ¾ ", hot	N5326	709
WFW30.D110	Mechanical water meter single-jet, with module slot, 2.5 m³/h, 110 mm, G ¾ ", hot	N5326	709
WFW30.E130	Mechanical single-jet water meters (module compatible)	N5326	709
WFW636.D080	Electronic impeller type hot water meter Q3 = 2.5 m3/h, wall-mounted, mounting length 80 mm, connecting thread 3/4", M-bus radio communication, S-mode, 11-year battery, up to 90 °C	A6V12128928	714
WFW636.D08C	Electronic impeller type hot water meter Q3 = 2.5 m3/h, wall-mounted, mounting length 80 mm, connecting thread 3/4", M-bus radio communication, 11-year battery, up to 90 °C	A6V12128928	714
WFW636.D110	Electronic impeller type hot water meter Q3 = 2.5 m3/h, wall-mounted, mounting length 110 mm, connecting thread 3/4", M-bus radio communication, S-mode, 11-year battery, up to 90 °C	A6V12128928	714
WFW636.D11C	Electronic impeller type hot water meter Q3 = 2.5 m3/h, wall-mounted, mounting length 110 mm, connecting thread 3/4", M-bus radio communication, C-mode, 11-year battery, up to 90 °C	A6V12128928	714
WFZ.IRDA-USB	Infrared read head (with USB interface)	N2886	708

New Product

Product no.	Product Title	Data sheet	Page
WFZ.P	Self-lock seal with sealing wire		712
WFZ.PS	Triggering tool for radio telegrams		713
WFZ.R110	Spacer G ¾", length 110mm		712
WFZ.R130	Spacer G 1", length 130 mm		712
WFZ.R2	WFZ.R2 Mounting kit	 	712
WFZ.R2-1	WFZ.R2-1 Mounting kit		712
WFZ.R80	Spacer G ¾", length 80 mm		712
WFZ.W	Mounting kit for washstand water meter		712
WFZ.Z	Mounting kit for tap water meter		712
WFZ311	M-bus add-on module for water meters WF.30.. / WM.10..	A6V11991477	743
WFZ43	Pulse add-on module with reed contact and namur circuit for WF.240.. water meters	N5302	712
WFZ44	Pulse add-on module with reed contact for WF.240.. water meters	N5302	712
WFZ51	M-bus add-on module for WFx5.. meters	N5323	743
WFZ661	Add-on radio module WFZ661 for water meters WF.30.. / WM.10..	A6V10986918	737
WFZ662	Radio module with integrated antenna for WFx5.. meters, S-mode	N5323	738
WFZ662C	Radio module with integrated antenna for WFx5.. meters, C-mode	N5323	737
WHE542-D100S	Electronic heat cost allocator with watchdog timer, Double sensor, Summer switch-off: 06/01 – 08/31, due date 12/31, meter reading by walk-by: Annually, S-mode	A6V10786229	706
WHE542-D291S	Electronic heat cost allocator with watchdog timer, Double sensor, Summer switch-off: 06/01 – 09/30, due date 09/30, meter reading by walk-by: Monthly, S-mode	A6V10786229	706
WHE632-D292C	Electronic heat cost allocator with watchdog timer, Double sensor, Summer switch-off: 06/01 - 09/30, due date 09/30, C-mode	A6V10786229	706
WMK10.D	Mechanical capsule cold water meter Q3 = 2.5 m3/h	N5327	711
WMW10.D	Mechanical capsule hot water meter Q3 = 2.5 m3/h	N5327	711
WSM506-0E	Ultrasonic heat meter 0.6 m³/h, mounting length 110 mm, connecting thread G 3/4",sensor Ø5.2x45 mm, battery life 11 years	N5372	722
WSM506-BE	Ultrasonic heat meter 0.6 m³/h, mounting length 110 mm, connecting thread G 3/4",sensor Ø5.2x45 mm, M-bus communication, battery life 11 years	N5372	722
WSM506-FE	Ultrasonic heat meter 0.6 m³/h, mounting length 110 mm, connecting thread G 3/4",sensor Ø5.2x45 mm, M-bus radio communication, battery life 11 years	N5372	722
WSM515-0E	Ultrasonic heat meter 1.5 m³/h, mounting length 110 mm, connecting thread G 3/4", sensor Ø5.2x45 mm, battery life 11years	N5372	722
WSM515-BE	Ultrasonic heat meter 1.5 m³/h, mounting length 110 mm, connecting thread G 3/4",sensor Ø5.2x45 mm, M-bus communication, battery life 11 years	N5372	722
WSM515-FE	Ultrasonic heat meter 1.5 m³/h, mounting length 110 mm, connecting thread G 3/4", sensor Ø5.2x45mm, M-bus radio communication, battery life 11 years	N5372	722
WSM525-0E	Ultrasonic heat meter 2.5 m³/h, mounting length 130 mm, connecting thread G 1", sensor Ø5.2x45 mm, battery life 11years	N5372	722
WSM525-BE	Ultrasonic heat meter 2.5 m³/h, mounting length 130 mm, connecting thread G 1",sensor Ø5.2x45 mm, M-bus communication, battery life 11 years	N5372	722
WSM525-FE	Ultrasonic heat meter 2.5 m³/h, mounting length 130 mm, connecting thread G 1", sensor Ø5.2x45mm, M-bus radio communication, battery life 11 years	N5372	722
WSM606-BE	Ultrasonic heat meter 0.6 m³/h, mounting length 110 mm, connecting thread G 3/4", sensor Ø5.2x45 mm, M-bus communication, battery life 11 years	N5372	724
WSM615-BE	Ultrasonic heat meter 1.5 m³/h, mounting length 110 mm, connecting thread G 3/4",sensor Ø5.2x45 mm, M-bus communication, battery life 11 years	N5372	724
WSM625-BE	Ultrasonic heat meter 2.5 m³/h, mounting length 130 mm, connecting thread G 1",sensor Ø5.2x45 mm, M-bus communication, battery life 11 years	N5372	724
WSM805-FBBAE3A	Ultrasonic heat meter 0,6 m³/h, mounting length 110 mm, connecting thread G ¾ ", sensor M10x1 mm, 27.5 mm, M-bus communication, 2 pulse inputs, 6 year battery	A6V11905989	726
WSM805-FHBAE3A	Ultrasonic heat meter 0,6 m³/h, mounting length 110 mm, connecting thread G ¾ ", sensor Ø5.2x45 mm, M-bus communication, 2 pulse inputs, 6 year battery	A6V11905989	726
WSM821-FBBAE3A	Ultrasonic heat meter 1.5 m³/h, mounting length 110 mm, connecting thread 3/4", sensor M10 x 1 mm, 27,5 mm, M-bus communication, 2 pulse inputs, 6 year battery	A6V11905989	726
WSM821-FHBAE3A	Ultrasonic heat meter 1,5 m³/h, mounting length 110 mm, connecting thread 3/4", sensor Ø5,2mm, 45 mm, M-bus communication, 2 pulse inputs, 6 year battery	A6V11905989	726

New Product

Product no.	Product Title	Data sheet	Page
WSM836-FBBAE3A	Ultrasonic heat meter 2.5 m³/h, mounting length 130 mm, connecting thread 1", sensor M10 x 1 mm, 27,5 mm, M-bus communication, 2 pulse inputs, 6 year battery	A6V11905989	726
WSM836-FHBAE3A	Ultrasonic heat meter 2.5 m³/h, mounting length 130 mm, connecting thread 1", sensor Ø5,2mm, 45 mm, M-bus communication, 2 pulse inputs, 6 year battery	A6V11905989	726
WSM843-FDBAE3A	Ultrasonic heat meter 3.5 m³/h, mounting length 260 mm, connecting thread 1 1/4", sensor M10 x 1 mm, 38 mm, M-bus communication, 2 pulse inputs, 6 year battery	A6V11905989	726
WSM853-FDBAE3A	Ultrasonic heat meter 6 m³/h, mounting length 260 mm, connecting thread 1 1/4", sensor M10 x 1 mm, 38 mm, M-bus communication, 2 pulse inputs, 6 year battery	A6V11905989	726
WSN506-BE	Ultrasonic heating/cooling meter 0.6 m³/h, mounting length 110 mm, sensor Ø5.2x45 mm, connecting thread G ¾", M-bus communication, battery life 11 years	N5372	722
WSN506-FE	Ultrasonic heating/cooling meter 0.6 m³/h, mounting length 110 mm, sensor Ø5.2x45 mm, connecting thread G ¾", M-bus radio communication, battery life 11 years	N5372	722
WSN515-BE	Ultrasonic heating/cooling meter 1.5 m³/h, mounting length 110 mm, sensor Ø5.2x45mm, connecting thread G ¾", M-bus communication, battery life 11 years	N5372	722
WSN515-FE	Ultrasonic heating/cooling meter 1.5 m³/h, mounting length 110 mm, sensor Ø5.2x45mm, connecting thread G ¾", M-bus radio communication, battery life 11 years	N5372	722
WSN525-BE	Ultrasonic heating/cooling meter 2.5 m³/h, mounting length 130 mm, sensor Ø5.2x45mm, connecting thread G 1", M-bus communication, battery life 11 years	N5372	722
WSN525-FE	Ultrasonic heating/cooling meter 2.5 m³/h, mounting length 130 mm, sensor Ø5.2x45mm, connecting thread G 1", M-bus radio communication, battery life 11 years	N5372	722
WSN606-BE	Ultrasonic heat/cooling energy meter, 0.6 m³/h, mounting length 110 mm, connecting thread G 3/4", sensor Ø5.2x45 mm, M-buscommunication, battery life 11 years	N5372	724
WSN615-BE	Ultrasonic heat/cooling energy meter, 1.5 m³/h, mounting length 110 mm, connecting thread G 3/4", sensor Ø5.2x45 mm, M-bus communication,battery life 11 years	N5372	724
WSN625-BE	Ultrasonic heat/cooling energy meter, 2.5 m³/h, mounting length 130 mm, connecting thread G 1", sensor Ø5.2x45 mm, M-bus communication,battery life 11 years	N5372	724
WSN805-FBBBF3A	Ultrasonic heat/cooling energy meter 0.6 m3/h, mounting length 110 mm, connecting thread 3/4", sensor M10 x 1 mm, 27,5 mm, m-bus communication, 2 pulse inputs, 11 year battery	A6V11905989	726
WSN821-FBBBF3A	Ultrasonic heat/cooling energy meter 1.5 m3/h, mounting length 110 mm, connecting thread 3/4", sensor M10 x 1 mm, 27,5 mm, m-bus communication, 2 pulse inputs, 11 year battery	A6V11905989	726
WSN836-FBBBF3A	Ultrasonic heat/cooling energy meter 2.5 m3/h, mounting length 130 mm, connecting thread 1", sensor M10 x 1 mm, 27,5 mm, m-bus communication, 2 pulse inputs, 11 year battery	A6V11905989	726
WSN843-FDBBF3A	Ultrasonic heat/cooling energy meter 3.5 m3/h, mounting length 260 mm, connecting thread 1 1/4", sensor M10 x 1 mm, 38 mm, m-bus communication, 2 pulse inputs, 11 year battery	A6V11905989	726
WSN853-FDBBF3A	Ultrasonic heat/cooling energy meter 6 m3/h, mounting length 260 mm, connecting thread 1 1/4", sensor M10 x 1 mm, 38 mm, m-bus communication, 2 pulse inputs, 11 year battery	A6V11905989	726
WTT726-FE7300	Mobile tool for ACT60 WTT726-FE7300	A6V12732504	738
WTV531-GA5060	Level converter	A6V10844290	742
WTV676-HB6035	M-bus web server	A6V11157961	741
WTX631-GA0090	M-bus Level Converter/Repeater 250	A6V11742346	742
WTZ.BAT	Battery for WTT..		738
WZM-E1	Mounting kit G1", for threaded connection R ¾"		723
WZM-E34	Installation kit G ¾", for threaded connection R ½"		723
WZM-E54	Installation kit G1 1/4 x R1"	N5324	726
WZM-F190	Spacer for heat meter DN20, length 190 mm, PN16, incl. 2 flat gaskets		735
WZM-F260	Spacer for heat meter DN25, length 260 mm, PN16, incl. 2 flat gaskets		735
WZM-F270	Spacer DN 50, length 270 mm, PN16, incl. 2 flat gaskets	N5324	735
WZM-F300	Spacer DN 40, length 300 mm, PN16, incl. 2 flat gaskets	N5324	735
WZM-F300.65	Spacer DN 65, length 300 mm, PN16, incl. 2 flat gaskets	N5324	735

Product no.	Product Title	Data sheet	Page
WZM-F300.80	Spacer DN 80, length 300 mm, PN16, incl. 2 flat gaskets	N5324	735
WZM-F360.100-25	Spacer DN 100, length 360 mm, PN25, incl. 2 flat gaskets	N5324	735
WZM-G110	Spacer G ¾", length 110 mm, incl. 2 flat gaskets		723
WZM-G130	Spacer G 1", length 130 mm, incl. 2 flat gaskets		723
WZM-G190	Spacer G 1", length 190 mm, incl. 2 flat gaskets	N5324	735
WZM-G260	Spacer G 1¼", length 260 mm, incl. 2 flat gaskets	N5324	727
WZM-G300.1	Spacer G 2", length 300 mm, incl. 2 gaskets		735
WZM-V110	Adapter set from G ¾" to 1", incl. gaskets		712
WZM-V130	Extension set from 110 mm G ¾" to 130 mm G ¾", incl. gaskets		712
WZM-V165	Extension set from 110 mm G ¾" to 165 mm G ¾", incl. gaskets		712
WZM-V190	Extension set from 110 mm G ¾" to 190 mm G 1", incl. gaskets		712
WZT-A12	Adapter M10x1 mm x G 1/2 B" for sensor DS M10x1 mm / d=5.2 x 45 mm		723
WZT-FA	Mounting set for sensor Ø 5.2x45 mm		727
WZT-G10	Welding sleeve with threaded hole for temperature sensor DS M10×1 mm		557
WZT-G12	Welding sleeve G ½", 45° to the pipe axis, with threaded hole G ½"		546
WZT-K1	Ball valve Rp 1" for sensor DS M10x1 mm, length 27.5 mm or Ø 5.2x45 mm		557
WZT-K12	Ball valve Rp ½" for sensor DS M10x1 mm, length 27.5 mm or Ø 5.2x45 mm		557
WZT-K34	Ball valve Rp ¾" for sensor DS M10x1 mm, length = 27.5 mm or Ø 5.2x45 mm		557
WZT-M35	Protection pocket G ½ B", length 35 mm, made of brass, for temperature sensor Ø 5.2x45 mm		723
WZT-S100	Protection pocket G ½ B", stainless steel, with threaded hole G ¼", L = 100 mm	N5324	735
WZT-S150	Protection pocket G ½ B", stainless steel, with threaded hole G ¼", L = 150 mm	N5324	735
WZU-AC110/230-15	Power supply AC 110/230 V for UH50..	N5324	735
WZU-AC110/230-50	Power supply AC 110/230 V for UH50..	N5324	735
WZU-ACDC24-50	Power pack AC/DC 24 V	N5324	735
WZU-BA+GUM	Standard battery (2x AA) for 6 years, complete with fastener	N5324	735
WZU-BDS	Universal battery (D-cell), life 6 and 16 years respectively	N5324	735
WZU-MB G4	M-bus module for heat and heat/cooling energy meters, generation 4	N5324	735
WZU-MI	M-bus module with 2 pulse inputs for heat and heat/cooling energy meters, generation 4	N5324	735
WZU-P2	Pulse module with 2 channels	N5324	735
WZX-UA-PEU-MINI	UltraAssist Profi, first license, CD with USB mini-dongle		723
WZX-UA-PFU-MINI	UltraAssist Profi, second license, USB mini-dongle		723
Z155/100	Blanking flange, DN100		525
Z155/15F	Blanking flange, DN15		524
Z155/20F	Blanking flange, DN20		524
Z155/25F	Blanking flange, DN25		524
Z155/32F	Blanking flange, DN32		524
Z155/40	Blanking flange, DN40		524
Z155/50	Blanking flange, DN50		524
Z155/65	Blanking flange, DN65		524
Z155/80	Blanking flange, DN80		525
Z366	Stem heating element for media temperatures 0 °C, 10 W, AC/DC 24 V		541
ZM100/A	Terminal housing for control of valves with magnetic actuator, AC 24 V, DC 0...10 V / 0...20 V Phs	N4591	627
ZM101/A	Terminal housing for valves with magnetic actuator, AC 24 V, DC 0...10 V / 0...20 V Phs	N4591	627
ZM120/A	Terminal housing for control of valves with magnetic actuator, AC 24 V, DC 4...20 mA / 0...20 V Phs	N4591	627
ZM121/A	Terminal housing for valves with magnetic actuator, AC 24 V, DC 4...20 mA / 0...20 V Phs	N4591	627
ZM150	Replacement electronic for M3P..GY, M3P..FY, M2H..FY.., M3B..GY.., M2S..FY and M2FE..	N4348	525

New Product

Product no.	Product Title	Data sheet	Page
ZM200/A	Terminal housing for control of valves with magnetic actuator, AC 24 V, DC 0...10 V / 0...20 V Phs	N4591	627
ZM220/A	Terminal housing for control of valves with magnetic actuator, AC 24 V, DC 4...20 mA / 0...20 V Phs	N4591	627
ZM250	Replacement electronic for M3P..FY..	N4454	525

Standard controllers

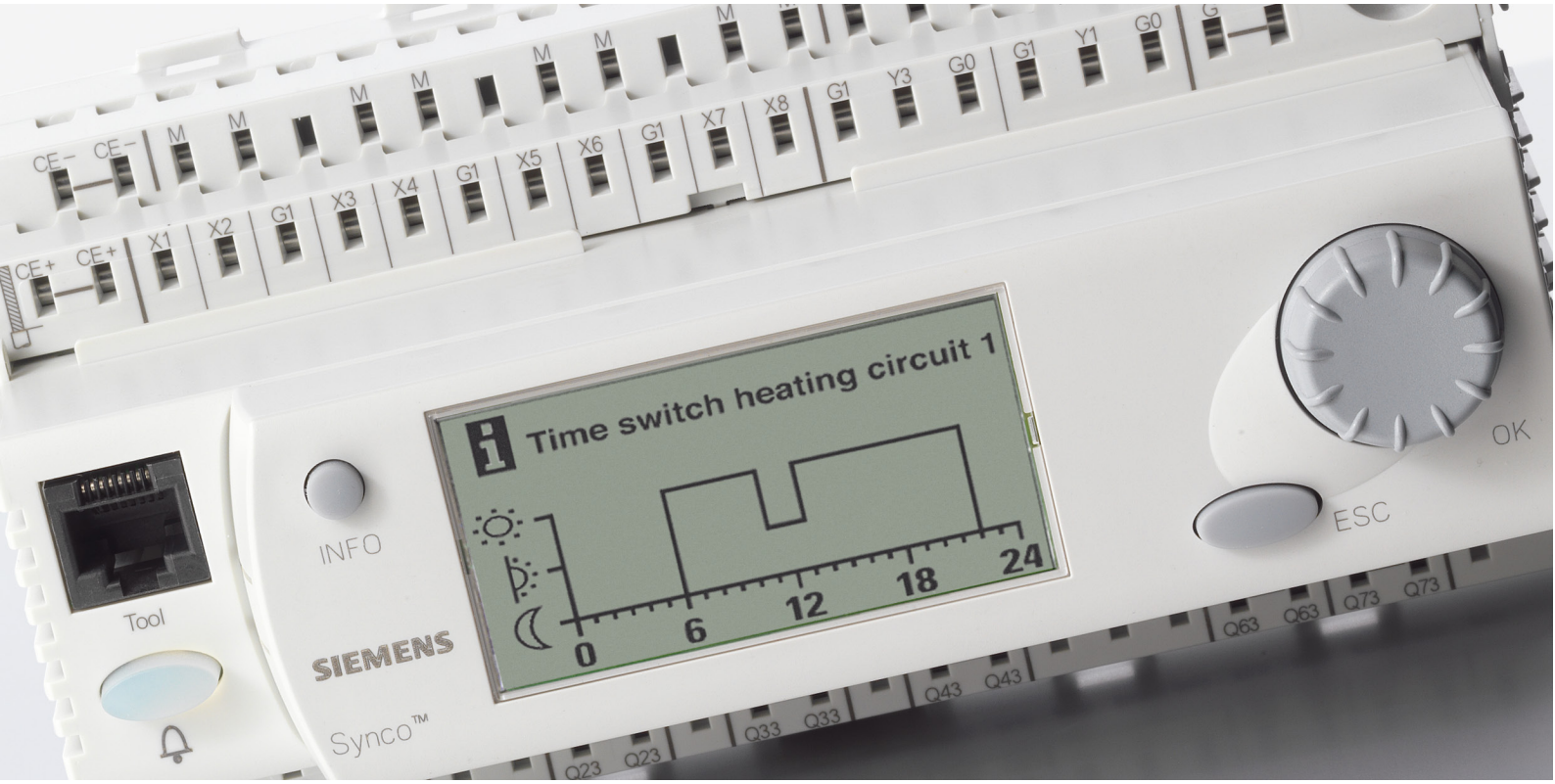

Overview and selection tools		68
Standalone heating controllers	Immersion temperature controllers RLE..	71
	Heating controller RVP2..	74
Communicating heating controllers	Heating controller RVP3..	77
	Heating controller RVL4..	81
	Room unit QA..	85
	Modular heating controller RMH760B..	87
	Boiler sequence controller RMK770..	88
	Extension modules and operator units for RMH760B.. and RMK770..	93
	Field devices for RMH760B.. and RMK770..	97
Standalone district heating controllers	District heating controllers RVD1..	98
Communicating district heating controllers	District heating controllers RVD2..	101
Standalone HVAC controllers	Duct temperature controllers RLM..	105
	Room temperature controllers RLA..	107
	Universal controllers RLU..	108
	Field devices for RLU..	110
	Universal controllers RWD..	112
Communicating HVAC controllers	Modular universal controllers RMU7..0B..	114
	Universal controllers RWG..	125
	Switching and monitoring device RMS705B..	126
	Extension modules and operator units for RMU7..0B.. and RMS705B..	127
	Field devices for RMU7..0B.. and RMS705B..	130
Various electrical accessories	Interfaces	133
	Display	136
	Time switches	137
	Transformers	138

Overview of heating controllers product details

Preferential applications	RLE..		RVP..		RVP..			RVL..				RMH	RMK
	132	162	201	211	340	350	360	479	480	481	482	760B	770
Heating group	■	■	■	■	■	■	■		■	■	■	■	■
Boiler control 1-stage			■	■									
2-stage						■	■		■	■	■	■	■
Multi-boiler system													■
Domestic hot water	■	■		■		■	■			■	■	■	
Domestic water solar						■	■			■	■	■	
2nd heating group							■	■				■	
3rd heating group												■	

Operation system	RLE..		RVP..		RVP..			RVL..				RMH	RMK
	132	162	201	211	340	350	360	479	480	481	482	760B	770
Type of operation analog	■	■	■	■									
digital					■	■	■	■	■	■	■	■	■
Heating curve bar								■	■	■	■		
Time switch analog			■	■									
digital			[1]	[1]	■	■	■	■	■	■	■	■	■
Programmed plant types	6	3			2	3	6	1	6	29	21	41	18
Yearly clock					■	■	■	■	■	■	■	■	■

[1] Variant

Communication	RLE..		RVP..		RVP..			RVL..				RMH	RMK
	132	162	201	211	340	350	360	479	480	481	482	760B	770
Controller network					LPB	LPB	LPB	LPB	LPB	LPB	LPB	KNX	KNX
Web operation					OZW672..			OZW672..				OZW772..	

Sensors	RLE..		RVP..		RVP..			RVL..				RMH	RMK
	132	162	201	211	340	350	360	479	480	481	482	760B	770
Outside sensor QAC22	■	■	■	■	■	■	■	■	■	■	■	■	■
Outside sensor QAC32			■	■	■	■	■	■	■	■	■	■	
Strap-on temp. sensor QAD22			■	■	■	■	■	■	■	■	■	■	■
Immersion temp. sensor QAE2..			■	■	■	■	■	■	■	■	■	■	■
Cable temp. sensor QAP2..			■	■	■	■	■	■	■	■	■	■	■
Room temp. sensor QAA24					■	■	■	■	■	■	■	■	■
Room temp. sensor AQR2531ANW					■	■	■	■	■	■	■	■	■
Solar sensor QLS60											■	■	

Room units	RLE..		RVP..		RVP..			RVL..				RMH	RMK
	132	162	201	211	340	350	360	479	480	481	482	760B	770
Room unit QAA50.110/101 analog			■	■	■	■	■	■	■	■	■		
Room unit digital QAW70..			■	■	■	■	■	■	■	■	■		
Room unit digital QAW740												■	■

Overview of district heating controllers product details

Preferential applications	RVD120	RVD140	RVD250	RVD260	RVP340	RVL480	RVL481	RMH760B
Heating group	■	■	■	■	■	■	■	■
District heat exchanger	■	■	■	■	[1]	[1]	[1]	■
Domestic hot water	■	■	■	■			■	■
Domestic water solar		■	■	■			■	■
2nd heating group				■				■
3rd heating group								■

[1] Variant: For the description of the controllers see chapter 1 „Communicative heating controllers".

Operation system		RVD120	RVD140	RVD250	RVD260	RVP340	RVL480	RVL481	RMH760B
Type of operation	analog								
	digital	■	■	■	■	■	■	■	■
Heating curve bar							■	■	
Time switch	analog								
	digital	■	■	■	■	■	■	■	■
Programmed plant types		3	8	28	14	2	6	29	41
Yearly clock		■	■	■	■	■	■	■	■

Communication	RVD120	RVD140	RVD250	RVD260	RVP340	RVL480	RVL481	RMH760B
Controller network			LPB	LPB	LPB	LPB	LPB	KNX
M-bus slave			■	■				
Web operation	ext. Modbus-Interface	ext. Modbus-Interface	OZW672.. WTV676		OZW672..	OZW672..		OZW772..

Sensors		RVD120	RVD140	RVD250	RVD260	RVP340	RVL480	RVL481	RMH760B
Outside sensor	QAC22	■	■	■	■	■	■	■	■
Outside sensor	QAC32	■	■	■	■	■	■	■	■
Strap-on temp. sensor	QAD22	■	■	■	■	■	■	■	■
Immersion temp. sensor	QAE2..	■	■	■	■	■	■	■	■
Cable temp. sensor	QAP2..	■	■	■	■	■	■	■	■
Room temp. sensor	QAA24					■	■	■	■
Room temp. sensor	AQR2531ANW					■	■	■	■
Solar sensor	QLS60								■
Pressure sensor	QBE2002..		■	■	■				

Room units		RVD120	RVD140	RVD250	RVD260	RVP340	RVL480	RVL481	RMH760B
Room unit analog	QAA50.110/101	■	■	■	■	■	■	■	
Room unit digital	QAW70..	■	■	■	■	■	■	■	
Room unit digital	QAW740								■

Overview of HVAC controllers product details

	RLM..	RLA..	RWD..					RLU..				RMU..			RMS..		RMZ	
	162	162	82	62	68	202	220	222	232	236	710B	720B	730B	705B	785	787	788
	Air duct temperature controller	Room temperature controller	Universal controller, 1 control loop, 2DO	Universal controller, 1 control loop, 2AO	Universal controller, 1 control loop, 1AO, 1DO	Universal controller, 1 control loop, 2DO	Universal controller, 1 control loop, 2AO	Universal controller, 2 control loops, 2AO, 2DO	Universal controller, 2 control loops, 3AO, 2DO	Universal controller, 2 control loops, 3AO, 6DO	Modular universal controller, 1 control loop	Modular universal controller, 2 control loops	Modular universal controller, 3 control loops	Switching and Monitoring Device	Universal module, 8UI	Universal module, 4UI, 4DO	Universal module, 4UI, 2DO, 2AO
Option modules for RMU7..0B and RMS705B											4[2]	4[2]	4[2]	4[2]	1[2]	2[2]	2[2]
Operation	■	■	■	■	■	■	■	■	■	■	■[1]	■[1]	■[1]	■[1]			
KNX communication											■	■	■	■			
7-day time switch and holiday/special day program											■	■	■	■			
Supervision											■	■	■	■			
Logic functions											■	■	■	■			
Outputs																	
Step switch						■		■	■	■	■	■	■	■			
Relay	1	1	2		1	2		2	2	6	2	4	6	6		4	2
3-position			1[3]			1[3]		1[3]									
DC 0...10 V	2	2		2	1		2	2	3	3	2	3	4	4			2
Universal inputs																	
T1						■	■	■	■	■	■	■	■	■	■	■	■
Pt1000			■	■	■	■	■	■	■	■	■	■	■	■	■	■	■
DC 0...10 V			■	■	■	■	■	■	■	■	■	■	■	■	■	■	■
Digital						■	■	■	■	■	■	■	■	■	■	■	■
LG-Ni 1000			■	■	■	■	■	■	■	■	■	■	■	■	■	■	■
Number of universal inputs	-	-	2	2	2	4	4	4	5	5	6	8	8	8	8	4	4
Fixed inputs																	
DC 0...10 V	1	1															
Digital	2	1	1	1	1	1	1	1	2	2							
LG-Ni 1000	1	1															
Integrated LG-Ni 1000 sensor	1	1															
Controlled variable																	
Universal			■	■	■	■	■	■	■	■	■	■	■	■			
Temperature °C	■	■	■	■	■	■	■	■	■	■	■	■	■	■			
Control mode																	
PID						■	■	■	■	■	■	■	■	■			
P/PI	■	■	■	■	■	■	■	■	■	■	■	■	■	■			
Control loops																	
Cascade			■	■	■	■	■	■	■	■	■	■	■				
Number	1	1	1	1	1	1	1	2	2	2	1	2	3	3			

■ [1] Optional operation:
RMZ790: Plug-in operator unit
RMZ791: Detached operator unit
RMZ792: Bus operator unit

[2] Maximum number of option modules RMZ78x per controller

[3] 2 Relays or one 3-position

AO Analog output
DO Digital output
UI Universal inputs

Immersion temperature controller, AC 230 V, 3-position output RLE132

Compact electronic controller with immersion type temperature sensor and setting unit combined in one device. It is designed for installation directly onto the plant. Only the wires for mains connection and controller output need to be laid. Supplied with protection pocket for indirect temperature sensing.

Application:
Modulating temperature controller, with 3-position control signal and auxiliary relay. The RLE132 is ideally suited for control of the following heating plants:
- Domestic hot water temperature
- Flow temperature control
- Calorifiers or heat exchangers

Features:
- Values for both normal and reduced temperature can be set
- Setpoint changeover via external contact or time switch
- Optional legionella function
- Auxiliary digital output for heat demand
- Connection for remote setting unit
- Minimum limitation of boiler return temperature
- Minimum or maximum limitation of the return temperature
- PI control (selectable)
- Service mode

Data sheet	N3334
Operating voltage	AC 230 V
Frequency	50/60 Hz
Power consumption	4 VA
Setpoint setting range	0...130 °C
Setpoint readjustment range	0...50 K
Digital input, contact query	3...6 mA DC 6...15 V
Digital outputs, number	3
Relay outputs	Normally open contact Potential-free
Relay output, switching voltage	AC 24...250 V
Relay output, switching current	2 A
PN class	PN 10
Immersion length	150 mm
Degree of protection	IP65
Dimensions (W x H x D)	125 x 152 x 78 mm
Warranty	24 Months

Stock no.	Product no.
BPZ:RLE132	**RLE132**

RLE162

Immersion temperature controller, AC 24 V, DC 0...10 V output

Compact electronic controller with immersion type temperature sensor and setting unit combined in one device. It is designed for installation directly onto the plant. Only the wires for power supply connection and controller output need to be laid. Threaded nipple (AQE2102) for direct temperature comes with the product RLE162.

Applications:
Modulating temperature controller, with 1 or 2 continuous DC 0...10 V output signals and auxiliary relay. The RLE162 is used for control and limiting of temperature in hot water, heating or cooling plants:
- Domestic hot water temperature
- Heating flow temperature
- Closed circuit heat exchangers
- Water-side control of HVAC units
- Chilled water temperature

Features:
- High or low temperature limitation
- Auxiliary digital output
- Compensation via outside sensor
- Connection for remote setting unit
- P or PI control (selectable)
- Service modes
- Heating and cooling modes available
- Setpoint changeover via external contact or time switch
- Optional legionella function

Data sheet	N3333
Operating voltage	AC 24 V
Frequency	50/60 Hz
Power consumption	2 VA
Setpoint readjustment range	0...60 K
Setpoint setting range	-10...130 °C
Analog output, signal	DC 0...10 V
Analog output, current	1 mA
Analog input, signal	LG-Ni1000 0...1000 Ohm DC 0...10 V
Analog outputs, number	2
Digital inputs	Potential-free input signal
Digital input, contact query	3...6 mA DC 6...15 V
Digital outputs, number	1
Relay outputs	Normally open contact Potential-free
Relay output, switching voltage	AC 24...230 V
Relay output, switching current	2 A
Immersion length	130 mm
PN class	PN 10
Degree of protection	IP65
Dimensions (W x H x D)	125 x 152 x 78 mm
Warranty	24 Months

	Stock no.	Product no.
	BPZ:RLE162	**RLE162**

Accessories for RLE132 / RLE162

Product Title	Data sheet	Stock no.	Product no.
Protection pocket, 150 mm, MS63 nickel-plated, G½", PN10, LW7	N1194	BPZ:ALT-SB150	**ALT-SB150**
Outside sensor LG-Ni1000	N1811	BPZ:QAC22	**QAC22**

Application examples Synco™ 100

These are only a few examples of many applications that can be done with the with Synco™100 controllers: RLE..
More Synco™100 applications are described in “HIT“ (the HVAC project engineering tool with a library of over 300 pre-configured HVAC-applications) and in the RLE.. data sheet.

Heating Plant, Flow Temperature Control - Flow temperature control in a common distribution circuit

RLE132

H0C003 LE1 HQ

- Controller (N1) with immersion built-in sensor to control the heating flow temperature via modulating control of the mixing valve (Y1)

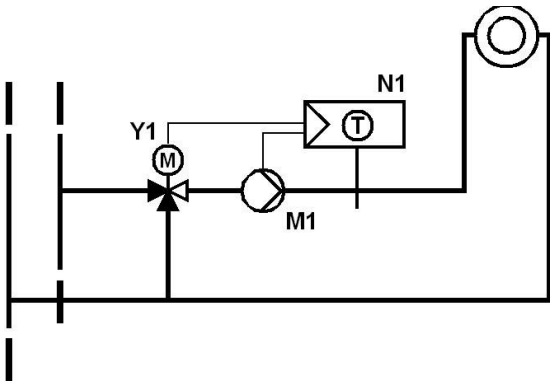

Domestic Hot Water Plant - Temperature control of domestic hot water storage via mixing valve and HWS circulation pump

RLE162

H00B01 LE1 HQ

- Controller (N1) with built-in immersion sensor to control the d.h.w. storage temperature via modulating control of the primary d.h.w. heating valve (Y1) and the circulating pump (M1).

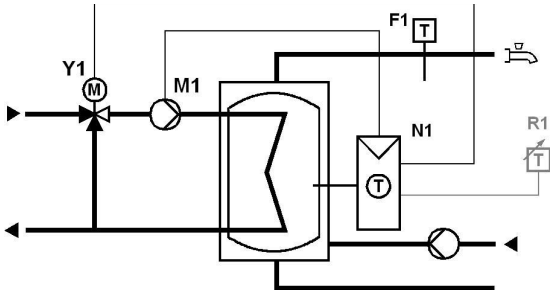

RVP201..

Heating controller with analog operating elements

Heating controllers for use in residential or smaller commercial buildings that have their own heat generation. Easy-to-understand analog operating elements for the enduser.

Key functions
Weather-compensated flow or boiler temperature control, with or without room influence or room temperature control. Control of 3- or 2-position actuators or direct control of a burner.

Additional settings
- Control of the heating pump
- Quick setback and boost heating
- Heating curve
- Room temperature influence
- Frost protection for the plant and the room
- Automatic ECO function for switching the heating system on and off depending on demand
- Maximum limitation of the flow or boiler temperature
- Pump overrun and pump kick
- Remote switching of operating mode via room unit or external switch

Operating modes
The following operating modes can be selected with the slider: Automatic/Protection, Automatic/Reduced, Setback, Normal operation and Protection.

Data sheet	N2464
Operating voltage	AC 230 V
Frequency	50 Hz
Power consumption	7 VA
Analog input, signal	LG-Ni1000 NTC 575
Relay output, switching voltage	AC 24...230 V
Relay output, switching current	2 A
Degree of protection	IP40
Dimensions (W x H x D)	144 x 96 x 115 mm

Range overview RVP201..

Product Title	Stock no.	Product no.
Heating controller without time switch	BPZ:RVP201.0	**RVP201.0**

Heating controller incl. DHW heating

RVP211..

Heating controller for use in residential or smaller commercial buildings that have their own heat generation and own DHW heating. Easy-to-understand analog operating elements for the enduser.

Key functions (same as RVP201)
Other settings (same as RVP201)

DHW heating functions
- Storage tank charging by control of a charging pump:
  - Absolute priority: Heating circuit pump remains locked during DHW charging
  - No priority (parallel): Heating circuit pump and DHW charging pump operate parallel
- Storage tank charging by control of a diverting valve
- Frost protection for DHW
- DHW temperature can be acquired via a temperature sensor or thermostat

Operating modes
The following operating modes can be selected with the slider: Automatic/Protection, Automatic/Reduced, Setback, Normal operation, Protection, or DHW heating only.

Data sheet	N2464
Operating voltage	AC 230 V
Frequency	50 Hz
Power consumption	7 VA
Analog input, signal	LG-Ni1000 NTC 575
Relay output, switching voltage	AC 24...230 V
Relay output, switching current	2 A
Degree of protection	IP40
Dimensions (W x H x D)	144 x 96 x 115 mm

Range overview RVP211..

Product Title	Stock no.	Product no.
Heating controller without time switch, with d.h.w. heating	BPZ:RVP211.0	**RVP211.0**

Accessories for RVP2..

Product Title	Data sheet	Stock no.	Product no.
Analog 24-hour time switch	N2464	BPZ:AUZ3.1	**AUZ3.1**
Analog 7-day time switch	N2464	BPZ:AUZ3.7	**AUZ3.7**

Field devices for RVP2..

Product Title	Data sheet	Stock no.	Product no.
Multifunctional room operator unit	N1637	BPZ:QAW70..	**QAW70..**
Outside sensor LG-Ni1000	N1811	BPZ:QAC22	**QAC22**
Outside sensor NTC 575 Ohm	N1811	BPZ:QAC32	**QAC32**
Strap-on temperature sensor LG-Ni1000	N1801	BPZ:QAD22	**QAD22**
Immersion temperature sensor 100 mm LG-Ni1000, with protection pocket	N1781	BPZ:QAE2120.010	**QAE2120.010**
Cable temperature sensor silicone 1.5 m, LG-Ni1000	N1831	BPZ:QAP21.3	**QAP21.3**

Application example RVP2..

These are only a few examples of many applications that can be done with the family of controllers: RVP2...
More applications are described in “HIT“ (the HVAC project engineering tool with a library of over 300 pre-configured HVAC-applications) and in the RVP2.. data sheet.

RVP201.1

H0C001 VP2 HQ b

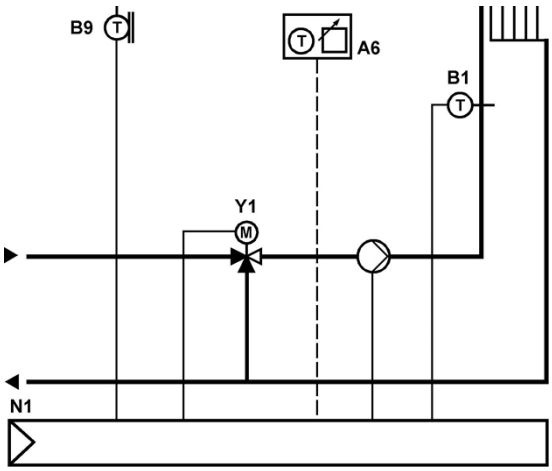

Weather-compensated heating system, one heating circuit

- Weather-compensated flow temperature control with 3-position actuator acting on mixing valve
- Frost protection for building and plant
- Time program with analog 24-hour time switch
- ECO function switches off heating depending on outside temperature
- Room temperature-dependent boost heating and quick setback (with room unit only)
- Maximum limitation of flow temperature

RVP211.1

HAAA01 VP2 HQ b

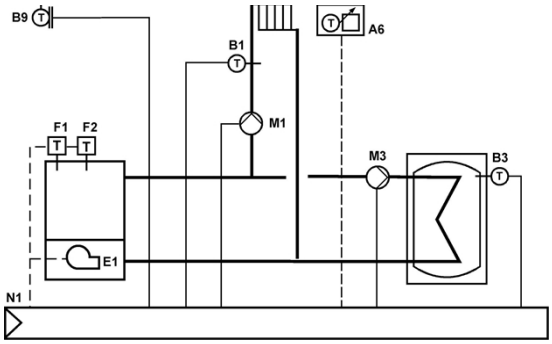

Weather-compensated heating system, heat generation, one heating circuit, d.h.w. - Weather-compensated flow temperature control acting on boiler

- Weather-compensated flow temperature control acting on boiler with single-stage burner
- Control of d.h.w. supply via pump-charged storage tank
- Frost protection for building and plant
- Time program with analog 24-hour time switch
- ECO function switches off heating depending on outside temperature

Heating controller for 1 heating circuit

RVP340

Weather-compensated flow temperature control of heating circuit with or without room influence.

Key functions:
- 2 preprogrammed plant types can be selected, with automatic assignment of the functions required for each plant type
- Weather-compensated flow temperature control through control of valve (mixing) in a heating circuit
- Weather-compensated flow temperature control through control of the 2-port valve in the primary return of a heating circuit with district heat connection (substation)

Additional functions
The RVP340 provides the following functions (no submodules or extra devices required):
- Optimum start / stop
- Quick setback and boost heating
- Automatic ECO function, depending on the outside temperature and the type of building construction
- One 7-day program with 3 heating periods per day
- Yearly time program for holidays
- Digital setting of the heating curve
- Pump kick and pump overrun
- Minimum and maximum limitation of the flow temperature
- Multifunctional outputs
- Digital input for remote control of operating mode
- Communication with other controllers via LPB data bus (RVP3.., RVL4.. and RVD2..)

Data sheet	N2545
Operating voltage	AC 230 V
Frequency	50 Hz
Power consumption	6 VA
Analog input, signal	LG-Ni1000 NTC 575
Digital inputs	Status contact
Relay output, switching voltage	AC 24...230 V
Relay output, switching current	4 x 2(2) A
Degree of protection	IP40
Dimensions (W x H x D)	144 x 96 x 109 mm
Warranty	24 Months

Stock no.	Product no.
S55370-C136	**RVP340**

RVP350

Heating controller for 1 heating circuit and d.h.w.

Weather-compensated flow temperature control of heating circuit with or without room influence, d.h.w. heating and demand based boiler temperature control.

Key functions
In addition to the functions of the RVP340, the RVP350 provides the following:
- 3 preprogrammed plant types can be selected, with automatic assignment of the functions required for each plant type
- Weather-compensated flow temperature control through control of valve (mixing) in a heating circuit
- Demand based control of the boiler temperature through control of the burner
- D.h.w. heating with charging pump, electric immersion heater and solar collector

D.h.w. control
D.h.w. control independent of the heating circuit. Control can be enabled as follows:
- According to its own 7-day program
- According to the program of the heating circuit
- According to the programs of the zone controllers on the data bus
- Permanently (24 hours a day)

D.h.w. heating features a legionella function, which can be deactivated. Legionella protection is activated once a week. The d.h.w. temperature is acquired with sensors or thermostats.

Boiler temperature control
Boiler temperature control operates as demand-dependent 2-position control. The boiler temperature is controlled through cycling of a 1- or a 2-stage burner (direct burner control). When there is no heat request, the boiler will either be shut down or maintained at the minimum temperature (selectable). Both minimum and maximum limitation of the boiler temperature are adjustable.

Data sheet	N2545
Operating voltage	AC 230 V
Frequency	50 Hz
Power consumption	7 VA
Analog input, signal	LG-Ni1000 NTC 575
Digital inputs	Status contact
Relay output, switching voltage	AC 24...230 V
Relay output, switching current	2 x 2(2) A 7 x 1(1) A
Degree of protection	IP40
Dimensions (W x H x D)	144 x 96 x 109 mm
Warranty	24 Months

Stock no.	Product no.
S55370-C137	**RVP350**

Heating controller for 2 heating circuits and d.h.w.

RVP360

Weather-compensated flow temperature control of 2 independent heating circuits with or without room influence, d.h.w. heating and demand-dependent boiler control.

Key functions
In addition to the functions of the RVP350, the RVP360 provides the following:
- 6 preprogrammed plant types can be selected, with automatic assignment of the functions required for each plant type
- Control of 2 mixing heating circuits
- Control of 1 pump heating circuit and 1 mixing heating circuit

Data sheet	N2546
Operating voltage	AC 230 V
Frequency	50 Hz
Power consumption	8 VA
Analog input, signal	LG-Ni1000 NTC 575
Relay output, switching voltage	AC 24...230 V
Relay output, switching current	2 x 2(2) A 9 x 1(1) A
Degree of protection	IP40
Dimensions (W x H x D)	144 x 96 x 109 mm
Warranty	24 Months

	Stock no.	Product no.
	S55370-C139	**RVP360**

Accessories for RVP3..

Product Title	Data sheet	Stock no.	Product no.
Front module with passiv temperature measurement, LG-Ni1000	N1408	S55720-S133	**AQR2531ANW**
Multifunctional room operator unit	N1637	BPZ:QAW70..	**QAW70..**
Outside sensor LG-Ni1000	N1811	BPZ:QAC22	**QAC22**
Outside sensor NTC 575 Ohm	N1811	BPZ:QAC32	**QAC32**
Web Server for LPB devices	N5712	BPZ:OZW672..	**OZW672..**
Strap-on temperature sensor LG-Ni1000	N1801	BPZ:QAD22	**QAD22**
Room temperature sensor LG-Ni1000	N1721	BPZ:QAA24	**QAA24**
Immersion temperature sensor 100 mm LG-Ni1000, with protection pocket	N1781	BPZ:QAE2120.010	**QAE2120.010**
Cable temperature sensor for high-temperature applications (180°C)	N1833	BPZ:QAP21.2	**QAP21.2**
Cable temperature sensor silicone 1.5 m, LG-Ni1000	N1831	BPZ:QAP21.3	**QAP21.3**
Mounting plates for front modules with passiv temperature measurement	N1408	BPZ:AQR2500..	**AQR2500..**

Service tool

Product Title	Data sheet	Stock no.	Product no.
Service tool for KNX / LPB	N5655	BPZ:OCI700.1	**OCI700.1**
Web Server for LPB devices	N5712	BPZ:OZW672..	**OZW672..**

The software (ACS790) can be downloaded for free via http://www.siemens.com/acs790.

Application examples RVP3..

These are only a few examples of many applications that can be done with the family of controllers: RVP3...
More applications are described in “HIT“ (the HVAC project engineering tool with a library of over 300 pre-configured HVAC-applications) and in the RVP3.. data sheet.

RVP340

H0C001 VP3 HQ

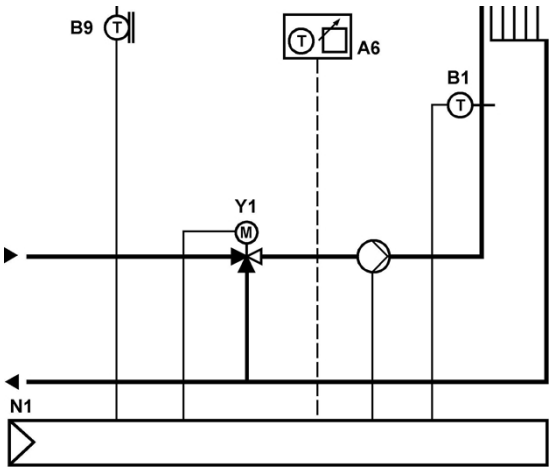

Weather-compensated heating system, one heating circuit

- Weather-compensated flow temperature control with 3-position actuator acting on mixing valve
- Frost protection for building and plant
- Digital yearly time switch
- Time switch program with 3 heating periods
- Flow temperature limit control
- ECO function switches off heating depending on outside temperature
- Room temperature-dependent boost heating and quick setback (with room unit only or with building model)

RVP350

HACA01 VP3 HQ

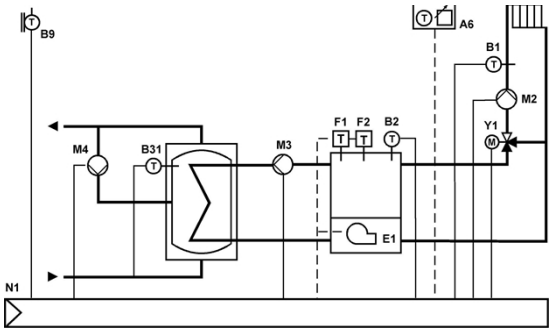

Weather-compensated heating system, heat generation, one heating circuit and d.h.w

- Weather-compensated flow temperature control with 3-point actuator acting on mixing valve
- Demand-dependend flow temperature control acting on boiler with single- or two-stage burner
- Frost protection for building and plant
- Digital yearly time switch
- 2 time switch programs, each with 3 heating periods
- Flow temperature limit control
- ECO function switches off heating depending on outside temperature
- Room temperature-dependent boost heating and quick setback (with room unit only or with building model)

RVP360

HBDA01 VP3 DE

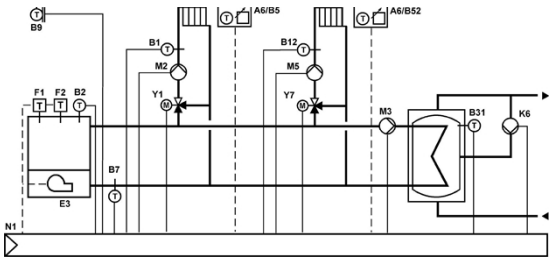

Weather-compensated heating system, heat generation, two heating circuits and d.h.w.

- Weather-compensated flow temperature control with 3-point actuator acting on mixing valve
- Demand-dependend flow temperature control acting on boiler with single- or two-stage burner
- Frost protection for building and plant
- Digital yearly time switch
- 2 time switch programs, each with 3 heating periods
- Separate time switch program for d.h.w.
- Flow temperature limit control
- ECO function switches off heating depending on outside temperature
- Room temperature-dependent boost heating and quick setback (with room unit only or with building model)

Multifunctional Heating Controllers RVL4..

Multifunctional heating controller for use in all types of residential and nonresidential buildings, configured for all standard heating applications. The RVL controllers provide weather-compensated flow temperature control and preprogrammed plant types with automatic assignment of the functions required for each type of plant.
The RVL controllers are characterized by the easy-to-understand user interface, large display and setting features:
- Analog heating curve
- Room temperature setpoint knob
- Proven operating line principle
- Setting level fo the heating engineer
- Communication facilities
- Remote operation

Operating voltage	AC 230 V
Frequency	50 Hz
Relay output, switching voltage	AC 24...230 V
Relay output, switching current	2 A
Dimensions (W x H x D)	144 x 144 x 113 mm

Heating controller for 1 heating circuit or boiler temperature control RVL480

Key functions
Weather-compensated flow temperature control, with or without room influence
6 preprogrammed plant types are provided

Plant system
- Control of a mixing valve serving a heating zone (space heating)
- Control of a burner (1- or 2-stage)
- Control of a valve in the primary return of a heating zone with district heat connection
- Demand-dependent control (precontrol) of a mixing valve / of the boiler temperature / of a heat exchanger (heat demand signal via data bus)

Additional functions
The RVL480 offers the following functions (no submodules or extra devices required):
- Display of parameters, actual values, operating states and fault status signals
- 7-day program with 3 heating periods per day
- 2 additional programs, each with 3 switching periods per day
- Automatic summer/winter changeover
- Holiday program (up to 8 holiday periods per year)
- Optimum start/stop in accordance with the heating program (with or without room influence)
- Automatic ECO function, depending on the outside temperature and the type of building construction
- Optional remote selection of operating modes (via room unit or external switch)
- Scalable DC 0...10 V output for passing on the heat request to other devices
- Quick setback and boost heating
- Preselection of flow temperature setpoint via external contact
- Minimum and maximum limitation of the flow temperature
- Minimum and maximum limitation of the return temperature (shifting / constant)
- Maximum limitation of the room temperature
- Communication with other devices via the data bus
- Limitation of the return temperature differential (DRT) for district heat applications
- Frost protection and pump protection
- Flow temperature alarm

Data sheet	N2540
Power consumption	7 VA

Stock no.	Product no.
BPZ:RVL480	**RVL480**

RVL481

Heating controller for boiler temperature control and d.h.w. heating

Key functions
Weather-compensated flow temperature control, with or without room influence, with simultaneous demand-compensated boiler and DHW control.
29 preprogrammed plant types can be selected from a combination of 6 heating applications and 5 DHW applications.

Heating circuit plant types
- Control of a mixing valve serving a heating circuit (space heating)
- Control of a burner (1- or 2-stage)
- Control of a valve in the primary return of a heating zone with district heat connection
- Demand-dependent control (precontrol) of a mixing valve / of the boiler temperature / of a heat exchanger (heat demand signal via data bus)

DHW plant types
- Charging of DHW storage tank through control of a charging pump.
- Charging of DHW storage tank through control of a mixing valve
- Charging of DHW storage tank through control of a diverting valve
- DHW heating via heat exchanger through control of a 2-port valve in the primary return
- DHW heating with electric immersion heater only
- DHW heating with solar collector

Additional functions
In addition to the functions of the RVL480, the RVL481 offers the following functions (no submodules or extra devices required):
- 2 programs for heating and DHW, each with 3 heating periods per day
- 1 multifunctional relay for switching on/off the plant according to various parameters and functions

Data sheet	N2541
Power consumption	9 VA

Stock no.	Product no.
BPZ:RVL481	**RVL481**

Heating controller for boiler temperature control for modulating or 2-stage burners with d.h.w. heating

RVL482

Key functions
Weather-compensated flow temperature control, with or without room influence, with simultaneous demand-compensated boiler and DHW control.
21 preprogrammed plant types can be selected from a combination of 5 heating applications and 4 DHW applications.

Heating circuit plant types
- Control of space heating through control of a mixing valve in the heating circuit
- Control of space heating through control of a mixing valve with simultaneous demand-dependent control of the boiler temperature
- Control of space heating through control of mixing valve and boiler, plus minimum limitation of the boiler return temperature with own mixing valve
- Demand-dependent control (precontrol) of the boiler temperature (heat demand signal via bus)
- Demand-dependent control (precontrol) of the boiler temperature with minimum limitation of the boiler return temperature via mixing valve (heat demand signal via bus)

DHW plant types
- Charging of DHW storage tank through control of a charging pump.
- Charging of DHW storage tank through control of a mixing valve
- DHW heating via heat exchanger through control of a 2-port valve in the primary return
- DHW heating through electric immersion heater only
- DHW heating with solar collector

Additional functions
In addition to the functions of the RVL480 and RVL481, the RVL482 offers the following functions:
- 2 scalable DC 0...10 V inputs for heat demand signals from external consumers
- Connection facility for solar and wind sensor (refer to chapter "Sensors")
- Control of a boiler or circulating pump
- Optional selection of circulating pump/bypass pump
- Three 7-day programs, each with 3 heating periods per day

Data sheet	N2542
Power consumption	9 VA

	Stock no.	Product no.
	BPZ:RVL482	**RVL482**

RVL479

Heating controller for a second heating circuit

Application
Heating controller for use in all types of buildings that require specific control of a second heating zone at an attractive price.

Key functions
The RVL479 operates with a partner unit, for independent weather-compensated control of a second heating zone.
1 preprogrammed heating application: Space heating via control 3-position of a mixing valve.

Additional functions
- Dedicated control of the second heating zone makes it possible to use an independent user interface for diagnostics
- Separate 7-day program with 3 heating periods per day
- Separate holiday program
- Dedicated display of parameters for the second zone (operating state and fault status signals)
- Independent optimum start/stop for the second heating zone
- Minimum and maximum limitation of the flow temperature
- Minimum limitation of the return temperature
- Maximum limitation of the room temperature
- Communication with other devices via LPB data bus
- Transmission and common usage of data (outside temperature, heat demand, alarms, etc.)
- Frost protection and pump protection

Data sheet	N2543
Power consumption	7 VA

	Stock no.	Product no.
	BPZ:RVL479	**RVL479**

Suitable partner units for RVL479

Product Title	Data sheet	Stock no.	Product no.
Heating controller for 1 heating circuit or boiler temperature control	N2540	BPZ:RVL480	**RVL480**
Heating controller for boiler temperature control and d.h.w. heating	N2541	BPZ:RVL481	**RVL481**
Heating controller for boiler temperature control for modulating or 2-stage burners with d.h.w. heating	N2542	BPZ:RVL482	**RVL482**

Field devices for RVL4..

Product Title	Data sheet	Stock no.	Product no.
Front module with passiv temperature measurement, LG-Ni1000	N1408	S55720-S133	**AQR2531ANW**
Solar sensor	N1943	BPZ:QLS60	**QLS60**
Multifunctional room operator unit	N1637	BPZ:QAW70..	**QAW70..**
Outside sensor LG-Ni1000	N1811	BPZ:QAC22	**QAC22**
Outside sensor NTC 575 Ohm	N1811	BPZ:QAC32	**QAC32**
Web Server for LPB devices	N5712	BPZ:OZW672..	**OZW672..**
Strap-on temperature sensor LG-Ni1000	N1801	BPZ:QAD22	**QAD22**
Room temperature sensor LG-Ni1000	N1721	BPZ:QAA24	**QAA24**
Immersion temperature sensor 100 mm LG-Ni1000, with protection pocket	N1781	BPZ:QAE2120.010	**QAE2120.010**
Cable temperature sensor for high-temperature applications (180°C)	N1833	BPZ:QAP21.2	**QAP21.2**
Cable temperature sensor silicone 1.5 m, LG-Ni1000	N1831	BPZ:QAP21.3	**QAP21.3**
Mounting plates for front modules with passiv temperature measurement	N1408	BPZ:AQR2500..	**AQR2500..**

Service tool

Product Title	Data sheet	Stock no.	Product no.
Service tool for KNX / LPB	N5655	BPZ:OCI700.1	**OCI700.1**
Web Server for LPB devices	N5712	BPZ:OZW672..	**OZW672..**

The software (ACS790) can be downloaded for free via http://www.siemens.com/acs790.

Multifunctional room operator unit

QAW70..

Programmable unit with display of date, time of day, room temperature, outside temperature, setting values and current 7-day program. With knob for manual setpoint readjustments and presence button for manually activating the savings program

Data sheet	N1637
Measuring range, temperature	0...32 °C
Setpoint readjustment range	±3 K
Communication	PPS
Connection cable	2-wire
Degree of protection	IP30
Dimensions (W x H x D)	97 x 143 x 41 mm

Range overview QAW70..

Product Title	Stock no.	Product no.
Multifunctional room unit, instructions in en, de, fr, it	BPZ:QAW70-A	**QAW70-A**
Multifunctional room unit, instructions in nl, sv, el, pl	BPZ:QAW70-B	**QAW70-B**

Application examples RVL4..

These are only a few examples of many applications that can be done with the family of controllers: RVL4...
More applications are described in “HIT“ (the HVAC project engineering tool with a library of over 300 pre-configured HVAC-applications) and in the RVL4.. data sheet.

RVL480

H0C001 VL4 HQ

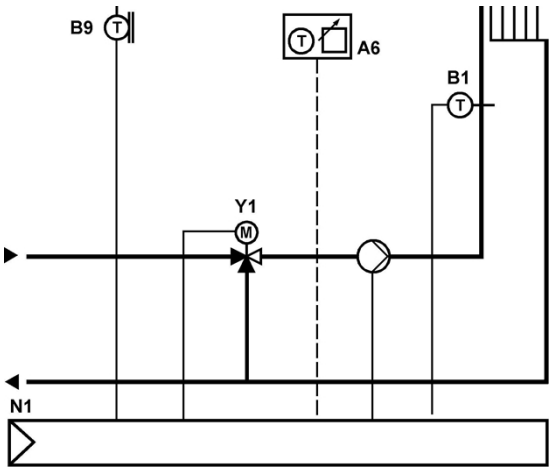

Weather-compensated heating system, one heating circuit

- Weather-compensated flow temperature control with 3-position actuator acting on mixing valve
- Frost protection for building and plant
- Digital yearly time switch
- Time switch program with 3 heating periods
- Flow temperature limit control
- ECO function switches off heating depending on outside temperature
- Room temperature-dependent boost heating and quick setback (with room unit only or with building model)
- Analog setting of heating curve

RVL482

HACB01 VL4 HQ

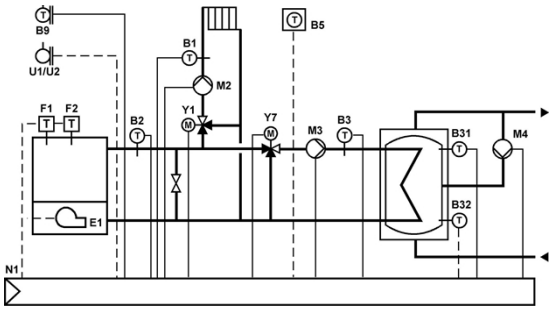

Weather-compensated heating system, heat generation, one heating circuit, d.h.w.

- Weather-compensated flow temperature control with 3-point actuator acting on mixing valve
- Demand-dependend flow temperature control acting on boiler with single- or two-stage burner
- Frost protection for building and plant
- Digital yearly time switch
- 3 time switch programs, each with 3 heating periods
- Flow temperature limit control
- ECO function switches off heating depending on outside temperature
- Room temperature-dependent boost heating and quick setback (with room unit only or with building model)
- Analog setting of heating curve and room temperature setpoint

Heating controller

RMH760B-1

- Heating controller as primary controller or main controller (district heat) or heating circuit controller
- Boiler temperature control
- Control of max. 3 heating circuits and DHW heating (7 variants available) with optional extension modules
- Tested, predefined applications (refer to Application Catalog)
- Flexible configuration
- Clear-text operation with separate operator unit (plug-in type or detached)
- Integrated KNX bus communication
- No commissioning tool required

The RMH760B-1 supports the languages: English, German, French, Italian, Spanish, Portuguese, Dutch, Danish, Finnish, Norwegian, Swedish, Polish, Czech, Hungarian, Russian, Slovak, Bulgarian, Greek, Romanian, Slovenian, Serbian, Croatian, Turkish.

Extension modules complement the heating controller and offer extra functions. They are attached to the controller via plug-in connectors. The extension modules do not operate autonomously.
The operation of the device from commissioning to enduser operation can be done via the operator unit.
Available extension modules:
- 2 heating circuit modules RMZ782B
- 1 DHW module RMZ783B
- 1 universal module RMZ787
- 2 universal modules RMZ789

A total of 4 extension modules can simultaneously be used with the heating controller.

Available operator units:
- Plug-in type operator unit RMZ790
- Detached operator unit RMZ791
- Bus operator unit RMZ792

Data sheet	N3133
Operating voltage	AC 24 V
Frequency	50/60 Hz
Power consumption	12 VA
Communication	KNX (KNX TP1)
Analog outputs, number	2
Analog output, signal	DC 0...10 V
Analog output, current	Max. 1 mA
Digital outputs, number	5
Universal inputs, number	6
Universal input, signal	T1 (PTC) Pt1000 Potential-free digital status contact NTC 575 LG-Ni1000 Digital pulse contact DC 0...10 V 2 x LG-Ni1000 1000...1175 Ohm 0...1000 Ohm
Relay outputs, number	5
Relay output, switching voltage	AC 19...250 V
Relay output, switching current	4 (3) A
Mounting	DIN rail
Degree of protection	IP20
Dimensions (W x H x D)	173 x 90 x 80 mm
Warranty	24 Months

Stock no.	Product no.
BPZ:RMH760B-1	**RMH760B-1**

RMK770-1

Boiler sequence controller

Modular heating controller with integrated control and supervisory functions for:
- Up to 6 boilers, multistage or modulating burners
- Precontrol, heating circuit
- Tested, predefined applications (refer to Application Catalog)
- Flexible configuration
- Clear-text operation with separate operator unit (plug-in type or detached)
- Integrated KNX bus communication
- No commissioning tool required

The RMK770-1 supports the languages: English, German, French, Italian, Spanish, Portuguese, Dutch, Danish, Finnish, Norwegian, Swedish, Polish, Czech, Hungarian, Russian, Slovak, Bulgarian, Greek, Romanian, Slovenian, Serbian, Croatian, Turkish.

Extension modules complement the boiler sequence controller and offer extra functions. They are attached to the controller via plug-in connectors. The extension modules do not operate autonomously. The operation of the device from commissioning to enduser operation can be done via the operator unit.
Available extension modules:
- 3 universal modules RMZ785
- 3 universal modules RMZ787
- 3 universal modules RMZ788
- 3 universal modules RMZ789

A total of 3 extension modules can simultaneously be used with the boiler sequence controller.

Available operator units:
- Plug-in type operator unit RMZ790
- Detached operator unit RMZ791
- Bus operator unit RMZ792

Data sheet	N3132
Operating voltage	AC 24 V
Frequency	50/60 Hz
Power consumption	12 VA
Communication	KNX (KNX TP1)
Analog outputs, number	2
Analog output, signal	DC 0...10 V
Analog output, current	1 mA
Digital inputs, number	2
Digital inputs	Potential-free input signal
Digital input, contact query	5 mA DC 15 V
Digital outputs, number	7
Universal inputs, number	8
Universal input, signal	T1 (PTC) Pt1000 Potential-free digital status contact LG-Ni1000 DC 0...10 V 2 x LG-Ni1000 1000...1175 Ohm 0...1000 Ohm
Relay outputs, number	7
Relay output, switching voltage	AC 19...250 V
Relay output, switching current	4 (3)A
Mounting	DIN rail
Degree of protection	IP20
Dimensions (W x H x D)	173 x 90 x 80 mm
Warranty	24 Months

Stock no.	Product no.
BPZ:RMK770-1	**RMK770-1**

Application examples RMH760B.. and RMK770..

These are only a few examples of many applications that can be done with the with Synco™700 controllers: RMH760B.. / RMK770..
More Synco™700 applications are described in “HIT“ (the HVAC project engineering tool with a library of over 300 pre-configured HVAC-applications) and in the RMH760B.. / RMK770.. data sheet.

The evaluation of the energy efficiency classification is based on EN15232:2012. For a determination of the energy efficiency classification of the application, please use the "HIT Tool".
Further details are available in the manual "Building automation - impact on energy efficiency" in our HIT Online.
www.siemens.com/hit

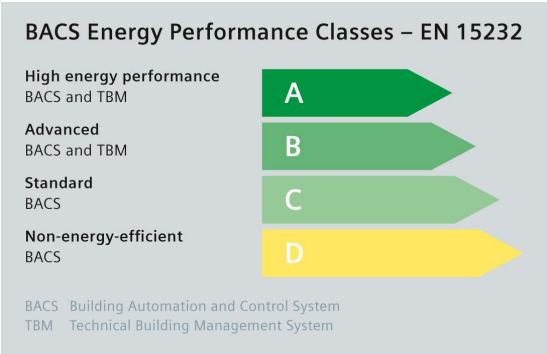

Weather-compensated heating control, one heating circuit, d.h.w.

RMH760B..

H0CB02 H6B HQ

- Weather-compensated flow temperature control with adjustable setpoints for Comfort, Precomfort, Econo-my and Protective Mode
- Frost protection for the building and the plant
- Changeover between 3 room temperature setpoints according to the time switch program
- Yearly clock
- Holiday and special day program with up to 16 periods
- 7-day program (maximum six switching points per day)
- Time switch program for the heating circuit
- Limitation of the flow temperature
- Automatic heating limit with adjustable limits
- Optimum start control
- Quick setback
- Control of the storage tank charging temperature with adjustable setpoints for Normal, Reduced, Legionella and Protective mode
- Time switch program for DHW heating

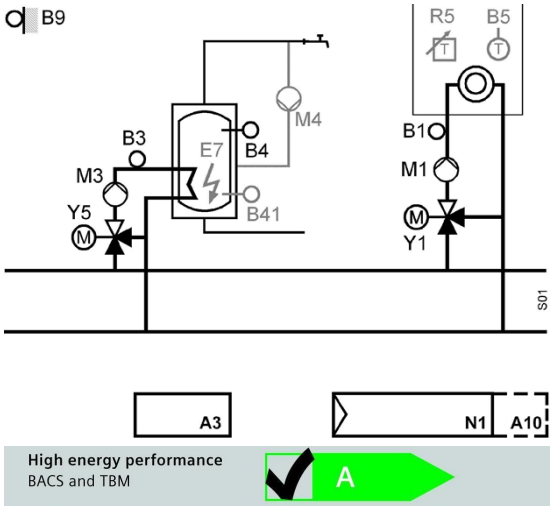

The indicated energy efficiency classification can be attained only if the following functions are implemented:

- Integrated individual room control including demand control “by occupancy, air quality, etc.” (Heating circuits for precontrol in individual room control)
- Indoor temperature control (Room temperature in individual room control via KNX requires extra configuration)
- Variable speed pump control with constant Δp (The pump must have integrated output control)
- Variable temperature depending on the load (Heat demand signal required)

To fulfill the classification, the plant must be equipped with all indicated functions.

RMH760B..

HCDA01 H6B HQ

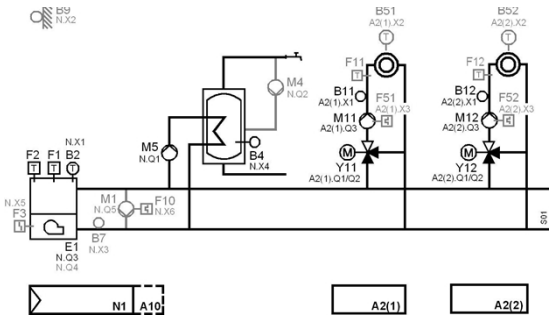

High energy performance
BACS and TBM

To fulfill the classification, the plant must be equipped with all indicated functions.

Weather-compensated heating control, heat generation, 2 heating circuits, d.h.w.

- Weather-compensated flow temperature control with adjustable setpoints for Comfort, Precomfort, Economy and Protective Mode
- Frost protection for the building and the plant
- Changeover between 3 room temperature setpoints according to the time switch program
- Yearly clock
- Holiday and special day program with up to 16 periods
- 7-day program (maximum six switching points per day)
- Time switch programs for heating circuits 1 and 2
- Limitation of the flow temperature
- Automatic heating limit with adjustable limits
- Optimum start control
- Quick setback
- Control of the storage tank temperature with adjustable setpoints for Normal, Reduced, Legionella and Protective mode
- Time switch program for DHW heating
- Demand-compensated boiler temperature control
- Protective boiler startup by reducing the consumer setpoints
- Control of a single-stage or 2-stage burner
- Control of the boiler temperature via modulating burner with DC 0...10 V control
- Burner fault contact

The indicated energy efficiency classification can be attained only if the following functions are implemented:

- Integrated individual room control including demand control “by occupancy, air quality, etc.” (Heating circuits for precontrol in individual room control)
- Indoor temperature control (Room temperature in individual room control via KNX requires extra configuration)
- Variable speed pump control with constant Δp (The pump must have integrated output control)
- enerator; Variable temperature depending on the load

Weather-compensated heating system, district heating connection, 2 heating circuits, d.h.w

RMH760B..

DADC04 H6B HQ

- Weather-compensated flow temperature control with adjustable setpoints for Comfort, Precomfort, Economy and Protective mode
- Frost protection for the building and the plant
- Changeover between 3 room temperature setpoints according to the time switch program
- Yearly clock
- Holiday and special day program with up to 16 periods
- 7-day program (maximum six switching points per day)
- Time switch programs for the heating circuits
- Control of the storage tank charging temperature with adjustable setpoints for Normal, Reduced, Legionella and Protective mode
- Time switch program for DHW heating
- Limitation of the flow temperature
- Automatic heating limit with adjustable limits
- Optimum start control
- Quick setback
- Demand-compensated primary control

The indicated energy efficiency classification can be attained only if the following functions are implemented:

- Integrated individual room control including demand control “by occupancy, air quality, etc.” (Heating circuits for precontrol in individual room control)
- Indoor temperature control (Room temperature in individual room control via KNX requires extra configuration)
- Variable speed pump control with constant Δp (The pump must have integrated output control)
- Intermittent control of emission and/or distribution, automatic control with optimum start/stop
- Generator; Variable temperature depending on the load

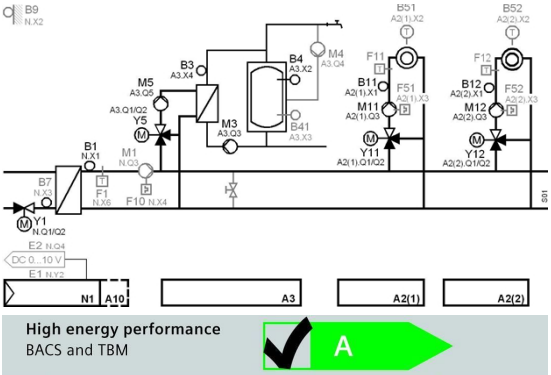

To fulfill the classification, the plant must be equipped with all indicated functions.

RMK770..

HFF003 MK7 HQ

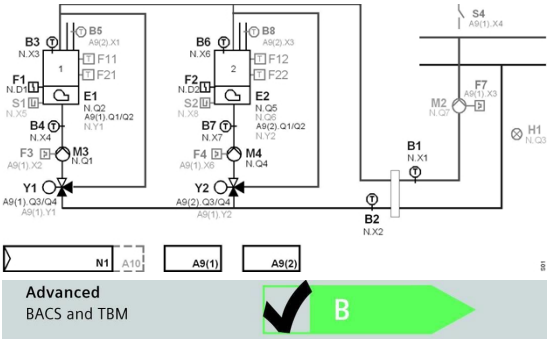

To fulfill the classification, the plant must be equipped with all indicated functions.

Dual-boiler plant, boiler pumps, boiler return with 3-port valve

- Control of the boiler sequence
- Automatic changeover of lead boiler depending on the number of boiler operating hours
- Control of the boiler pumps
- Control of the boiler temperature via modulating burner with 3-position or DC 0...10 V control
- Burner fault contact
- Limitation of the burner's minimum on time
- Controlled maintained boiler return temperature with 3-port valve and 3-position or DC 0...10 V actuator
- Protective boiler startup
- Maximum and minimum limitation of the boiler temperature
- Selection of boiler operating mode
- Flue gas measuring mode, boiler testing mode
- Burner hours run and burner startup counter
- Minimum and maximum limitation of the flow temperature
- Automatic changeover to summer operation
- (heating OFF)
- Pump overrun, pump kick
- Valve overrun, valve kick
- Acquisition and evaluation of heat requisition signals via Konnex bus

The indicated energy efficiency classification can be attained only if the following functions are implemented:

In connection with an application that fulfils the energy efficiency class B, necessary for:
- Emission control
- Control of distribution network hot watertemperature (supply or return)
- Control of distribution pumps
- Intermittent control of emission and/or distribution

Plug-in type operator unit

RMZ790

- Operator unit plugs into the Synco™ 700 controllers
- For displaying and changing plant data for service staff and enduser
- Clear-text operation
- Can be plugged in and removed during operation
- Power supply via the controller

Data sheet	N3111
Mounting	DIN rail
Warranty	24 Months

Stock no.	Product no.
BPZ:RMZ790	**RMZ790**

Detached operator unit with 3 m cable

RMZ791

Like plug-in type operator unit, but:
- Other mounting choices (typically for control panel door or wall mounting)
- Larger display
- Connection via a prefabricated 3 m cable, supplied as standard

Data sheet	N3112
Mounting	Surface mounted (plaster)
Warranty	24 Months

Stock no.	Product no.
BPZ:RMZ791	**RMZ791**

Bus operator unit

RMZ792

Communicating operator unit for operating up to 150 controllers, room units and central units from the Synco™ 700 range via KNX bus.
Favorite pages can be freely defined. Designed for fixed installation or mobile use.

Data sheet	N3113
Operating voltage	AC 24 V
Voltage supply	KNX bus
Power consumption	2.5 VA
Degree of protection	IP20
Dimensions (W x H x D)	145 x 96 x 34 mm
Warranty	24 Months

Stock no.	Product no.
BPZ:RMZ792	**RMZ792**

QAW740

Room unit with KNX bus

Configurable unit with display of operating mode, timer, temperatures and fault.

With 3 operating elements:
- Knob for setpoint readjustments
- Operating mode button
- Timer button

Data sheet	N1633
Operating voltage	DC 24 V
Voltage supply	KNX bus
Measuring range, temperature	0...45 °C
Setpoint readjustment range	-3...3 K
Communication	KNX (KNX TP1)
Connection cable	2-wire
Degree of protection	IP20
Dimensions (W x H x D)	96 x 96 x 47 mm
Weight (net)	0.22 kg
Warranty	24 Months

Stock no.	Product no.
BPZ:QAW740	**QAW740**

RMZ78..

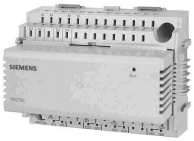

Universal modules

Additional inputs and outputs required by the Synco™ 700 controllers can be provided by these modules. A description of the functions is given with the relevant controller module.

Data sheet	N3146
Voltage supply	Supply from controller module
Power consumption	3 VA
Analog output, signal	DC 0...10 V
Analog output, current	Max. 1 mA
Universal input, signal	0...1000 Ohm 1000...1175 Ohm DC 0...10 V Potential-free digital status contact LG-Ni1000 Pt1000 T1 (PTC) 2 x LG-Ni1000
Relay outputs	switching contact, potential-free
Relay output, switching voltage	AC 19...265 V
Relay output, switching current	4 (3) A
Degree of protection	IP20
Dimensions (W x H x D)	117 × 90 × 75 mm

Range overview RMZ78..

Operating voltage [V]	Universal-inputs, number	Analog outputs, number	Relay outputs, number	Weight (net) [kg]	Stock no.	Product no.
	4	2	2	0.322	BPZ:RMZ788	**RMZ788**
AC 24	6	2	4	0.359	BPZ:RMZ789	**RMZ789**
	8	0	0	0.3	BPZ:RMZ785	**RMZ785**
	4	0	4	0.334	BPZ:RMZ787	**RMZ787**

Heating circuit module

RMZ782B

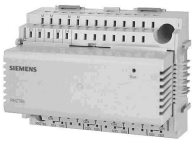

- Weather-compensated flow temperature control via heating circuit's mixing valve
- Control of heating circuit pump

The available heating circuit control and supervisory functions are the same as those of the RMH760B-1

Data sheet	N3136
Operating voltage	AC 24 V
Voltage supply	Supply from controller module
Power consumption	3 VA
Analog outputs, number	1
Analog output, signal	DC 0...10 V
Analog output, current	1 mA
Universal inputs, number	3
Universal input, signal	LG-Ni1000 0...1000 Ohm 1000...1175 Ohm DC 0...10 V Pt1000 NTC 575 2 x LG-Ni1000
Relay outputs, number	3
Relay outputs	Normally open contact Potential-free
Relay output, switching voltage	AC 19...265 V
Relay output, switching current	4 (3)A
Degree of protection	IP20
Weight (net)	0.334 kg
Dimensions (W x H x D)	117 x 90 x 75 mm
Warranty	24 Months

Stock no.	Product no.
BPZ:RMZ782B	**RMZ782B**

RMZ783B

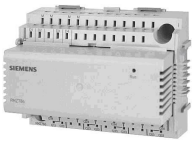

DHW module

- Control of the storage tank temperature
- Storage tank charging with integrated coil, with pump or mixing valve
- Storage tank charging with detached heat exchanger, with pump and mixing valve
- Storage tank charging according to a time program
- Control of the circulating pump according to a time program

Data sheet	N3136
Operating voltage	AC 24 V
Voltage supply	Supply from controller module
Power consumption	3 VA
Analog outputs, number	1
Analog output, signal	DC 0...10 V
Analog output, current	1 mA
Universal inputs, number	4
Universal input, signal	LG-Ni1000 0...1000 Ohm 1000...1175 Ohm DC 0...10 V Pt1000 NTC 575 2 x LG-Ni1000
Relay outputs, number	5
Relay outputs	Normally open contact Potential-free
Relay output, switching voltage	AC 19...265 V
Relay output, switching current	4 (3)A
Degree of protection	IP20
Weight (net)	0.36 kg
Dimensions (W x H x D)	117 x 90 x 75 mm
Warranty	24 Months

Stock no.	Product no.
BPZ:RMZ783B	**RMZ783B**

RMZ780

Module connector

Module connector for detached mounting of extension modules within the control panel.

Data sheet	N3138
Max. cable length	10 m
Degree of protection	IP20
Dimensions (W x H x D)	18.5 x 87.5 x 22.5 mm
Warranty	24 Months

Stock no.	Product no.
BPZ:RMZ780	**RMZ780**

Sensors, setpoint adjusters

Product Title	Data sheet	Stock no.	Product no.
Flue gas temperature sensor Pt1000	N1846	BPZ:FGT-PT1000	**FGT-PT1000**
Solar sensor	N1943	BPZ:QLS60	**QLS60**
Outside sensor LG-Ni1000	N1811	BPZ:QAC22	**QAC22**
Outside sensor NTC 575 Ohm	N1811	BPZ:QAC32	**QAC32**
Strap-on temperature sensor LG-Ni1000	N1801	BPZ:QAD22	**QAD22**
Strap-on temperature sensor with cable LG-Ni1000	N1802	BPZ:QAD26.220	**QAD26.220**
Immersion temperature sensor 100 mm LG-Ni1000, with protection pocket	N1781	BPZ:QAE2120.010	**QAE2120.010**
Immersion temperature sensur Ø 4 mm with cable and fitting	N1790	BPZ:QAE26.9..	**QAE26.9..**
Cable temperature sensor PVC 2 m, LG-Ni1000	N1831	BPZ:QAP22	**QAP22**

Monitors

Product Title	Data sheet	Stock no.	Product no.
Flow switch for use in hydraulic systems, PN10, DN32...200	N1592	BPZ:QVE1900	**QVE1900**
Flow switch for use in hydraulic systems, PN25, DN20...200	N1594	BPZ:QVE1901	**QVE1901**
Thermal reset limit thermostat	N1202	BPZ:RAK-TW.1..H	**RAK-TW.1..H**
Temperature limiter	N1206	BPZ:RAK-TB.1..M	**RAK-TB.1..M**
Safety limit thermostat	N1204	BPZ:RAK-ST..M	**RAK-ST..M**

Room units / sensors

Product Title	Data sheet	Stock no.	Product no.
Front module with passiv temperature measurement, LG-Ni1000	N1408	S55720-S133	**AQR2531ANW**
Front module for base modules, temperature (active)	N1411	S55720-S136	**AQR2532NNW**
Room temperature sensor LG-Ni1000	N1721	BPZ:QAA24	**QAA24**
Room sensor KNX for temperature, white	N1602	S55624-H103	**QMX3.P30**
Room unit with room temperature sensor and setpoint readjuster -3...3 K	N1721	BPZ:QAA27	**QAA27**
Room temperature sensor LG-Ni1000 for mounting on recessed conduit boxes	N1722	BPZ:QAA64	**QAA64**
Room unit with KNX bus	N1633	BPZ:QAW740	**QAW740**
Mounting plates for front modules with passiv temperature measurement	N1408	BPZ:AQR2500..	**AQR2500..**
Base module with KNX for temperature and humidity measurement	N1411	BPZ:AQR2570..	**AQR2570..**

Transformers

Product Title	Data sheet	Stock no.	Product no.
Transformers	N5536	BPZ:SEM62..	**SEM62..**

Service tool

Product Title	Data sheet	Stock no.	Product no.
Service tool for KNX / LPB	N5655	BPZ:OCI700.1	**OCI700.1**
USB - KNX Service interface	A6V10438951	S55800-Y101	**OCI702**
Web server for Synco devices	N5701	BPZ:OZW772..	**OZW772..**

The software (ACS790) can be downloaded for free via http://www.siemens.com/acs790.

Standalone district heating controllers
District heating controllers RVD1..

RVD12..

District heating controller

Control of district heat substations, space heating and d.h.w. heating.
Optimized for low return temperatures in district heating networks.

- 3 ready programmed and preselected plant types
- Straightforward, easy-to-understand operation
- Analog adjustment of room temperature setpoint, other adjustments with operating lines
- Display of time of day, time program, setpoints, actual values, limitations, errors, etc.
- Optional remote operation via room unit
- 2 independent switching programs each with 3 occupancy times per day
- Holiday function (via room unit)
- DRT limitation for the reduction of peak loads
- Maximum limitation of the return temperature on the primary side
- Minimum and maximum limitation of the flow temperature
- Automatic summer / winter changeover
- Automatic ECO function
- Pump protection
- Legionella function
- Frost protection function
- Automatic monitoring of sensors with alarm indication
- Relay and sensor tests, manual operation
- Locking function for district heat parameters
- Communication via Modbus
- Display with background lighting

Plant-specific
- 1 pump heating circuit, control of the flow temperature, optionally weather-compensated / weather- and room temperature-compensated / room temperature-compensated
- D.h.w. heating:
- Storage system with integrated heat exchanger and 1 storage tank sensor
- Charging pump

Data sheet	N2510
Operating voltage	AC 230 V
Frequency	50 Hz
Power consumption	5.5 VA
Analog input, signal	LG-Ni1000 NTC 575
Digital outputs	3 × AC 230 V 1(1) A 1 × AC 230 V 2(2) A
Dimensions (W x H x D)	144 x 96 x 109 mm

Range overview RVD12..

Product Title	Stock no.	Product no.
Controller, 3 programmed plant types, instructions in da, de, en, fi, fr, it, sv	S55370-C109	**RVD120-A**

District heating controller

RVD14..

Same functionality as the RVD120, but with the following extra features:
- 8 ready programmed and preselected plant types
- Solar d.h.w. heating
- D.h.w. heating with electric immersion heater
- Refill function
- Communication via Modbus

Plant-specific
- Precontrol of internal control loops
- 1 pump or mixing heating circuit, flow temperature control, optionally weather-compensated / weather- and room temperature-compensated / room temperature-compensated
- D.h.w. heating:
- Instantaneous system
- Storage tank charging system with 1 or 2 storage tank sensors
- Storage system with integrated heat exchanger
- 2 charging pumps
- Circulating pump
- Solar d.h.w. heating

Data sheet	N2510
Operating voltage	AC 230 V
Frequency	50 Hz
Power consumption	6 VA
Analog input, signal	LG-Ni1000 NTC 575 DC 0...10 V
Digital inputs, number	1
Digital inputs	Flow switch
Digital outputs	5 × AC 230 V 1(1) A 4 × AC 230 V 2(2) A
Dimensions (W x H x D)	144 x 96 x 109 mm

Range overview RVD14..

Product Title	Stock no.	Product no.
Controller, 8 programmed plant types, instructions in da, de, en, fi, fr, it, sv	S55370-C113	**RVD140-A**

Field devices for RVD1..

Product Title	Data sheet	Stock no.	Product no.
Pressure sensor for neutral and slightly aggressive liquids and gases (0...10 V)	A6V10432494	BPZ:QBE2003-P..	**QBE2003-P..**
Pressure sensor for refrigerants (0...10 V)	A6V10434676	BPZ:QBE2004-P..U	**QBE2004-P..U**
Multifunctional room operator unit	N1637	BPZ:QAW70..	**QAW70..**
Outside sensor LG-Ni1000	N1811	BPZ:QAC22	**QAC22**
Outside sensor NTC 575 Ohm	N1811	BPZ:QAC32	**QAC32**
Strap-on temperature sensor LG-Ni1000	N1801	BPZ:QAD22	**QAD22**
Immersion temperature sensor 100 mm LG-Ni1000, with protection pocket	N1781	BPZ:QAE2120.010	**QAE2120.010**
Cable temperature sensor for high-temperature applications (180°C)	N1833	BPZ:QAP21.2	**QAP21.2**
Cable temperature sensor silicone 1.5 m, LG-Ni1000	N1831	BPZ:QAP21.3	**QAP21.3**

Application examples RVD1..

These are a few examples of applications that can be done with the controllers RVD1..
More applications are described in “HIT“ (the HVAC project engineering tool with a library of over 300 pre-configured HVAC-applications) and in the RVD1.. data sheet.

RVD12..

DAAA01 VD1 HQ

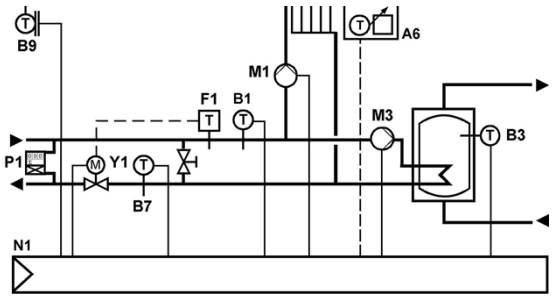

Direct system, weather-compensated heating and d.h.w.

- Weather-compensated flow temperature control with pump heating circuit
- Demand-dependend flow temperature control with 3-position actuator acting on two-port valve
- Maximum limitation of primary return temperature depending on the outside temperature
- Frost protection for building and plant
- Digital 7-day time switch
- 2 time switch programs, each with 3 heating periods
- Flow temperature limit control
- ECO function switches off heating depending on outside temperature
- Room temperature-dependent quick setback (with room sensor or with building model)
- Optional remote operation via room unit

RVD14..

DACA01 VD1 HQ

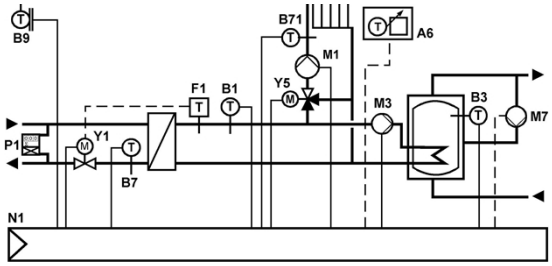

Weather-compensated flow temperature control acting on mixing circuit, d.h.w. supply with storage tank

- Demand-dependent flow temperature control with 3-position actuator acting on primary two-port valve
- Weather-compensated flow temperature control with 3-position actuator acting on mixing valve
- Maximum limitation of primary return temperature depending on the outside temperature
- Frost protection for building and plant
- Digital 7-day time switch
- 2 time switch programs, each with 3 heating periods
- Flow temperature limit control
- ECO function switches off heating depending on the outside temperature
- Room temperature-dependent quick setback (with room sensor or with building model)
- Optional remote operation via room unit

District heating controller

RVD25..

Multifunctional heating controller for use in district heating substations and district heating plants with LPB and M-bus communication. Suited for one heating circuit with d.h.w. heating in instantaneous systems or with storage tank. 28 programmed plant types. Operating voltage AC 230 V.

Key features:
- Optimized for low return temperatures in district heating networks.
- Display of time of day, time program, setpoints, actual values, limitations, errors, etc.
- Optional remote operation via room unit
- 2 independent switching programs each with 3 occupancy times per day
- Yearly clock with automatic summer- / wintertime changeover
- Power and / or volumetric flow limitation in combination with heat meter
- Pump and valve protection
- Automatic monitoring of sensors with display of alarm
- Locking function for district heat parameters
- Optional suppression of hydraulic creep
- Frost protection function
- DRT limitation for the reduction of peak loads and of idle heat
- Maximum limitation of the return temperature on the primary side
- Minimum and maximum limitation of the flow temperature
- Optimum start / stop control of the heating system
- Automatic ECO function
- Legionella function
- Forced charging function for plant with storage tank
- Cooling down protection for the primary supply lines
- Solar d.h.w. heating
- D.h.w. heating with electric immersion heater
- Refill function
- Selectable heating period

Plant-specific:
- Precontrol internal and interconnected
- 1 mixing or pump heating circuit
- D.h.w. heating with selectable priority:
  - Instantaneous systems
  - Storage charging system
  - Storage system with integrated heat exchanger
  - Circulating pump, 2 charging pumps

Data sheet	N2513
Operating voltage	AC 230 V
Frequency	50 Hz
Power consumption	5.5 VA
Communication	LPB (interconnected controller) M-bus (slave)
Analog input, signal	DC 0...10 V LG-Ni1000 NTC 575
Digital inputs, number	1
Digital inputs	Pulse transmitter Status contact
Digital outputs	1 × PWM, DC 12 V 2 × AC 230 V 2(2) A 8 × AC 230 V 1(1) A
Dimensions (W x H x D)	144 x 96 x 109 mm

Range overview RVD25..

Product Title	Stock no.	Product no.
Controller, 28 programmed plant types, instructions in de, en, fr, it, da, fi, sv	S55370-C125	**RVD250-A**

Communicating district heating controllers
District heating controllers RVD2..

RVD26..

District heating controller

Multifunctional heating controller for use in district heating substations and district heating plants with LPB and M-bus communication. Suited for 2 heating circuits with d.h.w. heating in instantaneous systems or with storage tank. 14 programmed plant types. Operating voltage AC 230 V.

Same functionality as RVD250, but with the following extra features:
- 2 heating circuits
- Without precontrol in interconnected systems
- 3 independent switching programs each with 3 occupancy times per day

Plant-specific:
- Precontrol internal control loops
- 2 heating circuits (mixing and / or pump heating circuit): Control of flow temperature, optionally weather-compensated / weather- and room temperature-compensated / room temperature-compensated
- D.h.w. heating with selectable priority:
- Instantaneous systems
- Storage charging system
- Storage system with integrated heat exchanger
- Charging pump
- Circulating pump

Data sheet	N2515
Operating voltage	AC 230 V
Frequency	50 Hz
Power consumption	6 VA
Communication	LPB (interconnected controller) M-bus (slave)
Analog input, signal	DC 0...10 V LG-Ni1000 NTC 575
Digital inputs, number	1
Digital inputs	Pulse transmitter Status contact
Digital outputs	1 × PWM, DC 12 V 2 × AC 230 V 2(2) A 8 × AC 230 V 1(1) A
Dimensions (W x H x D)	144 x 96 x 109 mm

Range overview RVD26..

Product Title	Stock no.	Product no.
Controller, 14 programmed plant types, instructions in de, en, fr, it, da, fi, sv	S55370-C129	**RVD260-A**

Sensor and room units for RVD..

Product Title	Data sheet	Stock no.	Product no.
Pressure sensor for neutral and slightly aggressive liquids and gases (0...10 V)	A6V10432494	BPZ:QBE2003-P..	**QBE2003-P..**
Pressure sensor for refrigerants (0...10 V)	A6V10434676	BPZ:QBE2004-P..U	**QBE2004-P..U**
Multifunctional room operator unit	N1637	BPZ:QAW70..	**QAW70..**
Outside sensor LG-Ni1000	N1811	BPZ:QAC22	**QAC22**
Outside sensor NTC 575 Ohm	N1811	BPZ:QAC32	**QAC32**
Web Server for LPB devices	N5712	BPZ:OZW672..	**OZW672..**
Strap-on temperature sensor LG-Ni1000	N1801	BPZ:QAD22	**QAD22**
Immersion temperature sensor 100 mm LG-Ni1000, with protection pocket	N1781	BPZ:QAE2120.010	**QAE2120.010**
Cable temperature sensor for high-temperature applications (180°C)	N1833	BPZ:QAP21.2	**QAP21.2**
Cable temperature sensor silicone 1.5 m, LG-Ni1000	N1831	BPZ:QAP21.3	**QAP21.3**

Service tool

Product Title	Data sheet	Stock no.	Product no.
Service tool for KNX / LPB	N5655	BPZ:OCI700.1	**OCI700.1**
Web Server for LPB devices	N5712	BPZ:OZW672..	**OZW672..**

The software (ACS790) can be downloaded for free via http://www.siemens.com/acs790.

Application examples RVD2..

These are a few examples of applications that can be done with the controllers RVD2...
More applications are described in “HIT” (the HVAC project engineering tool with a library of over 300 pre-configured HVAC-applications) and in the RVD2.. data sheet.

RVD25..

DACB01 VD2 HQ a

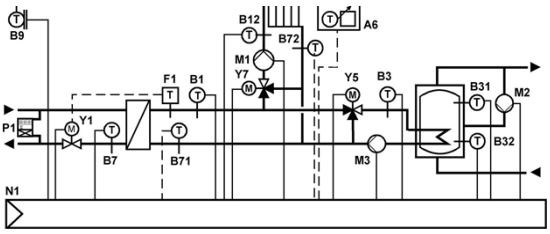

Indirect system, weather-compensated heating with mixing circuit and d.h.w

- Demand-dependent flow temperature control acting on 3-position actuator with primary two-port valve
- Weather-compensated flow temperature control with 3-position actuator acting on mixing valve
- D.h.w. temperature control - storage tank with mixing valve
- Maximum limitation of primary return temperature depending on the outside temperature
- Frost protection for building and plant
- 2 time switch programs, each with 3 heating periods
- Flow temperature limit control
- ECO function switches off heating depending on the outside temperature
- Room temperature-dependent quick setback (with room sensor only or with building model)
- Control of d.h.w. circulation pump

RVD25..

DACC01 VD2 HQ

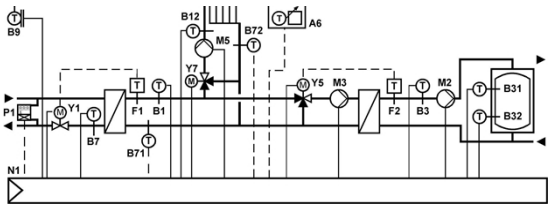

Demand-dependent control of heat exchanger with indirect district heat substation with 2-port valve

- Demand-dependent flow temperature control acting on 3-position actuator with primary two-port valve
- Weather-compensated flow temperature control with 3-position actuator acting on mixing valve
- D.h.w. temperature control - storage tank with exchanger and mixing valve
- Maximum limitation of primary return temperature depending on the outside temperature
- Frost protection for building and plant
- 2 time switch programs, each with 3 heating periods
- Flow temperature limit control
- ECO function switches off heating depending on the outside temperature
- Room temperature-dependent quick setback (with room sensor only or with building model)

RVD26..

DADA01 VD2 HQ

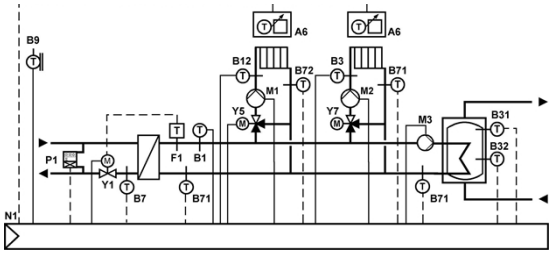

Weather-compensated flow temperature control of 2 heating circuits with mixing valves

- Demand-dependent flow temperature control with 3-position actuator acting on primary two-port valve
- Weather-compensated flow temperature control with 3-position actuator acting on mixing valve
- D.h.w. temperature control - storage tank
- Maximum limitation of primary return temperature depending on the outside temperature
- Frost protection for building and plant
- 3 time switch programs, each with 3 heating periods
- Flow temperature limit control
- ECO function switches off heating depending on the outside temperature
- Room temperature-dependent quick setback (with room sensor only or with building model)

Air duct temperature controller, AC 24 V, 2 outputs DC 0...10 V

RLM162

Compact electronic controller with integral duct mounted temperature sensor and setting unit combined in one device. It is designed for installation directly onto the plant. Only the wires for power supply connection and controller output need to be laid. Supplied complete with mounting flange.

Application:
Modulating temperature controller, with 1 or 2 continuous DC 0...10 V output signals. The RLM162 is used for control and limiting of extract or supply air temperatures in small HVAC plants:
- Restaurants, conference rooms, store rooms
- Lecture theatres, classrooms
- In conjunction with central air handling units

The following units can be controlled:
- Heating (or cooling) valve actuators
- Air damper actuators
- Step controllers or current valves for electric heating
- Signal converters
- DX cooling units

Features:
- Auxiliary digital output
- Compensation via outside sensor
- Connection for remote setting unit
- P or PI control (selectable)
- Service modes
- Heating and cooling modes available
- Setpoint changeover via external contact or time switch
- Heating/cooling changeover via external contact

Data sheet	N3332
Operating voltage	AC 24 V
Frequency	50/60 Hz
Power consumption	2 VA
Setpoint readjustment range	0...10 K
Setpoint setting range	0...50 °C
Analog input, signal	LG-Ni1000 0...1000 Ohm DC 0...10 V
Analog outputs, number	2
Analog output, signal	DC 0...10 V
Analog output, current	1 mA
Digital input, contact query	3...6 mA DC 6...15 V
Digital outputs, number	1
Relay outputs	Normally open contact Potential-free
Relay output, switching voltage	AC 24...230 V
Relay output, switching current	2 A
Probe length	400 mm
Type of fixing	Flange
Degree of protection	IP65
Dimensions (W x H x D)	125 x 152 x 78 mm
Warranty	24 Months

	Stock no.	Product no.
	BPZ:RLM162	**RLM162**

Field devices for RLM162

Product Title	Data sheet	Stock no.	Product no.
Outside sensor LG-Ni1000	N1811	BPZ:QAC22	**QAC22**

Application examples Synco™ 100

These are only a few examples of many applications that can be done with the with Synco™100 controllers: RLE..
More Synco™100 applications are described in "HIT" (the HVAC project engineering tool with a library of over 300 pre-configured HVAC-applications) and in the RLE.. data sheet.

RLM162

ADC001 LM1 HQ

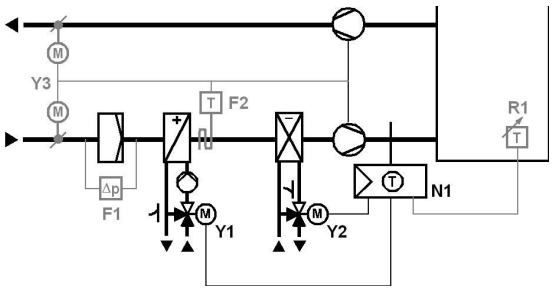

Partial Air Conditioning Plant, Heating / Cooling - Supply air temperature control

- Controller (N1) with built-in sensor to control the room temperature via sequential control of the heat-ing valve (Y1) or the cooling valve (Y2)
- Frost protection with frost thermostat F2 (indepen-dent of controller) to open the heating valve (Y1), close the outside air dampers (Y3) and deactivate the fans
- Air damper actuator with spring return (Y3) to control the fans with an auxiliary switch

RLM162

ADC001 LA1 DE

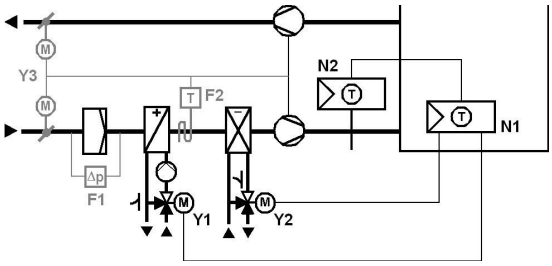

Room temperature control with limitation of supply air temperature

- Room temperature control via control of the heating valve and the cooling valve
- Limitation of supply air temperature
- Outside temperature compensation

Room temperature controller, AC 24 V, 2 outputs DC 0...10 V

RLA162

Electronic controller designed for room mounting applications. It is configurable for heating and/or cooling applications and can operate as a single controller or together with duct mounted units (RLM) for limiting.

Application:
Modulating temperature controller, with 1 or 2 continuous DC 0...10 V output signals. The RLA162 is used for control and limiting of room temperatures in small HVAC plants.

The following units can be controlled:
- Heating (or cooling) valve actuators
- Air damper actuators
- Step controllers or current valves for electric heating
- Signal converters

Features:
- Low limitation input (supply air temperature)
- Compensation via outside sensor
- Connection for remote setting unit
- P or PI control (selectable)
- Service modes
- Heating and cooling modes available
- Setpoint changeover via external contact or time switch

Data sheet	N3331
Operating voltage	AC 24 V
Frequency	50/60 Hz
Power consumption	2 VA
Setpoint readjustment range	0...10 K
Setpoint setting range	8...30 °C
Analog input, signal	LG-Ni1000 DC 0...10 V
Analog outputs, number	2
Analog output, signal	DC 0...10 V
Analog output, current	1 mA
Digital inputs	Potential-free input signal
Digital input, contact query	3...6 mA DC 6...15 V
Digital outputs, number	1
Degree of protection	IP30
Dimensions (W x H x D)	97 x 114 x 43 mm
Warranty	24 Months

	Stock no.	Product no.
	BPZ:RLA162	**RLA162**

Field devices for RLA162

Product Title	Data sheet	Stock no.	Product no.
Air duct temperature controller, AC 24 V, 2 outputs DC 0...10 V	N3332	BPZ:RLM162	**RLM162**
Outside sensor LG-Ni1000	N1811	BPZ:QAC22	**QAC22**

Standalone HVAC controllers
Universal controllers RLU..

RLU..

Universal controllers

- Tested, predefined applications
- Flexible configuration
- Suited for the controlled variables temperature, relative / absolute humidity, pressure / differential pressure, air flow rate, indoor air quality, etc.
- Autonomous sequence controllers with P, PI or PID mode
- Integrated operation
- No commissioning tool required (optional)

Data sheet	N3101
Operating voltage	AC 24 V
Frequency	50/60 Hz
Analog output, signal	DC 0...10 V
Analog output, current	Max. 1 mA
Digital input, contact query	5 mA DC 15 V
Universal input, signal	0...1000 Ohm 1000...1175 Ohm DC 0...10 V Potential-free digital status contact LG-Ni1000 Pt1000 T1 (PTC) 2 x LG-Ni1000
Relay output, switching voltage	AC 19...265 V
Relay output, switching current	4 (3) A
Degree of protection	IP20

Range overview RLU..

Digital inputs, number	Universal-inputs, number	Analog outputs, number	Relay outputs, number	Control loops, number	Stock no.	Product no.
1	4	0	2	1	BPZ:RLU202	**RLU202**
1	4	2	0	1	BPZ:RLU220	**RLU220**
1	4	2	2	2	BPZ:RLU222	**RLU222**
2	5	3	2	2	BPZ:RLU232	**RLU232**
2	5	3	6	2	BPZ:RLU236	**RLU236**

Accessories for RLU..

Product Title	Data sheet	Stock no.	Product no.
Front panel mounting frame	N3101	BPZ:ARG62.201	**ARG62.201**

Service tool

Product Title	Data sheet	Stock no.	Product no.
Service tool for KNX / LPB	N5655	BPZ:OCI700.1	**OCI700.1**

Application examples Synco™ 200

These are only a few examples of many applications that can be done with the with Synco™200 controllers: RLU..
More Synco™200 applications are described in “HIT“ (the HVAC project engineering tool with a library of over 300 pre-configured HVAC-applications) and in the RLU.. data sheet..

Partial Air Conditioning Plant, Heating / Cooling - Extract air (room) temperature control

RLU222

ADC002 LU2 HQ

- Extract air (room) temperature control via the heating coil valve and cooling coil valve in sequence
- Control of the heating coil and cooling coil pumps
- Operating mode selection Comfort / Protection

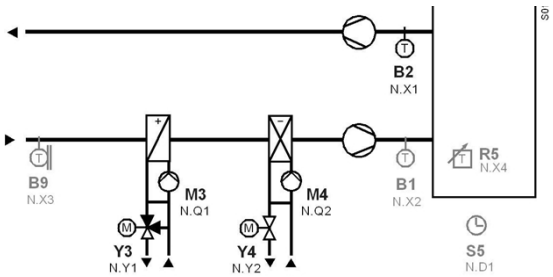

Partial Air Conditioning Plant, Heating / Cooling - Supply air temperature control with frost protection and release of fan

RLU232

ADC015 LU3 HQ

- Supply air temperature control via the heating coil valve and cooling coil valve in sequence
- Control of the heating coil and cooling coil pumps
- Fan release via relay output
- Frost protection with frost protection monitor
- Operating mode selection Comfort / Protection
- Operating mode selection Comfort/Economy

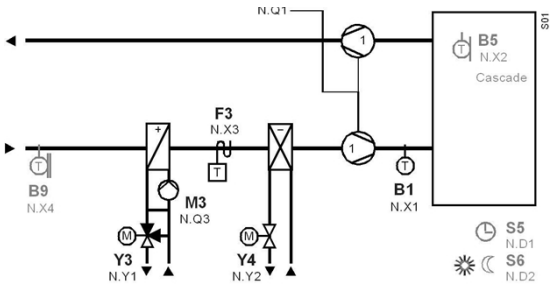

Partial Air Conditioning Plant, Heating / Cooling - Supply air (room) temperature control with frost protection and release of fan

RLU236

ADC017 LU3 HQ

- Supply air temperature control via the heating coil valve and the direct expansion evaporator in sequence
- Control of the heating coil pump
- Fan release via relay output
- Frost protection with frost protection monitor
- Operating mode selection Comfort / Protection
- Operating mode selection Comfort/Economy

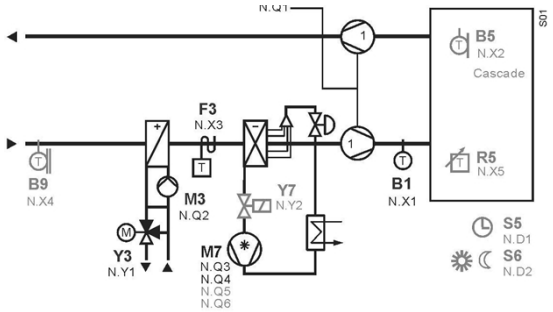

Sensors, setpoint adjusters

Product Title	Data sheet	Stock no.	Product no.
Frost detector, modulating	A6V10432020	BPZ:QAF63..J	**QAF63..J**
Pressure sensor for neutral and slightly aggressive liquids and gases (0...10 V)	A6V10432494	BPZ:QBE2003-P..	**QBE2003-P..**
Pressure sensor for refrigerants (0...10 V)	A6V10434676	BPZ:QBE2004-P..U	**QBE2004-P..U**
Differential pressure sensor, DC 0...10 V	N1910_01	BPZ:QBM2030..	**QBM2030..**
Flue gas temperature sensor Pt1000	N1846	BPZ:FGT-PT1000	**FGT-PT1000**
Immersion temperature sensor 100 mm	N1782	BPZ:QAE2164.010	**QAE2164.010**
Immersion temperature sensor 150 mm	N1782	BPZ:QAE2164.015	**QAE2164.015**
Duct temperature sensor 400 mm, LG-Ni1000	N1761	BPZ:QAM2120.040	**QAM2120.040**
Duct temperature sensor 2000 mm, LG-Ni1000	N1761	BPZ:QAM2120.200	**QAM2120.200**
Duct temperature sensor 6000 mm, LG-Ni1000	N1761	BPZ:QAM2120.600	**QAM2120.600**
Window pane temperature sensor	N1830	BPZ:QAT22	**QAT22**
Duct sensor for humidity	N1864	BPZ:QFM2100	**QFM2100**
Duct sensor for humidity and temperature	N1864	BPZ:QFM2120	**QFM2120**
Duct sensor for humidity and temperature	N1864	BPZ:QFM2160	**QFM2160**
Duct sensor for humidity (0...10 V) and temperature (0...10 V) with calibration certificate	N1883	BPZ:QFM4160	**QFM4160**
Solar sensor	N1943	BPZ:QLS60	**QLS60**
Duct sensor for air velocity	N1932	BPZ:QVM62.1	**QVM62.1**
Outside sensor LG-Ni1000	N1811	BPZ:QAC22	**QAC22**
Differential pressure sensor for liquids and gases	N1923	BPZ:QBE61.3-DP..	**QBE61.3-DP..**
Differential pressure sensors for liquids and gase (DC 0...10 V)	N1920	BPZ:QBE63-DP..	**QBE63-DP..**
Strap-on temperature sensor LG-Ni1000	N1801	BPZ:QAD22	**QAD22**
Strap-on temperature sensor with cable LG-Ni1000	N1802	BPZ:QAD26.220	**QAD26.220**
Immersion temperature sensor 100 mm LG-Ni1000, with protection pocket	N1781	BPZ:QAE2120.010	**QAE2120.010**
Immersion temperature sensor Ø 6 mm with cable and fitting	N1790	BPZ:QAE26.9	**QAE26.9**
Duct temperature sensor 400 mm, Pt1000	N1761	BPZ:QAM2112.040	**QAM2112.040**
Differential pressure sensors for liquids and gase (0...10 V)	N1922	BPZ:QBE3000..	**QBE3000..**
Immersion temperature sensor 150 mm, LG-Ni1000, with protection pocket	N1781	BPZ:QAE2120.015	**QAE2120.015**
Immersion temperature sensor 100 mm, LG-Ni1000, without protection pocket	N1781	BPZ:QAE2121.010	**QAE2121.010**
Cable temperature sensor for high-temperature applications (180°C)	N1833	BPZ:QAP21.2	**QAP21.2**
Cable temperature sensor silicone 1.5 m, LG-Ni1000	N1831	BPZ:QAP21.3	**QAP21.3**
Outside/room temperature sensor DC 0...10 V	N1814	BPZ:QAC3161	**QAC3161**
Cable temperature sensor PVC 2 m, LG-Ni1000	N1831	BPZ:QAP22	**QAP22**
Duct sensor for humidity for demanding requirements	N1882	BPZ:QFM3100	**QFM3100**
Duct air quality sensor CO_2/ temperature / rel. humidity / VOC	N1962	BPZ:QPM21..	**QPM..**
Duct sensor for humidity and temperature for demanding requirements	N1882	BPZ:QFM3160	**QFM3160**
Duct air quality sensor CO_2 / temperature / rel. humidity / VOC; Modbus	A6V11610641	BPZ:QPM21..-MO	**QPM../MO**
Duct temperature sensor	A6V12251940	BPZ:QAM16..020	**QAM16..020**

Monitors

Product Title	Data sheet	Stock no.	Product no.
Condensation monitor	A6V10741072	BPZ:QXA21..	**QXA21..**
Frost monitor, 2-point, capillary tube 3000 mm, -10...+15 °C	A6V12051788	S55700-P163	**QAF65.3AR-J**
Frost monitor, 2-point, capillary tube 6000 mm, -10...+15 °C	A6V12051788	S55700-P164	**QAF65.6AR-J**
Duct hygrostat, setpoint setting range 15...95 % r.h.	N1514	BPZ:QFM81.2	**QFM81.2**
Room hygrostat, setpoint setting range 15...95 % r.h., setpoint adjuster inside device	N1514	BPZ:QFM81.21	**QFM81.21**
Frost detector, air side, 2-point	A6V10432022	BPZ:QAF64..J	**QAF64..J**
Frost monitor, 2-point, capillary tube 3000 mm, -10...+15 °C, Reset button	A6V11965899	S55700-P161	**QAF65.3M-J**
Frost monitor, 2-point	N1284	BPZ:QAF81..	**QAF81..**
Frost monitor, 2-point, capillary tube 6000 mm, -10...+15 °C, Reset button	A6V11965899	S55700-P162	**QAF65.6M-J**

Monitors

Product Title	Data sheet	Stock no.	Product no.
Room hygrostat, setpoint setting range 30...90 % r.h., setpoint adjuster inside device	N1518	BPZ:QFA1000	**QFA1000**
Room hygrostat, setpoint setting range 30...90 % r.h., external setpoint adjustment	N1518	BPZ:QFA1001	**QFA1001**
Differential pressure monitor	N1552	BPZ:QBM81..	**QBM81..**

Room units / sensors

Product Title	Data sheet	Stock no.	Product no.
Front module with passiv temperature measurement, LG-Ni1000	N1408	S55720-S133	**AQR2531ANW**
Room air quality sensor CO_2 / temperature / rel. Humidity / VOC	N1961	BPZ:QPA20..	**QPA..**
Room sensor for humidity (DC 0...10 V) for demanding requirements	N1858	BPZ:QFA3100	**QFA3100**
Room sensor for humidity (DC 0..10V) and temperature (DC 0..10V) with calibration certificate	N1859	BPZ:QFA4160	**QFA4160**
Room unit with room temperature sensor and setpoint adjuster	N1721	BPZ:QAA25	**QAA25**
Indoor air quality controller with integrated VOC sensor for mixed gas	N1571	BPZ:QPA84	**QPA84**
Room sensor for humidity (DC 0...10 V) and temperature (DC 0...10 V) for demanding requirements	N1858	BPZ:QFA3160	**QFA3160**
Room temperature sensor LG-Ni1000	N1721	BPZ:QAA24	**QAA24**
Room sensor for humidity (DC 0...10 V)	N1857	BPZ:QFA2000	**QFA2000**
Room sensor for humidity (DC 0...10 V) and temperature (LG-Ni1000)	N1857	BPZ:QFA2020	**QFA2020**
Room unit with room temperature sensor and setpoint readjuster -3...3 K	N1721	BPZ:QAA27	**QAA27**
Room sensor for humidity (DC 0...10 V) and temperature (DC 0...10 V)	N1857	BPZ:QFA2060	**QFA2060**
Room temperature sensor LG-Ni1000 for mounting on recessed conduit boxes	N1722	BPZ:QAA64	**QAA64**
Room hygrostat, setpoint setting range 30...90 % r.h., setpoint adjuster inside device	N1518	BPZ:QFA1000	**QFA1000**
Room hygrostat, setpoint setting range 30...90 % r.h., external setpoint adjustment	N1518	BPZ:QFA1001	**QFA1001**
Mounting plates for front modules with passiv temperature measurement	N1408	BPZ:AQR2500..	**AQR2500..**

Step switches, signal converters, transformers and display

Product Title	Data sheet	Stock no.	Product no.
Transformers	N5536	BPZ:SEM62..	**SEM62..**
Universal digital indicator	N5312	BPZ:BAU200	**BAU200**
Current valve	N4938	S55376-C160	**SEA45.5**
Digital time switch, 1-channel, with 7-day program	N5243	BPZ:SEH62.1	**SEH62.1**
Signal converter DC 0...10 V or DC 0 / 10 V in AC 0 / 24 V	N5102	BPZ:SEM61.4	**SEM61.4**
Variable Speed Drive for pumps and fans, IP55, Filter B (C1)	N5111	BPZ:G120P..AM..B..	**G120P..5B**
Variable Speed Drive for pumps and fans, IP55, Filter A (C2)	N5111	BPZ:G120P..AM..A..	**G120P..5A**
Variable Speed Drive for pumps and fans, IP20, Filter B (C1)	N5111	BPZ:G120P..AE..B..	**G120P..2B**
Variable Speed Drive for pumps and fans, IP20, Filter A (C2)	N5111	BPZ:G120P..AE..A..	**G120P..2A**
Signal converter with preprogrammed applications	N5146	BPZ:SEZ220	**SEZ220**

Standalone HVAC controllers
Universal controllers RWD..

RWD Universal..

Universal controller for HVAC systems

Universal controller with P or PI action for heating, ventilation and air conditioning.

Auxiliary functions
- PI limiter function (absolute and relative limit)
- Remote setpoint
- Setpoint compensation
- Winter/summer mode changeover (analogue or digital input)
- Cascade control
- Maximum priority for cooling / dehumidifying

Frequency	50/60 Hz
Digital inputs	Potential-free input signal
Universal inputs, number	2
Universal input, signal	LG-Ni1000 DC 0...10 V Pt1000
Degree of protection	IP20

Range overview RWD..

Operating voltage [V]	Analog outputs, number	Relay outputs, number	Control loops, number	Stock no.	Product no.
AC 24	2		1	BPZ:RWD62	**RWD62**
AC 24	1	1	1	BPZ:RWD68	**RWD68**
AC 24		2	1	BPZ:RWD82	**RWD82**

RWD60

Universal Controller, 1 Analog Output

Warranty	24 Months

Stock no.	Product no.
S55370-C135	**RWD60**

Field devices for RWD..

Product Title	Data sheet	Stock no.	Product no.
Front module with passiv temperature measurement, LG-Ni1000	N1408	S55720-S133	**AQR2531ANW**
Duct temperature sensor 400 mm, LG-Ni1000	N1761	BPZ:QAM2120.040	**QAM2120.040**
Thermal reset limit thermostat, 40...120 °C, protective pocket 100 mm, capillary tube 700 mm, clamping band	N1202	S55700-P117	**RAK-TW.1200B-H**
Switching and monitoring device	N3124	S55370-C100	**RMS705B-1**
Outside sensor LG-Ni1000	N1811	BPZ:QAC22	**QAC22**
Room temperature sensor LG-Ni1000	N1721	BPZ:QAA24	**QAA24**
Mounting plates for front modules with passiv temperature measurement	N1408	BPZ:AQR2500..	**AQR2500..**

Accessories for RWD..

Product Title	Data sheet	Stock no.	Product no.
Transformers	N5536	BPZ:SEM62..	**SEM62..**

Application examples RWD..

These are only a few examples of many applications that can be done with the with controllers RWD..
More applications are described in “HIT” (the HVAC project engineering tool with a library of over 300 pre-configured HVAC-applications) and in the RWD.. data sheet.

Return air temperature control

RWD62

ADA002 WC6 HQ a

- Room temperature control by modulating the heater battery valve
- Frost protection with frost protection thermostat (independent of controller) when tripped, heater battery valve fully opens, dampers close, fan switches off

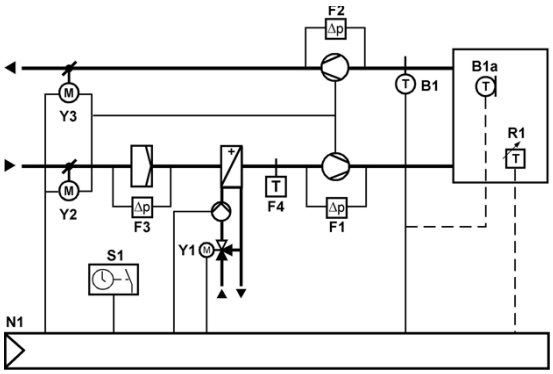

Return air temperature control

RWD62

ADC003 WC6 HQ a

- Return air temperature control by modulating the heater battery valve and the cooler battery valve in sequence
- Frost protection with frost protection thermostat (independent of controller): when tripped, heater battery valve fully opens, supply and extract fans switch off, outside air and extract air dampers close
- Use of an external time switch to provide day/night settings
- Summer compensation

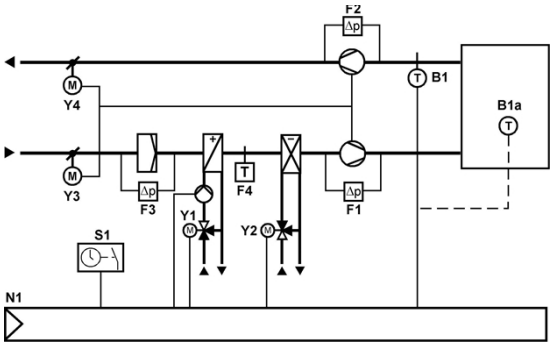

RMU7..0B-1

Universal controller

- Universal controllers with integrated control and supervisory functions
- Suited for the controlled variables temperature, relative / absolute humidity, pressure / differential, air flow rate, indoor air quality, etc.
- Autonomous sequence controllers with P, PI or PID mode
- Tested, predefined applications (refer to Application Catalog)
- Flexible configuration
- Clear-text operation with separate operator unit (plug-in type or detached)
- Integrated KNX bus communication
- No commissioning tool required

The RMU7..0B-1 supports the languages: English, German, French, Italian, Spanish, Portuguese, Dutch, Danish, Finnish, Norwegian, Swedish, Polish, Czech, Hungarian, Russian, Slovak, Bulgarian, Greek, Romanian, Slovenian, Serbian, Croatian, Turkish, Chinese.

Extension modules complement the universal controller and offer extra functions. They are attached to the controller via plug-in connectors. The extension modules do not operate autonomously.
The operation of the device from commissioning to enduser operation can be done via the operator unit.
Available extension modules:
- 1 universal module RMZ785
- 2 universal modules RMZ787
- 2 universal modules RMZ788

A total of 4 extension modules can simultaneously be used with the universal controller.

Available operator units:
- Plug-in type operator unit RMZ790
- Detached operator unit RMZ791
- Bus operating unit RMZ792

Data sheet	N3150
Operating voltage	AC 24 V
Frequency	50/60 Hz
Power consumption	12 VA
Communication	KNX (KNX TP1)
Analog output, signal	DC 0...10 V
Analog output, current	Max. 1 mA
Universal input, signal	LG-Ni1000 T1 (PTC) Pt1000 0...1000 Ohm 1000...1175 Ohm DC 0...10 V Digital pulse contact Potential-free digital status contact 2 x LG-Ni1000
Relay output, switching voltage	AC 19...250 V
Relay output, switching current	4 (3) A
Degree of protection	IP20
Dimensions (W x H x D)	173 x 90 x 80 mm

Range overview RMU7..0B..

Analog outputs, number	Universal-inputs, number	Relay outputs, number	Control loops, number	Stock no.	Product no.
2	6	2	1	BPZ:RMU710B-1	**RMU710B-1**
3	8	4	2	BPZ:RMU720B-1	**RMU720B-1**
4	8	6	3	BPZ:RMU730B-1	**RMU730B-1**

Application examples RMU710B..

These are only a few examples of many applications that can be done with the with Synco™700 controllers: RMU710B..
More Synco™700 applications are described in “HIT“ (the HVAC project engineering tool with a library of over 300 pre-configured HVAC-applications) and in the RMU710B.. data sheet.

The evaluation of the energy efficiency classification is based on EN15232:2012. For a determination of the energy efficiency classification of the application, please use the "HIT Tool".
Further details are available in the manual "Building automation - impact on energy efficiency" in our HIT Online.
www.siemens.com/hit

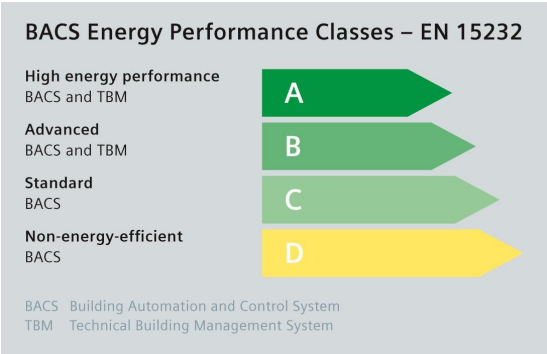

Ventilation Plant, Heating - Room-supply air temperature cascade control

ADA001 U1B HQ

- 7-day time switch with holiday / special day program
- Control of a 2-speed fan
- Control of the supply air temperature via the heating coil valve
- Frost protection with frost protection monitor
- Supervision of the supply and extract air fans with differential pressure sensors
- Supervision of the supply air filter with a differential pressure sensor

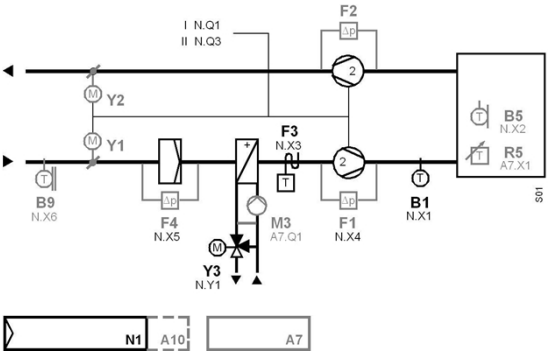

Ventilation Plant, Cooling - Room-supply air temperature cascade control

ADB001 U1B HQ

- 7-day time switch with holiday / special day program
- Control of a 2-speed fan
- Control of the supply air temperature via the cooling coil valve
- Supervision of the supply and extract air fans with differential pressure sensors
- Supervision of the supply air filter with a differential pressure sensor

The indicated energy efficiency classification can be attained only if the following functions are implemented:

- Air flow control at the room level on demand (Air quality sensor must be integrated as an additional feature)
- Air flow control at the air handler level (Automatic fan step switching corresponds to Efficiency Class B / Step 2 must be switched based on air quality)
- Free mechanical cooling (Outside air temperature and room temperature sensor required)
- Supply temperature control, variable set point with load dependant compensation
- Humidity control (Not applicable, as no humidity control)

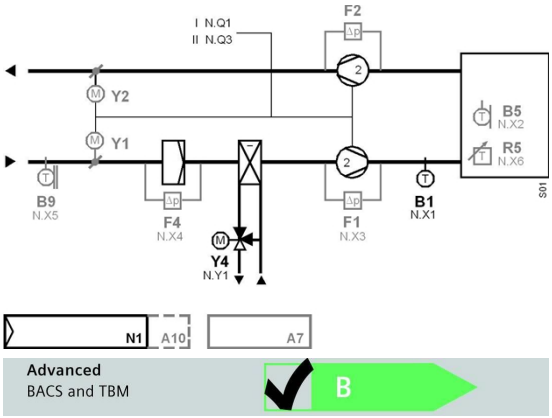

To fulfill the classification, the plant must be equipped with all indicated functions.

ADC001 U1B HQ

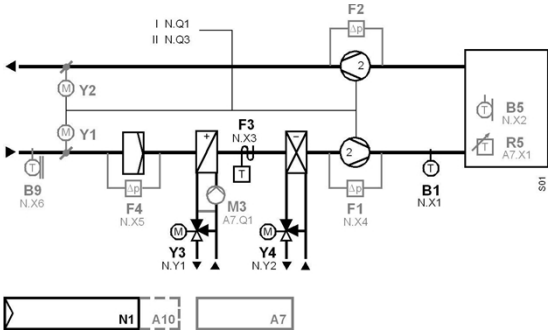

Partial Air Conditioning Plant, Heating / Cooling - Room-supply air temperature cascade control

- 7-day time switch with holiday / special day program
- Control of a 2-speed fan
- Control of the supply air temperature via the heating coil valve and the cooling coil valve in sequence
- Frost protection with frost protection monitor
- Supervision of the supply and extract air fans with differential pressure sensors
- Supervision of the supply air filter with a differential pressure sensor

AEA001 U1B DE

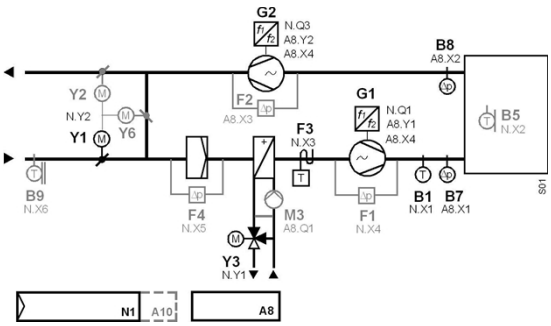

High energy performance
BACS and TBM

To fulfill the classification, the plant must be equipped with all indicated functions.

Ventilation Plant, Heating

- 7-day time switch with holiday / special day program
- Control of a variable-speed fan
- Control of the supply air temperature via the mixed air dampers and the heating coil valve in sequence
- Frost protection with frost protection monitor
- Supervision of the supply and extract air fans with differential pressure sensors
- Supervision of the supply air filter with a differential pressure sensor

The indicated energy efficiency classification can be attained only if the following functions are implemented:

- Air flow control at the room level, demand control
- Air flow control at the air handler level, automatic flow or pressure control with or without pressure reset
- With heat exchanger overheating control
- Free mechanical cooling (Not applicable due to lack of cooling sequence)
- Humidity control (Not applicable, as no humidity control)
- Home automation / building automation and control system and technical home/building management required satisfying Efficiency Class A

Ventilation Plant, Heating - Room-supply air temperature cascade control

ADAE01 U1B HQ

- 7-day time switch with holiday / special day program
- Control of a 2-speed fan
- Control of the supply air temperature via the heat recovery system and the heating coil valve in sequence
- Frost protection with frost protection monitor
- Supervision of the supply and extract air fans with differential pressure sensors
- Supervision of the supply and extract air filters with differential pressure sensors

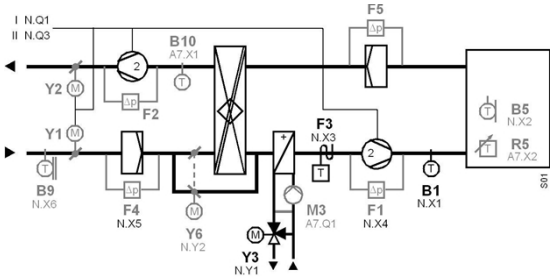

To fulfill the classification, the plant must be equipped with all indicated functions.

The indicated energy efficiency classification can be attained only if the following functions are implemented:

- Air flow control at the room level, demand control (Air quality sensor must be integrated as an additional feature)
- Air flow control at the air handler level, automatic flow or pressure control with or without pressure reset (Automatic fan step switching corresponds to Efficiency Class B / Step 2 must be switched based on air quality)
- Heat exchanger defrost control (Exhaust air temperature sensor required)
- Heat exchanger overheating control
- Supply Temperature control (Variable set point with load dependant compensation)

Application examples RMU720B..

These are only a few examples of many applications that can be done with the with Synco™700 controllers: RMU720B..
More Synco™700 applications are described in “HIT“ (the HVAC project engineering tool with a library of over 300 pre-configured HVAC-applications) and in the RMU720B.. data sheet.

The evaluation of the energy efficiency classification is based on EN15232:2012. For a determination of the energy efficiency classification of the application, please use the "HIT Tool".
Further details are available in the manual "Building automation - impact on energy efficiency" in our HIT Online.
www.siemens.com/hit

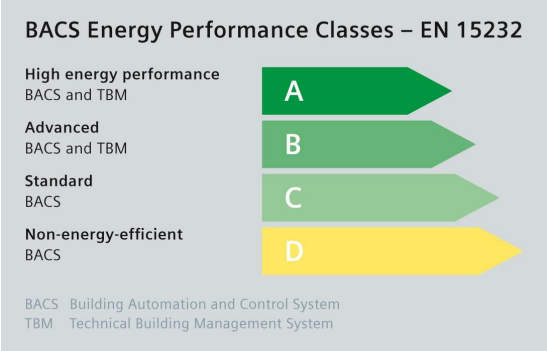

AEC001 U2B DE

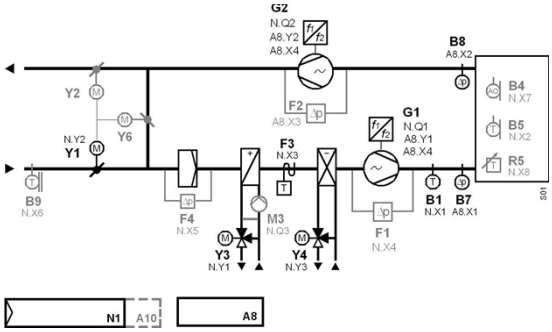

To fulfill the classification, the plant must be equipped with all indicated functions.

Partial Air Conditioning Plant, Heating / Cooling

- 7-day time switch with holiday / special day program
- Control of a variable-speed fan
- Control of the supply air temperature via the mixed air dampers, the heating coil valve and cooling coil valve in sequence
- Frost protection with frost protection monitor
- Supervision of the supply and extract air fans with differential pressure sensors
- Supervision of the supply air filter with a differential pressure sensor
- Home automation / building automation and control system and technical home/building management required satisfying Efficiency Class A

The indicated energy efficiency classification can be attained only if the following functions are implemented:

- Air flow control at the room level, demand control
- Air flow control at the air handler level, automatic flow or pressure control with or without pressure reset
- With heat exchanger overheating control
- Free mechanical cooling (Outside air temperature and room temperature sensor required)
- Supply temperature control, variable set point with load dependant compensation

ADCE01 U2B HQ

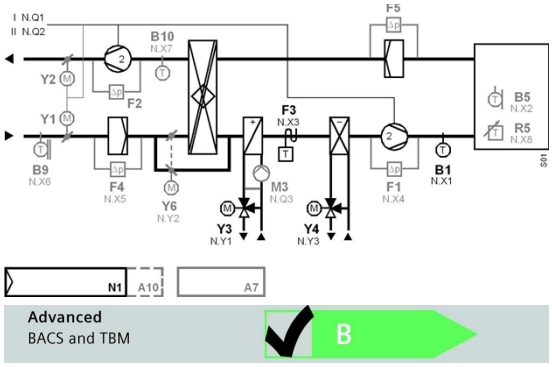

To fulfill the classification, the plant must be equipped with all indicated functions.

Partial Air Conditioning Plant, Heating / Cooling - Room-supply air temperature cascade control

- 7-day time switch with holiday / special day program
- Control of a 2-speed fan
- Control of the supply air temperature via the heating coil valve and the cooling coil valve in sequence
- Frost protection with the frost protection monitor
- Supervision of the supply and extract air fans with differential pressure sensors
- Supervision of the supply and extract air filter with a differential pressure sensor

The indicated energy efficiency classification can be attained only if the following functions are implemented:

- Air flow control at the room level, demand control (Air quality sensor must be integrated as an additional feature)
- Air flow control at the air handler level, automatic flow or pressure control with or without pressure reset (Automatic fan step switching corresponds to Efficiency Class B / Step 2 must be switched based on air quality)
- Heat exchanger defrost control (Exhaust air temperature sensor required)
- With heat exchanger overheating control
- Free mechanical cooling (Outside air temperature and room temperature sensor required)
- Supply Temperature control, variable set point with load dependant compensation

Partial Air Conditioning Plant, Heating / Cooling / Humidifying - Room-supply air temperature cascade and humidity control

ADFB01 U2B HQ

- 7-day time switch with holiday / special day program
- Control of a 2-speed fan
- Control of the supply air temperature via the heating coil valve and cooling coil valve in sequence
- Control of room humidity via the air humidifier (on command and modulating positioning signal)
- Frost protection with frost protection monitor
- Supervision of the supply and extract air fans with differential pressure sensors
- Supervision of the supply air filter with differential pressure sensors
- Limitation of supply air humidity

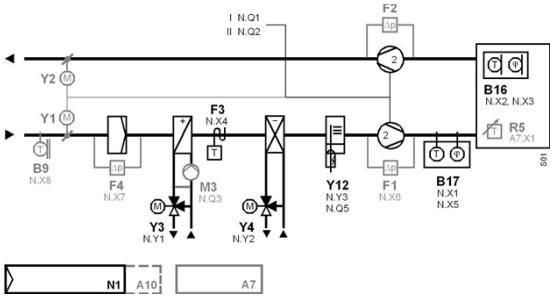

Partial Air Conditioning Plant, Heating / Humidifying - Room-supply air temperature cascade and humidity control

AEDB01 U2B HQ

- 7-day time switch with holiday / special day program
- Control of a 2-speed fan
- Control of the supply air temperature via the mixed air dampers and the heating coil valve in sequence
- Control of room humidity via the air humidifier (on command and modulating positioning signal)
- Frost protection with frost protection monitor
- Supervision of the supply and extract air fans with differential pressure sensors
- Supervision of the supply air filter with a differential pressure sensor
- Limitation of supply air humidity

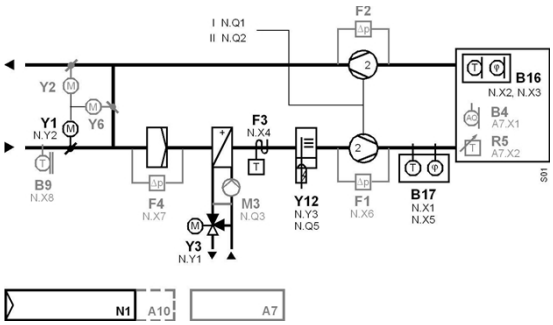

The indicated energy efficiency classification can be attained only if the following functions are implemented:

- Air flow control at the room level, demand control (Air quality sensor required)
- Air flow control at the air handler level, automatic flow or pressure control with or without pressure reset (Automatic fan step switching corresponds to Efficiency Class B / Step 2 must be switched based on air quality)
- With heat exchanger overheating control
- Supply Temperature control, variable set point with load dependant compensation
- Room or exhaust air humidity control

To fulfill the classification, the plant must be equipped with all indicated functions.

ADDP01 U2B HQ

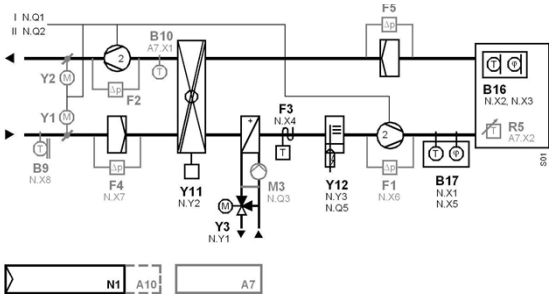

To fulfill the classification, the plant must be equipped with all indicated functions.

Partial Air Conditioning Plant, Heating / Humidifying - Room-supply air temperature cascade and humidity control

- 7-day time switch with holiday / special day program
- Control of a 2-speed fan
- Control of the supply air temperature via the heat recovery system and the heating coil valve in sequence
- Control of room humidity via the air humidifier (on command and modulating positioning signal)
- Frost protection with frost protection monitor
- Supervision of the supply and extract air fans with differential pressure sensors
- Supervision of the supply and extract air filters with differential pressure sensors
- Limitation of supply air humidity

The indicated energy efficiency classification can be attained only if the following functions are implemented:

- Air flow control at the room level, demand control (Air quality sensor must be integrated as an additional feature)
- Air flow control at the air handler level, automatic flow or pressure control with or without pressure reset (Automatic fan step switching corresponds to Efficiency Class B / Step 2 must be switched based on air quality)
- Heat exchanger defrost control (Exhaust air temperature sensor required)
- With heat exchanger overheating control
- Supply Temperature control, variable set point with load dependant compensation
- Room or exhaust air humidity control

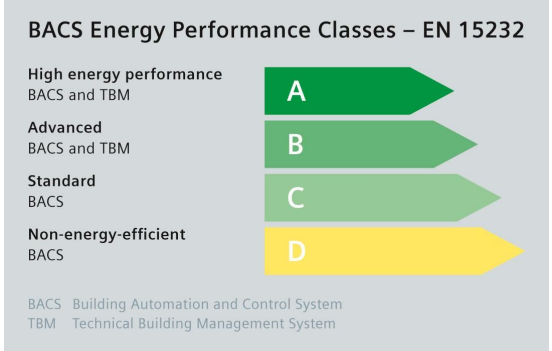

Application examples RMU730B..

These are only a few examples of many applications that can be done with the with Synco™700 controllers: RMU730B..
More Synco™700 applications are described in “HIT” (the HVAC project engineering tool with a library of over 300 pre-configured HVAC-applications) and in the RMU730B.. data sheet.

The evaluation of the energy efficiency classification is based on EN15232:2012. For a determination of the energy efficiency classification of the application, please use the "HIT Tool".
Further details are available in the manual "Building automation - impact on energy efficiency" in our HIT Online.
www.siemens.com/hit

Partial Air Conditioning Plant, Heating / Cooling / Humidifying - Room-supply air temperature cascade and humidity control

AEFB01 U3B HQ

- 7-day time switch with holiday / special day program
- Control of a 2-speed fan
- Control of the supply air temperature via the mixed air dampers, the heating coil valve and cooling coil valve in sequence
- Control of room humidity via the air humidifier (on command and modulating positioning signal)
- Frost protection with frost protection monitor
- Supervision of the supply and extract air fans with differential pressure sensors
- Supervision of the supply air filter with a differential pressure sensor
- Limitation of supply air humidity

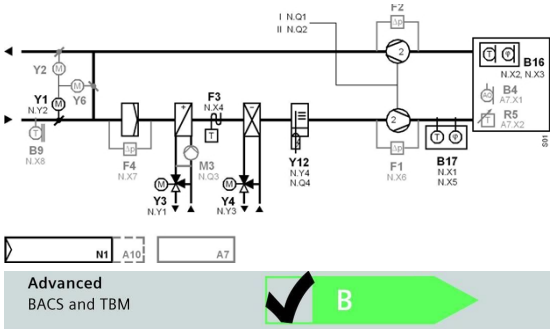

To fulfill the classification, the plant must be equipped with all indicated functions.

The indicated energy efficiency classification can be attained only if the following functions are implemented:

- Air flow control at the room level, demand control (Air quality sensor required)
- Air flow control at the air handler level, automatic flow or pressure control with or without pressure reset (Automatic fan step switching corresponds to Efficiency Class B / Step 2 must be switched based on air quality)
- With heat exchanger overheating control
- Free mechanical cooling (Outside air temperature and room temperature sensor required)
- Supply Temperature control, variable set point with load dependant compensation
- Room or exhaust air humidity control

Air Conditioning Plant, Heating / Cooling / Humidifying / De-humidifying - Room-supply air temperature cascade and humidity control

ADFP01 U3B HQ

- 7-day time switch with holiday / special day program
- Control of a 2-speed fan
- Control of the supply air temperature via the heat recovery system, the heating coil valve and cooling coil valve in sequence
- Control of room humidity via the air humidifier (on command and modulating positioning signal)
- Frost protection with frost protection monitor
- Supervision of the supply and extract air fans with differential pressure sensors
- Supervision of the supply and extract air filters with differential pressure sensors
- Limitation of the supply air humidity

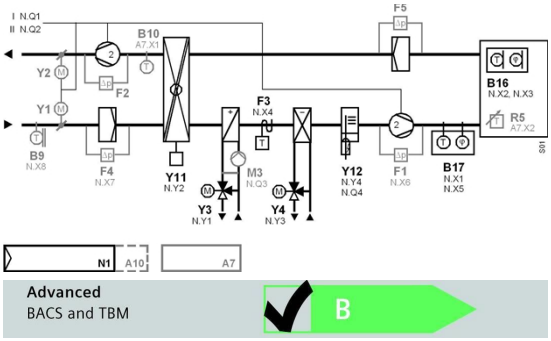

To fulfill the classification, the plant must be equipped with all indicated functions.

The indicated energy efficiency classification can be attained only if the following functions are implemented:

- Air flow control at the room level, demand control (Air quality sensor must be integrated as an additional feature)
- Air flow control at the air handler level, automatic flow or pressure control with or without pressure reset (Automatic fan step switching corresponds to Efficiency Class B / Step 2 must be switched based on air quality)
- Heat exchanger defrost control (Exhaust air temperature sensor required)
- With heat exchanger overheating control
- Free mechanical cooling (Outside air temperature and room temperature sensor required)
- Supply Temperature control, variable set point with load dependant compensation
- Room or exhaust air humidity control

Air Conditioning Plant, Heating / Cooling / Humidifying / De-humidifying - Room-supply air temperature cascade and humidity control

ADZA01 U3B HQ

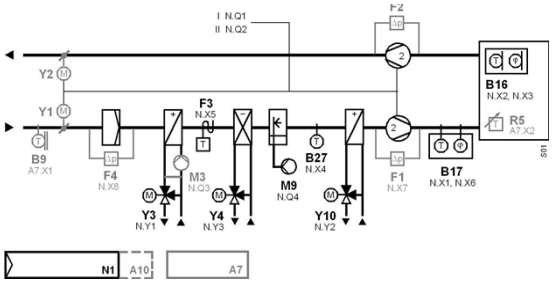

- 7-day time switch with holiday / special day program
- Control of a 2-speed fan
- Room (extract air)-supply air temperature cascade control with minimum and maximum limitation of the supply air temperature
- Control of the supply air temperature via the reheater valve and the cooling coil valve in sequence
- Control of the dewpoint temperature via the preheater valve and the cooling coil valve in sequence
- Control of room humidification via the air humidifier (on command)
- Control of room dehumidification by changing the outputs of dewpoint temperature control
- Frost protection with frost protection monitor
- Supervision of the supply and extract air fans with differential pressure sensors
- Supervision of the supply air filter with a differential pressure sensor
- Limitation of supply air humidity by shutting down the preheater and by switching off the air humidifier in sequence

Air Conditioning Plant, Heating / Cooling / Humidifying / Dehumidifying

AEZH01 U3B DE

- 7-day time switch with holiday / special day program
- Control of variable speed fan
- Room (extract air)-supply air temperature cascade control with minimum and maximum limitation of the supply air temperature
- Control of the supply air temperature via the mixed air dampers, the reheater valve and cooling coil valve in sequence
- Control of the dewpoint temperature via the mixed air dampers, the preheater valve and cooling coil valve in sequence
- Control of room humidification via the air humidifier (on command)
- Control of room dehumidification by changing the outputs of dewpoint temperature control
- Frost protection with frost protection monitor
- Supervision of the supply and extract air fans with differential pressure sensors
- Supervision of the supply air filter with a differential pressure sensor
- Limitation of supply air humidity

The indicated energy efficiency classification can be attained only if the following functions are implemented:

- Air flow control at the room level, demand control
- Air flow control at the air handler level, automatic flow or pressure control with or without pressure reset
- With heat exchanger overheating control
- Free mechanical cooling
- Supply Temperature control, variable set point with load dependant compensation
- Room or exhaust air humidity control
- Home automation / building automation and control system and technical home/building management required satisfying Efficiency Class A

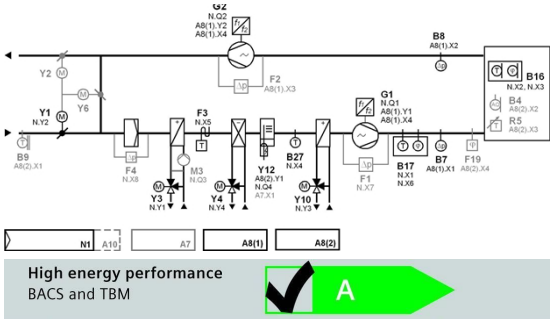

High energy performance
BACS and TBM

To fulfill the classification, the plant must be equipped with all indicated functions.

AEZH02 U3B HQ

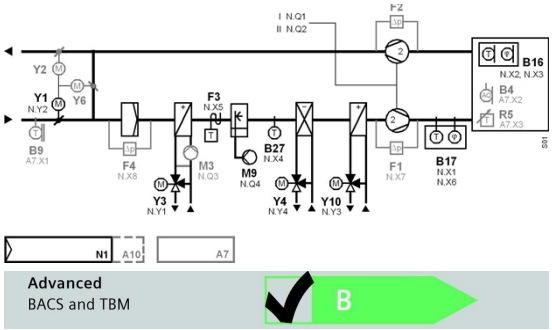

To fulfill the classification, the plant must be equipped with all indicated functions.

Air Conditioning Plant, Heating / Cooling / Humidifying / De-humidifying - Room-supply air temperature cascade and humidity control

- 7-day time switch with holiday / special day program
- Control of a 2-speed fan
- Room (extract air)-supply air temperature cascade control with minimum and maximum limitation of the supply air temperature
- Control of the supply air temperature via the mixed air dampers, the reheater valve and the cooling coil valve in sequence
- Control of the dewpoint temperature via the mixed air dampers and the preheater valve in sequence
- Control of room humidification via the air humidifier (on command) and the cooling coil valve in sequence
- Frost protection with frost protection monitor
- Supervision of the supply and extract air fans with differential pressure sensors
- Supervision of the supply air filter with a differential pressure sensor
- Limitation of supply air humidity by switching off the air humidifier in sequence

The indicated energy efficiency classification can be attained only if the following functions are implemented:

- Air flow control at the room level, demand control (Air quality sensor required)
- Air flow control at the air handler level, automatic flow or pressure control with or without pressure reset (Automatic fan step switching corresponds to Efficiency Class B / Step 2 must be switched based on air quality)
- With heat exchanger overheating control
- Free mechanical cooling (Outside air temperature and room temperature sensor required)
- Supply Temperature control, variable set point with load dependant compensation
- With supply air humidity control

RWG1.M12 Universal building controller

RWG1.M12

For monitor and control in FAU, AHU, heat exchange units, fans, pumps, lighting and other electromechanical equipments. Onboard RS485 and ethernet interface for flexible field data acquisition andcommunication· Smart and graphical program tools.

Universal IO to support AI, AO, DI, DO

Universal building controller with 12IOs, Modbus RTU and Modbus TCP interface

Data sheet	A6V10733750
Warranty	24 Months

Stock no.	Product no.
S55370-C171	**RWG1.M12**

RWG1.M8 Universal controller

RWG1.M8

For monitor and control in FAU, AHU, heat exchange units, fans, pumps, lighting and other electromechanical equipments.

- High flexibility and economical efficiency
- Onboard RS485 and ethernet interface for flexible field data acquisition and communication
- Smart and graphical user interface
- Self-explanatory programming language
- Comprehensive Siemens reference application library
- Powerful offline simulator

Data sheet	A6V10733750
Operating voltage	AC 24 V DC 24 V
Frequency	50/60 Hz
Power consumption	7 W / DC 24 V 14 VA / AC 24 V
Communication	Modbus RS485 and TCP
Max. cable length	30 m
Universal inputs/outputs, number	8
Degree of protection	IP20
Dimensions (W x H x D)	143 x 131 x 61 mm
Warranty	24 Months

Stock no.	Product no.
S55370-C172	**RWG1.M8**

RMS705B-1

Switching and monitoring device

The RMS705B-1 complements the range of Synco700 products as a freely configurable unit for
- control and supervisory functions in heating, ventilation and refrigeration plant
- non-standard applications

and, for this reason, offers no predefined standard applications.

The RMS705B-1 is especially suited for the following functions:
- Connection of additional universal alarm inputs
- Adding free inputs for display and supervision
- Event logging (e.g. legionella function)
- Additional time programs (ON / OFF) for basic functions
- Calculation of enthalpy, enthalpy differential, absolute humidity, dewpoint and wet bulb temperature
- Logic function blocks for switching on / off depending on different conditions
- Lead / lag control of pumps, fans, motors, etc., with automatic changeover
- Step switch with linear, binary or flexible functionality

The RMS705B-1 supports the languages: English, German, French, Italian, Spanish, Portuguese, Dutch, Danish, Finnish, Norwegian, Swedish, Polish, Czech, Hungarian, Russian, Slovak, Bulgarian, Greek, Romanian, Slovenian, Serbian, Croatian, Turkish, Chinese.

Extension modules complement the switching and monitoring device and offer extra functions. They are attached to the controller via plug-in connectors. The extension modules do not operate autonomously. The operation of the device from commissioning to enduser operation can be done via the operator unit.
Available extension modules:
- 1 universal module RMZ785
- 2 universal modules RMZ787
- 2 universal modules RMZ788

A total of 4 extension modules can simultaneously be used with the switching and monitoring device.

Available operator units:
- Plug-in operator unit RMZ790
- Detached operator unit RMZ791
- Bus operating unit RMZ792

Data sheet	N3124
Operating voltage	AC 24 V
Frequency	50/60 Hz
Power consumption	12 VA
Communication	KNX (KNX TP1)
Analog outputs, number	4
Analog output, signal	DC 0...10 V
Analog output, current	1 mA
Digital outputs, number	6
Universal inputs, number	8
Universal input, signal	T1 (PTC) Pt1000 Potential-free digital status contact LG-Ni1000 Digital pulse contact DC 0...10 V 2 x LG-Ni1000 0...1000 Ohm
Relay outputs, number	6
Relay output, switching voltage	AC 19...250 V
Relay output, switching current	4 (3)A
Mounting	DIN rail
Degree of protection	IP20
Dimensions (W x H x D)	173 x 90 x 80 mm
Warranty	24 Months

Stock no.	Product no.
S55370-C100	**RMS705B-1**

Plug-in type operator unit

RMZ790

- Operator unit plugs into the Synco™ 700 controllers
- For displaying and changing plant data for service staff and enduser
- Clear-text operation
- Can be plugged in and removed during operation
- Power supply via the controller

Data sheet	N3111
Mounting	DIN rail
Warranty	24 Months

Stock no.	Product no.
BPZ:RMZ790	**RMZ790**

Detached operator unit with 3 m cable

RMZ791

Like plug-in type operator unit, but:
- Other mounting choices (typically for control panel door or wall mounting)
- Larger display
- Connection via a prefabricated 3 m cable, supplied as standard

Data sheet	N3112
Mounting	Surface mounted (plaster)
Warranty	24 Months

Stock no.	Product no.
BPZ:RMZ791	**RMZ791**

Bus operator unit

RMZ792

Communicating operator unit for operating up to 150 controllers, room units and central units from the Synco™ 700 range via KNX bus.
Favorite pages can be freely defined. Designed for fixed installation or mobile use.

Data sheet	N3113
Operating voltage	AC 24 V
Voltage supply	KNX bus
Power consumption	2.5 VA
Degree of protection	IP20
Dimensions (W x H x D)	145 x 96 x 34 mm
Warranty	24 Months

Stock no.	Product no.
BPZ:RMZ792	**RMZ792**

QAW740

Room unit with KNX bus

Configurable unit with display of operating mode, timer, temperatures and fault.

With 3 operating elements:
- Knob for setpoint readjustments
- Operating mode button
- Timer button

Data sheet	N1633
Operating voltage	DC 24 V
Voltage supply	KNX bus
Measuring range, temperature	0...45 °C
Setpoint readjustment range	-3...3 K
Communication	KNX (KNX TP1)
Connection cable	2-wire
Degree of protection	IP20
Dimensions (W x H x D)	96 x 96 x 47 mm
Weight (net)	0.22 kg
Warranty	24 Months

Stock no.	Product no.
BPZ:QAW740	**QAW740**

RMZ78..

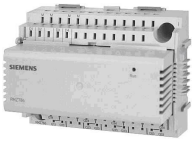

Universal modules

Additional inputs and outputs required by the Synco™ 700 controllers can be provided by these modules. A description of the functions is given with the relevant controller module.

Data sheet	N3146
Voltage supply	Supply from controller module
Power consumption	3 VA
Analog output, signal	DC 0...10 V
Analog output, current	Max. 1 mA
Universal input, signal	0...1000 Ohm 1000...1175 Ohm DC 0...10 V Potential-free digital status contact LG-Ni1000 Pt1000 T1 (PTC) 2 x LG-Ni1000
Relay outputs	switching contact, potential-free
Relay output, switching voltage	AC 19...265 V
Relay output, switching current	4 (3) A
Degree of protection	IP20
Dimensions (W x H x D)	117 × 90 × 75 mm

Range overview RMZ78..

Operating voltage [V]	Universal-inputs, number	Analog outputs, number	Relay outputs, number	Weight (net) [kg]	Stock no.	Product no.
	4	2	2	0.322	BPZ:RMZ788	**RMZ788**
AC 24	6	2	4	0.359	BPZ:RMZ789	**RMZ789**
	8	0	0	0.3	BPZ:RMZ785	**RMZ785**
	4	0	4	0.334	BPZ:RMZ787	**RMZ787**

Module connector

RMZ780

Module connector for detached mounting of extension modules within the control panel.

Data sheet	N3138
Max. cable length	10 m
Degree of protection	IP20
Dimensions (W x H x D)	18.5 x 87.5 x 22.5 mm
Warranty	24 Months

Stock no.	Product no.
BPZ:RMZ780	**RMZ780**

Sensors, setpoint adjusters

Product Title	Data sheet	Stock no.	Product no.
Frost detector, modulating	A6V10432020	BPZ:QAF63..J	**QAF63..J**
Differential pressure sensor, DC 0...10 V	N1910_01	BPZ:QBM2030..	**QBM2030..**
Flue gas temperature sensor Pt1000	N1846	BPZ:FGT-PT1000	**FGT-PT1000**
Immersion temperature sensor 100 mm	N1782	BPZ:QAE2164.010	**QAE2164.010**
Immersion temperature sensor 150 mm	N1782	BPZ:QAE2164.015	**QAE2164.015**
Duct temperature sensor 400 mm, LG-Ni1000	N1761	BPZ:QAM2120.040	**QAM2120.040**
Duct temperature sensor 2000 mm, LG-Ni1000	N1761	BPZ:QAM2120.200	**QAM2120.200**
Duct temperature sensor 6000 mm, LG-Ni1000	N1761	BPZ:QAM2120.600	**QAM2120.600**
Window pane temperature sensor	N1830	BPZ:QAT22	**QAT22**
Duct sensor for humidity	N1864	BPZ:QFM2100	**QFM2100**
Duct sensor for humidity and temperature	N1864	BPZ:QFM2120	**QFM2120**
Duct sensor for humidity and temperature	N1864	BPZ:QFM2160	**QFM2160**
Duct sensor for humidity (0...10 V) and temperature (0...10 V) with calibration certificate	N1883	BPZ:QFM4160	**QFM4160**
Solar sensor	N1943	BPZ:QLS60	**QLS60**
Duct sensor for air velocity	N1932	BPZ:QVM62.1	**QVM62.1**
Frost detector, air side, 2-point	A6V10432022	BPZ:QAF64..J	**QAF64..J**
Outside sensor LG-Ni1000	N1811	BPZ:QAC22	**QAC22**
Differential pressure sensor for liquids and gases	N1923	BPZ:QBE61.3-DP..	**QBE61.3-DP..**
Differential pressure sensors for liquids and gase (DC 0...10 V)	N1920	BPZ:QBE63-DP..	**QBE63-DP..**
Strap-on temperature sensor LG-Ni1000	N1801	BPZ:QAD22	**QAD22**
Strap-on temperature sensor with cable LG-Ni1000	N1802	BPZ:QAD26.220	**QAD26.220**
Immersion temperature sensor 100 mm LG-Ni1000, with protection pocket	N1781	BPZ:QAE2120.010	**QAE2120.010**
Duct temperature sensor 400 mm, Pt1000	N1761	BPZ:QAM2112.040	**QAM2112.040**
Immersion temperature sensur Ø 4 mm with cable and fitting	N1790	BPZ:QAE26.9..	**QAE26.9..**
Differential pressure sensors for liquids and gase (0...10 V)	N1922	BPZ:QBE3000..	**QBE3000..**
Immersion temperature sensor 150 mm, LG-Ni1000, with protection pocket	N1781	BPZ:QAE2120.015	**QAE2120.015**
Immersion temperature sensor 100 mm, LG-Ni1000, without protection pocket	N1781	BPZ:QAE2121.010	**QAE2121.010**
Cable temperature sensor for high-temperature applications (180°C)	N1833	BPZ:QAP21.2	**QAP21.2**
Cable temperature sensor silicone 1.5 m, LG-Ni1000	N1831	BPZ:QAP21.3	**QAP21.3**
Immersion temperature sensor 150 mm LG-Ni1000, without protection pocket	N1781	BPZ:QAE2121.015	**QAE2121.015**
Outside/room temperature sensor DC 0...10 V	N1814	BPZ:QAC3161	**QAC3161**
Cable temperature sensor PVC 2 m, LG-Ni1000	N1831	BPZ:QAP22	**QAP22**
Duct sensor for humidity for demanding requirements	N1882	BPZ:QFM3100	**QFM3100**
Duct air quality sensor CO_2/ temperature / rel. humidity / VOC	N1962	BPZ:QPM21..	**QPM..**
Duct sensor for humidity and temperature for demanding requirements	N1882	BPZ:QFM3160	**QFM3160**
Duct air quality sensor CO_2 / temperature / rel. humidity / VOC; Modbus	A6V11610641	BPZ:QPM21..-MO	**QPM../MO**
Duct temperature sensor	A6V12251940	BPZ:QAM16..020	**QAM16..020**

Monitors

Product Title	Data sheet	Stock no.	Product no.
Condensation monitor	A6V10741072	BPZ:QXA21..	**QXA21..**
Frost monitor, 2-point, capillary tube 3000 mm, -10...+15 °C	A6V12051788	S55700-P163	**QAF65.3AR-J**
Frost monitor, 2-point, capillary tube 6000 mm, -10...+15 °C	A6V12051788	S55700-P164	**QAF65.6AR-J**
Duct hygrostat, setpoint setting range 15...95 % r.h.	N1514	BPZ:QFM81.2	**QFM81.2**
Room hygrostat, setpoint setting range 15...95 % r.h., setpoint adjuster inside device	N1514	BPZ:QFM81.21	**QFM81.21**
Frost detector, air side, 2-point	A6V10432022	BPZ:QAF64..J	**QAF64..J**
Frost monitor, 2-point, capillary tube 3000 mm, -10...+15 °C, Reset button	A6V11965899	S55700-P161	**QAF65.3M-J**
Frost monitor, 2-point	N1284	BPZ:QAF81..	**QAF81..**
Frost monitor, 2-point, capillary tube 6000 mm, -10...+15 °C, Reset button	A6V11965899	S55700-P162	**QAF65.6M-J**
Room hygrostat, setpoint setting range 30...90 % r.h., setpoint adjuster inside device	N1518	BPZ:QFA1000	**QFA1000**

Monitors

Product Title	Data sheet	Stock no.	Product no.
Room hygrostat, setpoint setting range 30...90 % r.h., external setpoint adjustment	N1518	BPZ:QFA1001	**QFA1001**
Temperature controller	N1205	BPZ:RAK-TR.1..H	**RAK-TR.1..H**
Thermal reset limit thermostat	N1202	BPZ:RAK-TW.1..H	**RAK-TW.1..H**
Temperature limiter	N1206	BPZ:RAK-TB.1..M	**RAK-TB.1..M**
Safety limit thermostat	N1204	BPZ:RAK-ST..M	**RAK-ST..M**
Temperature controller/ thermal reset limit thermostat	N1212	BPZ:RAZ-TW.1..J	**RAZ-TW.1..J**
Differential pressure monitor	N1552	BPZ:QBM81..	**QBM81..**
Temperature controller/ safety limit thermostat	N1214	BPZ:RAZ-ST..J	**RAZ-ST..J**

Room units / sensors

Product Title	Data sheet	Stock no.	Product no.
Front module with passiv temperature measurement, LG-Ni1000	N1408	S55720-S133	**AQR2531ANW**
Room air quality sensor CO_2 / temperature / rel. Humidity / VOC	N1961	BPZ:QPA20..	**QPA..**
Room sensor for humidity (DC 0...10 V) for demanding requirements	N1858	BPZ:QFA3100	**QFA3100**
Room sensor for humidity (DC 0..10V) and temperature (DC 0..10V) with calibration certificate	N1859	BPZ:QFA4160	**QFA4160**
Room sensor CO_2 /Humidity/Temperature Modbus	A6V12046144	S55720-S510	**QPA2052/MO**
Front module for base modules, temperature (active)	N1411	S55720-S136	**AQR2532NNW**
Room unit with room temperature sensor and setpoint adjuster	N1721	BPZ:QAA25	**QAA25**
Indoor air quality controller with integrated VOC sensor for mixed gas	N1571	BPZ:QPA84	**QPA84**
Room sensor for humidity (DC 0...10 V) and temperature (DC 0...10 V) for demanding requirements	N1858	BPZ:QFA3160	**QFA3160**
Room temperature sensor LG-Ni1000	N1721	BPZ:QAA24	**QAA24**
Room sensor for humidity (DC 0...10 V)	N1857	BPZ:QFA2000	**QFA2000**
Room sensor KNX for temperature, white	N1602	S55624-H103	**QMX3.P30**
Room sensor for humidity (DC 0...10 V) and temperature (LG-Ni1000)	N1857	BPZ:QFA2020	**QFA2020**
Room unit with room temperature sensor and setpoint readjuster -3...3 K	N1721	BPZ:QAA27	**QAA27**
Room sensor for humidity (DC 0...10 V) and temperature (DC 0...10 V)	N1857	BPZ:QFA2060	**QFA2060**
Room temperature sensor LG-Ni1000 for mounting on recessed conduit boxes	N1722	BPZ:QAA64	**QAA64**
Room unit with KNX bus	N1633	BPZ:QAW740	**QAW740**
Room sensor KNX for temperature and humidity, white	N1602	S55624-H116	**QMX3.P40**
Room sensor KNX for temperature, humidity, CO2, white	N1602	S55624-H104	**QMX3.P70**
Mounting plates for front modules with passiv temperature measurement	N1408	BPZ:AQR2500..	**AQR2500..**
Base module with KNX for temperature and humidity measurement	N1411	BPZ:AQR2570..	**AQR2570..**

Step switches, signal converter and transformers

Product Title	Data sheet	Stock no.	Product no.
Transformers	N5536	BPZ:SEM62..	**SEM62..**
Universal digital indicator	N5312	BPZ:BAU200	**BAU200**
Current valve	N4938	S55376-C160	**SEA45.5**
Signal converter DC 0...10 V or DC 0 / 10 V in AC 0 / 24 V	N5102	BPZ:SEM61.4	**SEM61.4**
Variable Speed Drive for pumps and fans, IP55, Filter B (C1)	N5111	BPZ:G120P..AM..B..	**G120P..5B**
Variable Speed Drive for pumps and fans, IP55, Filter A (C2)	N5111	BPZ:G120P..AM..A..	**G120P..5A**
Variable Speed Drive for pumps and fans, IP20, Filter B (C1)	N5111	BPZ:G120P..AE..B..	**G120P..2B**
Variable Speed Drive for pumps and fans, IP20, Filter A (C2)	N5111	BPZ:G120P..AE..A..	**G120P..2A**
Signal converter with preprogrammed applications	N5146	BPZ:SEZ220	**SEZ220**

Service tool

Product Title	Data sheet	Stock no.	Product no.
Service tool for KNX / LPB	N5655	BPZ:OCI700.1	**OCI700.1**
USB - KNX Service interface	A6V10438951	S55800-Y101	**OCI702**
Web server for Synco devices	N5701	BPZ:OZW772..	**OZW772..**

The software (ACS790) can be downloaded for free via http://www.siemens.com/acs790.

Current valve

SEA45.5

Current valve for AC 24 V pulse/pause control
of electrical loads up to 30 kW

Mounting & local electrical regulations to be considered

SEA45.5 Current valve

Data sheet	N4938
Operating voltage	AC 24 V
Frequency	50/60 Hz
Power consumption	0.24 VA
Degree of protection	IP20
Dimensions (W x H x D)	35.6 x 110 x 136 mm
Warranty	24 Months

Stock no.	Product no.
S55376-C160	**SEA45.5**

Signal converter DC 0...10 V or DC 0 / 10 V in AC 0 / 24 V

SEM61.4

For converting a DC 0...10 V or DC 0 / 10 V input signal to a pulse-width modulated output signal AC 24 V
for the control of maximum 20 current valves

Data sheet	N5102
Operating voltage	AC 24 V
Frequency	50/60 Hz
Power consumption	1 VA
Analog input, signal	DC 0...10 V
Digital input, contact query	DC 0/10 V
Relay output, switching voltage	24 V
Triac output, switching voltage	24 V
Triac output, switching current	0.5 A
Degree of protection	IP20
Dimensions (W x H x D)	36 x 90 x 60 mm
Warranty	24 Months

Stock no.	Product no.
BPZ:SEM61.4	**SEM61.4**

Power amplifier for thermal actuators AC 24 V, PWM — UA1T

The UA1T power amplifier is used to allow the connection of additional valve actuators to controllers with an AC 24 V output signal.

Indoor use

Data sheet	N3591
Operating voltage	AC 24 V
Current consumption	15 A
Digital outputs	AC 24V PWM, for max. 2x2 therm. Fan
Universal input, signal	AC 24 V
Degree of protection	IP20
Weight (incl. packaging)	0.42 kg
Dimensions (W x H x D)	55 x 18 x 22 mm
Warranty	24 Months

Stock no.	Product no.
BPZ:UA1T	**UA1T**

SEZ220

Signal converter with preprogrammed applications

- Maximum and minimum selection
- Calculation of average
- Calculation of enthalpy, enthalpy differential, absolute humidity, dewpoint
- Flexible adaptation, limitation, inversion and conversion of input signal
- Tested preselected applications
- Flexible configuration

Data sheet	N5146
Operating voltage	AC 24 V
Frequency	50/60 Hz
Power consumption	5 VA
Analog outputs, number	2
Analog output, signal	DC 0...10 V
Analog output, current	1 mA
Universal inputs, number	5
Universal input, signal	0...1000 Ohm DC 0...10 V LG-Ni1000 Pt1000 T1 (PTC) 2 x LG-Ni1000
Degree of protection	IP20
Dimensions (W x H x D)	123 x 90 x 86 mm
Warranty	24 Months

Stock no.	Product no.
BPZ:SEZ220	**SEZ220**

Signal converter DC 0...20 V Phs to DC 0...10 V

SEZ91.6

For the conversion of DC 0...20 VPh signals
to DC 0...10 V signals

Data sheet	N5143
Operating voltage	AC 24 V
Frequency	50/60 Hz
Power consumption	0.5 VA
Analog input, signal	DC 0...20 V Phs
Analog output, signal	DC 0...10 V
Degree of protection	IP20
Dimensions (W x H x D)	57 x 22 x 18 mm
Warranty	24 Months

Stock no.	Product no.
BPZ:SEZ91.6	**SEZ91.6**

BAU200

Universal digital indicator

Universal single point digital indicator
- Suitable for front-mounting in control panel
- With LED display
- Input signal (type of signal and measuring range) can be set with buttons
- For all Siemens Building Technologies sensors (LG-Ni 1000, T1, PT100, PT 1000, 0 ... 10 V)

Data sheet	N5312
Display	1 line at 4 characters each
Analog input, signal	DC 0...10 V LG-Ni1000 Pt100 Pt1000 T1 (PTC)
Analog output, signal	DC 0...10 V
Mounting	Front mounting DIN rail
Warranty	24 Months

Stock no.	Product no.
BPZ:BAU200	**BAU200**

Digital time switch, 1-channel, with 7-day program

SEH62.1

Programmable as 24-hour or 7-day time switch. Wall or DIN rail mounting.

Data sheet	N5243
Operating voltage	AC/DC 230 V
Power consumption	3 VA
Frequency	50/60 Hz
Buffer time	72 h
Display	LCD
Digital inputs, number	1
Digital input, contact query	8 mA DC 24 V
Digital input, application	Countdown timer
Relay output, switching voltage	AC 24...250 V 24 V
Relay output, switching current	AC 6 (3)A DC 0.1...4 A
Relay outputs	Change-over contact Potential-free
Connection cable	2.5 mm²
Type of fixing	Wall mouting with screws DIN rail 60 mm long min.
Degree of protection	IP20
Ambient temperature, operation	0...50 °C
Dimensions (W x H x D)	79 x 106 x 56 mm
Warranty	24 Months

	Stock no.	Product no.
	BPZ:SEH62.1	**SEH62.1**

SEM62..

Transformers

Transformer with housing, providing a reduction in voltage from AC 230 V to AC 24 V (output power 30 VA)

- Self-resetting fuse integrated on the primary side
- Secondary On/Off switch and replaceable fuse (SEM62.2 only)
- Plug-in screw terminals
- Two secondary output plug-in terminals

Data sheet	N5536
Frequency	50/60 Hz
Primary voltage	AC 230 V
Secondary voltage	AC 24 V
Output rating	30 VA
Mounting	DIN rail
Degree of protection	IP20
Dimensions (W x H x D)	114 x 106 x 57 mm

Range overview SEM62..

Product Title	Stock no.	Product no.
Transformer	BPZ:SEM62.1	**SEM62.1**
Transformer with switch and replaceable fuse	BPZ:SEM62.2	**SEM62.2**

Software, web server and system devices

2

Overview and selection tools		140
Engineering and service tool (Synco / LPB)	For HVAC plants	145
Web server (Synco / LPB)	For Synco	147
	For LPB	149
KNX system devices	Interfaces and gateways	151
	Web server	154
	Line couplers	155
	Power supply units	156

2

Overview standard systems

Communication	KNX (Konnex)	LPB (Local process bus)
Standard systems for:	**Heating, ventilation or air conditioning**	**Heating plants**
Web-Server	OZW772..	OZW672..
PC Tool	ACS790	ACS790
Service Tool	OCI700.1	OCI700.1
USB-KNX Interface with Bus Power supply	OCI702	
Heating controllers	Synco™ ■ RMH760B-1 Heating controller ■ RMK770-1 Boiler sequence controller	■ RVL4.. Heating controllers ■ RVP3.. Heating controllers ■ RVD2.. District heating controllers
Ventilation / Air conditioning controller	Synco™ ■ RMU7..-1 Universal controller	
Switching and monitoring controllers	Synco™ ■ RMS705B-1 Swichting and monitoring device	
Room controllers	Synco™ ■ RMB795B-1 Central control unit ■ RXB Room controllers	
Home Automation System	Synco™ living ■ QAX903, QAX913	
Thermostats	Synco™ ■ RDF600KN, RDF600KN/S, RDF870KN, RDF880KN/NF ■ RDG200KN.., RDG260KN.., RDG204KN, RDG264KN, RDG405KN ■ RDF600KN/VB, RDF800KN, RDF800KN/VB	
Flush-mount room sensor	■ AQR253.. ■ AQR257..	
Wall-mount room sensor	■ QMX3.P30 ■ QMX3.P70	

Synco IC

Easy and secure remote access and plant overview

Synco IC is a web-based Remote Access System. Setting-up Internet access to your plant is easy:
just connect your web server OZW with the Internet, create your user account on the web page and enter the key for your web server OZW.

www.siemens-syncoic.com

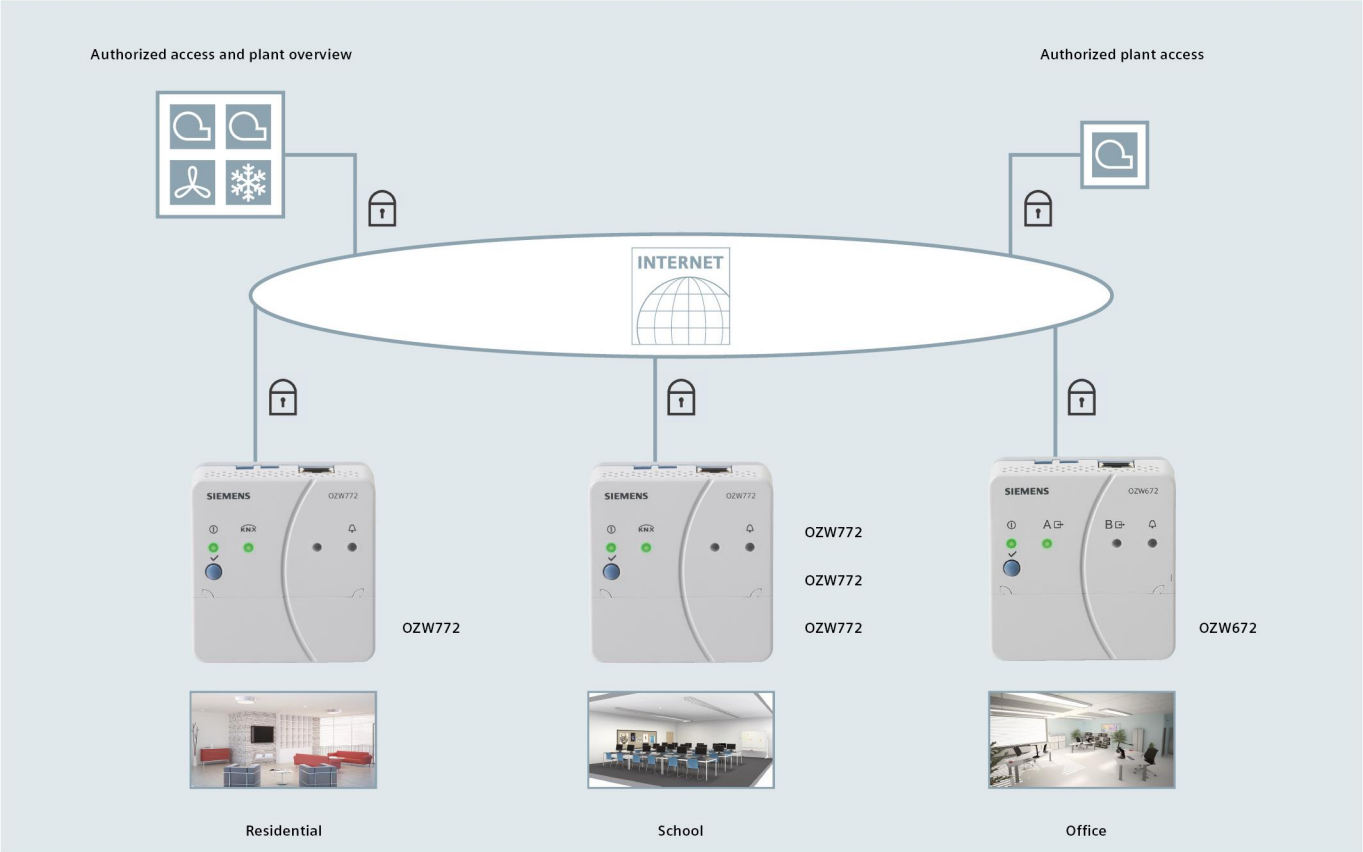

Internet portal Synco IC offers simple and secure access to your plants

Simple and fast set up of access via the Internet:

- fixed net- or mobile router
- neither a fixed IP address, nor a dynamic IP address service, nor port forwarding (NAT/PAT) is required

The portal provides additional functions:

- Manage one or multiple plants
- Central user management
- Display of plant overview, state of Energy indicators, and alarms
- Send alarm notifications per e-mail
- Secured communications through encryption (https)

2

Synco Web-Server

Standard systems for heating, ventilation or air conditioning Synco™ (KNX)

Low engineering system to easily build complex applications with flexible and modular combinations of standard controllers Synco™ 700. Standard Systems for HVAC plants are capable to be remote operated and can generate alarms to service centers. Full control without extensive engineering.

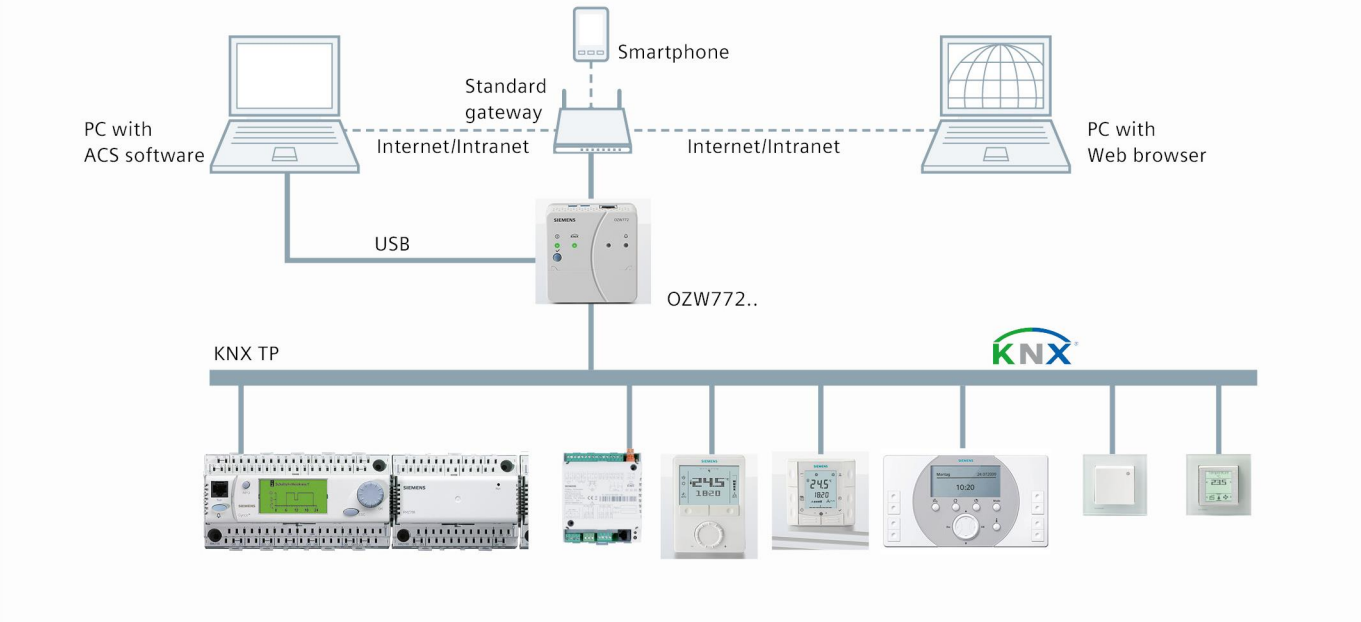

Web-Server	OZW772			
Device versions	**OZW772.01**	**OZW772.04**	**OZW772.16**	**OZW772.250**
No. of Synco devices [1]	1	4	16	250
KNX S-Mode data points	7	237	237	237
Plant operation				
ACS Software	Yes			
Web Browser	Yes			
Interface	Ethernet, USB			
Alarming				
Max. message receivers	4			
ACS alarm via PC	No			
Fax	No			
Pager	No			
SMS	No			
e-Mail	Yes (Ethernet)			
Offline trend function	Yes			
Digital alarm inputs (potential free)	No			
Local device operation	Button			
Bus power supply	No			
General device data				
Operating voltage	AC 230 V ±15 %			
Frequency	50/60 Hz			
Power consumption	3 VA			
Degree of protection	IP30			

[1] Synco™ controller series 700, QAW740, RXB.., RDG.., RDF.., Synco™ living QAX9..

LPB Webserver

Standard system for heating plants (LPB)

Low engineering system to easily build complex applications with flexible combinations of standard controllers Series RVL4.., RVP3.., and RVD2... Standard Systems for heating plants are capable to be remote operated and can generate alarms to service centres: Full control without extensive engineering.

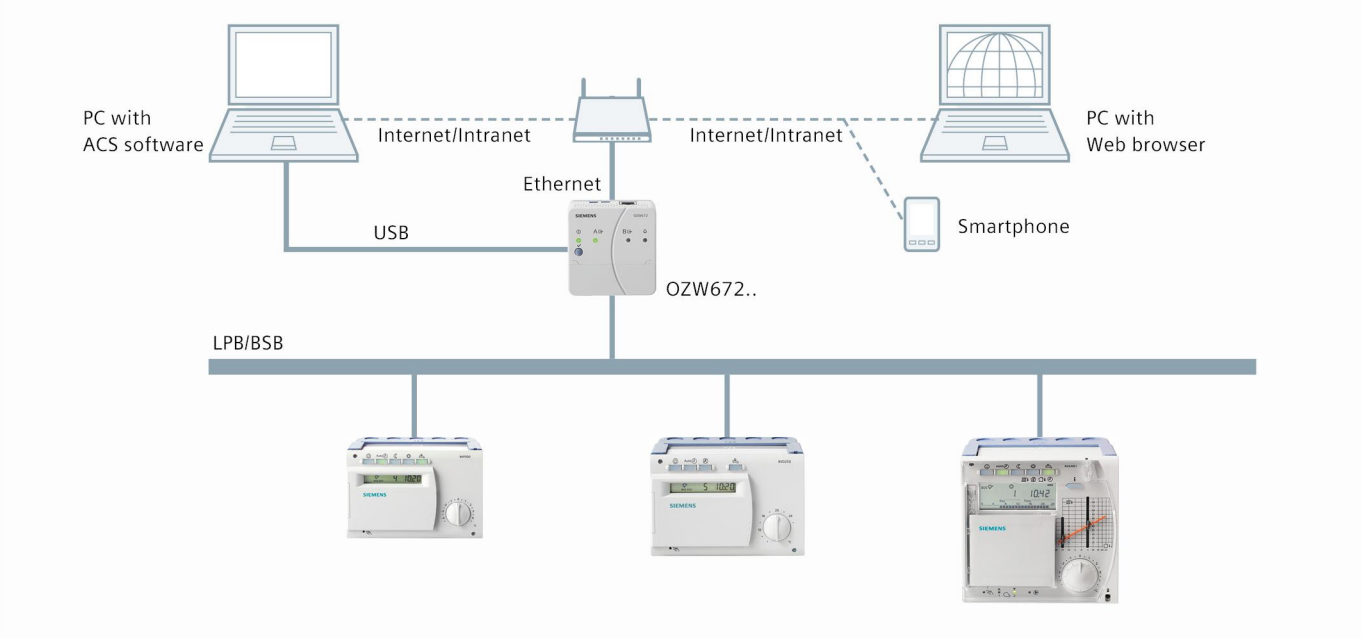

Webserver	OZW672		
Device versions	**OZW672.01**	**OZW672.04**	**OZW672.16**
No. of comm. devices [1]	1	4	16
Plant operation			
ACS software	Yes		
Web Browser	Yes		
Interface	Ethernet, USB		
Alarming			
Max. message receivers	4		
ACS alarm via PC	No		
Fax	No		
Pager	No		
SMS	No		
e-Mail	Yes (Ethernet)		
Offline trend function	Yes		
Digital alarm inputs (potential free)	2		
Local device operation	Button		
Bus power supply	No		
General device data			
Operating voltage	AC 230 V ±15%		
Frequency	50/60 Hz		
Power consumption	3 VA		
Degree of protection	IP30		

[1] RVL4..,RVP3..,RVD2..

2

Interfaces

Different interfaces are available for the connection with a Microsoft Windows PC tool. The units OCI7... are designed for portable use and devices N 148/... for mounting on a DIN rail.

Interface				
Type	OCI700	OCI702	N 148/12	N 148/23
PC Interface	USB	USB	USB	Ethernet RJ45
Long frames up to 64 Bytes	Yes	Yes	Yes	Yes
Tool (starting with version)				
ACS	V1	V10	V10	No
ETS	V3	V3	V3	V5
Desigo ABT Site	V6	V6	No	No
Devices				
Heating controller RVD, RVP, RVL	Yes	None	None	None
Synco 200 controller	Yes	None	None	None
Synco 700 and individual room controller	Yes	Yes	Yes	Yes
Synco living appartment unit	Yes	Yes	Yes	Yes
Gamma devices	Yes	Yes	Yes	Yes
Desigo TRA (DXR, PXC3)	None	Yes	None	None
KNX TP devices	Yes	Yes	Yes	Yes
Power supply				
Bus power supply (KNX TP)	No	25 mA, switchable	No	No
Power consumption from field bus	5 mA	5 mA	5 mA	5 mA
Operating voltage	USB	USB	USB	Power over Ethernet
Alternative power supply	No	No	No	24 VAC/DC
Mounting				
Mounting	portable	portable	DIN-Rail	DIN-DIN-Rail
Supplied accessories				
Cable for PC	USB	USB		
Cable for field bus	KNX RJ45 LPB RJ12	KNX RJ45 Jack plug Bus terminal		
Transport container	Service case	Bag		

Service tool for KNX / LPB

OCI700.1

The service tool consists of:
- OCI700 service interface
- USB cable
- Service cable for Synco™ controllers
- Service cable for SIGMAGYR® and ALBATROS controllers

Commissioning and diagnostics of the following devices:

Synco devices:
- Web Server OZW772
- Heating controller RMH760B-1
- Boiler sequence controller RMK770-1
- Universal controllers RMU7..0B-1
- Universal controllers RLU2..
- Switching and monitoring device RMS705B-1
- Room unit QAW740
- Central control unit RMB795B-1
- Individual room controllers RXB..
- Signal converter SEZ220
- Synco™ living central apartment unit QAX9..
- Synco™ thermostats RDF.., RDG..
- Sensores: QMX3.P30, QMX3.P70, AQR253.. and AQR257..

LPB/BSB systems
- Web server units: OZW672
- Sigmagyr controllers: RVD.., RVL.., RVP..
- Albatros controllers

Data sheet	N5655
Degree of protection	IP20
Color	Gray
Warranty	24 Months

Stock no.	Product no.
BPZ:OCI700.1	**OCI700.1**

USB - KNX Service interface

OCI702

The service interface consists of:
- OCI702 service interface
- USB 2.0 cable (Type A / B)
- KNX service cable for Synco™ controllers (RJ45 / RJ45)
- KNX service cable for Desigo™ TRA (RJ45 / jack plug 2.5 mm)
- KNX service cable (RJ45 / KNX bus terminal)

With the respective PC software, the interfaces allows to commission and service devices with KNX communication, e.g. from the following ranges:

- Synco™ 700 controllers and room devices
- KNX room thermostats RDF..., RDG..
- Individual room controllers RXB..
- Synco™ living central apartment units QAX9...
- Desigo TRA
- GAMMA devices

Data sheet	A6V10438951
Degree of protection	IP20
Warranty	24 Months

	Stock no.	Product no.
	S55800-Y101	**OCI702**

Web server for Synco devices

OZW772..

Web server OZW772 allows for remote plant control and monitoring via the web.

- Operate web browser via PC/laptop and Smartphone
- Operate ACS (PC/laptop with ACS plant operating software)
- Connections: USB and Ethernet
- Display fault messages in the web browser
- Send fault messages to a maximum of 4 e-mail recipients
- Periodically send system reports to e-mail recipients
- Visualize the plants in the web browser based on standard plant diagrams and customized plant web pages
- Acquire and display consumption data
- Send consumption data file to 2 email recipients
- Function "Energy indicator" to monitor data points for energy-related limit values, or "Green limits"
- Web services for external applications via Web API (Web Application Programming Interface)
- Encrypted with https and TLS for e-mails
- Record of trends, display and dispatch to 2 e-mail recipients
- Integration up to 237 S-Mode data points of KNX devices (not OZW772.01)
- Direct commissioning with web browser or ACS service tool
- Easy and secure remote access and plant overview with Synco IC Remote Access - a web-based service for secure remote access (www.siemens-syncoic.com)

Internet portal Synco IC offers simple and secure access to your plants
- Simple and fast set up of access via the Internet (fixed net- or mobile router)
- The portal provides additional functions:
  - Manage one or multiple plants
  - Central user management
  - Display of plant overview, state of Energy indicators and alarms
  - Send alarm notifications per e-mail
  - Secured communications through encryption (https)

Web servers OZW772.01, OZW772.04, OZW772.16, OZW772.250 can connect 1, 4, 16, or 250 KNX devices from the product ranges Synco 700, Synco RXB, and RDG/RDF room thermostats, and the QAX Synco living central apartment units.

Data sheet	N5701
Operating voltage	Power pack: AC 230 V Web server: DC 24 V
Communication	KNX TP (twisted pair) Ethernet, RJ45 plug socket (shielded) USB V2.0
Mounting	On DIN rails With Screws
Degree of protection	IP30
Dimensions (W x H x D)	87.5 x 90 x 40 mm

Range overview OZW772..

Product Title	Stock no.	Product no.
Web server for 1 Synco device	BPZ:OZW772.01	**OZW772.01**
Web server for 4 Synco devices	BPZ:OZW772.04	**OZW772.04**
Web server for 16 Synco devices	BPZ:OZW772.16	**OZW772.16**
Web server for 250 Synco devices	BPZ:OZW772.250	**OZW772.250**

Synco standard system main components

Product Title	Data sheet	Stock no.	Product no.
VAV compact controller KNX	N3547	BPZ:G..B181.1E/KN	**G..B181.1E/KN**
Room thermostats RDG2.. with KNX communications	A6V11545853	BPZ: RDG2..KN	**RDG2..KN**
Flush mount KNX room thermostat for 2-/4-pipe FCU with on/off output and 2x universal input, fit for both round and square conduit boxes	N3076	S55770-T293	**RDF600KN**
Central control unit for room controllers and room thermostats	N3122	S55370-C162	**RMB795B-1**
Heating controller	N3133	BPZ:RMH760B-1	**RMH760B-1**
Boiler sequence controller	N3132	BPZ:RMK770-1	**RMK770-1**
Switching and monitoring device	N3124	S55370-C100	**RMS705B-1**
Room controller for 3-speed fan	N3873	BPZ:RXB21.1/FC-10	**RXB21.1/FC-10**
Room controller for 3-speed fan	N3873	BPZ:RXB21.1/FC-11	**RXB21.1/FC-11**
Room controller with 3-speed fan and electric heating coil	N3873	BPZ:RXB22.1/FC-12	**RXB22.1/FC-12**
Room controller for chilled ceilings and radiators	N3874	BPZ:RXB24.1/CC-02	**RXB24.1/CC-02**
Room controller for fan-coil applications with KNX communication	N3875	S55373-C121	**RXB39.1/FC-13**
Room thermostat for temperature and air quality control with KNX communications, AC 24 V, VAV heating and cooling systems	N3192	S55770-T348	**RDG405KN**
Room sensor KNX for temperature, white	N1602	S55624-H103	**QMX3.P30**
Flush mount touch KNX room thermostat for 2-/4-pipe FCU with on/off output and 2x universal input, fit for both round and square conduit boxes	N3174	S55770-T350	**RDF800KN**
Universal controller	N3150	BPZ:RMUB..	**RMU7..0B-1**
Web server for Synco devices	N5701	BPZ:OZW772..	**OZW772..**
Flush mount touch KNX PM2.5 & CO2 & Ventilation Controls with on/off or ECM fans selectable and 2x DC 0-10 V input, fit for both round and square conduit boxes	A6V11439454	S55770-T407	**RDF870KN**
Room unit with KNX bus	N1633	BPZ:QAW740	**QAW740**
Flush mount touch MODBUS PM2.5 & CO2 & Ventilation Controls with on/off or ECM fans selectable and 2x DC 0-10 V input, fit for both round and square conduit boxes	A6V11439454	S55770-T408	**RDF870MB**
Room sensor KNX for temperature, humidity, CO2, white	N1602	S55624-H104	**QMX3.P70**
Front modules for base module	N1411	BPZ:AQR253..	**AQR253..**
Base module with KNX for temperature and humidity measurement	N1411	BPZ:AQR2570..	**AQR2570..**
Base modules with KNX for CO_2 measurement	N1411	BPZ:AQR2576..	**AQR2576..**

Web Server for LPB devices

OZW672..

Web server OZW672 allows for remote plant control and monitoring via the web

- Operate web browser via PC/laptop and Smartphone
- Operate via ACS790 PC tool
- Connections: USB and Ethernet
- 2 digital inputs for fault messages
- Display fault messages in the web browser
- Send fault messages to a maximum of 4 email recipients
- Periodically send system reports to email recipients
- Visualize the plants in the web browser based on standard plant diagrams and customized plant web pages
- Function "Energy indicator" to monitor data points for energy-related limit values, or "Green limits"
- Web services for external applications via Web API (Web Application Programming Interface)
- Encrypted with https and TLS for emails
- Record of trends, display and dispatch to 2 e-mail recipients

Internet portal Synco IC offers simple and secure access to your plants
- Simple and fast set up of access via the Internet (fixed net- or mobile router)
- The portal provides additional functions:
  - Manage one or multiple plants
  - Central user management
  - Display of plant overview, state of Energy indicators and alarms
  - Logging fault messages
  - Send alarm notifications per e-mail
  - Secured communications through encryption (https)

Package insert:
Mounting Instructions M5712
Power pack AC 230 V / DC 24 V
Ethernet-cable
USB-cable
2 cable ties

Web servers OZW672.. can connect 1 LPB/BSB device or 4 or 16 LPB devices from the product ranges Sigmagyr, Albatros and Albatros2.

Data sheet	N5712
Operating voltage	Power pack: AC 230 V Web server: DC 24 V
Communication	LPB/BSB (twisted pair) Ethernet, RJ45 plug socket (shielded) USB V2.0
Digital inputs, number	2
Mounting	DIN rail
Degree of protection	IP30
Dimensions (W x H x D)	87.5 x 90 x 40 mm

Range overview OZW672..

Product Title	Stock no.	Product no.
Web Server for 1 LPB/BSB device	BPZ:OZW672.01	**OZW672.01**
Web Server for 4 LPB devices	BPZ:OZW672.04	**OZW672.04**
Web Server for 16 LPB devices	BPZ:OZW672.16	**OZW672.16**

LPB standard system main components

Product Title	Data sheet	Stock no.	Product no.
Web Server for LPB devices	N5712	BPZ:OZW672..	**OZW672..**
Heating controller for 1 heating circuit or boiler temperature control	N2540	BPZ:RVL480	**RVL480**
Heating controller for boiler temperature control and d.h.w. heating	N2541	BPZ:RVL481	**RVL481**
Heating controller for boiler temperature control for modulating or 2-stage burners with d.h.w. heating	N2542	BPZ:RVL482	**RVL482**
Heating controller for a second heating circuit	N2543	BPZ:RVL479	**RVL479**
Heating controller for 1 heating circuit	N2545	S55370-C136	**RVP340**
Heating controller for 1 heating circuit and d.h.w.	N2545	S55370-C137	**RVP350**
Heating controller for 2 heating circuits and d.h.w.	N2546	S55370-C139	**RVP360**
District heating controller	N2513	BPZ:RVD25..	**RVD25..**
District heating controller	N2515	BPZ:RVD26..	**RVD26..**

IP Controller

N 350E01

- LEDs for indicating that the device is ready-to-run, KNX communication, IP communication
- LC-Display
- Supports KNXnet/IP
- 1 Interface function (Tunneling), 1 Interface function (object server)
- Integrated real-time clock, weekly scheduling program for 100 scheduled entries/astro function
- Yearly time switching functions, 200 Event entries, 30 Logic gates
- Electronics powered via an external nominal 24 V AC/DC, 40 mA power supply unit
- Ethernet connection via RJ45 socket
- Plug-in terminal block for the connection of an external power supply unit
- Integrated bus coupling unit, bus connection via bus terminal
- Modular installation devices for mounting on TH35 EN 60715 mounting rail

The external 24 V AC/DC power supply unit must be ordered separately (e. g. 4AC2402).

Data sheet	A6V10416135
Dimension width (1 MW = 18 mm)	4 MW

Stock no.	Product no.
5WG1350-1EB01	**N 350E01**

IP Interface Secure

N 148/23

- For communication between KNX devices and PCs or other devices with Ethernet (10BaseT or 100BaseT) interface, for remote access to an KNX installation
- Uses the KNXnet/IP protocol or secured access and data transmission via KNXnet/IP Secure
- Up to five KNXnet/IP Tunneling connections for parallel bus access by ETS and further PC software
- Assignment of the network parameters by the installer using ETS, automatically by a DHCP server in the network
- 5 LEDs for display of availibility, KNX communication and IP communication
- Electronics powered via “Power over Ethernet” according to IEEE 802.3af or alternatively by an external safety extra low voltage power supply for AC/DC 24V
- Pluggable terminal block for connection of external power supply unit (not included)
- Ethernet connection via RJ45 socket
- Housing: plastic, color RAL 7035 (light grey), N-system
- DIN rail mounted device for mounting on rail TH35 according to DIN EN 60715
- Type of protection: IP 20

Data sheet	A6V11689764
Dimensions (W x H x D)	36 x 90 x 60 mm
Dimension width (1 MW = 18 mm)	2 MW

Stock no.	Product no.
5WG1148-1AB23	**N 148/23**

2

N 146/03

IP Router Secure

- For interconnection of bus lines or bus areas via a fast data network (Ethernet 10BaseT or 100BaseT) with Internet Protocol (IP)
- To be used as line, area and system coupler
- Uses the KNXnet/IP protocol or secured access and data transmission via KNXnet/IP Secure
- Up to five KNXnet/IP Tunneling connections for parallel bus access by ETS and further PC software
- Assignment of the network parameters by the installer using ETS, automatically by a DHCP server in the network
- 5 LEDs for display of availibility, KNX communication and IP communication
- Electronics powered via “Power over Ethernet” according to IEEE 802.3af or alternatively by an external safety extra low voltage power supply for AC/DC 24 V
- Pluggable terminal block for connection of external power supply unit (not included)
- Ethernet connection via RJ45 socket
- Housing: plastic, color RAL 7035 (light grey), N-system
- DIN rail mounted device for mounting on rail TH35 according to DIN EN 60715
- Type of protection: IP 20

Data sheet	A6V11656735
Dimensions (W x H x D)	36 x 90 x 60 mm
Dimension width (1 MW = 18 mm)	2 MW

Stock no.	Product no.
5WG1146-1AB03	**N 146/03**

N 148/12

USB Interface

- Compatible with USB 2.0 and USB 3.0
- For isolated access to the bus line over the built-in USB socket (type B)
- For connection of a PC for addressing, parameterization, visualization, logging and diagnosis of bus devices
- Access to all bus devices in the whole bus system
- Support of bus telegrams with up to 64 bytes length
- Power supply over the bus line and over USB through the connected PC
- Integrated bus coupling unit, bus connection over bus terminal
- Transmission at USB 2.0 speed (max. 12 Mbit/s) between PC and USB interface
- Modular installation device for mounting on TH35 DIN EN 60715 mounting rail

Data sheet	A6V11535346
Dimensions (W x H x D)	18 x 90 x 55 mm
Dimension width (1 MW = 18 mm)	1 MW

Stock no.	Product no.
5WG1148-1AB12	**N 148/12**

IP Gateway KNX/BACnet

N 143/01

- BACnet Application Specific Controller (B-ASC) as Gateway between KNX TP and BACnet IP
- BTL certified
- Up to 250 BACnet objects
- Up to 455 BACnet COV subscriptions
- Automatic translation of KNX communication objects into BACnet objects according to the configuration with ETS
- For communication between KNX EIB devices and PCs or other devices with Ethernet (10BaseT) interface, as well as in conjunction with a LAN modem or DSL router for remote access to an KNX EIB installation
- For use as an interface e.g. for ETS or for visualization software
- Use the KNXnet/IP protocol
- KNXnet/IP Tunneling connection for parallel bus access by ETS and further PC software
- ObjectServer connection for visualization via network connections with long signal transmission duration
- Assignment of the network parameters by the installer using ETS, or automatically by a DHCP server in the network
- 2 LEDs for display of operational availability and IP communication
- Additional power supply by an external safety extra low voltage power supply for AC/DC 24 V, 40 mA
- Pluggable terminal block for connection of external power supply unit (not included)
- Integrated bus coupling unit with bus connection via bus terminal
- Ethernet connection via RJ45 socket
- Mounting on DIN rail EN 60715-TH35-7.5

Data sheet	A6V10466141
Dimensions (W x H x D)	72 x 90 x 60 mm
Dimension width (1 MW = 18 mm)	4 MW

Stock no.	Product no.
5WG1143-1AB01	**N 143/01**

2

N 152/01

IP Control Center

Visualisation controller for full-graphic visualizations on web-compatible end devices such as PCs, tablets and smart phones with a standard web browser.
For communication between KNX devices and PCs and, in connection with a LAN-/WLAN modem or DSL router, for remote access to a KNX installation, for usage as an interface for the ETS 3/4/5 and as an interface for a visualization, with usage of the KNXnet/IP protocol, with the following simultaneously usable functions:

- Web server for operating and monitoring up to 1250 statuses and values transmitted by the KNX network, which can be displayed using a standard browser on PCs, tablets, or smartphones connected to the IP network
- Special web-configuration page for a firmware update, to set the IP configuration, SMTP server, security settings, password protection, certificates, Sonos module, API connection and restart
- Graphical web editor for a creation of fully graphical visualization with control and display elements, configurable in various styles
- Smart editor for the creation of a visualisation, tuned for mobile browsers, smartphones, tablets with control and display elements, configurable in various styles and layouts
- Annual timer, with astronomical calendar, for 300 time switch schedules with up to 30 time switch commands per time switch schedule
- Scene module with up to 5000 scenes or events
- Chart module for recording and reporting of up to 10 data points
- Monitoring module for monitoring and storage of up to 1000 events into a ring buffer
- IP interface for control of up to 20 IP-devices via up to 20 TCP/UDP commands per IP-device
- Fully graphical logic module with up to 1000 logic functions
- Alarm function for up to 250 different alarms
- E-mail function, with up to 20 contacts, for transmission of chart data from chart module, logged data from monitoring module or alarm data
- Data point management for viewing, managing, editing and categorizing all available data points
- Module for controlling SONOS loudspeakers
- Module for controlling the Philips HUE LED lighting system
- Ethernet interface 10/100 Mbits/s with RJ45 socket for connection to the IP network using the Internet Protocol
- 2 LED displays for IP connection/communication and for error messages
- Integrated bus connector and bus terminal for connection to a KNX network
- Power supply of the electronics by an external voltage source for AC/DC 24 V, 50 mA
- Series installation device for mounting on support rails TH35 DIN EN 60715

Data sheet	A6V10417875
Dimensions (W x H x D)	72 x 90 x 60 mm
Dimension width (1 MW = 18 mm)	4 MW

Stock no.	Product no.
5WG1152-1AB01	**N 152/01**

Line/backbone coupler

N 140/13

- For data exchange between two KNX bus lines with telegrams of up to 64 byte
- For use as line coupler for connecting a line to the main line or as backbone coupler for connecting a main line to the backbone line or as repeater for connecting two segments of the same line, with electrical isolation of the two bus lines
- Loadable filter table for control of the data exchange between the two bus lines
- Additional loadable filter table for telegrams with LTE addressing
- Detection of a communication fault on the lower-level line and signaling to the higher-level line
- 3 LEDs for display of availability and receipt of a telegram per line
- Power supply from the main line
- Modular installation devices for mounting on TH35 EN 60715 mounting rail
- With bus connection to the line and to the main line via bus terminal.

Data sheet	A6V10416071
Dimensions (W x H x D)	36 x 90 x 60 mm
Dimension width (1 MW = 18 mm)	2 MW

	Stock no.	Product no.
	5WG1140-1AB13	**N 140/13**

2

N 125/..2

Power supply unit

- Integrated chokes
- Bus connection via bus terminal
- Parallel operating mode power supplies
- Rated operational voltage AC 120...230 V, 50...60 Hz, DC 220 V
- Output voltage DC 29 V
- Additional unchoked output for DC 29 V, for powering a second bus line via an external choke N 120/2
- Modular installation devices for mounting on TH35 EN 60715 mounting rail

Data sheet	A6V10416488

Range overview N 125/..2

Product Title	Dimensions (WxHxD) [mm]	Dimension width (1 MW = 18 mm)	Stock no.	Product no.
Power supply unit DC 29 V, 160 mA with additional unchoked output, N 125/02	72 x 90 x 60	4 MW	5WG1125-1AB02	**N 125/02**
Power supply unit DC 29 V, 320 mA with additional unchoked output, N 125/12	72 x 90 x 60	4 MW	5WG1125-1AB12	**N 125/12**
Power supply unit DC 29 V, 640 mA with additional unchoked output, N 125/22	72 x 90 x 60	4 MW	5WG1125-1AB22	**N 125/22**

N 120/02

Choke, 640 mA

- For operation with a KNX power supply without integrated choke or for connection to the unchoked output of the KNX N 125/x2 power supplies
- Low-voltage terminal for unchoked voltage and bus
- Modular installation devices for mounting on TH35 EN 60715 mounting rail

Data sheet	A6V10416067
Dimensions (W x H x D)	36 x 90 x 60 mm
Dimension width (1 MW = 18 mm)	2 MW

Stock no.	Product no.
5WG1120-1AB02	**N 120/02**

Room automation

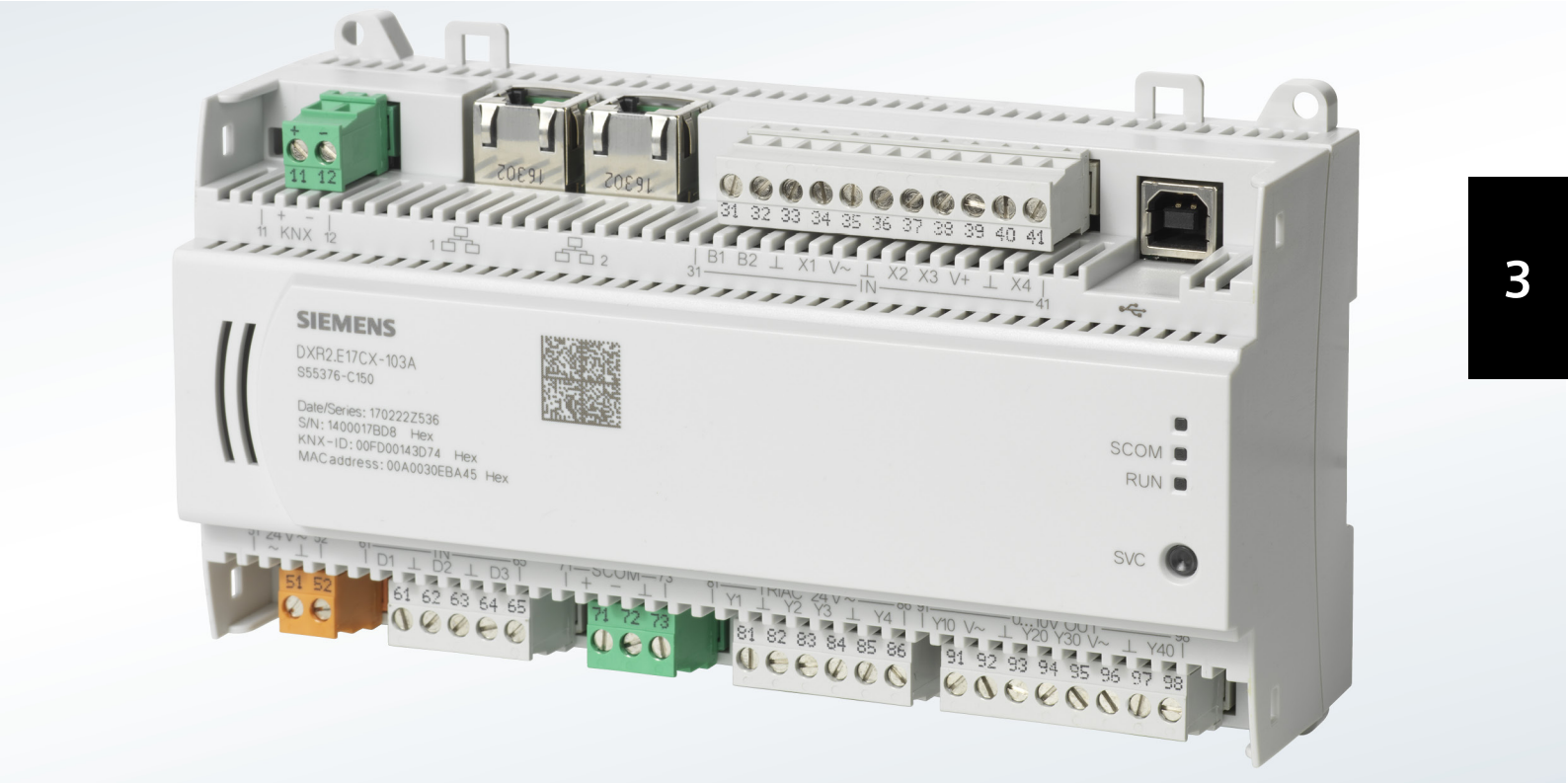

3

Overview and selection tools		158
Room automation RXB (KNX)	Room controllers RXB	167
	Room operator units QAX3.. (PPS2)	170
	Central control unit RMB	172
Room automation DXR (BACnet)	Room automation station DXR	173
	Room units with KNX PL-Link	182
	Field devices with KNX PL-Link	194

3

Usage of DXR

1. Check application requirements

Requirements

- Fan coil
- 4-pipe system
- 3-speed fan
- 2 valves with electrothermal actuators (2-point control signal)
- Voltage AC 230 V
- Presence detector
- Room unit with built-in temperature sensor

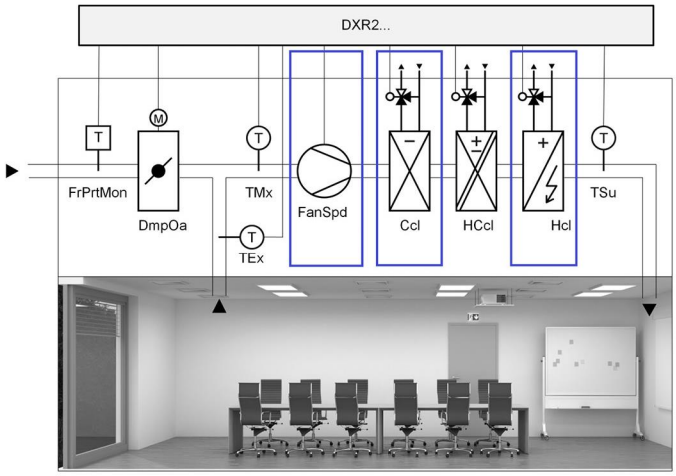

	Frost protection (FrPrtMon)	Outside air damper (DmpOa)	Extract air temperature (TEx)	Mixed air temperature (TMx)	Fan speed (FanSpd)	Cooling coil (Ccl)	Heating/ cooling coil (HCcl)	Heating coil (Hcl)	Supply air temperature (TSu)
DI									
AI									
Relais					3				
Triac						1		1	
0..10 V									
Relais + 0..10 V									

2. Find matching products in overview tables

Products matching application requirements above:

Product Number	Description	Qty
DXR2.E10	Compact room automation stations, BACnet/IP, 230 V	1
QMX3.P34	Room operator unit KNX with temperature sensor, segmented backlit display, touchkeys	1
UP 258D11	Passive infrared presence detector	1
STP121	Electrothermal actuator, AC/DC 24 V, NO, 2P, 1 m	2
VMP47.10-1.6	3-port seat valve with bypass, external thread, PN16, DN10, kvs 1.6	2

Note:
Product overview tables provide quick overview and show main features, nevertheless, we recommend checking technical parameters of each product.

3. Check total data points and bus load

Used DXR2.. on-board data points: 5
KNX PL-Link data points: 5
Total used data points: 10 < **30**
Total KNX PL-Link bus load: 17.5 mA < **50 mA**

Correct, total values do not exceed maximum configuration.

Application configuration

Applications can be configured by combining functions from one or several application types:
- Room sensor and operating
- Radiant (heated/chilled) ceiling and Radiator
- Fan coil
- VAV system or Fan powered box
- Radiant (heated/chilled) ceiling and Radiator
- Lighting
- Shading

Configuration is limited by total number of data points.

Application group Central functions requires dedicated room automation station.

Room Automation Station

Communication					
BACnet/IP	DXR1.E09PDZ-11	DXR1.E09PDZ-11	DXR1.E10PL-112	DXR1.E10PL-113	DXR2.E10PL(X)-102B
Application types					
Room operating	■ (QMX1 only)	■ (QMX1 only)	■	■	■
Heated / Chilled ceiling and Radiator			■	■	■
Fan coil					
VAV system or fan powered box	■	■	■	■	■ ■
Pressurized and fume hood					
Lighting					■
Shading					■
Central functions					
Damper actuator torque	5 Nm	5 Nm	10 Nm	10 Nm	10 Nm
Operating voltage					
24 V	■	■	■	■	■
Inputs and outputs onboard					
Resistor inputs	0	0	0	0	0
Digital inputs	0	0	1	1	1
Universal inputs	2	2	2	2	2
Relay outputs					
Triac outputs	4	4	4	4	4
Analog outputs (DC 0...10 V)	1	1	1	1	1
Pressure sensor	1	1	1	1	1
Maximum configuration					
Total data points	n/a	n/a	n/a	n/a	30 (60)
Integrated power supply for KNX (mA)			50	50	50

3

Configurable controllers

Communication						
BACnet/IP	DXR2.E09-101A	DXR2.E09T-101A	DXR2.E10-101A	DXR2.E12P(X)-102A	DXR2.E18-101A	DXR2.E17C(X)-103A
Application types						
Room operating	■	■	■	■	■	■
Heated / Chilled ceiling and Radiator	■	■	■	■	■	■
Fan coil	■	■	■		■	
VAV system or fan powered box				■	■	■
Pressurized and fume hood						■
Lighting	■	■	■	■	■	■
Shading	■	■	■	■	■	■
Central functions					■*	
Housing						
DIN				■	■	
Flat	■	■	■			
Operating voltage						
230 V	■	■	■			
24 V				■	■	■
Inputs and outputs onboard						
Resistor inputs	0	0	0	0	0	2
Digital inputs	1	1	1	1	2	3
Universal inputs	2	2	2	2	4	4
Relay outputs	3	1	3			
Triac outputs		4	4	6	8	4
Analog outputs (DC 0...10 V)	3	1		2	4	4
Pressure sensor				1		
SCOM communication for sensors						■
Maximum configuration						
Total data points	30	30	30	30 (60)	60	30 (60)
Integrated power supply for KNX (mA)	50	50	50	50	50	50

* Cannot be combined with other applications

HVAC applications

Application types

Fan coil
Application can be configured from these functions:
- Outside Air Damper
- Single Speed Fan, Multi Speed Fan or Variable Speed Fan
- Chilled water cooling coil
- Direct expansion evaporator cooling coil
- Heating/Cooling coil
- Hot water heating coil
- Electric heating coil modulating, single stage or two stage
- Room temperature control by two-pipe system with change-over
- Room temperature control by four-pipe system
- Supply air temperature cascade control
- Room dehumidification control
- Air volume flow control
- Rapid ventilation
- Green leaf

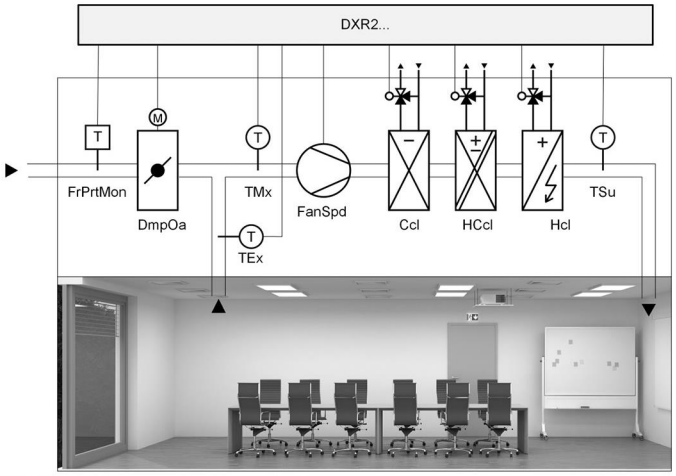

	Frost protection monitor (FrPrtMon)	Outside air damper (DmpOa)	Extract air temperature (TEx)	Mixed air temperature (TMx)	Fan speed (FanSpd)	Cooling coil (Ccl)	Heating/ cooling coil (HCcl)	Heating coil (Hcl)	Supply air temperature (TSu)
DI	1								
AI			1	1					1
Relais					1-3				
Triac		2			1-2	1-2	1, 2, 4 ,8	1-2	
0..10 V		1			1*	1	1, 4	1**	

* Requires additional relais or triac for enable signal
** Requires additional triac for electric heating enable signal

VAV (Variable Air Volume system)
Application can be configured from these functions:
- Supply and extract air control
- External flow control for VAV with integrated flow controller and differential pressure sensor
- Internal flow controller and differential pressure sensor for damper actuator control
- Internal flow controller and velocity sensor for damper actuator control
- Chilled water cooling coil
- Heating/Cooling coil
- Hot water heating coil
- Electric heating coil modulating, single stage or two stage
- Room temperature control by two-pipe system with change-over
- Room temperature control by four-pipe system
- Supply air temperature cascade control
- Air flow tracking for under/overpressure
- Room dehumidification control
- Room air quality control
- Rapid ventilation
- Green leaf

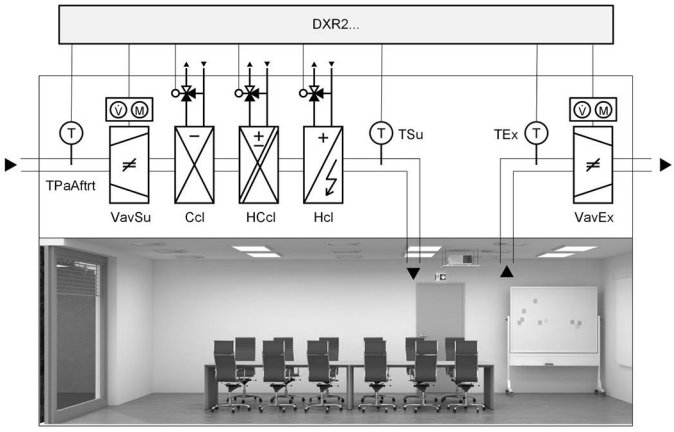

	Primary air temperature for air after-treatment (TPaAftrt)	Supply air VAV (VavSu)	Cooling coil (Ccl)	Heating/ cooling coil (HCcl)	Heating coil (Hcl)	Supply air temperature (TSu)	Extract air temperature (TEx)	Extract air VAV (VavEx)
DI								
AI	1					1	1	
Relais								
Triac		2**	1-2	1, 2, 4 ,8	1-2			2**
0..10 V		1	1	1, 4	1*			1
Actuator for VAV (KNX PL-Link)		1						1

* Requires additional triac for electric heating enable signal
** When using DXR2.. with AC 24 V power supply in combination with GDB181.1E/3 or GLB181.1E/3, use 0..10V signals.

3

Fan powered box
Application can be configured from these functions:
- Supply air control
- External flow control for VAV with integrated flow controller and differential pressure sensor
- Internal flow controller and differential pressure sensor for damper actuator control
- Internal flow controller and velocity sensor for damper actuator control
- Single Speed Fan, 2 speed Fan or Variable Speed Fan
- Chilled water cooling coil
- Heating/Cooling coil
- Hot water heating coil
- Electric heating coil modulating, single stage or two stage
- Room temperature control by two-pipe system with change-over
- Room temperature control by four-pipe system
- Supply air temperature cascade control
- Room air quality control
- Rapid ventilation
- Green leaf

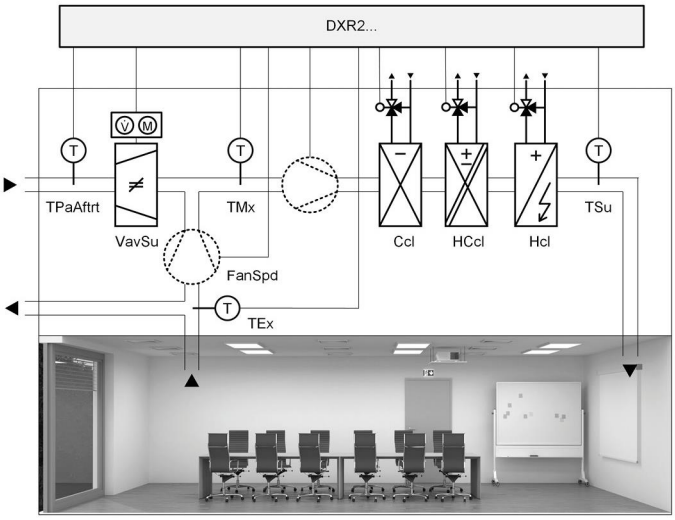

	Primary air temperature for air after-treatment (TPaAftrt)	Supply air VAV (VavSu)	Extract air tempera-ture (TEx)	Mixed air tempera-ture (TMx)	Fan speed (FanSpd)	Cooling coil (Ccl)	Heating/ cooling coil (HCcl)	Heating coil (Hcl)	Supply air tempera-ture (TSu)
DI									
AI	1		1	1					1
Relais									
Triac		2			1–2	1–2	1, 2, 4, 8	1–2	
0..10 V		1			1*	1	1, 4	1**	
Actuator for VAV (KNX PL-Link)		1*							

* Requires additional triac for enable signal
** Requires additional triac for electric heating enable signal

Radiant ceiling and Radiator
Application can be configured from these functions:
- Chilled ceiling with chilled water
- Heated/chilled ceiling by two-pipe system with change-over
- Heated/chilled ceiling by four-pipe system with 6 way valves
- Heating ceiling with hot water
- Hot water radiator
- Electric radiator modulating or staged
- Downdraft compensation for radiators
- Condensation monitor
- Room temperature control
- Green leaf

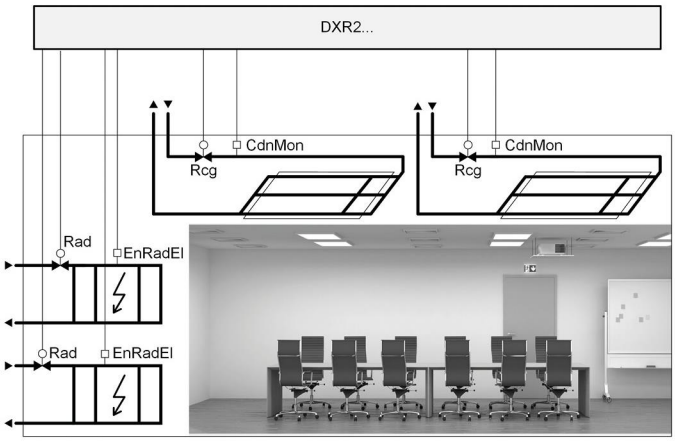

	Radiator (Rad)	Radiator overtemperature (RadOvrT)	Radiant ceiling (Rcg)	Condensation monitor (CdnMon)
DI		1		1
AI				
Relais				
Triac	1–4		1–4	
0..10 V	1–2*		1–2	

* Requires additional triac or relais for electric heating enable signal

Pressurized rooms and fume hoods

Desigo room pressurization and fume hood control is a range of dedicated reliable air volume flow controllers and supplementary components for secure, precise and fast measurement, control and monitoring of air volume flows and room pressures in highly specialized working spaces. It is part of the Desigo building automation and control system.

As a result, the overall system maximizes security, efficiency and cost effectiveness.

Locations:
- Highly specialized research and manufacturing spaces requiring dedicated high speed control solutions for room pressurization & fume hood control
  Rooms in:
  - Research facilities
  - Pharma/Biotech
  - Healthcare
  - Hi-tech manufacturing
  - Vivariums
  - Battery factories
  - Universities
  - Higher education customers etc.

Applications:
- Room ventilation and general extraction, measuring, controlling and monitoring air volume flows
- Room balancing and room pressurization control
- Laboratory fume hood air volume flow control and monitoring
- Room air conditioning together with lighting & shading control
- Fume hood control with stabilizing jet
- Room and fume hood emergency functions
- Demand-controlled ventilation support for energy savings opportunities

ASN	Description	Product picture
DXR2.E17C...	BACnet/IP, 24VAC, 17 I/O Room Pressurization & Fume Hood Automation Station	
QMX3.P87-1WSC	Operating Display Panel – Wall mounted (KNX)	
QMX3.P88-1WSC	Operating Display Panel – Thin & Flush mounted (KNX)	
DXA.S04...	Air Flow Pressure Sensor (SCOM)	
DXA.B...	Sash Sensor	
RPM.S00-SD	Room Condition Monitor	
QVE3001	Flow Sensor	
GAP191.1E	Rotary air damper actuator, 6Nm, 2s	
QBM3020...	Air duct differential pressure sensors	
HLB...	VAV damper	
DXA.FH02-1	Fume Hood Installation Box	

3

Room sensor and operating

Application can be configured from these functions:
- Room operating units QMX3 on KNX PL-Link
- Sensors for onboard IO's or KNX PL-Link
- Presence/brightness sensors for onboard IO's or KNX PL-Link

	Temperature sensor	Air quality Sensor	Humidity sensor	Presence detector
DI				2
AI	1	1	1	
HVAC Sensor (KNX PL-Link)	1	1	1	
Presence and brightness sensor (KNX PL-Link)				1–4*
Room unit (KNX PL-Link)	1	1	1	

* Must be the same device

	Window contact	Room operator unit
DI	1	
Room unit (KNX PL-Link)		2*

* Must be the same device

Central functions

Application can be configured from these functions:
- Central operation group including room operating mode and start optimization, setpoints and seasonal compensation
- Demand controlled hot water supply system, includes temperature setpoint
- Demand controlled chilled water supply system, includes temperature setpoint, shift to avoid condensation by collecting condensation monitors, free cooling calculation
- Demand controlled 2 pipe heating / cooling water supply system includes temperature setpoint, changeover, free cooling calculation
- Demand controlled air handling unit (supply and extract air) includes temperature setpoint, maximum humidity setpoint, pressure setpoint, maintain minimal central air volume, flow deviation calculation, summed air volume setpoints
- Variable air volume (VAV) emergency group includes shut down, extract, pressurization or purge
- Central weather station information includes outside temperature, outside brightness, outside solar radiation, outside wind speed, outside precipitation

	Central Weather Station Controller					Central Emergency Controller		
	Outside temperature	Relative outside humidity	Atmospheric pressure	Wind speed	Precipitation detector	Forced Emergency shut down air supply	Forced Smoke extraction (exhaust air)	Forced Smoke pressurization (supply air)
DI					1	1–2	1–2	1–2
AI	1	1	1	1				
Push button (KNX PL-Link)								
DXR2.. Type	DXR2..18..					DXR2..18..		

Room units

	QMX3..P35H	QMX2..P33	QMX2..P43	QMX3..P36	QMX3..P34	QMX3..P74
Features						
Mode selection	■	■	■	■	■	■
Fan switch	■	■	■	■	■	■
Setpoint adjuster	■	■	■	■	■	■
Temperature sensor	■	■	■	■	■	■
Humidity sensor			■			■
Air quality sensor						■
Green Leaf	■			■	■	■
Mounting						
Flush mounted	■			■		
Direct on wall		■	■		■	■
Integration into DXR2...						
Data points	3	3	3	3	3	5
KNX PL-Link bus load (mA)	15	7.5	7.5	12.5	7.5	15

HVAC Sensor (KNX PL-Link)

	AQR2570... and AQR2532NNW	AQR2570... and AQR2535NNW	AQR2576... and AQR2530NNW	AQR2576... and AQR2532NNW	AQR2576... and AQR2535NNW	AQR2576... and AQR253NNWQ	QMX3.P30	QMX3.P40	QMX3.P70
Features									
LED indication air quality						■			■
Temperature sensor	■	■		■	■	■	■	■	■
Humidity sensor		■			■	■		■	■
Air quality sensor			■	■	■	■			■
Mounting									
Flush mounted	■	■	■	■	■	■			
Direct on wall							■	■	■
Integration into DXR2...									
Data points	1	2	1	2	3	3	1	2	3
KNX PL-Link bus load (mA)	5	5	15	15	15	15	7.5	7.5	15

3

Physical Sensors with KNX connection

Type	UP 258D31	UP 258D41	UP 258D51	UP 258D61
Features				
Mounting[1]	UP/AP	UP/AP	UP/AP	UP/AP
Degree of protection	IP54	IP20	IP20	IP20
Presence detector	■	■	■	■
Detection capability	PIR	PIR	PIR	Ultrasound[2]/PIR
Presence detection area at mounting height 2.5 m (m²)	64	64	64	28
Motion detection area at mounting height 2.5 m (m²)	400	400	400	79
Brightness sensor	■	■	■	■
Temperature sensor	■	■	■	■
Humidity sensor		■	■	
CO_2 sensor			■	
Infrared (IR) receiver	■	■	■	■
Data points	3	4	5	3
KNX PL-Link bus load (mA)	12.5	12.5	30	20

[1] AP surface mounted, UP flush mounted
[2] see technical datasheet for reference

Presence and brightness sensor (KNX PL-Link)

Type	UP 255D21	UP 258D12
Features		
Presence detector		■
Detection area at mounting height 2.5 m (m²)		4.5
Brightness sensor	■	■
Integration into DXR2..		
Data points	2	2
KNX PL-Link bus load (mA)	10	10

Actuator for VAV (KNX PL-Link)

Type	GDB181.1E/KN	GLB181.1E/KN
Features		
Torque (Nm)	5	10
Air damper area (m²)	0.8	1.5
Operating range (Pa)	0...300	0...300
Operating voltage (V AC)	24	24
Integration into DXR2..		
Data points	2	2
KNX PL-Link bus load (mA)	5	5

Room controller with KNX communication

RXB2..

The controllers are used for temperature control in individual rooms.
- For 2-pipe with changeover or 4-pipe fan coil systems
- For radiator and chilled ceiling (RXB24.1 only)
- Control of thermal valve actuators AC 24 V, PWM, valve actuators AC 24 V (3-position) as well as KNX bus actuators
- Potential-free relay contacts for fan speed control
- Connecting relay for electric heating (RXB22.1 und RXB39.1)
- KNX bus communication
- Connection to Desigo building automation and control system via PX KNX
- Commissioning with "Handy Tool" QAX34.3 or Synco ACS

Application description fan coil: CM110672
Application description RAD/CLC: CM110671

Operating voltage	AC 230 V
Frequency	50/60 Hz
Power consumption	Max. 12 VA
Control Algorithm	PI
Communication	Bus: KNX (S-mode and LTE mode) Room unit: PPS2
Digital inputs, number	2
Relay output, switching voltage	AC 250 V
Relay output, switching current	5 (4) A
Triac outputs	PWM 3-position
Triac output, switching voltage	AC 24 V
Triac output, switching current	0.5 A
Interface type	KNX-bus
Mounting	DIN rail
Mounting location	Ceiling voids with cover Fan coil Panel
Degree of protection	IP30
Dimensions (W x H x D)	113 x 167 x 62 mm

Range overview RXB2..

Product Title	Triac outputs, number	Relay outputs, number	Data sheet	Stock no.	Product no.
Room controller for 3-speed fan	4	3	N3873	BPZ:RXB21.1/FC-10	**RXB21.1/FC-10**
Room controller for 3-speed fan	4	3	N3873	BPZ:RXB21.1/FC-11	**RXB21.1/FC-11**
Room controller with 3-speed fan and electric heating coil	2	4	N3873	BPZ:RXB22.1/FC-12	**RXB22.1/FC-12**
Room controller for chilled ceilings and radiators	4	0	N3874	BPZ:RXB24.1/CC-02	**RXB24.1/CC-02**

The application determines the usable actuator (PWM /3-position) with the triac output.

3

RXB39.1/FC-13

Room controller for fan-coil applications with KNX communication

The RXB39.1 room controller is used for temperature control in individual rooms.

- For 2-pipe and 4-pipe fan coil systems with or without changeover
- PI control
- KNX bus communication
- Connection to Desigo building automation and control system via PX KNX
- DC 0...10 V control of valve and actuators, fan (ECM), and electric heater
- 2 Potential-free relay contacts to release fan and electric heating
- Commissioning with ETS Professional, "Handy Tool" QAX34.3 or Synco ACS
- Operating voltage AC 230 V
- Plug-in screw terminals

Data sheet	N3875
Operating voltage	AC 230 V
Frequency	50/60 Hz
Power consumption	12 VA
Control Algorithm	PI
Communication	Bus: KNX Room unit: PPS2
Analog inputs, number	2
Analog outputs, number	3
Analog output, signal	DC 0...10 V
Digital inputs, number	4
Relay outputs, number	1
Electric reheater relay	1
Relay outputs	Change-over contact
Relay output, switching voltage	250 V
Relay output, switching current	5 (4)A
Dimension width (1 MW = 18 mm)	9.5 MW
Mounting	DIN rail For screw fixing
Mounting location	Ceiling voids with cover Fan coil Panel
Degree of protection	IP20
Dimensions (W x H x D)	152 x 120 x 62 mm
Product conformity	CE RCM
Warranty	24 Months

Stock no.	Product no.
S55373-C121	**RXB39.1/FC-13**

Accessories for RXB..

Product Title	Data sheet	Stock no.	Product no.
Power supply unit DC 29 V, 160 mA with additional unchoked output, N 125/02	A6V10416069	5WG1125-1AB02	**N 125/02**
Power supply unit DC 29 V, 320 mA with additional unchoked output, N 125/12	A6V10416069	5WG1125-1AB12	**N 125/12**
Power supply unit DC 29 V, 640 mA with additional unchoked output, N 125/22	A6V10416069	5WG1125-1AB22	**N 125/22**
Terminal cover for RXB2..	N3834	BPZ:RXZ20.1	**RXZ20.1**
Power amplifier for thermal actuators AC 24 V, PWM	N3591	BPZ:UA1T	**UA1T**
Terminal cover for RXB3..	N3840	BPZ:RXZ30.1	**RXZ30.1**

Temperature sensors for RXB..

Product Title	Data sheet	Stock no.	Product no.
Duct temperature sensor 400 mm, LG-Ni1000	N1761	BPZ:QAM2120.040	**QAM2120.040**
Room temperature sensor LG-Ni1000	N1721	BPZ:QAA24	**QAA24**
Room sensor KNX for temperature, white	N1602	S55624-H103	**QMX3.P30**
Room temperature sensor LG-Ni1000 for mounting on recessed conduit boxes	N1722	BPZ:QAA64	**QAA64**
Front modules with passiv temperature measurement	N1408	BPZ:AQR2531..	**AQR2531..**
Cable temperature sensor PVC 2 m, LG-Ni1000	N1831	BPZ:QAP22	**QAP22**

Dewpoint sensor for RXB..

Product Title	Data sheet	Stock no.	Product no.
Condensation monitor	A6V10741072	BPZ:QXA21..	**QXA21..**

Damper actuators for RXB..

Product Title	Data sheet	Stock no.	Product no.
Rotary air damper actuators 5 Nm, without spring return	A6V10636149 / A6V10881141	BPZ:GDB..1E	**GDB..1E**
Linear air damper actuators 125 N, without spring return	N4664	BPZ:GDB..2E	**GDB..2E**
Rotary air damper actuators 10 Nm, without spring return	A6V10636202 / A6V10881141	BPZ:GLB..1E	**GLB..1E**
Linear air damper actuators 250 N, without spring return	N4664	BPZ:GLB..2E	**GLB..2E**
Mounting Bracket, BG	N4698	S55859-Z115	**ASK71.04**
Position Indicator, BG	N4698	S55859-Z116	**ASK71.05**
Mounting Bracket, BG, short	N4698	S55859-Z119	**ASK71.08**
Centering insert 2 x square 10 mm	N4698	S55859-Z123	**ASK71.21**
Rotary air damper actuator, AC/DC 24 V, 5 Nm with Modbus RTU comminucation	-	S55499-D852	**GDB161.1E/MO**

Valve actuators for RXB..

Product Title	Data sheet	Stock no.	Product no.
Electromotoric actuator, 200 N, 5.5 mm, AC 24 V, 1.5 m, 3P	N4891	BPZ:SSB81	**SSB81**
Electromotoric actuator, 160 N, 2.5 mm, 1.5 m, AC 24 V, 3P	N4864	BPZ:SSP81	**SSP81**

3

QAX3..

Room unit with PPS2 interface

Room units for acquiring the room temperature and operation of individual room control.

Voltage supply	PPS2
Power consumption	0.10 VA
Time constant	≤8 min
Measuring range, temperature	0...40 °C
Sensing element, temperature	NTC
Measurement accuracy	±0.25 K at 25 °C ±0.5 K at 5...30 °C
Setpoint readjustment range	±12 K
Mounting location	Indoors
Degree of protection	IP30

QAX30.1

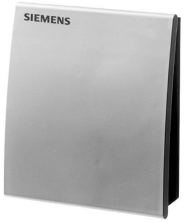

Room unit with sensor and PPS2 interface

- Acquisition of room temperature

Data sheet	N1741
Dimensions (W x H x D)	90 x 100 x 32 mm

Stock no.	Product no.
BPZ:QAX30.1	**QAX30.1**

QAX31.1

Room unit with sensor, setpoint adjuster and PPS2 interface

- Acquisition of room temperature
- Setpoint adjuster for room temperature

Data sheet	N1741
Dimensions (W x H x D)	90 x 100 x 36 mm

Stock no.	Product no.
BPZ:QAX31.1	**QAX31.1**

QAX32.1

Room unit with sensor, setpoint and operating mode selector and PPS2 interface

- Acquisition of room temperature
- Setpoint adjuster for room temperature
- Rocker switch for mode selection (Off / Auto)

Data sheet	N1641
Dimensions (W x H x D)	90 x 100 x 36 mm

Stock no.	Product no.
BPZ:QAX32.1	**QAX32.1**

Room unit with sensor, setpoint and operating mode selector, fan speed selection, and PPS2 interface

QAX33.1

- Acquisition of room temperature
- Setpoint adjuster for room temperature
- Rocker switch for mode selection (Off/Auto) and for manual fan control with fan coil systems (up to 3 speeds)

Data sheet	N1642
Dimensions (W x H x D)	90 x 100 x 36 mm

Stock no.	Product no.
BPZ:QAX33.1	**QAX33.1**

Room unit with sensor, setpoint and operating mode selector, display and PPS2 interface

QAX34.3

- Acquisition of room temperature
- Rocker switch for adjustment of room temperature setpoint
- Rocker switch for mode selection (Off/Auto) and for manual fan control with fan coil systems (up to 3 speeds)
- LCD with display of room temperature and control mode
- Together with the RXB controllers for parameter setting

Data sheet	N1640
Dimensions (W x H x D)	96 x 119 x 24 mm

Stock no.	Product no.
BPZ:QAX34.3	**QAX34.3**

3

RMB795B-1

Central control unit for room controllers and room thermostats

- Central control unit with integrated control and supervisory functions for individual room control with RXB room controllers and room thermostats RDG/RDF
- Central collection of heating and cooling demands from any KNX room controllers
- Control of any HVAC primary controllers in dependence on the received and calculated heating/cooling demands
- Individual time programs for room groups
- Preselected operating modes and setpoints, minimum / maximum temperature supervision and supervision of RXB room controllers and room thermostats RDG/RDF
- Trend and fault reporting functions for the input variables temperature, relative / absolute humidity, pressure / differential pressure, volumetric air flow, indoor air quality, etc.
- Heating / cooling changeover function for operation with 2-pipe systems
- Flexible configuration
- Clear-text operation with separate operator unit (plug-in type or detached)
- Integrated KNX bus communication
- No commissioning tool required

The RMB795B-1 supports the languages: English, German, French, Italian, Spanish, Portuguese, Dutch, Danish, Finnish, Norwegian, Swedish, Polish, Czech, Hungarian, Russian, Slovak, Bulgarian, Greek, Romanian, Slovenian, Serbian, Croatian, Turkish, Chinese.

Extension modules complement the central control unit and offer extra functions. They are attached to the controller via plug-in connectors. The extension modules do not operate autonomously.
The operation of the device from commissioning to enduser operation can be done via the operator unit.
Available extension modules:
- 1 universal module RMZ785
- 2 universal modules RMZ787

A total of 3 extension modules can simultaneously be used with the central control unit.

Available operator units:
- Plug-in type operator unit RMZ790
- Detached operator unit RMZ791
- Bus operator unit RMZ792

Data sheet	N3122
Operating voltage	AC 24 V
Frequency	50/60 Hz
Power consumption	12 VA
Communication	KNX (KNX TP1)
Analog outputs, number	2
Analog output, signal	DC 0...10 V
Analog output, current	Max. 1 mA
Digital outputs, number	4
Universal inputs, number	6
Universal input, signal	2 x LG-Ni1000 DC 0...10 V Potential-free digital status contact LG-Ni1000 Pt1000 T1 (PTC)
Relay outputs, number	4
Relay output, switching voltage	AC 19...250 V
Relay output, switching current	4 (3) A
Mounting	DIN rail
Degree of protection	IP20
Dimensions (W x H x D)	173 x 90 x 80 mm
Warranty	24 Months

Stock no.	Product no.
S55370-C162	**RMB795B-1**

Compact room automation station, BACnet/IP, 24 V, DIN housing, 1 DI, 2 UI, 2 AO, 6 triac, pressure sensor

DXR2.E12P..

Compact room automation stations for HVAC, lighting, and shading:
- BACnet/IP communications
- KNX PL-Link bus to connect sensors, actuators, and operator units (including bus power)
- KNX S-Mode device integration
- 2-port Ethernet switch
- USB interface for Tool

Data sheet	N9205
Operating voltage	AC 24 V
Frequency	50/60 Hz
Power consumption	70 VA
Communication	BACnet/IP KNX PL-Link KNX S-Mode
Universal inputs, number	2
Digital inputs, number	1
Analog outputs, number	2
Analog output, signal	DC 0...10 V
Analog output, current	1 mA
Triac outputs, number	6
Triac output, switching voltage	AC 24 V
Triac output, switching current	250 mA
Mounting	Inside rooms Directly on the damper shaft Front mounting
Degree of protection	IP20
Dimensions (W x H x D)	180 x 60 x 105 mm

Range overview DXR2.E12P..

Product Title	Stock no.	Product no.
Compact room automation station, BACnet/IP, 24 V, DIN housing, 1 DI, 2 UI, 2 AO, 6 triac, pressure sensor, 30 data points	S55376-C108	**DXR2.E12P-102A**
Compact room automation station, BACnet/IP, 24 V, DIN housing, 1 DI, 2 UI, 2 AO, 6 triac, pressure sensor, 30 data points, bulk pack 18 pcs.	S55376-C163	**DXR2.E12P-102A/BP**

3

DXR2.E18..

Compact room automation station, BACnet/IP, 24 V, DIN housing, 2 DI, 4 UI, 4 AO, 8 triac

Compact room automation stations for HVAC, lighting, and shading:
- BACnet/IP communications
- KNX PL-Link bus to connect sensors, actuators, and operator units (including bus power)
- KNX S-Mode device integration
- 2-port Ethernet switch
- USB interface for Tool

Data sheet	N9205
Operating voltage	AC 24 V
Frequency	50/60 Hz
Power consumption	78 VA
Communication	BACnet/IP KNX PL-Link KNX S-Mode
Universal inputs, number	4
Digital inputs, number	2
Analog outputs, number	4
Analog output, signal	DC 0...10 V
Analog output, current	1 mA
Triac outputs, number	8
Triac output, switching voltage	AC 24 V
Triac output, switching current	250 mA
Mounting	Inside rooms Directly on the damper shaft Front mounting
Degree of protection	IP20
Dimensions (W x H x D)	180 x 105 x 60 mm

Range overview DXR2.E18..

Product Title	Stock no.	Product no.
Compact room automation station, BACnet/IP, 24 V, DIN housing, 2 DI, 4 UI, 4 AO, 8 triac, (Fancoil, Radiant ceilling, Radiator, 4 Lights & 2 Shades)	S55376-C107	**DXR2.E18-101A**
Compact room automation station, BACnet/IP, 24 V, DIN housing, 2 DI, 4 UI, 4 AO, 8 triac, bulk pack 18 pcs.	S55376-C162	**DXR2.E18-101A/BP**
Compact room automation station, BACnet/IP, 24 V, DIN housing, 2 DI, 4 UI, 4 AO, 8 triac, (Variable air volume, Fan-powered box, Radiant ceilling, Radiator, 4 Lights & 2 Shades)	S55376-C128	**DXR2.E18-102A**
Compact room automation station, BACnet/IP, 24 V, DIN housing, 2 DI, 4 UI, 4 AO, 8 triac, bulk pack 18 pcs.	S55376-C167	**DXR2.E18-102A/BP**

Compact room automation station, BACnet/IP, 230 V, flat housing, 1 DI, 2 UI, 3 relay, 3 AO

DXR2.E09..

Compact room automation stations for HVAC, lighting, and shading:
- BACnet/IP communications
- KNX PL-Link bus to connect sensors, actuators, and operator units (including bus power)
- KNX S-Mode device integration
- 2-port Ethernet switch
- USB interface for Tool

Data sheet	N9204
Operating voltage	AC 230 V
Frequency	50/60 Hz
Power consumption	24 VA
Communication	BACnet/IP KNX PL-Link KNX S-Mode
Universal inputs, number	2
Digital inputs, number	1
Analog outputs, number	3
Analog output, signal	DC 0...10 V
Analog output, current	1 mA
Relay outputs, number	3
Relay output, switching voltage	AC 250 V
Relay output, switching current	4 (3) A
Mounting	Inside rooms Directly on the damper shaft Front mounting
Degree of protection	IP20
Dimensions (W x H x D)	112 x 165 x 49 mm

Range overview DXR2.E09..

Product Title	Stock no.	Product no.
Compact room automation station, BACnet/IP, 230 V, flat housing, 1 DI, 2 UI, 3 relay, 3 AO	S55376-C110	**DXR2.E09-101A**
Compact room automation station, BACnet/IP, 230 V, flat housing, 1 DI, 2 UI, 3 relay, 3 AO, bulk pack 18 pcs.	S55376-C165	**DXR2.E09-101A/BP**

3

DXR2.E09T..

Compact room automation station, BACnet/IP, 230 V, flat housing, 1 DI, 2 UI, 1 relay, 1 AO, 4 triac

Compact room automation stations for HVAC, lighting, and shading:
- BACnet/IP communications
- KNX PL-Link bus to connect sensors, actuators, and operator units (including bus power)
- KNX S-Mode device integration
- 2-port Ethernet switch
- USB interface for Tool

Data sheet	N9204
Operating voltage	AC 230 V
Frequency	50/60 Hz
Power consumption	24 VA
Communication	BACnet/IP KNX PL-Link KNX S-Mode
Universal inputs, number	2
Digital inputs, number	1
Analog outputs, number	1
Analog output, signal	DC 0...10 V
Analog output, current	1 mA
Relay outputs, number	1
Relay output, switching voltage	AC 250 V
Relay output, switching current	4 (3) A
Triac outputs, number	4
Triac output, switching voltage	AC 24 V
Triac output, switching current	150 mA
Mounting	Inside rooms Directly on the damper shaft Front mounting
Degree of protection	IP20
Dimensions (W x H x D)	112 x 165 x 49 mm

Range overview DXR2.E09T..

Product Title	Stock no.	Product no.
Compact room automation station, BACnet/IP, 230 V, flat housing, 1 DI, 2 UI, 1 relay, 1 AO, 4 triac	S55376-C111	**DXR2.E09T-101A**
Compact room automation station, BACnet/IP, 230 V, flat housing, 1 DI, 2 UI, 1 relay, 1 AO, 4 triac, bulk pack 18 pcs.	S55376-C166	**DXR2.E09T-101A/BP**

Compact room automation station, BACnet/IP, 230 V, flat housing, 1 DI, 2 UI, 3 relay, 4 triac

DXR2.E10..

Compact room automation stations for HVAC, lighting, and shading:
- BACnet/IP communications
- KNX PL-Link bus to connect sensors, actuators, and operator units (including bus power)
- KNX S-Mode device integration
- 2-port Ethernet switch
- USB interface for Tool

Operating voltage	AC 230 V
Frequency	50/60 Hz
Power consumption	24 VA
Communication	BACnet/IP KNX PL-Link KNX S-Mode
Universal inputs, number	2
Digital inputs, number	1
Relay outputs, number	3
Relay output, switching voltage	AC 250 V
Relay output, switching current	4 (3) A
Triac outputs, number	4
Triac output, switching voltage	AC 24 V
Triac output, switching current	150 mA
Mounting	Inside rooms Directly on the damper shaft Front mounting
Degree of protection	IP20
Dimensions (W x H x D)	112 x 165 x 49 mm

Range overview DXR2.E10..

Product Title	Stock no.	Product no.
Compact room automation station, BACnet/IP, 230 V, flat housing, 1 DI, 2 UI, 3 relay, 4 triac, bulk pack 18 pcs.	S55376-C164	**DXR2.E10-101A/BP**
Compact room automation station, BACnet/IP, 230 V, flat housing, 1 DI, 2 UI, 3 relay, 4 triac	S55376-C109	**DXR2.E10-101A**

3

DXR2.E10PL..

Compact room automation stations, BACnet/IP, 24 V

Compact room automation stations for HVAC, lighting, and shading:
- BACnet/IP communications
- KNX PL-Link bus to connect sensors, actuators, and operator units (including bus power)
- KNX S-Mode device integration
- 2-port Ethernet switch
- USB interface for Tool

Data sheet	A6V11259958
Operating voltage	AC 24 V
Frequency	50/60 Hz
Power consumption	Max. 66 VA
Communication	BACnet/IP KNX PL-Link KNX S-Mode
Universal inputs, number	3
Triac outputs, number	4
Triac output, switching voltage	AC 24 V
Triac output, switching current	150 mA
Degree of protection	IP20
Dimensions (W x H x D)	201 x 137 x 82 mm

Range overview DXR2.E10PL..

Product Title	Stock no.	Product no.
Compact room automation station and actuator combination, BACnet/IP, 24 V, 1 DI, 2 UI, 1 AO, 4 triac, pressure sensor, 30 data points	S55376-C145	**DXR2.E10PL-102B**
Compact room automation station, BACnet/IP, 24 V, DIN housing, 1 DI, 2 UI, 1 AO, 4 triac, pressure sensor, 60 data points	S55376-C146	**DXR2.E10PLX-102B**

Accessories for Desigo DXR2..

Product Title	Data sheet	Stock no.	Product no.
Terminal cover for DXR.., 110 mm, 2 pieces		S55376-C119	**DXA.H110**
Terminal cover for DXR.., 180 mm, 2 pieces		S55376-C120	**DXA.H180**

Compact Room Automation Station (30DP)

DXR2.E17C-103A

Compact room automation stations for HVAC, lighting, and shading:
- BTL Listed and a BACnet Advanced Application Controller (B-AAC) device
- BACnet/IP communications
- KNX PL-Link bus to connect sensors, actuators, and operator units (including bus power)
- KNX S-Mode device integration
- 2-port Ethernet switch
- USB interface for Tool
- Dedicated SCOM communication for fast and high resolution sensor input

Applications: Pressurized room, fume hood control, variable and constant volume flow, chilled beam, radiant ceiling, radiator, 4 lights & 2 shades

Data sheet	N9205
Operating voltage	AC 24 V
Frequency	50/60 Hz
Power consumption	66 VA
Communication	BACnet/IP KNX PL-Link KNX S-Mode SCOM
Universal inputs, number	4 UI, 2 resistive
Digital inputs, number	3
Analog outputs, number	4
Analog output, signal	DC 0...10 V
Analog output, current	1 mA
Triac outputs, number	4
Triac output, switching voltage	24 V
Triac output, switching current	0.5 A
Mounting	Inside rooms Directly on the damper shaft Front mounting
Degree of protection	IP20
Dimensions (W x H x D)	180 x 105 x 60 mm
Warranty	12 Months

	Stock no.	Product no.
	S55376-C134	**DXR2.E17C-103A**

3

DXR2.E17CX-103A

Compact Room Automation Station (60DP)

Compact room automation stations for HVAC, lighting, and shading:
- BTL Listed and a BACnet Advanced Application Controller (B-AAC) device
- BACnet/IP communications
- KNX PL-Link bus to connect sensors, actuators, and operator units (including bus power)
- KNX S-Mode device integration
- 2-port Ethernet switch
- USB interface for Tool
- Dedicated SCOM communication for fast and high resolution sensor input

Applications: Variable air volume, Fan-powered box, Radiant ceilling, Radiator, 4 Lights & 2 Shades

Data sheet	N9205
Operating voltage	AC 24 V
Frequency	50/60 Hz
Power consumption	66 VA
Communication	BACnet/IP KNX PL-Link KNX S-Mode SCOM
Universal inputs, number	4 UI, 2 resistive
Digital inputs, number	3
Analog outputs, number	4
Analog output, signal	DC 0...10 V
Analog output, current	1 mA
Triac outputs, number	4
Triac output, switching voltage	24 V
Triac output, switching current	0.5 A
Mounting	DIN rail Wall mounting
Degree of protection	IP20
Dimensions (W x H x D)	180 x 105 x 60 mm
Warranty	12 Months

Stock no.	Product no.
S55376-C150	**DXR2.E17CX-103A**

Accessories room pressurization

Product Title	Data sheet	Stock no.	Product no.
Rotary air damper actuator, AC/DC 24 V, DC 0(2)...10 V/ 0(4)...20 mA, 6 Nm, 2 s	N4608	BPZ:GAP191.1E	**GAP191.1E**
Rotary air damper actuators 6 Nm, without electronic fail-save function	A6V11991159	S55499-D639	**GAP191.1E/IHT**
Rotary air damper actuator, AC/DC 24 V, DC 0(2)...10 V / 0(4)...20 mA, 6 Nm, 2 s, with electronic fail-save function	N4609	BPZ:GNP191.1E	**GNP191.1E**
Air duct differential pressure sensor, 0...100 Pa	N1916	S55720-S234	**QBM3020-1**
Air duct differential pressure sensor, 0...300 Pa for VAV	N1925	S55720-S118	**QBM3460-3**
Duct sensor for air velocity	N1932	BPZ:QVM62.1	**QVM62.1**
Communicative Air Flow Pressure Sensor (250 Pa / 1"WC)		S55376-C139	**DXA.S04P1**
Air duct differential pressure sensor, -50...50 Pa	N1916	S55720-S233	**QBM3020-1U**
Communicative Air Flow Pressure Sensor IP54 (250 Pa / 1"WC)		S55376-C140	**DXA.S04P1-B**
Air duct differential pressure sensor, 0...300 Pa	N1916	S55720-S235	**QBM3020-3**
Room Condition Monitor		S55624-H130	**RPM.00-SD**
Room Condition Monitor with Pressure Sensor (+-12 Pa / +-0.05"WC)		S55624-H131	**RPM.12-SD**
Room Condition Monitor with Pressure Sensor (+-25 Pa / +-0.1"WC)		S55624-H132	**RPM.25-SD**
Room Condition Monitor with Pressure Sensor (+-62 Pa / +-0.25"WC)		S55624-H133	**RPM.62-SD**
Room Condition Monitor with Pressure Sensor (+-125 Pa / +-0.5"WC)		S55624-H134	**RPM.125-SD**
Room Condition Monitor with Pressure Sensor (+-250 Pa / +-1.0"WC)		S55624-H135	**RPM.250-SD**

Accessories fume hood control

Product Title	Data sheet	Stock no.	Product no.
Control Module Box	A6V11438329	5WG1118-4AB01	**AP 118/01**
DXA.FH02-1 Fume Hood Control Box	A6V12987470	S55376-C200	**DXA.FH02-1**
Rotary air damper actuator, AC/DC 24 V, DC 0(2)...10 V/ 0(4)...20 mA, 6 Nm, 2 s	N4608	BPZ:GAP191.1E	**GAP191.1E**
VAV damper short, 315	A6V12987473	S55376-C203	**HLBAA00315QF**
VAV damper ultra short, 200	A6V12987473	S55376-C201	**HLBHA00200QF**
VAV damper ultra short, 250	A6V12987473	S55376-C202	**HLBHA00250QF**
Fume Hood Operator Display (Thin and Flush Mount)	A6V10959882	S55624-H112	**QMX3.P88-1WSC**
Flow sensor		S55720-S397	**QVE3001**
Fume Hood Operator Display (Wide)		S55624-H111	**QMX3.P87-1WSC**
Communicative Air Flow Pressure Sensor (250 Pa / 1"WC)		S55376-C139	**DXA.S04P1**
Communicative Air Flow Pressure Sensor IP54 (250 Pa / 1"WC)		S55376-C140	**DXA.S04P1-B**
Cable Sash Sensor, 1270 mm	A6V11178716	S55376-C158	**DXA.B130**
Cable Sash Sensor, 2032 mm	A6V11178716	S55376-C159	**DXA.B200**
Switching actuator 1 x AC 230 V, 16 AX, C load	A6V10416159	5WG1512-4AB23	**RL 512/23**

3

QMX2.P33

Room operator unit for KNX PL-Link, room temperature sensor

Functionality:
- Room temperature sensor
- LCD display of room temperature, operating modes, etc.
- Operation with 8 push buttons
- Interface KNX PL-Link (for TRA, with plug and play functionality)
- Powered over KNX PL-Link

Data sheet	A6V10733768
Operating voltage	DC 21...30 V
Power consumption	Max. 7...10 mA
Measuring range, temperature	0...50 °C
Communication	KNX PL-Link
Mounting	Wall mounting
Degree of protection	Housing Protection: IP30 Protection standard as per EN 60529: IP33 for surface part
Dimensions (W x H x D)	89 x 133 x 21 mm
Weight (net)	0.146 kg
Warranty	24 Months

Stock no.	Product no.
S55624-H118	**QMX2.P33**

QMX2.P43

Room operator unit for KNX PL-Link, room temperature sensor and humidity sensor

Functionality:
- Room temperature sensor
- Humidity sensor
- LCD display of room temperature, operating modes, etc.
- Operation with 8 push buttons
- Interface KNX PL-Link (for TRA, with plug and play functionality)
- Powered over KNX PL-Link

Data sheet	A6V10733768
Operating voltage	DC 21...30 V
Power consumption	Max. 7...10 mA
Measuring range, temperature	0...50 °C
Communication	KNX PL-Link
Mounting	Wall mounting
Degree of protection	Housing Protection: IP30 Protection standard as per EN 60529: IP33 for surface part
Dimensions (W x H x D)	89 x 133 x 21 mm
Weight (net)	0.146 kg
Warranty	24 Months

Stock no.	Product no.
S55624-H117	**QMX2.P43**

Room operator unit KNX PL-Link with temperature sensor, Dot matrix backlit display, touchscreen

QMX3.P..H..

Functions:
* Temperature sensor
* Dot matrix backlit display and touch screen
* PM2.5 and CO2 display

Data sheet	A6V11521633
Operating voltage	DC 21...30 V
Voltage supply	KNX PL-Link
Power consumption	Max. 15 mA at DC 24 V
Measuring range	0...50 °C
Measuring range, temperature	0...50 °C
Mounting location	Recommended height: 1.50 m above floor.
Degree of protection	IP30

Room operator unit KNX PL-Link with temperature sensor, Dot matrix backlit display, touchscreen, white

QMX3.P35H

Functions:
- Temperature sensor
- Dot matrix backlit display and touch screen
- PM2.5 and CO2 display

Data sheet	A6V11521633
Dimensions (W x H x D)	86.2 x 88.2 x 17.2 mm

Stock no.	Product no.
S55624-H137	**QMX3.P35H**

Room operator unit KNX PL-Link with temperature sensor, Dot matrix backlit display, touchscreen, black

QMX3.P35H-BSC

Functions:
- Temperature sensor
- Dot matrix backlit display and touch screen
- PM2.5 and CO2 display

Data sheet	A6V11521633
Dimensions (W x H x D)	86.2 x 88.2 x 17.2 mm

Stock no.	Product no.
S55624-H139	**QMX3.P35H-BSC**

3

QMX3.P38H

Room operator unit KNX PL-Link with temperature sensor, Dot matrix backlit display, touchscreen, Lighting/Blinds, white

Functions:
- Temperature sensor
- Dot matrix backlit display and touch screen
- PM2.5 and CO2 display
- Lighting/Blinds Control

Data sheet	A6V11521633
Dimensions (W x H x D)	86.2 x 88.2 x 17.2 mm

Stock no.	Product no.
S55624-H138	**QMX3.P38H**

QMX3.P38H-BSC

Room operator unit KNX PL-Link with temperature sensor, Dot matrix backlit display, touchscreen, Lighting/Blinds, black

Functions:
* Temperature sensor
* Dot matrix backlit display and touch screen
* PM2.5 and CO2 display
* Lighting/Blinds Control

Data sheet	A6V11521633
Dimensions (W x H x D)	86.2 x 88.2 x 17.2 mm

Stock no.	Product no.
S55624-H140	**QMX3.P38H-BSC**

QMX3.P36..

Room sensor and unit for KNX PL-Link, freely configurable, flush-mounted

The flush-mounted room unit QMX3.. consists of:
– Operator unit
– Bezel, titanium white
– Base plate and KNX plug.

Functionality:
- Freely configurable user interface (keys and visual items) as part of Total Room Automation
- RoomOptiControl energy efficiency function
- Room temperature measurement
- Display of room temperature, control mode, scenes etc. (dot matrix LCD)
- Backlit display, white or blue selection
- KNX PL-Link interface to the room automation station with plug & play functionality
- Can be combined with different standard and design bezels

Data sheet	N1601
Voltage supply	KNX bus
Measuring range, temperature	0...50 °C
Sensing element, temperature	NTC
Communication	KNX PL-Link
Dimensions (W x H x D)	55 x 55 x 38 mm

Range overview QMX3..

Product Title	Stock no.	Product no.
Room unit for KNX PL-Link, freely configurable, flush-mounted with square bezel	S55624-H100	**QMX3.P36F**
Room unit for KNX PL-Link, freely configurable, flush-mounted with landscape bezel (3 modules landscape)	S55624-H101	**QMX3.P36G**

Basic plate for conduit and cavity wall box

QMX3.MP1

Basic plate for conduit box / cavity wall box with 68 mm diameter hole

20 pcs. per package

Data sheet	N1602
Dimensions (W x H x D)	80.5 x 115 mm
Warranty	60 Months

Stock no.	Product no.
S55624-H110	**QMX3.MP1**

3

QMX3..

Wall-mounted room sensors and operator units for KNX

The wall-mounted room unit QMX3.. consists of:
– Base plate
– Sensor or room operator unit

The following functions are (depending on type):
- Temperature sensor or multisensor (T, r.h., CO2)
- Backlit display or LED display
- Touchkeys
- Switching and control of lighting, blinds, scenes

Data sheet	N1602
Voltage supply	KNX bus
Measuring range, temperature	0...50 °C
Sensing element, temperature	NTC
Communication	KNX PL-Link KNX S-Mode
Degree of protection	IP30

QMX3.P02

Room operator unit KNX with temperature sensor, configurable touchkeys, LED display, white

Functions:
- Temperature sensor
- Configurable touchkeys with LED display
- Switching and control of lighting, blinds, scenes
- Window for labels

Data sheet	N1602
Dimensions (W x H x D)	88.4 x 133.4 x 18 mm

Stock no.	Product no.
S55624-H107	**QMX3.P02**

QMX3.P02-1BSC

Room operator unit KNX with temperature sensor, configurable touchkeys, LED display, black

Functions:
- Temperature sensor
- Configurable touchkeys with LED display
- Switching and control of lighting, blinds, scenes
- Window for labels

Data sheet	N1602
Dimensions (W x H x D)	88.4 x 133.4 x 18 mm

Stock no.	Product no.
S55624-H128	**QMX3.P02-1BSC**

Room sensor KNX for temperature, white

QMX3.P30

Functions:
- Temperature sensor

Data sheet	N1602
Dimensions (W x H x D)	88.4 x 133.4 x 18 mm

Stock no.	Product no.
S55624-H103	**QMX3.P30**

Room sensor KNX for temperature, black

QMX3.P30-1BSC

Functions:
- Temperature sensor

Data sheet	N1602
Dimensions (W x H x D)	88.4 x 133.4 x 18 mm

Stock no.	Product no.
S55624-H123	**QMX3.P30-1BSC**

Room operator unit KNX with temperature sensor, segmented backlit display, touchkeys, white

QMX3.P34

Functions:
- Temperature sensor
- Segmented backlit display and touchkeys

Data sheet	N1602
Dimensions (W x H x D)	88.4 x 133.4 x 18 mm

Stock no.	Product no.
S55624-H105	**QMX3.P34**

3

QMX3.P34-1BSC

Room operator unit KNX with temperature sensor, segmented backlit display, touchkeys, black

Functions:
- Temperature sensor
- Segmented backlit display and touchkeys

Data sheet	N1602
Dimensions (W x H x D)	88.4 x 133.4 x 18 mm

Stock no.	Product no.
S55624-H126	**QMX3.P34-1BSC**

QMX3.P37

Room operator unit KNX with temperature sensor, segmented backlit display, configurable touchkeys, LED display, white

Functions:
- Temperature sensor
- Segmented backlit display and touchkeys
- Configurable touchkeys with LED display
- Switching and control of lighting, blinds, scenes
- Window for labels

Data sheet	N1602
Dimensions (W x H x D)	88.4 x 133.4 x 18 mm

Stock no.	Product no.
S55624-H108	**QMX3.P37**

QMX3.P37-1BSC

Room operator unit KNX with temperature sensor, segmented backlit display, configurable touchkeys, LED display, black

Functions:
- Temperature sensor
- Segmented backlit display and touchkeys
- Configurable touchkeys with LED display
- Switching and control of lighting, blinds, scenes
- Window for labels

Data sheet	N1602
Dimensions (W x H x D)	88.4 x 133.4 x 18 mm

Stock no.	Product no.
S55624-H129	**QMX3.P37-1BSC**

Room sensor KNX for temperature and humidity, white

QMX3.P40

Functions:
- Multisensor for temperature and humidity

Data sheet	N1602
Dimensions (W x H x D)	88.4 x 133.4 x 18 mm

Stock no.	Product no.
S55624-H116	**QMX3.P40**

Room sensor KNX for temperature and humidity, black

QMX3.P40-1BSC

Functions:
- Multisensor for temperature and humidity

Data sheet	N1602
Dimensions (W x H x D)	88.4 x 133.4 x 18 mm

Stock no.	Product no.
S55624-H124	**QMX3.P40-1BSC**

Room operator unit KNX with sensors for temperature, humidity, segmented backlit display, touchkeys, white

QMX3.P44

Functions:
- multisensor for temperature and humidity
- Segmented backlit display and touchkeys

Data sheet	N1602
Dimensions (W x H x D)	88.4 x 133.4 x 18 mm

Stock no.	Product no.
S55624-H143	**QMX3.P44**

3

QMX3.P44-1BSC

Room operator unit KNX with sensors for temperature, humidity, segmented backlit display, touchkeys, black

Functions:
- Multisensor for temperature and humidity
- Segmented backlit display and touchkeys

Data sheet	N1602
Dimensions (W x H x D)	88.4 x 133.4 x 18 mm

Stock no.	Product no.
S55624-H144	**QMX3.P44-1BSC**

QMX3.P70

Room sensor KNX for temperature, humidity, CO2, white

Functions:
- Multisensor for temperature, humidity and CO2
- Air quality indicator with LED

Data sheet	N1602
Dimensions (W x H x D)	88.4 x 133.4 x 18 mm

Stock no.	Product no.
S55624-H104	**QMX3.P70**

QMX3.P70-1BSC

Room sensor KNX for temperature, humidity, CO2, black

Functions:
- multisensor for temperature, humidity and CO2
- Air quality indicator with LED

Data sheet	N1602
Dimensions (W x H x D)	88.4 x 133.4 x 18 mm

Stock no.	Product no.
S55624-H125	**QMX3.P70-1BSC**

Room operator unit KNX with sensors for temperature, humidity, CO2, segmented backlit display, touchkeys, white

QMX3.P74

Functions:
- multisensor for temperature, humidity and CO2
- Segmented backlit display and touchkeys

Data sheet	N1602
Dimensions (W x H x D)	88.4 x 133.4 x 18 mm

Stock no.	Product no.
S55624-H106	**QMX3.P74**

Room operator unit KNX with sensors for temperature, humidity, CO2, segmented backlit display, touchkeys, black

QMX3.P74-1BSC

Functions:
- Multisensor for temperature, humidity and CO2
- Segmented backlit display and touchkeys

Data sheet	N1602
Dimensions (W x H x D)	88.4 x 133.4 x 18 mm

Stock no.	Product no.
S55624-H127	**QMX3.P74-1BSC**

3

Room operator unit KNX with sensors for temperature, humidity, segmented backlit display, touchkeys, white

QMX3.P44

Functions:
- multisensor for temperature and humidity
- Segmented backlit display and touchkeys

Data sheet	N1602
Voltage supply	KNX bus
Measuring range	NTC: 0...50 °C Humidity: 10%...95 % r.F.
Measuring range, temperature	0...50 °C
Sensing element, temperature	NTC
Communication	KNX PL-Link KNX S-Mode
Color	White
Degree of protection	IP30
Dimensions (W x H x D)	88.4 x 133.4 x 18 mm
Weight (net)	0.21 kg
Warranty	24 Months

Stock no.	Product no.
S55624-H143	**QMX3.P44**

AQR253..

Front modules for base module

- Front module with sensors

Data sheet	N1411
Color	Titanium white
Degree of protection	IP30
Warranty	60 Months

Range overview AQR253..

Measuring range, temperature [°C]	Signal output temperature	Measurement range humidity [% r.h.]	Display	Dimensions (WxHxD) [mm]	Stock no.	Product no.
0...50	Active LG-Ni1000	0...100		55 x 55 x 12	S55720-S138	**AQR2534ANW**
				55 x 55 x 12	S55720-S137	**AQR2530NNW**
0...50	Active			55 x 55 x 12	S55720-S136	**AQR2532NNW**
0...50	Active	0...100		55 x 55 x 12	S55720-S141	**AQR2535NNW**
0...50	Active	0...100	CO_2 indicator by LED	55 x 55 x 38	S55720-S219	**AQR2535NNWQ**

The matching design frame must be ordered separately.

Base module with KNX for temperature and humidity measurement

AQR2570..

- Base module without sensor for plugging onto a front module
- 1 analog input to connect temperature sensors with NTC 10k sensing element to measure room, floor, or ceiling temperature
- 2 multifunctional binary inputs to connect window contacts or buttons
- Power supply via KNX bus, bus load < 5 mA

- Communication: KNX S-Mode, KNX LTE-Mode (Synco)

Data sheet	N1411
Voltage supply	KNX bus
Analog inputs, number	1
Analog inputs	Passive temperature sensor NTC 10k
Digital inputs, number	2
Digital inputs	Potential-free contacts
Warranty	60 Months

Range overview AQR2570..

Mechanical design	Stock no.	Product no.
EU (CEE/VDE)	S55720-S203	**AQR2570NF**
IT (3 Modular)	S55720-S205	**AQR2570NG**
UK (British Standard)	S55720-S204	**AQR2570NH**
US (UL)	S55720-S206	**AQR2570NJ**

Base modules with KNX for CO_2 measurement

AQR2576..

- Base module with maintenance and recalibration-free CO_2 sensor to plug onto a front module
- 1 analog input to connect temperature sensors with NTC 10k sensing element to measure room, floor, or ceiling temperature
- 2 multifunctional binary inputs to connect window contacts or buttons
- Power supply via KNX bus, bus load < 5 mA

- Communication: KNX S-Mode, KNX LTE-Mode (Synco)

Data sheet	N1411
Voltage supply	KNX bus
Measuring range	CO_2: 0...5000 ppm
Analog inputs, number	1
Analog inputs	Passive temperature sensor NTC 10k
Digital inputs, number	2
Digital inputs	Potential-free contacts
Warranty	60 Months

Range overview AQR2576..

Mechanical design	Dimensions (WxHxD) [mm]	Stock no.	Product no.
EU (CEE/VDE)	71 x 71 x 45	S55720-S207	**AQR2576NF**
IT (3 Modular)	71 x 71 x 45	S55720-S209	**AQR2576NG**
UK (British Standard)	71 x 71 x 45	S55720-S208	**AQR2576NH**
US (UL)	64 x 110 x 45	S55720-S210	**AQR2576NJ**

3

UP 258D..1

Presence Detector WIDE

- Passive infrared detector for ceiling installation
- Horizontal 360° motion detection area
- Presence/motion detection up to 64 m² / 400 m² (depending on mounting or room height)
- A 7-level setting to adjust the presence detection range
- Brightness and temperature measurement
- Integrated IR receiver and IR decoder for IR remote control with six pairs of buttons
- LED for display of detected motions in the delivery state for easy commissioning
- Programming button operable from the front
- Integrated bus coupler, bus connection via bus terminal, operation of electronics with bus voltage
- Mounting on the ceiling on a flush-mounting box with diameter of 60 mm, in a separately ordered housing for surface mounting or mounting plate for 4 x 4 boxes
- Color white (similar to RAL 9016)

UP 258D31

Presence Detector WIDE with temperature measurement

- Passive infrared detector for ceiling installation
- Horizontal 360° motion detection area
- Presence/motion detection up to 64 m² / 400 m² (depending on mounting or room height)
- A 7-level setting to adjust the presence detection range
- Brightness and temperature measurement
- Integrated IR receiver and IR decoder for IR remote control with six pairs of buttons
- LED for display of detected motions in the delivery state for easy commissioning
- Programming button operable from the front
- Integrated bus coupler, bus connection via bus terminal, operation of electronics with bus voltage
- Mounting on the ceiling on a flush-mounting box with diameter of 60 mm, in a separately ordered housing for surface mounting or mounting plate for 4 x 4 boxes
- Color white (similar to RAL 9016)

Data sheet	A6V11895382
Dimensions (W x H x D)	120 x 41 x 120 mm

Stock no.	Product no.
5WG1258-2DB31	**UP 258D31**

UP 258D33

Presence Detector WIDE black

- Passive infrared detector for ceiling installation
- Horizontal 360° motion detection area
- Presence/motion detection up to 64 m² / 400 m² (depending on mounting or room height)
- A 7-level setting to adjust the presence detection range
- Brightness and temperature measurement
- Integrated IR receiver and IR decoder for IR remote control with six pairs of buttons
- LED for display of detected motions in the delivery state for easy commissioning
- Programming button operable from the front
- Integrated bus coupler, bus connection via bus terminal, operation of electronics with bus voltage
- Mounting on the ceiling on a flush-mounting box with diameter of 60 mm, in a separately ordered housing for surface mounting or mounting plate for 4 x 4 boxes
- Color black (similar to RAL 9005)

Data sheet	A6V14046257
Color	Black
Dimensions (W x H x D)	120 x 120 x 41 mm

Stock no.	Product no.
5WG1258-2DB33	**UP 258D33**

New Product

Presence Detector WIDE pro with temperature and relative humidity measurement

UP 258D41

- Passive infrared detector for ceiling installation
- Horizontal 360° motion detection area
- Presence/motion detection up to 64 m² / 400 m² (depending on mounting or room height)
- A 7-level setting to adjust the presence detection range
- Brightness and temperature measurement
- Integrated IR receiver and IR decoder for IR remote control with six pairs of buttons
- LED for display of detected motions in the delivery state for easy commissioning
- Programming button operable from the front
- Integrated bus coupler, bus connection via bus terminal, operation of electronics with bus voltage
- Mounting on the ceiling on a flush-mounting box with diameter of 60 mm, in a separately ordered housing for surface mounting or mounting plate for 4 x 4 boxes
- Color white (similar to RAL 9016)

Data sheet	A6V11895382
Dimensions (W x H x D)	120 x 41 x 120 mm

Stock no.	Product no.
5WG1258-2DB41	**UP 258D41**

Presence Detector WIDE multi with temperature, humidity and CO2 measurement

UP 258D51

- Passive infrared detector for ceiling installation
- Horizontal 360° motion detection area
- Presence/motion detection up to 64 m² / 400 m² (depending on mounting or room height)
- A 7-level setting to adjust the presence detection range
- Brightness and temperature measurement
- Integrated IR receiver and IR decoder for IR remote control with six pairs of buttons
- LED for display of detected motions in the delivery state for easy commissioning
- Programming button operable from the front
- Integrated bus coupler, bus connection via bus terminal, operation of electronics with bus voltage
- Mounting on the ceiling on a flush-mounting box with diameter of 60 mm, in a separately ordered housing for surface mounting or mounting plate for 4 x 4 boxes
- Color white (similar to RAL 9016)

Data sheet	A6V11895382
Dimensions (W x H x D)	120 x 41 x 120 mm

Stock no.	Product no.
5WG1258-2DB51	**UP 258D51**

3

UP 258D61

Presence Detector WIDE DualTech with temperature measurement

- Ultrasound for reliable detection for ceiling installation indoors even behind objects
- Additional detection options through PIR technology
- Horizontal 360° motion detection area
- Presence/motion detection up to 28 m² / 79 m² (depending on mounting or room height)
- Brightness and temperature measurement
- Integrated IR receiver and IR decoder for IR remote control with six pairs of buttons
- LED for display of detected motions in the delivery state for easy commissioning
- Programming button operable from the front
- Integrated bus coupler, bus connection via bus terminal, operation of electronics with bus voltage
- Mounting on the ceiling on a flush-mounting box with diameter of 60 mm, in a separately ordered housing for surface mounting or mounting plate for 4 x 4 boxes
- Color white (similar to RAL 9016)

Data sheet	A6V11895378
Color	White
Dimensions (W x H x D)	120 x 41 x 120 mm

Stock no.	Product no.
5WG1258-2DB61	**UP 258D61**

UP 258D12

Presence Detector with brightness sensor

- Passive infrared detector for ceiling mounting indoors
- Adjustable sensitivity of detection
- Mixed light measurement
- Ceiling mounting on a flush-mounting box with 60 mm diameter and min. 40 mm depth or in a housing for surface-mounting AP 258E01 (to be ordered separately)
- Integrated IR decoder for S 255/11
- Programming button reachable from front
- Monitoring range horizontal 360°, vertical approx. 105°
- Monitoring motion of an area of diameter 8 m (depending on mounting/room height)
- Optional blinding of parts of the detection area
- Power supply via KNX bus
- Integrated bus coupling unit, bus connection via bus terminal

- Monitoring motion range horizontal 360°, vertical approx. 105°
- Optional blinding of parts of the detection area
- UP mounting with fixing claws in suspended ceiling
- Power supply via bus line
- Integrated bus coupling unit, bus connection via bus terminal

Data sheet	A6V10489482
Dimensions (W x H x D)	88 x 63 x 88 mm

Stock no.	Product no.
5WG1258-2DB12	**UP 258D12**

UP 255D21

Brightness Sensor with constant light level controller

- Mixed light measurement
- Ceiling mounting on a flush-mounting box with 60 mm diameter and min. 40 mm depth or in a housing for surface-mounting (to be ordered separately)
- Programming button reachable from front
- Integrated IR decoder for S 255/11

Data sheet	A6V10489482
Dimensions (W x H x D)	88 x 63 x 88 mm

Stock no.	Product no.
5WG1255-2DB21	**UP 255D21**

Accessories for presence detectors

Surface Mounting Box Type B

AP 258E11

- Mounting presence detector UP 258Dx1 as a surface-mounted device
- Color white (similar to RAL 9016)

Dimensions (W x H x D)	109 x 109 x 30 mm

Stock no.	Product no.
5WG1258-7EB11	**AP 258E11**

Mounting plate

S 258/12

- Mounting presence detector UP 258Dx1 with 4x4 boxes
- Color white (similar to RAL 9016)

Stock no.	Product no.
5WG1258-8AB12	**S 258/12**

3

G..B181.1E/KN

VAV compact controller KNX

- Compact controller with KNX communication for plants with variable or constant air volume flow
- Integrated, highly precise differential pressure sensor, damper actuator and digitally configurable air volume controller
- Nominal torque 5 or 10 Nm
- Air damper rotation angle mechanically adjustable between 0 and 90°
- Configurable as single device per room or for cascade control with pressure ratio 1:1, positive pressure, or negative pressure
- Prewired with a 0.9 m cable and a 0.9 m cable

Data sheet	N3547
Positioning time	150 s
Communication	KNX S-Mode KNX LTE-Mode KNX PL-Link
Cable length	0.9 m
Degree of protection	IP54
Dimensions (W x H x D)	71 x 158 x 61 mm
Warranty	60 Months

Range overview G..B181.1E/KN

Torque [Nm]	Operating voltage [V]	Air damper area [m²]	Power consumption	Stock no.	Product no.
5	AC 24	0.8	3 VA 2.5 W	S55499-D134	**GDB181.1E/KN**
5	AC 24	0.8	3 VA 2.5 W	S55499-D424	**GDB181.1GMKW 1**
5	AC 24	0.8	3 VA 2.5 W	S55499-D505	**GDB181.1EMKN**
10	AC 24	1.5	3 VA 2.5 W	S55499-D135	**GLB181.1E/KN**
10	AC 24	1.5	3 VA 2.5 W	S55499-D263	**GLB181.1EMKN**

GDB181.EMKN packaging unit 18 pieces.
Basic Documentation No.: P3547

Electromotoric rotary actuator KNX for control ball valves up to DN25

GDB111.9E/KN

Electromotoric rotary actuator
- for KNX S-Mode or KNX PL-Link communication
- for 2-/3-port control ball valves up to DN25
- for 6-port control ball valves up to DN25
- without spring-return
- pre-wired with two 0.9 m connection cables

Data sheet	A6V10725318
Torque	5 Nm
Angular rotation	90°
Power consumption	3 VA 2.5 W
Positioning time	150 s
Cable length	0.9 m
Communication	KNX S-Mode or KNX PL-Link
Positioning signal	KNX S-Mode or KNX PL-Link
Spring return function	No
Degree of protection	IP54
Medium temperature	5...90 °C
Ambient humidity, operation	95 % r.h.
Dimensions (W x H x D)	88 x 112 x 143 mm
Mounting position	Horizontal or vertical
Operating voltage	AC 24 V
Position feedback	None
Auxiliary switch	0
Warranty	60 Months

Stock no.	Product no.
S55499-D203	**GDB111.9E/KN**

Wireless and IoT

Overview and selection tools	202
Connect Box	210
Wireless room solution	214
IAQ multi-sensor	217

Wireless and IoT

Wireless and IoT solutions are a selection of systems and products that provide IoT game-changing technology to any building's space: increasing efficiency, connectivity and intelligence of your site.

IoT technology can make a difference
Wireless and IoT solutions allow you a faster integration into building systems through plug & play installation. You get less wiring and I/O requirements via wireless protocols, and you achieve more with less.

Wireless and IoT solutions are scalable and flexible, constantly adapting to your building´s usage and occupancy time. You are able to customize your system depending on your building in a simple way, without caring about any physical boundaries.

With wireless and IoT solutions, you can benefit from complete transparency on all measured variables in your building through intuitive UIs. Get constant connectivity and coordination between your building devices and systems. Leverage data more effecitvely across systems through our open solutions (to Siemens or 3rd parties).

Cybersecurity is always guaranteed through secure encrypted communication and firewall configurations to project-specific needs.

Siemens offers different IoT solutions depending on your needs. Have a look at our comprehensive solutions and devices displayed in the next pages and pick the right solution for you.

Highlights

- Plug & play installation
- Based on wireless protocols such as KNX IoT Thread and LoRaWAN
- Remote configuration on selected devices
- Intuitive UIs
- Compatible with Siemens or 3rd party systems

Connect Box

Connect Box enables you to manage small to medium-sized buildings in a smarter and simpler way. In a few clicks, it offers an IoT building management solution for your essential needs and connects all your devices, as well as enabling integration into your existing building automation system, building management system (BMS) or cloud application.

Simple, open and comprehensive IoT solution

Connect Box allows you to install and operate in a few clicks. Without engineering skills, you can install Connect Box and start to operate your building in just a few hours.

With Connect Box you can integrate your IoT and building devices. Connect all devices in your building, wired and IoT leveraging multiple industry standard protocols like LoRaWAN, BACnet, Modbus and many more.

Benefit from one interface for all your needs. Operate the essentials on your building with Connect Box. You can manage your simple daily tasks in one, cloud-based interface with no additional gateway or software.
siemens.com/connectbox

Highlights

- Quick and easy installation
- Library of over 500 field devices ready to connect (Siemens and 3rd party)
- Smart protocol gateway supports 11 communication protocols
- Intuitive web interface on desktop and smartphone
- Over-the-air updates
- Remote engineering, trend graphical view, alarms notification
- Integrated 4G SIM card & data plan for secure and configurable network access
- API management and documentation

All information at a glance – product features

With a single hardware, you can pick the right functionality for your needs with remotely deployed licenses.

Cloud license: The Cloud license allows you to remotely connect, monitor and operate the essentials of your small to medium-sized building. It entails an intuitive web interface with building management system essentials: monitoring, alarms notification and trend graphical view. Powerful integration with 3rd-party applications and API management is provided.

On-premise license: the On-premise license enables you to easily integrate your wired and IoT devices into your existing building automation system, BMS or cloud. For this license, the provided web interface allows remotely configurable on-site integration.

For more information visit the Product and Service Data Sheet (PSDS)
https://sid.siemens.com/v/u/A6V13605416

License type	Duration	Datapoint packages
Cloud	1 year 3 years 5 years	100 + optional add-ons 200 + optional add-ons 1.000 + optional add-ons
On-premise	One-time purchase, incl. 3 years remote configuration	100 250 1,000 5,000

Depending on the size of your building site, connectivity system and device protocols, different licenses can be selected:

Cloud license:					
Main features	**IoT**	**Small**	**Medium**	**Large**	**Satellite[1)]**
Alarms, schematics, graphs	■	■	■	■	■
IoT connectivity	■	■	■	■	■
Wired connectivity		Meters only	■	■	■
Local server: BACnet IP, Modbus TCP, MQTT	■	■	■	■	
Data points included (IN & OUT)	100	100	200	1,000	20
Max. data points via add-ons	200	200	400	10,000	50
Other features					
4G SIM card & data plan	■	■	■	■	■
Configuration wizard	■	■	■	■	■
Multi-site management	■	■	■	■	■
API access	■	■	■	■	■
IN protocols (client)					
LoRaWAN	■	■	■	■	■
BACnet			■	■	■
Modbus		■	■	■	■
M-bus		■	■	■	■
LON			■	■	■
LPB			■	■	■
KNX			■	■	■
Diematic			■	■	■

[1)] Only available in combination with a Medium or Large Cloud license. Allows specified functionality on another hardware in the same organization. The 50 DP add-on is available but limited to 30 additional data points.

On-premise license:

Main features	IoT	Small	Medium	Large	Satellite
Local server: BACnet IP, Modbus TCP, MQTT	■	■	■	■	■
IN data points included (OUT points unlimited)	100	100	250	1,000	5,000
Other features					
4G SIM card & data plan (configuration data only)	■	■	■	■	■
Configuration wizard	■	■	■	■	■
Multi-site management	■	■	■	■	■
IN protocols (client)					
LoRaWAN	■		■	■	■
BACnet		■	■	■	■
Modbus		■	■	■	■
M-bus		■	■	■	■
LON		■	■	■	■
LPB		■	■	■	■
KNX		■	■	■	■
Diematic		■	■	■	■

4

Selection and ordering data

Product No.	Stock No.	Description
CWG.BOX-EU	S55813-Y100	Connect Box Hardware for Europe
CWG.BOX-NA	S55813-Y100	Connect Box Hardware for North America
Cloud subscriptions		
CWG.L1-IOT	P55695-L100-A100	1 Year Cloud License “IoT” for Connect Box
CWG.L1-S	P55695-L100-A110	1 Year Cloud License “Small” for Connect Box
CWG.L1-M	P55695-L100-A120	1 Year Cloud License “Medium” for Connect Box
CWG.L1-L	P55695-L100-A130	1 Year Cloud License “Large” for Connect Box
CWG.L1-SAT	P55695-L100-A140	1 Year Cloud License “Satellite” for Connect Box
CWG.L1-ADD2	P55695-L100-A160	1 Year 50 Datapoint Add-on for “IoT”/“S”/“M” Connect Box
CWG.L1-ADD3	P55695-L100-A170	1 Year 1000 Datapoint Add-on for “L” Connect Box
CWG.L3-IOT	P55695-L100-A200	3 Year Cloud License “IoT” for Connect Box
CWG.L3-S	P55695-L100-A210	3 Year Cloud License “Small” for Connect Box
CWG.L3-M	P55695-L100-A220	3 Year Cloud License “Medium” for Connect Box
CWG.L3-L	P55695-L100-A230	3 Year Cloud License “Large” for Connect Box
CWG.L3-SAT	P55695-L100-A240	3 Year Cloud License “Satellite” for Connect Box
CWG.L3-ADD2	P55695-L100-A260	3 Year 50 Datapoint Add-on for “IoT”/“S”/“M” Connect Box
CWG.L3-ADD3	P55695-L100-A270	3 Year 1000 Datapoint Add-on for “L” Connect Box
CWG.L5-IOT	P55695-L100-A300	5 Year Cloud License “IoT” for Connect Box
CWG.L5-S	P55695-L100-A310	5 Year Cloud License “Small” for Connect Box
CWG.L5-M	P55695-L100-A320	5 Year Cloud License “Medium” for Connect Box
CWG.L5-L	P55695-L100-A330	5 Year Cloud License “Large” for Connect Box
CWG.L5-SAT	P55695-L100-A340	5 Year Cloud License “Satellite” for Connect Box
CWG.L5-ADD2	P55695-L100-A360	5 Year 50 Datapoint Add-on for “IoT”/“S”/“M” Connect Box
CWG.L5-ADD3	P55695-L100-A370	5 Year 1000 Datapoint Add-on for “L” Connect Box
On-premise licenses		
CWG.L6-IOT	P55695-L100-A400	Connect Box (on-premise) “IoT” License
CWG.L6-S	P55695-L100-A410	Connect Box (on-premise) “Small” License
CWG.L6-M	P55695-L100-A420	Connect Box (on-premise) “Medium” License
CWG.L6-L	P55695-L100-A430	Connect Box (on-premise) “Large” License
CWG.L6-XL	P55695-L100-A440	Connect Box (on-premise) “Xlarge” License
CWG.L6-R	P55695-L100-A450	Connect Box (on-premise) remote configuration renewal for 3 Years
CWG.L6-ADD1, upgrade from IoT / S to M	P55695-L100-A460	Connect Box (on-premise) upgrade
CWG.L6-ADD2, upgrade from M to L	P55695-L100-A470	Connect Box (on-premise) upgrade
CWG.L6-ADD3, upgrade from L to XL	P55695-L100-A480	Connect Box (on-premise) upgrade

Wireless room solution

Wireless room solution is a smooth and flexible system for commercial buildings, which allows to quickly collect your room information and integrate it into your automation system, BMS, cloud or 3rd party system.

The system is based on the innovative KNX IoT Thread wireless technology, enabling you to carry high amounts of data across your building in a fast reaction time.

Smooth connectivity, flexible integration.
Wireless room solution enables to integrate your building areas smoothly through battery powered devices with no extra wiring required and smooth integration into BACnet IP systems.

Different device variants enable you to select what you want depending on your needs. You can easily scale and change the location of your system depending on the use of your space.

The wireless system can be implemented in any commercial building space. From small to large sized sites, existing or new, fitting different building types (e.g. offices, education, hospitality).
siemens.com/wireless-room-solution

Highlights

- KNX IoT Thread wireless technology for fast and secure communication
- 3 sensors variants: T, T+r.H and T + r.H. + CO2
- Easy mounting (wall, flush, tape)
- No connectivity wiring required
- Connect up to 100 devices (with repeaters)
- Easy commissioning of wireless end devices and BACnet endpoints via web UI
- Self-healing network technology
- New, slim device design

All information at a glance – product features

Wireless room sensor

Thread mesh extender

KNX IoT to BACnet IP gateway

Technical data

- Battery type: 3* x 1.5 V AAA alkaline batteries (included)
- Configurable transmission rate
- Battery lifetime: up to 10 years**
- Wall, flush or tape mounting
- KNX IoT over Thread communication protocol

- USB-C via external power supply (AC 100...230 V)
- Self-healing thread mesh network technology
- External power supply with international socket adapters included
- KNX IoT over Thread communication protocol

- DC jack via external power supply (AC 100...230 V)
- 100 connected end devices per gateway
- 23 thread mesh extenders per gateway
- Wall or desk mounting
- KNX IoT over Thread wireless to BACnet IP communication protocol

Features and functions

- 3 different variants: T, T + r.h., and T + r.h. + CO^2 depending on your measuring needs
- High measurement accuracy
- Change of value (COV) functionality

- Amplifies sensor's signal
- Easy to install and commission
- Compact and unobtrusive design

- KNX IoT to BACnet IP conversion
- From wireless to Ethernet (BACnet IP) communication
- Easy commissioning of wireless end devices and BACnet endpointsvia web UI
- Open to Siemens and 3rd party building monitoring and automation systems

Selection and order data

Product	Variant	Product No.	Stock No.
Wireless room sensor	Temperature (T)	QAA2890/WI	S55720-S550
	Temperature, Rel. Humidity (T + r.H.)	QFA2890/WI	S55720-S551
	Temperature, Rel. Humidity, CO^2 (T + r.H. + CO^2)	QPA2892/WI	S55720-S552
KNX IoT to BACnet IP gateway		OCT200.KNBA	S55812-Y102
Thread mesh extender		OCT100.R	S55812-Y101

* 2 x 1.5 V AAA for the T + r.H. + CO^2 sensor variant
** up to 7 years for the T + r.H. + CO^2 sensor variant

IAQ multi-sensor

The IAQ multi-sensor is an indoor air quality sensor that measures 7 key environmental factors in your building's spaces, offering complete transparency and meeting building regulations (e.g. RESET). The system is based on the LoRaWAN wireless or BACnet technology, enabling you to choose the option that best fits your needs.

Make indoor air quality your priority
The IAQ multi-sensor provides a comprehensive air quality monitoring of your building by tracking: temperature, relative humidity, carbon dioxide, VOCs, PM2.5, light and noise.

Get a simple insight into your room conditions through an easy-to-read LED display showing the «air quality score» of your room and real-time individual values. Click one button to get the details of your environment.

The IAQ multi-sensor can be implemented in different building types, small to large, existing or new, by simply connecting via wireless or wired communication.

Monitor your building environment from remote with trend views and alarms by combining the IAQ multi-sensor with the Connect Box.
siemens.com/sensors

Highlights

- Measures 5 air and 2 ambient key factors
- Air quality score displays the quality of your room air at a glimpse
- RESET certified
- Easy mounting (wall, flush, tape)
- Dual beam CO^2 sensing and laser-based PM2.5 detection technology
- Perfect match to the Connect Box for simple remote monitoring solution
- Connects via LoRaWAN and BACnet protocols

All information at a glance – product features

The IAQ multi-sensor comes in 5 connectivity versions depending on your needs: BACnet IP, BACnet MSTP and LoRaWAN (EU, US, AUS).

Depending on your building type, three different mounting options are available: surface mount (no drilling in the wall), dry-wall mount or electrical box mount.

On BACnet IP/MSTP devices, you can access the configuration page via browser using the assigned IP address. On LoRaWAN devices, the configuration page can be accessed via the Connect Box console.

The IAQ multi-sensor presents different power options: USB Type C, Power over Ethernet (PoE) or low-voltage wiring.

Selection and ordering data

Product	Variant	Product No.	Stock No.	Details
BACnet	IP MSTP	QNA2700D.BA1 QNA2700D.BA2	S55720-S572 S55720-S573	2 Versions available, due to cables and protocols which are different
LoRaWan	Europe US Australia	QNA2820D.EU QNA2820D.US QNA2820D.AU	S55720-S574 S55720-S575 S55720-S576	3 Versions available, due to different LoRaWAN frequencies used in different regions

CWG.BOX-EU

Connect Box Hardware

The Connect Box is a simple, universal, and open IoT solution to connect and monitor small and medium-sized buildings.
Users can start within a day thanks to plug & play installation and the simple configuration and intuitive UI.
Improving energy efficiency, building comfort and reducing costs in existing buildings has never been that easy.

--> Library of over 500 field devices ready to connect
--> Smart converter of 11 communication protocols, both standard and proprietary, wired and radio
--> Default data retrieval at 10-minutes intervals (excluding IoT-sensors that have their own frequencies to minimize battery consumption). Commands (downlink) are sent instantly
--> Local or cloud connectivity via 4G IP, field bus
--> Over-the-air updates via 4G
--> Local IoT private network based on LoRa
--> Powerful integration up to 3rd party applications
--> Full-service, no networking skills required thanks to 4G cloud connectivity
--> BMS essentials included in user console on connectbox.siemens.com
--> Public API management and documentation

Operating voltage	DC 12...24 V
Max. cable length	1000 m
Connection cable	2-wire 0.35 mm²; Copper
Interfaces	Ethernet USB 1.1 USB 2.0 RS-485
Interface type	RS 485 Ethernet KNX-bus
Memory	512 MB RAM 4 GB Flash
Mounting	DIN rail Wall mounting with screws
Degree of protection	IP30-Vorderteile im DIN-Ausschnitt IP20-Terminalteil
Warranty	24 Months

Stock no.	Product no.
S55813-Y100	**CWG.BOX-EU**

Connect Box Hardware

CWG.BOX-NA

The Connect Box is a simple, universal, and open IoT solution to connect and monitor small and medium-sized buildings.
Users can start within a day thanks to plug & play installation and the simple configuration and intuitive UI.
Improving energy efficiency, building comfort and reducing costs in existing buildings has never been that easy.

--> Library of over 500 field devices ready to connect
--> Smart converter of 11 communication protocols, both standard and proprietary, wired and radio
--> Default data retrieval at 10-minutes intervals (excluding IoT-sensors that have their own frequencies to minimize battery consumption). Commands (downlink) are sent instantly
--> Local or cloud connectivity via 4G IP, field bus
--> Over-the-air updates via 4G
--> Local IoT private network based on LoRa
--> Powerful integration up to 3rd party applications
--> Full-service, no networking skills required thanks to 4G cloud connectivity
--> BMS essentials included in user console on connectbox.siemens.com
--> Public API management and documentation

Operating voltage	DC 12...24 V
Max. cable length	1000 m
Connection cable	2-wire 0.35 mm²; Copper
Interfaces	Ethernet USB 1.1 USB 2.0 RS-485
Interface type	RS 485 Ethernet KNX-bus
Memory	512 MB RAM 4 GB Flash
Mounting	DIN rail Wall mounting with screws
Degree of protection	IP30-Vorderteile im DIN-Ausschnitt IP20-Terminalteil
Warranty	24 Months

	Stock no.	Product no.
	S55813-Y110	**CWG.BOX-NA**

Connect Box License 1 Year

CWG.L1..

SIEMENS

1 Year License for Connect Box

Range overview CWG.L1..

Product Title	Stock no.	Product no.
Connect Box License 1 Year 50 DP	P55695-L100-A160	**CWG.L1-ADD2**
Connect Box License 1 Year 1000 DP	P55695-L100-A170	**CWG.L1-ADD3**
Connect Box License 1 Year IoT	P55695-L100-A100	**CWG.L1-IOT**
Connect Box License 1 Year L	P55695-L100-A130	**CWG.L1-L**

Range overview CWG.L1..

Product Title	Stock no.	Product no.
Connect Box License 1 Year M	P55695-L100-A120	**CWG.L1-M**
Connect Box License 1 Year S	P55695-L100-A110	**CWG.L1-S**
Connect Box License 1 Year Sat.	P55695-L100-A140	**CWG.L1-SAT**

CWG.L3..

SIEMENS

Connect Box License 3 Years

3 Years License for Connect Box

Range overview CWG.L3..

Product Title	Stock no.	Product no.
Connect Box License 3 Year 50 DP	P55695-L100-A260	**CWG.L3-ADD2**
Connect Box License 3 Year 1000 DP	P55695-L100-A270	**CWG.L3-ADD3**
Connect Box License 3 Year IoT	P55695-L100-A200	**CWG.L3-IOT**
Connect Box License 3 Year L	P55695-L100-A230	**CWG.L3-L**
Connect Box License 3 Year M	P55695-L100-A220	**CWG.L3-M**
Connect Box License 3 Year S	P55695-L100-A210	**CWG.L3-S**
Connect Box License 3 Year Sat.	P55695-L100-A240	**CWG.L3-SAT**

CWG.L5..

SIEMENS

Connect Box License 5 Years

5 Years License for Connect Box

Range overview CWG.L5..

Product Title	Stock no.	Product no.
Connect Box License 5 Year 50 DP	P55695-L100-A360	**CWG.L5-ADD2**
Connect Box License 5 Year 1000 DP	P55695-L100-A370	**CWG.L5-ADD3**
Connect Box License 5 Year IoT	P55695-L100-A300	**CWG.L5-IOT**
Connect Box License 5 Year L	P55695-L100-A330	**CWG.L5-L**
Connect Box License 5 Year M	P55695-L100-A320	**CWG.L5-M**
Connect Box License 5 Year S	P55695-L100-A310	**CWG.L5-S**
Connect Box License 5 Year Sat.	P55695-L100-A340	**CWG.L5-SAT**

CWG.L6..

SIEMENS

Connect Box License (on-premise)

Connect Box (on-premise) License

Range overview CWG.L6..

Product Title	Stock no.	Product no.
Connect Box (on-premise) License - Upgrade from IoT or Small to Medium	P55695-L100-A460	**CWG.L6-ADD1**
Connect Box (on-premise) License Upgrade from Medium to Large	P55695-L100-A470	**CWG.L6-ADD2**
Connect Box (on-premise) License Upgrade from Large to XLarge	P55695-L100-A480	**CWG.L6-ADD3**
Connect Box License (on-premise) IoT	P55695-L100-A400	**CWG.L6-IOT**
Connect Box License (on-premise) L	P55695-L100-A430	**CWG.L6-L**
Connect Box License (on-premise) M	P55695-L100-A420	**CWG.L6-M**
Connect Box License (on-premise) renew	P55695-L100-A450	**CWG.L6-R**
Connect Box License (on-premise) S	P55695-L100-A410	**CWG.L6-S**
Connect Box License (on-premise) XL	P55695-L100-A440	**CWG.L6-XL**

OCT100.R

Thread mesh extender

The Thread mesh extender provides IoT connectivity and enables communication via Thread.
- Compatible with all Siemens KNX IoT / Thread devices
- Extends the wireless range by bridging from wireless thread communication to wireless thread communication (also called repeater functionality)
- Reliable network operation with mesh network functionality
- Mains powered by external power supply adapter (AC 100...240 V)
- Clear status indication with integrated LEDs
- Dimensions: 92 x 26 x 77 mm

Operating voltage	100...240 V
Frequency	50/60 Hz
Ambient temperature, operation	0...+40 °C
Ambient temperature, storage	-30...+70 °C
Color	White
Dimensions (W x H x D)	92 x 26 x 77 mm
Warranty	24 Months

Stock no.	Product no.
S55812-Y101	OCT100.R

OCT200.KNBA

KNX IoT to BACnet IP gateway

KNX IoT to BACnet IP gateway
- Gateway between KNX IoT devices and BACnet IP devices/systems
- Integrated wireless communication via KNX IoT over Thread
- BACnet IP communication via integarted Ethernet port
- Easy commissioning and configuration of KNX IoT devices and BACnet IP communication via integrated Web UI
- Mains powered by external power supply adapter (AC 100...240V)
- Clear status indication with integrated LEDs
- Dimensions: 117 x 117 x 43 mm

Data sheet	A6V13434938
Operating voltage	AC 100...240 V
Power consumption	Max. 12 W
Ambient temperature, operation	0...50 °C
Ambient humidity, operation	5...95 % r.h.
Ambient temperature, storage	-25...+70 °C
Degree of protection	IP30
Weight (net)	0.187 kg
Color	White
Dimensions (W x H x D)	117.47 x 117.47 x 42.68 mm
Warranty	24 Months

Stock no.	Product no.
S55812-Y102	OCT200.KNBA

Wireless room sensor, KNX IoT/Thread, Temperature

QAA2890/WI

Wireless room sensor for temperature
- Wirless communication via KNX IoT over Thread
- Measurement accuracy up to ± 0.3 °C
- More than 10 years battery lifetime (under normal operating conditions)
- Dimensions: 88 x 88 x 14 mm

Data sheet	A6V12871702
Battery life	Up to 10 years (under normal operating conditions with 10 minutes wake-up cycle)
Power consumption	Max. 20 mA
Measuring range, temperature	0...50 °C
Time constant	Temperature: ≤ 8.5 min (depending on air movement and thermal coupling to the wall)
Measurement accuracy	Temperature at 21...25 °C: ±0.3 K Temperature at 15...21 °C/25...35 °C: ±0.7 K Temperature at 0...15 °C/35...50 °C: ±1 K
Communication	2400...2483.5 MHz
Indoor wireless range	50 m
Display	no display
Color	White
Degree of protection	IP30
Dimensions (W x H x D)	88 x 88 x 14 mm
Warranty	60 Months

Stock no.	Product no.
S55720-S550	QAA2890/WI

Wireless room sensor, KNX IoT/Thread, Temperature & Humidity

QFA2890/WI

Wireless room sensor for temperature & humidity
- Wirless communication via KNX IoT over Thread
- Measurement accuracy up to ± 0.3 °C & ± 2 % r.h.
- More than 10 years battery lifetime (under normal operating conditions)
- Dimensions: 88 x 88 x 14 mm

Data sheet	A6V12871702
Battery life	Up to 10 years (under normal operating conditions with 10 minutes wake-up cycle)
Power consumption	Max. 20 mA
Measuring range, temperature	0...50 °C
Time constant	Rel. humidity: 20 s (depending on air flow) Temperature: ≤ 8.5 min (depending on air flow and thermal coupling to the wall)
Measurement accuracy	Rel. humidity at 30...70 % r.h.: ±2 % r.h. Rel. humidity at 0...30 % r.h./70...100 % r.h.: ±5 % r.h. Temperature at 21...25 °C: ±0.3 K Temperature at 15...21 °C/25...35 °C: ±0.7 K Temperature at 0...15 °C/35...50 °C: ±1 K
Communication	2400...2483.5 MHz
Indoor wireless range	50 m
Display	no display
Color	White
Degree of protection	IP30
Dimensions (W x H x D)	88 x 88 x 14 mm
Warranty	60 Months

Stock no.	Product no.
S55720-S551	QFA2890/WI

New Product

QPA2892/WI

Wireless room sensor, KNX IoT/Thread, Temperature, Humidity & CO2

Wireless room sensor for temperature, humidity and CO2
- Wirless communication via KNX IoT over Thread
- Measurement accuracy up to ± 0.3 °C, ± 2 % r.h. & ± 50 ppm CO2
- More than 7 years battery lifetime (under normal operating conditions)
- Dimensions: 88 x 88 x 18 mm

Data sheet	A6V12871702
Battery life	Up to 7 years (under normal operating conditions with 10 minutes wake-up cycle)
Power consumption	Max. 20 mA
Measuring range, temperature	0...50 °C
Time constant	Rel. humidity: 20 s (depending on air flow) Temperature: ≤ 8.5 min (depending on air flow and thermal coupling to the wall) CO2: ≤ 5 min (depending on air flow)
Measurement accuracy	Rel. humidity at 30...70 % r.h.: ±2 % r.h. Rel. humidity at 0...30 % r.h./70...100 % r.h.: ±5 % r.h. Temperature at 21...25 °C: ±0.3 K Temperature at 15...21 °C/25...35 °C: ±0.7 K Temperature at 0...15 °C/35...50 °C: ±1 K CO2 at 0...2000 ppm: ±2 % m.v. / ±50 ppm
Communication	2400...2483.5 MHz
Indoor wireless range	50 m
Display	no display
Color	White
Degree of protection	IP30
Dimensions (W x H x D)	88 x 88 x 18 mm
Warranty	60 Months

Stock no.	Product no.
S55720-S552	QPA2892/WI

New Product

Indoor Air Quality Multi-Sensor

QNA...

Indoor Air Quality multi-sensor
- A 7in1 sensor acquires value of temperature, r.H., CO2, VOC, particle matter as well as sound pressure and illuminance as complementary info.
- It is compliant with WELL, LEAD building certification in term of people's wellbeing. One typical use case is to monitor the indoor air quality status in WELL certified buildings.
- Available with (depending on the variant chosen),
BACnet IP
BACnet MSTP
LoRaWAN for EU/US/AU

Measuring range, temperature	0...90 °C
Measurement range humidity	0...100 % r.h.
Measuring range	400...5000 ppm CO_2
Measurement accuracy	±3 % r.h.±3 % r.h.
Ambient temperature, operation	-5...+40 °C
Display	LED
Communication	BACnet IP, BACnet MSTP, LoRaWAN

4

Range overview QNA...

Product Title	Dimensions (WxHxD) [mm]	Stock no.	Product no.
IAQ multi-sensor BACnet IP, RESET Certified	98 x 98 x 34	S55720-S572	QNA2700D.BA1
IAQ multi-sensor BACnet MSTP, RESET Certified	98 x 98 x 34	S55720-S573	QNA2700D.BA2
IAQ multi-sensor LoRaWAN AU, RESET Certified	98 x 98 x 34	S55720-S576	QNA2820D.AU
IAQ multi-sensor LoRaWAN EU, RESET Certified	98 x 98 x 34	S55720-S574	QNA2820D.EU
IAQ multi-sensor LoRaWAN US, RESET Certified	98 x 98 x 34	S55720-S575	QNA2820D.US

New Product

Home automation system

5

Overview and selection tools		220
Synco™ living	Door/window contact AP 260	222
Connected Home		223

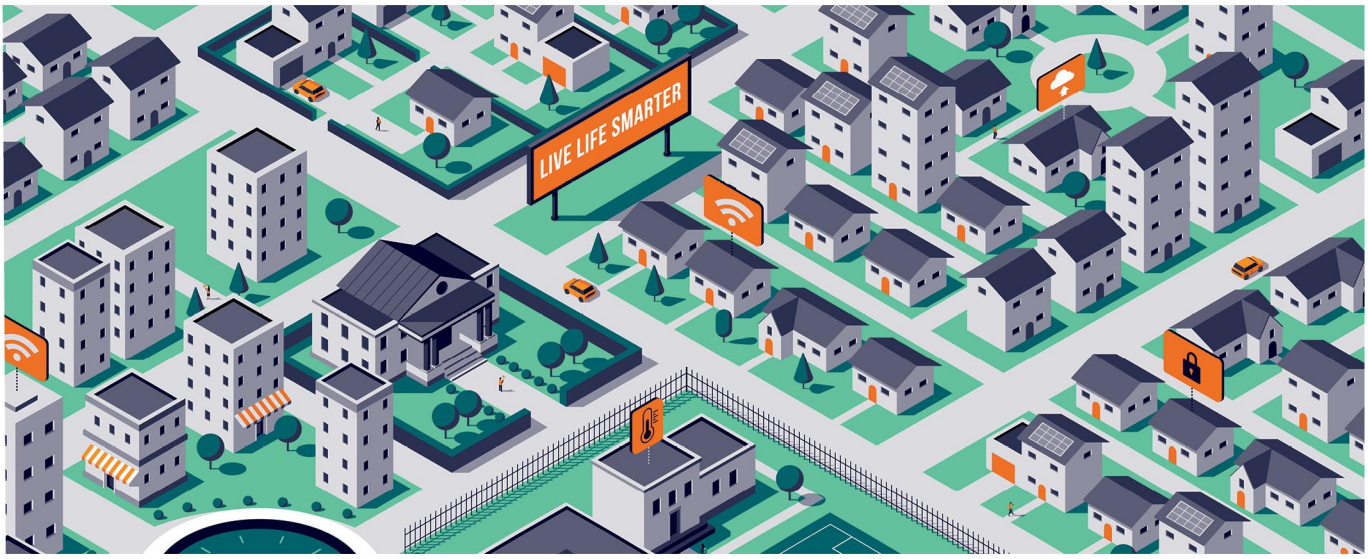

LIVE LIFE SMARTER

Connected Home

Connected Home is an easy to integrate, combine and install home ecosystem. Its future-proof technology reduces costs, provides energy savings and requires very little customer support.

Technology with purpose

Our Connected Home ecosystem combines comfort with energy savings. It's one in a long line of Siemens products designed to make life easier, while also contributing to a greener, more sustainable future.

The ecosystem is based on Zigbee 3.0, making it versatile, and easy to integrate and install. Installation is done wirelessly through hub pairing in just a few seconds and it allows for up to 40 IoT devices per hub. For comfort and convenience, everything is controlled at the touch of a button through our sleek, user-friendly app.

Siemens' Connected Home ecosystem makes homes smarter today and will continue to do so tomorrow. It is future proof – able to adapt and connect with more intelligent devices as each home ecosystem expands. This means the technology doesn't just contribute to lower, more sustainable energy consumption; it's itself sustainable and makes homes smarter and lives greener.
siemens.com/connectedhome

Highlights

- Zigbee 3.0 for reliable and secure communication
- Wireless installation saves time and effort
- Fast hub pairing within three clicks
- Connects up to 40 devices
- Keeps working even if internet connection drops
- Full flexibility with separate heating controls for each room
- Optimized energy consumption saves energy and money
- Smartphone app enables a simple and cutomizable home automation

All information at a glance – Product features

	Technical Data	Features and functions
Thermostat	• Battery type: 2xAA (included) • Battery lifetime: up to 1 year • Wired and wireless version • 1x On/Off voltage free relay • Relay switch capacity: max.5 (2) A • Wall mount or free standing with table stand • Zigbee 3.0 communication protocol	• Room temperature control with either TPI or 2-position • User interface to change setpoint and mode • Limitation of the minimum/maximum setpoint setting • Open window detection • Valve exercising to prevent seizing • Frost protection • Remote firmware update
Radiator valve actuator	• Battery type: 2xAA (included) • Battery lifetime: up to two years • Fits to M30 x 1.5 valves • RA, RAL, RAVL adapters (included) • Zigbee 3.0 communication protocol	• Auto adaption to valve • Local temperature control loop • User interface to change set point • Window open function • Boost mode • Easy pairing • Child safety lock
Receiver	• AC 230 V mains powered • 2x On/Off voltage free relays • Relay switch capacity: max. 8 (2) A • Wall mounting plate • Zigbee 3.0 communication protocol	• Boiler and domestic hot water control • Zigbee network repeater • Remote firmware update • Domestic hot water scheduling • Boiler release based on heat demand from individual zones • Easy pairing • Manual overwrite of relay output
Hub	• AC 230 V mains powered (via adapter) • On desk device design • LED status indicator • Ethernet and WLAN internet access • Zigbee 3.0 communication protocol	• Up to 32 battery powered devices • Up to 40 devices in total • Remote firmware update • Restart and binding button • Compact design • Easy pairing • No internet continuous operation
Smartphone app	• Compatible with iOS and Android • Compatible with major phone brands • Continuous updates and improvements • High contrast design • Available in multiple languages	• Room scheduling • Individual room control (zoning) • Temperature history • Scene and automation • Messaging and push notifications • Multi-user and multi-home control • Room picture customization

Selection and order data

Product name	Article type	Order no.	PE (ST, SZ, M)	PKG/VPE	PG	Price (€)
Connected Home Hub	GTW100ZB	S55772-T109				
Connected Home Receiver	RCR110.2ZB	S55772-T110				
Connected Home Radiator valve actuator	SSA911.02ZB	S55181-A105				
Connected Home thermostat wired	RDZ100ZB	S55772-T113				
Connected Home thermostat wireless	RDZ101ZB	S55772-T114				

AP 260/11

Door/window contact with battery, titanium white

- For detecting the state (closed/open) of a door or window via the reed contact integrated in the device, with actuation of the reed contact through the supplied magnet for attachment to the moving part of the door or window
- Connection for an external floating contact
- 4 plug-in terminals for wire cross-sections (solid or finely stranded) of 0.14...0.5 mm2 for connection of the external contact and to allow setting via a wire jumper, whether monitoring is to cover internal contact only, external contact only, or both contacts
- KNX-RF transmitter for 868.3 MHz
- Electronics powered by a lithium battery (1/2 AA 3.6 V), with a battery service life of approx. 5 years, with signaling of battery status every 24 hours, and with an LED that flashes every 10 seconds to indicate that the battery needs replacing
- Commissioning using a pushbutton located on the front of the sensor – no additional aids required
- Surface mounting
- Comprising one mounting plate for screw or adhesive fastening, clip-on radio sensor with integrated reed contact and trigger solenoid. Battery included in delivery.

Data sheet	A6V10416211

Stock no.	Product no.
5WG3260-3AB11	**AP 260/11**

5

Adapter plate ARG101

ARG101

Italian adapter plate for RDZ100ZB and RDZ101ZB thermostats

Data sheet	N3009
Dimensions (W x H x D)	115 x 88 x 6.85 mm
Warranty	24 Months

Stock no.	Product no.
S55772-T112	ARG101

GTW100ZB Connected Home Hub

GTW100ZB

This product is the central device for the Siemens Connected Home portfolio.
- Mains-powered hub AC 230 V (with external power adapter SA68-050100V included)
- Wireless communication based on Zigbee 3.0
- Support of Ethernet and WLAN connection
- Bridge between Internet and Zigbee networks
- Easy binding with mobile application "Connected Home" (downloadable from Google Play™ or Apple App Store®)
- LED indication of power and network connection state

Data sheet	A6V12640776
Operating voltage	DC 5 V
Communication	Zigbee
Degree of protection	IP30
Dimensions (W x H x D)	92 x 92.3 x 37.2 mm
Warranty	24 Months

Stock no.	Product no.
S55772-T109	**GTW100ZB**

RCR110.2ZB Connected Home Receiver

RCR110.2ZB

This product allows Siemens Connected Home users to control their boiler, domestic hot water or any valve/pumps related to HVAC system.
- Mains-powered receiver AC 230 V
- Communicates with Connected Home Hub via Zigbee network
- Two voltage-free contacts for boiler/pump release or DHW switch
- LED indication of operating state
- Manual override of relay outputs
- Firmware upgrade over the air via Zigbee

Data sheet	A6V12680327
Degree of protection	IP30
Dimensions (W x H x D)	84 x 103 x 28.5 mm
Warranty	24 Months

Stock no.	Product no.
S55772-T110	**RCR110.2ZB**

RDZ100ZB

Zigbee Room Thermostat RDZ100ZB

The room thermostat RDZ100ZB is part of Siemens Connected Home ecosystem.
It is used to control the room temperature in heating systems.

Features and functions:
- Room temperature control
- Communicates with Connected Home Hub via Zigbee network
- 2-position/TPI control with On/Off output for heating
  - With built-in relay
- Open window detection
- Frost protection
- Time schedule via mobile application "Connected Home" (downloadable from Google Play™ or Apple App Store®)
- Adjustable commissioning and control parameters via the mobile application
- Battery-powered (2x AA batteries)

Data sheet	A6V13360592
Operating voltage	DC 3 V
Battery life	< 1 year
Setpoint setting range	5...35 °C
Sensing element	Resistance sensor
Communication	With connected Home Hub via Zigbee network
Relay outputs	Change-over contact Potential-free
Relay output, switching current	5 (2) A
Switching voltage	AC 24...230 V
Switching current	Lx - L1 Maximum 5 (2) A Lx - L2 Maximum 5 (2) A
Design	Room sensor
Radio frequency	2.4...2.4835 GHz MHz
Type of fixing	Wall mounting with screws
Degree of protection	IP30
Dimensions (W x H x D)	88 x 88 x 20.5 mm
Color	White
Warranty	24 Months

Stock no.	Product no.
S55772-T113	RDZ100ZB

5

New Product

Zigbee Room Thermostat RDZ101ZB

RDZ101ZB

The RDZ101ZB is part of Siemens Connected Home ecosystem. It is used to control the room temperature in heating systems.

- Room temperature control
- Communicates with Connected Home Hub via Zigbee network
- 2-position/TPI control with On/Off output for heating
- With wireless output module
- Open window detection
- Frost protection
- Time schedule via mobile application "Connected Home" (downloadable from Google Play™ or Apple App Store®)
- Adjustable commissioning and control parameters via the mobile application
- Battery-powered (2xAA batteries)

Data sheet	A6V13360592
Operating voltage	DC 3 V
Battery life	< 1 year
Setpoint setting range	5...35 °C
Sensing element	Resistance sensor
Communication	With connected Home Hub via Zigbee network
Relay outputs	Change-over contact Potential-free
Switching voltage	AC 24...230 V
Design	Room sensor
Radio frequency	2.4...2.4835 GHz MHz
Type of fixing	Wall mounting with screws
Degree of protection	IP30
Dimensions (W x H x D)	88 x 88 x 20.5 mm
Color	White
Warranty	24 Months

Stock no.	Product no.
S55772-T114	RDZ101ZB

Connected Home wireless room actuator, ZigBee

SSA911.02ZB

Battery-powered radiator valve actuator

- Communication with Siemens Connected Home
- ZigBee wireless protocol
- Display with user interface
- Integrated temperature sensor
- Local temperature control algorithm
- 2x AA alkaline batteries
- M30 x 1.5 valve connection

Data sheet	A6V12789814
Positioning force	90 N
Stroke	5 mm
Communication	Zigbee
Degree of protection	IP20
Medium temperature	20...70 °C
Ambient humidity, operation	65 % r.h.
Dimensions (W x H x D)	62 x 67 x 81 mm
Operating voltage	3.0 V
Warranty	60 Months

Stock no.	Product no.
S55181-A105	SSA911.02ZB

New Product

Thermostats

Overview and selection tools		228
Communicating room thermostats	Fan coils – KNX	233
	Fan coils - Modbus	242
	Fan coils - BACnet	244
	Variable air volumes (VAV) – KNX	245
	Heating - KNX	246
	Conventional and heat pump - BACnet	247
	IAQ control - KNX / Modbus	248
	Room unit – KNX	250
	Accessories	251
Standalone room thermostats	Heating and/or cooling	253
	Fan coils	270
	Variable air volumes (VAV)	287
	Conventional and heat pump	291
	Accessories	292
Capillary and clamp-on thermostats	Temperature	294
	Frost protection units	302
	Coiled probe thermostats	308

Room thermostats

Siemens is a leading supplier of room temperature controllers for a wide range of heating, ventilation and cooling applications in residential buildings, hotels, office and commercial buildings.

Siemens solutions meet every budget: Basic electromechanical on/off units, RF-based or with infrared remote control, as well as thermostats with modulating outputs. Programmable thermostats with 24-hour or 7-day programs and non-programmable room temperature thermostats are available as analog or digital products with displays.

Quality, reliability, outstanding functionality, ease of installation and use: Our room controls satisfy your needs. The unique and acclaimed Siemens design is an additional stylish feature.

Proudly made around the world.

- Quality really is the issue
- Product lifecycles and environment in partnership
- Standards are not negotiable

Heating / Cooling applications

	Basic		With display					With time switch				
Type	RAA	RCU1.	RDD	RDD flush mount	RDF3xx RDF6xx	RDH	RDF8../ RDD8..	RDE	RDE 410/EH	RDG	RDJ	REV
Housing												
Setpoint knob	□	■				✪				■	✪	
Setpoint buttons			■	■	■			■	■			■
LED indicators	□											
Digital display			✪	✪	■	■	■	■	■	■	■	■
Programming slider											■	✪
Touch screen							✪					
Wiring												
Mains-independent	✪											
Battery-powered			□					□			■	■
Mains-powered	□	■	□	■	■	*	■	□	■	□	*	*
Radio frequency transmission			□			□		□			□	□
Modulating heating valve control										□		□
Multifunctional input					□		■	□		■		
Remote control input												✪
Analog output										□		
Relay output	■	■	■	■	■	■	■	■	■	□	✪	■
Functionalities												
Heating plants	■	■	■	■	■	■	■	■	■	■	■	■
Cooling plants	■	■			✪		✪			■		□
Domestic hot water control			□					□				
Humidity control										✪		
Air quality monitoring							✪			✪		
Air quality monitoring/control										✪		
Green leaf										✪		
Remote operation (mobile app)												
Commissioning mobile app										✪		
Time switch – Daily									■		■	□
Time switch – Weekly					✪			✪	■	□		□
Operating mode – Comf. mode	■	■	■	■	■	■	■	■	■	■	■	■
Operating mode – Eco mode		■	■	■	■		■	■	■	■	■	■
Operating mode – Standby.		■		■	■		■	■	■	■		
Operating mode – Frost protect.			■	■	■		■	■	■	■	■	■
Operating mode – Holidays								■				□
Control loop	2-point	2-point/ PI	2-point	2-point	2-point/PI	2-point/ PID	2-point/ PI	2-point/ PID	2-point	2-point/ PI	2-point/PID	2-point/PID or PI
Communication					□ KNX □ Mobus		□ KNX			□ KNX		

■ Valid for all variants □ Depending on variants ✪ Main feature * Radio frequency receiver only

Fan-coils application

	Basic		With display					With time switch	
Type	**RAB**	**RCC**	**RDG1xx RDG2xx**	**RDF3xx RDF6xx**	**RDF5...**	**RDF8xx**	**RDB160BN**	**RDG2xxT RDG2xxKN**	**RDF6xxT**
Housing									
Setpoint knob	□	■	■					■	
Setpoint buttons				■	■		■		■
LED indicators	□	✪							
Digital display			✪	■	■	■	■	■	■
Auto fan speed			■	■	■	■	■	■	■
Flush mounting				✪	✪	■			✪
Touch screen						✪			
Wiring									
Mains-independent	✪								
Mains-powered		■	□	□	■	■		□	■
Multifunctional input			■	□		■	■	■	■
Sensor input		■	■	□		■	■	■	■
Changeover input		□	■	□		■	■	■	■
Analog output			□	□			■	□	
Relay output (on/off)	■	■	□	□	■	■		□	■
Triac 2-p/3-p/PWM			□				■	□	
DC-fan			□	□			■	□	□
Functionalities									
2-pipe-system	□	□	■	■	□	■	■	■	■
4-pipe-system	□	□	■	□	□	■	■	■	■
Electric heater		□	□	□		■	■	■	■
Radiator			■			■		■	
Humidity control			✪					✪	
Air quality monitoring/control			✪					✪	
Green leaf			✪					✪	
Manager/Subordinate (M/S)			□					□	
Delta Temp. Control			□					□	
Commissioning mobile app			✪					✪	
Time switch weekly			✪					✪	✪
Operating mode Comfort	■	■	■	■	■	■	■	■	■
Operating mode Economy		■	■	■		■	■	■	■
Operating mode Standby/Prot.	□	■	■	■	■	■	Mold Prot.	■	■
Operating mode Frost protect.		■	■	■		■		■	■
Control loop	2-point	2-point	2-point/PI	2-point/PI	2-point	2-point/PI	2-point/PI	2-point/PI	2-point/PI
Infrared remote control				□					□
Communication			□ KNX	□ KNX, Modbus		□ KNX	BACnet MS/TP	□ KNX	

■ Valid for all variants □ Depending on variants ✪ Main feature

6

Heat Pumps applications

	With display			With time switch	
Type	**RDG110**	**RDF3xx/ RDF8xx**	**RDF6xx**	**RDF6xxT**	**RDG26xx**
Housing					
Digital display	■	■	■	■	■
Fan speed command	- / 1 / 3 / DC	1 / 3	1 / 3 / DC	1 / 3 / DC	- / 1 / 3 / DC
Wiring					
Mains-powered	■	■	■	■	■
Sensor input	■	■	■	■	■
Relay output	■	■	■	■	■
Functionalities					
Electric heater	■	■	■	■	■
DX compressor	■	□	□	□	■
Manual Heat / Cool changeover	■	■	■	■	■
Weekly time clock				■	■
Operating mode – Comf. mode	■	■	■	■	■
Operating mode – Eco mode	■	■	■	■	■
Operating mode – Standby.	■	■	■	■	■
Operating mode – Frost protect.	■	■	■	■	■
Control loop	2-point	2-point	2-point	2-point	2-point
Green leaf					✪
Manager/Subordinate (M/S)					■
Delta Temp. Control					■
Commissioning mobile app					✪
Communication		□ KNX, Modbus	□ KNX, Modbus		□ KNX

■ Valid for all variants □ Depending on variants ✪ Main feature

VAV applications

	Basic	With display	
Type	**RCU50.2**	**RDU340**	**RDG40..**
Housing			
Setpoint knob	■		■
Setpoint buttons		■	
Digital display		■	■
Flush mounting		■	
Wiring			
AC 24 V powered	■	■	■
Sensor input		■	■
Changeover input		■	■
Analog output	■	■	■
Relay output		■	
Functionalities			
Indoor air quality			□
Manual Heat / Cool changeover	■	■	■
V min Cooling		■	■
Operating mode – Comf. mode	■	■	■
Operating mode – Eco mode		■	■
Operating mode – Standby/Prot.		■	■
Operating mode – Frost protect.		■	■
Control loop	P	P/PI	P/PI
Communication			□ KNX

■ Valid for all variants □ Depending on variants

Overview capillary thermostats / frost protection thermostats

Typ	Dat a sheet	Function: Control thermostat (TR)	Function: Thermal reset limit thermostat (TW)	Function: Limit thermostat (TB)	Function: Safety limit thermostat (STB)	Setting range: TR /TW: Set point [°C] TB / STB: Setpoint cut-out temperature [°C]	Capillary length [mm]	Switching cap. AC 24...250 V: Amps.	Approvals: CE (73/23/EEC, 89/336/EEC, EN60730)	Approvals: ENEC (European Norms Elec. Certif.)	Approvals: PED (Pressure Equipment Directive)	Approvals: EN14597 (old approval: DIN3440)	Approvals: C-Tick	IP: Degree of protection (IP)	Set: Pocket ALT-SB100 / ALT-DB100J (length mm)	Set: Clamping band for piping up to Ø 100 mm	Sensor element / mounting: Remote line – Sensor with capillary line	Sensor element / mounting: Surface thermostat – Sensor attached to housing	Sensor element / mounting: Ductwork – The entire capillary as sensor (at least 30 cm for detection)	Sensor element / mounting: Immersion – immersion sensor	Sensor element / mounting: Room thermostat – Helix sensor	Applications [4]: Temperature control	Applications [4]: Temperature limitation	Applications [4]: Frost protection	Applications [4]: Air conditioning	Applications [4]: Heating boilers	Applications [4]: Domestic hot water heating / heat exchanger	Applications [4]: Floor heating
RAK-ST.010FP-M	N1204				■	95	700	16 (2.5)/2 (0.4)	■	■	■	■	■	43	100		■	■		■			■			■		
RAK-ST.020FP-M	N1204				■	100	700	16 (2.5)/2 (0.4)	■	■	■	■	■	43	100		■	■		■			■			■		
RAK-ST.030FP-M	N1204				■	110	700	16 (2.5)/2 (0.4)	■	■	■	■	■	43	100		■	■		■			■			■		
RAK-ST.1430S-M	N1204				■	80...100	1600	16 (2.5)/2 (0.4)	■	■	■	■	■	43		■	■	■		■			■			■		
RAK-ST.1310P-M	N1204				■	90...110	700	16 (2.5)/2 (0.4)	■	■	■	■	■	43	100		■	■		■			■			■		
RAK-ST.1300P-M	N1204				■	110...130	700	16 (2.5)/2 (0.4)	■	■	■	■	■	43	100		■	■		■			■			■		
RAK-ST.1600MP	N1204				■	95...130	700	16 (2.5)/2 (0.4)	■		■	■		54	100		■	■		■			■			■		
RAK-ST.1385M	N1204				■	40...70	700	16 (2.5)/2 (0.4)	■		■	■		54			■	■		■			■			■		
RAK-TB.1400S-M	N1206			■		45...60	700	16 (2.5)/2 (0.4)	■	■		■	■	43		■	■	■		■			■			■		■
RAK-TB.1410B-M	N1206			■		50...70	700	16 (2.5)/2 (0.4)	■	■		■	■	43	100	■	■	■		■			■			■		
RAK-TB.1420S-M	N1206			■		65...80	700	16 (2.5)/2 (0.4)	■	■		■	■	43		■	■	■		■			■			■		
RAK-TR.1000B-H	N1205	■				15...95	700	16 (2.5)/6 (2.5)	■	■		■	■	43	100	■	■	■		■		■			■	■	■	
RAK-TR.1000S-H	N1205	■				15...95	700	16 (2.5)/6 (2.5)	■	■		■	■	43		■	■	■		■		■			■	■	■	
RAK-TR.1210B-H	N1205	■				15...82	700	16 (2.5)/6 (2.5)	■	■		■	■	43	100	■	■	■		■		■			■	■	■	
RAK-TW.1000S-H	N1202		■			15...95	700	16 (2.5)/6 (2.5)	■	■		■	■	43		■	■	■		■		■			■	■	■	
RAK-TW.1200B-H	N1202		■			40...120	700	16 (2.5)/6 (2.5)	■	■		■	■	43	100	■	■	■		■		■				■	■	
RAK-TW.1200S-H	N1202		■			40...120	700	16 (2.5)/6 (2.5)	■	■		■	■	43		■	■	■		■		■				■	■	
RAK-TW.5000S-H[3]	N1203		■			65...5	1600	16 (2.5)/6 (2.5)	■	■		■	■	43		■	■	■		■		■		■	■			
RAK-TW.5010S-H[3]	N1203		■			50...-10	1600	16 (2.5)/6 (2.5)	■	■		■	■	43		■	■	■		■		■		■	■			
RAK-TW.5000HS[3]	N1203		■			5...65	1600	16 (2.5)/6 (2.5)	■			■		65		■	■	■		■		■		■	■			
RAK-TW.1200HP	N1202		■			40...120	700	16 (2.5)/6 (2.5)	■			■		65	100	■	■	■		■		■				■	■	
RAK-TW.1000HB[5]	N1202		■			15...95	700	16 (2.5)/6 (2.5)	■	■		■	■	65	100	■	■	■		■		■			■	■	■	
RAZ-ST.011FP-J	N1214	■			■	TR: 15...95 STB: 100	700	16 (2.5)/2 (0.4)	■	■	■	■	■	40	100		■			■		■	■			■		
RAZ-ST.030FP-J	N1214	■			■	TR: 15...95 STB: 110	700	16 (2.5)/2 (0.4)	■	■	■	■	■	40	100		■			■		■	■			■	■	
RAZ-ST.1500P-J	N1214	■			■	TR: 15...95 STB: 110...130	700	16 (2.5)/2 (0.4)	■	■	■	■	■	40	100		■			■		■	■			■		
RAZ-ST.1510P-J	N1212	■			■	TR: 15...95 STB: 90...110	700	16 (2.5)/6 (2.5)	■	■	■	■	■	40	100		■			■		■	■			■		
RAZ-TW.1000P-J	N1212	■	■			TR: 15...95 TW: 15...95	700	16 (2.5)/6 (2.5)	■	■		■	■	40	100		■			■		■				■		
RAZ-TW.1200P-J	N1212	■	■			TR: 40...120 TW: 40...120	700	16 (2.5)/6 (2.5)	■	■		■	■	40	100		■			■		■				■		
TKM2	N1291		■			20...110	-	10 (2) A	■					54	200		■					■			■			
QAF63.2-J[1]	A6V10432020xx	Sensor				0...15	2000	see data sheet	■	■				42					■			■	■	■				
QAF63.6-J[1]	A6V10432020xx	Sensor				0...15	6000	see data sheet	■	■				42					■			■	■	■				
QAF64.2-J[1]	A6V10432020xx		■	■		0...15	2000	see data sheet	■	■				42					■			■	■	■	■			
QAF64.6-J[1]	A6V10432020xx		■	■		0...15	6000	see data sheet	■	■				42					■			■	■	■	■			
QAF81.3	N1284		■			-5...15	3000	10 (2) A	■	■				54					■				■	■	■			
QAF81.6	N1284		■			-5...15	6000	10 (2) A	■	■				54					■				■	■	■			
QAF81.6M	N1284			■		-5...15	6000	10 (2) A	■	■				54					■				■	■	■			
QAF65.3M-J	A6V11965899xx				■	-10...15	3000	16 (0.1)/2 (0.1)	■	■				65					■				■	■	■			
QAF65.6M-J	A6V11965899xx				■	-10...15	6000	16 (0.1)/2 (0.1)	■	■				65					■				■	■	■			
QAF65.3AR-J	A6V12051788xx				■	-10...15	3000	16 (0.1)/2 (0.1)	■	■				65					■				■	■	■			
QAF65.6AR-J	A6V12051788xx				■	-10...15	6000	16 (0.1)/2 (0.1)	■	■				65					■				■	■	■			
TRG2[2]	N1329	■				-5...50	-	10 (2) A	■					54							■	■			■			
TRG22	N1329	■				-5...50	-	10 (2) A	■					54							■	■			■			
RAM-TR.2000M	N1197	■				20...90	-	16 (0.2) A	■	■			■	20		■		■				■				■	■	■
RAM-TW.2000M	N1197		■			20...90	-	16 (0.2) A	■	■			■	20		■		■				■				■	■	■

Accessories and Spare Parts (Capillary clamps etc.) see data sheet „CE1N1193"

[1] Electronic frost protection unit with 0...10 V (0...15 °C) output signal / manual or automatic reset function

[2] With variable switching differential TRG2: 0,7..6 K

[3] An ALT-AB200 protection pocket is generally used for ductwork

[4] This field should not be considered complete or all encompassing. Various other applications are possible.

[5] Replacment for RAK-TW.1000B-H

6

ARG100.01

Mounting frame set ARG100.01

Mounting frame set for square conduit boxes for use with room thermostats

Data sheet	A6V11190640
Dimensions (W x H x D)	115 x 115 mm
Warranty	24 Months

Stock no.	Product no.
S55772-T102	**ARG100.01**

6

Room thermostats RDG2.. with KNX communications

RDG2..KN

- KNX communications
- 3 multifunctional inputs for keycard contact, external room / return air temperature (NTC3K; QAH11.1, QAA32 or LG-Ni1000 sensors), heat / cool changeover, operation mode changeover, window contact on/off, dewpoint monitor, electrical heater enabled, fault contact, presence detector
- Operating modes: Comfort, Economy and Protection
- Automatic or manual DC fan or 1-/3-speed
- Automatic or manual heating / cooling changeover
- Adjustable commissioning and control parameters
- Minimum and maximum setpoint limitation
- Backlit display
- Green leaf function
- Local weekly time program (with 3 Comfort periods per day)
- Manager /Subordinate (M/S) function
- Delta temperature control for district heating and cooling
- Commissioning via Smartphone APP “PCT Go”, local HMI or KNX tools.

Data sheet	A6V11545853
Setpoint setting range	5...40 °C
Switching differential	Heating: 0.5...6 K; Cooling: 0.5...6 K
Communication	Bus: KNX (S-mode and LTE with Synco)
Analog output, signal	DC 0...10 V
Relay output, switching current	5 (4) A
Type of fixing	Wall mounting with screws
Degree of protection	IP30
Dimensions (W x H x D)	92 x 134 x 25 mm

KNX communicating room thermostat. Outputs modulating (PWM / 3-pos.) or on/off. Fan coil (3-speed / DC fan), universal applications

RDG200KN

- Built-in temperature and humidity sensors
- For applications with 2-position (on/off or PWM) or 3-position control outputs
- For applications with 3-speed or DC 0...10 V fan
- AC 230 V or AC 24 V power supply.

Application selectable:
- 2-pipe system
- 2-pipe system with electrical heater
- 2-pipe system and radiator / floor heating
- 2-pipe / 2-stage heating or cooling systems
- 4-pipe system
- 4-pipe system with electrical heater
- 4-pipe / 2-stage heating and cooling system (selectable also for 2-stage cooling / 1-stage heating or 2-stage heating / 1-stage cooling)

Data sheet	A6V11545853
Operating voltage	AC 24 V AC 230 V
Analog inputs, number	3
Analog outputs	Fan. 1 (DC 0...10 V)
Analog outputs, number	1
Digital inputs, number	3
Relay outputs	Fan: 1- or 3-speed
Relay output, switching voltage	AC 24 V or 230 V
Triac outputs	Valve, el. heater 2-position, PWM, 3-position
Triac outputs, number	4
Triac output, switching voltage	AC 24...230 V
Triac output, switching current	1 A

Stock no.	Product no.
S55770-T409	**RDG200KN**

KNX communicating room thermostat in black. Outputs modulating (PWM / 3-pos.) or on/off. Fan coil (3-speed / DC fan), universal applications

RDG200KN/BK

- Built-in temperature and humidity sensors
- Black color device RAL9011
- For applications with 2-position (on/off or PWM) or 3-position control outputs
- For applications with 3-speed or DC 0...10 V fan
- AC 230 V or AC 24 V power supply.

Application selectable:
- 2-pipe system
- 2-pipe system with electrical heater
- 2-pipe system and radiator / floor heating
- 2-pipe / 2-stage heating or cooling systems
- 4-pipe system
- 4-pipe system with electrical heater
- 4-pipe / 2-stage heating and cooling system (selectable also for 2-stage cooling / 1-stage heating or 2-stage heating / 1-stage cooling)

Data sheet	A6V11545853
Operating voltage	AC 24 V AC 230 V
Analog inputs, number	3
Analog outputs	Fan. 1 (DC 0...10 V)
Analog outputs, number	1
Digital inputs, number	3
Relay outputs	Fan: 1- or 3-speed
Relay output, switching voltage	AC 24 V or 230 V
Triac outputs	Valve, el. heater 2-position, PWM, 3-position
Triac outputs, number	4
Triac output, switching voltage	AC 24...230 V
Triac output, switching current	1 A

Stock no.	Product no.
S55770-T452	**RDG200KN/BK**

6

RDG204KN

KNX communicating room thermostat with CO2 sensor. Outputs modulating (PWM / 3-pos.) or on/off. Fan coil (3-speed / DC fan), universal applications

- Built-in temperature, humidity and CO2 sensors
- Indoor air quality monitoring and controlling (CO2) via fresh air damper
- Display of CO2 value in ppm (parts per million) or with text
- For applications with 2-position (on/off or PWM) or 3-position control outputs
- For applications with 3-speed or DC 0...10 V fan
- AC 230 V or AC 24 V power supply.

Application selectable:
- 2-pipe system
- 2-pipe system with electrical heater
- 2-pipe system and radiator / floor heating
- 2-pipe / 2-stage heating or cooling
- 4-pipe system
- 4-pipe system with electrical heater
- 4-pipe / 2-stage heating and cooling system (selectable also for 2-stage cooling / 1-stage heating or 2-stage heating / 1-stage cooling)

Data sheet	A6V11545853
Operating voltage	AC 24 V AC 230 V
Analog inputs, number	3
Analog outputs	Fan, fresh air damper: 2 (DC 0...10 V)
Analog outputs, number	2
Digital inputs, number	3
Relay outputs	Fan: 1- or 3-speed
Relay output, switching voltage	AC 24 V or 230 V
Triac outputs	Valve, el. heater, fresh air damper 2-position, PWM, 3-position
Triac outputs, number	4
Triac output, switching voltage	AC 24...230 V
Triac output, switching current	1 A

Stock no.	Product no.
S55770-T410	**RDG204KN**

6

KNX communicating room thermostat. Outputs modulating (DC) or on/off. Fan coil (3-speed / DC fan) or universal applications

RDG260KN

- Built-in temperature and humidity sensors
- For applications with DC control outputs and DC or 3-speed fan output
- For applications with 2-position control output with DC fan output
- AC or DC 24 V operating voltage

Application selectable:
- 2-pipe system
- 2-pipe system with electrical heater
- 2-pipe system and radiator / floor heating
- 2-pipe / 2-stage heating or cooling system
- 4-pipe system
- 4-pipe system with electrical heater
- 4-pipe / 2-stage heating and cooling system (selectable also for 2-stage cooling / 1-stage heating or 2-stage heating / 1-stage cooling)
- 4-pipe system with 6-port ball valves and PICV
- Heating / cooling with 6-port ball valves

Data sheet	A6V11545853
Operating voltage	AC/DC 24 V
Analog inputs, number	3
Analog outputs	Valve, el. heater: 4 Fan: 1 (DC 0...10 V)
Analog outputs, number	5
Digital inputs, number	3
Relay outputs	Valve, compressor or el. heater: 2 outputs, 2-position Fan: 1- or 3-speed
Relay output, switching voltage	AC 24...230 V

Stock no.	Product no.
S55770-T412	**RDG260KN**

6

RDG260KN/BK

KNX communicating room thermostat in black. Outputs modulating (DC) or on/off. Fan coil (3-speed / DC fan) or universal applications

- Built-in temperature and humidity sensors
- Black color device RAL9011
- For applications with DC control outputs and DC or 3-speed fan output
- For applications with 2-position control output with DC fan output
- AC or DC 24 V operating voltage

Application selectable:
- 2-pipe system
- 2-pipe system with electrical heater
- 2-pipe system and radiator / floor heating
- 2-pipe / 2-stage heating or cooling system
- 4-pipe system
- 4-pipe system with electrical heater
- 4-pipe / 2-stage heating and cooling system (selectable also for 2-stage cooling / 1-stage heating or 2-stage heating / 1-stage cooling)
- Heating / cooling with 6-port ball valves

Data sheet	A6V11545853
Operating voltage	AC/DC 24 V
Analog inputs, number	3
Analog outputs	Valve, el. heater: 4 Fan: 1 (DC 0...10 V)
Analog outputs, number	5
Digital inputs, number	3
Relay outputs	Valve, compressor or el. heater: 2 outputs, 2-position Fan: 1- or 3-speed
Relay output, switching voltage	AC 24...230 V

Stock no.	Product no.
S55770-T453	**RDG260KN/BK**

6

KNX communicating room thermostat with CO2 sensor. Outputs modulating (DC) or on/off. Fan coil (3-speed / DC fan) or universal applications

RDG264KN

- Built-in temperature, humidity and CO2 sensors
- Indoor air quality monitoring and controlling (CO2) via fresh air damper
- Display of CO2 value in ppm (parts per million) or with text
- For applications with DC control outputs and DC or 3-speed fan output
- For applications with 2-position control output with DC fan output
- AC or DC 24 V operating voltage

Application selectable:
- 2-pipe system
- 2-pipe system with electrical heater
- 2-pipe system and radiator / floor heating
- 2-pipe / 2-stage heating or cooling system
- 4-pipe system
- 4-pipe system with electrical heater
- 4-pipe / 2-stage heating and cooling system (selectable also for 2-stage cooling / 1-stage heating or 2-stage heating / 1-stage cooling)
- Heating / cooling with 6-port ball valves

Data sheet	A6V11545853
Operating voltage	AC/DC 24 V
Analog inputs, number	3
Analog outputs	Valve, el. heater: 4 Fan, fresh air damper: 1 (DC 0...10 V)
Analog outputs, number	6
Digital inputs, number	3
Relay outputs	Valve, compressor or el. heater: 2 outputs, 2-position Fan: 1- or 3-speed
Relay output, switching voltage	AC 24...230 V

Stock no.	Product no.
S55770-T413	**RDG264KN**

6

RDF8..KNX Flush Mount

Flush mount touch screen KNX room thermostat for 2-/4-pipe FCU with on/off outputs, 2x universal input and electrical heater application, fit for both round and square conduit boxes

- Operating modes: Comfort, Economy and Protection
- For heating and/or cooling applications
- 2 or 3-position control outputs
- Output for 1-speed or 3-speed fan
- 2 multifunctional inputs for keycard contact, external room / return air temperature (QAH11.1, QAA32), heat / cool changeover, window contact on/off, dewpoint monitor, electrical heater enabled, fault contact, presence detector
- Automatic or manual heating/cooling changeover
- Adjustable commissioning and control parameters
- Minimum and maximum setpoint limitation
- Color of housing: Ivory white or black
- Backlit display

Application selectable:
- 2-pipe system
- 2-pipe system with electrical heater
- 4-pipe system

Data sheet	N3174
Power consumption	6 VA
Setpoint setting range	5...40 °C
Switching differential	0.5...6 K
Communication	Bus: KNX (S-mode and LTE mode with Synco 700)
Analog inputs, number	2
Relay outputs	Fan: N.O. contacts, non-floating Valve: N.O. contacts, non-floating
Relay outputs, number	5
Relay output, switching voltage	AC 230 V
Relay output, switching current	5 (2) A
Degree of protection	IP30
Dimensions (W x H x D)	86 x 86 x 47 mm

6

Range overview RDF8..KNX Flush Mount

Product Title	Operating voltage [V]	Stock no.	Product no.
Flush mount touch KNX room thermostat for 2-/4-pipe FCU with on/off output and 2x universal input, fit for both round and square conduit boxes, black	AC 230	S55770-T429	**RDF800KN/VB**
Flush mount touch KNX room thermostat for heating applications and/or VRF Room Unit with KNX Interface to VRF Gateway, for square and round conduit boxes	AC 230	S55770-T415	**RDF880KN**
Flush mount touch KNX room thermostat for 2-/4-pipe FCU with on/off output and 2x universal input, fit for both round and square conduit boxes	AC 230	S55770-T350	**RDF800KN**

Flush mount KNX room thermostat for 2-/4-pipe FCU with on/off outputs, 2x universal input and electrical heater application, fit for both round and square conduit boxes

RDF6..KNX Flush Mount

Flush-mount room thermostat with LCD for fan coil units and compressors in DX-type equipment
- KNX communications
- For heating and/or cooling applications
- 2 or 3-position control outputs
- Output for 1-speed or 3-speed fan
- 2 multifunctional inputs for keycard contact, external room / return air temperature (QAH11.1, QAA32), heat / cool changeover, operation mode changeover, window contact on/off, dewpoint monitor, electrical heater enabled, fault contact, presence detector
- Operating modes: Comfort, Economy and Protection
- Automatic or manual heating/cooling changeover
- Adjustable commissioning and control parameters
- Minimum and maximum setpoint limitation
- Backlit display
- Color of housing: signal white (RAL 9003) or black
- Independent function for window contact, presence detector (standard presence and hotel presence)

Application selectable:
- 2-pipe system
- 2-pipe system with electrical heater
- 4-pipe system

Data sheet	N3076
Power consumption	2 VA
Switching differential	0.5...6 K
Communication	KNX
Analog inputs, number	2
Relay outputs	Fan: N.O. contacts, non-floating Valve: N.O. contacts, non-floating
Relay outputs, number	5
Relay output, switching voltage	AC 230 V
Relay output, switching current	5 (2) A
Type of fixing	With screws on recessed round conduit box diameter min. 60 mm
Dimensions (W x H x D)	86 x 86 x 46 mm

Range overview RDF6..KNX Flush Mount

Product Title	Operating voltage [V]	Stock no.	Product no.
Flush mount KNX room thermostat for 2-/4-pipe FCU with on/off output and 2x universal input, fit for both round and square conduit boxes	AC 230	S55770-T293	**RDF600KN**
Flush mount KNX room thermostat for 2-/4-pipe FCU with on/off output, KNX switching group, four buttons for switching lights and blinds and 2x universal input, fit for both round and square conduit boxes	AC 230	S55770-T400	**RDF600KN/S**
Flush mount KNX room thermostat for 2-/4-pipe FCU with on/off output and 2x universal input, fit for both round and square conduit boxes, black	AC 230	S55770-T430	**RDF600KN/VB**

RDF3..MB Flush Mount

Flush mount MODBUS room thermostat for 2-/4-pipe FCU with on/off outputs and optional 2x universal input and electrical heater application, fit for square conduit boxes

- Modbus communications
- For heating and/or cooling applications
- 2 or 3-position control outputs
- Output for 1-speed or 3-speed fan
- 2 multifunctional inputs for keycard contact, external room / return air temperature (QAH11.1, QAA32), heat / cool changeover, operation mode changeover, window contact on/off, dewpoint monitor, electrical heater enabled, fault contact
- No external input for RDF302.B
- Operating modes: Comfort, Economy and Protection
- Automatic or manual heating/cooling changeover
- Adjustable commissioning and control parameters
- Minimum and maximum setpoint limitation
- Backlit display

Application selectable:

- 2-pipe system
- 2-pipe system with electrical heater
- 4-pipe system

Range overview RDF3.. Modbus Flush Mount

Product Title	Operating voltage [V]	Color	Stock no.	Product no.
Flush mount MODBUS room thermostat for 2-/4-pipe FCU with on/off outputs, 2x universal input optional electrical heater application, fit for square conduit boxes, BLACK	AC 230	Black	S55770-T428	**RDF302/VB**
Flush mount MODBUS room thermostat for 2-/4-pipe FCU with on/off outputs and optional electrical heater application, fit for square conduit boxes	AC 230	White	S55770-T416	**RDF302.B**
Flush mount MODBUS room thermostat for 2-/4-pipe FCU with on/off outputs, 2x universal input optional electrical heater application, fit for square conduit boxes	AC 230	White	S55770-T238	**RDF302**

Accessories for RDF302

Product Title	Data sheet	Stock no.	Product no.
Mounting bracket 10 mm thick	N3009	BPZ:ARG70.3	**ARG70.3**

Flush mount MODBUS room thermostat for 2-/4-pipe FCU with on/off valves, ECM fan, 2x universal input and electrical heater application, fit for both round and square conduit boxes

RDF6..MB Flush Mount

Flush-mount room thermostat for round and square conduit boxes with LCD for fan coil units and compressors

- Modbus communications
- For heating and/or cooling applications
- 2 or 3-position control outputs
- ECM fan output
- B1 input, freely selectable for (RDF660MB/MM only):
  - External room temperature sensor or return air temperature sensor
  - Automatic heating/cooling changeover sensor
- S1 input, freely selectable for (RDF660MB/MM only):
  - Window contact
  - Presence detector
  - Hotel keycard
- 2 multifunctional inputs (X1 and X2), freely selectable for (RDF660MB only):
  - External room temperature sensor or return air temperature sensor (AI)
  - Automatic heating/cooling changeover sensor (AI)
  - Window contact (DI)
  - Dew point sensor (DI)
  - Electric heater enabled (DI)
  - Fault input (DI)
  - Monitor input (DI)
  - Monitor input (AI)
  - Automatic heating/cooling changeover sensor (DI)
  - Presence detector (DI)
  - Hotel keycard (DI)
- Operating modes: Comfort, Economy and Protection
- Automatic or manual heating/cooling changeover
- Adjustable commissioning and control parameters
- Minimum and maximum setpoint limitation
- Color of housing: signal white (RAL 9003)
- Backlit display

Application selectable:

- 2-pipe system
- 4-pipe system

Power consumption	9 VA
Switching differential	0.5...6 K
Communication	RS485 Modbus
Analog outputs	Fan: DC 0...10 V
Analog output, signal	DC 0...10 V
Relay outputs	Valve: On/Off
Relay output, switching voltage	AC 230 V
Relay output, switching current	5 (2) A
Dimensions (W x H x D)	86 x 86 x 36 mm

Range overview RDF6.. Modbus Flush Mount

Product Title	Operating voltage [V]	Color	Stock no.	Product no.
Flush mount MODBUS room thermostat for 2-/4-pipe FCU with on/off valves, ECM fan and 2x universal input with optional electrical heater application, fit for both round and square conduit boxes	AC 230	White	S55770-T439	**RDF660MB**
Flush mount MODBUS room thermostat for 2-/4-pipe FCU with on/off valves, ECM fan and 2x basic input, fit for both round and square conduit boxes	AC 230	White	S55770-T433	**RDF660MB/MM**

RDB1..

BACnet communicating room thermostat

- BACnet MS/TP Communication
- Valve actuators: On/off, 3-position or DC 0...10 V*
- Electric heater: On/off
- Built-in temperature sensor
- 3 configurable inputs for external room/return air temperature, supply air temperature limitation, heating/cooling changeover, window contact, and occupancy sensor
- Operating modes: Comfort, Standby (Economy), OFF, and mold protection
- Room temperature control: Based on built-in temperature sensor or room/return air temperature
- Heating/cooling changeover: manual, or automatic via water temperature sensor or digital input
- Supply air temperature limitation
- Automatic valve exercise
- Backlit LCD

*Up to 2 DC 0...10 V control outputs are available i.e., the control of a DC fan, DC cooling valve, and DC heating valve is not possible

Application selectable:
- 2-pipe system
- 2-pipe system with electrical heater
- 4-pipe system

Communication	BACnet MS/TP
Degree of protection	IP20

RDB160BN

FCU/Universal App. Room Thermostat with BACnet MS/TP Communication

- Operating voltage: AC 230 V
- Fan: Off, 1, 2, 3-speed or DC 0...10 V* (automatic or manual)

Data sheet	A6V11913047
Operating voltage	AC 230 V
Measuring range	0...50 °C
Power consumption	3 W
Digital output, switching current	3 A
Analog outputs, number	2
Digital inputs, number	1
Relay outputs	Fan: 1-,2- or 3-speed
Relay output, switching voltage	230 V
Triac outputs, number	2
Triac output, switching voltage	AC 24...230 V
Dimensions (W x H x D)	102 x 120 x 29 mm
Color	White

Stock no.	Product no.
S55770-T426	**RDB160BN**

Room thermostat for temperature and air quality control with KNX communications, AC 24 V, VAV heating and cooling systems

RDG405KN

- KNX communications
- Output DC 0...10 V for VAV actuator and auxiliary output ON/OFF, PWM or 3-position or 3-position for VAV actuator and auxiliary output DC 0...10 V
- 2 multifunctional inputs for keycard contact, external room / return air temperature (1x, QAH11.1, QAA32), heat / cool changeover, operation mode changeover, window contact on/off, dewpoint monitor, electrical heater enabled, fault contact, presence detector
- 1 input DC 0...10 V for damper position feedback, for CO2 sensor
- Operating modes: Comfort, Economy and Protection
- Modulating PI control
- Control depending on the room or the return air temperature and air quality
- Automatic or manual heating / cooling changeover
- Adjustable commissioning and control parameters
- Minimum and maximum setpoint limitation
- Minimum and maximum limitation of air flow signal
- Output signal inversion (DC 0...10 V) as an option
- Backlit display

Application selectable:
- Single-duct system
- Single-duct system with electrical heater
- Single-duct system and radiator / floor heating
- Single-duct system with heating / cooling coil

Data sheet	N3192
Operating voltage	AC 24 V
Power consumption	2 VA
Setpoint setting range	5...40 °C
Switching differential	Heating: 0.5...6 K; Cooling: 0.5...6 K
Communication	Bus: KNX (S-mode and LTE mode with Synco 700)
Analog inputs, number	2
Analog outputs	VAV actuator, electric heater, valve
Analog outputs, number	1
Analog output, signal	DC 0...10 V
Analog output, current	1 mA
Digital inputs, number	1
Triac outputs	VAV actuator, valve, el. heater 2-position, PWM, 3-position
Triac outputs, number	1
Triac output, switching voltage	24 V
Triac output, switching current	1 A
Type of fixing	Wall mounting with screws
Degree of protection	IP30
Dimensions (W x H x D)	93 x 128 x 30.8 mm
Warranty	24 Months

Stock no.	Product no.
S55770-T348	**RDG405KN**

RDD810KN

Flush mount touch screen KNX room thermostat for heating (SPDT) with 2x universal input, fit for both round and square conduit boxes

- KNX communications
- Operating modes: Comfort, Economy and Protection
- Control output: changeover contact (SPDT)
- 2 multifunctional inputs for keycard contact, external room / return air temperature (QAH11.1, QAA32), window contact on/off, presence detector, fault contact, presence detector
- Adjustable commissioning and control parameters
- Minimum and maximum setpoint limitation
- Color of housing: Ivory white
- Backlit display

Data sheet	N3175
Operating voltage	AC 230 V
Power consumption	6 VA
Setpoint setting range	5...40 °C
Switching differential	0.5...6 K
Communication	Bus: KNX (S-mode and LTE mode with Synco 700)
Analog inputs, number	2
Relay outputs	Heating: contacts, floating
Relay outputs, number	1
Relay output, switching voltage	AC 24...230 V
Relay output, switching current	5 (2) A
Degree of protection	IP30
Dimensions (W x H x D)	82 x 82 x 47 mm
Warranty	24 Months

Stock no.	Product no.
S55770-T444	**RDD810KN**

6

RTU/HP Room Thermostat with BACnet MS/TP Communication

RDY2000BN

- Controls conventional systems with up to 3 stages heating and 3 stages cooling
- Controls heat pumps with 1 or 2 compressors and up to 2 stages of auxiliary heat
- Backlit 5-inch LCD touch screen
- On-board temperature and humidity sensor
- Multiple configurable inputs and outputs enable advanced control strategies
- Seven-day (2- or 4-event) occupancy scheduling
- BTL listed BACnet MS/TP communication

Dimensions (W x H x D)	121.9 x 121.9 x 64.5 mm
Color	White
Warranty	24 Months

Stock no.	Product no.
S55770-T364	**RDY2000BN**

6

RDF870KN

Flush mount touch KNX PM2.5 & CO2 & Ventilation Controls with on/off or ECM fans selectable and 2x DC 0-10 V input, fit for both round and square conduit boxes

- AC 230 V operating voltage, large, backlit display
- Display and setpoint adjustment for PM2.5 and CO2 control
- Display of room temperature, outside temperature, VOC (volatile organic compound) and RH (relative humidity)
- Support 1-/3-/4-speed On/Off fan or DC fan output
- Two multifunctional inputs for external passive and DC 0...10 V sensors
- Operating modes: Comfort, Economy and Protection
- KNX S-Mode
- KNX commissioning via ETS or local control parameters
- KNX integration into Desigo via group (ETS) or individual addressing
- KNX integration into third-party system via group addressing (ETS)
- Mounting on recessed square 86 mm box or round 60 mm with 60 mm fixing centers and minimum 40 mm depth
- Color of housing: Ivory white (RAL 9001)

Application selectable:
- PM2.5 control only
- CO2 control only
- PM2.5 & CO2 controls (CO2 higher priority in control)
- Ventilation control

2x sensor inputs are selectable:
0: No function
1: Temperature (AI) (NTC 10k)
2: Temperature (AI) (0...10 V)
3: PM2.5 (AI) µg/m3 (0...10 V)
4: CO2 (AI) ppm (0...10 V)
5: VOC (AI) % (0...10 V)
6: VOC (AI) mg/m³ (0...10 V)
7: RH (AI) % (0...10 V)
8: Alarm input (DI)
9: Dummy AI (0...10 V) (RU only)

Data sheet	A6V11439454
Operating voltage	AC 230 V 230 V
Power consumption	7 VA 2.5 W
Communication	KNX S-Mode
Analog outputs	DC 0...10 V for ECM fan output
Relay outputs	Fan: N.O. contacts, non-floating Valve: N.O. contacts, non-floating
Degree of protection	IP30
Dimensions (W x H x D)	86 x 86 x 46.8 mm
Color	White
Warranty	24 Months

Stock no.	Product no.
S55770-T407	**RDF870KN**

Flush mount touch MODBUS PM2.5 & CO2 & Ventilation Controls with on/off or ECM fans selectable and 2x DC 0-10 V input, fit for both round and square conduit boxes

RDF870MB

- AC 230 V operating voltage, large, backlit display
- Display and setpoint adjustment for PM2.5 and CO2 control
- Display of room temperature, outside temperature, VOC (volatile organic compound) and RH (relative humidity)
- Support 1-/3-/4-speed On/Off fan or DC fan output
- Two multifunctional inputs for external passive and DC 0...10 V sensors
- Operating modes: Comfort, Economy and Protection
- RS485 Modbus RTU slave mode
- Modbus commissioning via third-party tool, e.g. Modbus scan, Modbus poll, etc
- Mounting on recessed square 86 mm box or round 60 mm with 60 mm fixing centers and minimum 40 mm depth
- Color of housing: Ivory white (RAL 9001)

RDF870MB can be configured as a room unit via DIP switches.

It provides the following additional functions:
- Setpoint adjustment and display for room temperature, VOC, RH and display of outside temperature
- Four remote digital outputs via bus and controlled by a master controller

Application selectable:
- PM2.5 control only
- CO2 control only
- PM2.5 & CO2 controls (CO2 higher priority in control)
- Ventilation control

2x sensor inputs are selectable:
0: No function
1: Temperature (AI) (NTC 10k)
2: Temperature (AI) (0...10 V)
3: PM2.5 (AI) µg/m3 (0...10 V)
4: CO2 (AI) ppm (0...10 V)
5: VOC (AI) % (0...10 V)
6: VOC (AI) mg/m³ (0...10 V)
7: RH (AI) % (0...10 V)
8: Alarm input (DI)
9: Dummy AI (0...10 V) (RU only)

Data sheet	A6V11439454
Operating voltage	AC 230 V
Power consumption	6 VA 2.1 W
Communication	RS485 Modbus
Analog outputs	DC 0...10 V for ECM fan output
Relay outputs	Fan: N.O. contacts, non-floating Valve: N.O. contacts, non-floating
Degree of protection	IP30
Dimensions (W x H x D)	86 x 86 x 47 mm
Color	White
Warranty	24 Months

Stock no.	Product no.
S55770-T408	**RDF870MB**

RDF880KN

Flush mount touch KNX room thermostat for heating applications and/or VRF Room Unit with KNX Interface to VRF Gateway, for square and round conduit boxes

- Large display, touch screen with backlight
- VRF HMI: temperature setpoint, fan speed and operating mode selections
- 2-position (ON/OFF) temperature control with potential free output for UFH via build-in / external temperature sensor
- Display room temperature value (↓ C) and relative humidity value (% r.h.) via a build-in temperature and humidity sensor
- One setpoint adjustment for both VRF HMI and UFH controls
- Fan auto and manual speed setting from 1 up to 7 speed
- Operating mode selection for VRF: AUTO, COOL, HEAT, FAN and DRY
- Operating mode selection for UFH: Comfort and Protection
- Economy operating mode for both VRF and UFH to save energy
- 2 multifunctional inputs (see details in functional descriptions)
- Adjustable control parameters for alternative settings
- KNX bus communications via S-mode
- Integration to VRF system via S-mode and third party gateways
- Commissioning via ETS download
- Wizard function for fast commissioning via HMI
- Alarm / Error information
- AC 230 V operating voltage
- Mounting on round box, with min 60 mm diameter or recessed square 86 mm box with 60.3 mm fixing centers and min 40 mm depth

User Application selections via dipswitches:
1. Under Floor Heating only (UFH)
2. VRF HMI only (note: interface to VRF indoor unit via a third party VRF/KNX gateway)
3. Both UFH and VRF HMI

When VRF HMI is selected, it covers most daily VRF operations and the following parameters can be set to fit different VRF brands:
· Setpoint adjustment: - maximum / minimum limitations
· Fan speed adjustment: - auto / manual speeds (up to 7 speeds)
· Operating mode selection: - AUTO, HEAT, COOL, FAN and DRY
· Economy mode: - energy saving
· Fan swing adjustment (optional): - auto swing or fix at any position (10)
· Delay off timer (optional): - allow up to 23 hours operations before off

Data sheet	A6V11282546
Operating voltage	AC 230 V
Power consumption	6 VA
Setpoint setting range	5...40 °C
Switching differential	0.5...6 K
Communication	Bus: KNX (S-mode with Synco 700)
Analog inputs, number	2
Relay outputs	Heating: contacts, floating
Relay outputs, number	5
Relay output, switching voltage	AC 230 V
Relay output, switching current	5 (2) A
Degree of protection	IP30
Dimensions (W x H x D)	86 x 86 x 47 mm
Warranty	24 Months

Stock no.	Product no.
S55770-T415	**RDF880KN**

Mounting adapter for RDG2..

ARG200

Mounting adapter for allowing RDG2xx thermostat installation on the wall without conduit box

Data sheet	A6V11545853
Dimensions (W x H x D)	96 x 138 x 20 mm
Warranty	24 Months

Stock no.	Product no.
S55770-T438	**ARG200**

Mounting plate 120 x 120 mm for 4 x 4" housing

ARG70

Accessories for use with room thermostats RAA.., RAB.., RCC.., RCU.., RDD.., RDE.., RDF..

Data sheet	N3009
Dimensions (W x H x D)	120 x 120 x 6 mm
Warranty	24 Months

Stock no.	Product no.
BPZ:ARG70	**ARG70**

Changeover cable holder for QAH11..

ARG86.3

Changeover mounting kit for QAH11.. sensor for universal use as a strap-on sensor

Data sheet	N3009
Packaging unit	10 pieces
Warranty	60 Months

Stock no.	Product no.
BPZ:ARG86.3	**ARG86.3**

Cable temperature sensor PVC 4 m, NTC 3k

QAP1030/UFH

Data sheet	N1854
Measuring range, temperature	-20...70 °C
Sensing element, temperature	NTC 3k
Measurement accuracy	At -20...70 °C: ±0.3 K
Time constant	1.5 min to air
Protection pocket	Non
Material, protection pocket	None
Cable length	4 m
Warranty	60 Months

Stock no.	Product no.
S55720-S289	**QAP1030/UFH**

ARG70.2

Mounting plate 112 x 130 mm for surface wiring

Accessories for use with room thermostats RAA.., RAB.., RCC.., RCU.., RDD.., RDE.., RDF..

Data sheet	N3009
Dimensions (W x H x D)	112 x 130 x 10 mm
Warranty	24 Months

Stock no.	Product no.
BPZ:ARG70.2	**ARG70.2**

QAH11.1

Cable temperature sensor PVC 2.5 m, NTC 3 kOhm, without connectors

For installation in fan coil units as
- a return air temperature sensor
- a changeover sensor

Packing size: 10 pcs

Data sheet	N1840
Measuring range	For fixed cable
Sensing element	NTC 3k
Measuring range, temperature	-20...70 °C
Sensing element, temperature	NTC 3k
Time constant	Air v=0 m/s: 90 s
Connection cable	2-wire Ferrules
Cable length	2.5 m
Warranty	60 Months

Stock no.	Product no.
BPZ:QAH11.1	**QAH11.1**

QAA32

Room temperature sensor NTC 3 kOhm

Data sheet	N1747
Sensing element	NTC 3k
Measuring range, temperature	0...40 °C
Sensing element, temperature	NTC 3k
Time constant	360 s
Measurement accuracy	25 °C: ±0.3 K
Connection, electrical	Screw terminals
Degree of protection	IP30
Dimensions (W x H x D)	97 x 100 x 36 mm
Warranty	60 Months

Stock no.	Product no.
BPZ:QAA32	**QAA32**

Electromechanical room thermostats

RAA..1..

2-position controller for controlling the room temperature. The required temperature is adjusted with the setting knob on the front of the unit.
- Gas-filled diaphragm
- Color of housing front and baseplate: signal white RAL9003 (NCS S 0502-G)

Setpoint setting range	8...30 °C
Switching differential	≤1 K
Type of fixing	Wall mouting with screws
Degree of protection	IP30

Electromechanical room thermostats

RAA21/S

2-position controller for controlling the room temperature. The required temperature is adjusted with the setting knob on the front of the unit.
- Gas-filled diaphragm
- Scale from 1 to 5 (Scale 1: 10 °C, Scale 2: 15 °C, Scale 3: 20 °C, Scale 4: 25 °C, Scale 5: 30 °C)
- Color of housing front and baseplate: signal white RAL9003 (NCS S 0502-G)

Data sheet	A6V13570619
Dimensions (W x H x D)	96 x 97 x 35.3 mm
Color	Light white

Stock no.	Product no.
S55770-T506	RAA21/S

Electromechanical room thermostats

RAA41/S

2-position controller for controlling the room temperature. The required temperature is adjusted with the setting knob on the front of the unit.
- Gas-filled diaphragm
- Scale from 1 to 5 (Scale 1: 10 °C, Scale 2: 15 °C, Scale 3: 20 °C, Scale 4: 25 °C, Scale 5: 30 °C)
- Color of housing front and baseplate: signal white RAL9003 (NCS S 0502-G)

Data sheet	A6V13583431
Dimensions (W x H x D)	96 x 97 x 35.3 mm
Color	Light white

Stock no.	Product no.
S55770-T507	RAA41/S

Electromechanical room thermostat, public sector model

RAA11

- Heating only or cooling only
- No operating elements on the front of the unit

Data sheet	N3561
Dimensions (W x H x D)	96 x 97 x 36 mm
Color	Light white

Stock no.	Product no.
S55770-T219	**RAA11**

6

Standalone room thermostats
Heating and/or cooling

RAA21

Electromechanical room thermostat, basic model

- Heating only or cooling only
- Setpoint adjustment with knob

Data sheet	N3562
Dimensions (W x H x D)	96 x 97 x 35.3 mm
Color	Light white

Stock no.	Product no.
S55770-T220	**RAA21**

RAA31

Electromechanical room thermostat with on/off switch

- Heating only or cooling only
- Setpoint adjustment with knob
- On / off switch

Data sheet	N3563
Dimensions (W x H x D)	96 x 97 x 35.3 mm
Color	Light white

Stock no.	Product no.
S55770-T221	**RAA31**

6

RAA31.16

Electromechanical room thermostat with on/off switch and LED

Same functionality as RAA31 plus mode indication (red LED, needed AC 230 V)

Data sheet	N3563
Power consumption	0.5 VA
Dimensions (W x H x D)	98 x 97 x 35.3 mm
Color	Light white

Stock no.	Product no.
S55770-T222	**RAA31.16**

RAA31.26

Electromechanical room thermostat with on/off switch and LED, auxillary switch and LED

Same functionality as RAA31 plus 2 mode indications (red LED, needed AC 230 V) and additional independent on / off switch.

Data sheet	N3563
Power consumption	0.5 VA
Dimensions (W x H x D)	99 x 110 x 35.3 mm
Color	Light white

Stock no.	Product no.
S55770-T223	**RAA31.26**

Electromechanical room thermostat with selector heating/off/cooling, 1 output

RAA41

- Heating or cooling
- Setpoint adjustment with knob
- Switch for cooling / off / heating

Data sheet	N3564
Dimensions (W x H x D)	98 x 97 x 35.3 mm
Color	Light white

	Stock no.	Product no.
	S55770-T224	**RAA41**

Accessories for RAA..1..

Product Title	Data sheet	Stock no.	Product no.
Mounting plate 120 x 120 mm for 4 x 4" housing	N3009	BPZ:ARG70	**ARG70**
Mounting plate 112 x 130 mm for surface wiring	N3009	BPZ:ARG70.2	**ARG70.2**

6

RCU.. Universal

Electronic room thermostats for universal heating and cooling systems

- Electronic room temperature controller for heating and cooling operation
- PI control
- Operating mode changeover input for remote control
- Color of housing front: signal white RAL9003 (NCS S 0502-G)
- Color of baseplate: light grey RAL7035 (NCS 2801-Y43R)

Setpoint setting range	8...30 °C
Digital inputs, number	1
Digital input, contact query	3...6 mA DC 6...15 V
Digital input, application	Night setback
Type of fixing	Wall mounting with screw
Degree of protection	IP30
Dimensions (W x H x D)	97 x 114 x 43 mm

RCU10

Universal room thermostat for 4-pipe systems, AC 230 V, positioning signal 2 pt or PWM

- Heating and cooling sequence
- 2nd heating sequence
- Selectable P-band (1 K heating, 0.5 K cooling, or 4 K heating, 2 K cooling)
- Selectable dead zone (2 K or 5 K)
- Frost protection function

Data sheet	N3041
Operating voltage	AC 230 V
Power consumption	6 VA
Triac outputs	PWM or ON/OFF
Triac output, switching voltage	230 V
Triac output, switching current	0.02...1 A

	Stock no.	Product no.
	BPZ:RCU10	**RCU10**

RCU15

Universal room thermostat for 4-pipe systems, AC 24 V, positioning signal 2 pt or PWM

Same functionality and technical data as RCU10

In addition:
- Optional control depending on the room or return air temperature (with sensor QAH11.1)

Data sheet	N3048
Operating voltage	AC 24 V
Power consumption	6 VA
Triac outputs	PWM or ON/OFF
Triac output, switching voltage	24 V
Triac output, switching current	0.02...1 A

	Stock no.	Product no.
	BPZ:RCU15	**RCU15**

Accessories for RCU..

Product Title	Data sheet	Stock no.	Product no.
Mounting plate 120 x 120 mm for 4 x 4" housing	N3009	BPZ:ARG70	**ARG70**
Mounting plate 112 x 130 mm for surface wiring	N3009	BPZ:ARG70.2	**ARG70.2**

Electronic room thermostat with time switch, LCD and selection slider

REV..

Mains-independent, battery-operated room temperature controllers featuring user-friendly operation, easy-to-read display and large numbers

- Self-learning two-position controller with PID response (REV.., REV13.., REV24..)
- 3-position controller with PI response (for REV34..)
- Remote operation (REV.., REV13.., REV24, REV34..)
- Override button
- Sensor calibration and reset function
- Frost protection function and minimum limitation of setpoint
- Color of housing front: signal white RAL9003 (NCS S 0502-G)
- Color of baseplate: grey RAL7038

Operating mode selection:

- Automatic modes with time switch program
- Automatic mode with one or two heating phases (REV13..)
- Automatic mode with up to three comfort phases (REV.., REV24.., REV34..)
- Exception day mode with up to three comfort phases (REV.., REV24.., REV34..)
- Continuous comfort mode
- Continuous energy saving mode
- Frost protection

Operating voltage	DC 3 V
Battery life	2 years
Setpoint setting range	3...35 °C
Relay output, switching voltage	AC 24...250 V
Relay output, switching current	0.1...6 (2.5) A For RF versions: 0.2...16 (2) A
Degree of protection	IP20

Range overview REV..

Product Title	Dimensions (WxHxD) [mm]	Data sheet	Stock no.	Product no.
Room thermostat with 2-point control and 24-hour time switch, batteries, only heating, receive time signal DCF77	130 x 94 x 30	N2201	BPZ:REV13DC	**REV13DC**
Room thermostat with 2-point control and 7-day time switch, receiver with relay outputs (RF set), batteries, heating or cooling, receive time signal DCF77	134.5 x 94 x 30	N2206	BPZ:REV24RFDC/SET	**REV24RFDC/SET**
Room thermostat with 2-point control and 24-hour time switch, batteries, only heating	130 x 94 x 30	N2201	BPZ:REV13	**REV13**
Room thermostat with 2-point control and 24-hour time switch, batteries, only heating, blister packaging	130 x 94 x 30	N2201	BPZ:REV13-XA	**REV13-XA**
Room thermostat with 2-point control and 7-day time switch, batteries, heating or cooling	134.5 x 94 x 30	N2205	BPZ:REV24	**REV24**
Room thermostat with 2-point control and 7-day time switch, batteries, heating or cooling, blister packaging	134.5 x 94 x 30	N2205	BPZ:REV24-XA	**REV24-XA**
Room thermostat with 2-point control and 7-day time switch, receiver with relay outputs (RF set), batteries, heating or cooling	134.5 x 94 x 30	N2206	BPZ:REV24RF/SET	**REV24RF/SET**
Room thermostat with 2-point control and 7-day time switch, receiver with relay outputs (RF set), batteries, heating or cooling, blister packaging	134.5 x 94 x 30	N2206	BPZ:REV24RF/SET-XA	**REV24RF/SET-XA**
Room thermostat with 3-position control and 7-day time switch, batteries, heating or cooling, blister packaging	134.5 x 94 x 30	N2208	BPZ:REV34-XA	**REV34-XA**

Application examples REV..

These are only a few examples of many applications that can be done with the thermostat REV...
More applications are described in “HIT” (the HVAC project engineering tool with a library of over 300 pre-configured HVAC-applications) and in the REV.. data sheet..

REV24

HAA001 EV2 HQ

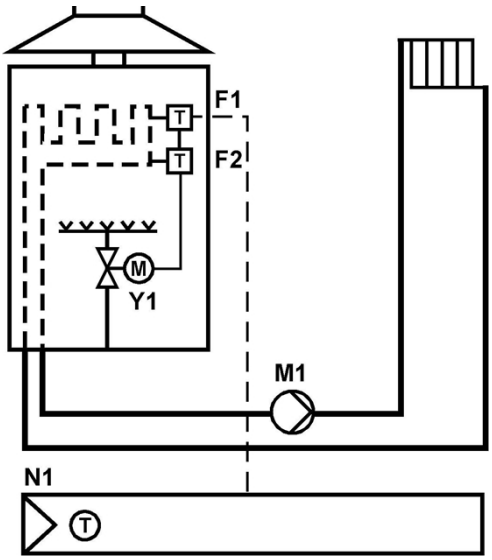

Room temperature controller with 7-day time switch, acting on on/off device

- 7-day time switch programme
- Three different 24-hour operating modes
- Continuous normal temperature mode
- Continuous economy temperature mode
- Standby with frost protection mode
- Holiday mode
- Override mode button
- Sensor calibration
- Installer parameter setting for pump kick and cooling
- Installer parameter setting for optimum start control in the morning
- Installer parameter setting for minimum limitation of set point
- Digital user interface
- Installer choice of algorithm: PID self learning; PID 12; PID 6; or 2-point

6

REV34

H0C002 EV3 HQ

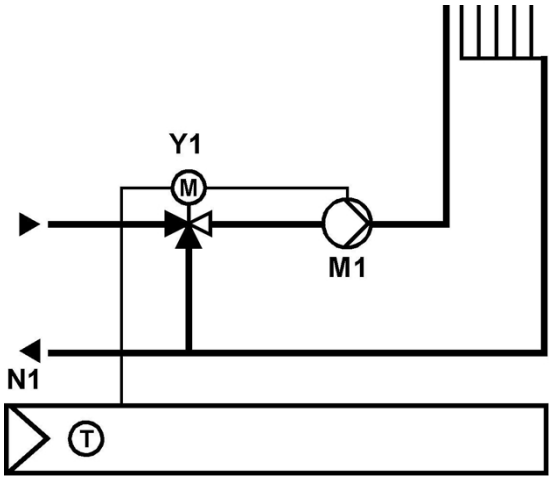

Room temperature controller with 7-day time switch, acting on 3-position valve actuator

- 3-position controller with PI control
- 7-day time switch programme
- Three different 24-hour operating modes
- Continuous comfort temperature mode
- Continuous economy temperature mode
- Standby with frost protection mode
- Holiday mode
- Override mode button
- Digital user interface
- Sensor calibration
- Installer parameter setting for optimum start control in he morning
- Installer parameter setting for minimum limitation of set point
- Installer parameter setting for room size and heating capacity

Room thermostat with large LCD

RDH100..

Mains independent, battery powered electronic room thermostat with TPI output control. The required temperature is adjusted with the large setting knob on the front of the unit.
- Easy operation by large setting knob and large display
- For heating only
- Color of housing front: signal white RAL9003
- Color of baseplate: light gray RAL7035

Battery life	1 year
Setpoint setting range	5...30 °C
Relay outputs	Change-over contact, potential-free
Relay outputs, number	1
Relay output, switching voltage	24...250 V
Dimensions (W x H x D)	120 x 90 x 26.9 mm

Room thermostat RDH100

RDH100

Mains independent, battery powered electronic room thermostat with PID output control. The required temperature is adjusted with the large setting knob on the front of the unit.
- Easy operation by large setting knob and large display
- For heating only
- Color of housing front: signal white RAL9003
- Color of baseplate: light gray RAL7035
- 2 x 1.5 V AA alkaline batteries included

Operating voltage	DC 3 V
Color	Light white

Stock no.	Product no.
S55770-T377	**RDH100**

Room thermostat radio frequency set (transmitter and receiver)

RDH100RF/SET

Radio frequency controller set consisting of:
RDH100RF: Electronic room thermostat with radio frequency transmitter, same controller functionality as RDH100.
Technical data:
- Transmission frequency: 433 MHz
- Dimensions (W x H x D): 90 x 120 x 26.9 mm
- Transmitter table stand
- 2 x 1.5 V AA alkaline batteries included

RCR100/433: Radio frequency receiver with operating mode indication (433 MHz),
- Switching unit with relay outputs
- Receiver override button for manual switch-on/switch-off
- Mounting adapter plate for receiver

Operating voltage	Receiver: AC 230 V, Transmitter: DC 3 V
Color	Light white

Stock no.	Product no.
S55770-T378	**RDH100RF/SET**

RDJ100..

Room thermostat with 24-hour time switch and large LCD

Mains independent, battery powered electronic room thermostat with TPI output control. The required temperature is adjusted with the large setting knob on the front of the unit.
- Easy operation by large setting knob and large display
- For heating
- 24-hour (1-day) time programming
- Color of housing front: signal white RAL9003
- Color of baseplate: light gray RAL7035

Battery life	1 year
Setpoint setting range	5...30 °C
Relay outputs	Change-over contact, potential-free
Relay outputs, number	1
Relay output, switching voltage	AC 24...250 V
Dimensions (W x H x D)	120 x 90 x 26.9 mm

RDJ100

Room thermostat with 24-hour time switch and large LCD

Mains independent, time programming, battery powered electronic room thermostat with PID out control.
- With digital 24-hour time program
- Easy operation by large setting knob, large display and sliders
- Color of housing front: signal white RAL9003
- Color of baseplate: light gray RAL7035

Operating modes:
- Automatic operation with up to 2 heating periods per day
- Continuous Comfort
- Continuous Economy
- Frost Protection

Operating voltage	DC 3 V

Stock no.	Product no.
S55770-T379	**RDJ100**

RDJ100RF/SET

Room thermostat radio frequency set with 24-hour time switch (transmitter and receiver)

Time programming radio frequency set consisting of room thermostat RDJ100RF (with integrated radio transmitter) and receiver unit RCR100/433. Same functionality as RDJ100.

RDJ100RF: Electronic radio frequency room temperature controller

Technical data:
- Transmission frequency: 433 MHz
- Dimensions (W x H x D): 90 x 120 x 26.9 mm
- Transmitter table stand
- 2 x 1.5 V AA alkaline batteries included

RCR100/433: Radio frequency receiver with operating mode indication (433 MHz)
- Switching unit with relay outputs
- Receiver override button for manual switch-on/switch-off
- Mounting adapter plate for receiver

Operating voltage	Receiver: AC 230 V, Transmitter: DC 3 V

Stock no.	Product no.
S55770-T380	**RDJ100RF/SET**

Room thermostats with LCD

RDD100..

- 2-position control with on / off positioning signal output for heating
- Operating modes: Normal operation and energy saving mode
- Automatic operating mode changeover as an option
- Color of housing front and baseplate: signal white RAL9003 (NCS S 0502-G)

Setpoint setting range	5...35 °C
Switching differential	1 K
Relay outputs	Change-over contact, potential-free
Relay output, switching current	5 (2) A
Relay output, switching voltage	AC 24...230 V
Degree of protection	IP30

Room thermostat with LCD, AC 230 V

RDD100

- 2-position control with on / off positioning signal output for heating
- Operating modes: Normal operation and energy saving mode
- Automatic operating mode changeover as an option
- Color of housing front and baseplate: signal white RAL9003 (NCS S 0502-G)

Data sheet	N1420
Operating voltage	AC 230 V
Dimensions (W x H x D)	85 x 106 x 21.5 mm
Color	Light white

Stock no.	Product no.
S55770-T275	**RDD100**

Room thermostat with LCD, battery

RDD100.1

- 2-position control with on / off positioning signal output for heating
- Operating modes: Normal operation and energy saving mode
- Automatic operating mode changeover as an option
- Color of housing front and baseplate: signal white RAL9003 (NCS S 0502-G)

Data sheet	N1420
Operating voltage	DC 3 V
Voltage supply	Micro (2xAAA)
Dimensions (W x H x D)	85 x 106 x 21.5 mm
Color	Light white

Stock no.	Product no.
S55770-T276	**RDD100.1**

Room thermostats with LCD

RDD100.1-XA

- 2-position control with on / off positioning signal output for heating
- Operating modes: Normal operation and economy mode
- Automatic operating mode changeover as an option
- Color of housing front and baseplate: signal white RAL9003 (NCS S 0502-G)
- Blister packaging

Dimensions (W x H x D)	85 x 106 x 21.5 mm

Stock no.	Product no.
S55770-T337	**RDD100.1-XA**

RDE100..

Room thermostats with auto time switch and LCD

- 2-position control with on/off output for heating
- Operating modes: Normal and energy-saving mode
- Auto time switch (individual day, 7 day or 5-2 day) and manual operation
- Color of housing front and baseplate: signal white RAL9003 (NCS S 0502-G)

Setpoint setting range	5...35 °C
Switching differential	1 K
Degree of protection	IP30
Dimensions (W x H x D)	85 x 127 x 21.5 mm

RDE100

Room thermostat with auto time switch and LCD, AC 230 V

- 2-position control with on/off output for heating
- Operating modes: Normal and energy-saving mode
- Auto time switch (individual day, 7 day or 5-2 day) and manual operation
- Color of housing front and baseplate: signal white RAL9003 (NCS S 0502-G)

Data sheet	N1422
Operating voltage	AC 230 V
Relay output, switching voltage	AC 24...230 V
Relay output, switching current	5 (2)A
Relay outputs	Change-over contact Potential-free

Stock no.	Product no.
S55770-T278	**RDE100**

6

RDE100.1

Room thermostat with auto time switch and LCD, battery

- 2-position control with on/off output for heating
- Operating modes: Normal and energy-saving mode
- Auto time switch (individual day, 7 day or 5-2 day) and manual operation
- Color of housing front and baseplate: signal white RAL9003 (NCS S 0502-G)

Data sheet	N1422
Voltage supply	Micro (2xAAA)
Operating voltage	DC 3 V
Relay output, switching voltage	AC 24...230 V
Relay output, switching current	5 (2)A
Relay outputs	Change-over contact Potential-free

Stock no.	Product no.
S55770-T279	**RDE100.1**

RDE100.1DHW

Room thermostat with auto time switch and LCD, battery, independent DHW

- 2-position control with ON / OFF output for heating
- Independent ON / OFF control of DHW
- Operating modes: Auto, normal operation, energy saving and frost protection
- Auto time switch (individual day, 7 day or 5-2 day) and manual operation

Data sheet	N1423
Voltage supply	Micro (2xAAA)
Operating voltage	DC 3 V
Relay output, switching voltage	AC 24...230 V
Relay output, switching current	5 (2)A
Relay outputs	Change-over contact Potential-free

Stock no.	Product no.
S55770-T280	**RDE100.1DHW**

Room thermostats with auto time switch and LCD

RDE100.1-XA

- 2-position control with on/off output for heating
- Operating modes: Normal and energy-saving mode
- Auto time switch (individual day, 7 day or 5-2 day) and manual operation
- Color of housing front and baseplate: signal white RAL9003 (NCS S 0502-G)
- Blister packaging

Relay output, switching voltage	AC 24...230 V
Relay output, switching current	5 (2) A
Relay outputs	Change-over contact, potential-free

Stock no.	Product no.
S55770-T338	**RDE100.1-XA**

RDE100..RF..

Wireless room thermostat with auto timer

Battery-powered DC 3 V thermostat, with time switch, optional external input
- 2-position control with on / off output for heating
- Operating modes: Comfort, Economy, Auto timer and Protection mode
- Auto time switch
- Adjustable commissioning and control parameters
- Multifunction input for external floor sensor, keycard contact, etc.
- Color of housing front: signal white RAL9003 (NCS S 0502-G)

Setpoint setting range	5..35 °C
Switching differential	1 K
Radio frequency	433 MHz
Degree of protection	IP30

RDE100.1RF

Wireless room thermostat with auto timer

Battery-powered DC 3 V thermostat, with time switch, optional external input

Data sheet	CB1N1425
Voltage supply	Micro (2xAAA)
Operating voltage	DC 3 V
Relay output, switching voltage	230 V
Dimensions (W x H x D)	127 x 85 x 22 mm

Stock no.	Product no.
S55770-T320	**RDE100.1RF**

6

RDE100.1RFS

Wireless room thermostat with auto timer, incl. receiver

Battery-powered DC 3V thermostat with mains-powered AC 230 V receiver, with time switch, optional external input

Data sheet	CB1N1425
Voltage supply	Micro (2xAAA)
Operating voltage	DC 3 V
Relay output, switching voltage	AC 24...230 V
Relay output, switching current	8 (2) A
Relay outputs	Change-over contact Potential-free
Dimensions (W x H x D)	127 x 85 x 22 mm

Stock no.	Product no.
S55770-T282	**RDE100.1RFS**

RDE100.1RFS-XA

Wireless room thermostat with auto timer

Battery-powered DC 3 V thermostat, with time switch, optional external input
- 2-position control with on / off output for heating
- Operating modes: Comfort, Economy, Auto timer and Protection mode
- Auto time switch
- Adjustable commissioning and control parameters
- Multifunction input for external floor sensor, keycard contact, etc.
- Color of housing front: signal white RAL9003 (NCS S 0502-G)
- Blister packaging

Operating voltage	DC 3 V
Dimensions (W x H x D)	127 x 85 x 22 mm

Stock no.	Product no.
S55770-T346	**RDE100.1RFS-XA**

6

RDD100..RF..

Wireless room thermostat with LCD

Battery-powered DC 3 V thermostat, no time switch
- 2-position control with on / off control output
- Operating modes: Comfort, Economy and Protection mode
- Adjustable commissioning and control parameters
- Color of housing front: signal white RAL9003 (NCS S 0502-G)

Setpoint setting range	5...35 °C
Switching differential	1 K
Radio frequency	433 MHz
Degree of protection	IP30
Dimensions (W x H x D)	106 x 85 x 22 mm

RDD100.1RF

Wireless room thermostat with LCD

Battery-powered DC 3 V thermostat, no time switch

Data sheet	CB1N1424
Operating voltage	DC 3 V
Voltage supply	Micro (2xAAA)
Color	Light white

Stock no.	Product no.
S55770-T319	**RDD100.1RF**

6

Wireless accessory for RDD/E100

RDE-MZ6

Wireless Multizone Receiver

Mains-powered AC 230 V multizone receiver

Data sheet	CB1N1428
Operating voltage	AC 230 V
Power consumption	4 VA
Relay outputs	Change-over contact Potential-free
Relay outputs, number	6
Relay output, switching voltage	230 V
Relay output, switching current	8 (2) A
Radio frequency	433 MHz
Type of fixing	DIN rail wall mounting
Degree of protection	IP30
Dimensions (W x H x D)	280 x 76 x 36.5 mm
Color	Light white
Warranty	24 Months

Stock no.	Product no.
S55770-T285	**RDE-MZ6**

Room thermostat with 24-hour time switch

RAV11.1

- Mains-independent, electronic PID controller with 2-position output, battery-powered
- With analog 24-hour time switch
- Self-learning 2-position controller with PID control (patented)
- Color of housing front: signal white RAL9003 (NCS S 0502-G)
- Color of baseplate: light grey RAL7035 (NCS 2801-Y43R)

- Operating modes:
- 24-hour mode with heating periods according to the analog time switch
- Continuous Comfort mode
- Continuous Economy mode
- Stanby with frost protection

Operating voltage	DC 3 V
Voltage supply	Mignon (2xAA)
Setpoint setting range	5...30 °C
Relay outputs	Normally open contact Potential-free
Relay output, switching voltage	AC 24...250 V
Relay output, switching current	8 (3.5) A
Degree of protection	IP30
Dimensions (W x H x D)	128 x 104 x 37 mm
Warranty	24 Months

Stock no.	Product no.
BPZ:RAV11.1	**RAV11.1**

Flush mount touch screen room thermostat for heating (SPDT) with 2x universal input, fit for both round and square conduit boxes

RDD810

- Operating modes: Comfort, Economy and Protection
- Control output: changeover contact (SPDT)
- 2 multifunctional inputs for keycard contact, external room / return air temperature (QAH11.1, QAA32), window contact on/off, presence detector, fault contact, presence detector
- Adjustable commissioning and control parameters
- Minimum and maximum setpoint limitation
- Color of housing: Ivory white
- Backlit display

Operating voltage	AC 230 V
Power consumption	6 VA
Setpoint setting range	5...40 °C
Switching differential	0.5...6 K
Analog inputs, number	2
Relay outputs	Heating: contacts, floating
Relay outputs, number	1
Relay output, switching voltage	AC 24...230 V
Relay output, switching current	5 (2) A
Degree of protection	IP30
Dimensions (W x H x D)	82 x 82 x 47 mm
Warranty	24 Months

Stock no.	Product no.
S55770-T443	**RDD810**

Standalone room thermostats
Heating and/or cooling

RDE410/EH

Flush-mount room thermostats with auto timer

- Operating voltage AC 230 V
- 2-position control with On/Off control output
- Input for cable temperature sensor NTC 3k (QAP1030/UFH) for the floor
- Floor temperature limitation with cable temperature sensor
- Operating modes: Comfort, Energy Saving and Frost Protection
- Minimum and maximum setpoint setting range
- Backlit white LCD
- Protection class IP31, suitable for installation in wet rooms
- Auto Timer with 8 programmable time switches

Data sheet	N1440
Operating voltage	AC 230 V
Power consumption	4 VA
Setpoint setting range	5...40 °C
Digital output, switching voltage	230 V
Digital output, switching current	16 A
Degree of protection	IP31
Dimensions (W x H x D)	86 x 86 x 50 mm
Warranty	24 Months

	Stock no.	Product no.
	S55770-T333	**RDE410/EH**

Accessories for RDD310..

Product Title	Data sheet	Stock no.	Product no.
Cable temperature sensor PVC 4 m, NTC 3k	N1854	S55720-S289	**QAP1030/UFH**

6

RDD3.. Flush Mount

Flush-mount room thermostat with LCD

- Operating voltage AC 230 V
- 2-position control with On / Off control output
- Input for an external temperature sensor (QAH11.1 / QAA32)
- Temperature limitation function for heating, controlled by external temperature sensor (optional)
- Operating modes: Comfort, Energy Saving and Frost Protection
- Manual changeover of current operating mode
- Maximum and minimum setpoint limitation
- Backlit LCD
- Mounting on recessed rectangular conduit box, fixing center at 60.3mm (ARG71)

Range overview RDD3.. Flush Mount

Product Title	Operating voltage [V]	Color	Stock no.	Product no.
Flush-mount room thermostat for electric floor heating	AC 230	White	S55770-T296	**RDD310/EH**
Flush mount room thermostat for heating (SPDT) with no input, fit for square conduit boxes	AC 230	White	S55770-T358	**RDD310/MM**

Flush mount room thermostat for heating (SPDT), fit for square conduit boxes

RDD5.. Flush Mount

Heating/Cooling room thermostat
- Output for on/off valve actuator, 3-wire on/off valve
- Cooling only / Heating only
- Operation modes: Comfort and Protection
- Adjustable commissioning and control parameters
- Optional display of room temperature or setpoint
- Minimum and maximum setpoint limitation
- Display temperature in increments of 0.5 °C or °F
- Color of housing: signal white (RAL 9003)
- LED backlit display
- Full or partial keylock
- Internal sensor calibration
- Timer with delay off function: preset or user selection from 1 to 23 hours
- Return to previous mode or Protection (Off) mode upon power down

Range overview RDD5..Flush Mount

Product Title	Operating voltage [V]	Color	Stock no.	Product no.
Room thermostats in bulk pack of 20 units, white	AC 230	White	S55770-T425	**RDD510/BP**
Flush mount room thermostat for heating (SPDT), fit for square conduit boxes in bulk pack of 20 units, silver	AC 230	Silver	S55770-T432	**RDD510/BP.VS**

RAB..1..

Electromechanical room thermostats for fan coils

Electromechanical room temperature controllers for fan coil for heating and/or cooling applications. Manual three-speed fan control. The required room temperature is adjusted with the setpoint knob on the front of the unit.

- Gas-filled diaphragm
- 2-position control
- Color of housing front and baseplate: signal white RAL9003 (NCS S 0502-G)

Setpoint setting range	8...30 °C
Switching differential	≤1 K
Switching voltage	AC 24...250 V
Switching current	0.2...6 (2) A
Degree of protection	IP30

RAB11

Electromechanical room thermostat for 2-pipe fan coils, selector heating/cooling

- Heating or cooling applications
- Selector for heating or cooling mode
- Selector for manual 3-speed fan operation
- Manual fan operation or automatic fan operation parallel with the valve can be configured inside the unit

Data sheet	N3015
Operating voltage	AC 230 V
Dimensions (W x H x D)	99 x 110 x 35.3 mm

Stock no.	Product no.
S55770-T225	**RAB11**

RAB11.1

Electromechanical room thermostat for 2-pipe fan coils, selector heating/cooling/fan only

Same functionality and technical data as RAB11. Additional selector position for ventilation (heating and cooling inactive).

Data sheet	N3015
Operating voltage	AC 230 V
Dimensions (W x H x D)	99 x 110 x 35.3 mm

Stock no.	Product no.
S55770-T226	**RAB11.1**

RAB21

Electromechanical room thermostat for 2-pipe fan coils, basic model

- Heating or cooling applications
- Selector for manual 3-speed fan operation
- Changeover function, heating or cooling (with external automatic aquastat)
- Manual fan operation or automatic fan operation parallel with cooling / heating mode can be configured inside the unit

Data sheet	N3016
Operating voltage	AC 230 V
Dimensions (W x H x D)	99 x 110 x 35.3 mm
Color	Light white

Stock no.	Product no.
S55770-T227	**RAB21**

Electromechanical room thermostat for 4-pipe fan coils, selector heating/cooling

RAB31

- Heating or cooling applications
- Selector for heating or cooling mode
- Selector for 3-speed fan operation
- Manual fan operation or automatic fan operation parallel with heating / cooling mode (depending on the selector's position) can be configured inside the unit

Data sheet	N3017
Operating voltage	AC 230 V
Dimensions (W x H x D)	99 x 110 x 35.3 mm
Color	Light white

Stock no.	Product no.
S55770-T229	**RAB31**

Electromechanical room thermostat for 4-pipe fan coils, selector heating/cooling/fan only

RAB31.1

Same functionality and technical data as RAB31. Additional selector position for ventilation (heating and cooling inactive).

Data sheet	N3017
Operating voltage	AC 230 V
Dimensions (W x H x D)	99 x 110 x 35.3 mm
Color	Light white

Stock no.	Product no.
S55770-T230	**RAB31.1**

Fan speed switch, 3-stage

RAB91

Selector for 3-speed fan operation

Data sheet	N3018
Operating voltage	AC 230 V
Dimensions (W x H x D)	96 x 97 x 36 mm

Stock no.	Product no.
S55770-T231	**RAB91**

RCC..

Electronic room thermostats for fan coils

- For heating and cooling applications
- Operating mode selector
- LEDs for indicating the operating state
- Setting knob for room temperature adjustment
- External operating mode changeover contact
- Various operating modes (normal and energy saving mode, etc.)

Setpoint setting range	8...30 °C
Degree of protection	IP30

RCC10

Room thermostat for 2-pipe fan coils, AC 230 V, positioning signal 2 pt, return air sensor

- Heating or cooling sequence
- Automatic heating/cooling changeover (with sensor QAH11.1)
- Operating mode changeover input for remote control
- Outputs for 3-speed fan (0 / I / II / III)
- 2-position control
- Selectable switching differential (1 K heating, 0.5 K cooling, or 4 K heating, 2 K cooling)
- Input for return temperature sensor (QAH11.1)
- Frost protection mode

Data sheet	N3021
Operating voltage	AC 230 V
Relay output, switching voltage	230 V
Relay output, switching current	Fan: 0.1...2.6 A Valve: 0.1...1.3 A
Relay outputs	Fan: 3-position switch with normally open contacts Valve: Change-over contact Non floating
Dimensions (W x H x D)	97 x 114 x 43 mm

Stock no.	Product no.
BPZ:RCC10	**RCC10**

6

RCC20

Room thermostat for 2-pipe fan coils, AC 230 V, positioning signal 2 pt, return air sensor, el. heater

- Heating or cooling sequence
- Automatic heating/cooling changeover (with sensor QAH11.1)
- Operating mode changeover input for remote control
- Output for electrical heater
- 2-position control
- Selectable switching differential (1 K heating, 0.5 K cooling, or 4 K heating, 2 K cooling)
- Selectable dead zone (2 K or 5 K)
- Input for return air temperature sensor (QAH11.1)
- Frost protection mode
- Outputs for 3-speed fan (0 / I / II / III)

Data sheet	N3022
Operating voltage	AC 230 V
Relay output, switching voltage	230 V
Relay output, switching current	Fan: 0.1...2.6 A Valve: 0.1...1.3 A Electric heater: 0.1...5.4 A
Relay outputs	Fan: 3-position switch with normally open contacts Valve: Normally open contact Elctric heater: Normally open contact Non floating
Dimensions (W x H x D)	97 x 114 x 43 mm

	Stock no.	Product no.
	BPZ:RCC20	**RCC20**

RCC30

Room thermostat for 4-pipe fan coils, AC 230 V, positioning signal 2pt, return air sensor

- Heating and cooling sequence
- Operating mode changeover input for remote control
- 2-position control
- Selectable switching differential (1 K heating, 0.5 K cooling, or 4 K heating, 2 K cooling)
- Input for return air temperature sensor (QAH11.1)
- Frost protection mode
- Selectable dead zone (2 K or 5 K)
- Outputs for 3-speed fan (0 / I / II / III)

Data sheet	N3023
Operating voltage	AC 230 V
Relay output, switching voltage	230 V
Relay output, switching current	Fan: 0.1...2.6 A Valve: 0.1...1.3 A
Relay outputs	Fan: 3-position switch with normally open contacts Valve: Normally open contact Non floating
Dimensions (W x H x D)	96.6 x 114.15 x 42.8 mm

	Stock no.	Product no.
	BPZ:RCC30	**RCC30**

Accessories for RAB.. / RCC..

Product Title	Data sheet	Stock no.	Product no.
Mounting plate 120 x 120 mm for 4 x 4" housing	N3009	BPZ:ARG70	**ARG70**
Changeover cable holder for QAH11..	N3009	BPZ:ARG86.3	**ARG86.3**
Mounting plate 112 x 130 mm for surface wiring	N3009	BPZ:ARG70.2	**ARG70.2**
Cable temperature sensor PVC 2.5 m, NTC 3 kOhm, without connectors	N1840	BPZ:QAH11.1	**QAH11.1**

Application examples RAB..

These are only a few examples of many applications that can be done with the thermostat RAB...
More applications are described in “HIT” (the HVAC project engineering tool with a library of over 300 pre-configured HVAC-applications) and in the RAB.. data sheet.

RAB11

TAAE01 AB1 HQ

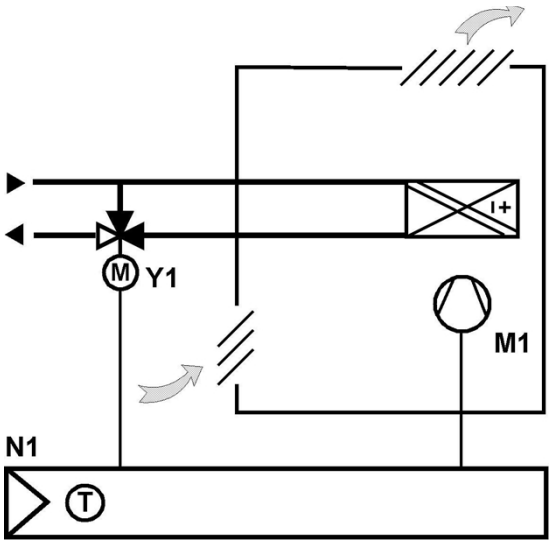

2-pipe fan coil, manual heating / cooling changeover

- 2-position control algorithm for heating or cooling systems
- Setting range of setpoint knob can be limited
- Operating mode selector for heating and cooling
- 4-position fan speed selector (I/II/III/off)

6

RAB21

TAAE01 AB2 HQ

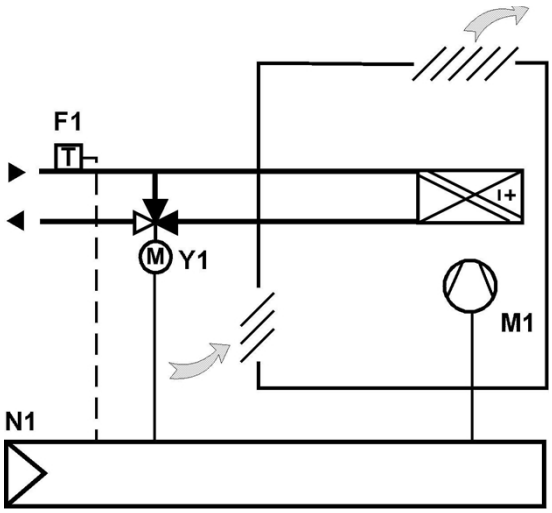

2-pipe fan coil, automatic heating / cooling changeover

- 2-position control for heating or cooling systems
- Setting range of setpoint knob can be limited
- 4-position fan speed selector (I/II/III/off)
- Heating/cooling changeover (aquastat)

Application examples RCC..

These are only a few examples of many applications that can be done with the thermostat RCC...
More applications are described in "HIT" (the HVAC project engineering tool with a library of over 300 pre-configured HVAC-applications) and in the RCC.. data sheet.

2-pipe fan coil, automatic heating / cooling changeover on/off output

RCC10

TAAE01 CC1 HQ

- 2-position control algorithm for heating or cooling systems
- Output for ON/OFF valve actuator
- 4-position fan speed selector (I/II/III/standby)
- Status LED for heating, cooling and fan
- Setting range of setpoint knob can be limited
- Parameter setting by installer for: Fan control, operating mode changeover operating mode switch condition, frost protection, switching differential for heating or cooling
- Automatic heating/cooling changeover with external temperature sensor (QAH11.1)
- Operating mode changeover for remote control with external switch
- Temperature control according to integrated sensor or external temperature sensor QAH11.1 or QAA32)

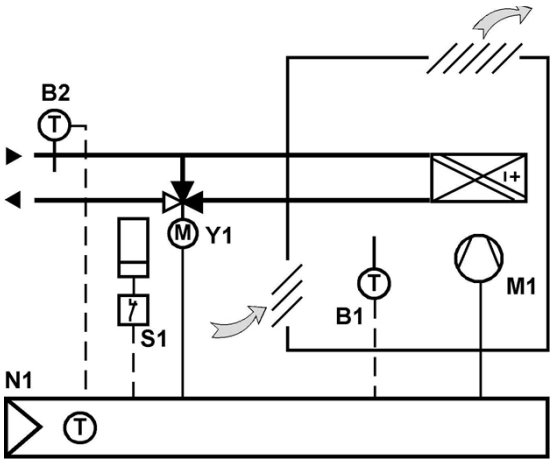

2-pipe fan coil, automatic heating / cooling changeover and electrical heater

RCC20

TAAZ01 CC2 HQ

- 2-position control algorithm for heating or cooling systems
- Outputs for ON/OFF valve actuator and electrical heater
- 4-position fan speed selector (I/II/III/standby)
- Status LED for heating, cooling and fan
- Setting range of setpoint knob can be limited
- Parameter setting by installer for: Fan control, operating mode changeover operating mode switch condition, frost protection, switching differential for heating or cooling, dead zone, setpoint differential, operation of electrical heater in cooling or heating mode
- Automatic heating/cooling changeover with external temperature sensor (QAH11.1)
- Operating mode changeover for remote control withexternal switch
- Temperature control according to integrated sensor or external temperature sensor (QAH11.1 or QAA32)

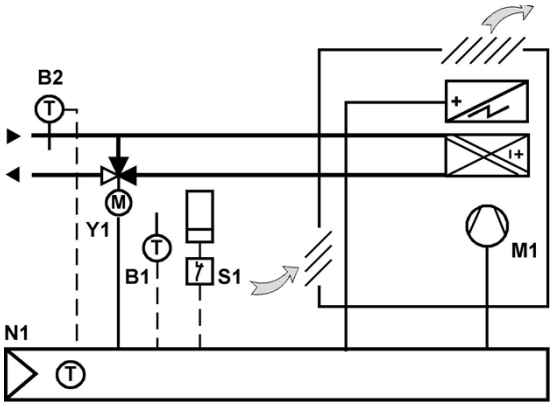

RDG1..

Room thermostats for fan coil units, universal applications and heat pump applications

Data sheet	N3181
Setpoint setting range	5...40 °C
Type of fixing	Wall mounting with screws
Degree of protection	IP30

RDG100

Room thermostat, AC 230 V, for fan coil units and universal applications

- Operating modes: Comfort, Energy Saving and Protection
- 2-position, 3-position or PWM control outputs
- Automatic or manual fan speed
- 3 multifunctional inputs for keycard contact, external room / return air temperature (QAH11.1, QAA32), heat / cool changeover, operation mode changeover, window contact on/off, dewpoint monitor, electrical heater enabled, fault contact
- Automatic or manual heating / cooling changeover
- Adjustable commissioning and control parameters
- Minimum and maximum setpoint limitation
- Backlit display

Application selectable:
- 2-pipe system
- 2-pipe system with electrical heater
- 2-pipe system and radiator / floor heating
- 4-pipe system
- 4-pipe system with electrical heater
- 2-stage heating or cooling system

Data sheet	N3181
Operating voltage	AC 230 V
Relay outputs, number	3
Relay outputs	Fan: 1- or 3-speed
Relay output, switching voltage	230 V
Relay output, switching current	5 (4) A
Triac outputs, number	3
Triac outputs	Valve, el. heater 2-position, PWM, 3-position
Triac output, switching voltage	230 V
Triac output, switching current	1 A
Switching differential	Heating: 0.5...6 K; Cooling: 0.5...6 K
Analog inputs, number	2
Digital inputs, number	1
Dimensions (W x H x D)	93 x 128 x 30.8 mm

Stock no.	Product no.
S55770-T158	**RDG100**

Room thermostat, AC 230 V, for fan coil units and heat pump applications

RDG110

- Operating modes: Comfort, Energy Saving and Protection
- 2-position control outputs
- Automatic or manual fan speed
- 3 multifunctional inputs for keycard contact, external room / return air temperature (QAH11.1, QAA32), heat / cool changeover, operation mode changeover, window contact on/off, dewpoint monitor, electrical heater enabled, fault contact
- Automatic or manual heating / cooling changeover
- Adjustable commissioning and control parameters
- Minimum and maximum setpoint limitation
- Backlit display

Application selectable:
- 2-pipe system
- 2-pipe system with electrical heater
- 2-pipe system and radiator / floor heating
- 4-pipe system
- 2-stage heating or cooling system

Data sheet	N3181
Operating voltage	AC 230 V
Relay outputs, number	5
Relay outputs	Valve, compressor or el. heater: 2 outputs (SPDT), 2-position Fan: 1- or 3-speed
Relay output, switching voltage	230 V
Relay output, switching current	Valve, compressor or el. heater: 5 (3) A Fan: 5 (4) A
Switching differential	Heating: 0.5...6 K; Cooling: 0.5...6 K
Analog inputs, number	2
Digital inputs, number	1
Dimensions (W x H x D)	93 x 128 x 30.8 mm

Stock no.	Product no.
S55770-T160	**RDG110**

6

RDG1..0T..

Room thermostat for fan coil units and universal applications, 7-day time switch

Data sheet	N3181
Setpoint setting range	5...40 °C
Type of fixing	Wall mounting with screws
Degree of protection	IP30

RDG100T

Room thermostat, AC 230 V, for fan coil units and universal applications, 7-day time switch, vertical

- Operating modes: Auto timer, Comfort, Energy Saving and Protection
- Auto Timer mode with 8 programmable timers
- 2-position, 3-position or PWM control outputs
- Automatic or manual fan speed for 1-speed or 3-speed fan
- 3 multifunctional inputs for keycard contact, external room / return air temperature (QAH11.1, QAA32), heat / cool changeover, operation mode changeover, window contact on/off, dewpoint monitor, electrical heater enabled, fault contact
- Automatic or manual heating / cooling changeover
- Adjustable commissioning and control parameters
- Minimum and maximum setpoint limitation
- Infrared remote control receiver
- Backlit display
- Auto timer can be disabled

Application selectable:
- 2-pipe system
- 2-pipe system with electrical heater
- 2-pipe system and radiator / floor heating
- 4-pipe system
- 4-pipe system with electrical heater
- 2-stage heating or cooling system

Data sheet	N3181
Operating voltage	AC 230 V
Switching differential	Heating: 0.5...6 K; Cooling: 0.5...6 K
Analog inputs, number	2
Analog input, signal	NTC 3k Switch
Relay outputs, number	3
Relay outputs	Fan: 1- or 3-speed
Relay output, switching voltage	230 V
Relay output, switching current	5 (4) A
Triac outputs, number	3
Triac output, switching current	1 A
Triac outputs	Valve, el. heater 2-position, PWM, 3-position
Triac output, switching voltage	230 V
Dimensions (W x H x D)	93 x 128 x 30.8 mm

Stock no.	Product no.
S55770-T159	**RDG100T**

Room thermostat, AC 24 V, for fan coil units (3-speed or ECM fan), universal applications and heat pump applications. 7-day time switch. Outputs DC 0..10V or ON/OFF

RDG160T

- Operating modes: Auto timer, Comfort, Energy Saving and Protection
- Auto Timer mode with 8 programmable timers
- 2-position or DC 0...10V control outputs
- ECM fan or 3-speed fan outputs
- Automatic or manual fan speed
- 3 multifunctional inputs for keycard contact, external room / return air temperature (QAH11.1, QAA32), heat / cool changeover, operation mode changeover, window contact on/off, dewpoint monitor, electrical heater enabled, fault contact, supply air temperature sensor
- Automatic or manual heating / cooling changeover
- Adjustable commissioning and control parameters
- Minimum and maximum setpoint limitation
- Infrared remote control receiver
- Backlit display
- Auto timer can be disabled

Application selectable:
- 2-pipe system
- 2-pipe system with electrical heater
- 2-pipe system and radiator / floor heating
- 4-pipe system
- 2-stage heating or cooling system

Data sheet	N3181
Operating voltage	AC/DC 24 V DC 24 V
Switching differential	Heating: 0.5...6 K; Cooling: 0.5...6 K
Analog inputs, number	2
Analog input, signal	NTC 3k Switch
Relay outputs, number	3
Relay outputs	Fan: 1- or 3-speed Valve: Normally open contact Elctric heater: Normally open contact
Relay output, switching voltage	AC 24...230 V
Relay output, switching current	5 (4)A
Analog outputs	Valve, el. heater: 2 Fan: 1 (ECM)
Analog output, signal	DC 0...10 V
Analog output, current	Heater:1 mA Valve:1 mA Fan:5 mA
Dimensions (W x H x D)	93 x 128 x 30.8 mm

	Stock no.	Product no.
	S55770-T343	**RDG160T**

Accessories for RDG.. / RDF..

Product Title	Data sheet	Stock no.	Product no.
Mounting plate 112 x 130 mm for surface wiring	N3009	BPZ:ARG70.2	**ARG70.2**
Cable temperature sensor PVC 2.5 m, NTC 3 kOhm, without connectors	N1840	BPZ:QAH11.1	**QAH11.1**
Infrared Remote Control for room thermostats	N3060	S55770-T166	**IRA211**

RDG2..

Room thermostats RDG2..

- Built-in temperature sensor
- 3 multifunctional inputs for keycard contact, external room / return air temperature (NTC3K; QAH11.1, QAA32 or LG-Ni1000 sensors), heat / cool changeover, operation mode changeover, window contact on/off, dewpoint monitor, electrical heater enabled, fault contact, presence detector
- Operating modes: Comfort, Economy and Protection
- Automatic or manual DC fan or 1-/3-speed
- Automatic or manual heating / cooling changeover
- Adjustable commissioning and control parameters
- Commissioning via Siemens smartphone application PCT Go
- Commissioning via local HMI
- Power reserve clock for 20 h during power failure
- Minimum and maximum setpoint limitation
- Backlit display

Data sheet	A6V13375643
Setpoint setting range	5...40 °C
Analog inputs, number	3
Digital inputs, number	3
Relay outputs	Fan 1- or 3-speed
Relay outputs, number	3
Type of fixing	Wall mounting with screws

Range overview RDG2..

Operating voltage	Color	Stock no.	Product no.
AC 230 V	White	S55770-T457	RDG200T
AC/DC	White	S55770-T458	RDG260T

6

Flush mount touch screen room thermostat for 2-/4-pipe FCU with on/off outputs, 2x universal input and electrical heater application, fit for both round and square conduit boxes

RDF8..Flush Mount

- Operating modes: Comfort, Economy and Protection
- For heating and/or cooling applications
- 2 or 3-position control outputs
- Output for 1-speed or 3-speed fan
- 2 multifunctional inputs for keycard contact, external room / return air temperature (QAH11.1, QAA32), heat / cool changeover, window contact on/off, dewpoint monitor, electrical heater enabled, fault contact, presence detector
- Automatic or manual heating/cooling changeover
- Adjustable commissioning and control parameters
- Minimum and maximum setpoint limitation
- Color of housing: Ivory white
- Backlit display

Application selectable:
- 2-pipe system
- 2-pipe system with electrical heater
- 4-pipe system

Data sheet	N3174
Power consumption	6 VA
Setpoint setting range	5...40 °C
Switching differential	0.5...6 K
Analog inputs, number	2
Relay outputs	Fan: N.O. contacts, non-floating Valve: N.O. contacts, non-floating
Relay outputs, number	5
Relay output, switching voltage	AC 230 V
Relay output, switching current	5 (2) A
Degree of protection	IP30
Dimensions (W x H x D)	86 x 86 x 47 mm

6

Range overview RDF8..Flush Mount

Product Title	Operating voltage [V]	Stock no.	Product no.
Flush mount touch room thermostat for 2-/4-pipe FCU with on/off output and 2x universal input, fit for both round and square conduit boxes	AC 230	S55770-T396	**RDF800**
Flush mount touch room thermostat for 2-/4-pipe FCU with on/off output and 2x universal input, fit for both round and square conduit boxes, black color	AC 230	S55770-T451	**RDF800/VB**

RDF6..Flush Mount

Flush-mount room thermostats for both round and square conduit boxes, with backlit LCD

Flush-mount room thermostat for round conduit box with LCD
- Output for 1-speed or 3-speed fan
- 2 or 3-position control outputs
- Two multifunctional inputs for keycard contact, external room / return air temperature (QAH11.1, QAA32), heat / cool changeover, operation mode changeover, window contact on/off, dewpoint monitor, electrical heater enabled, fault contact
- Operating modes: Comfort, Energy Saving and Protection
- Automatic or manual heating/cooling changeover
- Adjustable commissioning and control parameters
- Minimum and maximum setpoint limitation
- Color of housing: signal white (RAL 9003)
- Backlit display

Application selectable:
- 2-pipe system
- 2-pipe system with electrical heater
- 4-pipe system

Operating voltage	AC 230 V
Switching differential	0.5...6 K
Analog inputs, number	2
Relay outputs, number	5
Type of fixing	Recessed round conduit box diameter min. 60 mm
Dimensions (W x H x D)	86 x 86 x 46 mm

6

Range overview RDF6..Flush Mount

Product Title	Color	Stock no.	Product no.
Flush mount room thermostat for 2-/4-pipe FCU with on/off valves, ECM fan, 7-day time switch, infrared remote control and 2x universal input, fit for both round and square conduit boxes	White	S55770-T434	**RDF660T**
Flush mount room thermostat for 2-/4-pipe FCU with on/off output and 2x universal input, fit for both round and square conduit boxes		S55770-T291	**RDF600**
Flush mount room thermostat for 2-/4-pipe FCU with on/off output , time programs and 2x universal input, fit for both round and square conduit boxes, infrared remote control, 7-day time switch, backlit LCD		S55770-T292	**RDF600T**

Flush-mount room thermostats for square conduit boxes

RDF5..Flush Mount

Flush-mount thermostats
- Output for on/off valve actuator, 3-wire on/off valve
- 3-speed fan control: Automatic or manual
- Manual heating / cooling changeover or continuous Cooling only / Heating only
- Operation modes: Comfort and Protection
- Adjustable commissioning and control parameters
- Optional display of room temperature or setpoint
- Minimum and maximum setpoint limitation
- Display temperature in increments of 0.5 °C or °F
- Color of housing: signal white (RAL 9003)
- LED backlit display
- Full or partial keylock
- Internal sensor calibration
- Timer with delay off function: preset or user selection from 1 to 23 hours
- Return to previous mode or Protection (Off) mode upon power down
- Fan speed low or off in deadzone
- Fan minimum On-time
- Three standard color housings on bulk pack for project delivery
- Customization is also available by request

- LED backlit display
- Keylock function
- Display either room temperature or setpoint
- Comfort and Protection(Off) operating modes
- Automatic or manual heating/cooling changeover
- Automatic or manual 3-speed fan control
- Selectable fan operation in deadzone
- Timer with delay Off function: preset or user selection from 1 to 23 hours
- Minimum and maximum setpoint limitation
- Return to previous operating mode or Protection(Off) upon power down
- Internal sensor calibration
- Adjustable commissioning and control parameters
- Fit into 86x86 conduit boxes
- Housing available in different colors

Data sheet	A6V10889950
Operating voltage	AC 230 V
Power consumption	Max. 12 VA
Setpoint setting range	5...40 °C
Switching differential	0.5...6 K (factory setting: 1 K)
Dimensions (W x H x D)	86 x 86 x 39 mm

Range overview RDF5..Flush Mount

Product Title	Stock no.	Product no.
Flush mount room thermostat for 2-pipe FCU with on/off output, fit for square conduit boxes	S55770-T382	**RDF510**
Flush mount room thermostat for 2-pipe FCU with on/off output, fit for square conduit boxes in bulk pack of 20 units	S55770-T383	**RDF510/BP**
Flush mount room thermostat for 2-pipe FCU with on/off output, fit for square conduit boxes in bulk pack of 20 units, silver	S55770-T403	**RDF510/BP.VS**
Flush mount room thermostat for 2-pipe FCU with on/off output, fit for square conduit boxes in bulk pack of 20 units, black	S55770-T404	**RDF510/BP.VB**
Flush mount room thermostat for 2-pipe FCU with on/off output, fit for square conduit boxes in bulk pack of 20 units, gold	S55770-T405	**RDF510/BP.VG**
Flush mount room thermostat for 4-pipe fan coils	S55770-T384	**RDF530**
Flush mount room thermostat for 4-pipe FCU with on/off output, fit for square conduit boxes in bulk pack of 20 units	S55770-T385	**RDF530/BP**

Range overview RDF5..Flush Mount

Product Title	Stock no.	Product no.
Flush mount room thermostat for 4-pipe FCU with on/off output, fit for square conduit boxes in bulk pack of 20 units, black	S55770-T417	**RDF530/BP.VB**
Flush mount room thermostat for 4-pipe FCU with on/off output, fit for square conduit boxes in bulk pack of 20 units, gold	S55770-T424	**RDF530/BP.VG**
Flush mount room thermostat for 4-pipe FCU with on/off output, fit for square conduit boxes in bulk pack of 20 units, silver	S55770-T423	**RDF530/BP.VS**

Flush-mount room thermostat

RDF..Flush Mount

Flush-mount room thermostat with LCD for 2-/4-pipe fan coil units and compressors in DX-type equipment
- For heating and/or cooling applications
- Outputs for 3-speed fan
- Selectable installation and control parameters

Setpoint setting range	5...40 °C
Degree of protection	IP30

Range overview RDF..Flush Mount

Product Title	Operating voltage [V]	Color	Stock no.	Product no.
Flush mount room thermostat for 2-/4-pipe FCU with on/off output and 2x universal input, fit for square conduit boxes	AC 230		BPZ:RDF300.02	**RDF300.02**
Flush mount room thermostat for 2-/4-pipe FCU with on/off output and 2x universal input, fit for square conduit boxes, black	AC 230	Black	S55770-T427	**RDF300.02/VB**
Flush mount room thermostat for 2-pipe FCU with on/off output, fit for square conduit boxes	AC 230		S55770-T187	**RDF310.2/MM**
Flush mount room thermostat for 2-/4-pipe FCU with DC valves, 3-speed fan and 2x universal input, fit for square conduit boxes	AC 24		BPZ:RDF340	**RDF340**

Accessories for RDF..

Product Title	Data sheet	Stock no.	Product no.
Mounting bracket 10 mm thick	N3009	BPZ:ARG70.3	**ARG70.3**
Hotel Key Card ARG810.1		S55770-T446	**ARG810.1**
Door Bell with DND ARG820.1		S55770-T447	**ARG820.1**
Door Bell with DND & MUR ARG830.1		S55770-T448	**ARG830.1**
Cable temperature sensor PVC 2.5 m, NTC 3 kOhm, without connectors	N1840	BPZ:QAH11.1	**QAH11.1**
Infrared Remote Control for room thermostats	N3060	S55770-T166	**IRA211**
Room temperature sensor NTC 3 kOhm	N1747	BPZ:QAA32	**QAA32**

Electronic room thermostat for VAV and CAV systems

RCU..VAV

- Electronic room thermostat for heating and cooling operation
- P control
- Color of housing front: signal white RAL9003 (NCS S 0502-G)
- Color of baseplate: light grey RAL7035 (NCS 2801-Y43R)

Power consumption	6 VA
Setpoint setting range	8...30 °C
Analog output, signal	DC 0...10 V
Analog output, current	Max. ±1 mA
Type of fixing	Wall mounting with screw
Degree of protection	IP30
Dimensions (W x H x D)	97 x 114 x 43 mm

Room thermostat for VAV and CAV systems, AC 24 V, positioning signal DC 0...10 V, manual changeover heating/cooling/off

RCU50.2

- Manual heating / cooling changeover and OFF position
- Normal operation and OFF mode
- Signal inversion of output signal
- Fixed values for proportional band

Data sheet	N3045
Operating voltage	AC 24 V

Stock no.	Product no.
BPZ:RCU50.2	**RCU50.2**

6

RDU340

Flush-mount room thermostat for rectangular conduit box with LCD for VAV application

- Output for a DC 0...10 V actuator and AC 230V electrical heater (ON-OFF)
- 2 multifunctional inputs for keycard contact, external room / return air temperature (QAH11.1, QAA32), heat / cool changeover, operation mode changeover, window contact on/off, dewpoint monitor, electrical heater enabled, fault contact
- Operating modes: Comfort, Energy Saving and Protection
- Modulating PI control
- Control depending on the room or the return air temperature
- Automatic or manual heating/cooling changeover
- Adjustable commissioning and control parameters
- Minimum and maximum setpoint limitation
- Adjustable minimum and maximum limitation for air flow signal DC 0...10V
- Output signal inversion as an option
- Mounting on recessed rectangular conduit box, 60.3 mm fixing centers
- Color of housing: signal white (RAL 9003)

Application selectable:
- Single-duct system
- Single-duct system with electrical heater

Data sheet	N3078
Operating voltage	AC 24 V
Power consumption	6 VA
Setpoint setting range	5...40 °C
Analog inputs, number	2
Analog outputs	VAV actuator
Analog outputs, number	1
Analog output, signal	DC 0...10 V
Analog output, current	1 mA
Relay outputs	Normally open contact Potential-free
Relay outputs, number	1
Relay output, switching voltage	230 V
Relay output, switching current	5 (2) A
Type of fixing	Recessed rectangular conduit box BS4662 with fixing centres of 60.3 mm
Degree of protection	IP30
Color	White
Dimensions (W x H x D)	86 x 86 x 57 mm
Warranty	24 Months

	Stock no.	Product no.
	BPZ:RDU340	**RDU340**

Accessories for RDU3.. flush mount

Product Title	Data sheet	Stock no.	Product no.
Mounting bracket 10 mm thick	N3009	BPZ:ARG70.3	**ARG70.3**
Flush-mount room thermostat for rectangular conduit box with LCD for VAV application	N3078	BPZ:RDU340	**RDU340**

Room thermostat, AC 24 V, VAV heating and cooling systems

RDG400

- Output DC 0...10 V for VAV actuator and auxiliary output ON/OFF, PWM or 3-position or 3-position for VAV actuator and auxiliary output DC 0...10 V
- 3 multifunctional inputs for keycard contact, external room / return air temperature (1x, QAH11.1, QAA32), heat / cool changeover, operation mode changeover, window contact on/off, dewpoint monitor, electrical heater enabled, fault contact
- Operating modes: Comfort, Energy Saving and Protection
- Modulating PI control
- Control depending on the room or the return air temperature
- Automatic or manual heating / cooling changeover
- Adjustable commissioning and control parameters
- Minimum and maximum setpoint limitation
- Minimum and maximum limitation of air flow signal
- Output signal inversion (DC 0...10 V) as an option
- Backlit display

Application selectable:
- Single-duct system
- Single-duct system with electrical heater
- Single-duct system and radiator / floor heating
- Single-duct system with heating / cooling coil

Data sheet	N3182
Operating voltage	AC 24 V
Power consumption	2 VA
Setpoint setting range	5...40 °C
Switching differential	Heating: 0.5...6 K; Cooling: 0.5...6 K
Analog inputs, number	2
Analog outputs	VAV actuator, electric heater, valve
Analog outputs, number	1
Analog output, signal	DC 0...10 V
Analog output, current	1 mA
Digital inputs, number	1
Triac outputs	VAV actuator, valve, el. heater 2-position, PWM, 3-position
Triac outputs, number	1
Triac output, switching voltage	24 V
Triac output, switching current	1 A
Type of fixing	Wall mounting with screws
Degree of protection	IP30
Dimensions (W x H x D)	93 x 128 x 30.8 mm
Warranty	24 Months

Stock no.	Product no.
S55770-T164	**RDG400**

Application examples RDG..

More applications are described in “HIT“ (the HVAC project engineering tool with a library of over 300 pre-configured HVAC-applications) and in the RDG.. data sheet

RDG400

TCCE01 DG4 HQ

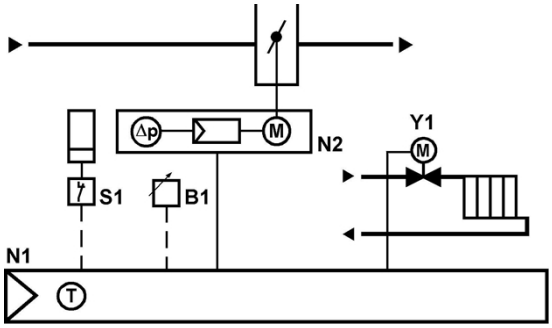

VAV box, automatic heating/cooling changeover with radiator, mod. PI-control, DC 0...10 V for cooling

- Modulating PI control algorithm for heating and cooling systems
- Outputs for DC 0...10 V and ON/OFF, PWM, 3-postion
- Setting range of setpoint knob can be limited
- Manual operating mode button
- Parameter setting by installer
- Temperature control according to integrated sensor
- Adjustable minimum limitation of cooling output (air flow)
- Operating mode changeover for remote control with external switch/sensor
- Operating voltage AC 24 V
- Backlit display

RTU/HP Room Thermostat

RDY2000

- Controls conventional systems with up to 3 stages heating and 3 stages cooling
- Controls heat pumps with 1 or 2 compressors and up to 2 stages of auxiliary heat
- Backlit 5-inch LCD touch screen
- On-board temperature and humidity sensor
- Multiple configurable inputs and outputs enable advanced control strategies
- Seven-day (2- or 4-event) occupancy scheduling

Operating voltage	AC 24 V
Dimensions (W x H x D)	152.4 x 152.4 x 7.9 mm
Warranty	24 Months

	Stock no.	Product no.
	S55770-T339	**RDY2000**

6

ARG70

Mounting plate 120 x 120 mm for 4 x 4" housing

Accessories for use with room thermostats RAA.., RAB.., RCC.., RCU.., RDD.., RDE.., RDF..

Data sheet	N3009
Dimensions (W x H x D)	120 x 120 x 6 mm
Warranty	24 Months

Stock no.	Product no.
BPZ:ARG70	**ARG70**

ARG86.3

Changeover cable holder for QAH11..

Changeover mounting kit for QAH11.. sensor for universal use as a strap-on sensor

Data sheet	N3009
Packaging unit	10 pieces
Warranty	60 Months

Stock no.	Product no.
BPZ:ARG86.3	**ARG86.3**

6

QAP1030/UFH

Cable temperature sensor PVC 4 m, NTC 3k

Data sheet	N1854
Measuring range, temperature	-20...70 °C
Sensing element, temperature	NTC 3k
Measurement accuracy	At -20...70 °C: ±0.3 K
Time constant	1.5 min to air
Protection pocket	Non
Material, protection pocket	None
Cable length	4 m
Warranty	60 Months

Stock no.	Product no.
S55720-S289	**QAP1030/UFH**

ARG70.2

Mounting plate 112 x 130 mm for surface wiring

Accessories for use with room thermostats RAA.., RAB.., RCC.., RCU.., RDD.., RDE.., RDF..

Data sheet	N3009
Dimensions (W x H x D)	112 x 130 x 10 mm
Warranty	24 Months

Stock no.	Product no.
BPZ:ARG70.2	**ARG70.2**

Cable temperature sensor PVC 2.5 m, NTC 3 kOhm, without connectors

QAH11.1

For installation in fan coil units as
- a return air temperature sensor
- a changeover sensor

Packing size: 10 pcs

Data sheet	N1840
Measuring range	For fixed cable
Sensing element	NTC 3k
Measuring range, temperature	-20...70 °C
Sensing element, temperature	NTC 3k
Time constant	Air v=0 m/s: 90 s
Connection cable	2-wire Ferrules
Cable length	2.5 m
Warranty	60 Months

Stock no.	Product no.
BPZ:QAH11.1	**QAH11.1**

Room temperature sensor NTC 3 kOhm

QAA32

Data sheet	N1747
Sensing element	NTC 3k
Measuring range, temperature	0...40 °C
Sensing element, temperature	NTC 3k
Time constant	360 s
Measurement accuracy	25 °C: ±0.3 K
Connection, electrical	Screw terminals
Degree of protection	IP30
Dimensions (W x H x D)	97 x 100 x 36 mm
Warranty	60 Months

Stock no.	Product no.
BPZ:QAA32	**QAA32**

RAK-TR.1..H

Temperature controller

External scale, 1 changeover contact, immersion and strap-on thermostat in one.

Data sheet	N1205
Switching differential	6 K
Digital output, switching voltage	AC 24...250 V
Digital output, switching current	0.1...16 (2.5) A
Digital outputs	1-pin Potential-free Changeover contact
Degree of protection	IP43
Dimensions (W x H x D)	55 x 156 x 72 mm

Range overview RAK-TR.1..H

Operating voltage [V]	Setpoint setting range [°C]	Protection pocket [LW7]	Capillary length [mm]	Stock no.	Product no.
AC 24	15...95	PN 10, 100 mm, G ½"	700	S55700-P111	**RAK-TR.1000B-H**
	15...95		700	S55700-P112	**RAK-TR.1000S-H**
	15...82	PN 10, 100 mm, G ½"	700	S55700-P113	**RAK-TR.1210B-H**

Note to protection pocket: Brass, nickel-plated.

RAK-TW.1..H

Thermal reset limit thermostat

Internal scale, 1 changeover contact, immersion and strap-on thermostat in one.

Data sheet	N1202
Switching differential	6 K
Digital output, switching voltage	AC 24...250 V
Digital output, switching current	Contact 1-2: 0.1...16 (2.5) A Contact 1-3: 0.1...6 (2.5) A
Digital outputs	1-pin Potential-free Changeover contact
Degree of protection	IP43
Dimensions (W x H x D)	55 x 156 x 64 mm

Range overview RAK-TW.1..H

Setpoint setting range [°C]	Protection pocket [LW7]	Capillary length [mm]	Stock no.	Product no.
15...95		700	S55700-P116	**RAK-TW.1000S-H**
40...120	PN 10, 100 mm, G ½"	700	S55700-P117	**RAK-TW.1200B-H**
40...120		700	S55700-P119	**RAK-TW.1200S-H**

Note to protection pocket: Brass, nickel-plated.

Thermal reset limit thermostat

RAK-TW.1..H..

Immersion, strap-on and remote thermostat in one

Data sheet	N1202
Switching differential	6 K
Digital output, switching voltage	AC 24...250 V
Digital output, switching current	Contact connection 1-2: 0.1...16 (2.5) A Contact connection 1-3: 0.1...6(2.5) A
Digital outputs	1-pole Potential-free Changeover contact
Degree of protection	IP65
Dimensions (W x H x D)	55 x 156 x 64 mm

Range overview RAK-TW.1..H..

Setpoint setting range [°C]	Protection pocket [LW7]	Capillary length [mm]	Stock no.	Product no.
15...95	PN 10, 100 mm, G½"	700	S55700-P115	**RAK-TW.1000HB**
40...120	PN 10, 100 mm, G½"	700	S55700-P118	**RAK-TW.1200HP**

Note to protection pocket: Brass, nickel-plated.

Temperature limiter

RAK-TB.1..M

Internal scale, 1 changeover contact, immersion and strap-on thermostat in one.

Data sheet	N1206
Reset temperature	Min. 15 K under the switch-off point
Digital output, switching voltage	AC 24...250 V
Digital output, switching current	Contact 11-12: 0.1...16 (2.5) A Contact 11-13: 2 (0.4) A
Digital outputs	1-pin Potential-free Switchover contact
Degree of protection	IP43
Dimensions (W x H x D)	55 x 156 x 67 mm

Range overview RAK-TB.1..M

Switch-off point [°C]	Protection pocket [LW7]	Capillary length [mm]	Stock no.	Product no.
45...60		700	S55700-P108	**RAK-TB.1400S-M**
50...70	PN 10, 100 mm, G½"	700	S55700-P109	**RAK-TB.1410B-M**
65...80		700	S55700-P110	**RAK-TB.1420S-M**

Note to protection pocket: Brass, nickel-plated.

RAK-ST..M

Safety limit thermostat

Internal scale, 1 changeover contact, failsafe capillary, immersion and strap-on thermostat in one, with ambient temperature compensation.

Data sheet	N1204
Reset temperature	Min. 15 K under the switch-off point
Digital output, switching voltage	AC 24...250 V
Digital output, switching current	Contact 11-12: 0.1...16 (2.5) A Contact 11-13: 2 (0.4) A
Digital outputs	1-pin Potential-free Switchover contact
Degree of protection	IP43
Dimensions (W x H x D)	55 x 156 x 67 mm

Range overview RAK-ST..M

Switch-off point [°C]	Protection pocket [LW7]	Capillary length [mm]	Stock no.	Product no.
95	PN 10, 100 mm, G ½"	700	S55700-P100	**RAK-ST.010FP-M**
100	PN 10, 100 mm, G ½"	700	S55700-P101	**RAK-ST.020FP-M**
110	PN 10, 100 mm, G ½"	700	S55700-P102	**RAK-ST.030FP-M**
110...130	PN 10, 100 mm, G ½"	700	S55700-P103	**RAK-ST.1300P-M**
90...110	PN 10, 100 mm, G ½"	700	S55700-P104	**RAK-ST.1310P-M**
80...100		1600	S55700-P106	**RAK-ST.1430S-M**

Note to protection pocket: Brass, nickel-plated.

6

RAK-ST.1..M..

Safety limit thermostat

Immersion, strap-on and remote thermostat in one

Data sheet	N1204
Reset temperature	~7 K under the switch-off point
Digital output, switching voltage	AC 24...250 V
Digital output, switching current	Contact 11-12: 16 (2,5) A Contact 11-13: 2 (0,4) A
Digital outputs	1-pole Potential-free Changeover contact
Degree of protection	IP65
Dimensions (W x H x D)	55 x 156 x 67 mm

Range overview RAK-ST.1..M..

Switch-off point [°C]	Protection pocket	Capillary length [mm]	Stock no.	Product no.
40...70		700	S55700-P105	**RAK-ST.1385M**
95...130	100 mm; G ½"; 7 mm; PN10	700	S55700-P107	**RAK-ST.1600MP**

Note to protection pocket: Brass, nickel-plated.

Thermal reset limit thermostat for air ducts, 20...110 °C; perforated protection pocket 200mm

TKM2

Data sheet	N1291
Setpoint setting range	20...110 °C
Switching differential	2 K
Digital output, switching voltage	AC 250 V
Digital output, switching current	0.2...10 (2) A
Ambient temperature head	Max. 100 °C
Digital outputs	1-pin Potential-free Changover contact
Degree of protection	IP54
Dimensions (W x H x D)	60 x 120 x 55 mm
Warranty	24 Months

Stock no.	Product no.
BPZ:TKM2	**TKM2**

6

RAZ-TW.1..J

Temperature controller/ thermal reset limit thermostat

Combination of control thermostat (TR) and thermal reset limit thermostat (TW). Inernal scale (TR), internal scale (TW), 2 changeover contacts. Immersion thermostat and wall mounting.

Data sheet	N1212
Immersion length	100 mm
Reset temperature	Min. 15 Kelvin under the switch-off point
Switching differential	6 K
Digital output, switching voltage	AC 24...250 V
Digital output, switching current	0.1...16 (4) A
Digital outputs	1-pin Potential-free Changeover contact
Degree of protection	IP40
Dimensions (W x H x D)	120 x 106 x 70 mm

Range overview RAZ-TW.1..J

Setpoint setting range [°C]	Protection pocket [LW7]	Capillary length [mm]	Stock no.	Product no.
TR: 15...95 TW: 15...95	PN 10, 100 mm, G ½" 2x	700	S55700-P140	**RAZ-TW.1000P-J**
TR: 40...120 TW: 40...120	PN 10, 100 mm, G ½" 2x	700	S55700-P141	**RAZ-TW.1200P-J**

Double protection pocket 2x inner dia.7mm, brass nickel plated.

Temperature controller/ safety limit thermostat

RAZ-ST..J

Combination of control thermostat (TR) and safety limit thermostat (STB). Internal scale (TR), internal scale (STB), 2 changeover contacts, failsafe capillary, STB with ambient temperature compensation. Immersion thermostat and wall mounting.

Data sheet	N1214
Immersion length	100 mm
Capillary length	700 mm
Reset temperature	Min. 20 Kelvin under the switch-off point
Switching differential	TR: 6 K STB: ±5 K
Digital output, switching voltage	AC 24...250 V
Digital output, switching current	TR: 0.1...16 (4) A STB: Contact 1-2 0.1...16 (1) A Contact 1-4 max. 0.5 A (alarm contact)
Digital outputs	1-pin Potential-free Changeover contact
Degree of protection	IP40
Dimensions (W x H x D)	120 x 106 x 70 mm

Range overview RAZ-ST..J

Setpoint setting range [°C]	Switch-off point [°C]	Protection pocket [LW7]	Stock no.	Product no.
15...95 100	100	PN 10, 100 mm, G ½"	S55700-P136	**RAZ-ST.011FP-J**
15...95 110	110	PN 10, 100 mm, G ½"	S55700-P137	**RAZ-ST.030FP-J**
TR: 15...95 STB: 110...130	110...130	PN 10, 100 mm, G ½"	S55700-P138	**RAZ-ST.1500P-J**
15...95 90...110	90...110	PN 10, 100 mm, G ½"	S55700-P139	**RAZ-ST.1510P-J**

Double protection pocket 2x inner dia.7mm, brass nickel plated.

Strap-on temperature controller, 20...90 °C, fixing spring, setpoint adjuster externally

RAM-TR.2000M

Electromechanical temperature control (TR) with single-pole changeover microswitch:
- Set point externally adjustable
- Controlled medium: water, oil

Data sheet	N1198
Setpoint setting range	20...90 °C
Sensing element	Bimetall
Digital output, switching voltage	AC 24...250 V
Digital output, switching current	0.2...16 A
Digital outputs	1-pin Potential-free Changeover contact
Degree of protection	IP20
Dimensions (W x H x D)	38 x 105 x 42 mm
Warranty	24 Months

Stock no.	Product no.
BPZ:RAM-TR.2000M	**RAM-TR.2000M**

RAM-TW.2000M

Strap-on temperature limitation, 20...90 °C, fixing spring, setpoint adjuster internally

Electromechanical temperature limitation (TW) with single-pole changeover microswitch:
- Set point internally adjustable
- Controlled medium: water, oil

Data sheet	N1198
Setpoint setting range	20...90 °C
Sensing element	Bimetall
Digital output, switching voltage	AC 24...250 V
Digital output, switching current	0.2...16 A
Digital outputs	1-pin Potential-free Changeover contact
Degree of protection	IP20
Dimensions (W x H x D)	38 x 105 x 42 mm
Warranty	24 Months

Stock no.	Product no.
BPZ:RAM-TW.2000M	**RAM-TW.2000M**

Protection pockets for RAK-T and RAK-S

Packaging unit	Protection pocket [LW7]	Material	PN class	Data sheet	Stock no.	Product no.
1 pc	100 mm, G½"	Brass, nickel-plated	PN 10	N1194	BPZ:ALT-SB100	**ALT-SB100**
1 pc	150 mm, G½"	Brass, nickel-plated	PN 10	N1194	BPZ:ALT-SB150	**ALT-SB150**
1 pc	200 mm, G½"	Brass, nickel-plated	PN 10	N1194	BPZ:ALT-SB200	**ALT-SB200**
1 pc	280 mm, G½"	Brass, nickel-plated	PN 10	N1194	BPZ:ALT-SB280	**ALT-SB280**
1 pc	100 mm; G ½";	Stainless steel V4A	PN 16	N1194	BPZ:ALT-SS100	**ALT-SS100**
1 pc	150 mm, G½"	Stainless steel V4A	PN 16	N1194	BPZ:ALT-SS150	**ALT-SS150**
1 pc	280 mm, G½"	Stainless steel V4A	PN 16	N1194	BPZ:ALT-SS280	**ALT-SS280**
1 pc	450 mm, G½"	Stainless steel V4A	PN 16	N1194	BPZ:ALT-SS450	**ALT-SS450**
1 pc	100 mm, G½" (with flange)	Stainless steel V4A	PN 40	N1194	BPZ:ALT-SSF100	**ALT-SSF100**
1 pc	150 mm, G½" (with flange)	Stainless steel V4A	PN 40	N1194	BPZ:ALT-SSF150	**ALT-SSF150**
1 pc	200 mm, G½" (with flange)	Stainless steel V4A	PN 40	N1194	BPZ:ALT-SSF200	**ALT-SSF200**
1 pc	280 mm, G½" (with flange)	Stainless steel V4A	PN 40	N1194	BPZ:ALT-SSF280	**ALT-SSF280**
1 pc	450 mm, G½" (with flange)	Stainless steel V4A	PN 40	N1194	BPZ:ALT-SSF450	**ALT-SSF450**
1 pc	600 mm, G½" (with flange)	Stainless steel V4A	PN 40	N1194	BPZ:ALT-SSF600	**ALT-SSF600**

Accessories for RAZ-T.., RAZ-S.. and RAK..

Product Title	Material	PN class	Data sheet	Stock no.	Product no.
Mounting kit for RAK../RAZ..			N1193	BPZ:ALT-C001	**ALT-C001**
Protection pocket, 100 mm, MS63 nickel-plated, G½", PN10, 2xLW7	Brass, nickel-plated	PN 10	N1194	S55700-P142	**ALT-DB100J**
Protection pocket, 150 mm, MS63 nickel-plated, G½", PN10, 2xLW7	Brass, nickel-plated	PN 10	N1194	S55700-P143	**ALT-DB150J**
Protection pocket, 280 mm, MS63 nickel-plated, G½", PN10, 2xLW7	Brass, nickel-plated	PN 10	N1194	S55700-P144	**ALT-DB280J**
Protection pocket, 450 mm, MS63 nickel-plated, G½", PN10, 2xLW7	Brass, nickel-plated	PN 10	N1194	S55700-P145	**ALT-DB450J**

Accessories for RAZ-T.., RAZ-S.. and RAK..

Product Title	Material	PN class	Data sheet	Stock no.	Product no.
Protection pocket, 100 mm, stainless steel V4A, G½" LW15	Stainless steel V4A	PN 16	N1194	S55700-P146	**ALT-DS100J**
Protection pocket, 150 mm, stainless steel V4A, G½" LW15	Stainless steel V4A	PN 16	N1194	S55700-P147	**ALT-DS150J**
Protection pocket, 280 mm, stainless steel V4A, G½" LW15	Stainless steel V4A	PN 16	N1194	S55700-P148	**ALT-DS280J**
Protection pocket, 450 mm, stainless steel V4A, G½" LW15	Stainless steel V4A	PN 16	N1194	S55700-P149	**ALT-DS450J**

Accessories for RAK-T and RAK-S

Product Title	Packaging unit	Material	Data sheet	Stock no.	Product no.
Protection pocket, perforated, 200 mm	1 pc	Steel, galvanized	N1193	BPZ:ALT-AB200	**ALT-AB200**
Mounting kit for RAK../RAZ..	1 bag		N1193	BPZ:ALT-C001	**ALT-C001**
Mounting flange, adjustable depth	1 pcs.	PA66GF35	N1193	BPZ:AQM63.0	**AQM63.0**
3 capillary supports and 3 spacers for QAF.. Mounting			N1821	BPZ:AQM63.2	**AQM63.2**
Terminal housing	1 box		N1207	S55700-P131	**RAK-H-M**

QAF63..J

Frost detector, modulating

- For fitting to the air duct
- Fully active capillary tube sensor
- With capillary tube entry

In addition to direct mounting, the frost sensor can be fitted to the air duct using the AQM63.0 snap-on mounting flange (accessory).

Data sheet	A6V10432020
Operating voltage	AC 24 V
Power consumption	5 VA
Min. active length	250 mm
Measuring range, temperature	0...15 °C
Ambient temperature, operation	-15...60 °C
Connection cable	3-wire
Analog output, signal	DC 0...10 V
Degree of protection	IP42
Dimensions (W x H x D)	96 x 136 x 67 mm

Range overview QAF63..J

Capillary length [mm]	Stock no.	Product no.
2000	S55700-P153	**QAF63.2-J**
6000	S55700-P154	**QAF63.6-J**

6

QAF65.3AR-J

Frost monitor, 2-point, capillary tube 3000 mm, -10...+15 °C

Monitoring of the temperature in ventilation and air conditioning plants to prevent damage from frost. Capillary tube for fitting on air heating coils

Factory setup 5 °C

Data sheet	A6V12051788
Operating voltage	AC 250 V
Setpoint setting range	-10...15 °C
Sensing element, temperature	Liquid expansion sensor
Capillary length	3000 mm
Switching differential	2 K
Digital output, switching voltage	AC 24...250 V
Digital output, switching current	Contact 1-2: 0.1...16 (4)A; Contact 1-4 (STB, Alarm contact): 0.1...16 (4) A
Digital outputs	Switchover contact
Degree of protection	IP65
Dimensions (W x H x D)	53 x 150 x 64 mm
Color	Gray
Warranty	24 Months

Stock no.	Product no.
S55700-P163	**QAF65.3AR-J**

Frost monitor, 2-point, capillary tube 6000 mm, -10...+15 °C

QAF65.6AR-J

Monitoring of the temperature in ventilation and air conditioning plants to prevent damage from frost. Capillary tube for fitting on air heating coils

Factory setup 5 °C

Data sheet	A6V12051788
Operating voltage	AC 250 V
Setpoint setting range	-10...15 °C
Sensing element, temperature	Liquid expansion sensor
Capillary length	6000 mm
Switching differential	2 K
Digital output, switching voltage	AC 24...250 V
Digital output, switching current	Contact 1-2: 0.1...16 (4)A; Contact 1-4 (STB, Alarm contact): 0.1...16 (4) A
Digital outputs	Switchover contact
Degree of protection	IP65
Dimensions (W x H x D)	53 x 150 x 64 mm
Color	Gray
Warranty	24 Months

	Stock no.	Product no.
	S55700-P164	**QAF65.6AR-J**

6

QAF64..J

Frost detector, air side, 2-point

- Modulating and 2-position
- Fully active capillary type sensing element
- Indication of frost with red LED
- Test switch for simulation of frost
- Selector for automatic or manual reset function
- Modulating P-controller for startup
- Limit value contact for plant control

In addition to direct mounting, the frost monitor can be fitted to the air duct using the AQM63.0 snap-on mounting flange (accessory).

Data sheet	A6V10432022
Operating voltage	AC 24 V
Power consumption	6.6 VA
Min. active length	250 mm
Setpoint setting range	1...10 °C
Measuring range, temperature	0...15 °C
Ambient temperature, operation	-15...55 °C
Connection cable	6 (8)-wire
Digital output, switching voltage	DC 5 V / AC 5...250 V
Digital output, switching current	6 (4) A
Analog inputs	Control input
Analog output, signal	DC 0...10 V
Digital outputs	Potential-free Switchover contact
Degree of protection	IP42
Dimensions (W x H x D)	96 x 136 x 67 mm

6

Range overview QAF64..J

Capillary length [mm]	Stock no.	Product no.
2000	S55700-P155	**QAF64.2-J**
6000	S55700-P156	**QAF64.6-J**

QAF65.3M-J

Frost monitor, 2-point, capillary tube 3000 mm, -10...+15 °C, Reset button

Internal scale, 1 changeover contact, capillary tube for fitting on air heating coils

Factory setup 5 °C

Data sheet	A6V11965899
Operating voltage	AC 250 V
Setpoint setting range	-10...15 °C
Sensing element, temperature	Liquid expansion sensor
Capillary length	3000 mm
Switching differential	2 K
Digital output, switching voltage	AC 24...250 V
Digital output, switching current	Contact 1-2: 0.1...16 (4)A; Contact 1-4 (STB, Alarm contact): 0.1...16 (4) A
Digital outputs	Switchover contact
Degree of protection	IP65
Dimensions (W x H x D)	53 x 150 x 64 mm
Color	Gray
Warranty	24 Months

	Stock no.	Product no.
	S55700-P161	**QAF65.3M-J**

Accessories for QAF63.. and QAF64..

Product Title	Data sheet	Stock no.	Product no.
Mounting flange, adjustable depth	N1193	BPZ:AQM63.0	**AQM63.0**
3 capillary supports and 3 spacers for QAF.. Mounting	N1821	BPZ:AQM63.2	**AQM63.2**

Capillary and clamp-on thermostats
Frost protection units

QAF81..

Frost monitor, 2-point

For temperature supervision on the air side of air heating coils in ventilation and air conditioning plants to provide protection against frost.

Data sheet	N1284
Setpoint setting range	-5...+15 °C
Min. active length	300 mm
Switching differential	2 K
Digital output, switching voltage	AC 250 V
Digital output, switching current	10 (2) A
Mounting position	Any
Digital outputs	1-pin Potential-free Switchover contact
Degree of protection	IP54
Dimensions (W x H x D)	106 x 113 x 37 mm

Range overview QAF81.

Capillary length [mm]	Stock no.	Product no.
3000	BPZ:QAF81.3	**QAF81.3**
6000	BPZ:QAF81.6	**QAF81.6**
6000	BPZ:QAF81.6M	**QAF81.6M**

6

QAF65.6M-J

Frost monitor, 2-point, capillary tube 6000 mm, -10...+15 °C, Reset button

Internal scale, 1 changeover contact, capillary tube for fitting on air heating coils

Factory setup 5 °C

Data sheet	A6V11965899
Operating voltage	AC 250 V
Setpoint setting range	-10...15 °C
Sensing element, temperature	Liquid expansion sensor
Capillary length	6000 mm
Switching differential	2 K
Digital output, switching voltage	AC 24...250 V
Digital output, switching current	Contact 1-2: 0.1...16 (4)A; Contact 1-4 (STB, Alarm contact): 0.1...16 (4) A
Digital outputs	Switchover contact
Degree of protection	IP65
Dimensions (W x H x D)	53 x 150 x 64 mm
Color	Gray
Warranty	24 Months

Stock no.	Product no.
S55700-P162	**QAF65.6M-J**

Accessories for QAF81..

Product Title	Data sheet	Stock no.	Product no.
Set of 6 capillary supports	N1284	BPZ:FK-TZ1	**FK-TZ1**
6 Capillary tube clamps for QAF../QAM.. mounting	N1284	BPZ:AQM63.3	**AQM63.3**

Frost protection monitor

RAK-TW.5..H

Internal scale, 1 changeover contact, immersion and strap-on thermostat in one.

Perforated protection pocket must be ordered as a separate item: ALT-AB200

Data sheet	N1203
Switching differential	5 K
Digital output, switching voltage	AC 24...250 V
Digital output, switching current	Contact 1-2: 0.1...16 (2.5) A Contact 1-3: 0.1...6 (2.5) A
Digital outputs	1-pin Potential-free Switching contact
Degree of protection	IP43
Dimensions (W x H x D)	55 x 156 x 64 mm

Range overview RAK-TW.5..H

Setpoint setting range [°C]	Capillary length [mm]	Stock no.	Product no.
5...65	1600	S55700-P121	**RAK-TW.5000S-H**
-10...50	1600	S55700-P122	**RAK-TW.5010S-H**

Frost protection monitor

RAK-TW.5..H..

Immersion, strap-on and remote thermostat in one

Perforated protection pocket must be ordered as a separate item: ALT-AB200

Data sheet	N1203
Switching differential	5 K
Digital output, switching voltage	AC 24...250 V
Digital output, switching current	Contact connection 1-2: 0.1...16 (2.5) A Contact connection 1-3: 0.1...6 (2.5) A
Digital outputs	1-pole Potential-free Changeover contact
Degree of protection	IP65
Dimensions (W x H x D)	55 x 156 x 64 mm

Range overview RAK-TW.5..H..

Setpoint setting range [°C]	Capillary length [mm]	Stock no.	Product no.
5...65	1600	S55700-P120	**RAK-TW.5000HS**

Accessories for RAK-TW.5.. and RAK-TW.5..H..

Product Title	Data sheet	Stock no.	Product no.
Protection pocket, perforated, 200 mm	N1193	BPZ:ALT-AB200	**ALT-AB200**

TRG2

Room thermostat with helix sensor, TR -5..50 °C

For commercial and industrial applications.

Data sheet	N1329
Operating voltage	AC 250 V
Setpoint setting range	-5...50 °C
Connection cable	2-wire
Switching differential	0.7...6 K; adjustable
Digital output, switching voltage	250 V
Digital output, switching current	0.2...10 (2)A
Digital outputs	CO: 1 Potential-free
Relay outputs	Change-over contact
Relay outputs, number	1
Mounting position	Horizontal
Degree of protection	IP54
Dimensions (W x H x D)	98 x 95 x 63 mm
Color	Gray
Warranty	24 Months

Stock no.	Product no.
BPZ:TRG2	**TRG2**

TRG22

Room thermostat with helix sensor, TR -5..50 °C, 2 switches on 2 steps 2..12 K difference

For commercial and industrial applications.

Note on switching interval:
Adjustable temperature difference between step 1 and step 2.

Data sheet	N1329
Operating voltage	AC 250 V
Setpoint setting range	-5...50 °C
Switching differential	2 K
Switching interval	2...12 K
Digital outputs	CO: 2 Potential-free
Relay outputs	Change-over contact
Mounting position	Horizontal
Degree of protection	IP54
Color	Gray
Dimensions (W x H x D)	98 x 135 x 67 mm
Warranty	24 Months

Stock no.	Product no.
BPZ:TRG22	**TRG22**

Sensors

Overview and selection tools		310
Temperature	Room sensors - wall mounted QAA..	313
	Room sensors - flush mounted AQR25..	317
	Duct sensors QAM.. / FK-TP..	319
	Immersion sensors QAE.. / FT-TP..	321
	Strap-on sensors QAD..	327
	Outside sensors QAC..	328
	Window pan and flue gas sensors: QAT.. / FGT..	329
	Cable sensors QAP.. / QAZ.. / QAH..	330
Humidity and temperature	Room sensors QFA..	332
	Room sensors - flush mounted AQR25..	337
	Room hygrostats: QFA..	339
	Duct sensors QFM..	340
	Duct hygrostats QFM..	343
	Condensation monitor QXA..	344
Air quality	Room sensor QPA..	345
	Room sensor flush mounted AQR25..	348
	Duct sensor QPM..	352
	Room sensor fine dust QSA..	354
	Duct sensor fine dust QSM..	355
	IAQ multi-sensor QNA...	356
Pressure	Differential pressure sensor air and non-aggressive gas QBM..	357
	Differential pressure monitor QBM..	364
	Pressure sensors for liquids and gases QBE..	365
	Pressure sensors refrigerant QBE..	372
Flow	Flow switch QVE..	374
	Duct sensors QVM..	376
Solar sensors		377

Overview sensors

Temperature

Model		Room sensors	Duct sensors	Immersion sensors	Outside sensors		Strap-on sensors	Cable sensors
Type reference		QAA	QAM	QAE	QAC	QAC	QAD	QAP
Category:	Standard	■	■	■	■		■	■
	High Quality					■		

Humidity

Model		Room sensors				Duct sensors			Outside sensors
Type reference		QFA	QFA..D	QFA	QFA..D	QFM	QFM	QFM..D	QFA
Category	Basic					■			
	Standard	■	■			■			
	High Quality			■	■		■	■	■
	Certified			■	■		■		

Air quality

Model		Room sensors				Air duct sensors		
Type reference		QNA2...	QPA1..	QPA2..	QPA..D	QPM1..	QPM2..	QPM..D
Measured value	VOC	■	■			■		
	VOC / T					■		
	VOC / H / T					■		
	CO_2	■	■	■		■	■	
	CO_2 / VOC			■	■		■	■
	CO_2 / T		■	■	■	■	■	■
	CO_2 / H / T			■	■		■	■
	CO_2 / VOC / H / T						■	
	CO2,/VOC/H/T/PM2.5/dBA/lux	■						
Display		■			■			■
Category	Basic		■			■		
	Standard			■	■		■	■

Fine dust

Model		Room sensors		Air duct sensors
Type reference		QSA..	QSA..D	QSM..
Measured value	PM2.5	■	■	■
	PM2.5 / H / T			■

Pressure

Model		Differential pressure sensors			Absolute pressure sensors			Differential pressure sensors	Pressure switches
Medium		Air	Air	Liquids / gases	Liquids / gases	Refrigeration	Liquids / gases		
Type reference		QBM2x	QBM3../4..	QBE6x	QBE2x03-P	QBE2x04-P	QBE3x00-D	QBM81-x	QBE1900-Px
Category	Standard	■		■	■	■			
	High Quality		■				■		
	Certified		■						
Display			■						

Flow

Model		Flow switch			Air velocity sensor
Medium		Liquids	Liquids	Liquids	Air
Type reference		QVE1900	QVE1901	QVE1902	QVM62.1-HE
Category	Basic	■	■	■	
	Standard				■
	High Quality				

Xtra

Model		Solar sensors	Flue gas temperature sensors
Type reference		QLS60	FGT-PT1000
Medium			Air
Measured value		Intensity of radiation	Flue gas temperature
Category	Standard	■	
	High Quality		■

New: 5-year warranty on valves and actuators, damper actuators, and sensors.

7

Overview module combinations – room sensors for flush mounting

Active sensors			Measuring variables					Display	Selection tool controller range						
Basic module	+	Front module	CO_2	VOC	Relative humid-ity	Active temp.	Passive temp.	CO_2 -indicator	Desigo PX	RXL	RXB	RXC	RVL4, RVP3	Synco 200	Synco 700
AQR2540Nx	+	AQR2532NNW				■			■					■	■
AQR2540Nx	+	AQR2535NNW			■	■			■					■	■
AQR2546Nx	+	AQR2530NNW	■						■					■	■
AQR2546Nx	+	AQR2532NNW	■			■			■					■	■
AQR2546Nx	+	AQR2535NNW	■		■	■ [2]			■					■	■
AQR2546Nx	+	AQR2535NNWQ	■		■	■ [2]		■	■					■	■
AQR2547Nx	+	AQR2530NNW		■					■					■	■
AQR2547Nx	+	AQR2532NNW		■		■			■					■	■
AQR2547Nx	+	AQR2535NNW		■	■	■ [2]			■					■	■
AQR2548Nx	+	AQR2530NNW	■	■ [1]					■					■	■
AQR2548Nx	+	AQR2532NNW	■	■ [1][2]		■			■					■	■
AQR2548Nx	+	AQR2535NNW	■	■ [1][2]	■	■ [2]			■					■	■
AQR2548Nx	+	AQR2535NNWQ	■	■ [1][2]	■	■ [2]		■	■					■	■

For passive sensors see page 6-4

[1] Here, the in-door air quality is calculated from the CO_2 and VOC measuring variables. VOC is not available as direct measuring variable.

[2] The measuring variable is solely available as switch output.

Overview and selection tools

Passive sensors			Measuring variables					Selection tool controller range						
Mounting plate	+	Front module	CO_2	VOC	Relative humidity	Active temp.	Passive temp.	Desigo PX	RXL	RXB	RXC	RVL4, RVP3	Synco 200	Synco 700
AQR2500Nx	+	AQR2531ANW					LG-Ni1000	■	■	■	■	■	■	■

Replace x with:
– **F** for VDE/CEE (70x70 mm)
– **G** for Italian Standard 3 modular (110x64 mm)
– **J** for UL Standard 2" x 4" (64x110 mm)

Power supply: AC 24 V, DC 15...36 V
Signal range active sensor: DC 0...5 V, DC 2...10 V, DC 0...10 V, DC 0...20 mA, DC 4...20 mA, and DC 0...10 mA
A freely selectable switching contact is available for every measuring variable.

Communicating sensors			Measuring variables			Display	Inputs	
Base modul	+	Front module	CO_2	Relative humidity	Temperature	CO_2-indicator	Passive temperature NTC 10k	Two potential-free contacts
AQR2570Nx	+	AQR2532NNW			■		■	■
AQR2570Nx	+	AQR2535NNW		■	■		■	■
AQR2576Nx	+	AQR2530NNW	■				■	■
AQR2576Nx	+	AQR2532NNW	■		■		■	■
AQR2576Nx	+	AQR2535NNW	■	■	■		■	■
AQR2576Nx	+	AQR2535NNWQ	■	■	■	■	■	■

Replace x with:
– F for VDE/CEE (70x70 mm)
– **H** for British Standard (83x83 mm)
– **G** for Italian Standard 3 modular (110x64 mm)
– **J** for UL Standard 2" x 4" (64x110 mm)

The room sensors are KNX certified and can be used in conjunction with all devices capable of communicating over KNX.

Furthermore the sensors can be used with the following Siemens building automation systems:
– Desigo TRA (PL-Link)
– Synco 700 (KNX LTE-Mode)
– GAMMA (KNX S-Mode)

Room temperature sensor, passive

QAA2..

Measuring range, temperature	0...50 °C
Connection, electrical	Screw terminals
Degree of protection	IP30
Dimensions (W x H x D)	90 x 100 x 32 mm
Warranty	60 Months

Range overview QAA2..

Sensing element, temperature	Time constant	Measurement accuracy [K]	Stock no.	Product no.
LG-Ni1000	420 s	At 0...50 °C: ±0.8	BPZ:QAA24	**QAA24**
Pt100	420 s	At 0...50 °C: ±0.6	BPZ:QAA2010	**QAA2010**
Pt1000	420 s	At 0...50 °C: ±0.6	BPZ:QAA2012	**QAA2012**
NTC 10k	7 min	At 0...50 °C: ±0.8	BPZ:QAA2030	**QAA2030**

Wireless room sensor, KNX IoT/Thread, Temperature

QAA2890/WI

Wireless room sensor for temperature
- Wirless communication via KNX IoT over Thread
- Measurement accuracy up to ± 0.3 °C
- More than 10 years battery lifetime (under normal operating conditions)
- Dimensions: 88 x 88 x 14 mm

Data sheet	A6V12871702
Battery life	Up to 10 years (under normal operating conditions with 10 minutes wake-up cycle)
Power consumption	Max. 20 mA
Measuring range, temperature	0...50 °C
Time constant	Temperature: ≤ 8.5 min (depending on air movement and thermal coupling to the wall)
Measurement accuracy	Temperature at 21...25 °C: ±0.3 K Temperature at 15...21 °C/25...35 °C: ±0.7 K Temperature at 0...15 °C/35...50 °C: ±1 K
Communication	2400...2483.5 MHz
Indoor wireless range	50 m
Display	no display
Color	White
Degree of protection	IP30
Dimensions (W x H x D)	88 x 88 x 14 mm
Warranty	60 Months

	Stock no.	Product no.
	S55720-S550	QAA2890/WI

7

New Product

QAA25

Room unit with room temperature sensor and setpoint adjuster

For Synco™ and Desigo™ PX applications

Data sheet	N1721
Sensing element	LG-Ni1000
Setpoint setting range	5...35 °C
Measuring range, temperature	0...50 °C
Sensing element, temperature	LG-Ni1000
Time constant	420 s
Connection, electrical	Screw terminals
Degree of protection	IP30
Dimensions (W x H x D)	90 x 100 x 36 mm
Warranty	60 Months

Stock no.	Product no.
BPZ:QAA25	**QAA25**

QAA26

Room unit with room temperature sensor and setpoint adjuster 5..30 °C

For Desigo™ PX applications

Data sheet	N1721
Time constant	420 s
Sensing element	LG-Ni1000
Setpoint setting range	5...30 °C
Measuring range, temperature	0...50 °C
Sensing element, temperature	LG-Ni1000
Degree of protection	IP30
Dimensions (W x H x D)	90 x 100 x 36 mm
Warranty	60 Months

Stock no.	Product no.
BPZ:QAA26	**QAA26**

7

QAA27

Room unit with room temperature sensor and setpoint readjuster -3...3 K

For Synco™ and Desigo™ PX applications

Data sheet	N1721
Sensing element	LG-Ni1000
Setpoint readjustment range	-3...3 K
Measuring range, temperature	0...50 °C
Sensing element, temperature	LG-Ni1000
Time constant	420 s
Connection, electrical	Screw terminals
Degree of protection	IP30
Dimensions (W x H x D)	90 x 100 x 36 mm
Warranty	60 Months

Stock no.	Product no.
BPZ:QAA27	**QAA27**

Room temperature sensors, active

QAA20..1

Data sheet	N1749
Measuring range, temperature	0...50 °C
Time constant	7 min
Measurement accuracy	at AC 24 V in the range of -25 °C...+25 °C ± 0.75 K -50 °C...+50 °C ±0.9 K
Connection, electrical	Screw terminals
Degree of protection	IP30
Dimensions (W x H x D)	90 x 100 x 36 mm
Warranty	60 Months

Range overview QAA20..1

Analog output, signal	Operating voltage [V]	Display	Stock no.	Product no.
DC 0...10 V	AC 24 DC 13.5...35		BPZ:QAA2061	**QAA2061**
DC 0...10 V	AC 24 DC 13.5...35	LCD	BPZ:QAA2061D	**QAA2061D**
DC 4...20 mA	DC 13.5...35		BPZ:QAA2071	**QAA2071**

Room temperature sensor LG-Ni1000 for mounting on recessed conduit boxes

QAA64

For mounting on recessed conduit boxes.
Not suited for cooling in VAV installations.

Data sheet	N1722
Sensing element	LG-Ni1000
Measuring range, temperature	0...50 °C
Sensing element, temperature	LG-Ni1000
Time constant	390 s
Measurement accuracy	At 0...50 °C: ±0.8 K
Connection, electrical	Screw terminals
Degree of protection	IP40
Dimensions (W x H x D)	84 x 84 x 25 mm
Warranty	60 Months

Stock no.	Product no.
BPZ:QAA64	**QAA64**

Room temperature sensor NTC 3 kOhm

QAA32

Data sheet	N1747
Sensing element	NTC 3k
Measuring range, temperature	0...40 °C
Sensing element, temperature	NTC 3k
Time constant	360 s
Measurement accuracy	25 °C: ±0.3 K
Connection, electrical	Screw terminals
Degree of protection	IP30
Dimensions (W x H x D)	97 x 100 x 36 mm
Warranty	60 Months

Stock no.	Product no.
BPZ:QAA32	**QAA32**

Accessories for QAA32

Product Title	Data sheet	Stock no.	Product no.
Mounting plate 120 x 120 mm for 4 x 4" housing	N3009	BPZ:ARG70	**ARG70**

Front modules for base module

AQR253..

- Front module with sensors

Data sheet	N1411
Color	Titanium white
Degree of protection	IP30
Warranty	60 Months

Range overview AQR253..

Measuring range, temperature [°C]	Signal output temperature	Measurement range humidity [% r.h.]	Display	Dimensions (WxHxD) [mm]	Stock no.	Product no.
0...50	Active LG-Ni1000	0...100		55 x 55 x 12	S55720-S138	**AQR2534ANW**
				55 x 55 x 12	S55720-S137	**AQR2530NNW**
0...50	Active			55 x 55 x 12	S55720-S136	**AQR2532NNW**
0...50	Active	0...100		55 x 55 x 12	S55720-S141	**AQR2535NNW**
0...50	Active	0...100	CO_2 indicator by LED	55 x 55 x 38	S55720-S219	**AQR2535NNWQ**

The matching design frame must be ordered separately.

Frames for front modules AQR253..

Product Title	Data sheet	Stock no.	Product no.
Frame DELTA line for front module	N1410	S55720-S158	**AQR2510NFW**
Frame DELTA azio for front module	N1410	S55720-S160	**AQR2510NGW**
Frame DELTA miro for front module	N1410	S55720-S159	**AQR2510NHW**

Front modules with passiv temperature measurement

AQR2531..

Front module with passiv sensor.

Data sheet	N1408
Measuring range, temperature	0...50 °C
Connection, electrical	Screw terminals
Color	Titanium white
Degree of protection	IP30
Warranty	60 Months

Range overview AQR2531..

Sensing element, temperature	Dimensions (WxHxD) [mm]	Stock no.	Product no.
LG-Ni1000	55 x 55 x 38.5	S55720-S133	**AQR2531ANW**

Mounting plates for front modules AQR2531..

Product Title	Data sheet	Stock no.	Product no.
Mounting plate EU (CEE/VDE)	N1408	S55720-S161	**AQR2500NF**
Mounting plate IT (3 modular)	N1408	S55720-S163	**AQR2500NG**

AQR2540..

Base modules for temperature and humidity measurement

- Base module without sensor for plugging onto a front module

Data sheet	N1410
Operating voltage	AC 24 V DC 15...36 V
Connection, electrical	Screw terminals
Analog output, signal	DC 0...10 V DC 2...10 V DC 0...5 V DC 0...20 mA DC 4...20 mA DC 0...10 mA
Digital outputs	CO: 1 Potential-free
Warranty	60 Months

Range overview AQR2540..

Mechanical design	Dimensions (WxHxD) [mm]	Stock no.	Product no.
EU (CEE/VDE)	71 x 71 x 45	S55720-S142	**AQR2540NF**
IT (3 modular)	71 x 71 x 45	S55720-S144	**AQR2540NG**
UK (British Standard)	71 x 71 x 45	S55720-S143	**AQR2540NH**

AQR2570..

Base module with KNX for temperature and humidity measurement

- Base module without sensor for plugging onto a front module
- 1 analog input to connect temperature sensors with NTC 10k sensing element to measure room, floor, or ceiling temperature
- 2 multifunctional binary inputs to connect window contacts or buttons
- Power supply via KNX bus, bus load < 5 mA

- Communication: KNX S-Mode, KNX LTE-Mode (Synco)

Data sheet	N1411
Voltage supply	KNX bus
Analog inputs, number	1
Analog inputs	Passive temperature sensor NTC 10k
Digital inputs, number	2
Digital inputs	Potential-free contacts
Warranty	60 Months

Range overview AQR2570..

Mechanical design	Stock no.	Product no.
EU (CEE/VDE)	S55720-S203	**AQR2570NF**
IT (3 Modular)	S55720-S205	**AQR2570NG**
UK (British Standard)	S55720-S204	**AQR2570NH**
US (UL)	S55720-S206	**AQR2570NJ**

Duct temperature sensor, passive

QAM21..

Fully active, flexible probe for averaging.

Note on fixing:
Supplied complete with mounting flange.

Data sheet	N1761
Time constant	At v = 2 m/s: 30 s
Warranty	60 Months

Range overview QAM21..

Probe length [mm]	Sensing element, temperature	Measuring range, temperature [°C]	Measurement accuracy [K]	Stock no.	Product no.
400	Pt100	-50...80	At -50...80 °C: ±0.7	BPZ:QAM2110.040	**QAM2110.040**
2000	Pt1000	-50...80	At -50...80 °C: ±0.7	BPZ:QAM2112.200	**QAM2112.200**
400	LG-Ni1000	-50...80	At -50...80 °C: ±1.8	BPZ:QAM2120.040	**QAM2120.040**
2000	LG-Ni1000	-50...80	At -50...80 °C: ±1.8	BPZ:QAM2120.200	**QAM2120.200**
6000	LG-Ni1000	-50...80	At -50...80 °C: ±1.8	BPZ:QAM2120.600	**QAM2120.600**
400	NTC 10k	-40...80	At -40...80 °C: ±1.2	BPZ:QAM2130.040	**QAM2130.040**
400	Pt1000	-50...80	At -50...80 °C: ±0.7	BPZ:QAM2112.040	**QAM2112.040**

Duct temperature sensor active

QAM21..1..

Fully active, flexible probe for averaging.

Note on fixing:
Supplied complete with mounting flange.

Power consumption	≤ 1 VA
Measuring range, temperature	-50...50 °C
Measurement accuracy	At -50...50 °C: ±0.9 K
Time constant	30 s at v = 2 m/s
Immersion length	400 mm
Connection, electrical	Screw terminals
Type of fixing	Flange
Degree of protection	IP54
Dimensions (W x H x D)	80 x 88 x 39 mm
Warranty	60 Months

Range overview QAM21..1..

Signal output temperature	Operating voltage [V]	Probe length [mm]	Data sheet	Stock no.	Product no.
Modbus RTU	AC 24 DC 13.5...35	400	A6V11610632	S55720-S466	**QAM2151.040/MO**
DC 0...10 V DC 4...20 mA	AC 24 DC 13.5...35	400	N1762	BPZ:QAM2161.040	**QAM2161.040**
DC 4...20 mA	DC 13.5...35	400	N1762	BPZ:QAM2171.040	**QAM2171.040**

Accessories for QAM21.. and QAM21..1

Product Title	Data sheet	Stock no.	Product no.
Mounting flange, adjustable depth	N1193	BPZ:AQM63.0	**AQM63.0**
3 capillary supports and 3 spacers for QAF.. Mounting	N1821	BPZ:AQM63.2	**AQM63.2**
Accessory, sensor QAM9020, mounting flange	N1772	BPZ:AQM9020	**AQM9020**
6 Capillary tube clamps for QAF../QAM.. mounting	N1284	BPZ:AQM63.3	**AQM63.3**

FK-TP/200

Duct temperature sensor Pt100, for high temperature

With connecting head to DIN.
No protection pocket required.

Supplied complete with mounting flange.

Data sheet	N1778
Measuring range, temperature	-70...260 °C
Sensing element, temperature	Pt100
Sensing element	Pt100
Signal output temperature	Pt100
Measurement accuracy	At -70...260 °C: ±1.8 K
Time constant	Air v=1 m/s: 100 s
Immersion length	200 mm
Material, immersion pocket	Stainless steel
Connection, mechanical	Flange
Connection, electrical	Screw terminals
Type of fixing	Flange
Degree of protection	IP65
Dimensions (W x H x D)	60 x 80 x 83 mm
Warranty	60 Months

Stock no.	Product no.
BPZ:FK-TP/200	**FK-TP/200**

QAM16..020

Duct temperature sensor

Duct temperature sensor, probe L=200mm

Data sheet	A6V12251940
Immersion length	200 mm
Probe length	200 mm
Warranty	60 Months

7

Range overview QAM16..020

Time constant [s]	Operating range [°C]	Stock no.	Product no.
Air v=2 m/s: 30	-30...70	S55720-S512	**QAM1612.020**
Air v=2 m/s: 30	-30...70	S55720-S513	**QAM1630.020**

Immersion temperature sensor

QAE1612.010

Passive sensor for acquiring the water temperature in pipes and tanks

Data sheet	A6V12166488
Sensing element	Pt1000
Measuring range, temperature	-15...100 °C
Measurement accuracy	2 %
Immersion length	100 mm
Material, immersion pocket	Stainless steel
Dimensions (W x H x D)	56 x 72 x 152.5 mm
Warranty	60 Months

Stock no.	Product no.
S55720-S197	**QAE1612.010**

7

QAE21..

Immersion temperature sensor, passive

Fixing is made by protection pocket or compression fitting. If for the nominal pressure no entry can be found in the table, no protection pocket is included as standard and the nominal pressure depends on the protection pocket used (see accessories). By using the compression fitting AQE2102 the nominal pressure is 16 bar (PN16).

Data sheet	N1781
Sensing element	Pt100
Time constant	With protection pocket: 30 s Without protection pocket: 8 s
Material, immersion pocket	Stainless steel
Connection, electrical	Screw terminals
Dimensions (W x H x D)	80 x 60 x 31 mm
Warranty	60 Months

Range overview QAE21..

Sensing element, temperature	Measuring range, temperature [°C]	Measurement accuracy [K]	Immersion length [mm]	Protection pocket	Stock no.	Product no.
Pt100	-30...130	At -30...130 °C: ±0.95	100	Not included	BPZ:QAE2111.010	**QAE2111.010**
Pt1000	-30...130		100	Not included	S55720-S517	**QAE2115.010**
Pt1000	-30...130		150	Not included	S55720-S518	**QAE2115.015**
Pt100	-30...130	At -30...130 °C: ±0.95	150	Not included	BPZ:QAE2111.015	**QAE2111.015**
Pt1000	-30...130	At -30...130 °C: ±0.95	100	Not included	BPZ:QAE2112.010	**QAE2112.010**
Pt1000	-30...130	At -30...130 °C: ±0.95	150	Not included	BPZ:QAE2112.015	**QAE2112.015**
LG-Ni1000	-30...130	At -30...130 °C: ±1.3	100	Protection pocket included; PN10	BPZ:QAE2120.010	**QAE2120.010**
LG-Ni1000	-30...130	At -30...130 °C: ±1.3	150	Protection pocket included; PN10	BPZ:QAE2120.015	**QAE2120.015**
LG-Ni1000	-30...130	At -30...130 °C: ±1.3	100	Not included	BPZ:QAE2121.010	**QAE2121.010**
LG-Ni1000	-30...130	At -30...130 °C: ±1.3	150	Not included	BPZ:QAE2121.015	**QAE2121.015**
NTC 10k	-30...125	At -30...125 °C: ±1.7	100	Not included	BPZ:QAE2130.010	**QAE2130.010**
NTC 10k	-30...125	At -30...125 °C: ±1.7	150	Not included	BPZ:QAE2130.015	**QAE2130.015**

Immersion temperature sensor active

QAE21..4

Fixing is made by protection pocket or compression fitting. No protection pocket is included as standard. The nominal pressure depends on the protection pocket used (see accessories). By using the compression fitting AQE2102 the nominal pressure is 16 bar (PN 16).

Power consumption	≤ 1 VA
Measuring range, temperature	-10...120 °C
Measurement accuracy	At 0...70 °C: ±1 K At -10...120 °C: ±1.4 K
Time constant	With protection pocket: 30 s
Material, immersion pocket	Stainless steel
Connection, electrical	Screw terminals
Degree of protection	IP54
Dimensions (W x H x D)	80 x 88 x 39 mm
Warranty	60 Months

Range overview QAE21..4

Signal output temperature	Operating voltage [V]	Immersion length [mm]	Data sheet	Stock no.	Product no.
Modbus RTU	AC 24 DC 13.5...35	100	A6V11610252	S55720-S465	**QAE2154.010/MO**
DC 0...10 V DC 0...5 V DC 4...20 mA	AC 24 DC 13.5...35	100	N1782	BPZ:QAE2164.010	**QAE2164.010**
DC 0...10 V DC 0...5 V DC 4...20 mA	AC 24 DC 13.5...35	150	N1782	BPZ:QAE2164.015	**QAE2164.015**
DC 4...20 mA	DC 13.5...35	100	N1782	BPZ:QAE2174.010	**QAE2174.010**
DC 4...20 mA	DC 13.5...35	150	N1782	BPZ:QAE2174.015	**QAE2174.015**

Protection pocket for QAE21..

Packaging unit	Protection pocket [LW7]	Material	PN class	Data sheet	Stock no.	Product no.
1 pc	100 mm, G½"	Brass, nickel-plated	PN 10	N1194	BPZ:ALT-SB100	**ALT-SB100**
1 pc	150 mm, G½"	Brass, nickel-plated	PN 10	N1194	BPZ:ALT-SB150	**ALT-SB150**
1 pc	100 mm; G ½";	Stainless steel V4A	PN 16	N1194	BPZ:ALT-SS100	**ALT-SS100**
1 pc	150 mm, G½"	Stainless steel V4A	PN 16	N1194	BPZ:ALT-SS150	**ALT-SS150**
1 pc	100 mm, G½" (with flange)	Stainless steel V4A	PN 40	N1194	BPZ:ALT-SSF100	**ALT-SSF100**
1 pc	150 mm, G½" (with flange)	Stainless steel V4A	PN 40	N1194	BPZ:ALT-SSF150	**ALT-SSF150**

Accessories for QAE21..

Product Title	Data sheet	Stock no.	Product no.
Compression fitting with threaded nipple ½"	N1781	BPZ:AQE2102	**AQE2102**

QAE26.9

Immersion temperature sensor Ø 6 mm with cable and fitting

With connecting cable.

Data sheet	N1790
Sensing element	LG-Ni1000
Measuring range, temperature	-40...180 °C
Sensing element, temperature	LG-Ni1000
Time constant	3 s
Immersion length	25...260 mm
Material, immersion pocket	Stainless steel
Cable length	1.2 m
Connecting thread	R ¼"
PN class	PN 40
Diameter	6 mm
Dimensions (W x H x D)	310 x 14 x 14 mm
Warranty	24 Months

Stock no.	Product no.
BPZ:QAE26.9	**QAE26.9**

QAE26.9..

Immersion temperature sensur Ø 4 mm with cable and fitting

With connecting cable.

Other technical data identical to QAE26.9

Packaging unit QAE1020.024 100 pieces

Data sheet	N1790
Sensing element	LG-Ni1000
Sensing element, temperature	LG-Ni1000
Measurement accuracy	At -50...180 °C: ±1.75 K
Time constant	<2.5 s
Material, immersion pocket	Stainless steel
Cable length	2 m
Connecting thread	R ¼"
PN class	PN 16
Diameter	4 mm
Warranty	60 Months

7

Range overview QAE26.9..

Immersion length [mm]	Measuring range, temperature [°C]	Connection cable	Stock no.	Product no.
15...65	-50...180	Silicone	BPZ:QAE26.90	**QAE26.90**
15...125	-50...180	Silicone	BPZ:QAE26.91	**QAE26.91**
15...240	-50...180	Silicone	BPZ:QAE26.93	**QAE26.93**
15...465	-50...180	Silicone	BPZ:QAE26.95	**QAE26.95**
15...240	-5...105	PVC	BPZ:QAE1020.024	**QAE1020.024**

Immersion temperature sensor for high temperature

QAE3..

With connection head made of die-cast aluminium.
No protection pocket required.

Data sheet	N1794
Sensing element	Pt100
Sensing element, temperature	Pt100
Time constant	25 s
Material, immersion pocket	Stainless steel
Connection, electrical	Screw terminals
Type of fixing	Protection pocket G½ "
PN class	PN 40
Material, housing	Die-cast aluminum
Degree of protection	IP65
Dimensions (W x H x D)	69 x 92 x 81 mm
Warranty	60 Months

Range overview QAE3..

Measuring range, temperature [°C]	Analog output, signal	Immersion length [mm]	Operating voltage [V]	Data sheet	Stock no.	Product no.
-50...200	Passive	100		N1794	BPZ:QAE3010.010	**QAE3010.010**
-50...200	Passive	160		N1794	BPZ:QAE3010.016	**QAE3010.016**
0...200	DC 4...20 mA	100	DC 7.5...30	N1794	BPZ:QAE3075.010	**QAE3075.010**
0...200	DC 4...20 mA	160	DC 7.5...30	N1794	BPZ:QAE3075.016	**QAE3075.016**
-40...+120 (R2) °C 0...70 (R1)		100	DC 13.5...35	A6V12694043	S55720-S537	**QAE3174.010**
-40...+120 (R2) °C 0...70 (R1)		150	DC 13.5...35	A6V12694043	S55720-S538	**QAE3174.015**
-40...+120 (R2) °C 0...70 (R1)		100	DC 13.5...35	A6V12694043	S55720-S547	**QAE3174D.010**
-40...+120 (R2) °C 0...70 (R1)		150	DC 13.5...35	A6V12694043	S55720-S548	**QAE3174D.015**

Immersion temperature sensor Pt100, short time constant, for high temperature

FT-TP/..

With connecting head to DIN.
No protection pocket required.

Data sheet	N1797
Sensing element	Pt100
Measuring range, temperature	-100...450 °C
Sensing element, temperature	Pt100
Time constant	Air v = 1 m/s: <100 s Water v = 0,4 m/s: <5 s
Material, immersion pocket	Stainless steel
Connection, electrical	Screw terminals
PN class	PN 40
Dimensions (W x H x D)	60 x 80 x 85 mm
Warranty	60 Months

Range overview FT-TP/..

Immersion length [mm]	Stock no.	Product no.
100	BPZ:FT-TP/100	**FT-TP/100**
400	BPZ:FT-TP/400	**FT-TP/400**

QAE16..010

Immersion temperature sensor

Passive sensor for acquiring the water temperature in pipes and tanks

Data sheet	A6V12166488
Measurement accuracy	2 %
Immersion length	100 mm
Material, immersion pocket	Stainless steel
Dimensions (W x H x D)	56 x 72 x 152.5 mm
Warranty	60 Months

Range overview QAE16..010

Measuring range, temperature [°C]	Time constant [s]	Stock no.	Product no.
-15...100		S55720-S197	**QAE1612.010**
-15...100	With protection pocket: 30 Without protection pocket: 8	S55720-S511	**QAE1630.010**

Strap-on temperature sensor

QAD2..

Supplied complete with strap for pipe diameters from 15...140 mm.

Data sheet	N1801
Warranty	60 Months

Range overview QAD2..

Sensing element, temperature	Measuring range, temperature [°C]	Time constant [s]	Dimensions (WxHxD) [mm]	Stock no.	Product no.
LG-Ni1000	-30...130	3	60 x 67 x 43	BPZ:QAD22	**QAD22**
Pt100	-30...130	3	60 x 67 x 43	BPZ:QAD2010	**QAD2010**
Pt1000	-30...130	3	60 x 67 x 43	BPZ:QAD2012	**QAD2012**
NTC 10k	-30...125	6	60 x 67 x 43	BPZ:QAD2030	**QAD2030**

Strap-on temperature sensor with cable LG-Ni1000

QAD26.220

With cable, without housing

Supplied complete with strap for pipe diameters from 10...50 mm.

Data sheet	N1802
Measuring range, temperature	-35...90 °C
Sensing element	LG-Ni1000
Time constant	10 s
Cable length	2 m
Dimensions (W x H x D)	50 x 13 x 15 mm
Warranty	60 Months

	Stock no.	Product no.
	BPZ:QAD26.220	**QAD26.220**

QAC..

Outside sensor, passive

For acquiring the outside temperature and – to a lesser degree – solar radiation, the effect of wind and the temperature of the wall.

Data sheet	N1811
Warranty	60 Months

Range overview QAC..

Measuring range, temperature [°C]	Sensing element, temperature	Measurement accuracy [K]	Time constant [s]	Dimensions (WxHxD) [mm]	Stock no.	Product no.
-50...70	Pt100	0 °C: ±0.3	840	80 x 92 x 50	BPZ:QAC2010	**QAC2010**
				80 x 92 x 50	BPZ:QAC34/101	**QAC34/101**
-50...70	LG-Ni1000	0 °C: ±0.4	840	80 x 92 x 50	BPZ:QAC22	**QAC22**
-50...70	NTC 575	At -10...20 °C: ±1	720	80 x 92 x 50	BPZ:QAC32	**QAC32**
-40...70	NTC 10k	25 °C: ±0.46	840	80 x 92 x 50	BPZ:QAC2030	**QAC2030**
-50...70	Pt1000	0 °C: ±0.3	840	80 x 92 x 50	BPZ:QAC2012	**QAC2012**

QAC31..

Outside temperature sensor active

Active sensor for acquiring the outside temperature. For use in heating, ventilation and air conditioning plants.

The QAC31.. may be used as an high-quality room sensor.

Data sheet	N1814
Sensing element, temperature	Pt1000
Measuring range, temperature	-50...50 °C
Time constant	20 min
Connection, electrical	Screw terminals
Degree of protection	IP65
Warranty	60 Months

Range overview QAC31..

Analog output, signal	Operating voltage [V]	Measurement accuracy [K]	Dimensions (WxHxD) [mm]	Stock no.	Product no.
DC 0...10 V	AC 24 DC 13.5...35	At -50...50 °C: ±0.9	80 x 88 x 39	BPZ:QAC3161	**QAC3161**
DC 4...20 mA	DC 13.5...35	At -50...50 °C: ±0.9	80 x 88 x 39	BPZ:QAC3171	**QAC3171**

Flue gas temperature sensor Pt1000

FGT-PT1000

For measuring the flue gas temperature in flueways.

Data sheet	N1846
Measuring range, temperature	-20...400 °C
Sensing element	Pt1000
Sensing element, temperature	Pt1000
Immersion length	65 mm
Material, immersion pocket	Sensor sleeve, stainless steel
Connection cable	2-wire 1.5 m; Teflon with steel wire mesh
Cable length	1.5 m
Material	Stainless steel V4A
Dimensions (W x H x D)	150 x 80 x 30 mm
Warranty	60 Months

Stock no.	Product no.
BPZ:FGT-PT1000	**FGT-PT1000**

Window pane temperature sensor

QAT22

Data sheet	N1830
Measuring range, temperature	-10...50 °C
Sensing element, temperature	LG-Ni1000
Sensing element	LG-Ni1000
Measurement accuracy	0 °C: ±0.4 K
Time constant	30 s
Connection cable	2-wire
Cable length	1.5 m
Degree of protection	IP65
Dimensions (W x H x D)	19 x 12 x 37 mm
Warranty	60 Months

Stock no.	Product no.
BPZ:QAT22	**QAT22**

QAP..

Cable temperature sensor (6 x 40.5 mm) for HVAC applications

Data sheet	N1831
Time constant	Fitted to pipe: <20 s
Protection pocket	40,5 x 6 mm
Material, protection pocket	Stainless steel
Type of fixing	Cable tie or with accessories
Degree of protection	IP65
Warranty	60 Months

Range overview QAP..

Cable length [m]	Sensing element, temperature	Connection cable	Measurement accuracy [K]	Measuring range, temperature [°C]	Dimensions (WxHxD) [mm]	Stock no.	Product no.
1.5	LG-Ni1000	Silicone	At -30...130 °C: ±1.3	-30...130	40.5 x 6 x 6	BPZ:QAP21.3	**QAP21.3**
8	LG-Ni1000	Silicone	At -30...130 °C: ±1.3	-30...130	40.5 x 6 x 6	BPZ:QAP21.3/8000	**QAP21.3/8000**
1.5	Pt100	Silicone	At -30...130 °C: ±0.95	-30...130	40.5 x 6 x 6	BPZ:QAP2010.150	**QAP2010.150**
1.5	Pt1000	Silicone	At -30...130 °C: ±0.95	-30...130	40.5 x 6 x 6	BPZ:QAP2012.150	**QAP2012.150**
2	LG-Ni1000	PVC	At -30...130 °C: ±1.3	-25...95	40 x 6 x 6	BPZ:QAP22	**QAP22**
2	NTC 10k	PVC	At -25...95 °C: ±1.4	-25...95	40.5 x 6 x 6	BPZ:QAP1030.200	**QAP1030.200**

Accessories for QAP..

Product Title	Packaging unit	Data sheet	Stock no.	Product no.
Changeover cable holder for QAP..	Set of 10 pieces	N1831	BPZ:ARG22.1	**ARG22.1**
Aluminium bar attachment for QAP..	Set of 5 pieces	N1831	BPZ:ARG22.2	**ARG22.2**
Terminal housing	1 box	N1207	S55700-P131	**RAK-H-M**
Cable holder for protection pocket mounting	1 piece	N1831	BPZ:421314160	**421314160**

7

QAP21.2

Cable temperature sensor for high-temperature applications (180°C)

For acquiring the water temperature in flat solar collectors.

Data sheet	N1833
Measuring range, temperature	-30...180 °C
Sensing element, temperature	LG-Ni1000
Sensing element	LG-Ni1000
Measurement accuracy	At -30...180 °C: ±1.65 K
Time constant	Without protection pocket: 20 s
Protection pocket	50 mm; 6 mm
Material, protection pocket	Stainless steel
Connection cable	Silicone
Cable length	1.5 m
Degree of protection	IP67
Dimensions (W x H x D)	50 x 6 x 6 mm
Warranty	60 Months

	Stock no.	Product no.
	BPZ:QAP21.2	**QAP21.2**

Cable temperature sensor for use in refrigeration plants (-50 °C)

QAZ21.68..

Supplied complete with 2 cable ties and sleeve coated with thermal conductive wax for fitting to pipework.

Data sheet	N1848
Measuring range, temperature	-50...80 °C
Sensing element, temperature	LG-Ni1000
Time constant	Fitted to pipework <20 s
Material, protection pocket	Stainless steel
Protection pocket	50 x 6 mm
Warranty	60 Months

Range overview QAZ21.68..

Cable length [m]	Packaging unit	Stock no.	Product no.
2	1 piece	BPZ:QAZ21.682/101	**QAZ21.682/101**
5	100 pieces	BPZ:QAZ21.685/101	**QAZ21.685/101**

Cable sensor for fan coil applications

QAH11..

For installation in fan coil units as
- a return air temperature sensor
- a changeover sensor

Data sheet	N1840
Measuring range	For fixed cable
Sensing element	NTC 3k
Measuring range, temperature	-20...70 °C
Sensing element, temperature	NTC 3k
Time constant	1.5 min at v = 0 m/s
Cable length	2.5 m
Warranty	60 Months

Range overview QAH11..

Connection cable	Packaging unit	Stock no.	Product no.
2-wire Ferrules	10 pieces	BPZ:QAH11.1	**QAH11.1**

Accessories for QAH11..

Product Title	Packaging unit	Data sheet	Stock no.	Product no.
Changeover cable holder for QAH11..	10 pieces	N3009	BPZ:ARG86.3	**ARG86.3**

QFA20..

Room sensor for rel. humidity / temperature

For relative humidity and temperature.

Measurement range humidity	0...95 % r.h.
Measurement accuracy	23 °C: 23 % r.h., 0...95 % r.h.: ±5 % r.h.
Time constant	Humidity: 20 s Temperature: 510 s
Dimensions (W x H x D)	90 x 100 x 36 mm
Warranty	60 Months

Range overview QFA20..

Signal output humidity	Signal output temperature	Operating voltage [V]	Measuring range, temperature [°C]	Display	Stock no.	Product no.
Modbus RTU	Modbus RTU	AC 24 DC 13.5...35	-40...70		S55720-S508	**QFA2050/MO**
Modbus RTU	Modbus RTU	AC 24 DC 13.5...35	-40...70	LCD	S55720-S509	**QFA2050D/MO**
DC 0...10 V		AC 24 DC 13.5...35			BPZ:QFA2000	**QFA2000**
DC 4...20 mA		DC 13.5...35 24			S55720-S114	**QFA2001**
DC 0...10 V	LG-Ni1000	AC 24 DC 13.5...35	0...50		BPZ:QFA2020	**QFA2020**
DC 0...10 V	DC 0...10 V	AC 24 DC 13.5...35	0...50 -35...35 -40...70		BPZ:QFA2060	**QFA2060**
DC 0...10 V	DC 0...10 V	AC 24 DC 13.5...35	0...50 -35...35 -40...70	LCD	BPZ:QFA2060D	**QFA2060D**
DC 4...20 mA	DC 4...20 mA	DC 13.5...35 24	0...50 -35...35 -40...70		S55720-S115	**QFA2071**

7

QFA2068

Room sensor for humidity (DC 0...10 V) and temperature (DC 0...10 V)

For relative humidity and temperature

Data sheet	A6V11600411
Operating voltage	AC/DC 13.5...35 V
Power consumption	0.4 VA
Measuring range, temperature	-15...50 °C
Measurement range humidity	0...95 % r.h.
Measurement accuracy	23 °C: 23 % r.h., 0...95 % r.h.: ±5 % r.h.
Time constant	20 s
Signal output temperature	DC 0...10 V DC 4...20 mA LG-Ni1000
Signal output humidity	DC 0...10 V DC 4...20 mA
Color	White/Gray
Dimensions (W x H x D)	90 x 100 x 36 mm
Warranty	60 Months

Stock no.	Product no.
S55720-S462	**QFA2068**

Room sensor for humidity (DC 0...10 V) and temperature (DC 0...10 V), with digital Display

QFA2068D

For relative humidity and temperature

Data sheet	A6V11600411
Operating voltage	AC/DC 13.5...35 V
Power consumption	0.4 VA
Measuring range, temperature	-15...50 °C
Measurement range humidity	0...100 % r.h.
Measurement accuracy	At 23 °C and AC/DC 24 V and at 0...95 % r.h.: ±5 % r.h. At 23 °C and AC/DC 24 V and at 30...70 % r.h.: ±3 % r.h. At AC/DC 24 V and 23 °C: ±0.3 K At AC/DC 24 V and 15...35 °C: ±0.7 K At AC/DC 24 V and -35...+50 °C: ±1 K
Time constant	20 s
Signal output temperature	DC 0...10 V DC 4...20 mA LG-Ni1000
Signal output humidity	DC 0...10 V DC 4...20 mA
Color	White/Gray
Dimensions (W x H x D)	90 x 100 x 36 mm
Warranty	60 Months

Stock no.	Product no.
S55720-S463	**QFA2068D**

Room sensor for humidity (DC 4...20 mA) and temperature (DC 4...20 mA)

QFA2079

For relative humidity and temperature

Data sheet	A6V11600411
Operating voltage	DC 13.5...35 V
Power consumption	1.4 W
Measuring range, temperature	-15...50 °C
Measurement range humidity	0...100 % r.h.
Measurement accuracy	At 23 °C and AC/DC 24 V and at 0...95 % r.h.: ±5 % r.h. At 23 °C and AC/DC 24 V and at 30...70 % r.h.: ±3 % r.h. At AC/DC 24 V and 23 °C: ±0.3 K At AC/DC 24 V and 15...35 °C: ±0.7 K At AC/DC 24 V and -35...+50 °C: ±1 K
Time constant	20 s
Signal output temperature	DC 0...10 V DC 4...20 mA LG-Ni1000
Signal output humidity	DC 0...10 V DC 4...20 mA
Color	White/Gray
Dimensions (W x H x D)	90 x 100 x 36 mm
Warranty	60 Months

Stock no.	Product no.
S55720-S464	**QFA2079**

QFA2890/WI

Wireless room sensor, KNX IoT/Thread, Temperature & Humidity

Wireless room sensor for temperature & humidity
- Wirless communication via KNX IoT over Thread
- Measurement accuracy up to ± 0.3 °C & ± 2 % r.h.
- More than 10 years battery lifetime (under normal operating conditions)
- Dimensions: 88 x 88 x 14 mm

Data sheet	A6V12871702
Battery life	Up to 10 years (under normal operating conditions with 10 minutes wake-up cycle)
Power consumption	Max. 20 mA
Measuring range, temperature	0...50 °C
Time constant	Rel. humidity: 20 s (depending on air flow) Temperature: ≤ 8.5 min (depending on air flow and thermal coupling to the wall)
Measurement accuracy	Rel. humidity at 30...70 % r.h.: ±2 % r.h. Rel. humidity at 0...30 % r.h./70...100 % r.h.: ±5 % r.h. Temperature at 21...25 °C: ±0.3 K Temperature at 15...21 °C/25...35 °C: ±0.7 K Temperature at 0...15 °C/35...50 °C: ±1 K
Communication	2400...2483.5 MHz
Indoor wireless range	50 m
Display	no display
Color	White
Degree of protection	IP30
Dimensions (W x H x D)	88 x 88 x 14 mm
Warranty	60 Months

Stock no.	Product no.
S55720-S551	QFA2890/WI

7

Room sensors for rel. humidity / temperature for demanding requirements

QFA31..

For relative humidity and temperature.
Degree of protection: IP65, IP40 (measuring tip).

Data sheet	N1858
Measurement range humidity	0...100 % r.h.
Measurement accuracy	Humidity at 0...100 % r.h. and 23 °C: ±2 % r.h. Temperature, at 15...35 °C: ±0.6 K Temperature, at 40...70 °C: ±0.8 K
Time constant	Humidity: <20 s Temperature: <8.5 min
Connection, electrical	Screw terminals
Degree of protection	IP65 / IP40
Dimensions (W x H x D)	80 x 144 x 39 mm
Warranty	60 Months

Range overview QFA31..

Signal output humidity	Signal output temperature	Operating voltage [V]	Measuring range, temperature [°C]	Display	Stock no.	Product no.
DC 0...10 V		AC 24 DC 13.5...35			BPZ:QFA3100	**QFA3100**
Modbus RTU	Modbus RTU	AC 24 DC 13.5...35	-40...70		S55720-S535	**QFA3150/MO**
DC 4...20 mA	DC 4...20 mA	DC 13.5...35 AC 24	0...50 -35...35 -40...70	LCD	S55720-S541	**QFA3173**
DC 4...20 mA	DC 4...20 mA	DC 13.5...35 AC 24	0...50 -35...35 -40...70	LCD	S55720-S542	**QFA3173D**
DC 4...20 mA		DC 13.5...35			BPZ:QFA3101	**QFA3101**
DC 0...10 V	DC 0...10 V	AC 24 DC 13.5...35	0...50 -35...35 -40...70		BPZ:QFA3160	**QFA3160**
DC 0...10 V	DC 0...10 V	AC 24 DC 13.5...35	0...50 -35...35 -40...70	LCD	BPZ:QFA3160D	**QFA3160D**
DC 4...20 mA	DC 4...20 mA	DC 13.5...35	0...50 -35...35 -40...70		BPZ:QFA3171	**QFA3171**
DC 4...20 mA	DC 4...20 mA	DC 13.5...35	0...50 -35...35 -40...70	LCD	QFA3171D	**QFA3171D**

QFA41..

Room sensors for rel. humidity / temperature for demanding requirements, with calibration certificate

For relative humidity and temperature.
Degree of protection: IP65, IP40 (measuring tip).

Data sheet	N1859
Measurement range humidity	0...100 % r.h.
Measurement accuracy	Humidity at 0...100 % r.h. and 23 °C: ±2 % r.h. Temperature, at 15...35 °C: ±0.6 K Temperature, at 40...70 °C: ±0.8 K
Time constant	Humidity: <20 s Temperature: <8.5 min
Connection, electrical	Round connector
Degree of protection	IP65 / IP40
Dimensions (W x H x D)	80 x 144 x 39 mm
Warranty	60 Months

Range overview QFA41..

Signal output humidity	Signal output temperature	Operating voltage [V]	Measuring range, temperature [°C]	Display	Stock no.	Product no.
DC 0...10 V	DC 0...10 V	AC 24 DC 13.5...35	0...50 -35...35 -40...70	---	BPZ:QFA4160	**QFA4160**
DC 0...10 V	DC 0...10 V	AC 24 DC 13.5...35	0...50 -35...35 -40...70	LCD	QFA4160D	**QFA4160D**
DC 4...20 mA	DC 4...20 mA	DC 13.5...35	0...50 -35...35 -40...70	---	BPZ:QFA4171	**QFA4171**
DC 4...20 mA	DC 4...20 mA	DC 13.5...35	0...50 -35...35 -40...70	LCD	QFA4171D	**QFA4171D**

7

Accessories for QFA..

Product Title	Data sheet	Stock no.	Product no.
Radiation shield for exterior wall mounting	N1858	BPZ:AQF3100	**AQF3100**
Filter cap for humidity sensor	N1858	BPZ:AQF3101	**AQF3101**
Filter cap for H_2O_2	N1858	S55720-S591	**AQF3102**
Stainless Steel Filter Cap	N1858	S55720-S592	**AQF3103**
Exchangeable measuring tip	N1858	AQF3150	**AQF3150**
Exchangeable measuring tip, with calibration certificate	N1859	BPZ:AQF4150	**AQF4150**
Remote sensing cable 3 m for sensor tip	N1859	AQY2010	**AQY2010**
Service-Set		AQF3153	**AQF3153**

Front modules for base module

AQR253..

- Front module with sensors

Data sheet	N1411
Color	Titanium white
Degree of protection	IP30
Warranty	60 Months

Range overview AQR253..

Measuring range, temperature [°C]	Signal output temperature	Measurement range humidity [% r.h.]	Display	Dimensions (WxHxD) [mm]	Stock no.	Product no.
0...50	Active LG-Ni1000	0...100		55 x 55 x 12	S55720-S138	**AQR2534ANW**
				55 x 55 x 12	S55720-S137	**AQR2530NNW**
0...50	Active			55 x 55 x 12	S55720-S136	**AQR2532NNW**
0...50	Active	0...100		55 x 55 x 12	S55720-S141	**AQR2535NNW**
0...50	Active	0...100	CO_2 indicator by LED	55 x 55 x 38	S55720-S219	**AQR2535NNWQ**

The matching design frame must be ordered separately.

Frames for front modules AQR253..

Product Title	Color	Dimensions (W x H)	Data sheet	Stock no.	Product no.
Frame DELTA line for front module	Titanium white	80.2 x 80.2 mm	N1410	S55720-S158	**AQR2510NFW**
Frame DELTA azio for front module	Titanium white	80 x 120 mm / 120 x 80 mm	N1410	S55720-S160	**AQR2510NGW**
Frame DELTA miro for front module	Titanium white	90 x 90 mm	N1410	S55720-S159	**AQR2510NHW**

Base modules for temperature and humidity measurement

AQR2540..

- Base module without sensor for plugging onto a front module

Data sheet	N1410
Operating voltage	AC 24 V DC 15...36 V
Connection, electrical	Screw terminals
Analog output, signal	DC 0...10 V DC 2...10 V DC 0...5 V DC 0...20 mA DC 4...20 mA DC 0...10 mA
Digital outputs	CO: 1 Potential-free
Warranty	60 Months

Range overview AQR2540..

Mechanical design	Dimensions (WxHxD) [mm]	Stock no.	Product no.
EU (CEE/VDE)	71 x 71 x 45	S55720-S142	**AQR2540NF**
IT (3 modular)	71 x 71 x 45	S55720-S144	**AQR2540NG**
UK (British Standard)	71 x 71 x 45	S55720-S143	**AQR2540NH**

AQR2570..

Base module with KNX for temperature and humidity measurement

- Base module without sensor for plugging onto a front module
- 1 analog input to connect temperature sensors with NTC 10k sensing element to measure room, floor, or ceiling temperature
- 2 multifunctional binary inputs to connect window contacts or buttons
- Power supply via KNX bus, bus load < 5 mA

- Communication: KNX S-Mode, KNX LTE-Mode (Synco)

Data sheet	N1411
Voltage supply	KNX bus
Analog inputs, number	1
Analog inputs	Passive temperature sensor NTC 10k
Digital inputs, number	2
Digital inputs	Potential-free contacts
Warranty	60 Months

Range overview AQR2570..

Mechanical design	Stock no.	Product no.
EU (CEE/VDE)	S55720-S203	**AQR2570NF**
IT (3 Modular)	S55720-S205	**AQR2570NG**
UK (British Standard)	S55720-S204	**AQR2570NH**
US (UL)	S55720-S206	**AQR2570NJ**

Room hygrostat, setpoint setting range 30...90 % r.h., setpoint adjuster inside device

QFA1000

- 2-position controller with humidity sensor
- Setpoint adjuster inside device

Data sheet	N1518
Setpoint setting range	30...90 % r.h.
Switching differential	6 % r.h.
Time constant	Air v=0.2 m/s: 300 s
Digital outputs	CO: 1 Potential-free
Connection, electrical	Screw terminals
Degree of protection	IP20
Dimensions (W x H x D)	76 x 76 x 34 mm
Warranty	60 Months

Stock no.	Product no.
BPZ:QFA1000	**QFA1000**

Room hygrostat, setpoint setting range 30...90 % r.h., external setpoint adjustment

QFA1001

- 2-position controller with humidity sensor
- External setpoint adjustment

Data sheet	N1518
Setpoint setting range	30...90 % r.h.
Switching differential	6 % r.h.
Digital outputs	CO: 1 Potential-free
Connection, electrical	Screw terminals
Degree of protection	IP20
Dimensions (W x H x D)	76 x 76 x 34 mm
Warranty	60 Months

Stock no.	Product no.
BPZ:QFA1001	**QFA1001**

QFM1660

Duct sensor for humidity (0...10 V) and temperature (0...10 V)

Active sensor for acquiring the air humidity and temperature in air duct

Data sheet	Q3731
Operating voltage	AC 24 V
Measurement range humidity	10...90 % r.h.
Measurement accuracy	25 °C: ±0.8 K At 20...25 % r.h., 10...90 % r.h.: ±5 % r.h.
Analog output, signal	DC 0...10 V
Signal output temperature	DC 0...10 V
Signal output humidity	DC 0...10 V
Dimensions (W x H x D)	222 x 56 x 72 mm
Warranty	60 Months

Stock no.	Product no.
S55720-S198	**QFM1660**

QFM21..

Duct sensor for rel. humidity / temperature

For relative humidity and temperature.

Measurement range humidity	0...95 % r.h.
Measurement accuracy	Humidity at 30...70 % r.h. and 23 °C: ±3 % r.h. Temperature, at 15...35 °C: ±0.8 K Temperature, at 35...50 °C: ±1.0 K
Time constant	Humidity: <20 s Temperature in with 2 m/s moved air: <3.5 min
Immersion length	90...154 mm
Connection, electrical	Screw terminals
Type of fixing	Flange
Degree of protection	IP54
Dimensions (W x H x D)	80 x 88 x 39 mm
Warranty	60 Months

7

Range overview QFM21..

Signal output humidity	Signal output temperature	Operating voltage [V]	Measuring range, temperature [°C]	Data sheet	Stock no.	Product no.
DC 0...10 V DC 0...5 V DC 4...20 mA		AC 24 DC 13.5...35		N1864	BPZ:QFM2100	**QFM2100**
DC 4...20 mA		DC 13.5...35		N1864	BPZ:QFM2101	**QFM2101**
DC 0...10 V DC 0...5 V DC 4...20 mA	LG-Ni1000	AC 24 DC 13.5...35	0...50 -35...35 -40...70	N1864	BPZ:QFM2120	**QFM2120**
Modbus RTU	Modbus RTU	AC 24 DC 13.5...35	-40...70	A6V11610635	S55720-S467	**QFM2150/MO**
DC 0...10 V DC 0...5 V DC 4...20 mA	DC 0...10 V DC 0...5 V DC 4...20 mA	AC 24 DC 13.5...35	0...50 -35...35 -40...70	N1864	BPZ:QFM2160	**QFM2160**
DC 4...20 mA	DC 4...20 mA	DC 13.5...35	0...50 -35...35 -40...70	N1864	BPZ:QFM2171	**QFM2171**

Duct sensors for rel. humidity / temperature for demanding requirements

QFM31..

For relative humidity and temperature.

Measurement range humidity	0...100 % r.h.
Measurement accuracy	Humidity at 0...100 % r.h. and 23 °C: ±2 % r.h. Temperature, at 15...35 °C: ±0.6 K Temperature, at 40...70 °C: ±0.8 K
Immersion length	90...206 mm
Connection, electrical	Screw terminals
Type of fixing	Flange
Degree of protection	IP65
Dimensions (W x H x D)	80 x 88 x 39 mm
Warranty	60 Months

Range overview QFM31..

Signal output humidity	Signal output temperature	Operating voltage [V]	Measuring range, temperature [°C]	Data sheet	Stock no.	Product no.
DC 0...10 V DC 0...5 V DC 4...20 mA		AC 24 DC 13.5...35		N1882	BPZ:QFM3100	**QFM3100**
DC 4...20 mA		DC 13.5...35		N1882	BPZ:QFM3101	**QFM3101**
Modbus RTU	Modbus RTU	AC 24 DC 13.5...35	-40...70	A6V11610638	S55720-S468	**QFM3150/MO**
DC 0...10 V DC 0...5 V DC 4...20 mA	DC 0...10 V DC 0...5 V DC 4...20 mA	AC 24 DC 13.5...35	0...50 -35...35 -40...70	N1882	BPZ:QFM3160	**QFM3160**
DC 4...20 mA	DC 4...20 mA	DC 13.5...35	0...50 -35...35 0...70	N1882	BPZ:QFM3171	**QFM3171**

Duct sensors for rel. humidity / temperature for demanding requirements

QFM31..D

For relative humidity and temperature.

Data sheet	N1882
Measurement range humidity	0...100 % r.h.
Measurement accuracy	Humidity at 0...100 % r.h. and 23 °C: ±2 % r.h. Temperature, at 15...35 °C: ±0.6 K Temperature, at 40...70 °C: ±0.8 K
Immersion length	90...206 mm
Connection, electrical	Screw terminals
Type of fixing	Flange
Degree of protection	IP65
Dimensions (W x H x D)	80 x 88 x 39 mm
Warranty	60 Months

Range overview QFM31..D

Signal output humidity	Signal output temperature	Operating voltage [V]	Measuring range, temperature [°C]	Display	Stock no.	Product no.
DC 0...10 V DC 0...5 V DC 4...20 mA	DC 0...10 V DC 0...5 V DC 4...20 mA	AC 24 DC 13.5...35	0...50 -35...35 -40...70	LCD	BPZ:QFM3160D	**QFM3160D**
DC 4...20 mA	DC 4...20 mA	DC 13.5...35	0...50 -35...35 -40...70	LCD	QFM3171D	**QFM3171D**

Humidity and temperature
Duct sensors QFM..

QFM41..

Duct sensor for rel. humidity/temperature for demanding requirements, with calibration certificate

For relative humidity and temperature.

Data sheet	N1883
Measurement range humidity	0...100 % r.h.
Measurement accuracy	Humidity at 0...100 % r.h. and 23 °C: ±2 % r.h. Temperature, at 15...35 °C: ±0.6 K Temperature, at 40...70 °C: ±0.8 K
Time constant	Humidity: <20 s Temperature in with 2 m/s moved air: <3.5 min
Immersion length	90...206 mm
Connection, electrical	Round connector
Type of fixing	Flange
Degree of protection	IP65
Dimensions (W x H x D)	80 x 117 x 39 mm
Warranty	60 Months

Range overview QFM41..

Signal output humidity	Signal output temperature	Operating voltage [V]	Measuring range, temperature [°C]	Stock no.	Product no.
DC 0...10 V	DC 0...10 V	AC 24 DC 13.5...35	0...50 -35...35 -40...70	BPZ:QFM4160	**QFM4160**
DC 4...20 mA	DC 4...20 mA	DC 13.5...35	0...50 -35...35 -40...70	BPZ:QFM4171	**QFM4171**

Accessories for duct sensors QFM..

Product Title	Data sheet	Stock no.	Product no.
Filter cap for humidity sensor	N1858	BPZ:AQF3101	**AQF3101**
Filter cap for H_2O_2	N1858	S55720-S591	**AQF3102**
Stainless Steel Filter Cap	N1858	S55720-S592	**AQF3103**
Exchangeable measuring tip	N1858	AQF3150	**AQF3150**
Exchangeable measuring tip, with calibration certificate	N1859	BPZ:AQF4150	**AQF4150**
Service-Set		AQF3153	**AQF3153**

Duct hygrostat, setpoint setting range 15...95 % r.h.

QFM81.2

On / off hygrostat with humidity sensor.
External setpoint adjustment.

Supplied complete with mounting flange.

Data sheet	N1514
Setpoint setting range	15...95 % r.h.
Switching differential	4 % r.h.
Digital outputs	CO: 1 Potential-free
Immersion length	130...156 mm
Digital output, switching current	5 (3)A
Digital output, switching voltage	250 V
Degree of protection	IP30
Dimensions (W x H x D)	73 x 140 x 64 mm
Warranty	60 Months

Stock no.	Product no.
BPZ:QFM81.2	**QFM81.2**

Room hygrostat, setpoint setting range 15...95 % r.h., setpoint adjuster inside device

QFM81.21

On / off hygrostat with humidity sensor.
Setpoint adjuster inside device.

Supplied complete with mounting flange.

Data sheet	N1514
Setpoint setting range	15...95 % r.h.
Switching differential	4 % r.h.
Digital outputs	CO: 1 Potential-free
Immersion length	130...156 mm
Digital output, switching current	5 (3)A
Digital output, switching voltage	250 V
Degree of protection	IP55
Dimensions (W x H x D)	73 x 140 x 64 mm
Warranty	60 Months

Stock no.	Product no.
BPZ:QFM81.21	**QFM81.21**

Humidity and temperature
Condensation monitor QXA..

QXA21..

Condensation monitor

For preventing condensation in buildings with chilled ceilings or in cooling plants.

Data sheet	A6V10741072
Operating voltage	AC 24 V DC 24 V
Power consumption	1 VA
Digital outputs	1-pin Potential-free Changeover contact
Switching point	95 ± 4 % r.h.
Connection, electrical	Screw terminals
Degree of protection	IP40
Dimensions (W x H x D)	60 x 83 x 37 mm
Warranty	60 Months

Range overview QXA21..

Product Title	Stock no.	Product no.
Condensation monitor	S55770-T375	**QXA2100**
Condensation monitor with remote sensor head (cable length 1 m)	S55770-T376	**QXA2101**

Room air quality sensor CO_2 / temperature / rel. Humidity / VOC

QPA..

Note: Not suited for safety-related applications!

Data sheet	N1961
Operating voltage	AC 24 V DC 15...35 V
Analog output, signal	DC 0...5 V DC 0...10 V DC 4...20 mA
Ambient temperature, operation	0...50 °C
Connection, electrical	Screw terminals
Degree of protection	IP30
Warranty	60 Months

Range overview QPA..

Measuring range	Measuring range, temperature [°C]	Measurement range humidity [% r.h.]	Display	Dimensions (WxHxD) [mm]	Stock no.	Product no.
0...100 % VOC				90 x 100 x 36	S55720-S119	**QPA1000**
0...2000 ppm CO_2				90 x 100 x 36	BPZ:QPA2000	**QPA2000**
0...2000 ppm CO_2 0...100 % VOC				90 x 100 x 36	BPZ:QPA2002	**QPA2002**
0...2000 ppm CO_2 0...100 % VOC			LCD	90 x 100 x 36	BPZ:QPA2002D	**QPA2002D**
0...2000 ppm CO_2	0...50 -35...35			90 x 100 x 36	BPZ:QPA2060	**QPA2060**
0...2000 ppm CO_2	0...50 -35...35		LCD	90 x 100 x 36	BPZ:QPA2060D	**QPA2060D**
0...2000 ppm CO_2	0...50 -35...35	0...95		90 x 100 x 36	BPZ:QPA2062	**QPA2062**
0...2000 ppm CO_2	0...50 -35...35	0...95	LCD	90 x 100 x 36	BPZ:QPA2062D	**QPA2062D**
0...2000 ppm CO_2				90 x 100 x 36	S55720-S121	**QPA2080**
0...2000 ppm CO_2			LCD	90 x 100 x 36	S55720-S122	**QPA2080D**

With the QPA2080 and QPA2080D the passive temperature element is freely selectable, enclosed in the delivery are LG-Ni1000, Pt1000, Pt100, NTC 10kOhm.

Room sensor CO_2 /Humidity/Temperature Modbus

QPA2052/MO

Room air quality sensor with Modbus communication
- Modbus RTU (RS-485)
- Maintenance-free CO_2 sensing element
- No recalibrations required
- DIP switches setting together with other controllers

Data sheet	A6V12046144
Operating voltage	AC 24 V DC 15...35 V
Measuring range	0...2000 ppm CO_2
Connection, electrical	Screw terminals
Type of fixing	Screws
Degree of protection	IP30
Dimensions (W x H x D)	90 x 100 x 36 mm
Warranty	60 Months

Stock no.	Product no.
S55720-S510	**QPA2052/MO**

QPA2892/WI

Wireless room sensor, KNX IoT/Thread, Temperature, Humidity & CO2

Wireless room sensor for temperature, humidity and CO2
- Wirless communication via KNX IoT over Thread
- Measurement accuracy up to ± 0.3 °C, ± 2 % r.h. & ± 50 ppm CO2
- More than 7 years battery lifetime (under normal operating conditions)
- Dimensions: 88 x 88 x 18 mm

Data sheet	A6V12871702
Battery life	Up to 7 years (under normal operating conditions with 10 minutes wake-up cycle)
Power consumption	Max. 20 mA
Measuring range, temperature	0...50 °C
Time constant	Rel. humidity: 20 s (depending on air flow) Temperature: ≤ 8.5 min (depending on air flow and thermal coupling to the wall) CO2: ≤ 5 min (depending on air flow)
Measurement accuracy	Rel. humidity at 30...70 % r.h.: ±2 % r.h. Rel. humidity at 0...30 % r.h./70...100 % r.h.: ±5 % r.h. Temperature at 21...25 °C: ±0.3 K Temperature at 15...21 °C/25...35 °C: ±0.7 K Temperature at 0...15 °C/35...50 °C: ±1 K CO2 at 0...2000 ppm: ±2 % m.v. / ±50 ppm
Communication	2400...2483.5 MHz
Indoor wireless range	50 m
Display	no display
Color	White
Degree of protection	IP30
Dimensions (W x H x D)	88 x 88 x 18 mm
Warranty	60 Months

Stock no.	Product no.
S55720-S552	**QPA2892/WI**

7

QPA84

Indoor air quality controller with integrated VOC sensor for mixed gas

In ventilation plant to optimize indoor air quality and consumption of energy by means of demand-controlled ventilation.

Data sheet	N1571
Operating voltage	AC 230 V
Power consumption	0.5 VA
Measured variable	Mixed gas (VOC)
Digital outputs	NO: 1 Non floating
Digital output, switching current	8 (6.8)A
Digital output, switching voltage	230 V
Connection, electrical	Screw terminals
Degree of protection	IP30
Dimensions (W x H x D)	96 x 101 x 39 mm
Warranty	60 Months

Stock no.	Product no.
BPZ:QPA84	**QPA84**

Room air quality sensor CO_2 / temperature (Basic)

QPA1..4

Note: Not suited for safety-related applications!

Data sheet	A6V101099173
Operating voltage	AC 24 V DC 15...35 V
Analog output, signal	DC 0...10 V DC 4...20 mA
Degree of protection	IP30
Warranty	60 Months

Range overview QPA1..4

Measuring range [ppm CO_2]	Measuring range, temperature [°C]	Dimensions (WxHxD) [mm]	Stock no.	Product no.
0...2000		90 x 100 x 36	S55720-S453	**QPA1004**
0...2000	0...50	90 x 100 x 36	S55720-S454	**QPA1064**

7

AQR253..

Front modules for base module

- Front module with sensors

Data sheet	N1411
Color	Titanium white
Degree of protection	IP30
Warranty	60 Months

Range overview AQR253..

Measuring range, temperature [°C]	Signal output temperature	Measurement range humidity [% r.h.]	Display	Dimensions (WxHxD) [mm]	Stock no.	Product no.
0...50	Active LG-Ni1000	0...100		55 x 55 x 12	S55720-S138	**AQR2534ANW**
				55 x 55 x 12	S55720-S137	**AQR2530NNW**
0...50	Active			55 x 55 x 12	S55720-S136	**AQR2532NNW**
0...50	Active	0...100		55 x 55 x 12	S55720-S141	**AQR2535NNW**
0...50	Active	0...100	CO_2 indicator by LED	55 x 55 x 38	S55720-S219	**AQR2535NNWQ**

The matching design frame must be ordered separately.

Frames for front modules AQR253..

Product Title	Data sheet	Stock no.	Product no.
Frame DELTA line for front module	N1410	S55720-S158	**AQR2510NFW**
Frame DELTA azio for front module	N1410	S55720-S160	**AQR2510NGW**
Frame DELTA miro for front module	N1410	S55720-S159	**AQR2510NHW**

AQR2547..

Base modules with integrated VOC measurement

- Base module with VOC sensing element to plug onto a front module

Data sheet	N1410
Operating voltage	AC 24 V DC 15...36 V
Analog output, signal	DC 0...10 V DC 2...10 V DC 0...5 V DC 0...20 mA DC 4...20 mA DC 0...10 mA
Connection, electrical	Screw terminals
Digital outputs	1-pin Potential-free Changeover contact
Warranty	60 Months

Range overview AQR2547..

Measuring range	Mechanical design	Dimensions (WxHxD) [mm]	Stock no.	Product no.
0...100 % VOC	EU (CEE/VDE)	71 x 71 x 45	S55720-S146	**AQR2547NF**

Front modules for base module

AQR253..

- Front module with sensors

Data sheet	N1411
Color	Titanium white
Degree of protection	IP30
Warranty	60 Months

Range overview AQR253..

Measuring range, temperature [°C]	Signal output temperature	Measurement range humidity [% r.h.]	Display	Dimensions (WxHxD) [mm]	Stock no.	Product no.
0...50	Active LG-Ni1000	0...100		55 x 55 x 12	S55720-S138	**AQR2534ANW**
				55 x 55 x 12	S55720-S137	**AQR2530NNW**
0...50	Active			55 x 55 x 12	S55720-S136	**AQR2532NNW**
0...50	Active	0...100		55 x 55 x 12	S55720-S141	**AQR2535NNW**
0...50	Active	0...100	CO_2 indicator by LED	55 x 55 x 38	S55720-S219	**AQR2535NNWQ**

The matching design frame must be ordered separately.

Frames for front modules AQR253..

Product Title	Data sheet	Stock no.	Product no.
Frame DELTA line for front module	N1410	S55720-S158	**AQR2510NFW**
Frame DELTA azio for front module	N1410	S55720-S160	**AQR2510NGW**
Frame DELTA miro for front module	N1410	S55720-S159	**AQR2510NHW**

Base modules with integrated CO_2 measurement

AQR2546..

- Base module with maintenance-free CO2 sensing element to plug onto a front module

Data sheet	N1410
Operating voltage	AC 24 V DC15...36 V
Analog output, signal	DC 0...10 V DC 2...10 V DC 0...5 V DC 0...20 mA DC 4...20 mA DC 0...10 mA
Connection, electrical	Screw terminals
Digital outputs	1-pin Potential-free Changeover contact
Warranty	60 Months

Range overview AQR2546..

Measuring range [ppm CO_2]	Mechanical design	Dimensions (WxHxD) [mm]	Stock no.	Product no.
0...2000	EU (CEE/VDE)	71 x 71 x 45	S55720-S147	**AQR2546NF**
0...2000	IT (3 modular)	110 x 64 x 45	S55720-S153	**AQR2546NG**
0...2000	UK (British Standard)	83 x 83 x 45	S55720-S150	**AQR2546NH**

AQR2576..

Base modules with KNX for CO_2 measurement

- Base module with maintenance and recalibration-free CO_2 sensor to plug onto a front module
- 1 analog input to connect temperature sensors with NTC 10k sensing element to measure room, floor, or ceiling temperature
- 2 multifunctional binary inputs to connect window contacts or buttons
- Power supply via KNX bus, bus load < 5 mA

- Communication: KNX S-Mode, KNX LTE-Mode (Synco)

Data sheet	N1411
Voltage supply	KNX bus
Measuring range	CO_2: 0...5000 ppm
Analog inputs, number	1
Analog inputs	Passive temperature sensor NTC 10k
Digital inputs, number	2
Digital inputs	Potential-free contacts
Warranty	60 Months

Range overview AQR2576..

Mechanical design	Dimensions (WxHxD) [mm]	Stock no.	Product no.
EU (CEE/VDE)	71 x 71 x 45	S55720-S207	**AQR2576NF**
IT (3 Modular)	71 x 71 x 45	S55720-S209	**AQR2576NG**
UK (British Standard)	71 x 71 x 45	S55720-S208	**AQR2576NH**
US (UL)	64 x 110 x 45	S55720-S210	**AQR2576NJ**

AQR253..

Front modules for base module

- Front module with sensors

Data sheet	N1411
Color	Titanium white
Degree of protection	IP30
Warranty	60 Months

Range overview AQR253..

Measuring range, temperature [°C]	Signal output temperature	Measurement range humidity [% r.h.]	Display	Dimensions (WxHxD) [mm]	Stock no.	Product no.
0...50	Active LG-Ni1000	0...100		55 x 55 x 12	S55720-S138	**AQR2534ANW**
				55 x 55 x 12	S55720-S137	**AQR2530NNW**
0...50	Active			55 x 55 x 12	S55720-S136	**AQR2532NNW**
0...50	Active	0...100		55 x 55 x 12	S55720-S141	**AQR2535NNW**
0...50	Active	0...100	CO_2 indicator by LED	55 x 55 x 38	S55720-S219	**AQR2535NNWQ**

The matching design frame must be ordered separately.

Frames for front modules AQR253..

Product Title	Data sheet	Stock no.	Product no.
Frame DELTA line for front module	N1410	S55720-S158	**AQR2510NFW**
Frame DELTA azio for front module	N1410	S55720-S160	**AQR2510NGW**
Frame DELTA miro for front module	N1410	S55720-S159	**AQR2510NHW**

Base modules with integrated CO_2 and VOC measurement

AQR2548..

- Base module with maintenance-free CO_2/VOC sensing element to plug onto a front module

Data sheet	N1410
Operating voltage	AC 24 V DC 15...36 V
Analog output, signal	DC 0...10 V DC 2...10 V DC 0...5 V DC 0...20 mA DC 4...20 mA DC 0...10 mA
Connection, electrical	Screw terminals
Digital outputs	CO: 1 Potential-free
Warranty	60 Months

Range overview AQR2548..

Measuring range	Mechanical design	Dimensions (WxHxD) [mm]	Stock no.	Product no.
0...2000 ppm CO_2 0...100 % VOC	EU (CEE/VDE)	71 x 71 x 45	S55720-S148	**AQR2548NF**

7

QPM..

Duct air quality sensor CO_2/ temperature / rel. humidity / VOC

Note: Not suited for safety-related applications!

Data sheet	N1962
Operating voltage	AC 24 V DC 15...35 V
Power consumption	2 VA
Analog output, signal	DC 0...10 V DC 0...5 V DC 4...20 mA
Permissible air velocity	≤ 10 m/s
Ambient temperature, operation	-5...45 °C
Connection, electrical	Screw terminals
Degree of protection	IP54
Dimensions (W x H x D)	80 x 88 x 274 mm
Warranty	60 Months

Range overview QPM..

Measuring range	Measuring range, temperature [°C]	Measurement range humidity [% r.h.]	Immersion length [mm]	Display	Stock no.	Product no.
0...100 % VOC			70...135		S55720-S123	**QPM1100**
0...100 % VOC	0...50 -35...35		100...165		S55720-S519	**QPM1160**
0...100 % VOC	0...50 -35...35	0...95	100...165		S55720-S520	**QPM1162**
0...2000 ppm CO_2			70...135		BPZ:QPM2100	**QPM2100**
0...2000 ppm CO_2 0...100 % VOC			70...135		BPZ:QPM2102	**QPM2102**
0...2000 ppm CO_2 0...100 % VOC			70...135	LCD	BPZ:QPM2102D	**QPM2102D**
0...2000 ppm CO_2	0...50 -35...35		100...165		BPZ:QPM2160	**QPM2160**
0...2000 ppm CO_2	0...50 -35...35		100...165	LCD	BPZ:QPM2160D	**QPM2160D**
0...2000 ppm CO_2	0...50 -35...35	0...95	100...165		BPZ:QPM2162	**QPM2162**
0...2000 ppm CO_2	0...50 -35...35	0...95	100...165	LCD	BPZ:QPM2162D	**QPM2162D**
0...2000 ppm CO_2 0...100 % VOC	0...50 -35...35	0...95	100...165		S55720-S521	**QPM2163**
0...2000 ppm CO_2			100...165		S55720-S124	**QPM2180**

The passive temperature element within the QPM2180 is freely selectable, enclosed in the delivery are LG-Ni1000, Pt1000, Pt100, NTC 10kOhm.

Duct air quality sensor CO_2 / temperature / rel. humidity / VOC; Modbus

QPM../MO

Note: Not suited for safety-related applications!

Data sheet	A6V11610641
Operating voltage	AC 24 V DC 15...35 V
Power consumption	2 VA
Permissible air velocity	≤ 10 m/s
Ambient temperature, operation	-5...45 °C
Connection, electrical	Screw terminals
Degree of protection	IP54
Dimensions (W x H x D)	80 x 88 x 274 mm
Communication	Modbus RTU (RS-485)
Warranty	60 Months

Range overview QPM../MO

Measuring range	Measuring range, temperature [°C]	Measurement range humidity [% r.h.]	Immersion length [mm]	Stock no.	Product no.
0...2000 ppm CO_2 0...100 % VOC			70...135	S55720-S469	**QPM2102/MO**
0...2000 ppm CO_2	-35...50		100...165	S55720-S470	**QPM2150/MO**
0...2000 ppm CO_2	-35...50	0...100	100...165	S55720-S471	**QPM2152/MO**
0...2000 ppm CO_2 0...100 % VOC	-35...50	0...100	100...165	S55720-S530	**QPM2153/MO**

Duct air quality sensor CO_2 / temperature (Basic)

QPM1..4

Note: Not suited for safety-related applications!

Data sheet	A6V101101338
Operating voltage	AC 24 V DC 15...35 V
Analog output, signal	DC 0...10 V DC 4...20 mA
Degree of protection	IP54
Dimensions (W x H x D)	80 x 88 x 278 mm
Warranty	60 Months

Range overview QPM1..4

Measuring range [ppm CO_2]	Measuring range, temperature [°C]	Immersion length [mm]	Stock no.	Product no.
0...2000		135	S55720-S455	**QPM1104**
0...2000	0...50	165	S55720-S456	**QPM1164**

AQS2700

Sensor module for replacement

Sensor module for replacement for QSA2700 or QSA2700D

Data sheet	A6V11160938
Warranty	60 Months

Stock no.	Product no.
S55720-S459	**AQS2700**

QSA2700

Fine dust sensor, 0-10V & Modbus

Room sensor for detection of PM2.5 and PM10

Data sheet	A6V11160938
Operating voltage	AC/DC 24 V DC 24 V
Connection cable	Micro USB
Analog outputs	DC 0...10 V
Display	3-color LED service indication
Communication	Modbus RTU (RS-485)
Degree of protection	IP30
Dimensions (W x H x D)	86 x 86 x 30 mm
Warranty	60 Months

Stock no.	Product no.
S55720-S457	**QSA2700**

QSA2700D

Fine dust sensor +display, 0-10V, Modbus

Room sensor with LCD display for detection of PM2.5 and PM10

Data sheet	A6V11160938
Operating voltage	AC 24 V DC 24 V
Connection cable	Micro USB
Analog outputs	DC 0...10 V
Display	LCD; 2.4 "
Communication	Modbus RTU (RS-485)
Degree of protection	IP30
Dimensions (W x H x D)	86 x 86 x 30 mm
Warranty	60 Months

Stock no.	Product no.
S55720-S458	**QSA2700D**

Duct fine dust sensor PM — QSM2100

Duct sensor for detection of PM2.5 and PM10

Data sheet	A6V11893002
Operating voltage	AC 24 V DC 15...35 V
Analog output, signal	DC 0...10 V DC 0...5 V DC 4...20 mA
Degree of protection	IP54
Dimensions (W x H x D)	298 x 80 x 88 mm
Warranty	60 Months

Stock no.	Product no.
S55720-S491	**QSM2100**

Duct fine dust sensor PM, rel. humidity and temperature — QSM2162

Duct sensor for detection of PM2.5, PM10, rel. humidity and temperature

Data sheet	A6V11893002
Operating voltage	AC 24 V DC 15...35 V
Analog output, signal	DC 0...10 V DC 0...5 V DC 4...20 mA
Measuring range, temperature	0...50 °C -35...+35 °C
Measurement range humidity	0...100 % r.h.
Degree of protection	IP54
Dimensions (W x H x D)	328 x 80 x 88 mm
Warranty	60 Months

Stock no.	Product no.
S55720-S492	**QSM2162**

7

Sensor module for replacement — AQS2100

Sensor module for replacement for QSM21..

Warranty	60 Months

Stock no.	Product no.
S55720-S493	**AQS2100**

QNA...

Indoor Air Quality Multi-Sensor

Indoor Air Quality multi-sensor
- A 7in1 sensor acquires value of temperature, r.H., CO2, VOC, particle matter as well as sound pressure and illuminance as complementary info.
- It is compliant with WELL, LEAD building certification in term of people's wellbeing. One typical use case is to monitor the indoor air quality status in WELL certified buildings.
- Available with (depending on the variant chosen),
BACnet IP
BACnet MSTP
LoRaWAN for EU/US/AU

Measuring range, temperature	0...90 °C
Measurement range humidity	0...100 % r.h.
Measuring range	400...5000 ppm CO_2
Measurement accuracy	±3 % r.h.±3 % r.h.
Ambient temperature, operation	-5...+40 °C
Display	LED
Communication	BACnet IP, BACnet MSTP, LoRaWAN

Range overview QNA...

Product Title	Dimensions (WxHxD) [mm]	Stock no.	Product no.
IAQ multi-sensor BACnet IP, RESET Certified	98 x 98 x 34	S55720-S572	QNA2700D.BA1
IAQ multi-sensor BACnet MSTP, RESET Certified	98 x 98 x 34	S55720-S573	QNA2700D.BA2
IAQ multi-sensor LoRaWAN AU, RESET Certified	98 x 98 x 34	S55720-S576	QNA2820D.AU
IAQ multi-sensor LoRaWAN EU, RESET Certified	98 x 98 x 34	S55720-S574	QNA2820D.EU
IAQ multi-sensor LoRaWAN US, RESET Certified	98 x 98 x 34	S55720-S575	QNA2820D.US

Differential pressure sensor, DC 0...10 V

QBM2030..

With pressure-linear characteristic.
For use with air or nonaggressive gases, for general HVAC applications. With diaphragm sensing element and selectable pressure measuring ranges.

Supplied complete with set of 2 air duct connectors
and PVC tube of 2 m.

Data sheet	N1910_01
Operating voltage	AC 24 V DC 13.5...33 V
Power consumption	0.5 VA
Analog output, signal	DC 0...10 V
Time constant	1 s
Pressure connection	Connection branch, 6.2 mm dia.
Connection, electrical	Screw terminals
Degree of protection	IP42
Dimensions (W x H x D)	92 x 94 x 49 mm
Warranty	60 Months

Range overview QBM2030..

Measuring range, pressure [Pa]	Stock no.	Product no.
-50...50 -100...100 0...100	S55720-S244	**QBM2030-1U**
0...200 0...250 0...500	S55720-S245	**QBM2030-5**
0...1000 0...1500 0...3000	S55720-S246	**QBM2030-30**

Note on max. permissible pressure: overpressure on one side.

QBM2130-1U

Differential pressure sensor, -50...50 Pa, -100...100 Pa, 0...100 Pa, 4-20mA

With pressure-linear characteristic.
For use with air or nonaggressive gases, for general HVAC applications. With diaphragm sensing element and selectable pressure measuring ranges.

Supplied complete with set of 2 air duct connectors
and PVC tube of 2 m.

Data sheet	A6V13420863
Operating voltage	AC 24 V DC 13.5...33 V
Power consumption	0.5 VA
Analog output, signal	DC 4...20 mA
Sensing element	Pressure diaphragm
Time constant	1 s
Pressure connection	Connecting branch∅ 6.2 mm
Connection, electrical	Screw terminals
Medium temperature	0...70 °C
Max. overpressure	0.05 bar
Measuring range, pressure	-50...50 Pa -100...100 Pa 0...100 Pa
Degree of protection	IP42
Dimensions (W x H x D)	92 x 94 x 49 mm
Warranty	60 Months

Stock no.	Product no.
S55720-S559	QBM2130-1U

QBM2130-30

Differential pressure sensor, 0...1000 Pa, 0...1500 Pa, 0...3000 Pa, 4-20mA

With pressure-linear characteristic.
For use with air or nonaggressive gases, for general HVAC applications. With diaphragm sensing element and selectable pressure measuring ranges.

Supplied complete with set of 2 air duct connectors
and PVC tube of 2 m.

Data sheet	A6V13420863
Operating voltage	AC 24 V DC 13.5...33 V
Power consumption	0.5 VA
Analog output, signal	DC 4...20 mA
Sensing element	Pressure diaphragm
Time constant	1 s
Pressure connection	Connecting branch∅ 6.2 mm
Connection, electrical	Screw terminals
Medium temperature	0...70 °C
Max. overpressure	0.1 bar
Measuring range, pressure	0...1000 Pa 0...1500 Pa 0...3000 Pa
Degree of protection	IP42
Dimensions (W x H x D)	92 x 94 x 49 mm
Warranty	60 Months

Stock no.	Product no.
S55720-S561	QBM2130-30

Differential pressure sensor, 0...200 Pa, 0...250 Pa, 0...500 Pa, 4-20mA

QBM2130-5

SIEMENS

With pressure-linear characteristic.
For use with air or nonaggressive gases, for general HVAC applications. With diaphragm sensing element and selectable pressure measuring ranges.

Supplied complete with set of 2 air duct connectors and PVC tube of 2 m.

Data sheet	A6V13420863
Operating voltage	AC 24 V DC 13.5...33 V
Power consumption	0.5 VA
Analog output, signal	DC 4...20 mA
Sensing element	Pressure diaphragm
Time constant	1 s
Pressure connection	Connecting branch∅ 6.2 mm
Connection, electrical	Screw terminals
Medium temperature	0...70 °C
Max. overpressure	0.1 bar
Measuring range, pressure	0...200 Pa 0...250 Pa 0...500 Pa
Degree of protection	IP42
Dimensions (W x H x D)	92 x 94 x 49 mm
Warranty	60 Months

Stock no.	Product no.
S55720-S560	QBM2130-5

Air duct differential pressure sensor, 0...300 Pa for VAV

QBM3460-3

For use with air or nonaggressive gases

Data sheet	N1925
Analog output, signal	DC 0...10 V
Operating voltage	AC 24 V DC 13.5...33 V
Power consumption	0.24 VA
Sensing element	Pressure diaphragm
Response time	<20 ms
Pressure connection	Connecting branch∅ 6.2 mm
Connection, electrical	Spring terminals
Measuring range, pressure	0...300 Pa
Degree of protection	IP54
Dimensions (W x H x D)	188 x 79 x 114 mm
Warranty	60 Months

Stock no.	Product no.
S55720-S118	**QBM3460-3**

Differential pressure sensor air and non-aggressive gas QBM..

QBM3..

Air duct differential pressure sensor

For use with air or nonaggressive gases, for extremely demanding accuracy and high requirements. With diaphragm sensing element.
Availabe with switchable pressure-linear or extracting-the-root characteristic and digital display. With extracting-the-root characteristic, the pressure measuring range is adjustable.

CE-, UL listed.
Supplied complete with PVC connecting tube of 2 m.

Data sheet	N1916
Response time	<20 ms
Pressure connection	Connection branch, 6.2 mm dia.
Connection, electrical	Screw terminals
Degree of protection	IP54
Dimensions (W x H x D)	101 x 86 x 49 mm
Warranty	60 Months

Range overview QBM3..

Measuring range, pressure [Pa]	Analog output, signal	Operating voltage [V]	Display	Max. overpressure [bar]	Stock no.	Product no.
0...100	DC 0...10 V	AC 24 DC 13.5...33		0.05	S55720-S234	**QBM3020-1**
0...100	DC 4...20 mA				S55720-S443	**QBM3120-1**
-50...50	DC 4...20 mA	DC 8...33	LCD	0.05	S55720-S569	**QBM3120-1UD**
0...100	DC 0...10 V	AC 24 DC 13.5...33	LCD	0.05	S55720-S239	**QBM3020-1D**
0...100	DC 4...20 mA	DC 8...33	LCD	0.05	S55720-S448	**QBM3120-1D**
-50...50	DC 0...10 V	AC 24 DC 13.5...33			S55720-S233	**QBM3020-1U**
-50...50	DC 4...20 mA				S55720-S442	**QBM3120-1U**
0...300	DC 0...10 V	AC 24 DC 13.5...33			S55720-S235	**QBM3020-3**
0...300	DC 4...20 mA				S55720-S444	**QBM3120-3**
0...300	DC 0...10 V	AC 24 DC 13.5...33	LCD	0.05	S55720-S240	**QBM3020-3D**
0...300	DC 4...20 mA	DC 8...33	LCD	0.05	S55720-S449	**QBM3120-3D**
0...500	DC 0...10 V	AC 24 DC 13.5...33			S55720-S236	**QBM3020-5**
0...500	DC 4...20 mA				S55720-S445	**QBM3120-5**
0...500	DC 0...10 V	AC 24 DC 13.5...33	LCD	0.1	S55720-S241	**QBM3020-5D**
0...500	DC 4...20 mA	DC 8...33	LCD	0.1	S55720-S450	**QBM3120-5D**
0...1000	DC 0...10 V	AC 24 DC 13.5...33			S55720-S237	**QBM3020-10**
0...1000	DC 4...20 mA				S55720-S446	**QBM3120-10**
0...1000	DC 0...10 V	AC 24 DC 13.5...33	LCD	0.1	S55720-S242	**QBM3020-10D**
0...1000	DC 4...20 mA	DC 8...33	LCD	0.1	S55720-S451	**QBM3120-10D**
0...2500	DC 0...10 V	AC 24 DC 13.5...33			S55720-S238	**QBM3020-25**
0...2500	DC 4...20 mA				S55720-S447	**QBM3120-25**
0...2500	DC 0...10 V	AC 24 DC 13.5...33	LCD	0.1	S55720-S243	**QBM3020-25D**
0...2500	DC 4...20 mA	DC 8...33	LCD	0.1	S55720-S452	**QBM3120-25D**

Modus differential pressure sensor with I/O extension

QBM3700..

Differential pressure sensor with I/O extension, designed for Modus (RTU) communication networks, 2 AI, 2 AO

Data sheet	A6V11684000
Operating voltage	AC/DC 24 V ±15 %
Power consumption	<2 VA
Analog output, signal	DC 0...10 V
Analog outputs, number	2
Analog inputs, number	2
Degree of protection	IP54
Dimensions (W x H x D)	146 x 81.9 x 60 mm
Communication	Modbus RTU (RS-485)
Warranty	60 Months

Range overview QBM3700..

Measuring range, pressure [Pa]	Stock no.	Product no.
0...500	S55720-S487	**QBM3700-5/MO**
0...1250	S55720-S485	**QBM3700-13/MO**
0...2500	S55720-S486	**QBM3700-25/MO**

Differential pressure sensor air and non-aggressive gas QBM..

QBM400..

Air duct differential pressure sensor with calibration certificate

Technical data and accessories identical to QBM3...
With plug-in connection.

Data sheet	N1919_01
Mounting position	Membrane vertical, pressure connection nipples at the bottom
Degree of protection	IP54
Dimensions (W x H x D)	186 x 86 x 49 mm
Warranty	60 Months

Range overview QBM400..

Measuring range, pressure [Pa]	Stock no.	Product no.
0...100	S55720-S247	**QBM4000-1**
0...300	S55720-S248	**QBM4000-3**
0...1000	S55720-S249	**QBM4000-10**
0...2500	S55720-S250	**QBM4000-25**

Note on max. permissible pressure: overpressure on one side.

Air duct differential pressure sensor, DC 4...20 mA, with calibration certificate

QBM410..

For use with air and nonaggressive gases. For extremely demanding accuracy and high requirements.
With diaphragm sensing element.

CE-, UL listed.
Supplied complete with PVC connecting tube of 2 m.

Accessories for QBM41 are identical to those for QBM3...

Data sheet	N1919_01
Operating voltage	DC 8...33 V
Analog output, signal	DC 4...20 mA
Pressure connection	Connecting branch, 6.2 mm dia.
Connection, electrical	Screw terminals
Mounting position	Membrane vertical, pressure connection nipples at the bottom
Degree of protection	IP54
Dimensions (W x H x D)	186 x 86 x 49 mm
Warranty	60 Months

Range overview QBM410..

Measuring range, pressure [Pa]	Display	Max. overpressure [bar]	Stock no.	Product no.
-50...50	no		S55720-S251	**QBM4100-1U**
0...100	LCD	0.05	S55720-S252	**QBM4100-1D**

Note on max. permissible pressure: overpressure on one side.

Accessories for QBM..

Product Title	Data sheet	Stock no.	Product no.
Mounting bracket for differenential pressure sensor for air	N1590	BPZ:AQB2000	**AQB2000**
Top hat rail adapter for differential pressure sensor for air	N1590	BPZ:AQB21.2	**AQB21.2**
Air duct probe for simple, quick and airtight mounting	N1589	BPZ:FK-PZ1	**FK-PZ1**
Air duct probe for accurate measurements	N1589	BPZ:FK-PZ2	**FK-PZ2**
Air duct probe for differential pressure sensor, fixed length	N1589	BPZ:FK-PZ3	**FK-PZ3**

Differential pressure monitor QBM..

QBM81..

Differential pressure monitor

Used as a flow switch or filter monitor in air ducts.

Supplied complete with set of 2 air duct connectors (plastic) and 2 m long PVC tube.

Data sheet	N1552
Digital outputs	1-pin Potential-free Switchover contact
Permissible operating pressure	7500 Pa
Ambient temperature, operation	-30...85 °C
Mounting position	Diaphragm vertical, pressure connection pointing downward
Digital output, switching voltage	DC 24 V / AC 24...250 V
Digital output, switching current	0.01...5 (3) A
Pressure connection	Connection branch, 6.2 mm dia.
Degree of protection	IP54
Dimensions (Ø x L)	81 x 90 mm
Warranty	60 Months

Range overview QBM81..

Measuring range, pressure [Pa]	Stock no.	Product no.
20...300	BPZ:QBM81-3	**QBM81-3**
50...500	BPZ:QBM81-5	**QBM81-5**
100...1000	BPZ:QBM81-10	**QBM81-10**
500...2000	S55720-S125	**QBM81-20**
1000...5000	S55720-S126	**QBM81-50**

Accessories for QBM81..

Product Title	Data sheet	Stock no.	Product no.
Air duct probe for simple, quick and airtight mounting	N1589	BPZ:FK-PZ1	**FK-PZ1**
Air duct probe for accurate measurements	N1589	BPZ:FK-PZ2	**FK-PZ2**
Air duct probe for differential pressure sensor, fixed length	N1589	BPZ:FK-PZ3	**FK-PZ3**

Pressure sensor for neutral and slightly aggressive liquids and gases (0...10 V)

QBE2003-P..

With threaded connection G½" and plug DIN EN175301-803A.

Suited for use with oil-containing media.

Data sheet	A6V10432494
Time constant	<2 ms
Pressure connection	External thread G½ "
Connection, electrical	Plug-in connection
Medium temperature	-15...125 °C
Connecting thread	G ½"
Max. permissible pressure	2.5 x scale end value (FS)
Mounting position	Any
Degree of protection	IP65
Dimensions (Ø x L)	24 x 101 mm
Warranty	60 Months

Range overview QBE2003-P..

Analog output, signal [V]	Operating voltage [V]	Measuring range, pressure	Max. overpressure	Stock no.	Product no.
DC 0...10	AC 24 DC 12...33	0...1 bar 0...100 kPa	2.5 x scale end value of measuring range	S55720-S290	**QBE2003-P1**
DC 0...10	AC 24 DC 12...33	0...1.6 bar 0...160 kPa	2.5 x scale end value of measuring range	S55720-S291	**QBE2003-P1.6**
DC 0...10	AC 24 DC 12...33	0...2.5 bar 0...250 kPa	2.5 x scale end value of measuring range	S55720-S292	**QBE2003-P2.5**
DC 0...10	AC 24 DC 12...33	0...4 bar 0...400 kPa	2.5 x scale end value of measuring range	S55720-S293	**QBE2003-P4**
DC 0...10	AC 24 DC 12...33	0...6 bar 0...600 kPa	2.5 x scale end value of measuring range	S55720-S294	**QBE2003-P6**
DC 0...10	AC 24 DC 12...33	0...10 bar 0...1 MPa	2.5 x scale end value of measuring range	S55720-S295	**QBE2003-P10**
DC 0...10	AC 24 DC 12...33	0...16 bar 0...1.6 MPa	2.5 x scale end value of measuring range	S55720-S296	**QBE2003-P16**
DC 0...10	AC 24 DC 12...33	0...25 bar 0...2.5 MPa	2.5 x scale end value of measuring range	S55720-S297	**QBE2003-P25**
DC 0...10	AC 24 DC 12...33	0...40 bar 0...4 MPa	2.5 x scale end value of measuring range	S55720-S298	**QBE2003-P40**
DC 0...10	AC 24 DC 12...33	0...60 bar 0...6 MPa	2.5 x scale end value of measuring range	S55720-S299	**QBE2003-P60**

QBE2103-P..

Pressure sensor for neutral and slightly aggressive liquids and gases (4...20 mA)

With threaded connection G½" and plug DIN EN175301-803A.

Suited for use with oil-containing media.

Data sheet	A6V10432494
Time constant	<2 ms
Pressure connection	External thread G½ "
Connection, electrical	Plug-in connection
Medium temperature	-15...125 °C
Connecting thread	G ½"
Max. permissible pressure	2.5 x scale end value (FS)
Mounting position	Any
Degree of protection	IP65
Dimensions (Ø x L)	24 x 101 mm
Warranty	60 Months

Range overview QBE2103-P..

Analog output, signal [mA]	Operating voltage [V]	Measuring range, pressure	Max. overpressure [bar]	Stock no.	Product no.
DC 4...20	DC 7...33	0...1 bar 0...100 kPa		S55720-S300	**QBE2103-P1**
DC 4...20	DC 7...33	0...1.6 bar 0...160 kPa		S55720-S301	**QBE2103-P1.6**
DC 4...20	DC 7...33	0...2.5 bar 0...250 kPa		S55720-S302	**QBE2103-P2.5**
DC 4...20	DC 7...33	0...4 bar 0...400 kPa		S55720-S303	**QBE2103-P4**
DC 4...20	DC 7...33	0...6 bar 0...600 kPa		S55720-S304	**QBE2103-P6**
DC 4...20	DC 7...33	0...10 bar 0...1 MPa	25	S55720-S305	**QBE2103-P10**
DC 4...20	DC 7...33	0...16 bar 0...1.6 MPa		S55720-S306	**QBE2103-P16**
DC 4...20	DC 7...33	0...25 bar 0...2.5 MPa		S55720-S307	**QBE2103-P25**
DC 4...20	DC 7...33	0...40 bar 0...4 MPa		S55720-S308	**QBE2103-P40**
DC 4...20	DC 7...33	0...60 bar 0...6 MPa		S55720-S309	**QBE2103-P60**

Accessories for QBE200..-P.. and QBE210..-P..

Product Title	Data sheet	Stock no.	Product no.
Connection kit to mount QBE2x03..	A6V10434028	S55720-S549	**AQB2005**
Mounting bracket for pressure sensor QBE2x03..	A6V10434028	S55720-S318	**AQB2004**

Differential pressure sensor for liquids and gases

QBE61.3-DP..

For slightly aggressive liquids and gases, highly resistant to overpressure. Suitable for use with hot water and chilled water.
With threaded connections G½" and wall mounting bracket.

Not suitable for use with ammonia or freones.

For a smaller measuring range see QBE63-DP...
Note on max. permissible pressure: overpressure on one side.

Data sheet	N1923
Operating voltage	AC 24 V DC 18...33 V
Analog output, signal	DC 0...10 V
Pressure connection	External thread G ½ "
Connection, electrical	Screw-free terminals
Medium temperature	-15...80 °C
PN class	PN 40
Mounting position	Any
Degree of protection	IP54
Dimensions (W x H x D)	126 x 135 x 60 mm
Warranty	60 Months

Range overview QBE61.3-DP..

Measuring range, pressure [bar]	Max. permissible pressure [bar]	Max. overpressure [bar]	Stock no.	Product no.
0...2	12	-12...12	BPZ:QBE61.3-DP2	**QBE61.3-DP2**
0...5	20	-20...20	BPZ:QBE61.3-DP5	**QBE61.3-DP5**
0...10 0...	20	-20...20	BPZ:QBE61.3-DP10	**QBE61.3-DP10**

7

Pressure sensors for liquids and gases QBE..

QBE63-DP..

Differential pressure sensors for liquids and gase (DC 0...10 V)

For slightly aggressive liquids and gases, highly resistant to overpressure. With threaded connections G1/8"
Supplied complete with mounting bracket.

Not suitable for use with ammonia or freones.

Data sheet	N1920
Operating voltage	AC 24 V DC 20...30 V
Analog output, signal	DC 0...10 V
Pressure connection	Internal thread G 1/8 "
Connection, electrical	Screw terminals
Medium temperature	-10...80 °C
Mounting position	any
Degree of protection	IP65
Dimensions (Ø x L)	65 x 94 mm
Warranty	60 Months

Range overview QBE63-DP..

Measuring range, pressure [kPa]	Max. permissible pressure [bar]	Stock no.	Product no.
0...10	10	BPZ:QBE63-DP01	**QBE63-DP01**
0...20	10	BPZ:QBE63-DP02	**QBE63-DP02**
0...50	20	BPZ:QBE63-DP05	**QBE63-DP05**
0...100	20	BPZ:QBE63-DP1	**QBE63-DP1**

Note on max. permissible pressure: pressure on one side.

Differential pressure sensors for liquids and gase (0...10 V) QBE3000..

For slightly aggressive liquids and gases. With threaded connections G1/8".
Including mounting bracket and 2 screwed fittings for copper pipe, 6 mm dia.

Not suitable for use with ammonia or freones.

Data sheet	N1922
Operating voltage	AC 24 V DC 18...33 V
Analog output, signal	DC 0...10 V
Pressure connection	Internal thread G 1/8 "
Connection, electrical	Plug-in connection
Medium temperature	-15...80 °C
Degree of protection	IP65
Warranty	60 Months

Range overview QBE3000..

Measuring range, pressure	Max. permissible pressure [bar]	Max. overpressure [bar]	Stock no.	Product no.
0...1 bar 0...100 kPa	25	20	S55720-S173	**QBE3000-D1**
0...1.6 bar 0...160 kPa	25	32	S55720-S174	**QBE3000-D1.6**
0...2.5 bar 0...250 kPa	25		S55720-S175	**QBE3000-D2.5**
0...4 bar 0...400 kPa	25	80	S55720-S176	**QBE3000-D4**
0...6 bar 0...600 kPa	25	120	S55720-S186	**QBE3000-D6**
0...10 bar 0...1 MPa	50	200	S55720-S177	**QBE3000-D10**
0...16 bar 0...1.6 MPa	50	320	S55720-S178	**QBE3000-D16**

Note on max. permissible pressure: pressure on both sides.

QBE3100..

Differential pressure sensors for liquids and gase (4...20 mA)

For slightly aggressive liquids and gases. With threaded connections G1/8".
Including mounting bracket and 2 screwed fittings for copper pipe, 6 mm dia.

Not suitable for use with ammonia or freones.

Data sheet	N1922
Operating voltage	DC 11...33 V
Analog output, signal	DC 4...20 mA
Pressure connection	Internal thread G 1/8 "
Connection, electrical	Plug-in connection
Medium temperature	-15...80 °C
Degree of protection	IP65
Warranty	60 Months

Range overview QBE3100..

Measuring range, pressure	Max. permissible pressure [bar]	Max. overpressure [bar]	Stock no.	Product no.
0...1 bar 0...100 kPa	25		S55720-S179	**QBE3100-D1**
0...1.6 bar 0...160 kPa	25		S55720-S180	**QBE3100-D1.6**
0...2.5 bar 0...250 kPa	25		S55720-S181	**QBE3100-D2.5**
0...4 bar 0...400 kPa	25		S55720-S182	**QBE3100-D4**
0...6 bar 0...600 kPa	25		S55720-S187	**QBE3100-D6**
0...10 bar 0...1 MPa	50	200	S55720-S183	**QBE3100-D10**
0...16 bar 0...1.6 MPa	50	320	S55720-S184	**QBE3100-D16**

Note on max. permissible pressure: pressure on both sides.

Accessories for QBE63-DP.. and QBE3..

Product Title	Data sheet	Stock no.	Product no.
Connection kit to mount QBE63../64.., QBE3..	N1922	S55720-S117	**AQB2002**

QBE1900-P..

Pressure switch QBE1900-Pxx

For liquid and gaseous media
- Mechanical measuring system
- Pressure limiter / designed for high- or low-pressure protection
- Starting current up to 96 A
- Automatic or manual reset
- External thread G½"
- Test function
- Sealable

Data sheet A6V12204470

Type overview QBE1900-P..

Measuring range [bar]	Stock no.	Product no.
6...32	S55720-S534	QBE1900-P32
6...32	S55720-S533	QBE1900-P32M
-0.3...7	S55720-S532	QBE1900-P7
-0.3...7	S55720-S531	QBE1900-P7M

QBE2004-P..U

Pressure sensor for refrigerants (0...10 V)

With internally threaded pressure connection UNF7/16-20.

For use with all media, including ammonia.

Data sheet	A6V10434676
Current consumption	<4 mA
Time constant	<2 ms
Pressure connection	Internal thread UNF7/16-20
Connection cable	3-wire
Cable length	1.5 m
Connection, electrical	Cable
Medium temperature	-40...135 °C
Max. permissible pressure	3 x scale end value (FS)
Mounting position	Any
Degree of protection	IP67
Dimensions (Ø x L)	24 x 68 mm
Warranty	60 Months

Range overview QBE2004-P..

Analog output, signal [V]	Operating voltage [V]	Measuring range, pressure	Max. overpressure [bar]	Stock no.	Product no.
DC 0...10	AC 24 DC 16...33	-1...9 bar -100...900 kPa	27	S55720-S310	**QBE2004-P10U**
DC 0...10	AC 24 DC 16...33	-1...24 bar -100...2400 kPa		S55720-S311	**QBE2004-P25U**
DC 0...10	AC 24 DC 16...33	-1...29 bar -100...2900 kPa		S55720-S312	**QBE2004-P30U**
DC 0...10	AC 24 DC 16...33	-1...59 bar -100...5900 kPa		S55720-S313	**QBE2004-P60U**

Pressure sensors for refrigerants (4...20 mA)

QBE2104-P..U

With internally threaded pressure connection UNF7/16-20.

For use with all media, including ammonia.

Data sheet	A6V10434676
Time constant	<2 ms
Pressure connection	Internal thread UNF7/16-20
Connection cable	2-wire
Cable length	1.5 m
Connection, electrical	Cable
Medium temperature	-40...135 °C
Connecting thread	G ½"
Max. permissible pressure	3 x scale end value (FS)
Mounting position	Any
Degree of protection	IP67
Dimensions (Ø x L)	24 x 68 mm
Warranty	60 Months

Range overview QBE2104-P..

Analog output, signal [mA]	Operating voltage [V]	Measuring range, pressure	Max. overpressure [bar]	Stock no.	Product no.
DC 4...20	DC 8...33	-1...9 bar -100...900 kPa	27	S55720-S314	**QBE2104-P10U**
DC 4...20	DC 8...33	-1...24 bar -100...2400 kPa	72	S55720-S315	**QBE2104-P25U**
DC 4...20	DC 8...33	-1...29 bar -100...2900 kPa	87	S55720-S316	**QBE2104-P30U**
DC 4...20	DC 8...33	-1...59 bar -100...5900 kPa	177	S55720-S317	**QBE2104-P60U**

Accessories for QBE200..-P..U and QBE210..-P..U

Product Title	Data sheet	Stock no.	Product no.
Connection set, thread ½" for pressure sensor for refrigerant	N1907	BPZ:FT-PZ1	**FT-PZ1**

QVE1900

Flow switch for use in hydraulic systems, PN10, DN32...200

For monitoring operation of systems using liquids or gases.

Data sheet	N1592
Digital output, switching voltage	250 VAC
Digital output, switching current	15 (8) A
Connection, electrical	Screw terminals
Nominal size, piping	DN32 - DN200
Connecting thread	R 1"
Digital outputs	1-pin Potential-free
Medium temperature	-20...120 °C
PN class	PN 10
Ambient temperature, operation	-20...85 °C
Material, valve body	Brass
Degree of protection	IP65
Dimensions (W x H x D)	108 x 70 x 132 mm
Warranty	60 Months

Stock no.	Product no.
BPZ:QVE1900	**QVE1900**

QVE1901

Flow switch for use in hydraulic systems, PN25, DN20...200

For monitoring operation of systems using liquids or gases.

Maximum switching capacity AC 26 VA, DC 20 W

Data sheet	N1594
Digital output, switching voltage	230 VAC, 48 VDC
Digital output, switching current	1 A
Connection, electrical	Screw terminals
Type of fixing	Thread G ½ "
Nominal size, piping	DN20 - DN200
Connecting thread	G ½"
Digital outputs	Potential-free
Medium temperature	-20...110 °C
PN class	PN 25
Ambient temperature, operation	-20...80 °C
Material, valve body	Brass
Degree of protection	IP65
Dimensions (W x H x D)	120 x 38 x 92 mm
Warranty	60 Months

Stock no.	Product no.
BPZ:QVE1901	**QVE1901**

Flow switch for liquids in piping DN 10...25

QVE1902.0..

For monitoring the flow of liquid medium in HVAC plants

Maximum switching capacity AC 26 VA, DC 20 W

Data sheet	N1596
Digital output, switching voltage	AC 230 V, DC 48 V
Digital output, switching current	1 A
Type of fixing	Thread
Digital outputs	1-pin Potential-free reed contact
Medium temperature	-20...100 °C
Ambient temperature, operation	0...70 °C
Material, valve body	Brass
Degree of protection	IP65
Warranty	60 Months

Range overview QVE1902.0..

Con- nect. thread	Nominal size, piping	Con- nect. thread ["]	Qmax [l/min]	Stock no.	Product no.
G ⅜"	DN 10	G⅜	20	S55720-S199	**QVE1902.010**
G ½"	DN 15	G½	30	S55720-S200	**QVE1902.015**
G ¾"	DN 20	G¾	80	S55720-S201	**QVE1902.020**
G 1"	DN 25	G1	130	S55720-S202	**QVE1902.025**

Communicative Air Flow Pressure Sensor (250 Pa / 1"WC)

DXA.S04P1

The sensor is used to measure airflow for room pressurization and fume hood application:
- Differential Pressure (velocity) is messured by a diaphragm type transducer
- Communicates with the controller over a dedicated RS-485 digital bus (SCOM)
- Maintenance-free sensor with auto zero feature to calibrate sensor

Operating voltage	AC 24 V
Degree of protection	IP20
Dimensions (W x H x D)	118 x 47.2 x 103.6 mm
Warranty	12 Months

Stock no.	Product no.
S55376-C139	**DXA.S04P1**

QVM62.1

Duct sensor for air velocity

For measuring air velocities or volumetric flow in air ducts. Suited for primary plant (presetting the volumetric flow).

Sensor detached, ready wired, including pipe extension for different immersion lengths and mounting flange.

Data sheet	N1932
Operating voltage	AC 24 V DC 24 V
Power consumption	5 VA
Measuring range	0...10 m/s 0...15 m/s 0...5 m/s
Measurement accuracy	At 20 °C, 45 % r.h., 1023 hPa: ±0.65 m/s
Connection, electrical	Screw terminals
Cable length	1 m
Immersion length	30...300 mm
Analog output, signal	DC 4...20 mA DC 0...10 V
Degree of protection	IP42
Dimensions (W x H x D)	86 x 43 x 117 mm
Warranty	60 Months

Stock no.	Product no.
BPZ:QVM62.1	**QVM62.1**

7

Solar sensor

QLS60

- For measuring the solar radiation intensity.

Data sheet	N1943
Operating voltage	AC 24 V DC 18...30 V
Power consumption	2.5 VA
Measuring range	0...1000 W/m²
Time constant	2 s
Connection, electrical	Screw terminals
Analog output, signal	DC 0...10 V DC 4...20 mA
Degree of protection	IP65
Dimensions (W x H x D)	51 x 92 x 46 mm
Warranty	60 Months

Stock no.	Product no.
BPZ:QLS60	**QLS60**

7

Valves and actuators

Overview and selection tools		380
Actuators for globe and pressure independent control valves (PICV)	Thermostatic head	414
	Electrothermal	415
	Electromotoric	422
	Electrohydraulic	448
Globe and pressure independent control valve (PICV)	2-port flanged valves	454
	2-port threaded valves	482
	3-port flanged valves	504
	3-port threaded valves	526
	Flanged pressure independent control valves	545
	Threaded pressure independent control valves	556
Actuators for rotary valves	Rotary actuators	575
Rotary valves	Ball valves	587
	Slipper valves	614
	Butterfly valves	615
	Eccentric plug valves	622
Refrigerant valves	For expansion, hotgas and suction throttle applications	624
	2-port modulating pilot valve	627
	For refrigeration units and heat recovery	628
	For condensate control	629

											Recommended m						
		2-port valve	3-port valve	6-port valve	PN class	Type of connection	Silicon-free grease	Closed circuits	Open circuits	Permissible medium temperature [°C]	Chilled water	Cooling water [1]	Drinking water	Low-temperature hot water	High-temperature hot water	Water glycol mixture	Saturated steam
Int. Valves	EVG..	■			16	ET		■		1...120	■			■		■ [4]	
	EXG..		■		16	ET		■		1...120	■			■		■ [4]	
	EVF..	■			16	F		■		1...120	■			■		■ [4]	
	EXF..		■		16	F		■		1...120	■			■		■ [4]	
PICVs	VPD../VPE..	■			10	ET		■		2...95	■			■		■	
	VQI46../VQP46..	■			25	ET/IT		■		1...90	■			■		■	
	VPI46../VPP46..	■			25	ET/IT		■		1...120	■			■		■	
	VWPG51...			■	25	ET		■		0...90	■			■		■	
	VPF43../VPF44..	■			16	F	■	■		1...120	■			■		■	
	VPF53../VPF54..	■			25	F	■	■		1...120	■			■		■	
Globe valves	VDN../VEN../VUN..	■			10	ET		■		1...120	■			■		■	
	VD1..CLC	■			10	ET		■		1...110	■			■		■	
	VVP45..	■			16	ET		■		1...110	■			■		■	
	VXP45..		■		16	ET		■		1...110	■			■		■	
	VMP45..		■		16	ET		■		1...110	■			■		■	
	VVP47..	■			16	ET		■		1...110	■			■		■	
	VXP47..		■		16	ET		■		1...110	■			■		■	
	VMP47..		■		16	ET		■		1...110	■			■		■	
	VVG41..	■			16	ET	■	■	■	-25...150	■	■		■	■	■	■
	VXG41..		■		16	ET	■	■	■	-25...150	■	■		■	■	■	
	VXG41..01 [5]		■		16	ET	■	■	■	-25...150	■	■	■	■	■	■	
	VVG44..	■			16	ET	■	■		1...120	■			■		■	
	VXG44..		■		16	ET	■	■		1...120	■			■		■	
	VVG549..	■			25	ET		■		1...130	■	■		■	■	■	
	VVI46../2	■			16	IT		■		1...110	■			■		■	
	VXI46../2		■		16	IT		■		1...110	■			■		■	
	VVF22..	■			6	F	■	■		-10...130	■			■	■	■	
	VXF22..		■		6	F	■	■		-10...130	■			■	■	■	
	VVF32..	■			10	F	■	■		-10...150	■			■	■	■	
	VXF32..		■		10	F	■	■		-10...150	■			■	■	■	
	VVF42..	■			16	F	■	■		-10...150	■			■	■	■	
	VXF42..		■		16	F	■	■		-10...150	■			■	■	■	
	VVF43..	■			16	F	■	■	■	-20...220	■	■		■	■	■	■
	VXF43..		■		16	F	■	■	■	-20...220	■	■		■	■	■	
	VVF53..	■			25	F	■	■	■	-20...220	■	■		■	■	■	■
	VXF53..		■		25	F	■	■	■	-20...220	■	■		■	■	■	
	VVF63..	■			40	F		■	■	-25...220	■	■		■	■	■	■
	VXF63..		■		40	F		■	■	-25...220	■	■		■	■	■	
Control ball valves	VAG61..	■			40	ET	■	■		-10...120	■			■	■	■	
	VBG61..		■		40	ET	■	■		-10...120	■			■	■	■	
	VAI61..	■			40	IT	■	■		-10...120	■			■	■	■	
	VBI61..		■		40	IT	■	■		-10...120	■			■	■	■	
	VWG41..			■	16	ET/IT	■	■		1...90	■			■	■	■	
Magnetic valves	MXG461..	■	■		16	ET		■		1...130	■			■		■	
	MXG461..P	■	■		16	ET		■		1...130							
	MXG461B..	■	■		16	ET		■	■	-20...130	■	■	■	■		■	
	MXG461S..	■	■		16	ET		■	■	1...130	■	■		■		■	
	MXG462S..	■	■		16	ET		■	■	-20...130	■	■		■		■	
	MXF461..	■	■		16	F		■		1...130	■			■		■	
	MXF461..P	■	■		16	F		■		1...130							
	M3P..FY	■	■		16	F		■		1...120	■			■		■	
	M3P..FYP	■	■		16	F		■		1...120							
	MVF461H..	■			16	F		■		1...180	■			■	■	■	■
Rotary valves	VBF21..		■		6	F		■		1...120				■	■		
	VFW41../VFW42..	■			16	F		■		-10...120	■			■	■	■	
	VFL41..	■			16	F		■	■	-10...120	■	■		■		■	
	VAG60..	■			40	ET	■	■		-10...120	■			■	■	■	
	VBG60..		■		40	ET	■	■		-10...120	■			■	■	■	
	VAI60..	■			40	IT	■	■		-10...120	■			■	■	■	
	VBI60..		■		40	IT	■	■		-10...120	■			■	■	■	
Refrigerant valves	M2FP03GX				32	–		■		-40...100							
	M3FK..LX..		■		32	S		■		-40...120							
	M3FB..LX..		■		PS 43	S		■		-40...120							
	MVL661..	■			PS 45	S		■		-40...120							
	MVS661..N	■			63	W/S		■		-40...120							

Recommendation: water treatment according to VDI 2035
[1] Open circuits; [2] Not for drinking water circuit (open circuit); [3] Variable air volume; [4] Ethylene glycol-based anti-freezes (DN25 excepted);

	Refrigerants (ammonia)	Generation: District heating	Boiler plants	Chiller plants	Cooling towers [1]	Distribution: Domestic hot water [2]	Heating groups	Air handling units	Consumption / Use: Floor heating	Radiators	Chilled ceilings	Heated and chilled ceilings	VAV [3]	Fan coil units	Zone control		
							■	■								EVG..	Int. Valves
							■	■								EXG..	Int. Valves
							■	■								EVF..	Int. Valves
							■	■								EXF..	Int. Valves
										■	■		■	■	■	VPD../VPE..	PICVs
							■	■	■ [6]		■		■	■	■	VQI46../VQP46..	PICVs
							■	■	■ [6]		■		■	■	■	VPI46../VPP46..	PICVs
												■		■		VWPG51...	PICVs
		■					■	■								VPF43../VPF44..	PICVs
		■					■	■								VPF53../VPF54..	PICVs
										■						VDN../VEN../VUN..	Globe valves
									■		■		■	■	■	VD1..CLC	Globe valves
		■	■			■	■	■	■		■		■	■	■	VVP45..	Globe valves
			■			■	■	■	■				■	■	■	VXP45..	Globe valves
													■	■	■	VMP45..	Globe valves
									■		■		■	■	■	VVP47..	Globe valves
									■				■	■	■	VXP47..	Globe valves
													■	■	■	VMP47..	Globe valves
		■	■	■		■	■	■								VVG41..	Globe valves
			■	■		■	■	■								VXG41..	Globe valves
			■	■		■	■	■								VXG41..01 [5]	Globe valves
		■	■	■		■	■	■								VVG44..	Globe valves
			■	■		■	■	■								VXG44..	Globe valves
		■	■													VVG549..	Globe valves
									■		■		■	■	■	VVI46../2	Globe valves
									■		■		■	■	■	VXI46../2	Globe valves
			■	■		■	■	■								VVF22..	Globe valves
			■	■		■	■	■								VXF22..	Globe valves
		■	■	■		■	■	■								VVF32..	Globe valves
			■	■		■	■	■								VXF32..	Globe valves
		■	■	■		■	■	■								VVF42..	Globe valves
			■	■		■	■	■								VXF42..	Globe valves
		■	■	■		■	■	■								VVF43..	Globe valves
			■	■		■	■	■								VXF43..	Globe valves
		■	■	■		■	■	■								VVF53..	Globe valves
			■	■		■	■	■								VXF53..	Globe valves
		■	■	■		■	■	■								VVF63..	Globe valves
			■	■		■	■	■								VXF63..	Globe valves
						■	■	■			■		■	■	■	VET61..	Control ball valves
						■	■	■						■	■	VBG61..	Control ball valves
						■	■	■			■		■	■	■	VAI61..	Control ball valves
						■	■	■						■	■	VBI61..	Control ball valves
												■		■		VWG41..	Control ball valves
		■		■		■	■	■								MXG461..	Magnetic valves
							■									MXG461..P	Magnetic valves
				■		■	■									MXG461B..	Magnetic valves
				■			■	■								MXG461S..	Magnetic valves
				■			■	■								MXG462S..	Magnetic valves
		■		■		■	■	■								MXF461..	Magnetic valves
							■									MXF461..P	Magnetic valves
		■		■		■	■	■								M3P..FY	Magnetic valves
							■									M3P..FYP	Magnetic valves
		■	■	■		■	■	■								MVF461H..	Magnetic valves
			■				■									VBF21..	Rotary valves
			■	■			■									VFW41../VFW42..	Rotary valves
			■	■	■	■	■									VFL41..	Rotary valves
			■	■		■	■									VET60..	Rotary valves
			■	■		■	■									VBG60..	Rotary valves
			■	■		■	■									VAI60..	Rotary valves
			■	■		■	■									VBI60..	Rotary valves
	■			■												M2FP03GX	Refrigerant valves
				■												M3FK..LX..	Refrigerant valves
				■												M3FB..LX..	Refrigerant valves
				■												MVL661..	Refrigerant valves
	■			■												MVS661..N	Refrigerant valves

[5] Sealed bypass; [6] As zone valve for floor heating systems;
IT = internally threaded connection, ET = externally threaded connection, F = flanged connection, S = soldered connection, W = welded connection

Intelligent Valves

Typical applications	Valve type	Operating voltage	Positioning signal	Interface
– Heating groups – Air handling units	**EVG4U10E.. DN15-50**	AC/DC 24 V	0...10 V, 2...10 V, 4...20 mA	Modbus RTU BACnet on UDP/IP Ethernet to building operator
	EVF4U20E.. DN65-125	AC/DC 24 V	0...10 V, 2...10 V, 4...20 mA	Modbus RTU BACnet on UDP/IP Ethernet to building operator

PN 16 Data sheet	1...120 °C A6V11444716	DN	G [Inch]	k_{vs} [m³/h]	$\dot{V}_{min}$ [m³/h]	$\dot{V}_{100}$ [m³/h]	Δp_s [kPa]	Δp_{max} [kPa]
	EVG4U10E015	15	G 1B	4	0.45	1.5	1400	600[1]
	EVG4U10E020	20	G 1 ¼B	5	0.9	3	1400	600[1]
	EVG4U10E025	25	G 1 ½B	10	1.35	4.5	1400	600[1]
	EVG4U10E032	32	G 2B	11	2.1	7	1000	600[1]
	EVG4U10E040	40	G 2¼B	26	3.45	11.5	800	600[1]
	EVG4U10E050	50	G 2¾B	30	5.4	18	600	600[1]
	EVF4U20E065	65		55	9	30	1600	600[1]
	EVF4U20E080	80		80	14.5	48	1600	600[1]
	EVF4U20E100	100		113	22.5	75	1600	600[1]
	EVF4U20E125	125		142	36	120	1600	600[1]

Typical applications	Valve type	Operating voltage	Positioning signal	Interface
– Heating groups – Air handling units	**EXG4U10E.. DN15-50**	AC/DC 24 V	0...10 V, 2...10 V, 4...20 mA	Modbus RTU BACnet on UDP/IP Ethernet to building operator
	EXF4U20E.. DN65-100	AC/DC 24 V	0...10 V, 2...10 V, 4...20 mA	Modbus RTU BACnet on UDP/IP Ethernet to building operator

PN 16 1...120 °C		DN	G [Inch]	k_{vs} [m³/h]	$\dot{V}_{min}$ [m³/h]	$\dot{V}_{100}$ [m³/h]	Δp_{max} [kPa]
	EXG4U10E015	15	G 1B	3.7	0.36	1.2	200
	EXG4U10E020	20	G 1 ¼B	4	0.6	2	200
	EXG4U10E025	25	G 1 ½B	8	0.96	3.2	200
	EXG4U10E032	32	G 2B	10	1.5	5	200
	EXG4U10E040	40	G 2¼B	18	2.4	8	200
	EXG4U10E050	50	G 2¾B	26	3.6	12	200
	EXF4U20E065	65		55	6	20	150
	EXF4U20E080	80		80	9.6	32	75
	EXF4U20E100	100		113	15	50	125

Threaded PICVs

Typical applications	Actuators	Data sheet
– Chilled ceilings – Fan coil units – Zone control	**STA..**	A6V14028280
	SUE21P	A6V11780777

Operating voltage	Positioning signal	Positioning time [s] STA	Positioning time [s] SUE21P	6.5 mm 125 N	5 mm 100 N
AC 230 V	2-position	270	12	**STA321.65L10**	**SUE21P**
AC/DC 24 V	2-position/PDM	270	–	**STA121.65L10**	–

PN 25 1...90 °C Data sheet	Without pressure testing points A6V11877580	With pressure testing points	DN	G [Inch]	$\dot{V}_{min}$ [l/h]	$\dot{V}_{100}$ [l/h]	Δp_{min} [kPa]	Δp_{max} [kPa]	Δp_{min} [kPa]	Δp_{max} [kPa]
	VQP46.10L0.5	**VQP46.10L0.5Q**	10	½	30	520	30	600	30	600
	VQP46.15L0.5	**VQP46.15L0.5Q**	15	¾	30	520	28	600	28	600
	VQP46.15F1.3	**VQP46.15F1.3Q**	15	¾	300	1300	28	600	28	600
	VQP46.20F1.5	**VQP46.20F1.5Q**	20	1	320	1500	35	600	35	600
	VQP46.25F1.8	**VQP46.25LF.8Q**	25	1 ¼	620	1800	31	600	31	600

PN 25 1...90 °C Data sheet	Without pressure testing points A6V11877580	With pressure testing points	DN	Rp [Inch]	$\dot{V}_{min}$ [l/h]	$\dot{V}_{100}$ [l/h]	Δp_{min} [kPa]	Δp_{max} [kPa]	Δp_{min} [kPa]	Δp_{max} [kPa]
	VQI46.15L0.5	**VQI46.15L0.5Q**	15	½	30	520	28	600	28	600
	VQI46.15F1.3	**VQI46.15F1.3Q**	15	½	300	1300	28	600	28	600
	VQI46.20F1.5	**VQI46.20F1.5Q**	20	¾	320	1500	35	600	35	600
	VQI46.25F1.8	**VQI46.25F1.8Q**	25	1	620	1800	31	600	31	600

[1] The safety measures must be observed according to the data sheet

Threaded PICVs

Typical applications	Actuators	Data sheet
– Radiators – Chilled ceilings – Fan coil units	**RTN..** **STA..** **SSA..31/61..** **SSA..HF** **SSA118..**	N2111 A6V14028280 A6V11858278 A6V11858280

Operating voltage	Positioning signal	Positioning time [s]		6.5 mm 125 N	2.5 mm 100 N
AC 230 V	2-position	270	–	**STA321.65L10**	–
	3-position	67.5	–	–	**SSA331.00**
AC 24 V	3-position	67.5	–	–	**SSA131.00**
	0...10 V	270 [2]	–	**STA161.65L10**	–
AC/DC 24 V	2-position/PDM	270	–	**STA121.65L10**	–
	0...10 V	25	–	–	**SSA161.05**
	4...20 mA	25	–	–	**SSA151.05HF**
	0...10 V	25	–	–	**SSA161.05HF**
	0...10 V	25	–	–	**SSA161E.05HF**[1]
	KNX S-/LTE-Mode, KNX PL-Link	50	–	–	**SSA118.09HKN**
			RTN51	–	–
			RTN71	–	–
			RTN81	–	–

PN 10 2...95 °C Data sheet	DIN A6V13089932	DN	Rp/R [Inch]	V̇ [l/h]	Norm	Δp_{min} [kPa]	Δp_{max} [kPa]	Δp_{min} [kPa]	Δp_{max} [kPa]	Δp_{min} [kPa]	Δp_{max} [kPa]
	VPD110A-135	10	Rp/R ⅜	25...135	DIN	10	60	10	60	10	60
	VPD115A-135	15	Rp/R ½	25...135	DIN	10	60	10	60	10	60
	VPD120A-135	20	Rp/R ¾	25...135	DIN	10	60	10	60	10	60
	VPE110A-135	10	Rp/R ⅜	25...135	DIN	10	60	10	60	10	60
	VPE115A-135	15	Rp/R ½	25...135	DIN	10	60	10	60	10	60
	VPE120A-135	20	Rp/R ¾	25...135	DIN	10	60	10	60	10	60
	VPU110A-135	10	Rp/R ⅜	25...135	DIN	10	60	10	60	10	60
	VPU115A-135	15	Rp/R ½	25...135	DIN	10	60	10	60	10	60
	VPD210A-135	10	Rp/R ⅜	25...135	NF	10	60	10	60	10	60
	VPD215A-135	15	Rp/R ½	25...135	NF	10	60	10	60	10	60
	VPD220A-135	20	Rp/R ¾	25...135	NF	10	60	10	60	10	60
	VPE210A-135	10	Rp/R ⅜	25...135	NF	10	60	10	60	10	60
	VPE215A-135	15	Rp/R ½	25...135	NF	10	60	10	60	10	60
	VPE220A-135	20	Rp/R ¾	25...135	NF	10	60	10	60	10	60

[1] Equal percentage valve characteristic

[2] In control mode (warm-up time) min. running time approx. 30 s/mm

Threaded PICVs

Typical applications	Actuators	Data sheet
– Heating groups – Air handling units – Chilled ceilings – VAV – Fan coil units – Zone control	**STA..** **SSA..31/61..** **SSA..HF** **SSA118..** **SAY..P..**	A6V14028280 A6V11858276 A6V11858278 A6V11858280 A6V10628469

Operating voltage	Positioning signal	Positioning time [s] STA	SSA	SAY	6.5 mm 125 N	2.5 / 5 mm 100 N	15 mm 200 N
AC 230 V	3-position	–	67.5/135	30	–	**SSA331.00**	**SAY31P03**
	2-position	270	–	–	**STA321.65L10**	–	–
AC 24 V	0...10 V	270[1)]	–	30	**STA161.65L10**	–	–
AC/DC 24 V	3-position	–	67.5/135	30	–	**SSA131.00**	**SAY81P03**
	2-position/PDM	270	–	–	**STA121.65L10**	–	–
	0...10 V	–	25/50	30	–	**SSA161.05**	**SAY61P03**
	Modbus RTU	–	–	30	–	–	**SAY61P03/MO**
	4...20 mA	–	25	–	–	**SSA151.05HF**	–
	0...10 V	–	25	–	–	**SSA161.05HF**	–
	KNX S-/LTE-Mode, KNX PL-Link	–	50	–	–	**SSA118.09HKN**	–

PN 25 1...120 °C	Without pressure testing points	With pressure testing points	DN	G [Inch]	$\dot{V}_{min}$ [l/h]	$\dot{V}_{100}$ [l/h]	Δp_{min} [kPa]	Δp_{max} [kPa]	Δp_{min} [kPa]	Δp_{max} [kPa]	Δp_{min} [kPa]	Δp_{max} [kPa]
Data sheet	N4855											
	VPP46.10L0.2	**VPP46.10L0.2Q**	10	½	30	200	16	600	16	600	–	–
	VPP46.10L0.4	**VPP46.10L0.4Q**	10	½	65	333	16	600	–	–	–	–
	VPP46.10L0.4	**VPP46.10L0.4Q**	10	½	65	370	–	–	16	600	–	–
	VPP46.15L0.2	**VPP46.15L0.2Q**	15	¾	30	200	19	600	19	600	–	–
	VPP46.15L0.6	**VPP46.15L0.6Q**	15	¾	100	575	19	600	19	600	–	–
	VPP46.20F1.4	**VPP46.20F1.4Q**	20	1	200	1190	22	600	–	–	–	–
	VPP46.20F1.4	**VPP46.20F1.4Q**	20	1	220	1330	–	–	22	600	–	–
	VPP46.25F1.8	**VPP46.25F1.8Q**	25	1 ¼	204	1470	39	600	–	–	–	–
	VPP46.25F1.8	**VPP46.25F1.8Q**	25	1 ¼	250	1800	–	–	39	600	–	–
	VPP46.32F4	**VPP46.32F4Q**	32	1 ½	450	3270	28	600	–	–	–	–
	VPP46.32F4	**VPP46.32F4Q**	32	1 ½	550	4001	–	–	28	600	–	–

PN 25 1...120 °C	Without pressure testing points	With pressure testing points	DN	Rp [Inch]	$\dot{V}_{min}$ [l/h]	$\dot{V}_{100}$ [l/h]	Δp_{min} [kPa]	Δp_{max} [kPa]	Δp_{min} [kPa]	Δp_{max} [kPa]	Δp_{min} [kPa]	Δp_{max} [kPa]
Data sheet	N4855											
	VPI46.15L0.2	**VPI46.15L0.2Q**	15	½	30	200	19	600	19	600	–	–
	VPI46.15L0.6	**VPI46.15L0.6Q**	15	½	100	575	19	600	19	600	–	–
	VPI46.20F1.4	**VPI46.20F1.4Q**	20	¾	200	1190	22	600	–	–	–	–
	VPI46.20F1.4	**VPI46.20F1.4Q**	20	¾	220	1330	–	–	22	600	–	–
	VPI46.25F1.8	**VPI46.25F1.8Q**	25	1	204	1470	39	600	–	–	–	–
	VPI46.25F1.8	**VPI46.25F1.8Q**	25	1	250	1800	–	–	39	600	–	–
	VPI46.32F4	**VPI46.32F4Q**	32	1 ¼	450	3270	28	600	–	–	–	–
	VPI46.32F4	**VPI46.32F4Q**	32	1 ¼	550	4001	–	–	28	600	–	–
	–	**VPI46.40F9.5Q**	40	1 ½	1370	9500	–	–	–	–	25	600
	–	**VPI46.50F12Q**	50	2	1400	11500	–	–	–	–	36	600

6-port pressure independent control ball valves

Typical applications	Actuators	Data sheet
– Heated and chilled ceilings – Fan coil units	**GDB..9E..6..**	A6V12986395

5 Nm

Operating voltage	Positioning signal	Positoning time [s] GDB	Cable	
AC/DC 24 V	0/2...10 V	150	0,9 m	**GDB161.9E/6W**
	0/2...10 V	150	0,9 m	**GDB161.9E/6P**
	0/2...10 V	150	3 m	**GDB161.9G/6W**
	0/2...10 V	150	3 m	**GDB161.9G/6P**
	0/2...10 V	150	5 m	**GDB161.9H/6W**
	0/2...10 V	150	5 m	**GDB161.9H/6P**
	Modbus RTU	150		**GDB161.9E/MO6P**

PN 25	0...90 °C			DN	G [Inch]	$\dot{V}_{min}$ [l/h]	$\dot{V}_{100}$ [l/h]	Δp_{min} [kPa]	Δp_{max} [kPa]
Data sheet		A6V11466366							
		VWPG51.15L0.9	VWPG51.15L0.9Q	15	¾	35	820	18	400
		VWPG51.15F1.2	VWPG51.15F1.2Q	15	¾	210	1200	23	400
		VWPG51.20F4.3	VWPG51.20F4.3Q	20	1	460	4250	38	400

Fittings for 6-port pressure independent control ball valves

Type	Connection Valve	Coupling	Description
ALN14.152B	**G ¾ "**	**R ½ "**	Fittings set made of DZR brass, consisting of: – 2x cap nuts – 2x cap nuts with sleeves and insert per ISO 228-1 – 2x flat seals
ALN14.202B	**G ¾ "**	**R ¾ "**	
ALN15.202B/1	**G 1 "**	**R ¾ "**	
ALN15.252B	**G 1 "**	**R 1 "**	
ALP55	**G ¾ "**	**G ½ "A**	Fittings set made of DZR brass, consisting of: – 1x cap nuts – 1x P/T coupling with sleeves and insert per ISO 228-1 – 1x flat seals
ALP56	**G ¾ "**	**G ¾ "A**	
ALP57	**G 1 "**	**G ¾ "A**	
ALP58	**G 1 "**	**G 1 "A**	
ALP59	**VWPG51.15..**	**–**	Spare nipple P/T port fopr body valve
ALP60	**VWPG51.20..**	**–**	

8

Flanged PICVs

Typical applications	Actuators	Data sheet
– District heating – Heating groups – Air handling units	**SAX..P..**	N4509
	SQV91P..	N4833
	SAV..P..	N4510

Operating voltage	Positioning signal	Positioning time [s] SAX	SQV	SAV	Spring return function [s]	20 mm 500 N	20 / 40 mm 1100 N	40 mm 1100 N
AC 230 V	3-position	30	–	120	–	**SAX31P03**	**–**	**SAV31P00**
	3-position	–	40/80	–	30	**–**	**SQV91P40** [1]	**–**
	3-position	–	40/80	–	30	**–**	**SQV91P30** [2]	**–**
AC/DC 24 V	3-position	30	–	120	–	**SAX81P03**	**–**	**SAV81P00**
	3-position	–	40/80	–	30	**–**	**SQV91P40** [1]	**–**
	3-position	–	40/80	–	30	**–**	**SQV91P30** [2]	**–**
	0...10 V, 4...20 mA	30	–	120	–	**SAX61P03**	**–**	**SAV61P00**
	0...10 V, 4...20 mA	–	40/80	–	30	**–**	**SQV91P40** [1]	**–**
	0...10 V, 4...20 mA	–	40/80	–	30	**–**	**SQV91P30** [2]	**–**
	Modbus RTU	30	–	120	–	**SAX61P03/ MO**	**–**	**SAV61P00/ MO**

PN 16	1...120 °C	DN	$\dot{V}_{min}$ [m³/h]	$\dot{V}_{100}$ [m³/h]	Δp_{min} [kPa]	$\Delta p_s/\Delta p_{max}$ [kPa]	$\Delta p_s/\Delta p_{max}$ [kPa]	$\Delta p_s/\Delta p_{max}$ [kPa]
Data sheet	A6V11466366							
	VPF44.50F15 [3]	50	3.7	14.3	25	700/600	700/600	–
	VPF44.50F25 [3]	50	5.7	24.6	55	700/600	700/600	–
	VPF44.65F25 [3]	65	4.5	24.4	32	700/600	700/600	–
	VPF44.65F35 [3]	65	6.4	37.7	50	700/600	700/600	–
	VPF44.80F35 [3]	80	6.8	35.7	22	700/600	700/600	–
	VPF44.80F45 [3]	80	8.5	49	40	700/600	700/600	–
	VPF44.100F70	100	12.2	69.6	33	–	700/600	700/600
	VPF44.100F90	100	14.8	90.9	75	–	700/600	700/600
	VPF44.125F110	125	15	112	30	–	600	600
	VPF44.125F135	125	18	132	45	–	600	600
	VPF44.150F150	150	19	150	30	–	600	600
	VPF44.150F200	150	26	208	50	–	600	600
	VPF43.200F210 [4]	200	95	210	32	–	600	600
	VPF43.200F280 [4]	200	130	280	78	–	600	600

PN 25	1...120 °C	DN	$\dot{V}_{min}$ [m³/h]	$\dot{V}_{100}$ [m³/h]	Δp_{min} [kPa]	$\Delta p_s/\Delta p_{max}$ [kPa]	$\Delta p_s/\Delta p_{max}$ [kPa]	$\Delta p_s/\Delta p_{max}$ [kPa]
Data sheet	N4316							
	VPF54.50F15	50	3.7	14.3	25	700/600	700/600	–
	VPF54.50F25	50	5.7	24.6	55	700/600	700/600	–
	VPF54.65F25	65	4.5	24.4	32	700/600	700/600	–
	VPF54.65F35	65	6.4	37.7	50	700/600	700/600	–
	VPF54.80F35	80	6.8	34.7	22	700/600	700/600	–
	VPF54.80F45	80	8.5	49.9	40	700/600	700/600	–
	VPF54.100F70	100	12.2	69.6	33	–	700/600	700/600
	VPF54.100F90	100	14.8	90.9	45	–	700/600	700/600
	VPF54.125F110	125	15	112	30	–	600	600
	VPF54.125F135	125	18	132	45	–	600	600
	VPF54.150F150	150	19	150	30	–	600	600
	VPF54.150F200	150	26	208	50	–	600	600
	VPF53.200F210 [4]	200	95	210	32	–	600	600
	VPF53.200F280 [4]	200	130	280	78	–	600	600

8

[1] Fail-safe function: valve closed
[2] Fail-safe function: valve open
[3] Concerns valve type from series B
[4] Max. medium temperature 110 °C

Threaded globe valves

Typical applications	Actuators	Data sheet
– Radiators	**RTN..**	N2111

RTN51/RTN51G	RTN71	RTN81

Typical applications	Actuators	Data sheet
– Radiators	**STA..**	A6V14028280
	SSA..31/61..	A6V11858276
	SSA..HF	A6V11858278
	SSA118..	A6V11858280

Operating voltage	Positioning signal	Positioning time [s]	4.0 mm 100 N	2.5 mm 100 N
AC 230 V	2-position	210	**STA321.40L10**	–
	3-position	67.5	–	**SSA331.00**
AC 24 V	3-position	67.5	–	**SSA131.00**
	0...10 V	270 [1]	**STA161.40L10**	–
AC/DC 24 V	2-position/PDM	270	**STA121.40L10**	–
	0...10 V	25	–	**SSA161.05**
	4...20 mA	25	–	**SSA151.05HF**
	0...10 V	25	–	**SSA161.05HF**
	KNX S-/LTE-Mode, KNX PL-Link	50	–	**SSA118.09HKN**
Normally Open/Normally Closed (for radiator valves)			**NC**	–

PN 10 1...120 °C	DIN	NF	DN	Rp/R [Inch]	k_v [m³/h]	Δp_{max} [kPa]	Δp_{max} [kPa]
Data sheet	N2105	N2106					
	VDN110	**VDN210**	10	Rp/R ⅜	0.09...0.63	60	60
	VDN115	**VDN215**	15	Rp/R ½	0.10...0.89	60	60
	VDN120	**VDN220**	20	Rp/R ¾	0.31...1.41	60	60
	VEN110	**VEN210**	10	Rp/R ⅜	0.09...0.63	60	60
	VEN115	**VEN215**	15	Rp/R ½	0.10...0.89	60	60
	VEN120	**VEN220**	20	Rp/R ¾	0.31...1.41	60	60
	–	**VUN210**	10	Rp/R ⅜	0.14...0.60	60	60
	–	**VUN215**	15	Rp/R ½	0.13...0.77	60	60

Presettings for radiator valves VEN.., VDN.., VUN..

k_v values [m³/h] at the different preadjusted positions (XP = 2K)

Control range with electromotoric and electrothermic actuators SSA...	■	■	■	■	■	■	–
Control range with thermostatic head RTN..	■	■	■	■	■	■	■
Reference numbers for preadjustment	1	2	3	4	5	N	N (k_{vs})
VDN110/VDN210/VEN110/VEN210	0.072	0.17	0.24	0.28	0.37	0.43	0.63
VDN115/VDN215/VEN115/VEN215	0.07	0.17	0.28	0.36	0.45	0.50	0.89
VDN120/VDN220/VEN120/VEN220	0.22	0.35	0.44	0.52	0.60	0.71	1.41
VUN210	0.14	0.26	0.34	0.39	0.40	0.43	0.60
VUN215	0.13	0.22	0.30	0.39	0.45	0.50	0.77

8

[1] In control mode (warm-up time) min. running time approx. 30 s/mm
k_v = nominal flow rate of cold water (5...30 °C) through the valve at the respective stroke and a differential pressure of 100 kPa (1 bar)
The selected k_v values of the radiator valves can be easily and precisely set on the valve head in 5 steps + N (fully open).

Threaded globe valves

Typical applications	Actuators	Data sheet		4.0 mm	2.5 mm
– Chilled ceilings	**STA..**	A6V14028280		100 N	100 N
	SSA..31/61..	A6V11858276			
	SSA..HF	A6V11858278			
	SSA118..	A6V11858280			
	Operating voltage	**Positioning signal**	**Positioning time [s]**		
	AC 230 V	2-position	270	**STA321.40L10**	–
		3-position	67.5	–	**SSA331.00**
	AC 24 V	3-position	67.5	–	**SSA131.00**
		0...10 V	270 [1]	**STA161.40L10**	–
	AC/DC 24 V	2-position/PDM	270	**STA121.40L10**	–
		0...10 V	25	–	**SSA161.05**
		4...20 mA	25	–	**SSA151.05HF**
		0...10 V	25	–	**SSA161.05HF**
		0...10 V	25	–	**SSA161E.05HF**
KNX		KNX S-/LTE-Mode, KNX PL-Link	50	–	**SSA118.09HKN**
	Normally Open/Normally Closed (for radiator valves)			**NC**	–

PN 10 1...110 °C		DN	Rp/R [Inch]	k_v [l/h]	Δp_{max} [kPa]	Δp_{max} [kPa]
Data sheet	N2103					
	VD115CLC	15	Rp/R ½	0.25...1.9	150	150
	VD120CLC	20	Rp/R ¾	0.25...2.6	150	150
	VD125CLC	25	Rp/R 1	0.25...2.6	150	150

[1] In control mode (warm-up time) min. running time approx. 30 s/mm
k_v = nominal flow rate of cold water (5...30 °C) through the valve at the respective stroke and a differential pressure of 100 kPa (1 bar)
The selected k_v values of the radiator valves can be easily and precisely set on the valve head in 5 steps + N (fully open).

Threaded globe valves

Typical applications	Actuators	Data sheet			5.5 mm	
– Floor heating	**SSB..**	N4891, A6V12681511			200 N	200 N
– Chilled ceilings						
– VAV	**Operating voltage**	**Positioning signal**	**Positioning time [s]**	**Auxiliary switch** SSB..1.1		
– Fan coil units	AC 230 V	3-position	150	✓	**SSB31**	**SSB31.1**
– Zone control	AC 24 V	3-position	150	✓	**SSB81**	**SSB81.1**
		0...10 V	27,5	–	**SSB161.05HF**	–
		0...10 V	27,5	–	**SSB161.05UT**	–

PN 16	1...110 °C	DN	G [Inch]	k_{vs} [m³/h]	Δp_s [kPa]	Δp_{max} [kPa]	Δp_s [kPa]	Δp_{max} [kPa]
Data sheet	N4845							
	VVP45.10-.. [1]	10	G ½B	0.25 / 0.4 / 0.63 / 1 / 1.6	725	400	725	400
	VVP45.15-2.5	15	G ¾B	2.5	350	350	350	350
	VVP45.20-4	20	G 1B	4	350	350	350	350
	VVP45.25-6.3	25	G 1¼B	6.3	300	300	300	300
	VXP45.10-..	10	G ½B	0.25 / 0.4 / 0.63 / 1 / 1.6	–	400	–	400
	VXP45.15-2.5	15	G ¾B	2.5	–	350	–	350
	VXP45.20-4	20	G 1B	4	–	350	–	350
	VXP45.25-6.3	25	G 1¼B	6.3	–	300	–	300
	VMP45.10-..	10	G ½B	0.25 / 0.4 / 0.63 / 1	–	400	–	400
	VMP45.10-1.6	10	G ½B	1.6	–	400	–	400
	VMP45.15-2.5	15	G ¾B	2.5	–	350	–	350
	VMP45.20-4	20	G 1B	4	–	350	–	350

VVP45..N with Serto compression fittings, k_{vs} = 2.5 / 4 / 6.3 m³/h
VVP45..S, VMP45..S with Conex® compression fittings, k_{vs} = 0.63 / 1 / 1.6 / 2.5 m³/h
VVP47..S, VMP47..S with Conex® compression fittings, k_{vs} = 0.63 / 1 / 1.6 / 2.5 m³/h
[1] .. = k_{vs} value
[2] In control mode (warm-up time) min. running time approx. 30 s/mm

Typical applications	Actuators	Data sheet			6.5 mm	2.5 mm	
– Chilled ceilings	STP..	A6V14028280			125 N	135 N	160 N
– VAV	SFP..	N4865					
– Fan coil units	SSP.., SSF...	N4864, A6V12681511					
	Operating voltage	**Positioning signal**	**Positioning time [s]**	**Spring return function [s]**			
	AC 230 V	2-position	270	–	**STP321.65L10**	–	–
		2-position	10	30...50	–	**SFP21/18**	–
		3-position	150	–	–	–	**SSP31**
	AC 24 V	2-position	10	30...50	–	**SFP71/18**	–
		3-position	43	–	–	–	**SSP81.04**
		3-position	150	–	–	–	**SSP81**
		0...10 V	270 [2]	–	**STP161.65L10**	–	–
	AC/DC 24 V	2-position/PDM	270	–	**STP121.65L10**	–	–
		0...10 V	10	–	–	–	**SSF161.05HF**

PN 16	1...110 °C	DN	G [Inch]	k_{vs} [m³/h]	Δp_s [kPa]	Δp_{max} [kPa]	Δp_s [kPa]	Δp_{max} [kPa]	Δp_s [kPa]	Δp_{max} [kPa]
Data sheet	N4847									
	VVP47.10-.. [1]	10	G ½B	0.25 / 0.4	700	400	1000	400	1000	400
	VVP47.10-..	10	G ½B	0.63 / 1	250	250	500	400	500	400
	VVP47.10-1.6	10	G ½B	1.6	150	150	300	300	300	300
	VVP47.15-2.5	15	G ¾B	2.5	150	150	300	300	300	300
	VVP47.20-4	20	G 1B	4	100	100	175	175	175	175
	VXP47.10-..	10	G ½B	0.25 / 0.4	–	400	–	400	–	400
	VXP47.10-..	10	G ½B	0.63 / 1	–	250	–	400	–	400
	VXP47.10-1.6	10	G ½B	1.6	–	150	–	300	–	300
	VXP47.15-2.5	15	G ¾B	2.5	–	150	–	300	–	300
	VXP47.20-4	20	G 1B	4	–	100	–	175	–	175
	VMP47.10-..	10	G ½B	0.25 / 0.4	–	400	–	400	–	400
	VMP47.10-..	10	G ½B	0.63 / 1	–	250	–	400	–	400
	VMP47.10-1.6	10	G ½B	1.6	–	150	–	300	–	300
	VMP47.15-2.5	15	G ¾B	2.5	–	150	–	300	–	300

Union nuts for threaded valves

Union nuts for threaded valves	**See page 13**

VVP45..N with Serto compression fittings, k_{vs} = 2.5 / 4 / 6.3 m³/h
VVP45..S, VMP45..S with Conex® compression fittings, k_{vs} = 0.63 / 1 / 1.6 / 2.5 m³/h
VVP47..S, VMP47..S with Conex® compression fittings, k_{vs} = 0.63 / 1 / 1.6 / 2.5 m³/h
[1] .. = k_{vs} value
[2] In control mode (warm-up time) min. running time approx. 30 s/mm

Threaded globe valves

Typical applications	Actuators	Data sheet
– Floor heating – Fan coil units – Zone control	**SFA..**	N4863
	SUA21/3	A6V10446174
	STA..	A6V14028280
	SSA31.04 [1]	N4860

Operating voltage	Positioning signal	Positioning time [s]	Spring return function [s]	2.5 mm 200 N	2.5 mm 170 N	4.5 mm 100 N	2,5 mm 160 N
AC 230 V	2-position	10	30...50	**SFA21/18**	–	–	–
	2-position	270	–	–	–	**STA321.65L10**	–
	2-position/SPST [2]	10	–	–	**SUA21/3**	–	–
	3-position/SPDT [2]	43	–	–	–	–	**SSA31.04**
AC 24 V	2-position	10	30...50	**SFA71/18**	–	–	–
	0...10 V	270 [3]	–	–	–	**STA161.65L10**	–
AC/DC 24 V	2-position/PDM	270	–	–	–	**STA121.65L10**	–

PN 16 Data sheet	1...110 °C A6V10421629	DN	Rp [Inch]	k_{vs} [m³/h]	Δp_s [kPa]	Δp_{max} [kPa]	Δp_s [kPa]	Δp_{max} [kPa]	Δp_s [kPa]	Δp_{max} [kPa]	Δp_s [kPa]	Δp_{max} [kPa]
	VVI46.15/2	15	Rp ½	2	300	300	400	400	200	200	300	300
	VVI46.20/2	20	Rp ¾	3.5	300	300	400	400	200	200	300	300
	VVI46.25/2	25	Rp 1	5	250	250	250	250	150	150	230	230
	VXI46.15/2 [4]	15	Rp ½	2	–	300	–	400	–	200	–	300
	VXI46.20/2 [4]	20	Rp ¾	3.5	–	300	–	400	–	200	–	300
	VXI46.25/2 [4]	25	Rp 1	5	–	250	–	250	–	150	–	230
	VXI46.25T/2	25	Rp 1	5	–	200	–	200	–	140	–	–

Thermal actuators and available cable lengths

For Actuators	PVC Cabel (Type) Cabel length 1 m	2 m	5 m	10 m	Halogenfree Cabel (Type) Cabel length 1 m	5 m	10 m
STA121.65/00 **STA321.65/00** **STP121.65/00** **STP321.65/00**	**ASY21L10**	**ASY21L20**	**ASY21L50**	**ASY21L100**	**ASY21L10**	**ASY21L50**	**ASY21L100**

For Actuators	PVC Cabel, without Feedback signal (Type) Cabel length 1 m	2 m	5 m	10 m	Halogenfree Cabel, without Feedback signal (Type) Cabel length 1 m	5 m	10 m
STA161.65L10 **STA162.65L10** **STP161.65L10** **STP162.65L10**	**ASY61L10**	**ASY61L20**	**ASY61L50**	**ASY61L100**	**ASY61L10H**	**ASY61L50H**	**ASY61L100H**

For Actuators	PVC Cabel, with Feedback signal (Type) Cabel length 1 m	2 m	5 m	10 m	Halogenfree Cabel, without Feedback signal (Type) Cabel length 1 m	5 m	10 m
STA161.65L10 **STA162.65L10** **STP161.65L10** **STP162.65L10**	**ASY61L10**	**ASY61L20**	**ASY61L50**	**ASY61L100**	**ASY61L10H**	**ASY61L50H**	**ASY61L100H**

8

[1] Not suited for radiator valves
[2] SPST = single-pole single-throw, SPDT = single-pole double-throw
[3] In control mode (warm-up time) min. running time approx. 30 s/mm
[4] 70% k_{vs} in bypass, leakage rate in bypass 2...5% of k_{vs} value

Threaded globe valves

Typical applications	Actuators	Data sheet
– District heating	SAX..	N4501
– Boiler plants	SKD..	N4561
– Chiller plants	SKB..	N4564
– Domestic hot water		
– Heating groups		
– Air handling units		

Operating voltage	Positioning signal	Positioning time [s] SAX	SKD	SKB	Spring return function [s] SKD	SKB	20 mm 800 N	1000 N	2800 N
AC 230 V	3-position	120	120	120	–	–	**SAX31.00**	**SKD32.50**	**SKB32.50**
	3-position	–	120	120	8	10	**–**	**SKD32.51**	**SKB32.51**
	3-position	30	–	–	–	–	**SAX31.03**	**–**	**–**
	3-position	–	30	–	8	–	**–**	**SKD32.21**	**–**
AC 24 V [1]	3-position	120	120	120	–	–	**SAX81.00**	**SKD82.50**	**SKB82.50**
	3-position	–	120	120	8	10	**–**	**SKD82.51**	**SKB82.51**
	3-position	30	–	–	–	–	**SAX81.03**	**–**	**–**
	0...10 V, 4...20 mA	–	30	120	–	–	**–**	**SKD60**	**SKB60**
	0...10 V, 4...20 mA	–	30	120	15	10	**–**	**SKD62**	**SKB62**
AC/DC 24 V	0...10 V, 4...20 mA	30	–	–	–	–	**SAX61.03**	**–**	**–**
	Modbus RTU	30	30	120	15	10	**SAX61.03/MO**	**SKD62/MO**	**SKB62/MO**

PN 16	-25...150 °C [2]			DN	G [Inch]	k_{vs} [m³/h]	Δp_s [kPa]	Δp_{max} [kPa]	Δp_s [kPa]	Δp_{max} [kPa]	Δp_s [kPa]	Δp_{max} [kPa]
Data sheet	N4363	N4463										
	VVG41.11..12	–	–	15	G 1B	0.63 / 1	1600	800	1600	800	1600	800
	VVG41.13	–	**VXG41.1301** [3]	15	G 1B	1.6	1600	800	1600	800	1600	800
	VVG41.14	–	**VXG41.1401** [3]	15	G 1B	2.5	1600	800	1600	800	1600	800
	VVG41.15	**VXG41.15**	**VXG41.1501** [3]	15	G 1B	4	1600	800	1600	800	1600	800
	VVG41.20	**VXG41.20**	**VXG41.2001** [3]	20	G 1¼B	6.3	1600	800	1600	800	1600	800
	VVG41.25	**VXG41.25**	**VXG41.2501** [3]	25	G 1½B	10	1550	800	1600	800	1600	800
	VVG41.32	**VXG41.32**	**VXG41.3201** [3]	32	G 2B	16	875	800	1275	800	1600	800
	VVG41.40	**VXG41.40**	**VXG41.4001** [3]	40	G 2¼B	25	525	525	775	775	1600	800
	VVG41.50	**VXG41.50**	**VXG41.5001** [3]	50	G 2¾B	40	300	300	450	450	1225	800

Union nuts for threaded valves [4]

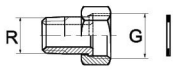

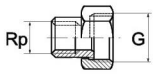

Type Set of 2	Set of 3	G [Inch]	R, Rp [Inch]	Material
ALG132	**ALG133**	G ½B	R ⅜ (External threading)	Brass
ALG142	**ALG143**	G ¾B	R ½ (External threading)	Brass
ALG122	**ALG123**	G ¾B	Rp ⅜	Malleable cast iron
ALG152	**ALG153**	G 1B	Rp ½	Malleable cast iron
ALG152B	**ALG153B**	G 1B	Rp ½	Brass
ALG202	**ALG203**	G 1¼B	Rp ¾	Malleable cast iron
ALG202B	**ALG203B**	G 1¼B	Rp ¾	Brass
ALG252	**ALG253**	G 1½B	Rp 1	Malleable cast iron
ALG252B	**ALG253B**	G 1½B	Rp 1	Brass
ALG322	**ALG323**	G 2B	Rp 1¼	Malleable cast iron
ALG322B	**ALG323B**	G 2B	Rp 1¼	Brass
ALG402	**ALG403**	G 2¼B	Rp 1½	Malleable cast iron
ALG402B	**ALG403B**	G 2¼B	Rp 1½	Brass
ALG502	**ALG503**	G 2¾B	Rp 2	Malleable cast iron
ALG502B	**ALG503B**	G 2¾B	Rp 2	Brass

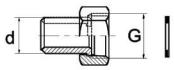

Type Set of 2	G [Inch]	Ø d [mm]	Material
ALS152	G ¾B	21.3	Steel, weldable
ALS202	G 1B	26.8	Steel, weldable
ALS252	G 1¼B	33.7	Steel, weldable

[1] SAX81..: AC/DC 24 V [2] SAX.. max. 130 °C [3] Max. 90 °C
[4] Valve side: cylindrical thread G according to ISO 228-1, pipe side: ALG.. with cylindrical Rp- or tapered R-thread according to ISO 7-1, pipe side: ALS.. with welded connection
VXG41.. valves contain only materials in contact with drinking water that comply with the UBA Positive List dated April 23, 2013, Categories B+C

Threaded globe valves

Typical applications	Actuators	Data sheet
– Boiler plants – Domestic hot water – Heating groups – Air handling units	**SAS..**	N4581

Operating voltage	Positioning signal	Positioning time [s]	Spring return function [s]	400 N	5.5 mm 400 N	400 N
AC 230 V	3-position	120	–	**SAS31.00**	–	–
	3-position	30	–	**SAS31.03**	–	–
	3-position	120	28	–	**SAS31.50**	–
	3-position	30	14	–	**SAS31.53**	–
AC/DC 24 V	0...10 V,	30	–	**SAS61.03**	–	–
	4...20 mA,	30	14	–	–	**SAS61.33**
	0...1000 Ω	30	14	–	**SAS61.53**	–
	3-position	120	–	**SAS81.00**	–	–
	3-position	30	–	**SAS81.03**	–	–
	3-position	30	14	–	–	**SAS81.33**
	Modbus RTU	30	–	**SAS61.03/MO**	–	–
	Modbus RTU	30	14	–	**SAS61.33/MO**	–

PN 16	1...120 °C			DN	G [Inch]	k_{vs} [m³/h]	Δp_s [kPa]	Δp_{max} [kPa]	Δp_s [kPa]	Δp_{max} [kPa]	Δp_s [kPa]	Δp_{max} [kPa]
Data sheet	N4364		N4464									
	VVG44.15-.. [1]		**VXG44.15-..**	15	G 1B	0.25 / 0.4 / 0.63	1600	400	1600	400	1600	400
	VVG44.15-..		**VXG44.15-..**	15	G 1B	1 / 1.6	725	400	725	400	725	400
	VVG44.15-..		**VXG44.15-..**	15	G 1B	2.5 / 4	400	400	400	400	400	400
	VVG44.20-6.3		**VXG44.20-6.3**	20	G 1¼B	6.3	750	400	750	400	750	400
	VVG44.25-10		**VXG44.25-10**	25	G 1½B	10	400	400	400	400	400	400
	VVG44.32-16		**VXG44.32-16**	32	G 2B	16	250	250	250	250	250	250
	VVG44.40-25		**VXG44.40-25**	40	G 2¼B	25	125	125	125	125	125	125

Typical applications	Actuators	Data sheet
– Boiler plants – Heating groups – Air handling units	**SSC..**	N4895, A6V12681511

Operating voltage	Positioning signal	Positioning time [s]	Spring return function [s]	5.5 mm 300 N
AC 230 V	3-position	150	–	**SSC31**
AC 24 V	3-position	150	–	**SSC81**
AC/DC 24 V	0...10 V	27,5	–	**SSC161.05HF**
	0...10 V	27,5	–	**SSC161.05UT**

PN 16	1...110 °C			DN	G [Inch]	k_{vs} [m³/h]	Δp_s [kPa]	Δp_{max} [kPa]
Data sheet	N4845		N4845					
	VVP45.20-4		**VXP45.20-4**	20	G 1B	4	350	350
	VVP45.25-6.3		**VXP45.25-6.3**	25	G 1¼B	6.3	300	300
	VVP45.25-10		**VXP45.25-10**	25	G 1½B	10	300	300
	VVP45.32-16		**VXP45.32-16**	32	G 2B	16	175	175
	VVP45.40-25		**VXP45.40-25**	40	G 2¼B	25	75	75

[1] .. = insert k_{vs} value

Typical applications	Actuators	Data sheet			5.5 mm	
– District heating – Boiler plants	SAT..	N4584			300 N	300 N
	Operating voltage	**Positioning signal**	**Positioning time [s]**	**Spring return function [s]**		
	AC 230 V	3-position	8	–	**SAT31.008**	–
		3-position	15	8	–	**SAT31.51**
	AC/DC 24 V	0...10 V, 4...20 mA, 0...1000 Ω	8	–	**SAT61.008**	–
			15	8	–	**SAT61.51**
		Modbus RTU	15	–	**SAT61.008/MO**	**SAT61.51/MO**
		Modbus RTU	15	8	–	**SAT61.51/MO**

PN 25 Data sheet	1...130 °C N4380	DN	G [Inch]	k_{vs} [m³/h]	Δp_s [kPa]	Δp_{max} [kPa]	Δp_s [kPa]	Δp_{max} [kPa]
	VVG549.15-.. [1)]	15	G ¾B	0.25 / 0.4 / 0.63	2500	1200	2500	1200
	VVG549.15-..	15	G 3¾B	1 / 1.6 / 2.5	2000	1200	2000	1200
	VVG549.20-4K	20	G 1B	4	1600	1200	1600	1200
	VVG549.25-6.3K	25	G 1¼B	6.3	1600	1200	1600	1200

8

Flanged globe valves

Typical applications	Actuators	Data sheet
– District heating	SAX..	N4501
– Boiler plants	SKD..	N4561
– Chiller plants	SKB..	N4564
– Domestic hot water	SKC..	N4566
– Heating groups	SAV..	N4503
– Air handling units		

Operating voltage	Positioning signal	Positioning time [s] SA..	SKD	SKB/C	Spring return function [s] SKD	SKB/C	20 mm 800 N	20 mm 1000 N	20 mm 2800 N	40 mm 1600 N	40 mm 2800 N
AC 230 V	3-position	120	120	120	–	–	**SAX31.00**	**SKD32.50**	**SKB32.50**	**SAV31.00**	**SKC32.60**
	3-position	–	120	120	8	10/18	–	**SKD32.51**	**SKB32.51**	–	**SKC32.61**
	3-position	30	–	–	–	–	**SAX31.03**	–	–	–	–
	3-position	–	30	–	8	–	–	**SKD32.21**	–	–	–
AC 24 V [1]	3-position	120	120	120	–	–	**SAX81.00**	**SKD82.50**	**SKB82.50**	**SAV81.00**	**SKC82.60**
	3-position	–	120	120	8	10/18	–	**SKD82.51**	**SKB82.51**	–	**SKC82.61**
	3-position	30	–	–	–	–	**SAX81.03**	–	–	–	–
	0...10 V, 4...20 mA	–	30	120	–	–	–	**SKD60**	**SKB60**	–	**SKC60**
	0...10 V, 4...20 mA	–	30	120	15	10/20	–	**SKD62**	**SKB62**	–	**SKC62**
AC/DC 24 V	0...10 V, 4...20 mA	30	–	–	–	–	**SAX61.03**	–	–	–	–
	0...10 V, 4...20 mA	120	–	–	–	–	–	–	–	**SAV61.00**	–
	Modbus RTU	30	30	120	15	10/20	**SAX61.03/MO**	**SKD62/MO**	**SKB62/MO**	**SAV61.00/MO**	**SKC62/MO**

PN 6	-10...130 °C		DN	k_{vs} [m³/h]	Δp_s [kPa]	Δp_{max} [kPa]	Δp_s [kPa]	Δp_{max} [kPa]	Δp_s [kPa]	Δp_{max} [kPa]	Δp_s [kPa]	Δp_{max} [kPa]	Δp_s [kPa]	Δp_{max} [kPa]
Data sheet	N4401	N4401												
VVF22.25-.. [2]	**VXF22.25-..**		25	2.5 / 4 / 6.3 / 10	600	300	600	300	600	300	–	–	–	–
VVF22.40-..	**VXF22.40-..**		40	16 / 25	550	300	600	300	600	300	600	300	–	–
VVF22.50-40	**VXF22.50-40**		50	40	350	300	450	300	600	300	600	300	–	–
VVF22.65-63	**VXF22.65-63**		65	63	200	150	250	200	600	300	450	300	–	–
VVF22.80-100	**VXF22.80-100**		80	100	125	75	175	125	450	300	250	225	–	–
VVF22.100-160	**VXF22.100-160**		100	160	–	–	–	–	–	–	160	125	300	250
PN 10	-10...150 °C [3]		DN	k_{vs} [m³/h]	Δp_s [kPa]	Δp_{max} [kPa]	Δp_s [kPa]	Δp_{max} [kPa]	Δp_s [kPa]	Δp_{max} [kPa]	Δp_s [kPa]	Δp_{max} [kPa]	Δp_s [kPa]	Δp_{max} [kPa]
Data sheet	N4402	N4402												
VVF32.15-.. [2]	**VXF32.15-..**		15	1.6 / 2.5 / 4	1000	400	1000	400	1000	400	–	–	–	–
VVF32.25-..	**VXF32.25-..**		25	6.3 / 10	1000	400	1000	400	1000	400	–	–	–	–
VVF32.40-..	**VXF32.40-..**		40	16 / 25	550	400	750	400	1000	400	1000	400	–	–
VVF32.50-40	**VXF32.50-40**		50	40	350	300	450	400	1000	400	750	400	–	–
VVF32.65-63	**VXF32.65-63**		65	63	200	150	250	200	700	400	450	400	–	–
VVF32.80-100	**VXF32.80-100**		80	100	125	75	175	125	450	400	250	225	–	–
VVF32.100-160	**VXF32.100-160**		100	160	–	–	–	–	–	–	160	125	300	250
VVF32.125-250	**VXF32.125-250**		125	250	–	–	–	–	–	–	125	90	190	160
VVF32.150-400	**VXF32.150-400**		150	400	–	–	–	–	–	–	80	60	125	100
PN 16	-10...150 °C [3]		DN	k_{vs} [m³/h]	Δp_s [kPa]	Δp_{max} [kPa]	Δp_s [kPa]	Δp_{max} [kPa]	Δp_s [kPa]	Δp_{max} [kPa]	Δp_s [kPa]	Δp_{max} [kPa]	Δp_s [kPa]	Δp_{max} [kPa]
Data sheet	N4403	N4403												
VVF42.15-.. [2]	**VXF42.15-..**		15	1.6 / 2.5 / 4	1600	400	1600	400	1600	400	–	–	–	–
VVF42.20-6.3	**VXF42.20-6.3**		20	6.3	1600	400	1600	400	1600	400	–	–	–	–
VVF42.25-..	**VXF42.25-..**		25	6.3 / 10	1600	400	1600	400	1600	400	–	–	–	–
VVF42.32-16	**VXF42.32-16**		32	16	900	400	1200	400	1600	400	–	–	–	–
VVF42.40-..	**VXF42.40-..**		40	16 / 25	550	400	750	400	1600	400	1250	400	–	–
VVF42.50-..	**VXF42.50-..**		50	31.5 / 40	350	300	450	400	1200	400	750	400	–	–
VVF42.65-..	**VXF42.65-..**		65	50 / 63	200	150	250	200	700	400	450	400	–	–
VVF42.80-..	**VXF42.80-..**		80	80 / 100	125	75	175	125	450	400	250	225	–	–
VVF42.100-..	**VXF42.100-..**		100	125 / 160	–	–	–	–	–	–	160	125	300	250
VVF42.125-..	**VXF42.125-..**		125	200 / 250	–	–	–	–	–	–	125	90	190	160
VVF42.150-..	**VXF42.150-..**		150	315 / 400	–	–	–	–	–	–	80	60	125	100
VVF42.50-40K [4]	–		50	40	1600	400	1600	400	1600	400	–	–	–	–
VVF42.65-63K [4]	–		65	63	1600	400	1600	400	1600	400	–	–	–	–
VVF42.80-100K [4]	–		80	100	1600	400	1600	400	1600	400	–	–	–	–
VVF42.100-160K [4]	–		100	160	–	–	–	–	–	–	1600	400	1600	400
VVF42.125-250K [4]	–		125	250	–	–	–	–	–	–	1600	400	1600	400
VVF42.150-360K [4]	–		150	360	–	–	–	–	–	–	1400	400	1600	400

[1] SAX81..: AC/DC 24 V
[2] .. = insert k_{vs} value
[3] SAX.. max. 130 °C; VVF43.., VXF43..: For DN 15...50 and k_{vs} values ≤ 40 m³/h see V..F53..
[4] Min. -5 °C

Flanged globe valves

Typical applications	Actuators	Data sheet
– District heating	SAX..	N4501
– Boiler plants	SKD..	N4561
– Chiller plants	SKB..	N4564
– Domestic hot water	SKC..	N4566
– Heating groups	SAV..	N4503
– Air handling units		

Operating voltage	Positioning signal	Positioning time [s] SA..	SKD	SKB/C	Spring return function [s] SKD	SKB/C	20 mm 800 N	20 mm 1000 N	20 mm 2800 N	40 mm 1600 N	40 mm 2800 N
AC 230 V	3-position	120	120	120	–	–	**SAX31.00**	**SKD32.50**	**SKB32.50**	**SAV31.00**	**SKC32.60**
	3-position	–	120	120	8	10/18	–	**SKD32.51**	**SKB32.51**	–	**SKC32.61**
	3-position	30	–	–	–	–	**SAX31.03**	–	–	–	–
	3-position	–	30	–	8	–	–	**SKD32.21**	–	–	–
AC 24 V [1]	3-position	120	120	120	–	–	**SAX81.00**	**SKD82.50**	**SKB82.50**	**SAV81.00**	**SKC82.60**
	3-position	–	120	120	8	10/18	–	**SKD82.51**	**SKB82.51**	–	**SKC82.61**
	3-position	30	–	–	–	–	**SAX81.03**	–	–	–	–
	0...10 V, 4...20 mA	–	30	120	–	–	–	**SKD60**	**SKB60**	–	**SKC60**
	0...10 V, 4...20 mA	–	30	120	15	10/20	–	**SKD62**	**SKB62**	–	**SKC62**
AC/DC 24 V	0...10 V, 4...20 mA	30	–	–	–	–	**SAX61.03**	–	–	–	–
	0...10 V, 4...20 mA	120	–	–	–	–	–	–	–	**SAV61.00**	–
	Modbus RTU	30	30	120	15	10/20	**SAX61.03/MO**	**SKD62/MO**	**SKB62/MO**	**SAV61.00/MO**	**SKC62/MO**

PN 16	-20...220 °C		DN	k_{vs} [m³/h]	Δp_s [kPa]	Δp_{max} [kPa]	Δp_s [kPa]	Δp_{max} [kPa]	Δp_s [kPa]	Δp_{max} [kPa]	Δp_s [kPa]	Δp_{max} [kPa]	Δp_s [kPa]	Δp_{max} [kPa]
Data sheet	N4404	N4404												
	VVF43.65-50	**VXF43.65-50**	65	50	–	–	–	–	–	–	450	400	700	650
	VVF43.65-63	**VXF43.65-63**	65	63	–	–	–	–	–	–	450	400	700	650
	VVF43.80-80	**VXF43.80-80**	80	80	–	–	–	–	–	–	250	225	450	400
	VVF43.80-100	**VXF43.80-100**	80	100	–	–	–	–	–	–	250	225	450	400
	VVF43.100-125	**VXF43.100-125**	100	125	–	–	–	–	–	–	160	125	300	250
	VVF43.100-160	**VXF43.100-160**	100	160	–	–	–	–	–	–	160	125	300	250
	VVF43.125-200	**VXF43.125-200**	125	200	–	–	–	–	–	–	125	90	190	160
	VVF43.125-250	**VXF43.125-250**	125	250	–	–	–	–	–	–	125	90	190	160
	VVF43.150-315	**VXF43.150-315**	150	315	–	–	–	–	–	–	80	60	125	100
	VVF43.150-400	**VXF43.150-400**	150	400	–	–	–	–	–	–	80	60	125	100
	VVF43.65-63K [4]	–	65	63	–	–	–	–	–	–	–	–	1600	800
	VVF43.80-100K [4]	–	80	100	–	–	–	–	–	–	–	–	1600	800
	VVF43.100-150K [4]	–	100	150	–	–	–	–	–	–	–	–	1600	800
	VVF43.125-220K [4]	–	125	220	–	–	–	–	–	–	–	–	1600	800
	VVF43.150-315K [4]	–	150	315	–	–	–	–	–	–	–	–	1600	800
	VVF43.200-450K [4]	–	200	450	–	–	–	–	–	–	–	–	1200	800
	VVF43.250-630K [4]	–	250	630	–	–	–	–	–	–	–	–	1000	800

[1] SAX81..: AC/DC 24 V
[2] .. = insert k_{vs} value
[3] SAX.. max. 130 °C; VVF43.., VXF43..: For DN 15...50 and k_{vs} values ≤ 40 m³/h see V..F53..
[4] Min. -5 °C

8

Flanged globe valves

Typical applications	Actuators	Data sheet
– District heating – Boiler plants – Chiller plants – Domestic hot water – Heating groups – Air handling units	SAX.. SKD.. SKB.. SKC.. SAV..	N4501 N4561 N4564 N4566 N4503

Operating voltage	Positioning signal	Positioning time [s] SA..	SKD	SKB/C	Spring return function [s] SKD	SKB/C	20 mm 800 N	20 mm 1000 N	20 mm 2800 N	40 mm 1600 N	40 mm 2800 N
AC 230 V	3-position	120	120	120	–	–	**SAX31.00**	**SKD32.50**	**SKB32.50**	**SAV31.00**	**SKC32.60**
	3-position	–	120	120	8	10/18	–	**SKD32.51**	**SKB32.51**	–	**SKC32.61**
	3-position	30	–	–	–	–	**SAX31.03**	–	–	–	–
	3-position	–	30	–	8	–	–	**SKD32.21**	–	–	–
AC 24 V	3-position	120	120	120	–	–	**SAX81.00**	**SKD82.50**	**SKB82.50**	**SAV81.00**	**SKC82.60**
	3-position	–	120	120	8	10/18	–	**SKD82.51**	**SKB82.51**	–	**SKC82.61**
	3-position	30	–	–	–	–	**SAX81.03**	–	–	–	–
	0...10 V, 4...20 mA	–	30	120	–	–	–	**SKD60**	**SKB60**	–	**SKC60**
	0...10 V, 4...20 mA	–	30	120	15	10/20	–	**SKD62**	**SKB62**	–	**SKC62**
AC/DC 24 V	0...10 V, 4...20 mA	30	–	–	–	–	**SAX61.03**	–	–	–	–
	0...10 V, 4...20 mA	120	–	–	–	–	–	–	–	**SAV61.00**	–
	Modbus RTU	30	30	120	15	10/20	**SAX61.03/MO**	**SKD62/MO**	**SKB62/MO**	**SAV61.00/MO**	**SKC62/MO**

PN 25	-20...220 °C [2]		DN	k_{vs} [m³/h]	Δp_s [kPa]	Δp_{max} [kPa]	Δp_s [kPa]	Δp_{max} [kPa]	Δp_s [kPa]	Δp_{max} [kPa]	Δp_s [kPa]	Δp_{max} [kPa]	Δp_s [kPa]	Δp_{max} [kPa]
Data sheet	N4405	N4405												
VVF53.15-.. [3]	**VXF53.15-..**	–	15	0.16 / 0.2 / 0.25 / 0.32 / 0.4 / 0.5 / 0.63	2500	1200	2500	1200	2500	1200	–	–	–	–
VVF53.15-..		–	15	0.8 / 1 / 1.25 / 2 / 3.2	2500	1200	2500	1200	2500	1200	–	–	–	–
VVF53.15-..		**VXF53.15-..**	15	1.6 / 2.5 / 4	2500	1200	2500	1200	2500	1200	–	–	–	–
VVF53.20-6.3		**VXF53.20-6.3**	20	6.3	2500	1200	2500	1200	2500	1200	–	–	–	–
VVF53.25-..		–	25	5 / 8	1600	1200	2100	1200	2500	1200	–	–	–	–
VVF53.25-..		**VXF53.25-..**	25	6.3 / 10	1600	1200	2100	1200	2500	1200	–	–	–	–
VVF53.32-16		**VXF53.32-16**	32	16	900	750	1200	1100	2500	1200	–	–	–	–
VVF53.40-..		–	40	12.5 / 20	550	500	750	650	2000	1200	–	–	–	–
VVF53.40-..		**VXF53.40-..**	40	16 / 25	550	500	750	650	2000	1200	1250	1150	–	–
VVF53.50-31.5		–	50	31.5	350	300	450	400	1200	1150	750	700	–	–
VVF53.50-40		**VXF53.50-40**	50	40	350	300	450	400	1200	1150	750	700	–	–
VVF53.65-63		**VXF53.65-63**	65	63	–	–	–	–	–	–	450	400	700	650
VVF53.80-100		**VXF53.80-100**	80	100	–	–	–	–	–	–	250	225	450	400
VVF53.100-160		**VXF53.100-160**	100	160	–	–	–	–	–	–	160	125	300	250
VVF53.125-250		**VXF53.125-250**	125	250	–	–	–	–	–	–	125	90	190	160
VVF53.150-400		**VXF53.150-400**	150	400	–	–	–	–	–	–	80	60	125	100
VVF53.50-40K [4]		–	50	36	–	–	2500	1250	2500	1250	–	–	–	–
VVF53.65-63K [4]		–	65	63	–	–	–	–	–	–	–	–	2500	1250
VVF53.80-100K [4]		–	80	100	–	–	–	–	–	–	–	–	2500	1250
VVF53.100-150K [4]		–	100	150	–	–	–	–	–	–	–	–	2500	1250
VVF53.125-220K [4]		–	125	220	–	–	–	–	–	–	–	–	2500	1250
VVF53.150-315K [4]		–	150	315	–	–	–	–	–	–	–	–	2500	1250
VVF53.200-450K [4]		–	200	450	–	–	–	–	–	–	–	–	1200	800
VVF53.250-630K [4]		–	250	630	–	–	–	–	–	–	–	–	1200	800

PN 40	-25...220 °C	DN	k_{vs} [m³/h]	Δp_s [kPa]	Δp_{max} [kPa]	Δp_s [kPa]	Δp_{max} [kPa]	Δp_s [kPa]	Δp_{max} [kPa]	Δp_s [kPa]	Δp_{max} [kPa]	Δp_s [kPa]	Δp_{max} [kPa]
Data sheet	A6V11459527												
VVF63.15-0.2		15	0.2	–	–	4000	2000	4000	2000	–	–	–	–
VVF63.15-0.32		15	0.32	–	–	4000	2000	4000	2000	–	–	–	–
VVF63.15-0.5		15	0.5	–	–	4000	2000	4000	2000	–	–	–	–
VVF63.15-0.8		15	0.8	–	–	4000	2000	4000	2000	–	–	–	–
VVF63.15-1.25		15	1.25	–	–	4000	2000	4000	2000	–	–	–	–
VVF63.15-2		15	2	–	–	4000	2000	4000	2000	–	–	–	–
VVF63.15-3.2		15	3.2	–	–	4000	2000	4000	2000	–	–	–	–
VVF63.20-6.3		20	5	–	–	3500	2000	4000	2000	–	–	–	–
VVF63.25-5		25	5	–	–	2100	2000	4000	2000	–	–	–	–
VVF63.25-8		25	8	–	–	2100	2000	4000	2000	–	–	–	–
VVF63.32-16		32	16	–	–	1200	1100	3200	2000	–	–	–	–
VVF63.40-12.5		40	12.5	–	–	750	650	2000	1800	–	–	–	–
VVF63.40-20		40	20	–	–	750	650	2000	1800	–	–	–	–
VVF63.50-31.5		50	31.5	–	–	450	400	1200	1150	–	–	–	–
VVF63.65-50		65	50	–	–	–	–	–	–	–	–	700	650
VVF63.80-80		80	80	–	–	–	–	–	–	–	–	450	400
VVF63.100-125		100	125	–	–	–	–	–	–	–	–	300	250
VVF63.125-200		125	200	–	–	–	–	–	–	–	–	175	160
VVF63.150-315		150	315	–	–	–	–	–	–	–	–	125	100

[1] SAX81..: AC/DC 24 V [2] SAX.. max. 130 °C [3] .. = insert k_{vs} value [4] Min. -5 °C

8

Flanged globe valves

Typical applications	Actuators	Data sheet
– District heating – Boiler plants – Chiller plants – Domestic hot water – Heating groups – Air handling units	SKD..	N4561
	SKB..	N4564
	SAV..	N4503
	SKC..	N4566

Operating voltage	Positioning signal	Positioning time [s] SKD	SKB/C	SAV	Spring return function [s] SKD	SKB/C	20 mm 1000 N	20 mm 2800 N	40 mm 2800 N
AC 230 V	3-position	120	120	120	–	–	**SKD32.50**	**SKB32.50**	**SKC32.60**
	3-position	120	120	–	8	10/18	**SKD32.51**	**SKB32.51**	**SKC32.61**
	3-position	30	–	–	8	–	**SKD32.21**	–	–
AC 24 V	3-position	120	120	120	–	–	**SKD82.50**	**SKB82.50**	**SKC82.60**
	3-position	120	120	–	8	10/18	**SKD82.51**	**SKB82.51**	**SKC82.61**
	0...10 V, 4...20 mA	30	120	120	–	–	**SKD60**	**SKB60**	**SKC60**
	0...10 V, 4...20 mA	30	120	–	15	10/20	**SKD62**	**SKB62**	**SKC62**
	Modbus RTU	30	120	120	15	10/20	**SKD62/MO**	**SKB62/MO**	**SKC62/MO**

PN 40 Data sheet	-25...220 °C A6V11459527	DN	k_{vs} [m³/h]	Δp_s [kPa]	Δp_{max} [kPa]	Δp_s [kPa]	Δp_{max} [kPa]	Δp_s [kPa]	Δp_{max} [kPa]
	VVF63.50-40K [1]	50	36	–	1500	4000	2000	–	–
	VVF63.65-63K [1]	65	63	–	–	–	–	4000	2000
	VVF63.80-100K [1]	80	100	–	–	–	–	4000	2000
	VVF63.100-150K [1]	100	150	–	–	–	–	4000	2000
	VVF63.125-220K [1]	125	220	–	–	–	–	4000	2000
	VVF63.150-315K [1]	150	315	–	–	–	–	4000	2000

PN 40 Data sheet	-25...220 °C A6V11459527	DN	k_{vs} [m³/h]	Δp_{max} [kPa] A→AB B	Δp_{max} [kPa] AB→A B	Δp_{max} [kPa] A→AB B	Δp_{max} [kPa] AB→A B	Δp_{max} [kPa] A→AB B	Δp_{max} [kPa] AB→A B
	VXF63.15-1.6	15	1.6	2000	200	2000	200	–	
	VXF63.15-2.5	15	2.5	2000	200	2000	200	–	
	VXF63.15-4	15	4	2000	200	2000	200	–	
	VXF63.20-6.3	20	6.3	2000	200	2000	200	–	
	VXF63.25-6.3	25	6.3	2000	200	2000	200	–	
	VXF63.25-10	25	10	2000	200	2000	200	–	
	VXF63.32-16	32	16	1100	200	2000	200	–	
	VXF63.40-16	40	16	650	200	2000	200	–	
	VXF63.40-25	40	25	650	200	2000	200	–	
	VXF63.50-31.5	50	31.5	400	200	1150	200	–	
	VXF63.65-50	65	50	–	–	–	–	650	200
	VXF63.80-80	80	80	–	–	–	–	400	200
	VXF63.100-125	100	125	–	–	–	–	250	150
	VXF63.125-200	125	200	–	–	–	–	160	100
	VXF63.150-315	150	315	–	–	–	–	100	70

[1] Min. -5 °C

Control ball valves

Typical applications	Actuators	Data sheet
– Domestic hot water	**GQD..9A**	N4659
– Heating groups	**GSD..9A**	A6V10636056
– Lüftungs- und Klimaanlagen	**GDB..9E**	A6V10636150
	GDB111.9E/KN	A6V10725318
– Chilled ceilings	**GMA..9E**	N4658
– VAV	**GLB..9E**	A6V10636203
– Fan coil units	**GLD..9E**	A6V11171770
– Zone control		

Operating voltage	Positioning signal	Positioning time [s] G..D	G..B	GMA	Spring return function [s]	2 Nm	5 Nm	7 Nm	10 Nm GLB 8 Nm GLD
AC 100...240 V	2/3-position	–	150	–	–	–	**GDB341.9E**	–	**GLB341.9E**
AC 24 V	KNX S-/LTE-Mode, KNX PL-Link	–	150	–	–	–	**GDB111.9E/KN**	–	**GLB111.9E/KN**
	Modbus RTU	–	150	–	–	–	**GDB111.9E/MO**	–	**GLB111.9E/MO**
AC/DC 24 V	3-position	30	–	90	15	**GQD131.9A**	–	**GMA131.9E**	–
	2/3-position	–	150	–	–	–	**GDB141.9E**	–	**GLB141.9E**
	0...10 V	30	–	90	15	**GQD161.9A**	–	**GMA161.9E**	–
	0/2...10 V	30	150	–	–	**GSD161.9A**	**GDB161.9E**	–	**GLB161.9E**
	0/2...10 V	30	–	–	–	–	**GDD161.9E**	–	**GLD161.9E**
	Modbus RTU	–	150	90	–	–	**GDB161.9E/MO**	**GMA161.9E/MO**	**GLB161.9E/MO**

PN 40	-10...120 °C		DN	G [Inch]	k_{vs} [m³/h]	Δp_s [kPa]	Δp_{max} [kPa]	Δp_s [kPa]	Δp_{max} [kPa]	Δp_s [kPa]	Δp_{max} [kPa]	Δp_s [kPa]	Δp_{max} [kPa]
Data sheet	N4211	N4211											
	VAG61.15-..[1]	**VBG61.15-..**	15	G 1B	1,6/2,5/4/6,3	1400	350	1400	350	1400	350	1400	350
	VAG61.15-..	–	15	G 1B	1	1400	350	1400	350	1400	350	1400	350
	VAG61.20-..	**VBG61.20-..**	20	G 1¼B	4/6,3	1400	350	1400	350	1400	350	1400	350
	VAG61.20-10	–	20	G 1¼B	10	1400	350	1400	350	1400	350	1400	350
	VAG61.25-10	**VBG61.25-10**	25	G 1½B	10	1400	350	1400	350	1400	350	1400	350
	VAG61.25-..	–	25	G 1½B	6,3/16	1400	350	1400	350	1400	350	1400	350
	VAG61.32-10	–	32	G 2B	10	–	–	–	–	1000	350	1000	350
	VAG61.32-16	**VBG61.32-16**	32	G 2B	16	–	–	–	–	1000	350	1000	350
	VAG61.32-25	–	32	G 2B	25	–	–	–	–	1000	350	1000	350
	VAG61.40-16	–	40	G 2¼B	16	–	–	–	–	800	350	800	350
	VAG61.40-25	**VBG61.40-25**	40	G 2¼B	25	–	–	–	–	800	350	800	350
	VAG61.40-40	–	40	G 2¼B	40	–	–	–	–	800	350	800	350
	VAG61.50-25	–	50	G 2¾B	25	–	–	–	–	600	350	600	350
	VAG61.50-40	**VBG61.50-40**	50	G 2¾B	40	–	–	–	–	600	350	600	350
	VAG61.50-63	–	50	G 2¾B	63	–	–	–	–	600	350	600	350

PN 40	-10...120 °C		DN	Rp [Inch]	k_{vs} [m³/h]	Δp_s [kPa]	Δp_{max} [kPa]	Δp_s [kPa]	Δp_{max} [kPa]	Δp_s [kPa]	Δp_{max} [kPa]	Δp_s [kPa]	Δp_{max} [kPa]
Data sheet	N4211	N4211											
	VAI61.15-..	**VBI61.15-..**	15	Rp ½	0,25/0,4/0,6	1400	350	1400	350	600	350	1400	350
	VAI61.15-..[1]	**VBI61.15-..**	15	Rp ½	1,6/2,5/4/6,3	1400	350	1400	350	1400	350	1400	350
	VAI61.15-..	–	15	Rp ½	1/10	1400	350	1400	350	1400	350	1400	350
	VAI61.20-..	**VBI61.20-..**	20	Rp ¾	4/6,3	1400	350	1400	350	1400	350	1400	350
	VAI61.20-10	–	20	Rp ¾	10	1400	350	1400	350	1400	350	1400	350
	VAI61.25-10	**VBI61.25-10**	25	Rp 1	10	1400	350	1400	350	1400	350	1400	350
	VAI61.25-..	–	25	Rp 1	6,3/16	1400	350	1400	350	1400	350	1400	350
	VAI61.32-10	–	32	Rp 1¼	10	–	–	–	–	1000	350	1000	350
	VAI61.32-16	**VBI61.32-16**	32	Rp 1¼	16	–	–	–	–	1000	350	1000	350
	VAI61.32-25	–	32	Rp 1¼	25	–	–	–	–	1000	350	1000	350
	VAI61.40-16	–	40	Rp 1½	16	–	–	–	–	800	350	800	350
	VAI61.40-25	**VBI61.40-25**	40	Rp 1½	25	–	–	–	–	800	350	800	350
	VAI61.40-40	–	40	Rp 1½	40	–	–	–	–	800	350	800	350
	VAI61.50-25	–	50	Rp 2	25	–	–	–	–	600	350	600	350
	VAI61.50-40	**VBI61.50-40**	50	Rp 2	40	–	–	–	–	600	350	600	350
	VAI61.50-63	**VBI61.50-63**	50	Rp 2	63	–	–	–	–	600	350	600	350

[1] .. = insert k_{vs} value; VBG61.. / VBI61..: For noiseless operation, the Δp_{max} value of 200 kPa should not be exceeded

6-port control ball valves

Typical applications	Actuators	Data sheet
– Heated and chilled ceilings – Fan coil units	**GSD..9A** **GDB..9E...** **GDB111.9E/KN**	A6V10636056 A6V10636150 A6V10725318

Operating voltage	Positioning signal	Positioning time [s] GSD	Positioning time [s] GDB	2 Nm	5 Nm	5 Nm	5 Nm
AC 100...240 V	2-position	–	150	–	**GDB341.9E**	–	–
AC 230 V	2-position	30	–	**GSD341.9A**	–	–	–
AC 24 V	KNX S-/LTE-Mode, KNX PL-Link	–	150	–	–	**GDB111.9E/KN**	–
AC/DC 24 V	2-position	30	150	**GSD141.9A**	**GDB141.9E**	–	–
	0/2...10 V	30	150	–	–	–	**GDB161.9E/6W**
	Modbus RTU	–	150	–	–	–	**GDB161.9E/MO6P**

PN 16 Data sheet	5...90 °C A6V10564480	DN	k_{vs} left [m³/h]	k_{vs} right [m³/h]	Δp_s [kPa]	Δp_{max} [kPa]	Δp_s [kPa]	Δp_{max} [kPa]	Δp_s [kPa]	Δp_{max} [kPa]	Δp_s [kPa]	Δp_{max} [kPa]
	VWG41.10-0.25-0.4	10	0.25	0.4	–	200	–	200	–	200	–	200
	VWG41.10-0.25-0.65	10	0.25	0.65	–	200	–	200	–	200	–	200
	VWG41.10-0.25-1.0	10	0.25	1	–	200	–	200	–	200	–	200
	VWG41.10-0.25-1.3	10	0.25	1.3	–	200	–	200	–	200	–	200
	VWG41.10-0.25-1.6	10	0.25	1.6	–	200	–	200	–	200	–	200
	VWG41.10-0.25-1.9	10	0.25	1.9	–	200	–	200	–	200	–	200
	VWG41.10-0.4-0.4	10	0.4	0.4	–	200	–	200	–	200	–	200
	VWG41.10-0.4-0.65	10	0.4	0.65	–	200	–	200	–	200	–	200
	VWG41.10-0.4-1.0	10	0.4	1	–	200	–	200	–	200	–	200
	VWG41.10-0.4-1.3	10	0.4	1.3	–	200	–	200	–	200	–	200
	VWG41.10-0.4-1.6	10	0.4	1.6	–	200	–	200	–	200	–	200
	VWG41.10-0.4-1.9	10	0.4	1.9	–	200	–	200	–	200	–	200
	VWG41.10-0.65-0.65	10	0.65	0.65	–	200	–	200	–	200	–	200
	VWG41.10-0.65-1.0	10	0.65	1	–	200	–	200	–	200	–	200
	VWG41.10-0.65-1.3	10	0.65	1.3	–	200	–	200	–	200	–	200
	VWG41.10-0.65-1.6	10	0.65	1.6	–	200	–	200	–	200	–	200
	VWG41.10-0.65-1.9	10	0.65	1.9	–	200	–	200	–	200	–	200
	VWG41.10-1.0-1.0	10	1	1	–	200	–	200	–	200	–	200
	VWG41.10-1.0-1.3	10	1	1.3	–	200	–	200	–	200	–	200
	VWG41.10-1.0-1.6	10	1	1.6	–	200	–	200	–	200	–	200
	VWG41.10-1.0-1.9	10	1	1.9	–	200	–	200	–	200	–	200
	VWG41.10-1.3-1.3	10	1.3	1.3	–	200	–	200	–	200	–	200
	VWG41.10-1.3-1.6	10	1.3	1.6	–	200	–	200	–	200	–	200
	VWG41.10-1.3-1.9	10	1.3	1.9	–	200	–	200	–	200	–	200
	VWG41.10-1.6-1.6	10	1.6	1.6	–	200	–	200	–	200	–	200
	VWG41.10-1.6-1.9	10	1.6	1.9	–	200	–	200	–	200	–	200
	VWG41.10-1.9-1.9	10	1.9	1.9	–	200	–	200	–	200	–	200
	VWG41.20-0.25-2.5	20	0.25	2.5	–	–	–	200	–	200	–	200
	VWG41.20-0.25-3.45	20	0.25	3.45	–	–	–	200	–	200	–	200
	VWG41.20-0.25-4.25	20	0.25	4.25	–	–	–	200	–	200	–	200
	VWG41.20-0.4-2.5	20	0.4	2.5	–	–	–	200	–	200	–	200
	VWG41.20-0.4-3.45	20	0.4	3.45	–	–	–	200	–	200	–	200
	VWG41.20-0.4-4.25	20	0.4	4.25	–	–	–	200	–	200	–	200
	VWG41.20-0.65-2.5	20	0.65	2.5	–	–	–	200	–	200	–	200
	VWG41.20-0.65-3.45	20	0.65	3.45	–	–	–	200	–	200	–	200
	VWG41.20-0.65-4.25	20	0.65	4.25	–	–	–	200	–	200	–	200
	VWG41.20-1.0-2.5	20	1	2.5	–	–	–	200	–	200	–	200
	VWG41.20-1.0-3.45	20	1	3.45	–	–	–	200	–	200	–	200
	VWG41.20-1.0-4.25	20	1	4.25	–	–	–	200	–	200	–	200
	VWG41.20-1.3-2.5	20	1.3	2.5	–	–	–	200	–	200	–	200
	VWG41.20-1.3-3.45	20	1.3	3.45	–	–	–	200	–	200	–	200
	VWG41.20-1.3-4.25	20	1.3	4.25	–	–	–	200	–	200	–	200
	VWG41.20-1.6-2.5	20	1.6	2.5	–	–	–	200	–	200	–	200
	VWG41.20-1.6-3.45	20	1.6	3.45	–	–	–	200	–	200	–	200
	VWG41.20-1.6-4.25	20	1.6	4.25	–	–	–	200	–	200	–	200
	VWG41.20-2.5-2.5	20	2.5	2.5	–	–	–	200	–	200	–	200
	VWG41.20-2.5-3.45	20	2.5	3.45	–	–	–	200	–	200	–	200
	VWG41.20-2.5-4.25	20	2.5	4.25	–	–	–	200	–	200	–	200
	VWG41.20-3.45-3.45	20	3.45	3.45	–	–	–	200	–	200	–	200
	VWG41.20-4.25-4.25	20	4.25	4.25	–	–	–	200	–	200	–	200

Fittings for 6-port control ball valves

Type	Description
ALN15.152B **ALN15.202B**	Fittings set made of brass for media temperatures up to 90 °C, consisting of 2x cap nuts, 2x inserts with external threading per ISO 228-1, 2x flat seals
ALG13.152B **ALG15.152B** **ALG15.202B** **ALG15.252B**	Fittings set made of brass for media temperatures up to 90 °C, consisting of 2x cap nuts with sleeves and insert per ISO 7-1, 2x flat seals

6-port compact control ball valves

Typical applications	Actuators	Data sheet			2 Nm	5 Nm	5 Nm	5 Nm
– Heated and chilled ceilings – Fan coil units	**GSD..9A** **GDB..9E...** **GDB111.9E/KN**	A6V10636056 A6V10636150 A6V10725318						
	Operating voltage	**Positioning signal**	**Positioning time [s]** GSD	GDB				
	AC 100...240 V	2-position	–	150	–	**GDB341.9E**	–	–
	AC 230 V	2-position	30	–	**GSD341.9A**	–	–	–
	AC 24 V	KNX S-/LTE-Mode, KNX PL-Link	–	150	–	–	**GDB111.9E/KN**	–
	AC/DC 24 V	2-position	30	150	**GSD141.9A**	**GDB141.9E**	–	–
		0/2...10 V	30	150	–	–	–	**GDB161.9E/6W**
		Modbus RTU	–	150	–	–	–	**GDB161.9E/MO6P**

PN 16 Data sheet	5...90 °C A6V10564480	DN	k_{vs} left [m³/h]	k_{vs} right [m³/h]	Δp_s [kPa]	Δp_{max} [kPa]	Δp_s [kPa]	Δp_{max} [kPa]	Δp_s [kPa]	Δp_{max} [kPa]	Δp_s [kPa]	Δp_{max} [kPa]
	VWG42.10-0.25-0.25	10	0.25	0.25	–	200	–	200	–	200	–	200
	VWG42.10-0.25-0.4	10	0.25	0.4	–	200	–	200	–	200	–	200
	VWG42.10-0.25-0.65	10	0.25	0.65	–	200	–	200	–	200	–	200
	VWG42.10-0.25-1.0	10	0.25	1.0	–	200	–	200	–	200	–	200
	VWG42.10-0.25-1.6	10	0.25	1.6	–	200	–	200	–	200	–	200
	VWG42.10-0.25-1.95	10	0.25	1.95	–	200	–	200	–	200	–	200
	VWG42.10-0.4-0.4	10	0.4	0.4	–	200	–	200	–	200	–	200
	VWG42.10-0.4-0.65	10	0.4	0.65	–	200	–	200	–	200	–	200
	VWG42.10-0.4-1.0	10	0.4	1.0	–	200	–	200	–	200	–	200
	VWG42.10-0.4-1.3	10	0.4	1.3	–	200	–	200	–	200	–	200
	VWG42.10-0.4-1.6	10	0.4	1.6	–	200	–	200	–	200	–	200
	VWG42.10-0.4-1.95	10	0.4	1.95	–	200	–	200	–	200	–	200
	VWG42.10-0.65-0.65	10	0.65	0.65	–	200	–	200	–	200	–	200
	VWG42.10-0.65-1.0	10	0.65	1.0	–	200	–	200	–	200	–	200
	VWG42.10-0.65-1.3	10	0.65	1.3	–	200	–	200	–	200	–	200
	VWG42.10-0.65-1.6	10	0.65	1.6	–	200	–	200	–	200	–	200
	VWG42.10-0.65-1.95	10	0.65	1.95	–	200	–	200	–	200	–	200
	VWG42.10-1.0-1.0	10	1.0	1.0	–	200	–	200	–	200	–	200
	VWG42.10-1.0-1.3	10	1.0	1.3	–	200	–	200	–	200	–	200
	VWG42.10-1.0-1.6	10	1.0	1.6	–	200	–	200	–	200	–	200
	VWG42.10-1.0-1.95	10	1.0	1.9	–	200	–	200	–	200	–	200
	VWG42.10-1.3-1.3	10	1.3	1.3	–	200	–	200	–	200	–	200
	VWG42.10-1.3-1.6	10	1.3	1.6	–	200	–	200	–	200	–	200
	VWG42.10-1.3-1.95	10	1.3	1.95	–	200	–	200	–	200	–	200
	VWG42.10-1.6-1.6	10	1.6	1.6	–	200	–	200	–	200	–	200
	VWG42.10-1.6-1.95	10	1.6	1.95	–	200	–	200	–	200	–	200
	VWG42.10-1.9-1.95	10	1.95	1.95	–	200	–	200	–	200	–	200

[1] P = media containing mineral oil [2] .. = insert k_{vs} value [3] Parts that are in contact with medium in stainless steel
MXG461B.. valves contain only materials in contact with drinking water that comply with the UBA Positive List dated April 23, 2013, Categories B+C

Magnetic valves

Typical applications	Valve type	Operating voltage	Positioning signal	Type suffix
– District heating	**MXF461..**	AC/DC 24 V	0...10 V, 2...10 V, 4...20 mA	P [1)]
– Boiler plants	**M3P..FY..**	AC 24 V	0...10 V, 4...20 mA	P [1)]
– Chiller plants	**MVF461H..**	AC/DC 24 V	0...10 V, 2...10 V, 0...20 mA, 4...20 mA	–
– Domestic hot water	**MXG461..**	AC/DC 24 V	0...10 V, 2...10 V, 4...20 mA	P [1)]
– Heating groups	**MXG461B..**	AC/DC 24 V	0...10 V, 2...10 V, 0...20 mA, 4...20 mA	–
– Air handling units	**MXG461S..**	AC/DC 24 V	0...10 V, 2...10 V, 4...20 mA	–
	MXG462S..	AC/DC 24 V	0...10 V, 2...10 V, 0...20 mA, 4...20 mA	–

PN 16	1...130 °C	DN	k_{vs} [m³/h]	Δp_s [kPa]	Δp_{max} [kPa]	**Note**
Data sheet	N4455					
	MXF461.15-.. [2)]	15	0.6 / 1.5 / 3	300	300	To be used as 2-port or mixing valves, not as diverting valves. Selectable valve characteristic: equal-percentage or linear.
	MXF461.20-5.0	20	5	300	300	
	MXF461.25-8.0	25	8	300	300	
	MXF461.32-12	32	12	300	300	
	MXF461.40-20	40	20	300	300	
	MXF461.50-30	50	30	300	300	
	MXF461.65-50	65	50	300	300	
	1...120 °C	DN	k_{vs} [m³/h]	Δp_s [kPa]	Δp_{max} [kPa]	
	N4454					
	M3P80FY	80	80	300	300	
	M3P100FY	100	130	200	200	
PN 16	1...180 °C	DN	k_{vs} [m³/h]	Δp_s [kPa]	Δp_{max} [kPa]	
Data sheet	N4361					
	MVF461H15-.. [2)]	15	0.6 / 1.5 / 3	1000	1000	
	MVF461H20-5	20	5	1000	1000	
	MVF461H25-8	25	8	1000	1000	
	MVF461H32-12	32	12	1000	1000	
	MVF461H40-20	40	20	1000	1000	
	MVF461H50-30	50	30	1000	1000	

PN 16	1...130 °C	DN	G [Inch]	k_{vs} [m³/h]	Δp_s [kPa]	Δp_{max} [kPa]
Data sheet	N4455					
	MXG461.15-.. [2)]	15	G 1B	0.6 / 1.5 / 3	300	300
	MXG461.20-5.0	20	G 1¼B	5	300	300
	MXG461.25-8.0	25	G 1½B	8	300	300
	MXG461.32-12	32	G 2B	12	300	300
	MXG461.40-20	40	G 2¼B	20	300	300
	MXG461.50-30	50	G 2¾B	30	300	300
PN 16	-20...130 °C	DN	G [Inch]	k_{vs} [m³/h]	Δp_s [kPa]	Δp_{max} [kPa]
Data sheet	N4461					
	MXG461B15-.. [2)]	15	G 1B	0.6 / 1.5 / 3	1000	1000
	MXG461B20-5	20	G 1¼B	5	800	800
	MXG461B25-8	25	G 1½B	8	700	700
	MXG461B32-12	32	G 2B	12	600	600
	MXG461B40-20	40	G 2¼B	20	600	600
	MXG461B50-30	50	G 2¾B	30	600	600

PN 16	1...130 °C	-20...130 °C	DN	G [Inch]	k_{vs} [m³/h]	Δp_s [kPa]	Δp_{max} [kPa]	**Note**
Data sheet	N4465	N4466						
	MXG461S15-1.5	–	15	G 1B	1.5	300	300	To be used as 2-port or mixing valves, not as diverting valves. Selectable valve characteristic: equal-percentage or linear. [3)]
	MXG461S20-5.0	–	20	G 1¼B	5	300	300	
	MXG461S25-8.0	–	25	G 1½B	8	300	300	
	MXG461S32-12	–	32	G 2B	12	300	300	
		MXG462S40-20	40	G 2¼B	20	600	600	
	–	**MXG462S50-30**	50	G 2¾B	30	600	600	

8

Slipper valves

Typical applications	Actuators	Data sheet		10 Nm	10 Nm
– Boiler plants – Heating groups	SAL..	N4502			
	Operating voltage	**Positioning signal**	**Positioning time [s]**		
	AC 230 V	3-position	120	**SAL31.00T10**	**SAL31.00T10**
		3-position	30	**SAL31.03T10**	**SAL31.03T10**
	AC/DC 24 V	3-position	120	**SAL81.00T10**	**SAL81.00T10**
		3-position	30	**SAL81.03T10**	**SAL81.03T10**
		0...10 V, 4...20 mA	120	**SAL61.00T10**	**SAL61.00T10**
		0...10 V, 4...20 mA	30	**SAL61.03T10**	**SAL61.03T10**
	Mounting set			**ASK32N**	**ASK31N**

PN 6	1...120 °C	DN	k_{vs} [m³/h]	Δp_{max} [kPa]	Δp_{max} [kPa]
Data sheet	N4241				
	VBF21.40	40	25	30	–
	VBF21.50	50	40	30	–
	VBF21.65	65	63	–	30
	VBF21.80	80	100	–	30
	VBF21.100	100	160	–	30
	VBF21.125	125	550	–	30
	VBF21.150	150	820	–	30

Butterfly valves

Typical applications	Actuators	Data sheet		Rotation angle 90° 10 Nm
– Boiler plants – Chiller plants – Heating groups	SAL..	N4502		
	Operating voltage	**Positioning signal**	**Positioning time [s]**	
	AC 230 V	3-Punkt	125	–
		3-Punkt	30	**SAL31.03T10/F05**
	AC/DC 24 V	3-Punkt	30	**SAL81.03T10/F05**
		0...10 V, 4...20 mA	30	**SAL61.03T10/F05**

PN 6/10/16	-20...120 °C	DN	k_{vs} [m³/h]	Δp_s [kPa]
Data sheet	A6V101029254			
	VFW41.40U	40	40	500
	VFW41.50U	50	100	500
	VFW41.65U	65	155	500
	VFW41.80U	80	260	500
	VFW41.100U	100	520	500
	VFW41.125U	125	820	300
	VFW41.150U	150	1600	250
	VFW41.200U	200	4000	125

Typical applications	Actuators	Data sheet
– Boiler plants – Chiller plants – Cooling towers – Domestic hot water – Heating groups	**SAL..** **SQL3...**	N4502 A6V13343014

Operating voltage	Positioning signal	Positioning time [s]	Rotation angle 90° 20 Nm	40 Nm	25 Nm	40 Nm	100 Nm	400 Nm	1200 Nm
AC 230 V	3-position	39	–	–	–	–	**SQL341E100**	–	–
	3-position	47	–	–	–	–	–	**SQL341E400**	**SQL341E200**
	3-position	11	–	–	**SQL341E25**	–	–	–	
	3-position	22	–	–	–	**SQL341E40**	–	–	–
	3-position	120	**SAL31.00T20**	**SAL31.00T40**	–	–	–	–	–
AC/DC 24 V	3-position	120	**SAL81.00T20**	**SAL81.00T40**	–	–	–	–	–
	0...10 V, 4...20 mA	120	**SAL61.00T20**	**SAL61.00T40**	–	–	–	–	–
	0...10 V, 4...20 mA	11	–	–	**SQL361E25**	–	–	–	–
	0...10 V, 4...20 mA	22	–	–	–	**SQL361E40**	–	–	–
	0...10 V, 4...20 mA	39	–	–	–	–	**SQL361E100**	–	–
	0...10 V, 4...20 mA	47	–	–	–	–	–	**SQL361E400**	–
	0...10 V, 4...20 mA	47	–	–	–	–	–	–	**SQL361E200**

PN 16 Data sheet	-20...120 °C A6V12436917	DN	k_{vs} [m³/h]	Δp_s [kPa]	Δp_s [kPa]	Δp_s [kPa]	Δp_s [kPa]	Δp_s [kPa]	Δp_s [kPa]	Δp_s [kPa]
	VFW41.40	40	40	1600	–	1600	–	–	–	–
	VFW41.50	50	100	1600	–	1600	–	–	–	–
	VFW41.65	65	155	1600	–	1600	–	–	–	–
	VFW41.80	80	260	–	1600	–	1600	–	–	–
	VFW41.100	100	520	–	1200	–	1600	–	–	–
	VFW41.125	125	820	–	800	–	1000	–	–	–
	VFW41.150	150	1600	–	–	–	–	1600	–	–
	VFW41.200	200	4000	–	–	–	–	1000	–	–
	VFW41.250	250	4550	–	–	–	–	–	1000	–
	VFW41.300	300	7200	–	–	–	–	–	1000	–
	VFW41.350	350	10250	–	–	–	–	–	600	–
	VFW41.400	400	14100	–	–	–	–	–	300	–
	VFW41.450	450	18500	–	–	–	–	–	–	300
	VFW41.500	500	24000	–	–	–	–	–	–	300
	VFW41.600	600	31000	–	–	–	–	–	–	300

PN 16 Data sheet	-20...120 °C A6V12436917	DN	k_{vs} [m³/h]	Δp_s [kPa]	Δp_s [kPa]	Δp_s [kPa]	Δp_s [kPa]	Δp_s [kPa]	Δp_s [kPa]	Δp_s [kPa]
	VFL41.40	40	40	1600	–	1600	–	–	–	–
	VFL41.50	50	100	1600	–	1600	–	–	–	–
	VFL41.65	65	155	1600	–	1600	–	–	–	–
	VFL41.80	80	260	–	1600	–	1600	–	–	–
	VFL41.100	100	520	–	1200	–	1600	–	–	–
	VFL41.125	125	820	–	800	–	1000	–	–	–
	VFL41.150	150	1600	–	–	–	–	1600	–	–
	VFL41.200	200	4000	–	–	–	–	1000	–	–
	VFL41.250	250	4550	–	–	–	–	–	1000	–
	VFL41.300	300	7200	–	–	–	–	–	1000	–
	VFL41.350	350	10250	–	–	–	–	–	600	–
	VFL41.400	400	14100	–	–	–	–	–	300	–
	VFL41.450	450	18500	–	–	–	–	–	–	300
	VFL41.500	500	24000	–	–	–	–	–	–	300
	VFL41.600	600	31000	–	–	–	–	–	–	300

Hand-held adjuster (Type)

Typ	For VFW41../VFL41.. DN40	DN50	DN65	DN80	DN100	DN125	DN150	DN200	DN250	DN300	DN350	DN400
ASK41NF04SP	■	■	■									
ASK41NF05SP				■	■	■						
ASK41NF07SP							■	■				
ASK41NF10SP									■	■	■	■

Recommended maximum flow velocity: VKF41..: < 4 m/s for water

Changeover and open/close ball valves

Typical applications	Actuators	Data sheet
– Boiler plants – Chiller plants – Domestic hot water – Heating groups	**GQD..9A**	N4659
	GSD..9A	N4655
	GMA..9E	N4658
	GLB..9E	A6V10636203
	GDB..9E.	A6V10636150

Operating voltage	Positioning signal	Positioning time [s] GQD/GSD	GMA	G..B	Spring return function [s]	2 Nm	5 Nm	7 Nm	10 Nm
AC 230 V	2-position	30	90	–	15	**GQD321.9A**	–	**GMA321.9E**	–
	2-position	30	–	–	–	**GSD341.9A**	–	–	–
AC 100...240 V	2/3-position	–	–	150	–	–	**GDB341.9E**	–	**GLB341.9E**
AC/DC 24 V	2-position	30	90	–	15	**GQD121.9A**	–	**GMA121.9E**	–
	2-position	30	–	–	–	**GSD141.9A**	–	–	–
	2/3-position	–	–	150	–	–	**GDB141.9E**	–	**GLB141.9E**

PN 40 Data sheet	-10...120 °C N4214	DN	G [Inch]	k_{vs} [m³/h]	Δp_s [kPa]	Δp_{max} [kPa]	Δp_s [kPa]	Δp_{max} [kPa]	Δp_s [kPa]	Δp_{max} [kPa]	Δp_s [kPa]	Δp_{max} [kPa]
	VAG60.15-9	15	G 1B	9	1400	350	1400	350	1400	350	1400	350
	VAG60.20-17	20	G 1 ¼B	17	1400	350	1400	350	1400	350	1400	350
	VAG60.25-22	25	G 1 ½B	22	1400	350	1400	350	1400	350	1400	350
	VAG60.32-35	32	G 2B	35	–	–	–	–	1000	350	1000	350
	VAG60.40-68	40	G 2 ¼B	68	–	–	–	–	800	350	800	350
	VAG60.50-96	50	G 2 ¾B	96	–	–	–	–	600	350	600	350

PN 40 Data sheet	-10...120 °C N4214	DN	G [Inch]	k_{vs} [m³/h]	Δp_{max} [kPa]	Δp_{max} [kPa]	Δp_{max} [kPa]	Δp_{max} [kPa]
	VBG60.15-8T	15	G 1B	8	350	350	350	350
	VBG60.20-13T	20	G 1 ¼B	13	350	350	350	350
	VBG60.25-13T	25	G 1 ½B	13	350	350	350	350
	VBG60.32-25T	32	G 2B	25	–	–	350	350
	VBG60.40-49T	40	G 2 ¼B	49	–	–	350	350
	VBG60.50-73T	50	G 2 ¾B	73	–	–	350	350

PN 40 Data sheet	-10...120 °C N4214	DN	G [Inch]	k_{vs} [m³/h]	Δp_{max} [kPa]	Δp_{max} [kPa]	Δp_{max} [kPa]	Δp_{max} [kPa]
	VBG60.15-5 L	15	G 1B	5	350	350	350	350
	VBG60.20-8 L	20	G 1 ¼B	8	350	350	350	350
	VBG60.25-9 L	25	G 1 ½B	9	350	350	350	350
	VBG60.32-13 L	32	G 2B	13	–	–	350	350
	VBG60.40-25 L	40	G 2 ¼B	25	–	–	350	350
	VBG60.50-37 L	50	G 2 ¾B	37	–	–	350	350

PN 40 Data sheet	-10...120 °C N4214	DN	Rp [Inch]	k_{vs} [m³/h]	Δp_s [kPa]	Δp_{max} [kPa]	Δp_s [kPa]	Δp_{max} [kPa]	Δp_s [kPa]	Δp_{max} [kPa]	Δp_s [kPa]	Δp_{max} [kPa]
	VAI60.15-15	15	Rp ½	15	1400	350	1400	350	1400	350	1400	350
	VAI60.20-22	20	Rp ¾	22	1400	350	1400	350	1400	350	1400	350
	VAI60.25-22	25	Rp 1	22	1400	350	1400	350	1400	350	1400	350
	VAI60.32-35	32	Rp 1¼	35	–	–	–	–	1000	350	1000	350
	VAI60.40-68	40	Rp 1½	68	–	–	–	–	800	350	800	350
	VAI60.50-96	50	Rp 2	96	–	–	–	–	600	350	600	350

PN 40 Data sheet	-10...120 °C N4214	DN	Rp [Inch]	k_{vs} [m³/h]	Δp_{max} [kPa]	Δp_{max} [kPa]	Δp_{max} [kPa]	Δp_{max} [kPa]
	VBI60.15-12T	15	Rp ½	12	350	350	350	350
	VBI60.20-16T	20	Rp ¾	16	350	350	350	350
	VBI60.25-16T	25	Rp 1	16	350	350	350	350
	VBI60.32-25T	32	Rp 1¼	25	–	–	350	350
	VBI60.40-49T	40	Rp 1½	49	–	–	350	350
	VBI60.50-73T	50	Rp 2	73	–	–	350	350

PN 40 Data sheet	-10...120 °C N4214	DN	Rp [Inch]	k_{vs} [m³/h]	Δp_{max} [kPa]	Δp_{max} [kPa]	Δp_{max} [kPa]	Δp_{max} [kPa]
	VBI60.15-5L	15	Rp ½	5	350	350	350	350
	VBI60.20-9L	20	Rp ¾	9	350	350	350	350
	VBI60.25-9L	25	Rp 1	9	350	350	350	350
	VBI60.32-13L	32	Rp 1¼	13	–	–	350	350
	VBI60.40-25L	40	Rp 1½	25	–	–	350	350
	VBI60.50-37L	50	Rp 2	37	–	–	350	350

Refrigerant valves

Typical applications	Valve	Operating voltage	Positioning signal	Auxiliary functions
– Chiller plants	**M2FP03GX**	AC 24 V	0...10 V, 4...20 mA, 0...20 Phs	–
	MVL661..[1]	AC/DC 24 V	0...10 V, 2...10 V, 0...20 mA, 4...20 mA	Minimum stroke setting
	MVS661..N[1]	AC/DC 24 V	0...10 V, 2...10 V, 0...20 mA, 4...20 mA	Minimum stroke setting
	M3FB..LX..	AC 24 V	0...10 V, 4...20 mA, 0...20 Phs	–
	M3FK..LX..	AC 24 V	0...10 V, 4...20 mA, 0...20 Phs	–

PN 32	-40...100 °C				k_{vs} [m³/h]		Δp_{max} [kPa]
Data sheet	N4731						
	M2FP03GX		Pilot valve		0.3		1800
PS 45	-40...120 °C	DN	Connection	Inner ∅ [Inch]	k_{vs} [m³/h]	k_{vs} reduced [m³/h]	Δp_{max} [kPa]
Data sheet	N4714						
	MVL661.15-0.4	15	Sleeve	⅝	0.4	0.25	2500
	MVL661.15-1.0	15	Sleeve	⅝	1	0.63	2500
	MVL661.20-2.5	20	Sleeve	⅞	2.5	1.6	2500
	MVL661.25-6.3	25	Sleeve	1⅛	6.3	4	2500
	MVL661.32-10	32	Sleeve	1⅜	10	6.3	1600
	MVL661.32-12	32	Sleeve	1⅜	12	7.6	200
PN 63	-40...120 °C	DN	Connection	Inner ∅ [mm] / Outer ∅ [mm]	k_{vs} [m³/h]	k_{vs} reduced [m³/h]	Δp_{max} [kPa]
Data sheet	N4717						
	MVS661.25-016N	25	Weldable, solderable	22.4 / 33.7	0.16	0.1	2500
	MVS661.25-0.4N	25	Weldable, solderable	22.4 / 33.7	0.4	0.25	2500
	MVS661.25-1.0N	25	Weldable, solderable	22.4 / 33.7	1	0.63	2500
	MVS661.25-2.5N	25	Weldable, solderable	22.4 / 33.7	2.5	1.6	2500
	MVS661.25-6.3N	25	Weldable, solderable	22.4 / 33.7	6.3	4	2500
PN 32	-40...120 °C	DN	Connection	Inner ∅ [Inch]	k_{vs} [m³/h]	Liquid Δp_{max} [kPa]	Gas Δp_{max} [kPa]
Data sheet	N4722						
	M3FK15LX06	15	Sleeve	⅝	0.6	200	800
	M3FK15LX15	15	Sleeve	⅝	1.5	200	800
	M3FK15LX	15	Sleeve	⅝	3	200	800
	M3FK20LX	20	Sleeve	⅞	5	200	800
	M3FK25LX	25	Sleeve	1⅛	8	200	800
	M3FK32LX	32	Sleeve	1⅜	12	200	800
	M3FK40LX	40	Sleeve	1⅝	20	200	800
	M3FK50LX	50	Sleeve	2⅛	30	200	800
PS 43	-40...120 °C	DN	Connection	Inner ∅ [Inch]	k_{vs} [m³/h]	Δp_{max} [kPa]	
Data sheet	N4721						
	M3FB15LX06/A	15	Sleeve	⅝	0.6	2200	
	M3FB15LX15/A	15	Sleeve	⅝	1.5	2200	
	M3FB15LX/A	15	Sleeve	⅝	3	2200	
	M3FB20LX/A	20	Sleeve	⅞	5	1800	
	M3FB25LX/A	25	Sleeve	1⅛	8	1200	
	M3FB32LX	32	Sleeve	1⅜	12	800	

[1] Also available as ATEX Zone 2

Symbols

	3-port valve, control path with equal-percentage valve characteristic, bypass with linear valve characteristic.
	3-port valve, control path with equal-percentage valve characteristic, bypass with linear valve characteristic with 70% of the k_{VS} value. This compensates for the flow resistance of the heat exchanger, so that the total volumetric flow $\dot{V}_{100}$ remains as constant as possible.
	2-port valve or 6-port control ball valve in the respective control path with linear valve characteristic.
	3-port, control path and bypass with linear valve characteristic. Bypass with 70% of the k_{vs} value. This compensates for the flow resistance of the heat exchanger, so that the total flow amount $\dot{V}_{100}$ remains as constant as possible.
	3-port valve, control path and bypass with linear valve characteristic.
	3-port valve, control path and bypass with equal-percentage valve characteristic.

Notes

Definitions

Abbr.	Term	Unit	Definition
Δp	Differential pressure	kPa	Pressure differential between plant sections.
Δp_{max}	Maximum differential pressure	kPa	Maximum permissible differential pressure across the valve's control path (when mixing), valid for the entire actuating range of the motorized valve.
Δp_{maxV}	Maximum differential pressure	kPa	Maximum permissible differential pressure across the valve's control path (when distributing), valid for the entire actuating range of the motorized valve.
Δp_{min}	Minimum differential pressure	kPa	Minimum differential pressure required, so that the differential pressure regulator works reliably with control valves (PICV). Δp_{min} depends on presetting position, see data sheet for details.
Δp_{V0}		kPa	Maximum differential pressure across the valve's closed control path.
Δp_{V100}	Differential pressure at nominal flow rate	kPa	Differential pressure across the fully open valve and the valve's control path by a volumetric flow $\dot{V}_{100}$.
Δp_s	Closing pressure	kPa	For 2-port valves, maximum permissible differential pressure at which the motorized valve will close securely against the pressure (close off pressure). Only valid for 2-port valves.
Δp_{MV}		kPa	Differential pressure across the variable flow path. Often Δp_{MV} is not known, in which case typical values can be used.
Δp_{VR}		kPa	Differential pressure between flow and return.
ΔT	Temperature spread	K	Temperature differential between flow and return.
DN	Nominal size		Characteristic for matching parts of the piping system.
H_0	Shutoff head	m	The head generated by a pump at closed value, at a given speed and a given pump medium.
H_{100}	Valve fully open		Stroke of fully open valve.
kPa	Pressure	kPa	100 kPa = 1 bar = 10 mWS.
mWC	Meter water column	m	
k_V	Nominal flow	m³/h	Amount of cold water (5...30 °C) passing through the valve at the respective stroke and at a differential pressure of 100 kPa (1 bar).
k_{VS}	Nominal flow rate	m³/h	Nominal flow rate of cold water (5...30 °C) through the fully open valve (H_{100}) at a differential pressure of 100 kPa (1 bar).
	Spring return function		Shutoff in the event of a power failure.
PN	PN class		Characteristic relating to the combination of mechanical and dimensional properties of a component in the piping system.
PS	PS class		Maximum allowable pressure.
P_V	Valve authority		Ratio of differential pressure across fully open valve (H_{100}) and differential pressure across valve and variable flow path. To ensure control, a minimum valve authority of 0.25 is required. PV ≥ 0.5 is recommended for good controllability.
Q_{100}	Rated capacity	kW	Plant's design capacity.
$\dot{V}_{100}$	Volumetric flow	m³/h	Volumetric flow with valve fully open (H_{100}).
$\dot{V}_{min}$	Minimum volumetric flow	m³/h	Smallest presettable volumetric flow through the fully open combi valve (H_{100}).
c	Specific heat capacity	kJ/kgK	
ρ	Specific density	kg/m³	

8

Valve sizing and actuator selection

Basic hydronic circuit						
1 **Determine the type of hydronic circuit**	Throttling circuit	Injection circuit with 2-port valve	Mixing circuit	Mixing circuit with fixed premixing	Diverting circuit	Injection circuit with 3-port valve
— For valve sizing relevant variable flow path	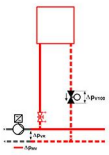	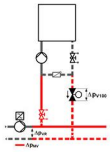	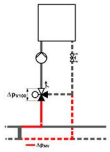	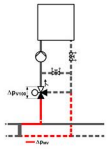	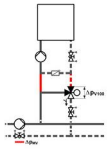	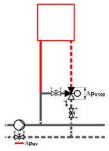

HVAC plants and consumers						
Heating						
Surface/floor heating	–	■	–	■	–	outdated
Heating plant (primary)	–	■	■	■	outdated	outdated
Zone control, heating	–	■	–	–	–	outdated
Heating groups	–	■	■	■	–	–
Generation of heat energy	–	–	■	■	–	–
Heat exchanger water-water	■	uncommon	–	–	uncommon	uncommon
Ventilation and air conditioning plants						
Air handling unit	■	■	■	–	outdated	outdated
Fan coil unit	■	–	–	–	outdated	outdated
Cooling coil	dehumidifying	■	–	–	uncommon	uncommon
Reheating coil	■	■	uncommon	uncommon	outdated	outdated
Preheating coil	–	■	uncommon	uncommon	–	outdated
VAV	■	–	–	–	outdated	outdated
Zone control	■	–	–	–	outdated	outdated
Chiller plants						
Surface/floor cooling	–	■	–	–	–	outdated
Generation of cooling energy	–	–	■	■	–	–
Cooling towers	■	–	–	–	outdated	uncommon
Zone control, cooling	–	■	–	–	–	outdated
District heating and cooling						
District heating, primary	■	uncommon	uncommon	uncommon	–	–
District heating, secondary	■	■	uncommon	uncommon	–	–
District cooling, primary	■	uncommon	uncommon	uncommon	–	–
District cooling, secondary	■	■	uncommon	uncommon	–	–
Hot water						
Hot water directly	–	■	■	–	–	–

8

Header

Differential pressure header	pressurized	pressureless	pressurized
Volumetric flow	variable		constant

Valve sizing and selection: k_{vs} valves and actuators

1	**Determine the type of hydronic circuit**	Throttling circuit	Injection circuit with 2-port valve	Mixing circuit	Mixing circuit with fixed pre-mixing	Diverting circuit	Injection circuit with 3-port valve
—	For valve sizing relevant variable flow path	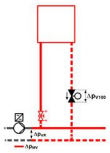	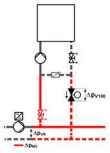	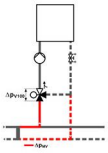	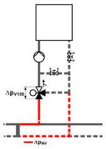	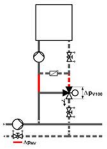	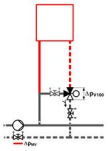
Determine volumetric flow $\dot{V}$							
2	**Δp_{VR} or Δp_{MV}** typical range typical value	10...200 kPa Use effective Δp_{VR} value	Δp_{VR} 10...200 kPa	5...15 kPa 8 kPa	5...15 kPa 8 kPa	10...50 kPa eff. value Δp_{MV}	2...5 kPa 3 kPa
3	**Determine Δp_{V100}**	$\Delta p_{V100} \geq \frac{\Delta p_{VR}}{2}$ $(P_V \geq 0.5)$		$\Delta p_{V100} \geq \Delta p_{MV}$ $(P_V \geq 0{,}5)$			
4	**Calculate $\dot{V}_{100}$**	Water without anti-freeze $\dot{V}_{100} = \frac{\dot{Q}_{100}}{1.163 \cdot \Delta T}$		Water with anti-freeze $\dot{V}_{100} = \frac{\dot{Q}_{100} \cdot 3600}{c \cdot \rho \cdot \Delta T}$			
5	**Determine k_{vs} value**	$k_V = \frac{\dot{V}_{100}}{\sqrt{\frac{\Delta p_{V100}}{100\,kPa}}}$ => $k_{VS} \geq 0.85 \cdot k_V$ value					
6	**Check resulting Δp_{V100}**	$\Delta p_{V100} = 100 \cdot \left(\frac{\dot{V}_{100}}{k_{VS}}\right)^2$					
Selection of valve and actuator							
7	**Select suitable valve series**	1. Type of valve (2-port, 3-port, 3-port with bypass) 2. Connections (flanged, threaded, soldered)		3. PN class 4. Nominal size DN		5. Max. / min. medium temperature 6. Medium	
8	**Check valve authority P_v**	$P_V = \frac{\Delta p_{V100}}{\Delta p_{VR}} \geq 0.25...0.8$		$P_V = \frac{\Delta p_{V100}}{\Delta p_{V100} + \Delta p_{MV}} \geq 0.25...0.8$			
9	**Select actuator**	1. Operating voltage 2. Positioning signal 3. Positioning time 4. Spring return function 5. Auxiliary functions					
10	**Check working range**	1. Differential pressure $\Delta p_{max} > \Delta p_{V0}$ 2. Closing pressure $\Delta p_s > H_0$					
11	**Selection**	Valve and suitable actuator					

Valve sizing and selection: Intelligent Valves, PICVs and actuators

1	**Determine the type of hydronic circuit**	Throttle circuit or injection system with 2-port valve 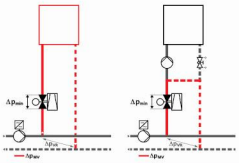		
Determine volumetric flow $\dot{V}$				
2	**Determine $\dot{Q}_{100}$**	$\dot{Q}_{100}$		
3	**Determine ΔT**	ΔT		
4	**Calculate $\dot{V}$**	Water without anti-freeze $\dot{V}_{100} = \frac{\dot{Q}_{100}}{1.163 \cdot \Delta T}$	Water with anti-freeze $\dot{V}_{100} = \frac{\dot{Q}_{100} \cdot 3600}{c \cdot \rho \cdot \Delta T}$	
Select valve and actuator				
5	**Select suitable valve**	1. Type of valve (with/without P/T plugs) 4. Connection (flanged, threaded)	2. PN class 5. Nominal size DN	3. Max. / min. medium temperature 6. Medium
6	**Determine presetting**	Determine presetting using the volumetric flow/dial table in data sheet of the respective PICV		
7	**Select actuator for PICV**	1. Operating voltage 2. Positioning signal 3. Positioning time 4. Auxiliary functions		
8	**Check working range**	1. $\Delta p < \Delta p_{max}$ – maximum permissible differential pressure across the valve's control path, valid for the entire actuating range of the motorized valve 2. $\Delta p > \Delta p_{min}$ – minimum differential pressure required across the valve's control path, so that the differential pressure regulator works reliably		

Or just use the Acvatix slide ruler, the online tool for simple valve sizing, to find the right valve with actuator.

Or just install the Combi Valve (PICV) Sizer on your smartphone to find the right PICV with actuator.

8

Air handling unit with cooling coil (cooling/de-humidification) and reheating coil, with PICVs

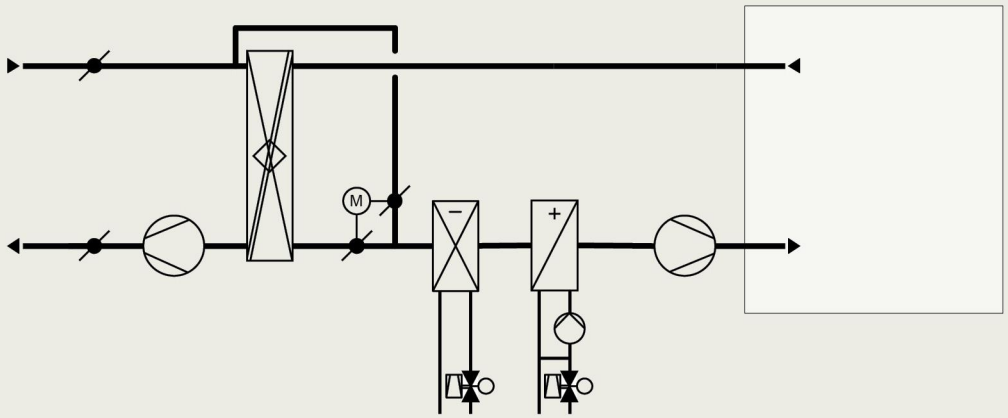

Plant data	Cooling coil	Heating coil
Cooling/heating power $\dot{Q}_{100}$	75 kW	65 kW
Supply temperature producer $\theta_{Producer}$	6 °C	55 °C
Temperatures Supply/Return θ_{Supply} / θ_{Return}	6/12 °C	50/35 °C
Temperature difference	6 K	20 K
Medium	Water	Water
Differential pressure Δp_{MV} without balancing valve	57 kPa	12 kPa
Shutoff head pump H_0 (resp. Δp_{V0})	18 mWC (180 kPa)	18 mWC (180 kPa)
Positioning signal	0...10 V	0...10 V

	Cooling coil	Reheating coil
1 Determine Volumetric flow $\dot{V}_{100}$		
$\dot{V}_{100} = \frac{\dot{Q}_{100}}{1.163 \cdot \Delta T}$ decisive temperature difference Constant 1.163: with density ρ = 1000 kg/m³, 3600 s/h and specific heat capacity c = 4.187 kJ/(kg·K)	$\dot{V}_{100} = \frac{75\ kW}{1.163 \cdot 6\ K} = 10.75\ m^3/h$ $\theta_{Return\ cooling\ coil} - \theta_{Producer} = (12 - 6)\ °C = 6\ K$	$\dot{V}_{100} = \frac{65\ kW}{1.163 \cdot 20\ K} = 2.79\ m^3/h$ $\theta_{Producer} - \theta_{Return\ heating\ coil} = (55 - 35)\ °C = 20\ K$
Hydronic circuit Δp_{MV} Differential pressure across variable flow path	Throttling circuit 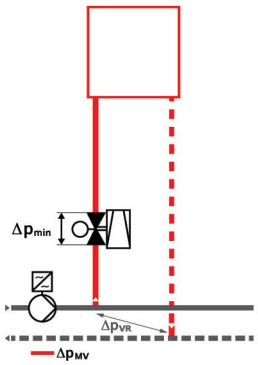	Injection circuit with 2-port valve 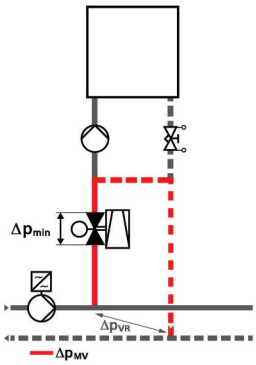
Distribution setup	Pressurized with variable volumetric flow (primary pump controlled)	

	Cooling coil	Reheating coil
2 Determine minimally required differential pressure Δp_{min} (from data sheet)		

Cooling coil VPF44.50F15

VPF44.50F15 — **15 m³/h nominal**

V̇ [m³/h]				3.7	4.2	4.9	5.6	6.3	7.0	7.7	8.4	9.2	10.0	11.0	11.9	12.6	13.2	13.5	13.8	14.1	**14.3**
Dial	Min.	0.2	0.4	0.6	0.8	1	1.2	1.4	1.6	1.8	2	2.2	2.4	2.6	2.8	3	3.2	3.4	3.6	3.8	**Max**
Δp_{min} [kPa]				13	14	15	16	16	17	18	18	19	20	21	21	22	23	23	24	25	**25**

Reheating coil VPP46.32F4Q

VPP46.32F4, VPP46.32F4Q, VPI46.32F4, VPI46.32F4Q — **4000 l/h nominal**

V̇ [l/h]					550	800	910	1110	1320	1520	1720	1930	2130	2330	2530	2740	2940	3140	3350	3550	3750	4001
Dial	Min.	0.2	0.4	0.5	0.6	0.8	1	1.2	1.4	1.6	1.8	2	2.2	2.4	2.6	2.8	3	3.2	3.4	3.6	3.8	Max.
Δp_{min} [kPa]					17.9	18	18.1	18.2	18.3	18.5	18.7	18.9	19.2	19.6	20.1	20.7	21.4	22.3	23.4	24.6	26	28

	Cooling coil	Reheating coil
Δp_{min}	Δp_{min} = 21 kPa	Δp_{min} = 21 kPa
Presetting	Dial = 2.55	Dial = 2.85
Total resistance Δp_{VR} for primary pump	$\Delta p_{VR} = \Delta p_{MV} + \Delta p_{min}$ = 57 kPa + 21 kPa Δp_{VR} = 78 kPa (7.8 mWC)	$\Delta p_{VR} = \Delta p_{MV} + \Delta p_{min}$ = 12 kPa + 21 kPa Δp_{VR} = 33 kPa (3.3 mWC)
3 Select suitable valve type		
Type of valve	PICV (with linear characteristic)	PICV (with linear characteristic)
Connection type	Flange	External thread
Nominal pressure level PN	PN 16	PN 16
Selected valve	VPF44.50F15 (with measuring points)/piping size DN 50	VPP46.32F4Q (with measuring points)/piping size DN 32
4 Select valve actuator		
Actuator type	SAX.. with 20 mm stroke	SSA.. with 5.5 mm stroke
Operating voltage	AC 24 V	AC 24 V
Positioning signal	0...10 V	0...10 V
Positioning time	30 s	55 s
Spring return function	no	no
Additional functions	none	none
Selected actuator	SAX61P03, with selectable characteristic ➞ equal percentage *fits well to cooling coil transfer characteristic*	SSA161E.05HF ➞ with equal percentage characteristic *fits well to reheating coil transfer characteristic*
Selection		
PICV	VPF44.50F15 (with measuring points)	VPP46.32F4Q (with measuring points)
Valve actuator	SAX61P03	SSA161E.05HF

8

Heating plant with low-pressure distribution, with k_{VS}-valves (3-port)

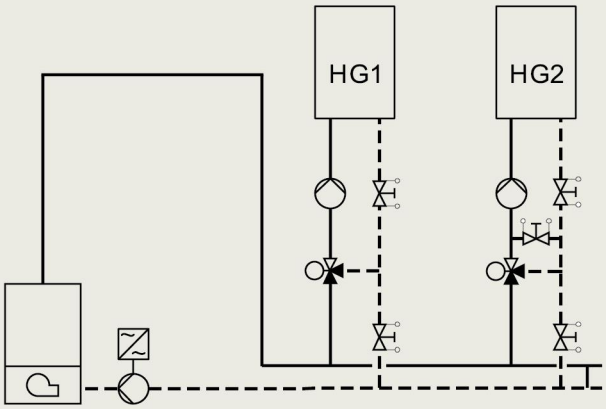

Plant data	Heating group 1	Heating group 2
Heating group power $\dot{Q}_{100}$	55 kW	60 kW
Supply temperature producer $\theta_{Producer}$	55 °C	55 °C
Temperatures Supply/Return θ_{Supply} / θ_{Return}	55/45 °C	35/28 °C
Temperature spread	see below	see below
Medium	Water	Water
Differential pressure Δp_{MV}	see below	see below
Shutoff head pump H_0 (resp. Δp_{V0})	4.5 mWC (45 kPa)	4.5 mWC (45 kPa)
Positioning signal	3-position	3-position

	Heating group 1	Heating group 2
1 Determine Volumetric flow $\dot{V}_{100}$		
$\dot{V}_{100} = \frac{\dot{Q}_{100}}{1.163 \cdot \Delta T}$ decisive temperature difference Constant 1.163: with density ρ = 1000 kg/m³, 3600 s/h and specific heat capacity c = 4.187 kJ/(kg·K)	$\dot{V}_{100} = \frac{55\ kW}{1.163 \cdot 10\ K} = 4.73\ m^3/h$ $\theta_{Supply\ HG\ 1} - \theta_{Return\ HG\ 1} = (55 - 45)\ °C = 10\ K$	$\dot{V}_{100} = \frac{60\ kW}{1.163 \cdot 27\ K} = 1.91\ m^3/h$ $\theta_{Producer} - \theta_{Return\ HG\ 2} = (55 - 28)\ °C = 27\ K$
2 Determine Differential pressure Δp_{v100}		
Hydronic circuit Δp_{MV} Differential pressure across variable flow path	Mixing circuit with pump 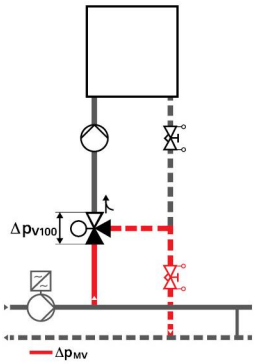 	Mixing circuit with fixed pre-mixing with pump 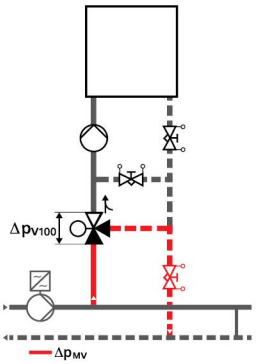
Distribution setup	low pressure	
Δp_{MV} typical range	2...5 kPa	
typical value	3 kPa	
Δp_{V100}	$\Delta p_{V100} \geq \Delta p_{MV}$ (resp. $P_V \geq 0.5$)	
Desired differential pressure	$\Delta p_{V100} \geq 3$ kPa	

8

	Heating group 1	Heating group 2
3 Determine desired flow k_V		
$k_V = \frac{\dot{V}_{100}}{\sqrt{\frac{\Delta p_{V100}}{100\ \text{kPa}}}}$	$k_V = \frac{4.73\ \text{m}^3/\text{h}}{\sqrt{\frac{3\ \text{kPa}}{100\ \text{kPa}}}} = 27.3\ \text{m}^3/\text{h}$	$k_V = \frac{1.91\ \text{m}^3/\text{h}}{\sqrt{\frac{3\ \text{kPa}}{100\ \text{kPa}}}} = 11.0\ \text{m}^3/\text{h}$
4 Select valve nominal flow rate k_{VS} and determine resulting differential pressure $\Delta p_{V100\ res}$		
$k_{VS} \geq 0.85 \cdot k_V$-value	$k_{VS} \geq 0.85 \cdot 27.3\ \text{m}^3/\text{h} = 23.2\ \text{m}^3/\text{h}$ selected: $k_{VS} = 25\ \text{m}^3/\text{h}$	$k_{VS} \geq 0.85 \cdot 11.0\ \text{m}^3/\text{h} = 9.4\ \text{m}^3/\text{h}$ selected: $k_{VS} = 10\ \text{m}^3/\text{h}$
resulting $\Delta p_{V100\ res}$ $\Delta p_{V100\ res} = 100\ \text{kPa} \cdot \left(\frac{\dot{V}_{100}}{k_{VS}}\right)^2$	$\Delta p_{V100\ res} = 100\ \text{kPa} \cdot \left(\frac{4.73\ \text{m}^3/\text{h}}{25\ \text{m}^3/\text{h}}\right)^2$ $\Delta p_{V100\ res} = 3.6\ \text{kPa}$	$\Delta p_{V100\ res} = 100\ \text{kPa} \cdot \left(\frac{1.91\ \text{m}^3/\text{h}}{10\ \text{m}^3/\text{h}}\right)^2$ $\Delta p_{V100\ res} = 3.6\ \text{kPa}$
5 Check valve authority P_V (control stability)		
$P_V = \frac{\Delta p_{V100\ res}}{\Delta p_{V100\ res} + \Delta p_{MV}}$ and $0.3 < P_V < 0.6$	$P_V = \frac{3.6\ \text{kPa}}{3.6\ \text{kPa} + 3\ \text{kPa}}$ $P_V = 0.55$	$P_V = \frac{3.6\ \text{kPa}}{3.6\ \text{kPa} + 3\ \text{kPa}}$ $P_V = 0.55$
6 Select suitable valve type		
Type of valve	3-port valve	3-port valve
Connection type	External thread	External thread
Nominal pressure level PN	PN 16	PN 16
Possible valve type(s)	VXG44.., VXG41..	VXG44.., VXG41..
Selected valve	VXG44.40-25 with $k_{VS} = 25\ \text{m}^3/\text{h}$ piping size DN 40 with linear characteristic	VXG44.25-10 with $k_{VS} = 10\ \text{m}^3/\text{h}$ piping size DN 25 with linear characteristic
7 Check valve working range		
Medium	VXG44 suitable for water	VXG44 suitable for water
Medium temperature	40 °C > 1 °C min. medium temperature 50 °C < 120 °C max. medium temperature	28 °C > 1 °C min. medium temperature 35 °C < 120 °C max. medium temperature
8 Select actuator		
Actuator type	SAS.. with 5.5 mm stroke	
Operating voltage	AC 230 V	
Positioning signal	3-point (open – 0 – close)	
Positioning time	30...120 s	
Spring return function	No	
Additional functions	Auxiliary switches, potentiometer, feedback signal available or included	
Selected actuator	SAS31.00	SAS31.00
9 Check actuator working range		
Differential pressure $\Delta p_{max} \geq \Delta p_{V0}$ (H_0)	$\Delta p_{max} = 125\ \text{kPa} \geq 45\ \text{kPa}$	$\Delta p_{max} = 400\ \text{kPa} \geq 45\ \text{kPa}$
Closing pressure $\Delta p_S \geq \Delta p_{V0}$ (H_0)	Not with 3-port valves	
Selected actuator	SAS31.00 positioning time 120 s, no spring return function, no additional functions, AC 230 V	
Selection		
Valve	VXG44.40-25 with $k_{VS} = 25\ \text{m}^3/\text{h}$	VXG44.25-10 with $k_{VS} = 10\ \text{m}^3/\text{h}$
Actuator	SAS31.00	SAS31.00

Actuators for globe and pressure independent control valves (PICV)
Thermostatic head

RTN..

Thermostatic actuators

Thermostatic actuators for controlling the room temperature. Setpoint adjustment with knob. Versions with shutoff and frost protection position.
Limit stops for minimum and maximum values or setpoint locking.
Mounts directly on Siemens radiator valves VDN../VEN../VUN../VPD../VPE..

Adapter for third-party valves, see overview AV..
The radiator valves can be closed with the thermostatic actuators RTN51.. and RTN71..

Data sheet	N2111
Warranty	60 Months

Range overview RTN..

Product Title	Design	Setpoint setting range [°C]	Surface treatment	Stock no.	Product no.
Thermostatic actuator, RAL 9016, matt	Frost protection position Closing position	12...28	RAL 9016, matt	BPZ:RTN51	**RTN51**
Thermostatic actuator, RAL 9016, glossy	Frost protection position Closing position	12...28	RAL 9016, glossy	BPZ:RTN51G	**RTN51G**
Thermostatic actuator with remote sensor	Remote sensor Frost protection position Closing position	12...28	RAL 9016, matt	BPZ:RTN71	**RTN71**
Thermostatic actuator with remote adjuster	Remote sensor Frost protection position	8...28	RAL 9016, matt	BPZ:RTN81	**RTN81**

Electrothermal actuators with/ without connecting cable for radiator, small, and zone valves

STA..3

Electrothermal actuators, stem opened in a deenergized state, with or without connection cable for:
- Radiator valves VDN.., VEN.., VUN..
- MCV MiniCombiValves VPD.., VPE..
- Small valves VD1..CLC..
- Zone valves V..I46..
- Combi valves VPP46.., VPI46..
- Valves of other manufacturers

Actuators without connecting cable can be equipped with:
- Connecting cable up to 15 m, halogen-free up to 10 m
- Connecting cable with LED operation indicator
- Connecting cable with auxiliary switch or DC 0...10 V module

The given positioning time refers to the maximum stroke of 4.5 mm.

Data sheet	N4884
Stroke	4.5 mm
Degree of protection	IP54
Mounting position	Any, 360°
Power consumption	2.5 W
Warranty	60 Months

Range overview STA..3

Operating voltage [V]	Positioning time [s]	Positioning signal	Cable length [m]	Stock no.	Product no.
AC 230	210	2-position	1	S55174-A101	**STA23**
AC 24	270	DC 0...10 V	2	S55174-A104	**STA63**
AC 24 DC 24	270	2-position PDM	1	S55174-A100	**STA73**
AC 24 DC 24	270	2-position PDM		S55174-A109	**STA73/00**

The given positioning time is related to the maximum stoke of 4.5 mm.
/00 = without cable
xxB = color black
xxMP = multi pack 50 pce

8

Actuators for globe and pressure independent control valves (PICV) Electrothermal

STA..

Electrothermal actuators with connecting cable for radiator, small, and zone valves

Electrothermal actuators, NC in a deenergized state, with connection cable for:
- Radiator valves VUN..
- Radiator valves VPD.., VPE.., VPU...
- Small valves VD1..CLC..
- Zone valves V..I46..
- Combi valves VPP46.., VPI46.., VQP46..
- VVP47..., VXP47..
- Valves of other manufacturers

Actuators are equipped with connection cables
- 1m / 2m / 2m Halogenfree / 5m

The given positioning time refers to the maximum stroke of 4.5 mm.

Data sheet	A6V12968650
Force	110 N
Stroke	4.5 mm
Degree of protection	IP54
Dimensions (W x H x D)	41 x 68 x 39 mm
Warranty	60 Months

Range overview STA..21..

Operating voltage [V]	Positioning time [s]	Cable length [m]	Stock no.	Product no.
AC/DC 24	270	1	S55174-A177	**STA121**
AC/DC 24	270	2	S55174-A181	**STA121.L20**
AC/DC 24	270	2	S55174-A195	**STA121.L20H**
AC/DC 24	270	5	S55174-A185	**STA121.L50**
AC 230	210	1	S55174-A178	**STA321**
AC 230	210	2	S55174-A182	**STA321.L20**
AC 230	210	2	S55174-A196	**STA321.L20H**
AC 230	210	5	S55174-A186	**STA321.L50**

Accessories for STA..21..

Product Title	Data sheet	Stock no.	Product no.
Closing dimension adapter plate for Thermal Actuators STA/STP	A6V12986007	S55174-A199	**ADA10**
Retrofit adapter for installed 2W..., 3W..., 4W... valves	N4878	BPZ:AL100	**AL100**
Higher sliding sleeve adapter (bayonet), 5 mm	N2100	S55174-A171	**AV306**
Theft protection	N4884	S55174-A168	**AL431**

Electrothermal actuators with connecting cable for radiator, small, and zone valves

STP..

Electrothermal actuators, NO in a deenergized state, with connection cable for:
- Radiator valves VUN..
- Radiator valves VPD.., VPE.., VPU...
- Small valves VD1..CLC..
- Zone valves V..I46..
- Combi valves VPP46.., VPI46.., VQP46..
- VVP47..., VXP47..
- Valves of other manufacturers

Actuators are equipped with connection cables
- 1m / 2m / 2m Halogenfree / 5m

The given positioning time refers to the maximum stroke of 4.5 mm.

Data sheet	A6V12968650
Force	110 N
Stroke	4.5 mm
Degree of protection	IP54
Dimensions (W x H x D)	41 x 72 x 39 mm
Warranty	60 Months

Range overview STP..21..

Operating voltage [V]	Positioning time [s]	Cable length [m]	Stock no.	Product no.
AC/DC 24	270	1	S55174-A179	**STP121**
AC/DC 24	270	2	S55174-A183	**STP121.L20**
AC/DC 24	270	5	S55174-A187	**STP121.L50**
AC 230	210	1	S55174-A180	**STP321**
AC 230	210	2	S55174-A184	**STP321.L20**
AC 230	210	5	S55174-A188	**STP321.L50**

Accessories for STP..21..

Product Title	Data sheet	Stock no.	Product no.
Closing dimension adapter plate for Thermal Actuators STA/STP	A6V12986007	S55174-A199	**ADA10**
Retrofit adapter for installed 2W..., 3W..., 4W... valves	N4878	BPZ:AL100	**AL100**
Higher sliding sleeve adapter (bayonet), 5 mm	N2100	S55174-A171	**AV306**
Theft protection	N4884	S55174-A168	**AL431**

Accessories for STA..40

Product Title	Data sheet	Stock no.	Product no.
Third-party valve adapter on Beulco valve		S55845-Z304	**ASA04H**
Third-party valve adapter on Strawa valve		S55845-Z305	**ASA10**
Third-party valve adapter on Giacomini valve		S55845-Z299	**ASA26**
Third-party valve adapter on Danfoss RAV/L valve		S55845-Z300	**ASA59**
Third-party valve adapter on Danfoss RAV valve		S55845-Z301	**ASA72**
Third-party valve adapter on Danfoss RA valve		S55845-Z302	**ASA78**
Valve adapter for M30x1.5 valve		S55845-Z303	**ASA80**

Actuators for globe and pressure independent control valves (PICV) Electrothermal

STA..40..

for radiator valves and floor heating

Electrothermal actuators, stem extended in a deenergized state (NC) for 2-position and quasi-proportional control of heating systems, chilled ceilings and terminal units. With position indication and connecting cable.

Suited for:
- Radiator valves VDN../VEN../VUN../VPD../VPE..
- Floor heating
- Valves of other manufacturers

For fitting to valve: Cap nut M30 x 1.5

Data sheet	A6V14028280
Force	100 N
Stroke	4.0 mm
Degree of protection	IP54
Dimensions (W x H x D)	48.8 x 44.3 x 57.3 mm
Power consumption	1 W

Range overview STA..40..

Operating voltage [V]	Positioning time [s]	Cable length [m]	Stock no.	Product no.
AC/DC 24	210	1	S55174-A219	STA121.40L10
AC/DC 24	210	1	S55174-A225	STA126.40L10
AC 24	210	1	S55174-A222	STA161.40L10
AC 230	210	1	S55174-A218	STA321.40L10
AC 230	210	1	S55174-A224	STA326.40L10

Accessories for STP..40

Product Title	Data sheet	Stock no.	Product no.
Third-party valve adapter on Beulco valve		S55845-Z304	ASA04H
Third-party valve adapter on Strawa valve		S55845-Z305	ASA10
Third-party valve adapter on Giacomini valve		S55845-Z299	ASA26
Third-party valve adapter on Danfoss RAV/L valve		S55845-Z300	ASA59
Third-party valve adapter on Danfoss RAV valve		S55845-Z301	ASA72
Third-party valve adapter on Danfoss RA valve		S55845-Z302	ASA78
Valve adapter for M30x1.5 valve		S55845-Z303	ASA80

STP..40..

for radiator valves and floor heating

Electrothermal actuators, stem retracted in a deenergized state (NO) for 2-position and quasi-proportional control of heating systems, chilled ceilings and terminal units. With position indication and connecting cable.

Suited for:
- Radiator valves VDN../VEN../VUN../VPD../VPE..
- Floor heating
- Valves of other manufacturers

For fitting to valve: Cap nut M30 x 1.5

Force	100 N
Stroke	4.0 mm
Degree of protection	IP54
Dimensions (W x H x D)	48.8 x 44.3 x 57.3 mm
Power consumption	1 W

Range overview STP..40..

Operating voltage [V]	Positioning time [s]	Cable length [m]	Stock no.	Product no.
AC/DC 24	210	1	S55174-A221	STP121.40L10
AC 24	210	1	S55174-A223	STP161.40L10
AC 230	210	1	S55174-A220	STP321.40L10

Accessories for STA..125

Product Title	Data sheet	Stock no.	Product no.
Third-party valve adapter on Beulco valve		S55845-Z304	ASA04H
Third-party valve adapter on Strawa valve		S55845-Z305	ASA10
Third-party valve adapter on Giacomini valve		S55845-Z299	ASA26
Third-party valve adapter on Danfoss RAV/L valve		S55845-Z300	ASA59
Third-party valve adapter on Danfoss RAV valve		S55845-Z301	ASA72
Third-party valve adapter on Danfoss RA valve		S55845-Z302	ASA78
Valve adapter for M30x1.5 valve		S55845-Z303	ASA80

Connection cable for STA..125

Product Title	Data sheet	Stock no.	Product no.
Connecting cable, On/Off, PVC, 1 m		S55845-Z278	ASY21L10
Connecting cable, On/Off, PVC, 10 m		S55845-Z281	ASY21L100
Connecting cable, On/Off, HF, 10 m		S55845-Z284	ASY21L100H
Connecting cable, On/Off, HF, 1 m		S55845-Z282	ASY21L10H
Connecting cable, On/Off, PVC, 2 m		S55845-Z279	ASY21L20
Connecting cable, On/Off, PVC, 5 m		S55845-Z280	ASY21L50
Connecting cable, On/Off, HF, 5 m		S55845-Z283	ASY21L50H
Connecting cable, 0...10 V, PVC, no feedback, 1 m		S55845-Z285	ASY61L10
Connecting cable, 0...10 V, PVC, no feedback, 10 m		S55845-Z288	ASY61L100
Connecting cable, 0...10 V, HF, no feedback, 10 m		S55845-Z291	ASY61L100H
Connecting cable, 0...10 V, HF, no feedback, 1 m		S55845-Z289	ASY61L10H
Connecting cable, 0...10 V, PVC, no feedback, 2 m		S55845-Z286	ASY61L20
Connecting cable, 0...10 V, PVC, no feedback, 5 m		S55845-Z287	ASY61L50
Connecting cable, 0...10 V, HF, no feedback, 5 m		S55845-Z290	ASY61L50H
Connecting cable, 0...10 V, PVC, with feedback, 1 m		S55845-Z292	ASY62L10
Connecting cable, 0...10 V, PVC, with feedback, 10 m		S55845-Z295	ASY62L100

New Product

Connection cable for STA..125

Product Title	Data sheet	Stock no.	Product no.
Connecting cable, 0...10 V, HF, with feedback, 10 m		S55845-Z298	ASY62L100H
Connecting cable, 0...10 V, HF, with feedback, 1 m		S55845-Z296	ASY62L10H
Connecting cable, 0...10 V, PVC, with feedback, 2 m		S55845-Z293	ASY62L20
Connecting cable, 0...10 V, PVC, with feedback, 5 m		S55845-Z294	ASY62L50
Connecting cable, 0...10 V, HF, with feedback, 5 m		S55845-Z297	ASY62L50H

STA..65..

for radiator valves, small valves and Combi valves

Electrothermal actuators, stem extended in a deenergized state (NC) for 2-position and quasi-proportional control of heating systems, chilled ceilings and terminal units. With position indication.

Suited for valves:
- Radiator valves VDN../VEN../VUN../VPD../VPE..
- Small valves VD1..CLC and V..I46..
- Combi valves VPP46.., VPI46..
- Valves of other manufacturers

For fitting to valve: Cap nut M30 x 1.5

Data sheet	A6V14028280
Force	125 N
Stroke	6.5 mm
Degree of protection	IP54
Power consumption	1.2 W

Range overview AVG4E..

Operating voltage [V]	Positioning time [s]	Cable length [m]	Stock no.	Product no.
AC/DC 24	270		S55174-A211	STA121.65/00
AC/DC 24	270	2	S55174-A208	STA121.65H20
AC/DC 24	270	1	S55174-A201	STA121.65L10
AC/DC 24	270	2	S55174-A205	STA121.65L20
AC 24	270	1	S55174-A214	STA161.65L10
AC/DC 24	270	1	S55174-A216	STA162.65L10
AC 230	270		S55174-A210	STA321.65/00
AC 230	270	2	S55174-A209	STA321.65H20
AC 230	270	1	S55174-A200	STA321.65L10
AC 230	270	2	S55174-A204	STA321.65L20

Accessories for STP..125

Product Title	Data sheet	Stock no.	Product no.
Third-party valve adapter on Beulco valve		S55845-Z304	ASA04H
Third-party valve adapter on Strawa valve		S55845-Z305	ASA10
Third-party valve adapter on Giacomini valve		S55845-Z299	ASA26
Third-party valve adapter on Danfoss RAV/L valve		S55845-Z300	ASA59
Third-party valve adapter on Danfoss RAV valve		S55845-Z301	ASA72
Third-party valve adapter on Danfoss RA valve		S55845-Z302	ASA78
Valve adapter for M30x1.5 valve		S55845-Z303	ASA80

Connection cable for STP..125

Product Title	Data sheet	Stock no.	Product no.
Connecting cable, On/Off, PVC, 1 m		S55845-Z278	ASY21L10
Connecting cable, On/Off, PVC, 10 m		S55845-Z281	ASY21L100
Connecting cable, On/Off, HF, 10 m		S55845-Z284	ASY21L100H
Connecting cable, On/Off, HF, 1 m		S55845-Z282	ASY21L10H
Connecting cable, On/Off, PVC, 2 m		S55845-Z279	ASY21L20
Connecting cable, On/Off, PVC, 5 m		S55845-Z280	ASY21L50
Connecting cable, On/Off, HF, 5 m		S55845-Z283	ASY21L50H
Connecting cable, 0...10 V, PVC, no feedback, 1 m		S55845-Z285	ASY61L10
Connecting cable, 0...10 V, PVC, no feedback, 10 m		S55845-Z288	ASY61L100
Connecting cable, 0...10 V, HF, no feedback, 10 m		S55845-Z291	ASY61L100H
Connecting cable, 0...10 V, HF, no feedback, 1 m		S55845-Z289	ASY61L10H
Connecting cable, 0...10 V, PVC, no feedback, 2 m		S55845-Z286	ASY61L20
Connecting cable, 0...10 V, PVC, no feedback, 5 m		S55845-Z287	ASY61L50
Connecting cable, 0...10 V, HF, no feedback, 5 m		S55845-Z290	ASY61L50H
Connecting cable, 0...10 V, PVC, with feedback, 1 m		S55845-Z292	ASY62L10
Connecting cable, 0...10 V, PVC, with feedback, 10 m		S55845-Z295	ASY62L100
Connecting cable, 0...10 V, HF, with feedback, 10 m		S55845-Z298	ASY62L100H
Connecting cable, 0...10 V, HF, with feedback, 1 m		S55845-Z296	ASY62L10H
Connecting cable, 0...10 V, PVC, with feedback, 2 m		S55845-Z293	ASY62L20
Connecting cable, 0...10 V, PVC, with feedback, 5 m		S55845-Z294	ASY62L50
Connecting cable, 0...10 V, HF, with feedback, 5 m		S55845-Z297	ASY62L50H

STP..65..

for small valves

Electrothermal actuators, stem retracted in a deenergized state (NO) for 2-position and quasi-proportional control of heating systems, chilled ceilings and terminal units. With position indication.

Suited for valves:
- Small valves VVP47.., VXP47.., VMP47..
- Valves of other manufacturers

For fitting to valve: Cap nut M30 x 1.5

Force	125 N
Stroke	6.5 mm
Degree of protection	IP54
Power consumption	1.2 W

Range overview STP..65..

Operating voltage [V]	Positioning time [s]	Cable length [m]	Stock no.	Product no.
AC/DC 24	270		S55174-A213	STP121.65/00
AC/DC 24	270	1	S55174-A203	STP121.65L10
AC/DC 24	270	2	S55174-A207	STP121.65L20
AC 24	270	1	S55174-A215	STP161.65L10
AC 230	270	1	S55174-A217	STP162.65L10
AC 230	270		S55174-A212	STP321.65/00
AC 230	270	1	S55174-A202	STP321.65L10
AC 230	270	2	S55174-A206	STP321.65L20

Actuators for globe and pressure independent control valves (PICV) Electromotoric

SSA..

Electromotoric actuators 100 N for valves with 1.2...6.5 mm stroke

For pressure independent combi valves (PICV), radiator valves, MiniCombi valves (MCV) and small globe valves.
Electromotoric actuators for modulating control in radiator, chilled ceiling, VAV and fan coil unit applications. With automatic stroke adaption, force-dependent switching off in the end position, LED position indication, feedback signal, and manual operation. Suited for use with Siemens PICV VPP46../VPI46.., Siemens radiator valves VDN../VEN../VUN.., Siemens MiniCombi valves VPD../VPE.., Siemens small valves VD1..CLC and on radiator valves with M30 x 1.5 connection without adapter (Heimeier, Cazzaniga, Oventrop M30x1.5, Honeywell-Braukmann, MNG, Junkers, Beulco new). Further valves of other manufacturers on request.

For fitting to the valve: Cap nut M30 x 1.5
1.2 mm minimal stroke required for self calibration

Data sheet	CE1N4893, A6V11858278, A6V11858276
Stroke	1.2 mm 6.5 mm
Positioning force	100 N
Degree of protection	IP54
Medium temperature	1...110 °C
Mounting position	360°
Warranty	60 Months

Range overview SSA..

Operating voltage [V]	Positioning signal	Power consumption [VA]	Auxiliary switch	Cable length [m]	Stock no.	Product no.
AC 230	3-position	6	1	1.5	BPZ:SSA31.1	**SSA31.1**
AC 24	3-position	0.8	1	1.5	BPZ:SSA81.1	**SSA81.1**
AC 24	3-position	0.8	0	1.5	S55180-A106	**SSA131.00**
AC 24 DC 24	4...20 mA	2.5	0	1.5	S55180-A110	**SSA151.05HF**
AC 24 DC 24	DC 0...10 V	2.5	0	1.5	S55180-A107	**SSA161.05**
AC 24 DC 24	DC 0...10 V	2.5	0	1.5	S55180-A108	**SSA161.05HF**
AC 24 DC 24	DC 0...10 V	2.5	0	1.5	S55180-A109	**SSA161E.05HF**
AC 230	3-position	7	0	1.5	S55180-A105	**SSA331.00**

Positioning time for 2.5 mm stroke.

Connected Home wireless room actuator, ZigBee

SSA911.02ZB

Battery-powered radiator valve actuator

- Communication with Siemens Connected Home
- ZigBee wireless protocol
- Display with user interface
- Integrated temperature sensor
- Local temperature control algorithm
- 2x AA alkaline batteries
- M30 x 1.5 valve connection

Data sheet	A6V12789814
Positioning force	90 N
Stroke	5 mm
Communication	Zigbee
Degree of protection	IP20
Medium temperature	20...70 °C
Ambient humidity, operation	65 % r.h.
Dimensions (W x H x D)	62 x 67 x 81 mm
Operating voltage	3.0 V
Warranty	60 Months

Stock no.	Product no.
S55181-A105	SSA911.02ZB

Electromotoric actuators 100 N for valves with 1.2..6.5 mm stroke

SSA..KN

For pressure independent combi valves (PICV), radiator valves, MiniCombi valves (MCV) and small globe valves.
Electromotoric actuators with KNX S-Mode and PL-Link communication for radiator, chilled ceiling, VAV and fan coil unit applications. With automatic stroke adaption, force-dependent switching off in the end position, LED position indication, and manual operation. Suited for use with Siemens PICV VPP46../VPI46.., Siemens radiator valves VDN../VEN../VUN.., Siemens MiniCombi valves VPD../VPE.., Siemens small valves VD1..CLC and on radiator valves with M30 x 1.5 connection without adapter (Heimeier, Cazzaniga, Oventrop M30x1.5, Honeywell-Braukmann, MNG, Junkers, Beulco new). Further valves of other manufacturers on request.

For fitting to the valve: Cap nut M30 x 1.5

Data sheet	A6V11858280
Positioning force	100 N
Stroke	1.2 mm 6.5 mm
Positioning time	50/100 s
Communication	KNX-TP
Degree of protection	IP54
Medium temperature	1...110 °C
Ambient humidity, operation	5...85 % r.h.
Dimensions (W x H x D)	88.6 x 83.4 x 51.4 mm
Mounting position	360°
Warranty	60 Months

Range overview SSA..KN

Operating voltage [V]	Auxiliary switch	Cable length [m]	Stock no.	Product no.
DC 21...30 24	0	1.5	S55180-A111	**SSA118.09HKN**

8

New Product

Actuators for globe and pressure independent control valves (PICV)
Electromotoric

SSA31.04

Electromotoric actuator, 160 N, 2.5 mm, 1.5 m, AC 230 V, 3P, SPDT

For V..I46.. zone valves

Electromotoric actuators for 3-position or SPDT control of zone valves V..I46.. with internally threaded connections. For 3-position or SPDT (open/close) control of heating systems, domestic hot water storage tank charging as well as terminal units and zones. The actuators have automatic stroke adaption, force-dependent switching off in the end positions, position indication, manual control and 1.5 m connecting cable.
Not suitable for radiator valves (soft seal).

For fitting to the valve: Cap nut M30 x 1.5

Data sheet	N4860
Positioning force	160 N
Stroke	2.5 mm
Power consumption	6 VA
Positioning time	43 s
Cable length	1.5 m
Positioning signal	3-position SPDT
Degree of protection	IP40
Medium temperature	1...110 °C
Ambient humidity, operation	5...85 % r.h.
Dimensions (W x H x D)	98 x 96 x 48 mm
Mounting position	Upright to 90° inclined
Operating voltage	AC 230 V
Position feedback	None
Auxiliary switch	0
Warranty	60 Months

	Stock no.	Product no.
	BPZ:SSA31.04	**SSA31.04**

Accessories for SSA31.04

Product Title	Data sheet	Stock no.	Product no.
Retaining screw for cable connector		BPZ:ASY98	**ASY98**

8

Electromotoric actuators 135 N for small valves V..P47..

SFP21../SFP71..

For small valves VVP47.., VXP47.. and VMP47..

Together with VVP47.., VXP47.. and VMP47.., they offer high-quality on/off control. Versions for AC 24 V and AC 230 V available. For on/off control of terminal units and heating and cooling zones. The actuators offer a low noise level, have a manual lever, power fail reset function (NC valve closed) and 1.8 m connecting cable. 1 auxiliary switch is available as an accessory item. The combination with a 3-port valve is suited for applications requiring tight shutoff in both valve end positions.

For fitting to the valve: Cap nut M30 x 1.5

Data sheet	N4865
Positioning force	135 N
Stroke	2.5 mm
Positioning time	10 s
Degree of protection	IP30
Dimensions (W x H x D)	83 x 121 x 59 mm
Mounting position	Upright to 85° inclined
Positioning signal	2-position
Warranty	60 Months

Range overview SFP21../SFP71..

Operating voltage [V]	Power consumption [VA]	Auxiliary switch	Cable length [m]	Stock no.	Product no.
AC 230	9.8	Optional	1.8	BPZ:SFP21/18	**SFP21/18**
AC 24	9.8	Optional	1.8	BPZ:SFP71/18	**SFP71/18**

Auxilary switch: Changeover contact AC 250 V, 3 A res., 2 A ind., adjustable switching point 50 %.

Accessories for SFP21../SFP71..

Product Title	Data sheet	Stock no.	Product no.
Auxiliary switch for SFA21.../ SFA71.../ SFP21.../ SFP71...	N4863	BPZ:ASC2.1/18	**ASC2.1/18**

Actuators for globe and pressure independent control valves (PICV) Electromotoric

SUA..

Electromotive actuator 170N for zone valves, 100N for on/off PICVtive

Electromotive actuator without spring return SUA21/3 for VVI46..and VXI46..zone valves, SUA21/3P for VQI46.. and VQP46.. on/off PICVtive. Primarily used in heating, ventilation and air conditioning systems for water-based control of hot water and cold water.

- Heating and cooling zones
- Control valves for fan coil units
- Zone valve for floor heating via heating distributors (manifolds)
- Chilled ceiling units
- On/off control for domestic hot water boilers
- Shut off valve for wall mounted boiler applications

For fitting to the valve: plastic union nut M30 x 1.5

Positioning force	150 N
Stroke	2.5 mm
Degree of protection	IP40
Medium temperature	1...110 °C
Dimensions (W x H x D)	95 x 77 x 56 mm
Mounting position	Upright to 85 ° horizontal, do not suspend
Warranty	60 Months

Range overview SUA..

Operating voltage [V]	Positioning signal	Power consumption	Auxiliary switch	Spring return function	Cable length [m]	Stock no.	Product no.
AC 230	2-position (SPST)	6 VA at 50 Hz	0	No	0.8	S55176-A104	**SUA21/3**
AC 230	2-position (SPST)	6 VA at 50 Hz		No	0.8	S55176-A105	**SUA21/3P**

SUE..

Electromotoric actuator 100 N for combi valves

For fitting to the valve: plastic union nut M30 x 1.5

Positioning force	100 N
Stroke	5 mm
Nominal stroke	5 mm
Degree of protection	IP40
Medium temperature	1...110 °C
Dimensions (W x H x D)	95 x 77 x 56 mm
Mounting position	Upright to 90°, horizontal; do not suspend
Warranty	60 Months

Range overview SUE..

Operating voltage [V]	Positioning signal	Power consumption	Spring return function	Cable length [m]	Stock no.	Product no.
AC 230	2-position (SPST)	6V VA at 50 Hz	No	0.8	S55176-A106	**SUE21P**

Electromotoric actuators 160 N for valves with 2.5 mm stroke

SSP..

- For small valves VVP47.., VXP47.. and VMP47..
- For retrofitting the small valves 2W.., 3W.. and 4W.. with adapter AL100.

Electromotoric actuators for modulating or 3-position control of small valves for terminal units and heating and cooling zones. With position indication, manual control, automatic stroke adaption, force-dependent switching off in the end positions and plug-in type connecting cable.

For fitting to the valve: Cap nut M30 x 1.5.
SSP81.., SSP61.. are CE, C-tick, UL and cUL listed.

Data sheet	N4864
Positioning force	160 N
Stroke	2.5 mm, max. 5.5 mm
Degree of protection	IP40
Medium temperature	1...110 °C
Mounting position	Upright to 90° inclined
Warranty	60 Months

Range overview SSP..

Operating voltage [V]	Power consumption [VA]	Auxiliary switch	Positioning signal	Positioning time [s]	Cable length [m]	Stock no.	Product no.
AC 230	6	0	3-position	150	1.5	BPZ:SSP31	**SSP31**
AC/DC 24	2.5	0	DC 0...10 V	34	1.5	BPZ:SSP61	**SSP61**
AC 24	0.8	0	3-position	150	1.5	BPZ:SSP81	**SSP81**
AC 24	0.8	0	3-position	43	1.5	BPZ:SSP81.04	**SSP81.04**

Positioning time for 2.5 mm stroke.

Accessories for SSP..

Product Title	Stock no.	Product no.
Retrofit adapter for installed 2W..., 3W..., 4W... valves	BPZ:AL100	**AL100**
Connecting cable, 2.5 m, 3-position, AC 230 V	BPZ:ASY3L25	**ASY3L25**
Connecting cable, 4.5 m, 3-position, AC 230 V	BPZ:ASY3L45	**ASY3L45**
Connecting cable, 2.5 m, DC 0...10 V, AC/DC 24 V	BPZ:ASY6L25	**ASY6L25**
Connecting cable, 4.5 m, DC 0..10 V, AC/DC 24 V	BPZ:ASY6L45	**ASY6L45**
Connecting cable, 4.5 m, DC 0...10 V, AC/DC 24 V, halogen-free, VDE 0207-24	BPZ:ASY6L45HF	**ASY6L45HF**
Connecting cable, 2.5 m, 3-position, AC 24 V	BPZ:ASY8L25	**ASY8L25**
Connecting cable, 4.5 m, 3-position, AC 24 V	BPZ:ASY8L45	**ASY8L45**
Connecting cable, 4.5 m, 3-position, AC 24 V, halogen-free, VDE 0207-24	BPZ:ASY8L45HF	**ASY8L45HF**
Retaining screw for cable connector	BPZ:ASY98	**ASY98**
Terminal block connector 3 position, AC 24 V for SSA81../SSB81../SSD81../SSP81..	BPZ:ASY99	**ASY99**
Terminal block connector DC0...10 V, AC 24 V for SSA61../SSB61../SSP61../SSD61..	BPZ:ASY100	**ASY100**
	BPZ:ASY1..	**ASY1..**

Actuators for globe and pressure independent control valves (PICV)
Electromotoric

SFA21.. / SFA71..

Electromotoric actuators 200 N for small valves V..I46..

For VVI46.. and VXI46.. zone valves, AC 24 V and AC 230 V versions.

Electromotoric actuators for on/off control of zone. For on/off control of terminal units and heating and cooling zones. The actuators are equipped with a manual lever, spring return facility (NO valve closed) and 1.8 m connecting cable. 1 auxiliary switch is available as an accessory item.

For fitting to the valve: Cap nut M30 x 1.5

Data sheet	N4863
Positioning force	200 N
Positioning signal	2-position
Positioning time	10 s
Stroke	2.5 mm
Degree of protection	IP30
Medium temperature	1...110 °C
Mounting position	Upright to 85° inclined
Warranty	60 Months

Range overview SFA21.. / SFA71..

Operating voltage [V]	Power consumption [VA]	Auxiliary switch	Cable length [m]	Stock no.	Product no.
AC 230	12	Optional	1.8	BPZ:SFA21/18	**SFA21/18**
AC 24	12	Optional	1.8	BPZ:SFA71/18	**SFA71/18**

Auxilary switch: Changeover contact AC 250 V, 3 A res., 2 A ind., adjustable switching point 50 %.

Accessories for SFA21.. / SFA71..

Product Title	Data sheet	Stock no.	Product no.
Auxiliary switch for SFA21.../ SFA71.../ SFP21.../ SFP71...	N4863	BPZ:ASC2.1/18	**ASC2.1/18**

Electromotoric actuators 200 N for valves with 5.5 mm stroke

SSB..

For small valves V..P45.. .

Electromotoric actuators for modulating or 3-position control of small valves for terminal units and chilled ceilings. With position indication, manual control and plug-in type connecting cable 1.5 m. Automatic stroke adaption and force-dependent switching off in the end position.

For fitting to the valve: Cap nut G¾"
SSB61.., SSB81.. are CE, C-tick, UL and cUL listed.

Data sheet	N4891
Positioning force	200 N
Stroke	5.5 mm
Degree of protection	IP40
Medium temperature	1...110 °C
Ambient humidity, operation	5...85 % r.h.
Mounting position	Upright to 90° inclined
Warranty	60 Months

Range overview SSB..

Operating voltage [V]	Positioning signal	Power consumption [VA]	Auxiliary switch	Spring return function	Cable length [m]	Stock no.	Product no.
AC 230	3-position	6	0	No	1.5	BPZ:SSB31	**SSB31**
AC 230	3-position	6	1		1.5	BPZ:SSB31.1	**SSB31.1**
AC/DC 24	DC 0...10 V	2.5	0	No	1.5	BPZ:SSB61	**SSB61**
AC 24	3-position	0.8	0	No	1.5	BPZ:SSB81	**SSB81**
AC 24	3-position	0.8	1		1.5	BPZ:SSB81.1	**SSB81.1**

Auxilary switch: Changeover contact AC 250 V, 1 A res., 0.5 A ind., adjustable switching point 0...100 %.

Electromotoric actuator, 200 N, 1.2...6.5 mm, AC/DC 24 V, DC 0...10 V

SSB161.05HF

- For small valves 2W..K.., 3W.., 4W..
- For zone valves VVP.., VXP.., VMP..
- Typically in chilled ceiling, VAV and fan coil unit applications
- Self calibrating to the valve stroke
- Direct mounting with coupling nut, no tools required
- Manually adjustable, position and actuator motion indication (LED)
- Parallel operation of multiple actuators possible
- Removable cable, standard length 1.5 m

Data sheet	A6V12681511
Positioning force	200 N
Stroke	1.2 mm 6.5 mm
Power consumption	3 VA
Positioning time	12.5 s for 2.5 mm stroke
Cable length	1.5 m
Positioning signal	DC 0...10 V
Degree of protection	IP54
Medium temperature	1...110 °C
Ambient humidity, operation	5...85 % r.h.
Dimensions (W x H x D)	104.4 x 92.6 x 49 mm
Mounting position	360°
Operating voltage	AC 24 V DC 24 V
Warranty	60 Months

Stock no.	Product no.
S55180-A134	**SSB161.05HF**

SSB161.05HF/00

Electromotoric actuator, 200 N, 1.2...6.5 mm, AC/DC 24 V, DC 0...10 V

- For small valves 2W..K.., 3W.., 4W..
- For zone valves VVP.., VXP.., VMP..
- Typically in chilled ceiling, VAV and fan coil unit applications
- Self calibrating to the valve stroke
- Direct mounting with coupling nut, no tools required
- Manually adjustable, position and actuator motion indication (LED)
- Parallel operation of multiple actuators possible
- Without cable

Data sheet	A6V12681511
Stroke	1.2 mm 6.5 mm
Power consumption	3 VA
Positioning time	12.5 s for 2.5 mm stroke
Cable length	1.5 m
Positioning signal	DC 0...10 V
Degree of protection	IP54
Medium temperature	1...110 °C
Ambient humidity, operation	5...85 % r.h.
Dimensions (W x H x D)	104.4 x 92.6 x 49 mm
Mounting position	360°
Operating voltage	AC 24 V DC 24 V
Warranty	60 Months

Stock no.	Product no.
S55180-A146	**SSB161.05HF/00**

New Product

Accessories for SSB..

Product Title	Stock no.	Product no.
Connecting cable, 2.5 m, 3-position, AC 230 V	BPZ:ASY3L25	**ASY3L25**
Connecting cable, 4.5 m, 3-position, AC 230 V	BPZ:ASY3L45	**ASY3L45**
Connecting cable, 2.5 m, DC 0...10 V, AC/DC 24 V	BPZ:ASY6L25	**ASY6L25**
Connecting cable, 4.5 m, DC 0..10 V, AC/DC 24 V	BPZ:ASY6L45	**ASY6L45**
Connecting cable, 4.5 m, DC 0...10 V, AC/DC 24 V, halogen-free, VDE 0207-24	BPZ:ASY6L45HF	**ASY6L45HF**
Connecting cable, 2.5 m, 3-position, AC 24 V	BPZ:ASY8L25	**ASY8L25**
Connecting cable, 4.5 m, 3-position, AC 24 V	BPZ:ASY8L45	**ASY8L45**
Connecting cable, 4.5 m, 3-position, AC 24 V, halogen-free, VDE 0207-24	BPZ:ASY8L45HF	**ASY8L45HF**
Retaining screw for cable connector	BPZ:ASY98	**ASY98**
Terminal block connector 3 position, AC 24 V for SSA81../SSB81../SSD81../SSP81..	BPZ:ASY99	**ASY99**
Terminal block connector DC0...10 V, AC 24 V for SSA61../SSB61../SSP61../SSD61..	BPZ:ASY100	**ASY100**
	BPZ:ASY1..	**ASY1..**

Electromotoric actuator, 200 N, 1.2...6.5 mm, AC/DC 24 V, DC 0...10 V — SSF161.05HF

- For small valves 2W..K.., 3W.., 4W..
- For zone valves VVP.., VXP.., VMP..
- Typically in chilled ceiling, VAV and fan coil unit applications
- Self calibrating to the valve stroke
- Direct mounting with coupling nut, no tools required
- Manually adjustable, position and actuator motion indication (LED)
- Parallel operation of multiple actuators possible
- Removable cable, standard length 1.5 m

Data sheet	A6V12681511
Force	200 N
Stroke	1.2 mm
	6.5 mm
Power consumption	3 VA
Positioning time	12.5 s for 2.5 mm stroke
Cable length	1.5 m
Positioning signal	DC 0...10 V
Degree of protection	IP54
Medium temperature	1...110 °C
Ambient humidity, operation	5...85 % r.h.
Dimensions (W x H x D)	104.4 x 92.6 x 49 mm
Mounting position	360°
Operating voltage	AC 24 V
	DC 24 V
Warranty	60 Months

Stock no.	Product no.
S55180-A131	**SSF161.05HF**

8

SSF161.05HF/00 Electromotoric actuator, 200 N, 1.2...6.5 mm, AC/DC 24 V, DC 0...10 V

- For small valves 2W..K.., 3W.., 4W..
- For zone valves VVP.., VXP.., VMP..
- Typically in chilled ceiling, VAV and fan coil unit applications
- Self calibrating to the valve stroke
- Direct mounting with coupling nut, no tools required
- Manually adjustable, position and actuator motion indication (LED)
- Parallel operation of multiple actuators possible
- Without cable

Data sheet	A6V12681511
Force	200 N
Stroke	1.2 mm 6.5 mm
Power consumption	3 VA
Positioning time	12.5 s for 2.5 mm stroke
Cable length	1.5 m
Positioning signal	DC 0...10 V
Degree of protection	IP54
Medium temperature	1...110 °C
Ambient humidity, operation	5...85 % r.h.
Dimensions (W x H x D)	104.4 x 92.6 x 49 mm
Mounting position	360°
Operating voltage	AC 24 V DC 24 V
Warranty	60 Months

Stock no.	Product no.
S55180-A145	SSF161.05HF/00

8

New Product

Electromotoric actuator, 300 N, for valves with 5.5 mm stroke

SSC..

Manual control with automatic reset to control mode. Overload-proof through force-dependent switching off in the end position. With plastic housing and cap nut for fitting on threaded valves with 5.5 mm stroke.

Data sheet	N4895
Positioning force	300 N
Stroke	5.5 mm
Degree of protection	IP40
Medium temperature	1...110 °C
Mounting position	Upright to horizontal
Warranty	60 Months

Range overview SSC..

Operating voltage [V]	Positioning signal	Power consumption [VA]	Auxiliary switch	Spring return function	Stock no.	Product no.
AC 230	3-position	6	0	No	BPZ:SSC31	**SSC31**
AC/DC 24	DC 0...10 V	2	0	No	BPZ:SSC61	**SSC61**
AC/DC 24	DC 0...10 V	2	0	Yes (15 s)	BPZ:SSC61.5	**SSC61.5**
AC 24	3-position	0.8	0	No	BPZ:SSC81	**SSC81**

SSC61.5: Power consumption when connecting power for the first time 3 VA.

Electromotoric actuator, 200 N, 1.2...6.5 mm, AC/DC 24 V, DC 0...10 V

SSB161.05UT

- For small valves 2W..K.., 3W.., 4W..
- For zone valves VVP.., VXP.., VMP..
- Typically in chilled ceiling, VAV and fan coil unit applications
- Self calibrating to the valve stroke
- Direct mounting with coupling nut, no tools required
- Manually adjustable, position and actuator motion indication (LED)
- Parallel operation of multiple actuators possible
- Terminal block, special cable lengths for AC/DC 24V actuators

Data sheet	A6V13359034
Positioning force	200 N
Stroke	1.2 mm 6.5 mm
Power consumption	3 VA
Positioning time	12.5 s for 2.5 mm stroke
Degree of protection	IP54
Medium temperature	1...110 °C
Ambient humidity, operation	5...85 % r.h.
Dimensions (W x H x D)	114.3 x 92.6 x 49 mm
Mounting position	360°
Operating voltage	AC 24 V DC 24 V
Warranty	60 Months

	Stock no.	Product no.
	S55180-A148	**SSB161.05UT**

8

New Product

SSC161.05HF

Electromotoric actuator, 300 N, 1.2...6.5 mm, AC/DC 24 V, DC 0...10 V

- For zone valves VVP.., VXP.., VMP..
- For Landis & Gyr valves: compatible with SSC161.05HF
- Typically in chilled ceiling, VAV and fan coil unit applications
- Self calibrating to the valve stroke
- Direct mounting with coupling nut, no tools required
- Manually adjustable, position and actuator motion indication (LED)
- Parallel operation of multiple actuators possible
- Removable cable, standard length 1.5 m

Data sheet	A6V12681511
Positioning force	300 N
Stroke	1.2 mm 6.5 mm
Power consumption	3.5 VA
Positioning time	12.5 s for 2.5 mm stroke
Cable length	1.5 m
Positioning signal	DC 0...10 V
Degree of protection	IP54
Medium temperature	1...110 °C
Ambient humidity, operation	5...85 % r.h.
Dimensions (W x H x D)	104.4 x 92.6 x 49 mm mm
Mounting position	360°
Operating voltage	AC 24 V DC 24 V
Warranty	60 Months

Stock no.	Product no.
S55155-A101	**SSC161.05HF**

SSC161.05HF/00

Electromotoric actuator, 300 N, 1.2...6.5 mm, AC/DC 24 V, DC 0...10 V

- For small valves 2W..K.., 3W.., 4W..
- For zone valves VVP.., VXP.., VMP..
- Typically in chilled ceiling, VAV and fan coil unit applications
- Self calibrating to the valve stroke
- Direct mounting with coupling nut, no tools required
- Manually adjustable, position and actuator motion indication (LED)
- Parallel operation of multiple actuators possible
- Without cable

Data sheet	A6V12681511
Stroke	1.2 mm 6.5 mm
Power consumption	3 VA
Positioning time	12.5 s for 2.5 mm stroke
Cable length	1.5 m
Positioning signal	DC 0...10 V
Degree of protection	IP54
Medium temperature	1...110 °C
Ambient humidity, operation	5...85 % r.h.
Dimensions (W x H x D)	104.4 x 92.6 x 49 mm
Mounting position	360°
Operating voltage	AC 24 V DC 24 V
Warranty	60 Months

Stock no.	Product no.
S55180-A147	**SSC161.05HF/00**

New Product

Electromotoric actuator, 300 N, 1.2...6.5 mm, AC/DC 24 V, DC 0...10 V

SSC161.05UT

- For small valves 2W..K.., 3W.., 4W..
- For zone valves VVP.., VXP.., VMP..
- Typically in chilled ceiling, VAV and fan coil unit applications
- Self calibrating to the valve stroke
- Direct mounting with coupling nut, no tools required
- Manually adjustable, position and actuator motion indication (LED)
- Parallel operation of multiple actuators possible
- Terminal block, special cable lengths for AC/DC 24V actuators

Data sheet	A6V13359035
Positioning force	300 N
Stroke	1.2 mm 6.5 mm
Power consumption	3.5 VA
Positioning time	12.5 s for 2.5 mm stroke
Degree of protection	IP54
Medium temperature	1...110 °C
Ambient humidity, operation	5...85 % r.h.
Dimensions (W x H x D)	132.7 x 95.6 x 49 mm
Mounting position	360°
Operating voltage	AC 24 V DC 24 V
Warranty	60 Months

	Stock no.	Product no.
	S55180-A149	**SSC161.05UT**

Accessories for SSC..

Product Title	Data sheet	Stock no.	Product no.
Adapter to upgrade older Landis&Gyr valves	N4573	BPZ:ASK30	**ASK30**

8

Actuators for globe and pressure independent control valves (PICV) Electromotoric

SAS..

Electromotoric actuators 400 N for valves with 5.5 mm stroke

Electromotoric actuator for the operation of Siemens 2-port and 3-port valves, types VVG44.., VXG44.. and VVG549.. with 5.5 mm stroke as control and shut-off valves in heating, ventilation and air conditioning systems. With manual adjuster and position indicator, status indication per LED. Optional functions with auxiliary switches.

SA..81.., SA..61.. are UL listed.

Data sheet	N4581
Positioning force	400 N
Stroke	5.5 mm
Degree of protection	IP54
Medium temperature	1...130 °C
Mounting position	Upright to horizontal
Position feedback	DC 0...10 V (SA..6..)
Warranty	60 Months

Range overview SAS..

Operating voltage [V]	Power consumption [VA]	Auxiliary switch	Positioning signal	Positioning time [s]	Spring return function	Stock no.	Product no.
AC 230	2.8	0	3-position	120	No	S55158-A106	**SAS31.00**
AC 230	3.5	0	3-position	30	No	S55158-A107	**SAS31.03**
AC 230	3.5	0	3-position	120	Yes (28 s)	S55158-A108	**SAS31.50**
AC 230	5.5	0	3-position	30	Yes (14 s)	S55158-A109	**SAS31.53**
AC/DC 24	5.3	0	DC 0...10 V DC 4...20 mA 0...1000 Ohm	30	No	S55158-A100	**SAS61.03**
AC/DC 24	6.0	0	Modbus RTU	30		S55158-A121	**SAS61.03/MO**
AC/DC 24	5.9	0	DC 0...10 V DC 4...20 mA 0...1000 Ohm	30	Yes (14 s)	S55158-A101	**SAS61.33**
AC/DC 24	5.9		Modbus RTU	30	Yes (14 s)	S55158-A122	**SAS61.33/MO**
AC/DC 24	5.8	0	DC 0...10 V DC 4...20 mA 0...1000 Ohm	30	Yes (14 s)	S55158-A102	**SAS61.53**
AC/DC 24	2.2	0	3-position	120	No	S55158-A103	**SAS81.00**
AC/DC 24	2.5	0	3-position	30	No	S55158-A104	**SAS81.03**
AC/DC 24	3.4	0	3-position	30	Yes (14 s)	S55158-A105	**SAS81.33**

8

Accessories for SAS..

Product Title	Data sheet	Stock no.	Product no.
Auxiliary switch for SA..31../SA..61../SA..81..	N4501	S55845-Z103	**ASC10.51**
Adapter to upgrade older Landis&Gyr valves	N4573	BPZ:ASK30	**ASK30**
Weathershild for SAS../SAT../SAK..		S55845-Z155	**ASK39.2**

Electromotoric actuators 300 N for valves with 5.5 mm stroke

SAT..

Electromotoric actuators for the operation of Siemens 2-port valves VVG549.., kvs value 0.25-6.3 m³/h with 5.5 mm stroke as control valve in district heating applications. With manual adjuster and position indicator, status indication per LED. Optional functions with auxiliary switches.

SA..61.. are UL listed.

Data sheet	N4584
Positioning force	300 N
Stroke	5.5 mm
Degree of protection	IP54
Medium temperature	1...150 °C
Mounting position	Upright to horizontal
Position feedback	DC 0...10 V (SA..6..)
Warranty	60 Months

Range overview SAT..

Operating voltage [V]	Positioning signal	Power consumption [VA]	Positioning time [s]	Spring return function	Stock no.	Product no.
AC 230	3-position	5	8	No	S55158-A119	**SAT31.008**
AC 230	3-position	5.5	15	Yes (8 s)	S55158-A120	**SAT31.51**
AC/DC 24	DC 0...10 V DC 4...20 mA 0...1000 Ohm	7.1	8	No	S55158-A117	**SAT61.008**
AC/DC 24	Modbus RTU	7.1	8	No	S55158-A123	**SAT61.008/MO**
AC/DC 24	DC 0...10 V DC 4...20 mA 0...1000 Ohm	6.4	15	Yes (8 s)	S55158-A118	**SAT61.51**
AC/DC 24	Modbus RTU	6.4	15	Yes (8 s)	S55158-A124	**SAT61.51/MO**

Accessories for SAT..

Product Title	Data sheet	Stock no.	Product no.
Auxiliary switch for SA..31../SA..61../SA..81..	N4501	S55845-Z103	**ASC10.51**
Adapter to upgrade older Landis&Gyr valves	N4573	BPZ:ASK30	**ASK30**
Weathershild for SAS../SAT../SAK..		S55845-Z155	**ASK39.2**

Actuators for globe and pressure independent control valves (PICV) Electromotoric

SBX..

Electromotoric actuators for seat valves

For operation with Siemens 2-port and 3-port valves, types VVF47.., VXF47.. with 20 mm stroke as control valves in heating, ventilation and air conditioning systems

Data sheet	N4519
Positioning force	700 N
Nominal stroke	20 mm
Positioning time	120 s
Degree of protection	IP54
Ambient temperature, operation	-10...55 °C
Medium temperature	1...95 °C
Mounting position	Upright to horizontal
Warranty	60 Months

Range overview SBX..

For customers in Asia / Australia

Operating voltage [V]	Positioning signal	Power consumption [VA]	Stock no.	Product no.
AC 24	4...20 mA	5	S55160-A108	**SBX151.00**
AC 230	3-position	9	S55160-A102	**SBX31**
AC 24	DC 0...10 V	5	S55160-A100	**SBX61**
AC 24	3-position	4	S55160-A101	**SBX81**

Accessories for SBX..

Product Title	Data sheet	Stock no.	Product no.
Function module 4...20 mA for SBX61, SBV61	N4519	S55845-Z120	**AZX420**

Electromotoric actuators 800 N for valve with 20 mm stroke

SAX..

Electromotoric actuator for the operation of Siemens 2-port and 3-port valves, types VVF.., VVG.., VXF.. and VXG.. with 20 mm stroke as control and safety shut-off valves in heating, ventilation and air conditioning systems.
With manual adjuster and position indicator, status indication per LED.
Optional functions with auxiliary switches, potentiometer, functional module and stem heater.

Data sheet	N4501
Positioning force	800 N
Stroke	20 mm
Degree of protection	IP54
Ambient temperature, operation	-5...55 °C
Medium temperature	-25...130 °C
Mounting position	Upright to horizontal
Position feedback	DC 0...10 V (SA..6..)
Spring return function	No
Warranty	60 Months

Range overview SAX..

Operating voltage [V]	Positioning signal	Power consumption [VA]	Auxiliary switch	Positioning time [s]	Cable length [m]	Stock no.	Product no.
AC 230	3-position	3.5	Optional	120		S55150-A105	**SAX31.00**
AC/DC 24	DC 0...10 V DC 4...20 mA 0...1000 Ohm	8		30		S55150-A152-A559	**SAX61.03/FX**
AC 230	3-position	6	Optional	30		S55150-A106	**SAX31.03**
AC/DC 24	DC 0...10 V DC 4...20 mA 0...1000 Ohm	8	Optional	30		S55150-A100	**SAX61.03**
AC/DC 24	Modbus RTU	8.7	Optional	30	0.9	S55150-A140	**SAX61.03/MO**
AC/DC 24	3-position	3.5	Optional	120		S55150-A102	**SAX81.00**
AC/DC 24	3-position	5	Optional	30		S55150-A103	**SAX81.03**

Accessories for SAX..

Product Title	Data sheet	Stock no.	Product no.
Auxiliary switch for SA..31../SA..61../SA..81..	N4501	S55845-Z103	**ASC10.51**
Potentiometer 0...1000 Ohm for SA..31../SA..81..	N4501	S55845-Z106	**ASZ7.5/1000**
Funtion module for SA..61.., sequence control/changeover of acting direction	N4501	S55845-Z107	**AZX61.1**
Stem heating element for media < 0 °C	N4501	S55845-Z108	**ASZ6.6**
Weathershield for SAX../SAL..	N4501	S55845-Z109	**ASK39.1**

Actuators for globe and pressure independent control valves (PICV) Electromotoric

SAX..P..

Electromotoric actuators 500 N for Combi valves VPF44../VPF54..

Electromotoric actuator for the operation of Siemens Combi valves, types VPF44../VPF54.. with 20 mm stroke as control valves in ventilation, air conditioning, district heating and cooling systems. With manual adjuster and position indicator, status indication per LED. With manual adjuster and position indicator, status indication per LED. Optional functions with auxiliary switches, potentiometer, functional module and stem heater.

SA..81P.., SA..61P.. are UL listed.

Data sheet	N4509
Positioning force	500 N
Stroke	20 mm
Degree of protection	IP54
Ambient temperature, operation	5...55 °C
Medium temperature	1...100 °C
Mounting position	Upright to horizontal
Position feedback	DC 0...10 V (SAX6..)
Warranty	60 Months

Range overview SAX..P..

Operating voltage [V]	Positioning signal	Power consumption [VA]	Auxiliary switch	Positioning time [s]	Stock no.	Product no.
AC 230	3-position	8	Optional	30	S55150-A118	**SAX31P03**
AC/DC 24	DC 0...10 V DC 4...20 mA 0...1000 Ohm	8	Optional	30	S55150-A114	**SAX61P03**
AC/DC 24	Modbus RTU	8	Optional	30	S55150-A143	**SAX61P03/MO**
AC/DC 24	3-position	5	Optional	30	S55150-A116	**SAX81P03**

Accessories for SAX..P

Product Title	Data sheet	Stock no.	Product no.
Auxiliary switch for SA..31../SA..61../SA..81..	N4501	S55845-Z103	**ASC10.51**
Potentiometer 0...1000 Ohm for SA..31../SA..81..	N4501	S55845-Z106	**ASZ7.5/1000**
Funtion module for SA..61.., sequence control/changeover of acting direction	N4501	S55845-Z107	**AZX61.1**
Weathershield for SAX../SAL..	N4501	S55845-Z109	**ASK39.1**

Electromotoric actuators 200 N for Combi valves VPI46 with a 15 mm stroke

SAY..P..

Electromotoric actuator for the operation of Siemens Combi valves, types VPI46.40F9.5Q and VPI46.50F12Q with 15 mm stroke as control valves in ventilation, air conditioning, district heating and cooling systems. With manual adjuster and position indicator, status indication per LED. Optional functions with auxiliary switches, potentiometer, functional module and stem heater.

Data sheet	A6V10628469
Positioning force	200 N
Stroke	15 mm
Spring return function	No
Degree of protection	IP54
Ambient temperature, operation	5...55 °C
Medium temperature	1...120 °C
Mounting position	Upright to horizontal
Warranty	60 Months

Range overview SAY..P..

Operating voltage [V]	Positioning signal	Power consumption [VA]	Auxiliary switch	Positioning time [s]	Stock no.	Product no.
AC 230	3-position	6	Optional	30	S55150-A132	**SAY31P03**
AC/DC 24	DC 0...10 V DC 4...20 mA 0...1000 Ohm	8	Optional	30	S55150-A133	**SAY61P03**
AC/DC 24	Modbus RTU	8	0	30	S55150-A145	**SAY61P03/MO**
AC/DC 24	3-position	5	Optional	30	S55150-A134	**SAY81P03**

Accessories for SAY..P..

Product Title	Data sheet	Stock no.	Product no.
Auxiliary switch for SA..31../SA..61../SA..81..	N4501	S55845-Z103	**ASC10.51**
Funtion module for SA..61.., sequence control/changeover of acting direction	N4501	S55845-Z107	**AZX61.1**

Actuators for globe and pressure independent control valves (PICV) Electromotoric

SAV..

Electromotoric actuators 1600 N for valves with 20/40 mm stroke

Electromotoric actuator for the operation of Siemens 2-port and 3-port valves, types VVF.. and VXF.. with 20/40 mm stroke as control and safety shut-off valves in heating, ventilation and air conditioning systems.
With manual adjuster and position indicator, status indication per LED.
Optional functions with auxiliary switches, potentiometer, functional module and stem heater.

Data sheet	N4503
Positioning force	1600 N
Stroke	40 mm
Degree of protection	IP54
Ambient temperature, operation	-5...55 °C
Medium temperature	-25...130 °C (150 °C)
Mounting position	Upright to horizontal, up to 150 °C with horizontal mounting position
Position feedback	DC 0...10 V (SA..6..)
Warranty	60 Months

Range overview SAV..

Operating voltage [V]	Positioning signal	Power consumption [VA]	Auxiliary switch	Spring return function	Positioning time [s]	Cable length [m]	Stock no.	Product no.
AC 230	3-position	6.5	Optional	No	120		S55150-A112	**SAV31.00**
AC/DC 24	DC 0...10 V DC 4...20 mA 0...1000 Ohm	9.5	Optional	No	120		S55150-A110	**SAV61.00**
AC/DC 24	Modbus RTU	9.5	Optional	No	120	0.9	S55150-A141	**SAV61.00/MO**
AC/DC 24	3-position	7	Optional	No	120		S55150-A111	**SAV81.00**

Accessories for SAV..

Product Title	Data sheet	Stock no.	Product no.
Auxiliary switch for SA..31../SA..61../SA..81..	N4501	S55845-Z103	**ASC10.51**
Potentiometer 0...1000 Ohm for SA..31../SA..81..	N4501	S55845-Z106	**ASZ7.5/1000**
Funtion module for SA..61.., sequence control/changeover of acting direction	N4501	S55845-Z107	**AZX61.1**
Stem heating element for media < 0 °C	N4501	S55845-Z108	**ASZ6.6**
Weathershield for SAX../SAL..	N4501	S55845-Z109	**ASK39.1**

Electromotoric actuators 1100 N for Combi valves VPF44../VPF54../VPF43../VPF53..

SAV..P..

Electromotoric actuators for the operation of Siemens combi valves of types VPF44../VPF54../VPF43../VPF53.. with 40 mm stroke as control and safety shut-off valves in ventilation, air conditioning, district heating and refrigerating systems. With manual adjuster and position indicator, status indication per LED. Optional functions with auxiliary switches, potentiometer and functional module.

SA..61P.., SA..81P.. are UL listed.

Data sheet	N4510
Positioning force	1100 N
Stroke	40 mm
Spring return function	No
Degree of protection	IP54
Ambient temperature, operation	5...55 °C
Medium temperature	1...120 °C
Mounting position	Upright to horizontal
Warranty	60 Months

Range overview SAV..P..

Operating voltage [V]	Positioning signal	Power consumption [VA]	Auxiliary switch	Positioning time [s]	Stock no.	Product no.
AC 230	3-position	6.5	Optional	120	S55150-A121	**SAV31P00**
AC/DC 24	DC 0...10 V DC 4...20 mA 0...1000 Ohm	9.5	Optional	120	S55150-A119	**SAV61P00**
AC/DC 24	Modbus RTU	9.5	0	120	S55150-A144	**SAV61P00/MO**
AC/DC 24	3-position	7	Optional	120	S55150-A120	**SAV81P00**

Accessories for SAV..P

Product Title	Data sheet	Stock no.	Product no.
Auxiliary switch for SA..31../SA..61../SA..81..	N4501	S55845-Z103	**ASC10.51**
Potentiometer 0...1000 Ohm for SA..31../SA..81..	N4501	S55845-Z106	**ASZ7.5/1000**
Funtion module for SA..61.., sequence control/changeover of acting direction	N4501	S55845-Z107	**AZX61.1**
Weathershield for SAX../SAL..	N4501	S55845-Z109	**ASK39.1**

Actuators for globe and pressure independent control valves (PICV) Electromotoric

SQV..P..

Electromotoric actuators 1100 N for Combi valves VPF43../53.. and VPF44../VPF54..

Electromotoric actuators for the operation of Siemens Combi valves, types VPF43../53.. and VPF44../VPF54.. with 20/40 mm stroke as control valves in ventilation, air conditioning, district heating and cooling systems. With manual adjuster and position indicator, status indication per LED and with selectable positioning time (20 mm: 40, 60, 90 or 120 s, 40 mm: 80, 120, 180 or 240 s). Optional functions with auxiliary switches, potentiometer and AC 230 V power module.

Actuators SQV..P.. are UL-listed

Data sheet	N4833
Positioning force	1100 N
Stroke	20 mm 40 mm 43 mm
Positioning time	20 mm: 40 s 40 mm: 80 s
Degree of protection	IP66
Ambient temperature, operation	0...55 °C
Medium temperature	1...120 °C
Mounting position	Upright to horizontal
Position feedback	DC 0...10 V
Warranty	60 Months

Range overview SQV..P..

Operating voltage [V]	Positioning signal	Power consumption [VA]	Auxiliary switch	Spring return function	Stock no.	Product no.
AC 24 DC 24	3-position DC 0...10 V DC 4...20 mA	20	Optional	Yes (30 s) Stem retracted	S55150-A130	**SQV91P30**
AC 24 DC 24	3-position DC 0...10 V DC 4...20 mA	20	Optional	Yes (30 s) Stem extended	S55150-A131	**SQV91P40**

Accessories for SQV..P

Product Title	Data sheet	Stock no.	Product no.
Double auxiliary switch for SQV..P..	N4833	S55845-Z137	**ASC10.42**
Potentiometer 0...1000 Ohm for SQV..P..	N4833	S55845-Z136	**ASZ7.6/1000**
AC 230 V adapter for SQV..P..	N4833	S55845-Z138	**ASP1.1**

Electromotoric actuators for seat valves

SBV..

For operation with Siemens 2-port and 3-port valves, types VVF47.., VXF47.. with 40 mm stroke as control valves in heating, ventilation and air conditioning systems

Data sheet	N4519
Positioning force	1600 N
Stroke	40 mm
Positioning time	180 s
Degree of protection	IP54
Ambient temperature, operation	-10...55 °C
Medium temperature	1...95 °C
Mounting position	Upright to horizontal
Warranty	60 Months

Range overview SBV..

For customers in Asia / Australia

Operating voltage [V]	Positioning signal	Power consumption [VA]	Stock no.	Product no.
AC 24	4...20 mA	7	S55160-A109	**SBV151.00**
AC 230	3-position	9	S55160-A105	**SBV31**
AC 24	DC 0...10 V	7	S55160-A103	**SBV61**
AC 24	3-position	7	S55160-A104	**SBV81**

Accessories for SBV..

Product Title	Data sheet	Stock no.	Product no.
Function module 4...20 mA for SBX61, SBV61	N4519	S55845-Z120	**AZX420**

SBV..P

Electromotoric actuators 1600 N for PICV valves VPF44../VPF54../VPF43../VPF53..

Electromotoric actuator for the operation of Siemens PICV valves, types VPF44.., VPF43.., VPF54.. and VPF53.. with 40 mm stroke as control valves in ventilation, air conditioning, district heating and cooling systems.

Data sheet	A6V12232112
Positioning force	1600 N
Stroke	40 mm
Positioning time	180 s
Degree of protection	IP 54
Ambient humidity, operation	5...95 % r.h.
Mounting position	Upright to horizontal
Position feedback	DC 0...10 V (SB..61P)
Warranty	60 Months

Range overview SBV..P

For customers in Asia / Australia

Operating voltage [V]	Positioning signal	Stock no.	Product no.
AC 230	3-position	S55160-A113	**SBV31P**
AC 24	0...10 V	S55160-A114	**SBV61P**
AC 24	3-position	S55160-A115	**SBV81P**

Accessories for SBV..P

Product Title	Data sheet	Stock no.	Product no.
Function module 4...20 mA for SBX61, SBV61	N4519	S55845-Z120	**AZX420**

Electromotoric actuators 700 N for PICV valves VPF44../VPF54.. SBX..P

Electromotoric actuator for the operation of Siemens PICV, types VPF44../VPF54.. with 20 mm stroke as control valves in ventilation, air conditioning, district heating and cooling systems.

Data sheet	A6V12232112
Positioning force	700 N
Stroke	20 mm
Positioning time	120 s
Degree of protection	IP 54
Ambient humidity, operation	5...95 % r.h.
Mounting position	Upright to horizontal
Position feedback	DC 0...10 V (SB..61P)
Warranty	60 Months

Range overview SBX..P

For customers in Asia / Australia

Operating voltage [V]	Positioning signal	Power consumption [VA]	Stock no.	Product no.
AC 230	3-position	9 VA / 9	S55160-A110	**SBX31P**
AC 24	0...10 V	5 VA / 7	S55160-A111	**SBX61P**
AC 24	3-position	4 VA / 7	S55160-A112	**SBX81P**

Accessories for SBX..P

Product Title	Data sheet	Stock no.	Product no.
Function module 4...20 mA for SBX61, SBV61	N4519	S55845-Z120	**AZX420**

Accessories for SBY..P

Product Title	Data sheet	Stock no.	Product no.
Function module 4...20 mA for SBX61, SBV61	N4519	S55845-Z120	**AZX420**

Electromotoric actuators 300 N for PICV valves VPI46.. SBY..P

Electromotoric actuator for the operation of Siemens PICV, types VPI46.. with 15 mm stroke as control valves in ventilation, air conditioning, district heating and cooling systems.

Data sheet	A6V12232112
Positioning force	300 N
Stroke	15 mm
Degree of protection	IP 54
Ambient humidity, operation	5...95 % r.h.
Dimensions (W x H x D)	125 x 256 x 113 mm
Mounting position	Upright to horizontal
Position feedback	DC 0...10 V (SB..61P)
Warranty	60 Months

Range Overview SBY..P

Operating voltage [V]	Stock no.	Product no.
AC 24	S55160-A118	**SBY61P**

Actuators for globe and pressure independent control valves (PICV) Electrohydraulic

SKD32../SKD82..

Electrohydraulic actuators 1000 N for valves with 20 mm stroke

Overload-proof through travel-dependent, fixed switching off in end position. With die-cast aluminium housing and yoke for valves with 20 mm stroke. Optional functions: one auxiliary switch or one potentiometer. With manual control.

SKD..U are UL listed. Control devices MK..5.. are control devices with safety shut-off function per DIN EN 14597.

Data sheet	N4561
Positioning force	1000 N
Stroke	20 mm
Degree of protection	IP54
Medium temperature	-25...150 °C
Ambient temperature, operation	-15...50 °C
Mounting position	Upright to horizontal
Dimensions (W x H x D)	300 x 127 x 169 mm
Warranty	60 Months

Range overview SKD32../SKD82..

Operating voltage [V]	Power consumption [VA]	Positioning signal	Positioning time [s]	Spring return function	Stock no.	Product no.
AC 230	16	3-position	Open:30 Close:10	Yes (8 s)	BPZ:SKD32.21	**SKD32.21**
AC 230	11	3-position	120	No	BPZ:SKD32.50	**SKD32.50**
AC 230	17	3-position	120	Yes (8 s)	BPZ:SKD32.51	**SKD32.51**
AC 24	9	3-position	120	No	BPZ:SKD82.50	**SKD82.50**
AC 24	9	3-position	120	No	BPZ:SKD82.50U	**SKD82.50U**
AC 24	14	3-position	120	Yes (8 s)	BPZ:SKD82.51	**SKD82.51**
AC 24	14	3-position	120	Yes (8 s)	BPZ:SKD82.51U	**SKD82.51U**

Electrohydraulic actuators 1000 N for valves with 20 mm stroke

SKD60/SKD62..

Overload-proof through travel-dependent, electronic switching off in end position. With die-cast aluminium housing and yoke for valves with 20 mm stroke. Optional function with one auxiliary switch. With manual control.

SKD..U, SKD..UA are UL listed. Control devices MK..5.. are control devices with safety shut-off function per DIN EN 14597.

Data sheet	N4561
Positioning force	1000 N
Stroke	20 mm
Position feedback	DC 0...10 V DC 4...20 mA
Degree of protection	IP54
Medium temperature	-25...150 °C
Ambient temperature, operation	-15...50 °C
Mounting position	Upright to horizontal
Dimensions (W x H x D)	127 x 300 x 169 mm
Warranty	60 Months

Range overview SKD60/SKD62..

Operating voltage [V]	Positioning signal	Power consumption [VA]	Positioning time [s]	Spring return function	Stock no.	Product no.
AC 24	DC 0...10 V DC 4...20 mA 0...1000 Ohm	10	Open:30 Close:15	No	BPZ:SKD60	**SKD60**
AC 24 24	DC 0...10 V DC 4...20 mA 0...1000 Ohm	10	Open 30 Close:15	No	BPZ:SKD60U	**SKD60U**
AC 24	DC 0...10 V DC 4...20 mA 0...1000 Ohm	14	Open:30 Close:15	Yes (15 s)	BPZ:SKD62	**SKD62**
AC 24	Modbus RTU	14	Open 30 Close 15	Yes	S55195-A129	**SKD62/MO**
AC 19.2...31.2 24	DC 0...10 V DC 4...20 mA 0...1000 Ohm	14	Open:30 Close:15	Yes (15 s)	BPZ:SKD62U	**SKD62U**
AC 24 24	DC 0...10 V DC 4...20 mA 0...1000 Ohm	14	Open:30 Close:15	Yes (15 s)	BPZ:SKD62UA	**SKD62UA**

Actuators type ..UA provide additional functions: Signal inversion, stroke limitation, and adjustable starting point and operating range.

Actuators for globe and pressure independent control valves (PICV) Electrohydraulic

SKB32../SKB82..

Electrohydraulic actuators 2800 N for valves with 20 mm stroke

Overload-proof through travel-dependent, fixed switching off in end position. With die-cast aluminium housing and yoke for valves with 20 mm stroke. Optional functions: one auxiliary switch or one potentiometer. With manual control.

SKB82..U are UL listed. Control devices MK..6.. are control devices with safety shut-off function per DIN EN 14597.

Data sheet	N4564
Positioning force	2800 N
Stroke	20 mm
Degree of protection	IP54
Medium temperature	-25...220 °C
Ambient temperature, operation	-15...55 °C
Mounting position	Upright to horizontal
Dimensions (W x H x D)	178 x 377 x 227 mm
Warranty	60 Months

Range overview SKB32../SKB82..

Operating voltage [V]	Positioning signal	Power consumption [VA]	Positioning time [s]	Spring return function	Stock no.	Product no.
AC 230	3-position	10	120	No	BPZ:SKB32.50	**SKB32.50**
AC 230	3-position	16	120	Yes (10 s)	BPZ:SKB32.51	**SKB32.51**
AC 24	3-position	8	120	No	BPZ:SKB82.50	**SKB82.50**
AC 24	3-position	12	120	Yes (10 s)	BPZ:SKB82.51	**SKB82.51**
AC 24 24	3-position	8	120	No	BPZ:SKB82.50U	**SKB82.50U**
AC 19.2...28.2 24	3-position	12	120	Yes (10 s)	BPZ:SKB82.51U	**SKB82.51U**

Electrohydraulic actuators 2800 N for valves with 20 mm stroke

SKB60/62..

Overload-proof through travel-dependent, electronic switching off in end position. With die-cast aluminium housing and yoke for valves with 20 mm stroke. Optional function with one auxiliary switch. With manual control.

SKB..U, SKB..UA are UL listed. Control devices MK..6.. are control devices with safety shut-off function per DIN EN 14597.

Data sheet	N4564
Stroke	20 mm
Position feedback	DC 0...10 V DC 4...20 mA
Degree of protection	IP54
Medium temperature	-25...220 °C
Ambient temperature, operation	-15...55 °C
Mounting position	Upright to horizontal
Dimensions (W x H x D)	178 x 375 x 226 mm
Warranty	60 Months

Range overview SKB60/SKB62..

Operating voltage [V]	Positioning signal	Power consumption [VA]	Positioning time [s]	Spring return function	Stock no.	Product no.
AC 24	DC 0...10 V 4...20 mA 0...1000 Ohm	10	Open:120 Close:10	No	BPZ:SKB60	**SKB60**
AC 24	DC 0...10 V 4...20 mA 0...1000 Ohm	14	Open:120 Close:10	Yes (10 s)	BPZ:SKB62	**SKB62**
AC 24	Modbus RTU	14	Open 120 Close 10	Yes	S55195-A127	**SKB62/MO**
AC 24 24	DC 0...10 V 4...20 mA 0...1000 Ohm	14	Open:120 Close:10	Yes (10 s)	BPZ:SKB62U	**SKB62U**
AC 24 24	DC 0...10 V 4...20 mA 0...1000 Ohm	14	Open:120 Close:10	Yes (10 s)	BPZ:SKB62UA	**SKB62UA**

Actuators type ..UA provide additional functions: Signal inversion, stroke limitation, and adjustable starting point and operating range.

Actuators for globe and pressure independent control valves (PICV) Electrohydraulic

SKC32../SKC82..

Electrohydraulic actuators 2800 N for valves with 40 mm stroke

Overload-proof through travel-dependent, fixed switching off in end position. With die-cast aluminium housing and yoke for valves with 40 mm stroke. Optional functions: one auxiliary switch or one potentiometer. With manual control.

SKC..U are UL listed. Control devices MK..6.. are control devices with safety shut-off function per DIN EN 14597.

Data sheet	N4566
Positioning force	2800 N
Stroke	40 mm
Degree of protection	IP54
Medium temperature	-25...220 °C
Ambient temperature, operation	-15...55 °C
Mounting position	Upright to horizontal
Dimensions (W x H x D)	178 x 375 x 226 mm
Warranty	60 Months

Range overview SKC32../SKC82..

Operating voltage [V]	Positioning signal	Power consumption [VA]	Positioning time [s]	Spring return function	Stock no.	Product no.
AC 230	3-position	18	120	No	BPZ:SKC32.60	**SKC32.60**
AC 230	3-position	24	120	Yes (18 s)	BPZ:SKC32.61	**SKC32.61**
AC 24	3-position	15	120	No	BPZ:SKC82.60	**SKC82.60**
AC 24	3-position	19	120	Yes (18 s)	BPZ:SKC82.61	**SKC82.61**
AC 24 24	3-position	15	120	No	BPZ:SKC82.60U	**SKC82.60U**
AC 24 24	3-position	19	120	Yes (18 s)	BPZ:SKC82.61U	**SKC82.61U**

Electrohydraulic actuators 2800 N for valves with 40 mm stroke

SKC60/SKC62..

Overload-proof through travel-dependent, electronic switching off in end position. With die-cast aluminium housing and yoke for valves with 40 mm stroke. Optional function with one auxiliary switch. With manual control.

SKC..U, SKC..UA are UL listed. Control devices MK..6.. are control devices with safety shut-off function per DIN EN 14597.

Data sheet	N4566
Stroke	40 mm
Position feedback	DC 0...10 V DC 4...20 mA
Degree of protection	IP54
Medium temperature	-25...220 °C
Ambient temperature, operation	-15...55 °C
Mounting position	Upright to horizontal
Dimensions (W x H x D)	178 x 375 x 226 mm
Warranty	60 Months

Range overview SKC60/SKC62..

Operating voltage [V]	Positioning signal	Power consumption [VA]	Positioning time [s]	Spring return function	Stock no.	Product no.
AC 24	DC 0...10 V 4...20 mA 0...1000 Ohm	17	Open:120 Close:20	No	BPZ:SKC60	**SKC60**
AC 24	DC 0...10 V 4...20 mA 0...1000 Ohm	21	Open:120 Close:20	Yes (20 s)	BPZ:SKC62	**SKC62**
AC 24	Modbus RTU	21	Open 120 Close 20	Yes	S55195-A128	**SKC62/MO**
AC 24 24	DC 0...10 V 4...20 mA 0...1000 Ohm	21	Open:120 Close:20	Yes (20 s)	BPZ:SKC62U	**SKC62U**
AC 24 24	DC 0...10 V 4...20 mA 0...1000 Ohm	21	Open:120 Close:20	Yes (20 s)	BPZ:SKC62UA	**SKC62UA**

Actuators type ..UA provide additional functions: Signal inversion, stroke limitation, and adjustable starting point and operating range.

Accessories for SKD../SKB../SKC..

Product Title	Data sheet	Stock no.	Product no.
Auxiliary switch for SKB6../ SKC6../ SKD6..	N4566	BPZ:ASC1.6	**ASC1.6**
Double auxiliary switch for SKB/ C/ D32../82..	N4561	BPZ:ASC9.3	**ASC9.3**
Stroke inverter for SKD..	N4561	BPZ:ASK50	**ASK50**
Stroke inverter for SKB..	N4564	BPZ:ASK51	**ASK51**
Potentiometer 0...1000 Ohm for SKB/ C/ D32../82..	N4564	BPZ:ASZ7.3	**ASZ7.3**
Stem heating element for media < 0 °C	N4501	S55845-Z108	**ASZ6.6**

Globe and pressure independent control valve (PICV)
2-port flanged valves

VVF22..

2-port valves with flanged connections, PN6

- With flanged connections to ISO 7005
- For chilled, low and high temperature water and brine in closed circuits

Data sheet	N4401
Stroke	to DN80: 20 mm DN100: 40 mm
Leakage rate	0...0.02% of the kvs value
Medium temperature	-10...130 °C
Valve characteristic	Equal percentage
Rangeability	DN 25: >50 DN 40...100: >100
Permissible operating pressure	600 kPa
Material, valve body	Cast iron EN-GJL-250
Material, inside set	≤ DN40: CrNi steel / brass ≥ DN40: CrNi steel / bronze
PN class	PN 6
Warranty	60 Months

Range overview VVF22..

SAX.. Δp_{max} [kPa]	SAX.. Δp_s [kPa]	SAV.. Δp_{max} [kPa]	SAV.. Δp_s [kPa]	SKD.. Δp_{max} [kPa]	SKD.. Δp_s [kPa]	SKB.. Δp_{max} [kPa]	SKB.. Δp_s [kPa]	SKC.. Δp_{max} [kPa]	SKC.. Δp_s [kPa]	DN	k_{vs} [m³/h]	Stock no.	Product no.
300	600			300	600	300	600			25	2.5	S55200-V100	**VVF22.25-2.5**
300	600			300	600	300	600			25	4	S55200-V101	**VVF22.25-4**
300	600			300	600	300	600			25	6.3	S55200-V102	**VVF22.25-6.3**
300	600			300	600	300	600			25	10	S55200-V103	**VVF22.25-10**
300	550	300	600	300	600	300	600			40	16	S55200-V104	**VVF22.40-16**
300	550	300	600	300	600	300	600			40	25	S55200-V105	**VVF22.40-25**
300	350	300	600	300	450	300	600			50	40	S55200-V106	**VVF22.50-40**
150	200	300	450	200	250	300	600			65	63	S55200-V107	**VVF22.65-63**
75	125	225	250	125	175	300	450			80	100	S55200-V108	**VVF22.80-100**
		125	160					250	300	100	160	S55200-V109	**VVF22.100-160**

For media <0 °C, stem heating element ASZ6.6 is required.

Replacement sealing glands for VVF22..

Product Title	Data sheet	Stock no.	Product no.
Sealing gland complete, stem diameter 10 mm, sealing material EPDM		BPZ:428488060	**428488060**
Sealing gland complete, stem diameter 14 mm, sealing material EPDM, up to 150 °C		BPZ:467956290	**467956290**

8

Combinable actuator for VVF22..

Operating voltage [V]	Positioning signal	Positioning time [s]	Spring return function	Data sheet	Stock no.	Product no.
AC 230	3-position	120	no	N4501	S55150-A105	**SAX31.00**
AC 230	3-position	30	no	N4501	S55150-A106	**SAX31.03**
AC/DC 24	DC 0...10 V DC 4...20 mA 0...1000 Ohm	30	no	N4501	S55150-A100	**SAX61.03**
AC/DC 24	Modbus RTU	30	No	N4501	S55150-A140	**SAX61.03/MO**
AC/DC 24	3-position	120	no	N4501	S55150-A102	**SAX81.00**
AC/DC 24	3-position	30	no	N4501	S55150-A103	**SAX81.03**
AC 230	3-position	120	No	N4503	S55150-A112	**SAV31.00**
AC/DC 24	DC 0...10 V DC 4...20 mA 0...1000 Ohm	120	No	N4503	S55150-A110	**SAV61.00**
AC/DC 24	Modbus RTU	120	No	N4503	S55150-A141	**SAV61.00/MO**

Combinable actuator for VVF22..

Operating voltage [V]	Positioning signal	Positioning time [s]	Spring return function	Data sheet	Stock no.	Product no.
AC/DC 24	3-position	120	No	N4503	S55150-A111	**SAV81.00**
AC 230	3-position	Open:30 Close:10	Yes (8 s)	N4561	BPZ:SKD32.21	**SKD32.21**
AC 230	3-position	120	No	N4561	BPZ:SKD32.50	**SKD32.50**
AC 230	3-position	120	Yes (8 s)	N4561	BPZ:SKD32.51	**SKD32.51**
AC 24	DC 0...10 V DC 4...20 mA 0...1000 Ohm	Open:30 Close:15	No	N4561	BPZ:SKD60	**SKD60**
AC 24	DC 0...10 V DC 4...20 mA 0...1000 Ohm	Open:30 Close:15	Yes (15 s)	N4561	BPZ:SKD62	**SKD62**
AC 24	Modbus RTU	Open 30 Close 15	Yes	N4561	S55195-A129	**SKD62/MO**
AC 24 24	DC 0...10 V DC 4...20 mA 0...1000 Ohm	Open:30 Close:15	Yes (15 s)	N4561	BPZ:SKD62UA	**SKD62UA**
AC 24	3-position	120	No	N4561	BPZ:SKD82.50	**SKD82.50**
AC 24	3-position	120	Yes (8 s)	N4561	BPZ:SKD82.51	**SKD82.51**
AC 230	3-position	120	No	N4564	BPZ:SKB32.50	**SKB32.50**
AC 230	3-position	120	Yes (10 s)	N4564	BPZ:SKB32.51	**SKB32.51**
AC 24	DC 0...10 V 4...20 mA 0...1000 Ohm	Open:120 Close:10	No	N4564	BPZ:SKB60	**SKB60**
AC 24	DC 0...10 V 4...20 mA 0...1000 Ohm	Open:120 Close:10	Yes (10 s)	N4564	BPZ:SKB62	**SKB62**
AC 24	Modbus RTU	Open 120 Close 10	Yes	N4564	S55195-A127	**SKB62/MO**
AC 24 24	DC 0...10 V 4...20 mA 0...1000 Ohm	Open:120 Close:10	Yes (10 s)	N4564	BPZ:SKB62UA	**SKB62UA**
AC 24	3-position	120	No	N4564	BPZ:SKB82.50	**SKB82.50**
AC 24	3-position	120	Yes (10 s)	N4564	BPZ:SKB82.51	**SKB82.51**
AC 230	3-position	120	No	N4566	BPZ:SKC32.60	**SKC32.60**
AC 230	3-position	120	Yes (18 s)	N4566	BPZ:SKC32.61	**SKC32.61**
AC 24	DC 0...10 V 4...20 mA 0...1000 Ohm	Open:120 Close:20	No	N4566	BPZ:SKC60	**SKC60**
AC 24	DC 0...10 V 4...20 mA 0...1000 Ohm	Open:120 Close:20	Yes (20 s)	N4566	BPZ:SKC62	**SKC62**
AC 24	Modbus RTU	Open 120 Close 20	Yes	N4566	S55195-A128	**SKC62/MO**
AC 24 24	DC 0...10 V 4...20 mA 0...1000 Ohm	Open:120 Close:20	Yes (20 s)	N4566	BPZ:SKC62UA	**SKC62UA**
AC 24	3-position	120	No	N4566	BPZ:SKC82.60	**SKC82.60**
AC 24	3-position	120	Yes (18 s)	N4566	BPZ:SKC82.61	**SKC82.61**

Globe and pressure independent control valve (PICV)
2-port flanged valves

VVF32..

2-port valves with flanged connections, PN 10

- With flanged connections to ISO 7005
- For chilled, low and high temperature water and brine in closed circuits

Data sheet	N4402
Stroke	to DN80: 20 mm from DN100: 40 mm
Leakage rate	0...0.02% of the kvs value
Medium temperature	-10...150 °C
Valve characteristic	Equal percentage k_{vs} 250/400 linear
Rangeability	DN 15 .. 25: >50 DN 40...150: >100
Permissible operating pressure	1000 kPa
Material, valve body	Cast iron EN-GJL-250
Material, inside set	≤ DN40: CrNi steel / brass ≥ DN50: CrNi steel / bronze
PN class	PN 10
Warranty	60 Months

Range overview VVF32..

SAX.. Δp_{max} [kPa]	SAX.. Δp_s [kPa]	SAV.. Δp_{max} [kPa]	SAV.. Δp_s [kPa]	SKD.. Δp_{max} [kPa]	SKD.. Δp_s [kPa]	SKB.. Δp_{max} [kPa]	SKB.. Δp_s [kPa]	SKC.. Δp_{max} [kPa]	SKC.. Δp_s [kPa]	DN	k_{vs} [m³/h]	Stock no.	Product no.
400	1000			400	1000	400	1000			15	1.6	S55202-V100	**VVF32.15-1.6**
400	1000			400	1000	400	1000			15	2.5	S55202-V101	**VVF32.15-2.5**
400	1000			400	1000	400	1000			15	4	S55202-V102	**VVF32.15-4**
400	1000			400	1000	400	1000			25	6.3	S55202-V103	**VVF32.25-6.3**
400	1000			400	1000	400	1000			25	10	S55202-V104	**VVF32.25-10**
400	550	400	1000	400	750	400	1000			40	16	S55202-V105	**VVF32.40-16**
400	550	400	1000	400	750	400	1000			40	25	S55202-V106	**VVF32.40-25**
300	350	400	750	400	450	400	1000			50	40	S55202-V107	**VVF32.50-40**
150	200	400	450	200	250	400	700			65	63	S55202-V108	**VVF32.65-63**
75	125	225	250	125	175	400	450			80	100	S55202-V109	**VVF32.80-100**
		125	160					250	300	100	160	S55202-V110	**VVF32.100-160**
		90	125					160	190	125	250	S55202-V111	**VVF32.125-250**
		60	80					100	125	150	400	S55202-V112	**VVF32.150-400**

For media < 0° C, stem heating element ASZ 6.6 is required.

8

Replacement sealing glands for VVF32..

Product Title	Data sheet	Stock no.	Product no.
Sealing gland complete, stem diameter 10 mm, sealing material EPDM		BPZ:428488060	**428488060**
Sealing gland complete, stem diameter 14 mm, sealing material EPDM, up to 150 °C		BPZ:467956290	**467956290**

Combinable actuator for VVF32..

Operating voltage [V]	Positioning signal	Positioning time [s]	Spring return function	Data sheet	Stock no.	Product no.
AC 230	3-position	120	no	N4501	S55150-A105	**SAX31.00**
AC 230	3-position	30	no	N4501	S55150-A106	**SAX31.03**
AC/DC 24	DC 0...10 V DC 4...20 mA 0...1000 Ohm	30	no	N4501	S55150-A100	**SAX61.03**
AC/DC 24	Modbus RTU	30	No	N4501	S55150-A140	**SAX61.03/MO**
AC/DC 24	3-position	120	no	N4501	S55150-A102	**SAX81.00**
AC/DC 24	3-position	30	no	N4501	S55150-A103	**SAX81.03**
AC 230	3-position	120	No	N4503	S55150-A112	**SAV31.00**

Combinable actuator for VVF32..

Operating voltage [V]	Positioning signal	Positioning time [s]	Spring return function	Data sheet	Stock no.	Product no.
AC/DC 24	DC 0...10 V DC 4...20 mA 0...1000 Ohm	120	No	N4503	S55150-A110	**SAV61.00**
AC/DC 24	Modbus RTU	120	No	N4503	S55150-A141	**SAV61.00/MO**
AC/DC 24	3-position	120	No	N4503	S55150-A111	**SAV81.00**
AC 230	3-position	Open:30 Close:10	Yes (8 s)	N4561	BPZ:SKD32.21	**SKD32.21**
AC 230	3-position	120	No	N4561	BPZ:SKD32.50	**SKD32.50**
AC 230	3-position	120	Yes (8 s)	N4561	BPZ:SKD32.51	**SKD32.51**
AC 24	DC 0...10 V DC 4...20 mA 0...1000 Ohm	Open:30 Close:15	No	N4561	BPZ:SKD60	**SKD60**
AC 24	DC 0...10 V DC 4...20 mA 0...1000 Ohm	Open:30 Close:15	Yes (15 s)	N4561	BPZ:SKD62	**SKD62**
AC 24	Modbus RTU	Open 30 Close 15	Yes	N4561	S55195-A129	**SKD62/MO**
AC 24 24	DC 0...10 V DC 4...20 mA 0...1000 Ohm	Open:30 Close:15	Yes (15 s)	N4561	BPZ:SKD62UA	**SKD62UA**
AC 24	3-position	120	No	N4561	BPZ:SKD82.50	**SKD82.50**
AC 24	3-position	120	Yes (8 s)	N4561	BPZ:SKD82.51	**SKD82.51**
AC 230	3-position	120	No	N4564	BPZ:SKB32.50	**SKB32.50**
AC 230	3-position	120	Yes (10 s)	N4564	BPZ:SKB32.51	**SKB32.51**
AC 24	DC 0...10 V 4...20 mA 0...1000 Ohm	Open:120 Close:10	No	N4564	BPZ:SKB60	**SKB60**
AC 24	DC 0...10 V 4...20 mA 0...1000 Ohm	Open:120 Close:10	Yes (10 s)	N4564	BPZ:SKB62	**SKB62**
AC 24	Modbus RTU	Open 120 Close 10	Yes	N4564	S55195-A127	**SKB62/MO**
AC 24 24	DC 0...10 V 4...20 mA 0...1000 Ohm	Open:120 Close:10	Yes (10 s)	N4564	BPZ:SKB62UA	**SKB62UA**
AC 24	3-position	120	No	N4564	BPZ:SKB82.50	**SKB82.50**
AC 24	3-position	120	Yes (10 s)	N4564	BPZ:SKB82.51	**SKB82.51**
AC 230	3-position	120	No	N4566	BPZ:SKC32.60	**SKC32.60**
AC 230	3-position	120	Yes (18 s)	N4566	BPZ:SKC32.61	**SKC32.61**
AC 24	DC 0...10 V 4...20 mA 0...1000 Ohm	Open:120 Close:20	No	N4566	BPZ:SKC60	**SKC60**
AC 24	DC 0...10 V 4...20 mA 0...1000 Ohm	Open:120 Close:20	Yes (20 s)	N4566	BPZ:SKC62	**SKC62**
AC 24	Modbus RTU	Open 120 Close 20	Yes	N4566	S55195-A128	**SKC62/MO**
AC 24 24	DC 0...10 V 4...20 mA 0...1000 Ohm	Open:120 Close:20	Yes (20 s)	N4566	BPZ:SKC62UA	**SKC62UA**
AC 24	3-position	120	No	N4566	BPZ:SKC82.60	**SKC82.60**
AC 24	3-position	120	Yes (18 s)	N4566	BPZ:SKC82.61	**SKC82.61**

Globe and pressure independent control valve (PICV)
2-port flanged valves

VVF42..

2-port valves with flanged connections, PN 16

- With flanged connections to ISO 7005
- For chilled, low and high temperature water and brine in closed circuits

Data sheet	N4403
Stroke	to DN80: 20 mm from DN100: 40 mm
Leakage rate	0...0.02% of the kvs value
Medium temperature	-10...150 °C
Valve characteristic	Equal percentage k_{vs} 250/400 linear
Rangeability	DN 15...25: >50 DN 32...150: >100
Permissible operating pressure	1600 kPa
Material, valve body	Cast iron EN-GJL-250
Material, inside set	≤ DN40: CrNi steel / brass ≥ DN50: CrNi steel / bronze
PN class	PN 16
Warranty	60 Months

Range overview VVF42..

SAX.. Δp_{max} [kPa]	SAX.. Δp_s [kPa]	SAV.. Δp_{max} [kPa]	SAV.. Δp_s [kPa]	SKD.. Δp_{max} [kPa]	SKD.. Δp_s [kPa]	SKB.. Δp_{max} [kPa]	SKB.. Δp_s [kPa]	SKC.. Δp_{max} [kPa]	SKC.. Δp_s [kPa]	DN	k_{vs} [m³/h]	Stock no.	Product no.
400	1600			400	1600	400	1600			15	1.6	S55204-V100	**VVF42.15-1.6**
400	1600			400	1600	400	1600			15	2.5	S55204-V101	**VVF42.15-2.5**
400	1600			400	1600	400	1600			15	4	S55204-V102	**VVF42.15-4**
400	1600			400	1600	400	1600			20	6.3	S55204-V103	**VVF42.20-6.3**
400	1600			400	1600	400	1600			25	6.3	S55204-V104	**VVF42.25-6.3**
400	1600			400	1600	400	1600			25	10	S55204-V105	**VVF42.25-10**
400	900			400	1200	400	1600			32	16	S55204-V106	**VVF42.32-16**
400	550	400	1250	400	750	400	1600			40	16	S55204-V107	**VVF42.40-16**
400	550	400	1250	400	750	400	1600			40	25	S55204-V108	**VVF42.40-25**
300	350	400	750	400	450	400	1200			50	31.5	S55204-V109	**VVF42.50-31.5**
300	350	400	750	400	450	400	1200			50	40	S55204-V110	**VVF42.50-40**
150	200	400	450	200	250	400	700			65	50	S55204-V111	**VVF42.65-50**
150	200	400	450	200	250	400	700			65	63	S55204-V112	**VVF42.65-63**
75	125	225	250	125	175	400	450			80	80	S55204-V113	**VVF42.80-80**
75	125	225	250	125	175	400	450			80	100	S55204-V114	**VVF42.80-100**
		125	160					250	300	100	125	S55204-V115	**VVF42.100-125**
		125	160					250	300	100	160	S55204-V116	**VVF42.100-160**
		90	125					160	190	125	200	S55204-V117	**VVF42.125-200**
		90	125					160	190	125	250	S55204-V118	**VVF42.125-250**
		60	80					100	125	150	315	S55204-V119	**VVF42.150-315**
		60	80					100	125	150	400	S55204-V120	**VVF42.150-400**

For media < 0° C, stem heating element ASZ 6.6 is required.

Replacement sealing glands for VVF42..

Product Title	Data sheet	Stock no.	Product no.
Sealing gland complete, stem diameter 10 mm, sealing material EPDM		BPZ:428488060	**428488060**
Sealing gland complete, stem diameter 14 mm, sealing material EPDM, up to 150 °C		BPZ:467956290	**467956290**

Combinable actuator for VVF42..

Operating voltage [V]	Positioning signal	Positioning time [s]	Spring return function	Data sheet	Stock no.	Product no.
AC 230	3-position	120	no	N4501	S55150-A105	**SAX31.00**
AC 230	3-position	30	no	N4501	S55150-A106	**SAX31.03**
AC/DC 24	DC 0...10 V DC 4...20 mA 0...1000 Ohm	30	no	N4501	S55150-A100	**SAX61.03**
AC/DC 24	Modbus RTU	30	No	N4501	S55150-A140	**SAX61.03/MO**
AC/DC 24	3-position	120	no	N4501	S55150-A102	**SAX81.00**
AC/DC 24	3-position	30	no	N4501	S55150-A103	**SAX81.03**
AC 230	3-position	120	No	N4503	S55150-A112	**SAV31.00**
AC/DC 24	DC 0...10 V DC 4...20 mA 0...1000 Ohm	120	No	N4503	S55150-A110	**SAV61.00**
AC/DC 24	Modbus RTU	120	No	N4503	S55150-A141	**SAV61.00/MO**
AC/DC 24	3-position	120	No	N4503	S55150-A111	**SAV81.00**
AC 230	3-position	Open:30 Close:10	Yes (8 s)	N4561	BPZ:SKD32.21	**SKD32.21**
AC 230	3-position	120	No	N4561	BPZ:SKD32.50	**SKD32.50**
AC 230	3-position	120	Yes (8 s)	N4561	BPZ:SKD32.51	**SKD32.51**
AC 24	DC 0...10 V DC 4...20 mA 0...1000 Ohm	Open:30 Close:15	No	N4561	BPZ:SKD60	**SKD60**
AC 24	DC 0...10 V DC 4...20 mA 0...1000 Ohm	Open:30 Close:15	Yes (15 s)	N4561	BPZ:SKD62	**SKD62**
AC 24	Modbus RTU	Open 30 Close 15	Yes	N4561	S55195-A129	**SKD62/MO**
AC 24 24	DC 0...10 V DC 4...20 mA 0...1000 Ohm	Open:30 Close:15	Yes (15 s)	N4561	BPZ:SKD62UA	**SKD62UA**
AC 24	3-position	120	No	N4561	BPZ:SKD82.50	**SKD82.50**
AC 24	3-position	120	Yes (8 s)	N4561	BPZ:SKD82.51	**SKD82.51**
AC 230	3-position	120	No	N4564	BPZ:SKB32.50	**SKB32.50**
AC 230	3-position	120	Yes (10 s)	N4564	BPZ:SKB32.51	**SKB32.51**
AC 24	DC 0...10 V 4...20 mA 0...1000 Ohm	Open:120 Close:10	No	N4564	BPZ:SKB60	**SKB60**
AC 24	DC 0...10 V 4...20 mA 0...1000 Ohm	Open:120 Close:10	Yes (10 s)	N4564	BPZ:SKB62	**SKB62**
AC 24	Modbus RTU	Open 120 Close 10	Yes	N4564	S55195-A127	**SKB62/MO**
AC 24 24	DC 0...10 V 4...20 mA 0...1000 Ohm	Open:120 Close:10	Yes (10 s)	N4564	BPZ:SKB62UA	**SKB62UA**
AC 24	3-position	120	No	N4564	BPZ:SKB82.50	**SKB82.50**
AC 24	3-position	120	Yes (10 s)	N4564	BPZ:SKB82.51	**SKB82.51**
AC 230	3-position	120	No	N4566	BPZ:SKC32.60	**SKC32.60**
AC 230	3-position	120	Yes (18 s)	N4566	BPZ:SKC32.61	**SKC32.61**
AC 24	DC 0...10 V 4...20 mA 0...1000 Ohm	Open:120 Close:20	No	N4566	BPZ:SKC60	**SKC60**
AC 24	DC 0...10 V 4...20 mA 0...1000 Ohm	Open:120 Close:20	Yes (20 s)	N4566	BPZ:SKC62	**SKC62**

Combinable actuator for VVF42..

Operating voltage [V]	Positioning signal	Positioning time [s]	Spring return function	Data sheet	Stock no.	Product no.
AC 24	Modbus RTU	Open 120 Close 20	Yes	N4566	S55195-A128	**SKC62/MO**
AC 24 24	DC 0...10 V 4...20 mA 0...1000 Ohm	Open:120 Close:20	Yes (20 s)	N4566	BPZ:SKC62UA	**SKC62UA**
AC 24	3-position	120	No	N4566	BPZ:SKC82.60	**SKC82.60**
AC 24	3-position	120	Yes (18 s)	N4566	BPZ:SKC82.61	**SKC82.61**

2-port valves with flanged connections, PN 16

VVF42..C

- With flanged connections to ISO 7005
- For chilled, low and high temperature water and brine in closed circuits

Data sheet	A6V10794157
Stroke	to DN 80: 20 mm from DN 100: 40 mm
Leakage rate	0...0.02% of the kvs value
Medium temperature	-10...150 °C
Valve characteristic	Equal percentage k_{vs} 250/400 linear
Rangeability	to DN 40: >50 from DN 50: >100
Permissible operating pressure	1600 kPa
Material, valve body	Cast iron EN-GJL-250
Material, inside set	≤ DN 25: CrNi steel / brass ≥ DN 32: CrNi steel / CrNi steel
PN class	PN 16
Warranty	60 Months

Range overview VVF42..C

For customers in Asia / Australia

SAX.. Δp_{max} [kPa]	SAX.. Δp_s [kPa]	SAV.. Δp_{max} [kPa]	SAV.. Δp_s [kPa]	SKD.. Δp_{max} [kPa]	SKD.. Δp_s [kPa]	SKB.. Δp_{max} [kPa]	SKB.. Δp_s [kPa]	SKC.. Δp_{max} [kPa]	SKC.. Δp_s [kPa]	DN	k_{vs} [m³/h]	Stock no.	Product no.
400	1600			400	1600	400	1600			25	6.3	S55204-V148	**VVF42.25-6.3C**
400	1600			400	1600	400	1600			25	10	S55204-V149	**VVF42.25-10C**
400	900			400	1200	400	1600			32	16	S55204-V150	**VVF42.32-16C**
400	550	400	1250	400	750	400	1600			40	16	S55204-V151	**VVF42.40-16C**
400	550	400	1250	400	750	400	1600			40	25	S55204-V152	**VVF42.40-25C**
300	350	400	750	400	450	400	1200			50	31.5	S55204-V153	**VVF42.50-31.5C**
300	350	400	750	400	450	400	1200			50	40	S55204-V154	**VVF42.50-40C**
150	200	400	450	200	250	400	700			65	50	S55204-V155	**VVF42.65-50C**
150	200	400	450	200	250	400	700			65	63	S55204-V156	**VVF42.65-63C**
75	125	225	250	125	175	400	450			80	80	S55204-V157	**VVF42.80-80C**
75	125	225	250	125	175	400	450			80	100	S55204-V158	**VVF42.80-100C**
		125	160					250	300	100	125	S55204-V159	**VVF42.100-125C**
		125	160					250	300	100	160	S55204-V160	**VVF42.100-160C**
		90	125					160	190	125	200	S55204-V161	**VVF42.125-200C**
		90	125					160	190	125	250	S55204-V162	**VVF42.125-250C**
		60	80					100	125	150	315	S55204-V163	**VVF42.150-315C**
		60	80					100	125	150	400	S55204-V164	**VVF42.150-400C**

Replacement sealing glands for VVF42..C

Product Title	Data sheet	Stock no.	Product no.
Sealing gland complete, stem diameter 10 mm, sealing material EPDM		BPZ:428488060	**428488060**
Sealing gland complete, stem diameter 14 mm, sealing material EPDM, up to 150 °C		BPZ:467956290	**467956290**

Combinable actuator for VVF42..C

Operating voltage [V]	Positioning signal	Positioning time [s]	Spring return function	Data sheet	Stock no.	Product no.
AC 230	3-position	120	no	N4501	S55150-A105	**SAX31.00**
AC 230	3-position	30	no	N4501	S55150-A106	**SAX31.03**
AC/DC 24	DC 0...10 V DC 4...20 mA 0...1000 Ohm	30	no	N4501	S55150-A100	**SAX61.03**

Combinable actuator for VVF42..C

Operating voltage [V]	Positioning signal	Positioning time [s]	Spring return function	Data sheet	Stock no.	Product no.
AC/DC 24	Modbus RTU	30	No	N4501	S55150-A140	**SAX61.03/MO**
AC/DC 24	3-position	120	no	N4501	S55150-A102	**SAX81.00**
AC/DC 24	3-position	30	no	N4501	S55150-A103	**SAX81.03**
AC 230	3-position	120	No	N4503	S55150-A112	**SAV31.00**
AC/DC 24	DC 0...10 V DC 4...20 mA 0...1000 Ohm	120	No	N4503	S55150-A110	**SAV61.00**
AC/DC 24	Modbus RTU	120	No	N4503	S55150-A141	**SAV61.00/MO**
AC/DC 24	3-position	120	No	N4503	S55150-A111	**SAV81.00**
AC 230	3-position	Open:30 Close:10	Yes (8 s)	N4561	BPZ:SKD32.21	**SKD32.21**
AC 230	3-position	120	No	N4561	BPZ:SKD32.50	**SKD32.50**
AC 230	3-position	120	Yes (8 s)	N4561	BPZ:SKD32.51	**SKD32.51**
AC 24	DC 0...10 V DC 4...20 mA 0...1000 Ohm	Open:30 Close:15	No	N4561	BPZ:SKD60	**SKD60**
AC 24	DC 0...10 V DC 4...20 mA 0...1000 Ohm	Open:30 Close:15	Yes (15 s)	N4561	BPZ:SKD62	**SKD62**
AC 24	Modbus RTU	Open 30 Close 15	Yes	N4561	S55195-A129	**SKD62/MO**
AC 24 24	DC 0...10 V DC 4...20 mA 0...1000 Ohm	Open:30 Close:15	Yes (15 s)	N4561	BPZ:SKD62UA	**SKD62UA**
AC 24	3-position	120	No	N4561	BPZ:SKD82.50	**SKD82.50**
AC 24	3-position	120	Yes (8 s)	N4561	BPZ:SKD82.51	**SKD82.51**
AC 230	3-position	120	No	N4564	BPZ:SKB32.50	**SKB32.50**
AC 230	3-position	120	Yes (10 s)	N4564	BPZ:SKB32.51	**SKB32.51**
AC 24	DC 0...10 V 4...20 mA 0...1000 Ohm	Open:120 Close:10	No	N4564	BPZ:SKB60	**SKB60**
AC 24	DC 0...10 V 4...20 mA 0...1000 Ohm	Open:120 Close:10	Yes (10 s)	N4564	BPZ:SKB62	**SKB62**
AC 24	Modbus RTU	Open 120 Close 10	Yes	N4564	S55195-A127	**SKB62/MO**
AC 24 24	DC 0...10 V 4...20 mA 0...1000 Ohm	Open:120 Close:10	Yes (10 s)	N4564	BPZ:SKB62UA	**SKB62UA**
AC 24	3-position	120	No	N4564	BPZ:SKB82.50	**SKB82.50**
AC 24	3-position	120	Yes (10 s)	N4564	BPZ:SKB82.51	**SKB82.51**
AC 230	3-position	120	No	N4566	BPZ:SKC32.60	**SKC32.60**
AC 230	3-position	120	Yes (18 s)	N4566	BPZ:SKC32.61	**SKC32.61**
AC 24	DC 0...10 V 4...20 mA 0...1000 Ohm	Open:120 Close:20	No	N4566	BPZ:SKC60	**SKC60**
AC 24	DC 0...10 V 4...20 mA 0...1000 Ohm	Open:120 Close:20	Yes (20 s)	N4566	BPZ:SKC62	**SKC62**
AC 24	Modbus RTU	Open 120 Close 20	Yes	N4566	S55195-A128	**SKC62/MO**

Combinable actuator for VVF42..C

Operating voltage [V]	Positioning signal	Positioning time [s]	Spring return function	Data sheet	Stock no.	Product no.
AC 24 24	DC 0...10 V 4...20 mA 0...1000 Ohm	Open:120 Close:20	Yes (20 s)	N4566	BPZ:SKC62UA	**SKC62UA**
AC 24	3-position	120	No	N4566	BPZ:SKC82.60	**SKC82.60**
AC 24	3-position	120	Yes (18 s)	N4566	BPZ:SKC82.61	**SKC82.61**

Globe and pressure independent control valve (PICV)
2-port flanged valves

VVF42..K

2-port valves pressure compensated with flanged connections, PN 16

- With flanged connections to ISO 7005
- For chilled, low and high temperature water and brine in closed circuits

Data sheet	N4403
Stroke	to DN80: 20 mm from DN100: 40 mm
Leakage rate	0...0.02% of the kvs value
Medium temperature	-5...150 °C
Valve characteristic	Equal percentage k_{vs} 250/360 linear
Rangeability	>100
Permissible operating pressure	1600 kPa
Material, valve body	Cast iron EN-GJL-250
Material, inside set	≥ DN 50: CrNi steel / bronze
PN class	PN 16
Warranty	60 Months

Range overview VVF42..K

SAX.. Δp_{max} [kPa]	SAX.. Δp_s [kPa]	SAV.. Δp_{max} [kPa]	SAV.. Δp_s [kPa]	SKD.. Δp_{max} [kPa]	SKD.. Δp_s [kPa]	SKB.. Δp_{max} [kPa]	SKB.. Δp_s [kPa]	SKC.. Δp_{max} [kPa]	SKC.. Δp_s [kPa]	DN	k_{vs} [m³/h]	Stock no.	Product no.
400	1600	400	1600	400	1600	400	1600			50	40	S55204-V121	**VVF42.50-40K**
400	1600	400	1600	400	1600	400	1600			65	63	S55204-V122	**VVF42.65-63K**
400	1600	400	1600	400	1600	400	1600			80	100	S55204-V123	**VVF42.80-100K**
		400	1600					400	1600	100	160	S55204-V124	**VVF42.100-160K**
		400	1600					400	1600	125	250	S55204-V125	**VVF42.125-250K**
		400	1400					400	1600	150	360	S55204-V126	**VVF42.150-360K**

For media < 0° C, stem heating element ASZ6.6 is required.

Replacement sealing glands for VVF42..K

Product Title	Data sheet	Stock no.	Product no.
Sealing gland complete, stem diameter 10 mm, sealing material EPDM		BPZ:428488060	**428488060**

Combinable actuator for VVF42..K

Operating voltage [V]	Positioning signal	Positioning time [s]	Spring return function	Data sheet	Stock no.	Product no.
AC 230	3-position	120	no	N4501	S55150-A105	**SAX31.00**
AC 230	3-position	30	no	N4501	S55150-A106	**SAX31.03**
AC/DC 24	DC 0...10 V DC 4...20 mA 0...1000 Ohm	30	no	N4501	S55150-A100	**SAX61.03**
AC/DC 24	Modbus RTU	30	No	N4501	S55150-A140	**SAX61.03/MO**
AC/DC 24	3-position	120	no	N4501	S55150-A102	**SAX81.00**
AC/DC 24	3-position	30	no	N4501	S55150-A103	**SAX81.03**
AC 230	3-position	120	No	N4503	S55150-A112	**SAV31.00**
AC/DC 24	DC 0...10 V DC 4...20 mA 0...1000 Ohm	120	No	N4503	S55150-A110	**SAV61.00**
AC/DC 24	Modbus RTU	120	No	N4503	S55150-A141	**SAV61.00/MO**
AC/DC 24	3-position	120	No	N4503	S55150-A111	**SAV81.00**
AC 230	3-position	Open:30 Close:10	Yes (8 s)	N4561	BPZ:SKD32.21	**SKD32.21**
AC 230	3-position	120	No	N4561	BPZ:SKD32.50	**SKD32.50**
AC 230	3-position	120	Yes (8 s)	N4561	BPZ:SKD32.51	**SKD32.51**

Combinable actuator for VVF42..K

Operating voltage [V]	Positioning signal	Positioning time [s]	Spring return function	Data sheet	Stock no.	Product no.
AC 24	DC 0...10 V DC 4...20 mA 0...1000 Ohm	Open:30 Close:15	No	N4561	BPZ:SKD60	**SKD60**
AC 24	DC 0...10 V DC 4...20 mA 0...1000 Ohm	Open:30 Close:15	Yes (15 s)	N4561	BPZ:SKD62	**SKD62**
AC 24	Modbus RTU	Open 30 Close 15	Yes	N4561	S55195-A129	**SKD62/MO**
AC 24 24	DC 0...10 V DC 4...20 mA 0...1000 Ohm	Open:30 Close:15	Yes (15 s)	N4561	BPZ:SKD62UA	**SKD62UA**
AC 24	3-position	120	No	N4561	BPZ:SKD82.50	**SKD82.50**
AC 24	3-position	120	Yes (8 s)	N4561	BPZ:SKD82.51	**SKD82.51**
AC 230	3-position	120	No	N4564	BPZ:SKB32.50	**SKB32.50**
AC 230	3-position	120	Yes (10 s)	N4564	BPZ:SKB32.51	**SKB32.51**
AC 24	DC 0...10 V 4...20 mA 0...1000 Ohm	Open:120 Close:10	No	N4564	BPZ:SKB60	**SKB60**
AC 24	DC 0...10 V 4...20 mA 0...1000 Ohm	Open:120 Close:10	Yes (10 s)	N4564	BPZ:SKB62	**SKB62**
AC 24	Modbus RTU	Open 120 Close 10	Yes	N4564	S55195-A127	**SKB62/MO**
AC 24 24	DC 0...10 V 4...20 mA 0...1000 Ohm	Open:120 Close:10	Yes (10 s)	N4564	BPZ:SKB62UA	**SKB62UA**
AC 24	3-position	120	No	N4564	BPZ:SKB82.50	**SKB82.50**
AC 24	3-position	120	Yes (10 s)	N4564	BPZ:SKB82.51	**SKB82.51**
AC 230	3-position	120	No	N4566	BPZ:SKC32.60	**SKC32.60**
AC 230	3-position	120	Yes (18 s)	N4566	BPZ:SKC32.61	**SKC32.61**
AC 24	DC 0...10 V 4...20 mA 0...1000 Ohm	Open:120 Close:20	No	N4566	BPZ:SKC60	**SKC60**
AC 24	DC 0...10 V 4...20 mA 0...1000 Ohm	Open:120 Close:20	Yes (20 s)	N4566	BPZ:SKC62	**SKC62**
AC 24	Modbus RTU	Open 120 Close 20	Yes	N4566	S55195-A128	**SKC62/MO**
AC 24 24	DC 0...10 V 4...20 mA 0...1000 Ohm	Open:120 Close:20	Yes (20 s)	N4566	BPZ:SKC62UA	**SKC62UA**
AC 24	3-position	120	No	N4566	BPZ:SKC82.60	**SKC82.60**
AC 24	3-position	120	Yes (18 s)	N4566	BPZ:SKC82.61	**SKC82.61**

Globe and pressure independent control valve (PICV)
2-port flanged valves

VVF42..KC

2-port valves pressure compensated with flanged connections, PN 16

- With flanged connections to ISO 7005
- For chilled, low and high temperature water and brine in closed circuits

Data sheet	A6V10794157
Stroke	to DN80: 20 mm from DN100: 40 mm
Leakage rate	0...0.02% of the kvs value
Medium temperature	-10...150 °C
Valve characteristic	Equal percentage
Rangeability	>100
Permissible operating pressure	1600 kPa
Material, valve body	Cast iron EN-GJL-250
Material, inside set	CrNi steel / CrNi Steel
PN class	PN 16
Warranty	60 Months

Range overview VVF42..KC

For customers in Asia / Australia

SAX.. Δp_{max} [kPa]	SAX.. Δp_s [kPa]	SAV.. Δp_{max} [kPa]	SAV.. Δp_s [kPa]	SKD.. Δp_{max} [kPa]	SKD.. Δp_s [kPa]	SKB.. Δp_{max} [kPa]	SKB.. Δp_s [kPa]	SKC.. Δp_{max} [kPa]	SKC.. Δp_s [kPa]	DN	k_{vs} [m³/h]	Stock no.	Product no.
800	1600			800	1600	800	1600			65	63	S55204-V182	**VVF42.65KC**
800	1600			800	1600	800	1600			80	100	S55204-V183	**VVF42.80KC**
		500	1600					800	1600	100	160	S55204-V184	**VVF42.100KC**
		500	1600					800	1600	125	220	S55204-V185	**VVF42.125KC**
		500	1400					800	1600	150	315	S55204-V186	**VVF42.150KC**

Replacement sealing glands for VVF42..KC

Product Title	Data sheet	Stock no.	Product no.
Sealing gland complete, stem diameter 10 mm, sealing material EPDM		BPZ:428488060	**428488060**
Sealing gland complete, stem diameter 14 mm, sealing material EPDM, up to 150 °C		BPZ:467956290	**467956290**

Combinable actuator for VVF42..KC

Operating voltage [V]	Positioning signal	Positioning time [s]	Spring return function	Data sheet	Stock no.	Product no.
AC 230	3-position	120	no	N4501	S55150-A105	**SAX31.00**
AC 230	3-position	30	no	N4501	S55150-A106	**SAX31.03**
AC/DC 24	DC 0...10 V DC 4...20 mA 0...1000 Ohm	30	no	N4501	S55150-A100	**SAX61.03**
AC/DC 24	Modbus RTU	30	No	N4501	S55150-A140	**SAX61.03/MO**
AC/DC 24	3-position	120	no	N4501	S55150-A102	**SAX81.00**
AC/DC 24	3-position	30	no	N4501	S55150-A103	**SAX81.03**
AC 230	3-position	Open:30 Close:10	Yes (8 s)	N4561	BPZ:SKD32.21	**SKD32.21**
AC 230	3-position	120	No	N4561	BPZ:SKD32.50	**SKD32.50**
AC 230	3-position	120	Yes (8 s)	N4561	BPZ:SKD32.51	**SKD32.51**
AC 24	DC 0...10 V DC 4...20 mA 0...1000 Ohm	Open:30 Close:15	No	N4561	BPZ:SKD60	**SKD60**
AC 24	DC 0...10 V DC 4...20 mA 0...1000 Ohm	Open:30 Close:15	Yes (15 s)	N4561	BPZ:SKD62	**SKD62**
AC 24	Modbus RTU	Open 30 Close 15	Yes	N4561	S55195-A129	**SKD62/MO**

Combinable actuator for VVF42..KC

Operating voltage [V]	Positioning signal	Positioning time [s]	Spring return function	Data sheet	Stock no.	Product no.
AC 24 24	DC 0...10 V DC 4...20 mA 0...1000 Ohm	Open:30 Close:15	Yes (15 s)	N4561	BPZ:SKD62UA	**SKD62UA**
AC 24	3-position	120	No	N4561	BPZ:SKD82.50	**SKD82.50**
AC 24	3-position	120	Yes (8 s)	N4561	BPZ:SKD82.51	**SKD82.51**
AC 230	3-position	120	No	N4564	BPZ:SKB32.50	**SKB32.50**
AC 230	3-position	120	Yes (10 s)	N4564	BPZ:SKB32.51	**SKB32.51**
AC 24	DC 0...10 V 4...20 mA 0...1000 Ohm	Open:120 Close:10	No	N4564	BPZ:SKB60	**SKB60**
AC 24	DC 0...10 V 4...20 mA 0...1000 Ohm	Open:120 Close:10	Yes (10 s)	N4564	BPZ:SKB62	**SKB62**
AC 24	Modbus RTU	Open 120 Close 10	Yes	N4564	S55195-A127	**SKB62/MO**
AC 24 24	DC 0...10 V 4...20 mA 0...1000 Ohm	Open:120 Close:10	Yes (10 s)	N4564	BPZ:SKB62UA	**SKB62UA**
AC 24	3-position	120	No	N4564	BPZ:SKB82.50	**SKB82.50**
AC 24	3-position	120	Yes (10 s)	N4564	BPZ:SKB82.51	**SKB82.51**
AC 230	3-position	120	No	N4566	BPZ:SKC32.60	**SKC32.60**
AC 230	3-position	120	Yes (18 s)	N4566	BPZ:SKC32.61	**SKC32.61**
AC 24	DC 0...10 V 4...20 mA 0...1000 Ohm	Open:120 Close:20	No	N4566	BPZ:SKC60	**SKC60**
AC 24	DC 0...10 V 4...20 mA 0...1000 Ohm	Open:120 Close:20	Yes (20 s)	N4566	BPZ:SKC62	**SKC62**
AC 24	Modbus RTU	Open 120 Close 20	Yes	N4566	S55195-A128	**SKC62/MO**
AC 24 24	DC 0...10 V 4...20 mA 0...1000 Ohm	Open:120 Close:20	Yes (20 s)	N4566	BPZ:SKC62UA	**SKC62UA**
AC 24	3-position	120	No	N4566	BPZ:SKC82.60	**SKC82.60**
AC 24	3-position	120	Yes (18 s)	N4566	BPZ:SKC82.61	**SKC82.61**

Globe and pressure independent control valve (PICV)
2-port flanged valves

2-port valve, flanged, pressure compensated

VVF52..KC

- With flanged connections to ISO 7005
- For chilled, low and high temperature water and brine in closed circuits

Data sheet	A6V14027860
Leakage rate	0...0.02% of the kvs value
Valve characteristic	0...30 %: Linear 30...100 %: Equal percentage
Rangeability	>100
Permissible operating pressure	2500 kPa
Material, inside set	Stainless steel

Range overview VVF52..KC

SKD.. Δp_{max} [kPa]	SKD.. Δp_s [kPa]	SKB.. Δp_{max} [kPa]	SKB.. Δp_s [kPa]	SKC.. Δp_{max} [kPa]	SKC.. Δp_s [kPa]	DN	k_{vs} [m³/h]	Stock no.	Product no.
				800	2500	100	160	S55204-V189	VVF52.100-160KC
				800	2500	125	200	S55204-V190	VVF52.125-200KC
				800	2500	150	315	S55204-V191	VVF52.150-315KC
800	2500	800	2500			65	63	S55204-V187	VVF52.65-63KC
800	2500	800	2500			80	100	S55204-V188	VVF52.80-100KC

2-port seat valve PN16 with flanged connections

VVF43..

- With flanged connections to ISO 7005
- For cooling, chilled, low and high temperature water, brine, heat transfer oils, saturated steam and superheated steam in open and closed circuits

Data sheet	N4404
Stroke	40 mm
Leakage rate	0...0.01 % of k_{vs} value
Medium temperature	-20...220 °C
Valve characteristic	Equal percentage k_{vs} 250/400 linear
Rangeability	>100
Permissible operating pressure	1600 kPa
Material, valve body	Cast iron EN-GJS-400-18-LT
Material, inside set	Stainless steel
PN class	PN 16
Absolute pressure p1 steam	1600 kPa abs
Warranty	60 Months

Range overview VVF43..

SAV.. Δp_{max} [kPa]	SAV.. Δp_s [kPa]	SKC.. Δp_{max} [kPa]	SKC.. Δp_s [kPa]	DN	k_{vs} [m³/h]	Stock no.	Product no.
400	450	650	700	65	50	S55206-V100	**VVF43.65-50**
400	450	650	700	65	63	S55206-V101	**VVF43.65-63**
225	250	400	450	80	80	S55206-V102	**VVF43.80-80**
225	250	400	450	80	100	S55206-V103	**VVF43.80-100**
125	160	250	300	100	125	S55206-V104	**VVF43.100-125**
125	160	250	300	100	160	S55206-V105	**VVF43.100-160**
90	125	160	175	125	200	S55206-V106	**VVF43.125-200**
90	125	160	175	125	250	S55206-V107	**VVF43.125-250**
60	80	100	125	150	315	S55206-V108	**VVF43.150-315**
60	80	100	125	150	400	S55206-V109	**VVF43.150-400**

Replacement sealing glands for VVF43..

Product Title	Data sheet	Stock no.	Product no.
Sealing gland complete, stem diameter 10 mm, sealing material EPDM		BPZ:428488060	**428488060**
Stem connection washer for SKB/SKC actuators, stem diameter 10 mm, set of 5		BPZ:7424200000	**7424200000**
Replacement sealing gland, stem diameter 10 mm, sealing material FEPM		S55845-Z150	**7428400610**

Combinable actuator for VVF43..

Operating voltage [V]	Positioning signal	Positioning time [s]	Spring return function	Data sheet	Stock no.	Product no.
AC 230	3-position	120	No	N4503	S55150-A112	**SAV31.00**
AC/DC 24	DC 0...10 V DC 4...20 mA 0...1000 Ohm	120	No	N4503	S55150-A110	**SAV61.00**
AC/DC 24	Modbus RTU	120	No	N4503	S55150-A141	**SAV61.00/MO**
AC/DC 24	3-position	120	No	N4503	S55150-A111	**SAV81.00**
AC 230	3-position	120	No	N4566	BPZ:SKC32.60	**SKC32.60**
AC 230	3-position	120	Yes (18 s)	N4566	BPZ:SKC32.61	**SKC32.61**
AC 24	DC 0...10 V 4...20 mA 0...1000 Ohm	Open:120 Close:20	No	N4566	BPZ:SKC60	**SKC60**

Combinable actuator for VVF43..

Operating voltage [V]	Positioning signal	Positioning time [s]	Spring return function	Data sheet	Stock no.	Product no.
AC 24	DC 0...10 V 4...20 mA 0...1000 Ohm	Open:120 Close:20	Yes (20 s)	N4566	BPZ:SKC62	**SKC62**
AC 24	Modbus RTU	Open 120 Close 20	Yes	N4566	S55195-A128	**SKC62/MO**
AC 24 24	DC 0...10 V 4...20 mA 0...1000 Ohm	Open:120 Close:20	Yes (20 s)	N4566	BPZ:SKC62UA	**SKC62UA**
AC 24	3-position	120	No	N4566	BPZ:SKC82.60	**SKC82.60**
AC 24	3-position	120	Yes (18 s)	N4566	BPZ:SKC82.61	**SKC82.61**

2-port seat valve PN16 with flanged connections, pressure compensated

VVF43..K

- With flanged connections to ISO 7005
- For cooling, chilled, low and high temperature water, brine, heat transfer oils, saturated steam and superheated steam in open and closed circuits

Data sheet	N4404
Stroke	40 mm
Leakage rate	0...0.01 % of k_{vs} value
Medium temperature	-5...220 °C
Valve characteristic	Equal percentage k_{vs} 250/360 linear
Rangeability	>100
Permissible operating pressure	1600 kPa
Material, valve body	Cast iron EN-GJS-400-18-LT
Material, inside set	CrNi steel
PN class	PN 16
Absolute pressure p1 steam	1600 kPa abs
Warranty	60 Months

Range overview VVF43..K

SKC.. Δp_{max} [kPa]	SKC.. Δp_s [kPa]	DN	k_{vs} [m³/h]	Stock no.	Product no.
800	1600	65	63	S55206-V110	**VVF43.65-63K**
800	1600	80	100	S55206-V111	**VVF43.80-100K**
800	1600	100	150	S55206-V120	**VVF43.100-150K**
800	1600	125	220	S55206-V121	**VVF43.125-220K**
800	1600	150	315	S55206-V122	**VVF43.150-315K**
800	1200	200	450	S55206-V123	**VVF43.200-450K**
800	1000	250	630	S55206-V124	**VVF43.250-630K**

Replacement sealing glands for VVF43..K

Product Title	Data sheet	Stock no.	Product no.
Stem connection washer for SKB/SKC actuators, stem diameter 10 mm, set of 5		BPZ:7424200000	**7424200000**
Replacement sealing gland, stem diameter 10 mm, sealing material FEPM		S55845-Z150	**7428400610**
Sealing gland complete, stem diameter 14 mm, sealing material PTFE, up to 220 °C		BPZ:467956300	**467956300**

Combinable actuator for VVF43..K

Operating voltage [V]	Positioning signal	Positioning time [s]	Spring return function	Data sheet	Stock no.	Product no.
AC 230	3-position	120	No	N4566	BPZ:SKC32.60	**SKC32.60**
AC 230	3-position	120	Yes (18 s)	N4566	BPZ:SKC32.61	**SKC32.61**
AC 24	DC 0...10 V 4...20 mA 0...1000 Ohm	Open:120 Close:20	No	N4566	BPZ:SKC60	**SKC60**
AC 24	DC 0...10 V 4...20 mA 0...1000 Ohm	Open:120 Close:20	Yes (20 s)	N4566	BPZ:SKC62	**SKC62**
AC 24	Modbus RTU	Open 120 Close 20	Yes	N4566	S55195-A128	**SKC62/MO**
AC 24 24	DC 0...10 V 4...20 mA 0...1000 Ohm	Open:120 Close:20	Yes (20 s)	N4566	BPZ:SKC62UA	**SKC62UA**
AC 24	3-position	120	No	N4566	BPZ:SKC82.60	**SKC82.60**
AC 24	3-position	120	Yes (18 s)	N4566	BPZ:SKC82.61	**SKC82.61**

Globe and pressure independent control valve (PICV)
2-port flanged valves

VVF47..

2-port seat valves PN16, flanged connections VVF47..

For use in heating, ventilating and air conditioning systems as a control valve for closed circuits

Data sheet	N4419
Leakage rate	0...0.1% of Kvs value
Medium temperature	1...95 °C
Valve characteristic	Equal percentage, Kvs 250/315 Linear
Rangeability	DN 50...150: > 50
Material, valve body	Cast iron EN-GJL-250
Material, inside set	CrNi/bronze
PN class	PN 16
Warranty	60 Months

Range overview VVF47..

For customers in Asia / Australia

SBX.. Δp_{max} [kPa]	SBX.. Δp_s [kPa]	SBV.. Δp_{max} [kPa]	SBV.. Δp_s [kPa]	DN	k_{vs} [m³/h]	Stock no.	Product no.
300	300			50	40	S55220-V106	**VVF47.50**
175	175	300	400	65	63	S55220-V107	**VVF47.65**
100	100	250	250	80	100	S55220-V108	**VVF47.80**
		300	400	100	160	S55220-V109	**VVF47.100**
		300	400	125	250	S55220-V110	**VVF47.125**
		300	400	150	315	S55220-V111	**VVF47.150**

Combinable actuator for VVF47..

Operating voltage [V]	Positioning signal	Positioning time [s]	Data sheet	Stock no.	Product no.
AC 230	3-position	180	N4519	S55160-A105	**SBV31**
AC 230	3-position	120	N4519	S55160-A102	**SBX31**
AC 24	DC 0...10 V	180	N4519	S55160-A103	**SBV61**
AC 24	DC 0...10 V	120	N4519	S55160-A100	**SBX61**
AC 24	3-position	180	N4519	S55160-A104	**SBV81**
AC 24	3-position	120	N4519	S55160-A101	**SBX81**

2-port seat valve PN25 with flanged connections

VVF53..

- With flanged connections to ISO 7005
- For cooling, chilled, low and high temperature water, brine, heat transfer oils, saturated and superheated steam in open and closed circuits

When using valves of the V..F43.., V..F53.. lines with a stem heating element and a medium temperature of below -5 °C, the stem sealing gland must be replaced.

Data sheet	N4405
Stroke	To DN 50: 20 mm From DN 65: 40 mm
Leakage rate	0...0.01 % of k_{vs} value
Medium temperature	-20...220 °C
Valve characteristic	Equal percentage k_{vs} 250/400 linear
Rangeability	DN 15, k_{vs} ≤ 1,25 m³/h: >50 DN 15...150: >100
Permissible operating pressure	2500 kPa
Material, valve body	Cast iron EN-GJS-400-18-LT
Material, inside set	Stainless steel
PN class	PN 16 / PN 25
Absolute pressure p1 steam	1600 kPa abs
Warranty	60 Months

Range overview VVF53..

SAX.. Δp_{max} [kPa]	SAX.. Δp_s [kPa]	SAV.. Δp_{max} [kPa]	SAV.. Δp_s [kPa]	SKD.. Δp_{max} [kPa]	SKD.. Δp_s [kPa]	SKB.. Δp_{max} [kPa]	SKB.. Δp_s [kPa]	SKC.. Δp_{max} [kPa]	SKC.. Δp_s [kPa]	DN	k_{vs} [m³/h]	Stock no.	Product no.
1200	2500			1200	2500	1200	2500			15	0.16	S55208-V100	**VVF53.15-0.16**
1200	2500			1200	2500	1200	2500			15	0.2	S55208-V101	**VVF53.15-0.2**
1200	2500			1200	2500	1200	2500			15	0.25	S55208-V102	**VVF53.15-0.25**
1200	2500			1200	2500	1200	2500			15	0.32	S55208-V103	**VVF53.15-0.32**
1200	2500			1200	2500	1200	2500			15	0.4	S55208-V104	**VVF53.15-0.4**
1200	2500			1200	2500	1200	2500			15	0.5	S55208-V105	**VVF53.15-0.5**
1200	2500			1200	2500	1200	2500			15	0.63	S55208-V106	**VVF53.15-0.63**
1200	2500			1200	2500	1200	2500			15	0.8	S55208-V107	**VVF53.15-0.8**
1200	2500			1200	2500	1200	2500			15	1	S55208-V108	**VVF53.15-1**
1200	2500			1200	2500	1200	2500			15	1.25	S55208-V109	**VVF53.15-1.25**
1200	2500			1200	2500	1200	2500			15	1.6	S55208-V110	**VVF53.15-1.6**
1200	2500			1200	2500	1200	2500			15	2	S55208-V111	**VVF53.15-2**
1200	2500			1200	2500	1200	2500			15	2.5	S55208-V112	**VVF53.15-2.5**
1200	2500			1200	2500	1200	2500			15	3.2	S55208-V113	**VVF53.15-3.2**
1200	2500			1200	2500	1200	2500			15	4	S55208-V114	**VVF53.15-4**
1200	2500			1200	2500	1200	2500			20	6.3	S55208-V116	**VVF53.20-6.3**
1200	1600			1200	2100	1200	2500			25	10	S55208-V120	**VVF53.25-10**
1200	1600			1200	2100	1200	2500			25	5	S55208-V117	**VVF53.25-5**
1200	1600			1200	2100	1200	2500			25	6.3	S55208-V118	**VVF53.25-6.3**
1200	1600			1200	2100	1200	2500			25	8	S55208-V119	**VVF53.25-8**
750	900			1100	1200	1200	2500			32	16	S55208-V122	**VVF53.32-16**
500	550	1150	1250	650	750	1200	2000			40	12.5	S55208-V123	**VVF53.40-12.5**
500	550	1150	1250	650	750	1200	2000			40	16	S55208-V124	**VVF53.40-16**
500	550	1150	1250	650	750	1200	2000			40	20	S55208-V125	**VVF53.40-20**
500	550	1150	1250	650	750	1200	2000			40	25	S55208-V126	**VVF53.40-25**
300	350	700	750	400	450	1150	1200			50	31.5	S55208-V127	**VVF53.50-31.5**
300	350	700	750	400	450	1150	1200			50	40	S55208-V128	**VVF53.50-40**
		400	450					650	700	65	63	S55208-V129	**VVF53.65-63**
		225	250					400	450	80	100	S55208-V130	**VVF53.80-100**

Globe and pressure independent control valve (PICV)
2-port flanged valves

Range overview VVF53..

SAX.. Δp_{max} [kPa]	SAX.. Δp_s [kPa]	SAV.. Δp_{max} [kPa]	SAV.. Δp_s [kPa]	SKD.. Δp_{max} [kPa]	SKD.. Δp_s [kPa]	SKB.. Δp_{max} [kPa]	SKB.. Δp_s [kPa]	SKC.. Δp_{max} [kPa]	SKC.. Δp_s [kPa]	DN	k_{vs} [m³/h]	Stock no.	Product no.
		125	160					250	300	100	160	S55208-V131	**VVF53.100-160**
		90	125					160	175	125	250	S55208-V132	**VVF53.125-250**
		60	80					100	125	150	400	S55208-V133	**VVF53.150-400**

Replacement sealing glands for VVF53..

Product Title	Stock no.	Product no.
Sealing gland complete, stem diameter 10 mm, sealing material EPDM	BPZ:428488060	**428488060**
Stem connection washer for SKB/SKC actuators, stem diameter 10 mm, set of 5	BPZ:7424200000	**7424200000**
Replacement sealing gland, stem diameter 10 mm, sealing material FEPM	S55845-Z150	**7428400610**

Combinable actuator for VVF53..

Operating voltage [V]	Positioning signal	Positioning time [s]	Spring return function	Data sheet	Stock no.	Product no.
AC 230	3-position	120	no	N4501	S55150-A105	**SAX31.00**
AC 230	3-position	30	no	N4501	S55150-A106	**SAX31.03**
AC/DC 24	DC 0...10 V DC 4...20 mA 0...1000 Ohm	30	no	N4501	S55150-A100	**SAX61.03**
AC/DC 24	Modbus RTU	30	No	N4501	S55150-A140	**SAX61.03/MO**
AC/DC 24	3-position	120	no	N4501	S55150-A102	**SAX81.00**
AC/DC 24	3-position	30	no	N4501	S55150-A103	**SAX81.03**
AC 230	3-position	120	No	N4503	S55150-A112	**SAV31.00**
AC/DC 24	DC 0...10 V DC 4...20 mA 0...1000 Ohm	120	No	N4503	S55150-A110	**SAV61.00**
AC/DC 24	Modbus RTU	120	No	N4503	S55150-A141	**SAV61.00/MO**
AC/DC 24	3-position	120	No	N4503	S55150-A111	**SAV81.00**
AC 230	3-position	Open:30 Close:10	Yes (8 s)	N4561	BPZ:SKD32.21	**SKD32.21**
AC 230	3-position	120	No	N4561	BPZ:SKD32.50	**SKD32.50**
AC 230	3-position	120	Yes (8 s)	N4561	BPZ:SKD32.51	**SKD32.51**
AC 24	DC 0...10 V DC 4...20 mA 0...1000 Ohm	Open:30 Close:15	No	N4561	BPZ:SKD60	**SKD60**
AC 24	DC 0...10 V DC 4...20 mA 0...1000 Ohm	Open:30 Close:15	Yes (15 s)	N4561	BPZ:SKD62	**SKD62**
AC 24	Modbus RTU	Open 30 Close 15	Yes	N4561	S55195-A129	**SKD62/MO**
AC 24 24	DC 0...10 V DC 4...20 mA 0...1000 Ohm	Open:30 Close:15	Yes (15 s)	N4561	BPZ:SKD62UA	**SKD62UA**
AC 24	3-position	120	No	N4561	BPZ:SKD82.50	**SKD82.50**
AC 24	3-position	120	Yes (8 s)	N4561	BPZ:SKD82.51	**SKD82.51**
AC 230	3-position	120	No	N4564	BPZ:SKB32.50	**SKB32.50**
AC 230	3-position	120	Yes (10 s)	N4564	BPZ:SKB32.51	**SKB32.51**
AC 24	DC 0...10 V 4...20 mA 0...1000 Ohm	Open:120 Close:10	No	N4564	BPZ:SKB60	**SKB60**
AC 24	DC 0...10 V 4...20 mA 0...1000 Ohm	Open:120 Close:10	Yes (10 s)	N4564	BPZ:SKB62	**SKB62**

Combinable actuator for VVF53..

Operating voltage [V]	Positioning signal	Positioning time [s]	Spring return function	Data sheet	Stock no.	Product no.
AC 24	Modbus RTU	Open 120 Close 10	Yes	N4564	S55195-A127	**SKB62/MO**
AC 24 24	DC 0...10 V 4...20 mA 0...1000 Ohm	Open:120 Close:10	Yes (10 s)	N4564	BPZ:SKB62UA	**SKB62UA**
AC 24	3-position	120	No	N4564	BPZ:SKB82.50	**SKB82.50**
AC 24	3-position	120	Yes (10 s)	N4564	BPZ:SKB82.51	**SKB82.51**
AC 230	3-position	120	No	N4566	BPZ:SKC32.60	**SKC32.60**
AC 230	3-position	120	Yes (18 s)	N4566	BPZ:SKC32.61	**SKC32.61**
AC 24	DC 0...10 V 4...20 mA 0...1000 Ohm	Open:120 Close:20	No	N4566	BPZ:SKC60	**SKC60**
AC 24	DC 0...10 V 4...20 mA 0...1000 Ohm	Open:120 Close:20	Yes (20 s)	N4566	BPZ:SKC62	**SKC62**
AC 24	Modbus RTU	Open 120 Close 20	Yes	N4566	S55195-A128	**SKC62/MO**
AC 24 24	DC 0...10 V 4...20 mA 0...1000 Ohm	Open:120 Close:20	Yes (20 s)	N4566	BPZ:SKC62UA	**SKC62UA**
AC 24	3-position	120	No	N4566	BPZ:SKC82.60	**SKC82.60**
AC 24	3-position	120	Yes (18 s)	N4566	BPZ:SKC82.61	**SKC82.61**

Globe and pressure independent control valve (PICV)
2-port flanged valves

VVF53..K

2-port seat valve PN25 with flanged connections, pressure compensated

- With flanged connections to ISO 7005.
- For cooling, chilled, low and high temperature water, brine, heat transfer oils, saturated steam and superheated steam in open and closed circuits.

Data sheet	N4405
Stroke	DN 50: 20 mm From DN 65: 40 mm
Leakage rate	0...0.01 % of k_{vs} value
Medium temperature	-5...220 °C
Valve characteristic	Equal percentage k_{vs} 220/315 linear
Rangeability	> 100
Permissible operating pressure	2500 kPa
Material, valve body	Cast iron EN-GJS-400-18-LT
Material, inside set	CrNi steel
PN class	PN 25
Absolute pressure p1 steam	1600 kPa abs
Warranty	60 Months

Range overview VVF53..K

SKD.. Δp_{max} [kPa]	SKD.. Δp_s [kPa]	SKB.. Δp_{max} [kPa]	SKB.. Δp_s [kPa]	SKC.. Δp_{max} [kPa]	SKC.. Δp_s [kPa]	DN	k_{vs} [m³/h]	Stock no.	Product no.
1250	2500	1250	2500			50	40	S55208-V134	**VVF53.50-40K**
				1250	2500	65	63	S55208-V135	**VVF53.65-63K**
				1250	2500	80	100	S55208-V136	**VVF53.80-100K**
				1250	2500	100	150	S55208-V158	**VVF53.100-150K**
				1250	2500	125	220	S55208-V159	**VVF53.125-220K**
				1250	2500	150	315	S55208-V160	**VVF53.150-315K**
				800	1200	200	450	S55208-V161	**VVF53.200-450K**
				800	1000	250	630	S55208-V162	**VVF53.250-630K**

Replacement sealing glands for VVF53..K

Product Title	Stock no.	Product no.
Stem connection washer for SKB/SKC actuators, stem diameter 10 mm, set of 5	BPZ:7424200000	**7424200000**
Replacement sealing gland, stem diameter 10 mm, sealing material FEPM	S55845-Z150	**7428400610**
Replacement sealing gland, stem diameter 14 mm, sealing material FEPM	S55846-Z114	**ALV14F32S**

8

Combinable actuator for VVF53..K

Operating voltage [V]	Positioning signal	Positioning time [s]	Spring return function	Data sheet	Stock no.	Product no.
AC 230	3-position	Open:30 Close:10	Yes (8 s)	N4561	BPZ:SKD32.21	**SKD32.21**
AC 230	3-position	120	No	N4561	BPZ:SKD32.50	**SKD32.50**
AC 230	3-position	120	Yes (8 s)	N4561	BPZ:SKD32.51	**SKD32.51**
AC 24	DC 0...10 V DC 4...20 mA 0...1000 Ohm	Open:30 Close:15	No	N4561	BPZ:SKD60	**SKD60**
AC 24	DC 0...10 V DC 4...20 mA 0...1000 Ohm	Open:30 Close:15	Yes (15 s)	N4561	BPZ:SKD62	**SKD62**
AC 24	Modbus RTU	Open 30 Close 15	Yes	N4561	S55195-A129	**SKD62/MO**

Combinable actuator for VVF53..K

Operating voltage [V]	Positioning signal	Positioning time [s]	Spring return function	Data sheet	Stock no.	Product no.
AC 24 24	DC 0...10 V DC 4...20 mA 0...1000 Ohm	Open:30 Close:15	Yes (15 s)	N4561	BPZ:SKD62UA	**SKD62UA**
AC 24	3-position	120	No	N4561	BPZ:SKD82.50	**SKD82.50**
AC 24	3-position	120	Yes (8 s)	N4561	BPZ:SKD82.51	**SKD82.51**
AC 230	3-position	120	No	N4564	BPZ:SKB32.50	**SKB32.50**
AC 230	3-position	120	Yes (10 s)	N4564	BPZ:SKB32.51	**SKB32.51**
AC 24	DC 0...10 V 4...20 mA 0...1000 Ohm	Open:120 Close:10	No	N4564	BPZ:SKB60	**SKB60**
AC 24	DC 0...10 V 4...20 mA 0...1000 Ohm	Open:120 Close:10	Yes (10 s)	N4564	BPZ:SKB62	**SKB62**
AC 24	Modbus RTU	Open 120 Close 10	Yes	N4564	S55195-A127	**SKB62/MO**
AC 24 24	DC 0...10 V 4...20 mA 0...1000 Ohm	Open:120 Close:10	Yes (10 s)	N4564	BPZ:SKB62UA	**SKB62UA**
AC 24	3-position	120	No	N4564	BPZ:SKB82.50	**SKB82.50**
AC 24	3-position	120	Yes (10 s)	N4564	BPZ:SKB82.51	**SKB82.51**
AC 230	3-position	120	No	N4566	BPZ:SKC32.60	**SKC32.60**
AC 230	3-position	120	Yes (18 s)	N4566	BPZ:SKC32.61	**SKC32.61**
AC 24	DC 0...10 V 4...20 mA 0...1000 Ohm	Open:120 Close:20	No	N4566	BPZ:SKC60	**SKC60**
AC 24	DC 0...10 V 4...20 mA 0...1000 Ohm	Open:120 Close:20	Yes (20 s)	N4566	BPZ:SKC62	**SKC62**
AC 24	Modbus RTU	Open 120 Close 20	Yes	N4566	S55195-A128	**SKC62/MO**
AC 24 24	DC 0...10 V 4...20 mA 0...1000 Ohm	Open:120 Close:20	Yes (20 s)	N4566	BPZ:SKC62UA	**SKC62UA**
AC 24	3-position	120	No	N4566	BPZ:SKC82.60	**SKC82.60**
AC 24	3-position	120	Yes (18 s)	N4566	BPZ:SKC82.61	**SKC82.61**

Globe and pressure independent control valve (PICV)
2-port flanged valves

VVF63..

2-port valves, PN 40, with flanged connections

- With flanged connections to ISO 7005
- For cooling, chilled, low and high temperature water, brine, heat transfer oils, saturated and superheated steam in open and closed circuits

Data sheet	A6V11459527
Stroke	To DN 50: 20 mm From DN 65: 40 mm
Leakage rate	0...0.01 % of kvs
Medium temperature	-20...220 °C
Valve characteristic	Equal percentage
Rangeability	Fluids - DN 15...40: > 50 Fluids - DN 50...150: > 100 Steam: > 50
Permissible operating pressure	4000 kPa
Material, inside set	Stainless steel
PN class	PN 40
Warranty	60 Months

Range overview VVF63..

SKD.. Δp_{max} [kPa]	SKD.. Δp_s [kPa]	SKB.. Δp_{max} [kPa]	SKB.. Δp_s [kPa]	SKC.. Δp_{max} [kPa]	SKC.. Δp_s [kPa]	DN	k_{vs} [m³/h]	Stock no.	Product no.
2000	4000	2000	4000			15	0.2	S55210-V100	**VVF63.15-0.2**
2000	4000	2000	4000			15	0.32	S55210-V101	**VVF63.15-0.32**
2000	4000	2000	4000			15	0.5	S55210-V102	**VVF63.15-0.5**
2000	4000	2000	4000			15	0.8	S55210-V103	**VVF63.15-0.8**
2000	4000	2000	4000			15	1.25	S55210-V104	**VVF63.15-1.25**
2000	4000	2000	4000			15	2	S55210-V105	**VVF63.15-2**
2000	4000	2000	4000			15	3.2	S55210-V106	**VVF63.15-3.2**
2000	3500	2000	4000			20	5	S55210-V107	**VVF63.20-6.3**
2000	2100	2000	4000			25	5	S55210-V108	**VVF63.25-5**
2000	2100	2000	4000			25	8	S55210-V109	**VVF63.25-8**
1100	1200	2000	3200			32	15	S55210-V110	**VVF63.32-16**
650	750	1800	2000			40	12.5	S55210-V111	**VVF63.40-12.5**
650	750	1800	2000			40	20	S55210-V112	**VVF63.40-20**
400	450	1150	1200			50	31.5	S55210-V113	**VVF63.50-31.5**
				650	700	65	50	S55210-V114	**VVF63.65-50**
				400	450	80	80	S55210-V115	**VVF63.80-80**
				250	300	100	125	S55210-V116	**VVF63.100-125**
				160	175	125	200	S55210-V117	**VVF63.125-200**
				100	125	150	315	S55210-V118	**VVF63.150-315**

2-port seat valve PN40 with flanged connections, pressure compensated

VVF63..K

- With flanged connections to ISO 7005
- For cooling, chilled, low and high temperature water, brine, heat transfer oils, saturated and superheated steam in open and closed circuits

Data sheet	A6V11459527
Stroke	DN 50: 20 mm From DN 65: 40 mm
Leakage rate	0...0.01 % of k_{vs} value
Medium temperature	-5...220 °C
Valve characteristic	Equal percentage
Rangeability	DN 50...100: > 100 DN 125...150: > 50
Permissible operating pressure	4000 kPa
Material, inside set	Stainless steel
PN class	PN 40
Warranty	60 Months

Range overview VVF63..K

SKD.. Δp_{max} [kPa]	SKD.. Δp_s [kPa]	SKB.. Δp_{max} [kPa]	SKB.. Δp_s [kPa]	SKC.. Δp_{max} [kPa]	SKC.. Δp_s [kPa]	DN	k_{vs} [m³/h]	Stock no.	Product no.
1500	4000	2000	4000			50	36	S55210-V119	**VVF63.50-40K**
				2000	4000	65	63	S55210-V120	**VVF63.65-63K**
				2000	4000	80	100	S55210-V121	**VVF63.80-100K**
				2000	4000	100	150	S55210-V122	**VVF63.100-150K**
				2000	4000	125	220	S55210-V123	**VVF63.125-220K**
				2000	4000	150	315	S55210-V124	**VVF63.150-315K**

Accessories for VVF63..

Product Title	Data sheet	Stock no.	Product no.
Stem heating element for media < 0 °C	N4501	S55845-Z108	**ASZ6.6**

Replacement sealing glands for VVF63..

Product Title	Data sheet	Stock no.	Product no.
Sealing gland complete, stem diameter 10 mm, sealing material EPDM		BPZ:428488060	**428488060**
Replacement sealing gland, stem diameter 10 mm, sealing material FEPM		S55845-Z150	**7428400610**
Replacement sealing gland, stem diameter 14 mm, sealing material FEPM		S55846-Z114	**ALV14F32S**
Sealing gland complete, stem diameter 14 mm, sealing material EPDM, up to 150 °C		BPZ:467956290	**467956290**

Combinable actuator for VVF63..

Operating voltage [V]	Positioning signal	Positioning time [s]	Spring return function	Data sheet	Stock no.	Product no.
AC 230	3-position	Open:30 Close:10	Yes (8 s)	N4561	BPZ:SKD32.21	**SKD32.21**
AC 230	3-position	120	No	N4561	BPZ:SKD32.50	**SKD32.50**
AC 230	3-position	120	Yes (8 s)	N4561	BPZ:SKD32.51	**SKD32.51**
AC 24	DC 0...10 V DC 4...20 mA 0...1000 Ohm	Open:30 Close:15	No	N4561	BPZ:SKD60	**SKD60**
AC 24	DC 0...10 V DC 4...20 mA 0...1000 Ohm	Open:30 Close:15	Yes (15 s)	N4561	BPZ:SKD62	**SKD62**
AC 24	Modbus RTU	Open 30 Close 15	Yes	N4561	S55195-A129	**SKD62/MO**

Combinable actuator for VVF63..

Operating voltage [V]	Positioning signal	Positioning time [s]	Spring return function	Data sheet	Stock no.	Product no.
AC 19.2...31.2 24	DC 0...10 V DC 4...20 mA 0...1000 Ohm	Open:30 Close:15	Yes (15 s)	N4561	BPZ:SKD62U	**SKD62U**
AC 24 24	DC 0...10 V DC 4...20 mA 0...1000 Ohm	Open:30 Close:15	Yes (15 s)	N4561	BPZ:SKD62UA	**SKD62UA**
AC 24	3-position	120	No	N4561	BPZ:SKD82.50	**SKD82.50**
AC 24	3-position	120	No	N4561	BPZ:SKD82.50U	**SKD82.50U**
AC 24	3-position	120	Yes (8 s)	N4561	BPZ:SKD82.51	**SKD82.51**
AC 24	3-position	120	Yes (8 s)	N4561	BPZ:SKD82.51U	**SKD82.51U**
AC 230	3-position	120	No	N4564	BPZ:SKB32.50	**SKB32.50**
AC 230	3-position	120	Yes (10 s)	N4564	BPZ:SKB32.51	**SKB32.51**
AC 24	DC 0...10 V 4...20 mA 0...1000 Ohm	Open:120 Close:10	No	N4564	BPZ:SKB60	**SKB60**
AC 24	DC 0...10 V 4...20 mA 0...1000 Ohm	Open:120 Close:10	Yes (10 s)	N4564	BPZ:SKB62	**SKB62**
AC 24	Modbus RTU	Open 120 Close 10	Yes	N4564	S55195-A127	**SKB62/MO**
AC 24 24	DC 0...10 V 4...20 mA 0...1000 Ohm	Open:120 Close:10	Yes (10 s)	N4564	BPZ:SKB62U	**SKB62U**
AC 24 24	DC 0...10 V 4...20 mA 0...1000 Ohm	Open:120 Close:10	Yes (10 s)	N4564	BPZ:SKB62UA	**SKB62UA**
AC 24	3-position	120	No	N4564	BPZ:SKB82.50	**SKB82.50**
AC 24	3-position	120	Yes (10 s)	N4564	BPZ:SKB82.51	**SKB82.51**
AC 24 24	3-position	120	No	N4564	BPZ:SKB82.50U	**SKB82.50U**
AC 230	3-position	120	No	N4566	BPZ:SKC32.60	**SKC32.60**
AC 19.2...28.2 24	3-position	120	Yes (10 s)	N4564	BPZ:SKB82.51U	**SKB82.51U**
AC 230	3-position	120	Yes (18 s)	N4566	BPZ:SKC32.61	**SKC32.61**
AC 24	DC 0...10 V 4...20 mA 0...1000 Ohm	Open:120 Close:20	No	N4566	BPZ:SKC60	**SKC60**
AC 24	DC 0...10 V 4...20 mA 0...1000 Ohm	Open:120 Close:20	Yes (20 s)	N4566	BPZ:SKC62	**SKC62**
AC 24	Modbus RTU	Open 120 Close 20	Yes	N4566	S55195-A128	**SKC62/MO**
AC 24 24	DC 0...10 V 4...20 mA 0...1000 Ohm	Open:120 Close:20	Yes (20 s)	N4566	BPZ:SKC62U	**SKC62U**
AC 24 24	DC 0...10 V 4...20 mA 0...1000 Ohm	Open:120 Close:20	Yes (20 s)	N4566	BPZ:SKC62UA	**SKC62UA**
AC 24	3-position	120	No	N4566	BPZ:SKC82.60	**SKC82.60**
AC 24	3-position	120	Yes (18 s)	N4566	BPZ:SKC82.61	**SKC82.61**
AC 24 24	3-position	120	No	N4566	BPZ:SKC82.60U	**SKC82.60U**
AC 24 24	3-position	120	Yes (18 s)	N4566	BPZ:SKC82.61U	**SKC82.61U**

Modulating control valves with magnetic actuator, PN16, flanged

MVF461H..

2-port valves PN 16 with magnetic actuator for modulating control of high-temperature hot water or steam.
With positioning control, position feedback signal, spring return function and manual control.

Data sheet	N4361
PN class	PN 16
Operating voltage	AC 24 V DC 24 V
Positioning signal	DC 0...10 V DC 2...10 V DC 0...20 mA DC 4...20 mA DC 0...20 V Phs
Positioning time	< 2 s
Spring return function	A-> AB closed
Position feedback	DC 0...10 V DC 2...10 V DC 0...20 mA DC 4...20 mA
Degree of protection	IP31
Ambient temperature, operation	-5...45 °C
Mounting position	Upright to horizontal
Permissible operating pressure	Water < 120 °C: 1600 kPa Water > 120 °C: 1300 kPa Saturated steam: 900 kPa
Leakage rate	< 0.05% of k_{vs} value
Absolute pressure p1 steam	900 kPa abs
Medium temperature	1...180 °C
Valve characteristic	Equal-percentage Linear
Stroke resolution $\Delta H/H_{100}$	1:1000
Material, valve body	Cast iron EN-GJS-400-18-LT
Material, inside set	CrNi steel
Warranty	60 Months

Range overview MVF461H..

Scope of delivery: 1 blanking flange, 1 seal, screws, spring washers and nuts.

DN	k_{vs} [m³/h]	Δp_{max} [kPa]	Δp_s [kPa]	Stock no.	Product no.
15	0.6	1000	1000	BPZ:MVF461H15-0.6	**MVF461H15-0.6**
15	1.5	1000	1000	BPZ:MVF461H15-1.5	**MVF461H15-1.5**
15	3	1000	1000	BPZ:MVF461H15-3	**MVF461H15-3**
20	5	1000	1000	BPZ:MVF461H20-5	**MVF461H20-5**
25	8	1000	1000	BPZ:MVF461H25-8	**MVF461H25-8**
32	12	1000	1000	BPZ:MVF461H32-12	**MVF461H32-12**
40	20	1000	1000	BPZ:MVF461H40-20	**MVF461H40-20**
50	30	1000	1000	BPZ:MVF461H50-30	**MVF461H50-30**

MVF.. valves with magnetic actuators are UL-listed.

Accessories for MVF461..

Product Title	Data sheet	Stock no.	Product no.
Replacement electronic for MVL661.. and MVS661..N	N4714	BPZ:ASR61	**ASR61**
Replacement electronic for MXG461B.., MVF461H.. and MXG462S..		BPZ:ASE12	**ASE12**

Globe and pressure independent control valve (PICV)
2-port threaded valves

VDN1..

2-port valves PN10, DIN design

Radiator valves for 2-pipe heating systems for room temperature control. Adjustable flow.
Permissible media: water (to VDI 2035), water with anti-freeze

The valves can be combined with Siemens actuators RTN../SSA../STA..

Data sheet	N2105
Stroke	>1.2 mm
Medium	Water with anti-freeze
Medium temperature	1...120 °C
Permissible operating pressure	1000 kPa
Material, valve body	Brass, nickel-plated
PN class	PN 10
ΔP_{v100}	5...20 kPa
Warranty	60 Months

Range overview VDN1..

kv relation of Xp	Con-nect. thread	Δp_{max} [kPa]	DN	k_{vs} [m³/h]	Stock no.	Product no.
0.072...0.43 m³/h / 2 K 0.057...0.33 m³/h / 1.5 K 0.037...0.22 m³/h /1 K	Rp/R ⅜"	60	10	0.63	BPZ:VDN110	**VDN110**
0.073...0.5 m³/h/ 2 K; 0.058...0.4 m³/h/ 1.5 K; 0.038...0.27 m³/h/ 1 K	Rp/R ½"	60	15	0.89	BPZ:VDN115	**VDN115**
0.22...0.7 m³/h/ 2 K; 0.17...0.55 m³/h/ 1.5 K; 0.11...0.36 m³/h/ 1 K	Rp/R ¾"	60	20	1.41	BPZ:VDN120	**VDN120**

VEN1..

Angle valves PN10, DIN design

Radiator valves for 2-pipe heating systems for room temperature control. Adjustable flow.
Permissible media: water (to VDI 2035), water with anti-freeze

The valves can be combined with Siemens actuators RTN../SSA../STA..

Data sheet	N2105
Stroke	>1.2 mm
Medium	Water with anti-freeze
Medium temperature	1...120 °C
Permissible operating pressure	1000 kPa
Material, valve body	Brass, nickel-plated
PN class	PN 10
ΔP_{v100}	5...20 kPa
Warranty	60 Months

Range overview VEN1..

kv relation of Xp	Con-nect. thread	Δp_{max} [kPa]	DN	k_{vs} [m³/h]	Stock no.	Product no.
0.072...0.43 m³/h/ 2 K; 0.057...0.33 m³/h/ 1.5 K; 0.037...0.22 m³/h/ 1 K	Rp/R ⅜"	60	10	0.63	BPZ:VEN110	**VEN110**
0.073...0.5 m³/h/ 2 K; 0.058...0.4 m³/h/ 1.5 K; 0.038...0.27 m³/h/ 1 K	Rp/R ½"	60	15	0.89	BPZ:VEN115	**VEN115**
0.22...0.7 m³/h/ 2 K; 0.17...0.55 m³/h/ 1.5 K; 0.11...0.36 m³/h/ 1 K	Rp/R ¾"	60	20	1.41	BPZ:VEN120	**VEN120**

Combinable actuator for VDN1../VEN1..

Operating voltage [V]	Positioning signal	Positioning time [s]	Cable length [m]	Data sheet	Stock no.	Product no.
AC 230	2-position	210	1	N4884	S55174-A101	**STA23**
AC 24	DC 0...10 V	270	2	N4884	S55174-A104	**STA63**
AC 24 DC 24	2-position PDM	270	1	N4884	S55174-A100	**STA73**
AC 24 DC 24	2-position PDM	270		N4884	S55174-A109	**STA73/00**
				N2111	BPZ:RTN51	**RTN51**
				N4211	BPZ:RTN51G	**RTN51G**
				N2111	BPZ:RTN71	**RTN71**
				N2111	BPZ:RTN81	**RTN81**
DC 21...30 24		50/100	1.5	A6V11858280	S55180-A111	**SSA118.09HKN**
3.0				A6V12789814	S55181-A105	**SSA911.02ZB**
AC/DC 24		270	1	A6V12968650	S55174-A177	**STA121**
AC/DC 24		270	2	A6V12968650	S55174-A181	**STA121.L20**
AC/DC 24		270	2	A6V12968650	S55174-A195	**STA121.L20H**
AC/DC 24		270	5	A6V12968650	S55174-A185	**STA121.L50**
AC 230		210	1	A6V12968650	S55174-A178	**STA321**
AC 230		210	2	A6V12968650	S55174-A182	**STA321.L20**
AC 230		210	2	A6V12968650	S55174-A196	**STA321.L20H**
AC 230		210	5	A6V12968650	S55174-A186	**STA321.L50**
AC/DC 24		270	1	A6V12968650	S55174-A179	**STP121**
AC 230		210	1	A6V12968650	S55174-A180	**STP321**
AC 230	3-position	150	1.5	N4893	BPZ:SSA31.1	**SSA31.1**
AC 24	3-position	150	1.5	N4893	BPZ:SSA81.1	**SSA81.1**
AC 24	3-position	67.5	1.5	A6V11858276	S55180-A106	**SSA131.00**
AC 24 DC 24	4...20 mA	25	1.5	A6V11858278	S55180-A110	**SSA151.05HF**
AC 24 DC 24	DC 0...10 V	25	1.5	A6V11858276	S55180-A107	**SSA161.05**
AC 24 DC 24	DC 0...10 V	25	1.5	A6V11858278	S55180-A108	**SSA161.05HF**
AC 24 DC 24	DC 0...10 V	25	1.5	A6V11858278	S55180-A109	**SSA161E.05HF**
AC 230	3-position	67.5	1.5	A6V11858276	S55180-A105	**SSA331.00**

VDN2..

2-port seat valves PN10, NF design

Radiator valves for 2-pipe heating systems for room temperature control. Adjustable flow.
Permissible media: water (to VDI 2035), water with anti-freeze

The valves can be combined with Siemens actuators RTN../SSA.../STA..

Data sheet	N2106
Stroke	>1.2 mm
Medium	Water with anti-freeze
Medium temperature	1...120 °C
Permissible operating pressure	1000 kPa
Material, valve body	Brass, nickel-plated
PN class	PN 10
ΔP_{v100}	5...20 kPa
Warranty	60 Months

Range overview VDN2..

kv relation of Xp	Con-nect. thread	Δp_{max} [kPa]	DN	k_{vs} [m³/h]	Stock no.	Product no.
0.072...0.43 m³/h / 2 K 0.057...0.33 m³/h / 1.5 K 0.037...0.22 m³/h /1 K	Rp/R ⅜"	60	10	0.63	BPZ:VDN210	**VDN210**
0.073...0.50 m³/h / 2 K 0.058...0.40 m³/h / 1.5 K 0.038...0.27 m³/h / 1 K	Rp/R ½"	60	15	0.89	BPZ:VDN215	**VDN215**
0.22...0.7 m³/h/ 2 K; 0.17...0.55 m³/h/ 1.5 K; 0.11...0.36 m³/h/ 1 K	Rp/R ¾"	60	20	1.41	BPZ:VDN220	**VDN220**

VEN2..

Angle valves PN10, NF design

Radiator valves for 2-pipe heating systems for room temperature control. Adjustable flow.
Permissible media: water (to VDI 2035), water with anti-freeze

The valves can be combined with Siemens actuators RTN../SSA.../STA..

Data sheet	N2106
Stroke	>1.2 mm
Medium	Water with anti-freeze
Medium temperature	1...120 °C
Permissible operating pressure	1000 kPa
Material, valve body	Brass, nickel-plated
PN class	PN 10
ΔP_{v100}	5...20 kPa
Warranty	60 Months

Range overview VEN2..

kv relation of Xp	Con-nect. thread	Δp_{max} [kPa]	DN	k_{vs} [m³/h]	Stock no.	Product no.
0.072...0.43 m³/h / 2 K 0.057...0.33 m³/h / 1.5 K 0.037...0.22 m³/h /1 K	Rp/R ⅜"	60	10	0.63	BPZ:VEN210	**VEN210**
0.073...0.5 m³/h/ 2 K; 0.058...0.4 m³/h/ 1.5 K; 0.038...0.27 m³/h/ 1 K	Rp/R ½"	60	15	0.89	BPZ:VEN215	**VEN215**
0.22...0.7 m³/h/ 2 K; 0.17...0.55 m³/h/ 1.5 K; 0.11...0.36 m³/h/ 1 K	Rp/R ¾"	60	20	1.41	BPZ:VEN220	**VEN220**

Reverse angle valves PN10, NF design

VUN2..

Radiator valves for 2-pipe heating systems for room temperature control. Adjustable flow.
Permissible media: water (to VDI 2035), water with anti-freeze

The valves can be combined with Siemens actuators RTN../SSA.../STA..

Data sheet	N2106
Stroke	>1.2 mm
Medium	Water with anti-freeze
Medium temperature	1...120 °C
Permissible operating pressure	1000 kPa
Material, valve body	Brass, nickel-plated
PN class	PN 10
ΔP_{v100}	5...20 kPa
Warranty	60 Months

Range overview VUN2..

kv relation of Xp	Con-nect. thread	Δp_{max} [kPa]	DN	k_{vs} [m³/h]	Stock no.	Product no.
0.14...0.43 m³/h/ 2 K; 0.12...0.37 m³/h/ 1.5 K; 0.08...0.24 m³/h/ 1 K	Rp/R ⅜"	60	10	0.6	BPZ:VUN210	**VUN210**
0.13...0.5 m³/h/ 2 K; 0.11...0.43 m³/h/ 1.5 K; 0.07...0.28 m³/h/ 1 K	Rp/R ½"	60	15	0.77	BPZ:VUN215	**VUN215**

Combinable actuator for VDN2../VEN2../VUN2..

Operating voltage [V]	Positioning signal	Positioning time [s]	Cable length [m]	Data sheet	Stock no.	Product no.
AC 230	2-position	210	1	N4884	S55174-A101	**STA23**
AC 24	DC 0...10 V	270	2	N4884	S55174-A104	**STA63**
AC 24 DC 24	2-position PDM	270	1	N4884	S55174-A100	**STA73**
AC 24 DC 24	2-position PDM	270		N4884	S55174-A109	**STA73/00**
				N2111	BPZ:RTN51	**RTN51**
				N4211	BPZ:RTN51G	**RTN51G**
				N2111	BPZ:RTN71	**RTN71**
				N2111	BPZ:RTN81	**RTN81**
DC 21...30 24		50/100	1.5	A6V11858280	S55180-A111	**SSA118.09HKN**
3.0				A6V12789814	S55181-A105	**SSA911.02ZB**
AC/DC 24		270	1	A6V12968650	S55174-A177	**STA121**
AC 230		210	1	A6V12968650	S55174-A178	**STA321**
AC/DC 24		270	1	A6V12968650	S55174-A179	**STP121**
AC 230		210	1	A6V12968650	S55174-A180	**STP321**
AC 230	3-position	150	1.5	N4893	BPZ:SSA31.1	**SSA31.1**
AC 24	3-position	150	1.5	N4893	BPZ:SSA81.1	**SSA81.1**
AC 24	3-position	67.5	1.5	A6V11858276	S55180-A106	**SSA131.00**
AC 24 DC 24	4...20 mA	25	1.5	A6V11858278	S55180-A110	**SSA151.05HF**
AC 24 DC 24	DC 0...10 V	25	1.5	A6V11858276	S55180-A107	**SSA161.05**

Combinable actuator for VDN2../VEN2../VUN2..

Operating voltage [V]	Positioning signal	Positioning time [s]	Cable length [m]	Data sheet	Stock no.	Product no.
AC 24 DC 24	DC 0...10 V	25	1.5	A6V11858278	S55180-A108	**SSA161.05HF**
AC 24 DC 24	DC 0...10 V	25	1.5	A6V11858278	S55180-A109	**SSA161E.05HF**
AC 230	3-position	67.5	1.5	A6V11858276	S55180-A105	**SSA331.00**

ATN4

Manual knob, white, for VDN../VEN../VUN../VPD../VPE..

For manual adjustment of valve.
The manual knobs are suited for use with all types of valves of the VDN.../VEN.../VUN../VPD... and VPE.. ranges.
ATN4 package contains 50 pieces

Data sheet	N2100
Warranty	24 Months

Stock no.	Product no.
BPZ:ATN4	**ATN4**

ATN4 package contains 50 pieces

AVN1..-1..

Compression fittings for copper and soft steel pipes

For connecting copper or soft steel pipes to valves of the VDN../VEN../VUN.. ranges and lockshield valves of the ADN.../AEN... ranges

Data sheet	N2100
Warranty	24 Months

Range overview AVN1..-1..

Pipe diameter [mm]	Stock no.	Product no.
15	BPZ:AVN15-15	**AVN15-15**

AVN15A..

Compression fittings plastic pipes with aluminum foil

For connecting plastic pipes to valves of the VDN../VEN../VUN.. ranges and lockshield valves of the ADN.../AEN... ranges

Data sheet	N2100
Warranty	60 Months

Range overview AVN15A..

Pipe diameter [mm]	Stock no.	Product no.
16	BPZ:AVN15A16	**AVN15A16**

Two-port seat lockshield valves

ADN..

Lockshield valves with throttling function for hydraulic balancing and shut-off function when removing / replacing radiator.
Adjustable flow capacity

Data sheet	N2107
Medium	Water with anti-freeze
Medium temperature	1...120 °C
Permissible operating pressure	1000 kPa
Material, valve body	Brass, nickel-plated
PN class	PN 10
Valve design	Throughput
Warranty	60 Months

Range overview ADN..

K_v [m³/h]	Con-nect. thread	Δp_{max} [kPa]	DN	k_{vs} [m³/h]	Stock no.	Product no.
0...1.8	Rp/R ⅜"	60	10	0...1.8	BPZ:ADN10	**ADN10**
0...2.5	Rp/R ½"	60	15	0...2.5	BPZ:ADN15	**ADN15**
0...3	Rp/R ¾"	60	20	0...3	BPZ:ADN20	**ADN20**

Angle lockshield valves

AEN..

Lockshield valves with throttling function for hydraulic balancing and shut-off function when removing / replacing radiator.
Adjustable flow capacity

Data sheet	N2107
Medium	Water with anti-freeze
Medium temperature	1...120 °C
Permissible operating pressure	1000 kPa
Material, valve body	Brass, nickel-plated
PN class	PN 10
Valve design	Angle
Warranty	60 Months

Range overview AEN..

K_v [m³/h]	Con-nect. thread	Δp_{max} [kPa]	DN	k_{vs} [m³/h]	Stock no.	Product no.
0...1.8	Rp/R ⅜"	60	10	0...1.8	BPZ:AEN10	**AEN10**
0...2.5	Rp/R ½"	60	15	0...2.5	BPZ:AEN15	**AEN15**
0...3	Rp/R ¾"	60	20	0...3	BPZ:AEN20	**AEN20**

Globe and pressure independent control valve (PICV)
2-port threaded valves

VD1..CLC..

2-port small valves PN10, DIN, 2.5 mm stroke

Small valves with higher k_v-values, for use in ventilation and air conditioning systems for water-side control of chilled ceilings and terminal units in closed circuits. Adjustable flow capacity.
Permissible media: water (to VDI 2035), water with anti-freeze.

The valves can be combined with Siemens actuators SSA.../STA..

Data sheet	N2103
Stroke	2.5 mm
Medium temperature	1...110 °C
Permissible operating pressure	1000 kPa
Material, valve body	Brass, nickel-plated
PN class	PN 10
ΔP_{v100}	5...20 kPa
Warranty	60 Months

Range overview VD1..CLC..

K_v [m³/h]	Con-nect. thread	Δp_{max} [kPa]	DN	k_{vs} [m³/h]	Stock no.	Product no.
0.25...1.9	Rp/R ½"	150	15	1.9	BPZ:VD115CLC	**VD115CLC**
0.25...2.6	Rp/R ¾"	150	20	2.6	BPZ:VD120CLC	**VD120CLC**
0.25...2.6	Rp/R 1"	150	25	2.6	BPZ:VD125CLC	**VD125CLC**

Combinable actuator for VD1..CLC..

Operating voltage [V]	Positioning signal	Positioning time [s]	Cable length [m]	Data sheet	Stock no.	Product no.
AC 230	2-position	210	1	N4884	S55174-A101	**STA23**
AC 24	DC 0...10 V	270	2	N4884	S55174-A104	**STA63**
AC 24 DC 24	2-position PDM	270	1	N4884	S55174-A100	**STA73**
AC 24 DC 24	2-position PDM	270		N4884	S55174-A109	**STA73/00**
DC 21...30 24		50/100	1.5	A6V11858280	S55180-A111	**SSA118.09HKN**
AC 230	3-position	150	1.5	N4893	BPZ:SSA31.1	**SSA31.1**
AC 24	3-position	150	1.5	N4893	BPZ:SSA81.1	**SSA81.1**
AC 24	3-position	67.5	1.5	A6V11858276	S55180-A106	**SSA131.00**
AC 24 DC 24	4...20 mA	25	1.5	A6V11858278	S55180-A110	**SSA151.05HF**
AC 24 DC 24	DC 0...10 V	25	1.5	A6V11858276	S55180-A107	**SSA161.05**
AC 24 DC 24	DC 0...10 V	25	1.5	A6V11858278	S55180-A108	**SSA161.05HF**
AC 24 DC 24	DC 0...10 V	25	1.5	A6V11858278	S55180-A109	**SSA161E.05HF**
AC 230	3-position	67.5	1.5	A6V11858276	S55180-A105	**SSA331.00**

2-port seat valves, PN16

VVP45..

2-port valves with threaded connections for the control of terminal units, chilled ceilings or heating zones.
Suitable media: Water (to VDI 2035), water with anti-freeze.

V..P45.. valves are only used as mixing or 2-port valves, not as diverting valves.
V..P45..S are suitable for Conex® compression fittings.
VVP45..S and VMP45..S for k_{vs} values 0.63, 1, 1.6, 2.5 m³/h, datasheet N4854.

Data sheet	N4845
Stroke	5.5 mm
Leakage rate	0...0.02 % of k_{vs} value
Medium temperature	1...110 °C
Valve characteristic	Throughport up to k_{vs} 6.3: equal-percentage Throughport from k_{vs} 10: linear
Rangeability	From k_{vs}>6.3: >100 To k_{vs}=6.3: >50
Permissible operating pressure	1600 kPa
PN class	PN 16
Material, inside set	CrNi steel / Rg5 / brass
Warranty	60 Months

Range overview VVP45..

Con-nect. thread	SSB.. Δp_{max} [kPa]	SSB.. Δp_s [kPa]	SSC.. Δp_s [kPa]	SSC.. Δp_{max} [kPa]	DN	k_{vs} [m³/h]	Stock no.	Product no.
G ½" B	400	725			10	0.25	BPZ:VVP45.10-0.25	**VVP45.10-0.25**
G ½" B	400	725			10	0.4	BPZ:VVP45.10-0.4	**VVP45.10-0.4**
G ½" B	400	725			10	0.63	BPZ:VVP45.10-0.63	**VVP45.10-0.63**
G ½" B	400	725			10	1	BPZ:VVP45.10-1	**VVP45.10-1**
G ½" B	400	725			10	1.6	BPZ:VVP45.10-1.6	**VVP45.10-1.6**
G ¾" B	350	350			15	2.5	BPZ:VVP45.15-2.5	**VVP45.15-2.5**
G 1" B	350	350	350	350	20	4	BPZ:VVP45.20-4	**VVP45.20-4**
G 1¼" B	300	300	300	300	25	6.3	BPZ:VVP45.25-6.3	**VVP45.25-6.3**
G 1½" B			300	300	25	10	BPZ:VVP45.25-10	**VVP45.25-10**
G 2" B			175	175	32	16	BPZ:VVP45.32-16	**VVP45.32-16**
G 2¼" B			75	75	40	25	BPZ:VVP45.40-25	**VVP45.40-25**

Combinable actuator for VVP45..

Operating voltage [V]	Positioning signal	Positioning time	Data sheet	Stock no.	Product no.
AC 24 DC 24	DC 0...10 V	12.5 s for 2.5 mm stroke	A6V12681511	S55180-A134	**SSB161.05HF**
AC 24 DC 24	DC 0...10 V	12.5 s for 2.5 mm stroke	A6V12681511	S55180-A146	**SSB161.05HF/00**
AC 24 DC 24		12.5 s for 2.5 mm stroke	A6V13359034	S55180-A148	**SSB161.05UT**
AC 230	3-position	150 s	N4891	BPZ:SSB31	**SSB31**
AC 24 DC 24	DC 0...10 V	12.5 s for 2.5 mm stroke	A6V12681511	S55155-A101	**SSC161.05HF**
AC 24 DC 24	DC 0...10 V	12.5 s for 2.5 mm stroke	A6V12681511	S55180-A147	**SSC161.05HF/00**
AC 24 DC 24		12.5 s for 2.5 mm stroke	A6V13359035	S55180-A149	**SSC161.05UT**
AC/DC 24	DC 0...10 V	75 s	N4891	BPZ:SSB61	**SSB61**
AC 24	3-position	150 s	N4891	BPZ:SSB81	**SSB81**
AC 230	3-position	150 s	N4895	BPZ:SSC31	**SSC31**

Combinable actuator for VVP45..

Operating voltage [V]	Positioning signal	Positioning time	Data sheet	Stock no.	Product no.
AC/DC 24	DC 0...10 V	30 s	N4895	BPZ:SSC61	**SSC61**
AC/DC 24	DC 0...10 V	30 s	N4895	BPZ:SSC61.5	**SSC61.5**
AC 24	3-position	150 s	N4895	BPZ:SSC81	**SSC81**

Threaded 2-port seat valves, PN16

VVP45..N

In ventilation and air-conditioning systems for water-side terminal unit control in closed circuits, e.g. induction units, fan coil units, small reheaters and small re-coolers, for use in
- 2-pipe systems with one heat exchanger for heating and cooling
- 4-pipe systems with two separate heat exchangers for heating and cooling

With threaded connections to ISO 228-1.
For low temperature hot water, chilled water, water with anti-freeze.

Data sheet	N4840
Stroke	5.5 mm
Leakage rate	0...0.1 % of k_{vs} value
Medium	Water Water with anti-freeze
Medium temperature	1...110 °C
Valve characteristic	Equal percentage
Rangeability	> 50
Permissible operating pressure	1600 kPa
Material, inside set	CrNi steel, brass
PN class	PN 16
Warranty	60 Months

Range overview VVP45..N

Δp_{max} [kPa]	Δp_s [kPa]	DN	k_{vs} [m³/h]	Stock no.	Product no.
400	550	15	2.5	BPZ:VVP45.15-2.5N	**VVP45.15-2.5N**
400	550	20	4	BPZ:VVP45.20-4N	**VVP45.20-4N**
400	500	25	6.3	BPZ:VVP45.25-6.3N	**VVP45.25-6.3N**

Combinable actuator for VVP45..N

Operating voltage [V]	Positioning signal	Positioning time	Data sheet	Stock no.	Product no.
AC 24 DC 24		12.5 s for 2.5 mm stroke	A6V13359034	S55180-A148	**SSB161.05UT**
AC 24 DC 24	DC 0...10 V	12.5 s for 2.5 mm stroke	A6V12681511	S55155-A101	**SSC161.05HF**
AC 24 DC 24	DC 0...10 V	12.5 s for 2.5 mm stroke	A6V12681511	S55180-A147	**SSC161.05HF/00**
AC 24 DC 24		12.5 s for 2.5 mm stroke	A6V13359035	S55180-A149	**SSC161.05UT**
AC 230	3-position	150 s	N4895	BPZ:SSC31	**SSC31**
AC/DC 24	DC 0...10 V	30 s	N4895	BPZ:SSC61	**SSC61**
AC/DC 24	DC 0...10 V	30 s	N4895	BPZ:SSC61.5	**SSC61.5**
AC 24	3-position	150 s	N4895	BPZ:SSC81	**SSC81**

Globe and pressure independent control valve (PICV)
2-port threaded valves

VVP47..

2-port valves, PN16

2-port valves with threaded connections for the control of terminal units, chilled ceilings or heating zones.
Suitable media: Water (to VDI 2035), water with anti-freeze.

VXP47.. and VMP47.. 3-port valves are only used as mixing valves.
They are also suitable for SERTO® compression fittings.

Data sheet	N4847
Stroke	2.5 mm
Leakage rate	0...0.05 % of k_{vs} value
Medium	Water with anti-freeze
Medium temperature	1...110 °C
Valve characteristic	Throughport: linear Bypass: linear
Permissible operating pressure	1600 kPa
Material, valve body	Red brass CC491K (Rg5)
PN class	PN 16
Characteristic	linear
Material, inside set	CrNi steel, brass
Warranty	60 Months

Range overview VVP47..

STP.. Δp_{max} [kPa]	STP.. Δp_s [kPa]	SFP../SSP.. Δp_{max} [kPa]	SFP../SSP.. Δp_s [kPa]	Con-nect. thread	DN	k_{vs} [m³/h]	Stock no.	Product no.
400	700	400	1000	G ½" B	10	0.25	BPZ:VVP47.10-0.25	**VVP47.10-0.25**
400	700	400	1000	G ½" B	10	0.4	BPZ:VVP47.10-0.4	**VVP47.10-0.4**
250	250	400	500	G ½" B	10	0.63	BPZ:VVP47.10-0.63	**VVP47.10-0.63**
250	250	400	500	G ½" B	10	1	BPZ:VVP47.10-1	**VVP47.10-1**
150	150	300	300	G ½" B	10	1.6	BPZ:VVP47.10-1.6	**VVP47.10-1.6**
150	150	300	300	G ¾" B	15	2.5	BPZ:VVP47.15-2.5	**VVP47.15-2.5**
100	100	175	175	G 1" B	20	4	BPZ:VVP47.20-4	**VVP47.20-4**
250	250	400	500	G ½" B	10	1	BPZ:VVP47.10-1S	**VVP47.10-1S**
150	150	300	300	G ½" B	10	1.6	BPZ:VVP47.10-1.6S	**VVP47.10-1.6S**

VVP47..S for Conex compression fittings.

Combinable actuator for VVP47..

Operating voltage [V]	Positioning signal	Positioning time	Data sheet	Stock no.	Product no.
AC 24 DC 24	2-position PDM	270 s	N4884	S55174-A102	**STP73**
AC 230	2-position	10 s	N4865	BPZ:SFP21/18	**SFP21/18**
AC 24	2-position	10 s	N4865	BPZ:SFP71/18	**SFP71/18**
AC 24 DC 24	DC 0...10 V	12.5 s for 2.5 mm stroke	A6V12681511	S55180-A131	**SSF161.05HF**
AC 24 DC 24	DC 0...10 V	12.5 s for 2.5 mm stroke	A6V12681511	S55180-A145	**SSF161.05HF/00**
AC 230	3-position	150 s	N4864	BPZ:SSP31	**SSP31**
AC/DC 24	DC 0...10 V	34 s	N4864	BPZ:SSP61	**SSP61**
AC 24	3-position	150 s	N4864	BPZ:SSP81	**SSP81**

2-port zone valves, internally threaded, PN16, on/off characteristic

VVI46../2

2-port valves, internally threaded connections, for the control of zones or terminal units. Suitable media: water (to VDI 2035), water with anti-freeze.

Stroke	2.5 mm
Leakage rate	0...0.05% of rated valve capacity
Medium	Water Water with anti-freeze
Medium temperature	1...110 °C
Valve characteristic	Non-linear (on/off)
Permissible operating pressure	1600 kPa
Material, valve body	Hot-pressed brass
Material, inside set	Stainless steel, brass
PN class	PN 16
Warranty	60 Months

Range overview VVI46..

Con-nect. thread	STA.. Δp_{max} [kPa]	STA.. Δp_s [kPa]	SFA.. Δp_{max} [kPa]	SFA.. Δp_s [kPa]	SUA21.. Δp_{max} [kPa]	SUA21.. Δp_s [kPa]	SSA 31.04 Δp_s [kPa]	SSA 31.04 Δp_{max} [kPa]	DN	k_{vs} [m³/h]	Stock no.	Product no.
Rp ½"	200	200	300	300	400	400	300	300	15	2.15	S55249-V106	**VVI46.15/2**
Rp ¾"	200	200	300	300	400	400	300	300	20	3.5	S55249-V107	**VVI46.20/2**
Rp 1"	150	150	250	250	250	250	300	300	25	5	S55249-V108	**VVI46.25/2**

To ensure noiseless operation, Δp_{max} should not exceed 100 kPa.

Combinable actuator for VVI46..

Operating voltage [V]	Positioning signal	Positioning time [s]	Data sheet	Stock no.	Product no.
AC 230	2-position	210	N4884	S55174-A101	**STA23**
AC 24 DC 24	2-position PDM	270	N4884	S55174-A100	**STA73**
AC 24 DC 24	2-position PDM	270	N4884	S55174-A109	**STA73/00**
AC 230	2-position	10	N4863	BPZ:SFA21/18	**SFA21/18**
AC 24	2-position	10	N4863	BPZ:SFA71/18	**SFA71/18**
AC 230	3-position SPDT	43	N4860	BPZ:SSA31.04	**SSA31.04**
AC 230	2-position (SPST)	50 Hz:10 60 Hz:8.3	A6V10446174	S55176-A104	**SUA21/3**

Globe and pressure independent control valve (PICV)
2-port threaded valves

VVI47..

2-port seat valves, internally threaded connections, use in HVAC system as a control or safety shutoff valve. Suitable media: water (to VDI 2035), water with anti-freeze.

Data sheet	N4470
Stroke	20 mm
Leakage rate	0...0.02% of rated valve capacity
Medium	Water Water with anti-freeze
Valve characteristic	Equal percentage
Permissible operating pressure	1600 kPa
Material, inside set	Stainless steel, brass
PN class	PN 16
Warranty	60 Months

Range overview VVI47..

Con- nect. thread	SBX.. Δp_{max} [kPa]	SBX.. Δp_s [kPa]	DN	k_{vs} [m³/h]	Stock no.	Product no.
Rp ½"	400	1600	15	2.5	S55220-V113	**VVI47.15-2.5**

8

2-port seat valves PN16 with internally threaded connections

C/VVI41..

- With internally threaded connections Rp.. to ISO 7-1
- For chilled water, low pressure hot water and saturated steam in open and closed circuits

Data sheet	N4362
Stroke	20 mm
Leakage rate	0...0.02 % of k_{vs} value
Medium temperature	-25...150 °C
Valve characteristic	Equal-percentage
Rangeability	DN 15: >50 DN 20...50: >100
Permissible operating pressure	1600 kPa
Material, valve body	Bronze CC491K (Rg5)
Material, inside set	CrNi Steel/ Rg 5 brass
PN class	PN 16
Absolute pressure p1 steam	150 kPa abs
Warranty	60 Months

Range overview C/VVI41..

For customers in Asia / Australia

Con-nect. thread	SAX.. Δp_{max} [kPa]	SAX.. Δp_s [kPa]	SKD.. Δp_{max} [kPa]	SKD.. Δp_s [kPa]	DN	k_{vs} [m³/h]	Stock no.	Product no.
Rp ½"	400	1600	400	1600	15	2.5	BPZ:C/VVI41.15-2.5	**C/VVI41.15-2.5**
Rp ½"	400	1600	400	1600	15	4	BPZ:C/VVI41.15-4	**C/VVI41.15-4**
Rp ¾"	400	1600	400	1600	20	6.3	BPZ:C/VVI41.20-6.3	**C/VVI41.20-6.3**
Rp 1"	400	1550	400	1600	25	10	BPZ:C/VVI41.25-10	**C/VVI41.25-10**
Rp 1¼"	400	875	400	1275	32	16	BPZ:C/VVI41.32-16	**C/VVI41.32-16**
Rp 1½"	400	525	400	775	40	25	BPZ:C/VVI41.40-25	**C/VVI41.40-25**
Rp 2"	300	300	400	450	50	40	BPZ:C/VVI41.50-40	**C/VVI41.50-40**

Replacement sealing glands for C/VVI41..

Product Title	Data sheet	Stock no.	Product no.
Sealing gland complete, stem diameter 10 mm, sealing material EPDM, up to 150 °C		BPZ:428488740	**428488740**

Combinable actuator for C/VVI41..

Operating voltage [V]	Positioning signal	Positioning time [s]	Spring return function	Data sheet	Stock no.	Product no.
AC 230	3-position	120	no	N4501	S55150-A105	**SAX31.00**
AC 230	3-position	30	no	N4501	S55150-A106	**SAX31.03**
AC/DC 24	DC 0...10 V DC 4...20 mA 0...1000 Ohm	30	no	N4501	S55150-A100	**SAX61.03**
AC/DC 24	Modbus RTU	30	No	N4501	S55150-A140	**SAX61.03/MO**
AC/DC 24	3-position	120	no	N4501	S55150-A102	**SAX81.00**
AC/DC 24	3-position	30	no	N4501	S55150-A103	**SAX81.03**
AC 230	3-position	Open:30 Close:10	Yes (8 s)	N4561	BPZ:SKD32.21	**SKD32.21**
AC 230	3-position	120	No	N4561	BPZ:SKD32.50	**SKD32.50**
AC 230	3-position	120	Yes (8 s)	N4561	BPZ:SKD32.51	**SKD32.51**
AC 24	DC 0...10 V DC 4...20 mA 0...1000 Ohm	Open:30 Close:15	No	N4561	BPZ:SKD60	**SKD60**
AC 24	DC 0...10 V DC 4...20 mA 0...1000 Ohm	Open:30 Close:15	Yes (15 s)	N4561	BPZ:SKD62	**SKD62**

Combinable actuator for C/VVI41..

Operating voltage [V]	Positioning signal	Positioning time [s]	Spring return function	Data sheet	Stock no.	Product no.
AC 24	Modbus RTU	Open 30 Close 15	Yes	N4561	S55195-A129	**SKD62/MO**
AC 24 24	DC 0...10 V DC 4...20 mA 0...1000 Ohm	Open:30 Close:15	Yes (15 s)	N4561	BPZ:SKD62UA	**SKD62UA**
AC 24	3-position	120	No	N4561	BPZ:SKD82.50	**SKD82.50**
AC 24	3-position	120	Yes (8 s)	N4561	BPZ:SKD82.51	**SKD82.51**

2-port seat valves PN16 with externally threaded connections

VVG41..

- With threaded connections to ISO 228/1
- For cooling, chilled, low and high temperature water, brine and saturated and superheated steam in open and closed circuits

Data sheet	N4363
Stroke	20 mm
Leakage rate	0...0.02 % of k_{vs} value
Medium temperature	-25...150 °C
Valve characteristic	Equal percentage
Rangeability	DN 15: >50 DN 20...50: >100
Permissible operating pressure	1600 kPa
Material, valve body	Bronze CC499K (CuSn5Zn5Pb2)
Material, inside set	CrNi steel
PN class	PN 16
Absolute pressure p1 steam	300 kPa abs
Warranty	60 Months

Range overview VVG41..

Con-nect. thread	SAX.. Δp_{max} [kPa]	SAX.. Δp_s [kPa]	SKD.. Δp_{max} [kPa]	SKD.. Δp_s [kPa]	SKB.. Δp_{max} [kPa]	SKB.. Δp_s [kPa]	DN	k_{vs} [m³/h]	Stock no.	Product no.
G 1" B	800	1600	800	1600	800	1600	15	0.63	BPZ:VVG41.11	**VVG41.11**
G 1" B	800	1600	800	1600	800	1600	15	1	BPZ:VVG41.12	**VVG41.12**
G 1" B	800	1600	800	1600	800	1600	15	1.6	BPZ:VVG41.13	**VVG41.13**
G 1" B	800	1600	800	1600	800	1600	15	2.5	BPZ:VVG41.14	**VVG41.14**
G 1" B	800	1600	800	1600	800	1600	15	4	BPZ:VVG41.15	**VVG41.15**
G 1¼" B	800	1600	800	1600	800	1600	20	6.3	BPZ:VVG41.20	**VVG41.20**
G 1½" B	800	1550	800	1600	800	1600	25	10	BPZ:VVG41.25	**VVG41.25**
G 2" B	800	875	800	1275	800	1600	32	16	BPZ:VVG41.32	**VVG41.32**
G 2¼" B	525	525	775	775	800	1600	40	25	BPZ:VVG41.40	**VVG41.40**
G 2¾" B	300	300	450	450	800	1225	50	40	BPZ:VVG41.50	**VVG41.50**

ALG..2 fittings must be ordered as individual items and will be delivered seperately.

Replacement sealing glands for VVG41..

Product Title	Data sheet	Stock no.	Product no.
Sealing gland complete, stem diameter 10 mm, sealing material EPDM, up to 150 °C		BPZ:428488740	**428488740**

Accessories for VVG41..

Product Title	Data sheet	Stock no.	Product no.
Malleable cast iron fitting G 1" / Rp ½", set of 2	N4363	BPZ:ALG152	**ALG152**
Brass fitting G 1" / Rp ½", 100°C, set of 2	N4363	S55846-Z100	**ALG152B**
Malleable cast iron fitting G 1¼" / Rp ¾", set of 2	N4363	BPZ:ALG202	**ALG202**
Brass fitting G 1¼" / Rp ¾", 100 °C, set of 2	N4363	S55846-Z102	**ALG202B**
Malleable cast iron fitting G 1½" / Rp 1", set of 2	N4363	BPZ:ALG252	**ALG252**
Brass fitting G 1½" / Rp 1", 100 °C, set of 2	N4363	S55846-Z104	**ALG252B**
Malleable cast iron fitting G 2" / Rp 1¼", set of 2	N4363	BPZ:ALG322	**ALG322**
Brass fitting G 2" / Rp 1¼", 100 °C, set of 2	N4363	S55846-Z106	**ALG322B**
Malleable cast iron fitting G 2¼" / Rp 1½", set of 2	N4363	BPZ:ALG402	**ALG402**
Brass fitting G 2¼" / Rp 1½", 100 °C, set of 2	N4363	S55846-Z108	**ALG402B**
Malleable cast iron fitting G 2¾" / Rp 2", set of 2	N4363	BPZ:ALG502	**ALG502**
Brass fitting G 2 ¾" / Rp 2", 100 °C, set of 2	N4363	S55846-Z110	**ALG502B**

Combinable actuator for VVG41..

Operating voltage [V]	Positioning signal	Positioning time [s]	Spring return function	Data sheet	Stock no.	Product no.
AC 230	3-position	120	no	N4501	S55150-A105	**SAX31.00**
AC 230	3-position	30	no	N4501	S55150-A106	**SAX31.03**
AC/DC 24	DC 0...10 V DC 4...20 mA 0...1000 Ohm	30	no	N4501	S55150-A100	**SAX61.03**
AC/DC 24	Modbus RTU	30	No	N4501	S55150-A140	**SAX61.03/MO**
AC/DC 24	3-position	120	no	N4501	S55150-A102	**SAX81.00**
AC/DC 24	3-position	30	no	N4501	S55150-A103	**SAX81.03**
AC 230	3-position	Open:30 Close:10	Yes (8 s)	N4561	BPZ:SKD32.21	**SKD32.21**
AC 230	3-position	120	No	N4561	BPZ:SKD32.50	**SKD32.50**
AC 230	3-position	120	Yes (8 s)	N4561	BPZ:SKD32.51	**SKD32.51**
AC 24	DC 0...10 V DC 4...20 mA 0...1000 Ohm	Open:30 Close:15	No	N4561	BPZ:SKD60	**SKD60**
AC 24	DC 0...10 V DC 4...20 mA 0...1000 Ohm	Open:30 Close:15	Yes (15 s)	N4561	BPZ:SKD62	**SKD62**
AC 24	Modbus RTU	Open 30 Close 15	Yes	N4561	S55195-A129	**SKD62/MO**
AC 24 24	DC 0...10 V DC 4...20 mA 0...1000 Ohm	Open:30 Close:15	Yes (15 s)	N4561	BPZ:SKD62UA	**SKD62UA**
AC 24	3-position	120	No	N4561	BPZ:SKD82.50	**SKD82.50**
AC 24	3-position	120	Yes (8 s)	N4561	BPZ:SKD82.51	**SKD82.51**
AC 230	3-position	120	No	N4564	BPZ:SKB32.50	**SKB32.50**
AC 230	3-position	120	Yes (10 s)	N4564	BPZ:SKB32.51	**SKB32.51**
AC 24	DC 0...10 V 4...20 mA 0...1000 Ohm	Open:120 Close:10	No	N4564	BPZ:SKB60	**SKB60**
AC 24	DC 0...10 V 4...20 mA 0...1000 Ohm	Open:120 Close:10	Yes (10 s)	N4564	BPZ:SKB62	**SKB62**
AC 24	Modbus RTU	Open 120 Close 10	Yes	N4564	S55195-A127	**SKB62/MO**
AC 24 24	DC 0...10 V 4...20 mA 0...1000 Ohm	Open:120 Close:10	Yes (10 s)	N4564	BPZ:SKB62UA	**SKB62UA**
AC 24	3-position	120	No	N4564	BPZ:SKB82.50	**SKB82.50**
AC 24	3-position	120	Yes (10 s)	N4564	BPZ:SKB82.51	**SKB82.51**

2-port seat valves PN16 with externally threaded connections

VVG44..

- With threaded connections to ISO 228/1
- For chilled water and low-temperature hot water in closed circuits

Data sheet	N4364
Stroke	5.5 mm
Leakage rate	0...0.02 % of k_{vs} value
Medium temperature	1...120 °C
Valve characteristic	Linear
Rangeability	From DN 20: >100 DN 15: >50...100
Permissible operating pressure	1600 kPa
Material, valve body	Red brass CC491K (Rg5)
Material, inside set	CrNi steel / Rg5, brass
PN class	PN 16
Warranty	60 Months

Range overview VVG44..

DN	Con-nect. thread	SAS.. Δp_s [kPa]	SAS.. Δp_{max} [kPa]	k_{vs} [m³/h]	Stock no.	Product no.
15	G 1" B	1600	400	0.25	BPZ:VVG44.15-0.25	**VVG44.15-0.25**
15	G 1" B	1600	400	0.4	BPZ:VVG44.15-0.4	**VVG44.15-0.4**
15	G 1" B	1600	400	0.63	BPZ:VVG44.15-0.63	**VVG44.15-0.63**
15	G 1" B	725	400	1	BPZ:VVG44.15-1	**VVG44.15-1**
15	G 1" B	725	400	1.6	BPZ:VVG44.15-1.6	**VVG44.15-1.6**
15	G 1" B	400	400	2.5	BPZ:VVG44.15-2.5	**VVG44.15-2.5**
15	G 1" B	400	400	4	BPZ:VVG44.15-4	**VVG44.15-4**
20	G 1¼" B	750	400	6.3	BPZ:VVG44.20-6.3	**VVG44.20-6.3**
25	G 1½" B	400	400	10	BPZ:VVG44.25-10	**VVG44.25-10**
32	G 2" B	250	250	16	BPZ:VVG44.32-16	**VVG44.32-16**
40	G 2¼" B	125	125	25	BPZ:VVG44.40-25	**VVG44.40-25**

Fittings ALG..2 must be ordered as separae items and are also supplied as such.

Accessories for VVG44..

Product Title	Data sheet	Stock no.	Product no.
Malleable cast iron fitting G 1" / Rp ½", set of 2	N4363	BPZ:ALG152	**ALG152**
Brass fitting G 1" / Rp ½", 100°C, set of 2	N4363	S55846-Z100	**ALG152B**
Malleable cast iron fitting G 1¼" / Rp ¾", set of 2	N4363	BPZ:ALG202	**ALG202**
Brass fitting G 1¼" / Rp ¾", 100 °C, set of 2	N4363	S55846-Z102	**ALG202B**
Malleable cast iron fitting G 1½" / Rp 1", set of 2	N4363	BPZ:ALG252	**ALG252**
Brass fitting G 1½" / Rp 1", 100 °C, set of 2	N4363	S55846-Z104	**ALG252B**
Malleable cast iron fitting G 2" / Rp 1¼", set of 2	N4363	BPZ:ALG322	**ALG322**
Brass fitting G 2" / Rp 1¼", 100 °C, set of 2	N4363	S55846-Z106	**ALG322B**
Malleable cast iron fitting G 2¼" / Rp 1½", set of 2	N4363	BPZ:ALG402	**ALG402**
Brass fitting G 2¼" / Rp 1½", 100 °C, set of 2	N4363	S55846-Z108	**ALG402B**

Combinable actuator for VVG44..

Operating voltage [V]	Positioning signal	Positioning time [s]	Spring return function	Data sheet	Stock no.	Product no.
AC 230	3-position	120	No	N4581	S55158-A106	**SAS31.00**
AC 230	3-position	30	No	N4581	S55158-A107	**SAS31.03**
AC 230	3-position	120	Yes (28 s)	N4581	S55158-A108	**SAS31.50**
AC 230	3-position	30	Yes (14 s)	N4581	S55158-A109	**SAS31.53**

Combinable actuator for VVG44..

Operating voltage [V]	Positioning signal	Positioning time [s]	Spring return function	Data sheet	Stock no.	Product no.
AC/DC 24	DC 0...10 V DC 4...20 mA 0...1000 Ohm	30	No	N4581	S55158-A100	**SAS61.03**
AC/DC 24	Modbus RTU	30		N4581	S55158-A121	**SAS61.03/MO**
AC/DC 24	DC 0...10 V DC 4...20 mA 0...1000 Ohm	30	Yes (14 s)	N4581	S55158-A101	**SAS61.33**
AC/DC 24	Modbus RTU	30	Yes (14 s)	N4581	S55158-A122	**SAS61.33/MO**
AC/DC 24	DC 0...10 V DC 4...20 mA 0...1000 Ohm	30	Yes (14 s)	N4581	S55158-A102	**SAS61.53**
AC/DC 24	3-position	120	No	N4581	S55158-A103	**SAS81.00**
AC/DC 24	3-position	30	No	N4581	S55158-A104	**SAS81.03**
AC/DC 24	3-position	30	Yes (14 s)	N4581	S55158-A105	**SAS81.33**

2-port seat valves, externally threaded, PN25

VVG549..

- With threaded connections to ISO 228/1
- For chilled water and low-temperature hot water in closed circuits, especially for district heat applications

Data sheet	CA1Q4380
Medium temperature	1...150 °C
PN class	PN 25
Warranty	60 Months

Range overview VVG549..

Con-nect. thread	SAT.. Δp_s [kPa]	SAT.. Δp_{max} [kPa]	SAS.. Δp_s [kPa]	SAS.. Δp_{max} [kPa]	DN	k_{vs} [m³/h]	Stock no.	Product no.
G ¾" B	2500	1200	2500	1200	15	0.25	BPZ:VVG549.15-0.25	**VVG549.15-0.25**
G ¾" B	2500	1200	2500	1200	15	0.4	BPZ:VVG549.15-0.4	**VVG549.15-0.4**
G ¾" B	2500	1200	2500	1200	15	0.63	BPZ:VVG549.15-0.63	**VVG549.15-0.63**
G ¾" B	1500	1200	2000	1200	15	1	BPZ:VVG549.15-1	**VVG549.15-1**
G ¾" B	1500	1200	2000	1200	15	1.6	BPZ:VVG549.15-1.6	**VVG549.15-1.6**
G ¾" B	1500	1200	2000	1200	15	2.5	BPZ:VVG549.15-2.5	**VVG549.15-2.5**
G 1" B	1600	1200	1600	1200	20	4	BPZ:VVG549.20-4K	**VVG549.20-4K**
G 1¼" B	1600	1200	1600	1200	25	6.3	BPZ:VVG549.25-6.3K	**VVG549.25-6.3K**

Accessories for VVG549..

Product Title	Data sheet	Stock no.	Product no.
Fittings, pipe-side with threaded connection		BPZ:ALG..2	**ALG..2**
Fittings, pipeside with welding connection		BPZ:ALS..	**ALS..**

Combinable actuator for VVG549..

Operating voltage [V]	Positioning signal	Positioning time [s]	Spring return function	Data sheet	Stock no.	Product no.
AC 230	3-position	8	No	N4584	S55158-A119	**SAT31.008**
AC 230	3-position	15	Yes (8 s)	N4584	S55158-A120	**SAT31.51**
AC/DC 24	DC 0...10 V DC 4...20 mA 0...1000 Ohm	8	No	N4584	S55158-A117	**SAT61.008**
AC/DC 24	Modbus RTU	8	No	N4584	S55158-A123	**SAT61.008/MO**
AC/DC 24	DC 0...10 V DC 4...20 mA 0...1000 Ohm	15	Yes (8 s)	N4584	S55158-A118	**SAT61.51**
AC/DC 24	Modbus RTU	15	Yes (8 s)	N4584	S55158-A124	**SAT61.51/MO**
AC 230	3-position	120	No	N4581	S55158-A106	**SAS31.00**
AC 230	3-position	30	No	N4581	S55158-A107	**SAS31.03**
AC 230	3-position	120	Yes (28 s)	N4581	S55158-A108	**SAS31.50**
AC 230	3-position	30	Yes (14 s)	N4581	S55158-A109	**SAS31.53**
AC/DC 24	DC 0...10 V DC 4...20 mA 0...1000 Ohm	30	No	N4581	S55158-A100	**SAS61.03**
AC/DC 24	DC 0...10 V DC 4...20 mA 0...1000 Ohm	30	Yes (14 s)	N4581	S55158-A101	**SAS61.33**
AC/DC 24	DC 0...10 V DC 4...20 mA 0...1000 Ohm	30	Yes (14 s)	N4581	S55158-A102	**SAS61.53**

Combinable actuator for VVG549..

Operating voltage [V]	Positioning signal	Positioning time [s]	Spring return function	Data sheet	Stock no.	Product no.
AC/DC 24	3-position	120	No	N4581	S55158-A103	**SAS81.00**
AC/DC 24	3-position	30	No	N4581	S55158-A104	**SAS81.03**
AC/DC 24	3-position	30	Yes (14 s)	N4581	S55158-A105	**SAS81.33**

Fittings, pipe-side with threaded connection

ALG..2

Cylindric thread to ISO 228-1 on the valve side. Tapered R-externally or cylindrical Rp-internally threaded to ISO 7-1 on the pipe side.
Each fitting set ALG..2 consists of 2 cap nuts, 2 insert nuts and 2 flat seals.

Warranty	24 Months

Range overview ALG..2

Connecting thread, valve side	Connecting thread, pipe side ["]	Material	Stock no.	Product no.
G ¾ "	Rp ⅜	Malleable cast iron, phosphated	BPZ:ALG122	**ALG122**
G ½ "	R ⅜	Brass	BPZ:ALG132	**ALG132**
G ¾ "	R ½	Brass	BPZ:ALG142	**ALG142**
G 1 "	Rp ½	Malleable cast iron, phosphated	BPZ:ALG152	**ALG152**
G 1 "	Rp ½	Brass	S55846-Z100	**ALG152B**
G 1¼ "	Rp ¾	Malleable cast iron, phosphated	BPZ:ALG202	**ALG202**
G 1¼ "	Rp ¾	Brass	S55846-Z102	**ALG202B**
G 1½ "	Rp 1	Malleable cast iron, phosphated	BPZ:ALG252	**ALG252**
G 1½ "	Rp 1	Brass	S55846-Z104	**ALG252B**
G 2 "	Rp 1¼	Malleable cast iron, phosphated	BPZ:ALG322	**ALG322**
G 2 "	Rp 1¼	Brass	S55846-Z106	**ALG322B**
G 2¼ "	Rp 1½	Malleable cast iron, phosphated	BPZ:ALG402	**ALG402**
G 2¼ "	Rp 1½	Brass	S55846-Z108	**ALG402B**
G 2¾ "	Rp 2	Malleable cast iron, phosphated	BPZ:ALG502	**ALG502**
G 2¾ "	Rp 2	Brass	S55846-Z110	**ALG502B**

ALG132 and ALG142: pipe connecting thread externally threaded.
For the VMP45.. and VMP47.. valves, 2 sets of 2 fittings must be ordered

Fittings, pipeside with welding connection

ALS..

Cylindric thread to ISO 228-1 on valve side. Welded connection on the pipe side.
Each ALS.. set consists of 2 cap nuts, 2 inserts and 2 flat seals.

Warranty	60 Months

Fittings with weldable connections: Set of 2

Pipe diameter [mm]	Connecting thread, valve side ["]	Stock no.	Product no.
21.3	G ¾	BPZ:ALS152	**ALS152**
26.8	G 1	BPZ:ALS202	**ALS202**
33.7	G 1¼	BPZ:ALS252	**ALS252**

Globe and pressure independent control valve (PICV)
3-port flanged valves

VXF22..

3-port valves with flanged connections, PN 6

- With flanged connections to ISO 7005
- For chilled, low and high temperature water and brine in closed circuits

Data sheet	N4401
Stroke	to DN80: 20 mm DN100: 40 mm
Leakage rate	0...0.02% of the kvs value
Leakage rate bypass	0.5...2 % of the k_{vs}-value
Medium temperature	-10...130 °C
Valve characteristic	Through-port: equal percentage Bypass: linear
Rangeability	DN 25: >50 DN 40...100: >100
Permissible operating pressure	600 kPa
Material, valve body	Cast iron EN-GJL-250
Material, inside set	≤ DN40: CrNi steel / brass ≥ DN50: CrNi steel / bronze
PN class	PN 6
Warranty	60 Months

Range overview VXF22..

SAX.. Δp_{max} [kPa]	SAV.. Δp_{max} [kPa]	SKD.. Δp_{max} [kPa]	SKB.. Δp_{max} [kPa]	SKC.. Δp_{max} [kPa]	DN	k_{vs} [m³/h]	Stock no.	Product no.
300		300	300		25	2.5	S55200-V110	**VXF22.25-2.5**
300		300	300		25	4	S55200-V111	**VXF22.25-4**
300		300	300		25	6.3	S55200-V112	**VXF22.25-6.3**
300		300	300		25	10	S55200-V113	**VXF22.25-10**
300	300	300	300		40	16	S55200-V114	**VXF22.40-16**
300	300	300	300		40	25	S55200-V115	**VXF22.40-25**
300	300	300	300		50	40	S55200-V116	**VXF22.50-40**
150	300	200	300		65	63	S55200-V117	**VXF22.65-63**
75	225	125	300		80	100	S55200-V118	**VXF22.80-100**
	125			250	100	160	S55200-V119	**VXF22.100-160**

Δp_{max}-ratings are valid for mixing applications.

Replacement sealing glands for VXF22..

Product Title	Data sheet	Stock no.	Product no.
Sealing gland complete, stem diameter 10 mm, sealing material EPDM		BPZ:428488060	**428488060**
Sealing gland complete, stem diameter 14 mm, sealing material EPDM, up to 150 °C		BPZ:467956290	**467956290**

8

Combinable actuator for VXF22..

Operating voltage [V]	Positioning signal	Positioning time [s]	Spring return function	Data sheet	Stock no.	Product no.
AC 230	3-position	120	no	N4501	S55150-A105	**SAX31.00**
AC 230	3-position	30	no	N4501	S55150-A106	**SAX31.03**
AC/DC 24	DC 0...10 V DC 4...20 mA 0...1000 Ohm	30	no	N4501	S55150-A100	**SAX61.03**
AC/DC 24	Modbus RTU	30	No	N4501	S55150-A140	**SAX61.03/MO**
AC/DC 24	3-position	120	no	N4501	S55150-A102	**SAX81.00**
AC/DC 24	3-position	30	no	N4501	S55150-A103	**SAX81.03**
AC 230	3-position	120	No	N4503	S55150-A112	**SAV31.00**

Combinable actuator for VXF22..

Operating voltage [V]	Positioning signal	Positioning time [s]	Spring return function	Data sheet	Stock no.	Product no.
AC/DC 24	DC 0...10 V DC 4...20 mA 0...1000 Ohm	120	No	N4503	S55150-A110	**SAV61.00**
AC/DC 24	Modbus RTU	120	No	N4503	S55150-A141	**SAV61.00/MO**
AC/DC 24	3-position	120	No	N4503	S55150-A111	**SAV81.00**
AC 230	3-position	Open:30 Close:10	Yes (8 s)	N4561	BPZ:SKD32.21	**SKD32.21**
AC 230	3-position	120	No	N4561	BPZ:SKD32.50	**SKD32.50**
AC 230	3-position	120	Yes (8 s)	N4561	BPZ:SKD32.51	**SKD32.51**
AC 24	DC 0...10 V DC 4...20 mA 0...1000 Ohm	Open:30 Close:15	No	N4561	BPZ:SKD60	**SKD60**
AC 24	DC 0...10 V DC 4...20 mA 0...1000 Ohm	Open:30 Close:15	Yes (15 s)	N4561	BPZ:SKD62	**SKD62**
AC 24	Modbus RTU	Open 30 Close 15	Yes	N4561	S55195-A129	**SKD62/MO**
AC 24 24	DC 0...10 V DC 4...20 mA 0...1000 Ohm	Open:30 Close:15	Yes (15 s)	N4561	BPZ:SKD62UA	**SKD62UA**
AC 24	3-position	120	No	N4561	BPZ:SKD82.50	**SKD82.50**
AC 24	3-position	120	Yes (8 s)	N4561	BPZ:SKD82.51	**SKD82.51**
AC 230	3-position	120	No	N4564	BPZ:SKB32.50	**SKB32.50**
AC 230	3-position	120	Yes (10 s)	N4564	BPZ:SKB32.51	**SKB32.51**
AC 24	DC 0...10 V 4...20 mA 0...1000 Ohm	Open:120 Close:10	No	N4564	BPZ:SKB60	**SKB60**
AC 24	DC 0...10 V 4...20 mA 0...1000 Ohm	Open:120 Close:10	Yes (10 s)	N4564	BPZ:SKB62	**SKB62**
AC 24	Modbus RTU	Open 120 Close 10	Yes	N4564	S55195-A127	**SKB62/MO**
AC 24 24	DC 0...10 V 4...20 mA 0...1000 Ohm	Open:120 Close:10	Yes (10 s)	N4564	BPZ:SKB62UA	**SKB62UA**
AC 24	3-position	120	No	N4564	BPZ:SKB82.50	**SKB82.50**
AC 24	3-position	120	Yes (10 s)	N4564	BPZ:SKB82.51	**SKB82.51**
AC 230	3-position	120	No	N4566	BPZ:SKC32.60	**SKC32.60**
AC 230	3-position	120	Yes (18 s)	N4566	BPZ:SKC32.61	**SKC32.61**
AC 24	DC 0...10 V 4...20 mA 0...1000 Ohm	Open:120 Close:20	No	N4566	BPZ:SKC60	**SKC60**
AC 24	DC 0...10 V 4...20 mA 0...1000 Ohm	Open:120 Close:20	Yes (20 s)	N4566	BPZ:SKC62	**SKC62**
AC 24	Modbus RTU	Open 120 Close 20	Yes	N4566	S55195-A128	**SKC62/MO**
AC 24 24	DC 0...10 V 4...20 mA 0...1000 Ohm	Open:120 Close:20	Yes (20 s)	N4566	BPZ:SKC62UA	**SKC62UA**
AC 24	3-position	120	No	N4566	BPZ:SKC82.60	**SKC82.60**
AC 24	3-position	120	Yes (18 s)	N4566	BPZ:SKC82.61	**SKC82.61**

Globe and pressure independent control valve (PICV)
3-port flanged valves

VXF32..

3-port valves with flanged connections, PN10

- With flanged connections to ISO 7005
- For chilled, low and high temperature water and brine in closed circuits

Data sheet	N4402
Stroke	to DN80: 20 mm from DN100: 40 mm
Leakage rate	0...0.02% of the kvs value
Leakage rate bypass	0.5...2 % of the k_{vs}-value
Medium temperature	-10...150 °C
Valve characteristic	Through-port: equal percentage Through-port: k_{vs} 250/400 linear Bypass: linear
Rangeability	DN 15 .. 25: >50 DN 40...150: >100
Permissible operating pressure	1000 kPa
Material, valve body	Cast iron EN-GJL-250
Material, inside set	≤ DN40: CrNi steel / brass ≥ DN50: CrNi steel / bronze
PN class	PN 10
Warranty	60 Months

Range overview VXF32..

SAX.. Δp_{max} [kPa]	SAV.. Δp_{max} [kPa]	SKD.. Δp_{max} [kPa]	SKB.. Δp_{max} [kPa]	SKC.. Δp_{max} [kPa]	DN	k_{vs} [m³/h]	Stock no.	Product no.
400		400	400		15	1.6	S55202-V113	**VXF32.15-1.6**
400		400	400		15	2.5	S55202-V114	**VXF32.15-2.5**
400		400	400		15	4	S55202-V115	**VXF32.15-4**
400		400	400		25	6.3	S55202-V116	**VXF32.25-6.3**
400		400	400		25	10	S55202-V117	**VXF32.25-10**
400	400	400	400		40	16	S55202-V118	**VXF32.40-16**
400	400	400	400		40	25	S55202-V119	**VXF32.40-25**
300	400	400	400		50	40	S55202-V120	**VXF32.50-40**
150	400	200	400		65	63	S55202-V121	**VXF32.65-63**
75	225	125	400		80	100	S55202-V122	**VXF32.80-100**
	125			250	100	160	S55202-V123	**VXF32.100-160**
	90			160	125	250	S55202-V124	**VXF32.125-250**
	60			100	150	400	S55202-V125	**VXF32.150-400**

Δp_{max}-ratings are valid for mixing applications.

8

Replacement sealing glands for VXF32..

Product Title	Data sheet	Stock no.	Product no.
Sealing gland complete, stem diameter 10 mm, sealing material EPDM		BPZ:428488060	**428488060**
Sealing gland complete, stem diameter 14 mm, sealing material EPDM, up to 150 °C		BPZ:467956290	**467956290**

Combinable actuator for VXF32..

Operating voltage [V]	Positioning signal	Positioning time [s]	Spring return function	Data sheet	Stock no.	Product no.
AC 230	3-position	120	no	N4501	S55150-A105	**SAX31.00**
AC 230	3-position	30	no	N4501	S55150-A106	**SAX31.03**
AC/DC 24	DC 0...10 V DC 4...20 mA 0...1000 Ohm	30	no	N4501	S55150-A100	**SAX61.03**
AC/DC 24	Modbus RTU	30	No	N4501	S55150-A140	**SAX61.03/MO**
AC/DC 24	3-position	120	no	N4501	S55150-A102	**SAX81.00**

Combinable actuator for VXF32..

Operating voltage [V]	Positioning signal	Positioning time [s]	Spring return function	Data sheet	Stock no.	Product no.
AC/DC 24	3-position	30	no	N4501	S55150-A103	**SAX81.03**
AC 230	3-position	120	No	N4503	S55150-A112	**SAV31.00**
AC/DC 24	DC 0...10 V DC 4...20 mA 0...1000 Ohm	120	No	N4503	S55150-A110	**SAV61.00**
AC/DC 24	Modbus RTU	120	No	N4503	S55150-A141	**SAV61.00/MO**
AC/DC 24	3-position	120	No	N4503	S55150-A111	**SAV81.00**
AC 230	3-position	Open:30 Close:10	Yes (8 s)	N4561	BPZ:SKD32.21	**SKD32.21**
AC 230	3-position	120	No	N4561	BPZ:SKD32.50	**SKD32.50**
AC 230	3-position	120	Yes (8 s)	N4561	BPZ:SKD32.51	**SKD32.51**
AC 24	DC 0...10 V DC 4...20 mA 0...1000 Ohm	Open:30 Close:15	No	N4561	BPZ:SKD60	**SKD60**
AC 24	DC 0...10 V DC 4...20 mA 0...1000 Ohm	Open:30 Close:15	Yes (15 s)	N4561	BPZ:SKD62	**SKD62**
AC 24	Modbus RTU	Open 30 Close 15	Yes	N4561	S55195-A129	**SKD62/MO**
AC 24 24	DC 0...10 V DC 4...20 mA 0...1000 Ohm	Open:30 Close:15	Yes (15 s)	N4561	BPZ:SKD62UA	**SKD62UA**
AC 24	3-position	120	No	N4561	BPZ:SKD82.50	**SKD82.50**
AC 24	3-position	120	Yes (8 s)	N4561	BPZ:SKD82.51	**SKD82.51**
AC 230	3-position	120	No	N4564	BPZ:SKB32.50	**SKB32.50**
AC 230	3-position	120	Yes (10 s)	N4564	BPZ:SKB32.51	**SKB32.51**
AC 24	DC 0...10 V 4...20 mA 0...1000 Ohm	Open:120 Close:10	No	N4564	BPZ:SKB60	**SKB60**
AC 24	DC 0...10 V 4...20 mA 0...1000 Ohm	Open:120 Close:10	Yes (10 s)	N4564	BPZ:SKB62	**SKB62**
AC 24	Modbus RTU	Open 120 Close 10	Yes	N4564	S55195-A127	**SKB62/MO**
AC 24 24	DC 0...10 V 4...20 mA 0...1000 Ohm	Open:120 Close:10	Yes (10 s)	N4564	BPZ:SKB62UA	**SKB62UA**
AC 24	3-position	120	No	N4564	BPZ:SKB82.50	**SKB82.50**
AC 24	3-position	120	Yes (10 s)	N4564	BPZ:SKB82.51	**SKB82.51**
AC 230	3-position	120	No	N4566	BPZ:SKC32.60	**SKC32.60**
AC 230	3-position	120	Yes (18 s)	N4566	BPZ:SKC32.61	**SKC32.61**
AC 24	DC 0...10 V 4...20 mA 0...1000 Ohm	Open:120 Close:20	No	N4566	BPZ:SKC60	**SKC60**
AC 24	DC 0...10 V 4...20 mA 0...1000 Ohm	Open:120 Close:20	Yes (20 s)	N4566	BPZ:SKC62	**SKC62**
AC 24	Modbus RTU	Open 120 Close 20	Yes	N4566	S55195-A128	**SKC62/MO**
AC 24 24	DC 0...10 V 4...20 mA 0...1000 Ohm	Open:120 Close:20	Yes (20 s)	N4566	BPZ:SKC62UA	**SKC62UA**
AC 24	3-position	120	No	N4566	BPZ:SKC82.60	**SKC82.60**
AC 24	3-position	120	Yes (18 s)	N4566	BPZ:SKC82.61	**SKC82.61**

Globe and pressure independent control valve (PICV)
3-port flanged valves

VXF42..

3-port valves with flanged connections, PN 16

- With flanged connections to ISO 7005
- For chilled, low and high temperature water and brine in closed circuits

Data sheet	N4403
Stroke	to DN80: 20 mm from DN100: 40 mm
Leakage rate	0...0.02% of the kvs value
Leakage rate bypass	0.5...2 % of the k_{vs}-value
Medium temperature	-10...150 °C
Valve characteristic	Through-port: equal percentage Through-port: k_{vs} 250/400 linear Bypass: linear
Rangeability	DN 15...25: >50 DN 32...150: >100
Permissible operating pressure	1600 kPa
Material, valve body	Cast iron EN-GJL-250
Material, inside set	≤ DN40: CrNi steel / brass ≥ DN50: CrNi steel / bronze
PN class	PN 16
Warranty	60 Months

Range overview VXF42..

SAX.. Δp_{max} [kPa]	SAV.. Δp_{max} [kPa]	SKD.. Δp_{max} [kPa]	SKB.. Δp_{max} [kPa]	SKC.. Δp_{max} [kPa]	DN	k_{vs} [m³/h]	Stock no.	Product no.
400		400	400		15	1.6	S55204-V127	**VXF42.15-1.6**
400		400	400		15	2.5	S55204-V128	**VXF42.15-2.5**
400		400	400		15	4	S55204-V129	**VXF42.15-4**
400		400	400		20	6.3	S55204-V130	**VXF42.20-6.3**
400		400	400		25	6.3	S55204-V131	**VXF42.25-6.3**
400		400	400		25	10	S55204-V132	**VXF42.25-10**
400		400	400		32	16	S55204-V133	**VXF42.32-16**
400	400	400	400		40	16	S55204-V134	**VXF42.40-16**
400	400	400	400		40	25	S55204-V135	**VXF42.40-25**
300	400	400	400		50	31.5	S55204-V136	**VXF42.50-31.5**
300	400	400	400		50	40	S55204-V137	**VXF42.50-40**
150	400	200	400		65	50	S55204-V138	**VXF42.65-50**
150	400	200	400		65	63	S55204-V139	**VXF42.65-63**
75	225	125	400		80	80	S55204-V140	**VXF42.80-80**
75	225	125	400		80	100	S55204-V141	**VXF42.80-100**
	125			250	100	125	S55204-V142	**VXF42.100-125**
	125			250	100	160	S55204-V143	**VXF42.100-160**
	90			160	125	200	S55204-V144	**VXF42.125-200**
	90			160	125	250	S55204-V145	**VXF42.125-250**
	60			100	150	315	S55204-V146	**VXF42.150-315**
	60			100	150	400	S55204-V147	**VXF42.150-400**

Δp_{max}-ratings are valid for mixing applications.

Replacement sealing glands for VXF42..

Product Title	Data sheet	Stock no.	Product no.
Sealing gland complete, stem diameter 10 mm, sealing material EPDM		BPZ:428488060	**428488060**
Sealing gland complete, stem diameter 14 mm, sealing material EPDM, up to 150 °C		BPZ:467956290	**467956290**

Combinable actuator for VXF42..

Operating voltage [V]	Positioning signal	Positioning time [s]	Spring return function	Data sheet	Stock no.	Product no.
AC 230	3-position	120	no	N4501	S55150-A105	**SAX31.00**
AC 230	3-position	30	no	N4501	S55150-A106	**SAX31.03**
AC/DC 24	DC 0...10 V DC 4...20 mA 0...1000 Ohm	30	no	N4501	S55150-A100	**SAX61.03**
AC/DC 24	Modbus RTU	30	No	N4501	S55150-A140	**SAX61.03/MO**
AC/DC 24	3-position	120	no	N4501	S55150-A102	**SAX81.00**
AC/DC 24	3-position	30	no	N4501	S55150-A103	**SAX81.03**
AC 230	3-position	120	No	N4503	S55150-A112	**SAV31.00**
AC/DC 24	DC 0...10 V DC 4...20 mA 0...1000 Ohm	120	No	N4503	S55150-A110	**SAV61.00**
AC/DC 24	Modbus RTU	120	No	N4503	S55150-A141	**SAV61.00/MO**
AC/DC 24	3-position	120	No	N4503	S55150-A111	**SAV81.00**
AC 230	3-position	Open:30 Close:10	Yes (8 s)	N4561	BPZ:SKD32.21	**SKD32.21**
AC 230	3-position	120	No	N4561	BPZ:SKD32.50	**SKD32.50**
AC 230	3-position	120	Yes (8 s)	N4561	BPZ:SKD32.51	**SKD32.51**
AC 24	DC 0...10 V DC 4...20 mA 0...1000 Ohm	Open:30 Close:15	No	N4561	BPZ:SKD60	**SKD60**
AC 24	DC 0...10 V DC 4...20 mA 0...1000 Ohm	Open:30 Close:15	Yes (15 s)	N4561	BPZ:SKD62	**SKD62**
AC 24	Modbus RTU	Open 30 Close 15	Yes	N4561	S55195-A129	**SKD62/MO**
AC 24 24	DC 0...10 V DC 4...20 mA 0...1000 Ohm	Open:30 Close:15	Yes (15 s)	N4561	BPZ:SKD62UA	**SKD62UA**
AC 24	3-position	120	No	N4561	BPZ:SKD82.50	**SKD82.50**
AC 24	3-position	120	Yes (8 s)	N4561	BPZ:SKD82.51	**SKD82.51**
AC 230	3-position	120	No	N4564	BPZ:SKB32.50	**SKB32.50**
AC 230	3-position	120	Yes (10 s)	N4564	BPZ:SKB32.51	**SKB32.51**
AC 24	DC 0...10 V 4...20 mA 0...1000 Ohm	Open:120 Close:10	No	N4564	BPZ:SKB60	**SKB60**
AC 24	DC 0...10 V 4...20 mA 0...1000 Ohm	Open:120 Close:10	Yes (10 s)	N4564	BPZ:SKB62	**SKB62**
AC 24	Modbus RTU	Open 120 Close 10	Yes	N4564	S55195-A127	**SKB62/MO**
AC 24 24	DC 0...10 V 4...20 mA 0...1000 Ohm	Open:120 Close:10	Yes (10 s)	N4564	BPZ:SKB62UA	**SKB62UA**
AC 24	3-position	120	No	N4564	BPZ:SKB82.50	**SKB82.50**
AC 24	3-position	120	Yes (10 s)	N4564	BPZ:SKB82.51	**SKB82.51**
AC 230	3-position	120	No	N4566	BPZ:SKC32.60	**SKC32.60**
AC 230	3-position	120	Yes (18 s)	N4566	BPZ:SKC32.61	**SKC32.61**
AC 24	DC 0...10 V 4...20 mA 0...1000 Ohm	Open:120 Close:20	No	N4566	BPZ:SKC60	**SKC60**
AC 24	DC 0...10 V 4...20 mA 0...1000 Ohm	Open:120 Close:20	Yes (20 s)	N4566	BPZ:SKC62	**SKC62**

Combinable actuator for VXF42..

Operating voltage [V]	Positioning signal	Positioning time [s]	Spring return function	Data sheet	Stock no.	Product no.
AC 24	Modbus RTU	Open 120 Close 20	Yes	N4566	S55195-A128	**SKC62/MO**
AC 24 24	DC 0...10 V 4...20 mA 0...1000 Ohm	Open:120 Close:20	Yes (20 s)	N4566	BPZ:SKC62UA	**SKC62UA**
AC 24	3-position	120	No	N4566	BPZ:SKC82.60	**SKC82.60**
AC 24	3-position	120	Yes (18 s)	N4566	BPZ:SKC82.61	**SKC82.61**

3-port valves with flanged connections, PN 16

VXF42..C

- With flanged connections to ISO 7005
- For chilled, low and high temperature water and brine in closed circuits

Data sheet	A6V10794157
Stroke	to DN 80: 20 mm from DN 100: 40 mm
Leakage rate	0...0.02% of the kvs value
Leakage rate bypass	0.5...2 % of the k_{vs}-value
Medium temperature	-10...150 °C
Valve characteristic	Through-port: equal percentage Through-port: k_{vs} 250/400 linear Bypass: linear
Rangeability	to DN 40: >50 from DN 50: >100
Permissible operating pressure	1600 kPa
Material, valve body	Cast iron EN-GJL-250
Material, inside set	≤ DN 25: CrNi steel / brass ≥ DN 32: CrNi steel / CrNi steel
PN class	PN 16
Warranty	60 Months

Range overview VXF42..C

For customers in Asia / Australia

SAX.. Δp_{max} [kPa]	SAV.. Δp_{max} [kPa]	SKD.. Δp_{max} [kPa]	SKB.. Δp_{max} [kPa]	SKC.. Δp_{max} [kPa]	DN	k_{vs} [m³/h]	Stock no.	Product no.
400		400	400		25	6.3	S55204-V165	**VXF42.25-6.3C**
400		400	400		25	10	S55204-V166	**VXF42.25-10C**
400		400	400		32	16	S55204-V167	**VXF42.32-16C**
400	400	400	400		40	16	S55204-V168	**VXF42.40-16C**
400	400	400	400		40	25	S55204-V169	**VXF42.40-25C**
300	400	400	400		50	31.5	S55204-V170	**VXF42.50-31.5C**
300	400	400	400		50	40	S55204-V171	**VXF42.50-40C**
150	400	200	400		65	50	S55204-V172	**VXF42.65-50C**
150	400	200	400		65	63	S55204-V173	**VXF42.65-63C**
75	225	125	400		80	80	S55204-V174	**VXF42.80-80C**
75	225	125	400		80	100	S55204-V175	**VXF42.80-100C**
	125			250	100	125	S55204-V176	**VXF42.100-125C**
	125			250	100	160	S55204-V177	**VXF42.100-160C**
	90			160	125	200	S55204-V178	**VXF42.125-200C**
	90			160	125	250	S55204-V179	**VXF42.125-250C**
	60			100	150	315	S55204-V180	**VXF42.150-315C**
	60			100	150	400	S55204-V181	**VXF42.150-400C**

Replacement sealing glands for VXF42..C

Product Title	Data sheet	Stock no.	Product no.
Sealing gland complete, stem diameter 10 mm, sealing material EPDM		BPZ:428488060	**428488060**
Sealing gland complete, stem diameter 14 mm, sealing material EPDM, up to 150 °C		BPZ:467956290	**467956290**

Combinable actuator for VXF42..C

Operating voltage [V]	Positioning signal	Positioning time [s]	Spring return function	Data sheet	Stock no.	Product no.
AC 230	3-position	120	no	N4501	S55150-A105	**SAX31.00**
AC 230	3-position	30	no	N4501	S55150-A106	**SAX31.03**
AC/DC 24	DC 0...10 V DC 4...20 mA 0...1000 Ohm	30	no	N4501	S55150-A100	**SAX61.03**
AC/DC 24	Modbus RTU	30	No	N4501	S55150-A140	**SAX61.03/MO**
AC/DC 24	3-position	120	no	N4501	S55150-A102	**SAX81.00**
AC/DC 24	3-position	30	no	N4501	S55150-A103	**SAX81.03**
AC 230	3-position	120	No	N4503	S55150-A112	**SAV31.00**
AC/DC 24	DC 0...10 V DC 4...20 mA 0...1000 Ohm	120	No	N4503	S55150-A110	**SAV61.00**
AC/DC 24	Modbus RTU	120	No	N4503	S55150-A141	**SAV61.00/MO**
AC/DC 24	3-position	120	No	N4503	S55150-A111	**SAV81.00**
AC 230	3-position	Open:30 Close:10	Yes (8 s)	N4561	BPZ:SKD32.21	**SKD32.21**
AC 230	3-position	120	No	N4561	BPZ:SKD32.50	**SKD32.50**
AC 230	3-position	120	Yes (8 s)	N4561	BPZ:SKD32.51	**SKD32.51**
AC 24	DC 0...10 V DC 4...20 mA 0...1000 Ohm	Open:30 Close:15	No	N4561	BPZ:SKD60	**SKD60**
AC 24	DC 0...10 V DC 4...20 mA 0...1000 Ohm	Open:30 Close:15	Yes (15 s)	N4561	BPZ:SKD62	**SKD62**
AC 24	Modbus RTU	Open 30 Close 15	Yes	N4561	S55195-A129	**SKD62/MO**
AC 24 24	DC 0...10 V DC 4...20 mA 0...1000 Ohm	Open:30 Close:15	Yes (15 s)	N4561	BPZ:SKD62UA	**SKD62UA**
AC 24	3-position	120	No	N4561	BPZ:SKD82.50	**SKD82.50**
AC 24	3-position	120	Yes (8 s)	N4561	BPZ:SKD82.51	**SKD82.51**
AC 230	3-position	120	No	N4564	BPZ:SKB32.50	**SKB32.50**
AC 230	3-position	120	Yes (10 s)	N4564	BPZ:SKB32.51	**SKB32.51**
AC 24	DC 0...10 V 4...20 mA 0...1000 Ohm	Open:120 Close:10	No	N4564	BPZ:SKB60	**SKB60**
AC 24	DC 0...10 V 4...20 mA 0...1000 Ohm	Open:120 Close:10	Yes (10 s)	N4564	BPZ:SKB62	**SKB62**
AC 24	Modbus RTU	Open 120 Close 10	Yes	N4564	S55195-A127	**SKB62/MO**
AC 24 24	DC 0...10 V 4...20 mA 0...1000 Ohm	Open:120 Close:10	Yes (10 s)	N4564	BPZ:SKB62UA	**SKB62UA**
AC 24	3-position	120	No	N4564	BPZ:SKB82.50	**SKB82.50**
AC 24	3-position	120	Yes (10 s)	N4564	BPZ:SKB82.51	**SKB82.51**
AC 230	3-position	120	No	N4566	BPZ:SKC32.60	**SKC32.60**
AC 230	3-position	120	Yes (18 s)	N4566	BPZ:SKC32.61	**SKC32.61**
AC 24	DC 0...10 V 4...20 mA 0...1000 Ohm	Open:120 Close:20	No	N4566	BPZ:SKC60	**SKC60**
AC 24	DC 0...10 V 4...20 mA 0...1000 Ohm	Open:120 Close:20	Yes (20 s)	N4566	BPZ:SKC62	**SKC62**

Combinable actuator for VXF42..C

Operating voltage [V]	Positioning signal	Positioning time [s]	Spring return function	Data sheet	Stock no.	Product no.
AC 24	Modbus RTU	Open 120 Close 20	Yes	N4566	S55195-A128	**SKC62/MO**
AC 24 24	DC 0...10 V 4...20 mA 0...1000 Ohm	Open:120 Close:20	Yes (20 s)	N4566	BPZ:SKC62UA	**SKC62UA**
AC 24	3-position	120	No	N4566	BPZ:SKC82.60	**SKC82.60**
AC 24	3-position	120	Yes (18 s)	N4566	BPZ:SKC82.61	**SKC82.61**

Globe and pressure independent control valve (PICV)
3-port flanged valves

VXF43..

3-port seat valves PN16 with flanged connections

- With flanged connections to ISO 7005
- For cooling, chilled, low and high temperature water, brine, heat transfer oils in open and closed circuits

When using valves of the V..F43.., V..F53.. lines with a stem heating element and a medium temperature of below -5 °C, the stem sealing gland must be replaced.

Data sheet	N4404
Stroke	40 mm
Leakage rate	0...0.01 % of k_{vs} value
Leakage rate bypass	0.5...2 % of k_{vs} value
Medium temperature	-20...220 °C
Valve characteristic	Through-port: equal percentage Through-port: k_{vs} 250/400 linear Bypass: linear
Rangeability	>100
Permissible operating pressure	1600 kPa
Material, valve body	Cast iron EN-GJS-400-18-LT
Material, inside set	Stainless steel
PN class	PN 16
Warranty	60 Months

Range overview VXF43..

SAV.. Δp_{max} [kPa]	SKC.. Δp_{max} [kPa]	DN	k_{vs} [m³/h]	Stock no.	Product no.
400	650	65	50	S55206-V125	**VXF43.65-50**
400	650	65	63	S55206-V115	**VXF43.65-63**
225	400	80	80	S55206-V126	**VXF43.80-80**
225	400	80	100	S55206-V116	**VXF43.80-100**
125	250	100	125	S55206-V127	**VXF43.100-125**
125	250	100	160	S55206-V117	**VXF43.100-160**
90	160	125	200	S55206-V128	**VXF43.125-200**
90	160	125	250	S55206-V118	**VXF43.125-250**
60	100	150	315	S55206-V129	**VXF43.150-315**
60	100	150	400	S55206-V119	**VXF43.150-400**

8

Replacement sealing glands for VXF43..

Product Title	Data sheet	Stock no.	Product no.
Sealing gland complete, stem diameter 10 mm, sealing material EPDM		BPZ:428488060	**428488060**
Stem connection washer for SKB/SKC actuators, stem diameter 10 mm, set of 5		BPZ:7424200000	**7424200000**
Replacement sealing gland, stem diameter 10 mm, sealing material FEPM		S55845-Z150	**7428400610**

Combinable actuator for VXF43..

Operating voltage [V]	Positioning signal	Positioning time [s]	Spring return function	Data sheet	Stock no.	Product no.
AC 230	3-position	120	No	N4503	S55150-A112	**SAV31.00**
AC/DC 24	DC 0...10 V DC 4...20 mA 0...1000 Ohm	120	No	N4503	S55150-A110	**SAV61.00**
AC/DC 24	Modbus RTU	120	No	N4503	S55150-A141	**SAV61.00/MO**
AC/DC 24	3-position	120	No	N4503	S55150-A111	**SAV81.00**
AC 230	3-position	120	No	N4566	BPZ:SKC32.60	**SKC32.60**
AC 230	3-position	120	Yes (18 s)	N4566	BPZ:SKC32.61	**SKC32.61**

Combinable actuator for VXF43..

Operating voltage [V]	Positioning signal	Positioning time [s]	Spring return function	Data sheet	Stock no.	Product no.
AC 24	DC 0...10 V 4...20 mA 0...1000 Ohm	Open:120 Close:20	No	N4566	BPZ:SKC60	**SKC60**
AC 24	DC 0...10 V 4...20 mA 0...1000 Ohm	Open:120 Close:20	Yes (20 s)	N4566	BPZ:SKC62	**SKC62**
AC 24	Modbus RTU	Open 120 Close 20	Yes	N4566	S55195-A128	**SKC62/MO**
AC 24 24	DC 0...10 V 4...20 mA 0...1000 Ohm	Open:120 Close:20	Yes (20 s)	N4566	BPZ:SKC62UA	**SKC62UA**
AC 24	3-position	120	No	N4566	BPZ:SKC82.60	**SKC82.60**
AC 24	3-position	120	Yes (18 s)	N4566	BPZ:SKC82.61	**SKC82.61**

Bypass extension for VXF43..

Product Title	Data sheet	Stock no.	Product no.
Bypass extension, flanged connections, DN65	N4404	S55845-Z114	**ALF41B65**
Bypass extension, flanged connections, DN80	N4404	S55845-Z115	**ALF41B80**
Bypass extension, flanged connections, DN100	N4404	S55845-Z116	**ALF41B100**
Bypass extension, flanged connections, DN125	N4404	S55845-Z117	**ALF41B125**
Bypass extension, flanged connections, DN150	N4404	S55845-Z118	**ALF41B150**

Globe and pressure independent control valve (PICV)
3-port flanged valves

VXF47..

3-port seat valves PN16, flanged connections VXF47..

For use in heating, ventilating and air conditioning systems as a control valve for closed circuits

Data sheet	N4419
Leakage rate	0...0.1% of Kvs value
Leakage rate bypass	0.5...2% of Kvs value
Medium temperature	1...95 °C
Valve characteristic	Throughport: equal percentage, Kvs 250/315 Linear Bypass: linear
Rangeability	DN 50...150: > 50
Material, valve body	Cast iron EN-GJL-250
Material, inside set	CrNi Steel/Bronze
PN class	PN 16
Warranty	60 Months

Range overview VXF47..

For customers in Asia / Australia

SBX.. Δp_{max} [kPa]	SBV.. Δp_{max} [kPa]	DN	k_{vs} [m³/h]	Stock no.	Product no.
300		50	40	S55220-V100	**VXF47.50**
175	300	65	63	S55220-V101	**VXF47.65**
100	250	80	100	S55220-V102	**VXF47.80**
	200	100	160	S55220-V103	**VXF47.100**
	100	125	250	S55220-V104	**VXF47.125**
	75	150	315	S55220-V105	**VXF47.150**

Combinable actuator for VXF47..

Operating voltage [V]	Positioning signal	Positioning time [s]	Data sheet	Stock no.	Product no.
AC 230	3-position	180	N4519	S55160-A105	**SBV31**
AC 230	3-position	120	N4519	S55160-A102	**SBX31**
AC 24	DC 0...10 V	180	N4519	S55160-A103	**SBV61**
AC 24	DC 0...10 V	120	N4519	S55160-A100	**SBX61**
AC 24	3-position	180	N4519	S55160-A104	**SBV81**
AC 24	3-position	120	N4519	S55160-A101	**SBX81**

3-port seat valves PN25 with flanged connections

VXF53..

- With flanged connections to ISO 7005
- For cooling, chilled, low and high temperature water, brine, heat transfer oils in open and closed circuits

When using valves of the V..F43.., V..F53.. lines with a stem heating element and a medium temperature of below -5 °C, the stem sealing gland must be replaced.

Data sheet	N4405
Stroke	To DN 50: 20 mm From DN 65: 40 mm
Leakage rate	0...0.01 % of k_{vs} value
Leakage rate bypass	0.5...2 % of k_{vs} value;SAX...: 0.05 % of k_{vs} value
Medium temperature	-20...220 °C
Valve characteristic	Through-port: equal percentage Through-port: k_{vs} 250/400 linear Bypass: linear
Rangeability	>100
Permissible operating pressure	2500 kPa
Material, valve body	Cast iron EN-GJS-400-18-LT
Material, inside set	Stainless steel
PN class	PN 16 / PN 25
Warranty	60 Months

Range overview VXF53..

SAX.. Δp_{max} [kPa]	SAV.. Δp_{max} [kPa]	SKD.. Δp_{max} [kPa]	SKB.. Δp_{max} [kPa]	SKC.. Δp_{max} [kPa]	DN	k_{vs} [m³/h]	Stock no.	Product no.
1200		1200	1200		15	1.6	S55208-V140	**VXF53.15-1.6**
1200		1200	1200		15	2.5	S55208-V141	**VXF53.15-2.5**
1200		1200	1200		15	4	S55208-V142	**VXF53.15-4**
1200		1200	1200		20	6.3	S55208-V144	**VXF53.20-6.3**
1200		1200	1200		25	6.3	S55208-V145	**VXF53.25-6.3**
1200		1200	1200		25	10	S55208-V146	**VXF53.25-10**
750		1100	1200		32	16	S55208-V148	**VXF53.32-16**
500	1150	650	1200		40	16	S55208-V149	**VXF53.40-16**
500	1150	650	1200		40	25	S55208-V150	**VXF53.40-25**
300	700	400	1150		50	40	S55208-V152	**VXF53.50-40**
	400			650	65	63	S55208-V153	**VXF53.65-63**
	225			400	80	100	S55208-V154	**VXF53.80-100**
	125			250	100	160	S55208-V155	**VXF53.100-160**
	90			160	125	250	S55208-V156	**VXF53.125-250**
	60			100	150	400	S55208-V157	**VXF53.150-400**

Accessories for VXF53..

Product Title	Data sheet	Stock no.	Product no.
Sealing gland complete, stem diameter 10 mm, sealing material EPDM		BPZ:428488060	**428488060**
Stem connection washer for SKB/SKC actuators, stem diameter 10 mm, set of 5		BPZ:7424200000	**7424200000**
Replacement sealing gland, stem diameter 10 mm, sealing material FEPM		S55845-Z150	**7428400610**

Combinable actuator for VXF53..

Operating voltage [V]	Positioning signal	Positioning time [s]	Spring return function	Data sheet	Stock no.	Product no.
AC 230	3-position	120	no	N4501	S55150-A105	**SAX31.00**
AC 230	3-position	30	no	N4501	S55150-A106	**SAX31.03**
AC/DC 24	DC 0...10 V DC 4...20 mA 0...1000 Ohm	30	no	N4501	S55150-A100	**SAX61.03**
AC/DC 24	Modbus RTU	30	No	N4501	S55150-A140	**SAX61.03/MO**
AC/DC 24	3-position	120	no	N4501	S55150-A102	**SAX81.00**
AC/DC 24	3-position	30	no	N4501	S55150-A103	**SAX81.03**
AC 230	3-position	120	No	N4503	S55150-A112	**SAV31.00**
AC/DC 24	DC 0...10 V DC 4...20 mA 0...1000 Ohm	120	No	N4503	S55150-A110	**SAV61.00**
AC/DC 24	Modbus RTU	120	No	N4503	S55150-A141	**SAV61.00/MO**
AC/DC 24	3-position	120	No	N4503	S55150-A111	**SAV81.00**
AC 230	3-position	Open:30 Close:10	Yes (8 s)	N4561	BPZ:SKD32.21	**SKD32.21**
AC 230	3-position	120	No	N4561	BPZ:SKD32.50	**SKD32.50**
AC 230	3-position	120	Yes (8 s)	N4561	BPZ:SKD32.51	**SKD32.51**
AC 24	DC 0...10 V DC 4...20 mA 0...1000 Ohm	Open:30 Close:15	No	N4561	BPZ:SKD60	**SKD60**
AC 24	DC 0...10 V DC 4...20 mA 0...1000 Ohm	Open:30 Close:15	Yes (15 s)	N4561	BPZ:SKD62	**SKD62**
AC 24	Modbus RTU	Open 30 Close 15	Yes	N4561	S55195-A129	**SKD62/MO**
AC 24 24	DC 0...10 V DC 4...20 mA 0...1000 Ohm	Open:30 Close:15	Yes (15 s)	N4561	BPZ:SKD62UA	**SKD62UA**
AC 24	3-position	120	No	N4561	BPZ:SKD82.50	**SKD82.50**
AC 24	3-position	120	Yes (8 s)	N4561	BPZ:SKD82.51	**SKD82.51**
AC 230	3-position	120	No	N4564	BPZ:SKB32.50	**SKB32.50**
AC 230	3-position	120	Yes (10 s)	N4564	BPZ:SKB32.51	**SKB32.51**
AC 24	DC 0...10 V 4...20 mA 0...1000 Ohm	Open:120 Close:10	No	N4564	BPZ:SKB60	**SKB60**
AC 24	DC 0...10 V 4...20 mA 0...1000 Ohm	Open:120 Close:10	Yes (10 s)	N4564	BPZ:SKB62	**SKB62**
AC 24	Modbus RTU	Open 120 Close 10	Yes	N4564	S55195-A127	**SKB62/MO**
AC 24 24	DC 0...10 V 4...20 mA 0...1000 Ohm	Open:120 Close:10	Yes (10 s)	N4564	BPZ:SKB62UA	**SKB62UA**
AC 24	3-position	120	No	N4564	BPZ:SKB82.50	**SKB82.50**
AC 24	3-position	120	Yes (10 s)	N4564	BPZ:SKB82.51	**SKB82.51**
AC 230	3-position	120	No	N4566	BPZ:SKC32.60	**SKC32.60**
AC 230	3-position	120	Yes (18 s)	N4566	BPZ:SKC32.61	**SKC32.61**
AC 24	DC 0...10 V 4...20 mA 0...1000 Ohm	Open:120 Close:20	No	N4566	BPZ:SKC60	**SKC60**
AC 24	DC 0...10 V 4...20 mA 0...1000 Ohm	Open:120 Close:20	Yes (20 s)	N4566	BPZ:SKC62	**SKC62**

Combinable actuator for VXF53..

Operating voltage [V]	Positioning signal	Positioning time [s]	Spring return function	Data sheet	Stock no.	Product no.
AC 24	Modbus RTU	Open 120 Close 20	Yes	N4566	S55195-A128	**SKC62/MO**
AC 24 24	DC 0...10 V 4...20 mA 0...1000 Ohm	Open:120 Close:20	Yes (20 s)	N4566	BPZ:SKC62UA	**SKC62UA**
AC 24	3-position	120	No	N4566	BPZ:SKC82.60	**SKC82.60**
AC 24	3-position	120	Yes (18 s)	N4566	BPZ:SKC82.61	**SKC82.61**

Bypass extension for VXF53..

Product Title	Data sheet	Stock no.	Product no.
Bypass extension, flanged connections, DN15	N4404	S55845-Z110	**ALF41B15**
Bypass extension, flanged connections, DN25	N4404	S55845-Z111	**ALF41B25**
Bypass extension, flanged connections, DN40	N4404	S55845-Z112	**ALF41B40**
Bypass extension, flanged connections, DN50	N4404	S55845-Z113	**ALF41B50**

Globe and pressure independent control valve (PICV)
3-port flanged valves

VXF63..

3-port valves, PN40, with flanged connections

- With flanged connections to ISO 7005
- For cooling, chilled, low and high temperature water, brine, heat transfer oils in open and closed circuits

Data sheet	A6V11459527
Stroke	To DN 50: 20 mm From DN 65: 40 mm
Leakage rate	0...0.01 % of k_{vs} value
Leakage rate bypass	0.5...2 % of kvs value with SKD.., SKB.., SKC..
Medium temperature	-25...220 °C
Valve characteristic	Through-port: equal percentage Bypass: linear
Rangeability	>100
Permissible operating pressure	4000 kPa
Material, valve body	Cast iron ASTM A216WCB (GP240GH)
Material, inside set	Stainless steel
PN class	PN 40
Warranty	60 Months

Range overview VXF63..

SKD.. Δp_{max} [kPa]	SKB.. Δp_{max} [kPa]	SKC.. Δp_{max} [kPa]	DN	k_{vs} [m³/h]	Stock no.	Product no.
2000	2000		15	1.6	S55210-V131	**VXF63.15-1.6**
2000	2000		15	2.5	S55210-V132	**VXF63.15-2.5**
2000	2000		15	4	S55210-V133	**VXF63.15-4**
2000	2000		20	6.3	S55210-V134	**VXF63.20-6.3**
2000	2000		25	10	S55210-V136	**VXF63.25-10**
2000	2000		25	6.3	S55210-V135	**VXF63.25-6.3**
1100	2000		32	16	S55210-V137	**VXF63.32-16**
650	2000		40	16	S55210-V138	**VXF63.40-16**
650	2000		40	25	S55210-V139	**VXF63.40-25**
400	1150		50	31.5	S55210-V140	**VXF63.50-31.5**
		650	65	50	S55210-V141	**VXF63.65-50**
		400	80	80	S55210-V142	**VXF63.80-80**
		250	100	125	S55210-V143	**VXF63.100-125**
		160	125	200	S55210-V144	**VXF63.125-200**
		100	150	315	S55210-V145	**VXF63.150-315**

8

Accessories for VXF63..

Product Title	Data sheet	Stock no.	Product no.
Sealing gland complete, stem diameter 10 mm, sealing material EPDM		BPZ:428488060	**428488060**
Sealing gland complete, stem diameter 14 mm, sealing material EPDM, up to 150 °C		BPZ:467956290	**467956290**
Stem heating element for media < 0 °C	N4501	S55845-Z108	**ASZ6.6**

Replacement sealing glands for VXF63..

Product Title	Data sheet	Stock no.	Product no.
Sealing gland complete, stem diameter 10 mm, sealing material EPDM		BPZ:428488060	**428488060**
Replacement sealing gland, stem diameter 10 mm, sealing material FEPM		S55845-Z150	**7428400610**
Replacement sealing gland, stem diameter 14 mm, sealing material FEPM		S55846-Z114	**ALV14F32S**
Sealing gland complete, stem diameter 14 mm, sealing material EPDM, up to 150 °C		BPZ:467956290	**467956290**

Combinable actuator for VXF63..

Operating voltage [V]	Positioning signal	Positioning time [s]	Spring return function	Data sheet	Stock no.	Product no.
AC 230	3-position	Open:30 Close:10	Yes (8 s)	N4561	BPZ:SKD32.21	**SKD32.21**
AC 230	3-position	120	No	N4561	BPZ:SKD32.50	**SKD32.50**
AC 230	3-position	120	Yes (8 s)	N4561	BPZ:SKD32.51	**SKD32.51**
AC 24	DC 0...10 V DC 4...20 mA 0...1000 Ohm	Open:30 Close:15	No	N4561	BPZ:SKD60	**SKD60**
AC 24	DC 0...10 V DC 4...20 mA 0...1000 Ohm	Open:30 Close:15	Yes (15 s)	N4561	BPZ:SKD62	**SKD62**
AC 24	Modbus RTU	Open 30 Close 15	Yes	N4561	S55195-A129	**SKD62/MO**
AC 19.2...31.2 24	DC 0...10 V DC 4...20 mA 0...1000 Ohm	Open:30 Close:15	Yes (15 s)	N4561	BPZ:SKD62U	**SKD62U**
AC 24 24	DC 0...10 V DC 4...20 mA 0...1000 Ohm	Open:30 Close:15	Yes (15 s)	N4561	BPZ:SKD62UA	**SKD62UA**
AC 24	3-position	120	No	N4561	BPZ:SKD82.50	**SKD82.50**
AC 24	3-position	120	No	N4561	BPZ:SKD82.50U	**SKD82.50U**
AC 24	3-position	120	Yes (8 s)	N4561	BPZ:SKD82.51	**SKD82.51**
AC 24	3-position	120	Yes (8 s)	N4561	BPZ:SKD82.51U	**SKD82.51U**
AC 230	3-position	120	No	N4564	BPZ:SKB32.50	**SKB32.50**
AC 230	3-position	120	Yes (10 s)	N4564	BPZ:SKB32.51	**SKB32.51**
AC 24	DC 0...10 V 4...20 mA 0...1000 Ohm	Open:120 Close:10	No	N4564	BPZ:SKB60	**SKB60**
AC 24	DC 0...10 V 4...20 mA 0...1000 Ohm	Open:120 Close:10	Yes (10 s)	N4564	BPZ:SKB62	**SKB62**
AC 24	Modbus RTU	Open 120 Close 10	Yes	N4564	S55195-A127	**SKB62/MO**
AC 24 24	DC 0...10 V 4...20 mA 0...1000 Ohm	Open:120 Close:10	Yes (10 s)	N4564	BPZ:SKB62U	**SKB62U**
AC 24 24	DC 0...10 V 4...20 mA 0...1000 Ohm	Open:120 Close:10	Yes (10 s)	N4564	BPZ:SKB62UA	**SKB62UA**
AC 24	3-position	120	No	N4564	BPZ:SKB82.50	**SKB82.50**
AC 24	3-position	120	Yes (10 s)	N4564	BPZ:SKB82.51	**SKB82.51**
AC 24 24	3-position	120	No	N4564	BPZ:SKB82.50U	**SKB82.50U**
AC 230	3-position	120	No	N4566	BPZ:SKC32.60	**SKC32.60**
AC 19.2...28.2 24	3-position	120	Yes (10 s)	N4564	BPZ:SKB82.51U	**SKB82.51U**
AC 230	3-position	120	Yes (18 s)	N4566	BPZ:SKC32.61	**SKC32.61**
AC 24	DC 0...10 V 4...20 mA 0...1000 Ohm	Open:120 Close:20	No	N4566	BPZ:SKC60	**SKC60**
AC 24	DC 0...10 V 4...20 mA 0...1000 Ohm	Open:120 Close:20	Yes (20 s)	N4566	BPZ:SKC62	**SKC62**
AC 24	Modbus RTU	Open 120 Close 20	Yes	N4566	S55195-A128	**SKC62/MO**

Combinable actuator for VXF63..

Operating voltage [V]	Positioning signal	Positioning time [s]	Spring return function	Data sheet	Stock no.	Product no.
AC 24 24	DC 0...10 V 4...20 mA 0...1000 Ohm	Open:120 Close:20	Yes (20 s)	N4566	BPZ:SKC62U	**SKC62U**
AC 24 24	DC 0...10 V 4...20 mA 0...1000 Ohm	Open:120 Close:20	Yes (20 s)	N4566	BPZ:SKC62UA	**SKC62UA**
AC 24	3-position	120	No	N4566	BPZ:SKC82.60	**SKC82.60**
AC 24	3-position	120	Yes (18 s)	N4566	BPZ:SKC82.61	**SKC82.61**
AC 24 24	3-position	120	No	N4566	BPZ:SKC82.60U	**SKC82.60U**
AC 24 24	3-position	120	Yes (18 s)	N4566	BPZ:SKC82.61U	**SKC82.61U**

Modulating control valves with magnetic actuator, PN16, flanged

MXF461..

Mixing and 2-port valves PN 16 with magnetic actuator for modulating control of chilled or low-temperature hot water systems in closed circuits. With positioning control, position feedback signal, spring return function and manual control.

When used as a 2 port valve, inlet B (2) must be closed off with the Z155/.. blanking flange.
MXF461..P valves for media containing mineral oils (data sheet N4455)
MXF461.. valves are UL listed

CAUTION!
Use valve only as a mixing or 2-port valve, not as a diverting valve.

Data sheet	N4455
PN class	PN 16
Operating voltage	AC / DC 24 V
Positioning signal	DC 0...10 V DC 2...10 V DC 4...20 mA
Positioning time	<2 s
Spring return function	A->AB closed
Position feedback	DC 0...10 V
Degree of protection	IP54
Ambient temperature, operation	-5...45 °C
Mounting position	Upright to horizontal
Permissible operating pressure	1000 kPa
Leakage rate	< 0.02 % of k_{vs} value
Leakage rate bypass	< 0.2 % of k_{vs} value
Medium temperature	1...130 °C
Valve characteristic	Equal-percentage Linear
Stroke resolution $\Delta H/H_{100}$	1:1000
Material, valve body	Cast iron EN-GJL-250
Material, inside set	CrNi steel/brass
Warranty	60 Months

Range overview MXF461..

Scope of delivery: 1 blanking flange, 1 seal, screws, spring washers and nuts.

DN	k_{vs} [m³/h]	Δp_{max} [kPa]	Δp_s [kPa]	Stock no.	Product no.
15	0.6	300	300	BPZ:MXF461.15-0.6	**MXF461.15-0.6**
15	1.5	300	300	BPZ:MXF461.15-1.5	**MXF461.15-1.5**
15	3	300	300	BPZ:MXF461.15-3.0	**MXF461.15-3.0**
20	5	300	300	BPZ:MXF461.20-5.0	**MXF461.20-5.0**
25	8	300	300	BPZ:MXF461.25-8.0	**MXF461.25-8.0**
32	12	300	300	BPZ:MXF461.32-12	**MXF461.32-12**
40	20	300	300	BPZ:MXF461.40-20	**MXF461.40-20**
50	30	300	300	BPZ:MXF461.50-30	**MXF461.50-30**
65	50	300	300	BPZ:MXF461.65-50	**MXF461.65-50**

Δp_s for use as 2-port valve.

Accessories for MXF461..

Product Title	Data sheet	Stock no.	Product no.
Replacement electronic for MXG461.., MXF461.. and MXG461S.., DN15...32	N4455	BPZ:ASE1	**ASE1**
Replacement electronic for MXG461.., MXF461.., DN40...65	N4455	BPZ:ASE2	**ASE2**
Signal converter DC 0...20 V Phs to DC 0...10 V	N5143	BPZ:SEZ91.6	**SEZ91.6**

Blanking flanges for MXF461..

Product Title	Stock no.	Product no.
Blanking flange, DN15	BPZ:Z155/15F	**Z155/15F**
Blanking flange, DN20	BPZ:Z155/20F	**Z155/20F**
Blanking flange, DN25	BPZ:Z155/25F	**Z155/25F**
Blanking flange, DN32	BPZ:Z155/32F	**Z155/32F**
Blanking flange, DN40	BPZ:Z155/40	**Z155/40**
Blanking flange, DN50	BPZ:Z155/50	**Z155/50**
Blanking flange, DN65	BPZ:Z155/65	**Z155/65**

Modulating control valves with magnetic actuator, PN16, flanged

M3P..FY..

Mixing and 2-port valves with magnetic actuator for modulating control of chilled or low-pressure hot water systems with closed circuits. Flanged connections, with positioning control, position feedback signal, spring return function, manual control.

When used as a 2 port valve, inlet B (2) must be closed off with the Z155/.. blanking flange.
M3P..FYP for media containing mineral oils (data sheet N4454)

CAUTION!
Valve may only be used as a mixing or 2-port valve, not as a diverting valve.

Data sheet	N4454
PN class	PN 16
Operating voltage	AC 24 V
Positioning signal	DC 0...10 V DC 4...20 mA
Positioning time	Close: <2 s
Spring return function	1->3 closed
Position feedback	DC 0...10 V
Degree of protection	IP31
Ambient temperature, operation	2...50 °C
Mounting position	Upright to horizontal
Leakage rate	< 0.05 % of k_{vs} value
Leakage rate bypass	ca. 2 % of k_{vs} value
Medium temperature	1...120 °C
Valve characteristic	Linear
Stroke resolution $\Delta H/H_{100}$	1:1000
Material, valve body	Cast iron EN-GJL-HB215
Material, inside set	CrNi steel/brass
Warranty	60 Months

Range overview M3P..FY

Scope of delivery: 1 blanking flange, 1 seal, screws, spring washers and nuts.

DN	k_{vs} [m³/h]	Δp_{max} [kPa]	Δp_s [kPa]	Stock no.	Product no.
80	80	300	300	BPZ:M3P80FY	**M3P80FY**
100	130	200	200	BPZ:M3P100FY	**M3P100FY**

Δp_s for use as 2-port valve.

Accessories for M3P..FY..

Product Title	Data sheet	Stock no.	Product no.
Replacement electronic for M3P..GY, M3P..FY, M2H..FY.., M3B..GY.., M2S..FY and M2FE..	N4348	BPZ:ZM150	**ZM150**
Replacement electronic for M3P..FY..	N4454	BPZ:ZM250	**ZM250**
Signal converter DC 0...20 V Phs to DC 0...10 V	N5143	BPZ:SEZ91.6	**SEZ91.6**

Blanking flanges for M3P..FY..

Product Title	Stock no.	Product no.
Blanking flange, DN100	BPZ:Z155/100	**Z155/100**
Blanking flange, DN80	BPZ:Z155/80	**Z155/80**

VXP45..

3-port seat valves, PN16

3-port valves with threaded connections for the control of terminal units, chilled ceilings or heating zones.
Suitable media: Water (to VDI 2035), water with anti-freeze.

V..P45.. valves are only used as mixing or 2-port valves, not as diverting valves.

Data sheet	N4845
Stroke	5.5 mm
Leakage rate	0...0.02 % of k_{vs} value
Leakage rate bypass	0...0.02 % of k_{vs} value
Medium temperature	1...110 °C
Valve characteristic	Throughport up to k_{vs} 6.3: equal-percentage Throughport from [kvs/] 10: linear Bypass: linear
Rangeability	From k_{vs}>6,3: >100 To k_{vs}=6,3: >50
Permissible operating pressure	1600 kPa
Material, valve body	Red brass CC499K (Rg5)
Material, inside set	CrNi steel / Rg5 / brass
PN class	PN 16
Warranty	60 Months

Range overview VXP45..

Con-nect. thread	SSB.. Δp_{max} [kPa]	SSC.. Δp_{max} [kPa]	DN	k_{vs} [m³/h]	Stock no.	Product no.
G ½" B	400		10	0.25	BPZ:VXP45.10-0.25	**VXP45.10-0.25**
G ½" B	400		10	0.4	BPZ:VXP45.10-0.4	**VXP45.10-0.4**
G ½" B	400		10	0.63	BPZ:VXP45.10-0.63	**VXP45.10-0.63**
G ½" B	400		10	1	BPZ:VXP45.10-1	**VXP45.10-1**
G ½" B	400		10	1.6	BPZ:VXP45.10-1.6	**VXP45.10-1.6**
G ¾" B	350		15	2.5	BPZ:VXP45.15-2.5	**VXP45.15-2.5**
G 1" B	350		20	4	BPZ:VXP45.20-4	**VXP45.20-4**
G 1¼" B	300		25	6.3	BPZ:VXP45.25-6.3	**VXP45.25-6.3**
G 1½" B		300	25	10	BPZ:VXP45.25-10	**VXP45.25-10**
G 2" B		175	32	16	BPZ:VXP45.32-16	**VXP45.32-16**
G 2¼" B		75	40	25	BPZ:VXP45.40-25	**VXP45.40-25**

70 % k_{vs} in bypass for all types.

8

Combinable actuator for VXP45..

Operating voltage [V]	Positioning signal	Positioning time	Spring return function	Data sheet	Stock no.	Product no.
AC 24 DC 24	DC 0...10 V	12.5 s for 2.5 mm stroke		A6V12681511	S55180-A134	**SSB161.05HF**
AC 24 DC 24	DC 0...10 V	12.5 s for 2.5 mm stroke		A6V12681511	S55180-A146	**SSB161.05HF/00**
AC 24 DC 24		12.5 s for 2.5 mm stroke		A6V13359034	S55180-A148	**SSB161.05UT**
AC 230	3-position	150 s	No	N4891	BPZ:SSB31	**SSB31**
AC 24 DC 24	DC 0...10 V	12.5 s for 2.5 mm stroke		A6V12681511	S55155-A101	**SSC161.05HF**
AC 24 DC 24	DC 0...10 V	12.5 s for 2.5 mm stroke		A6V12681511	S55180-A147	**SSC161.05HF/00**
AC 24 DC 24		12.5 s for 2.5 mm stroke		A6V13359035	S55180-A149	**SSC161.05UT**
AC/DC 24	DC 0...10 V	75 s	No	N4891	BPZ:SSB61	**SSB61**

Combinable actuator for VXP45..

Operating voltage [V]	Positioning signal	Positioning time	Spring return function	Data sheet	Stock no.	Product no.
AC 24	3-position	150 s	No	N4891	BPZ:SSB81	**SSB81**
AC 230	3-position	150 s	No	N4895	BPZ:SSC31	**SSC31**
AC/DC 24	DC 0...10 V	30 s	No	N4895	BPZ:SSC61	**SSC61**
AC/DC 24	DC 0...10 V	30 s	Yes (15 s)	N4895	BPZ:SSC61.5	**SSC61.5**
AC 24	3-position	150 s	No	N4895	BPZ:SSC81	**SSC81**

VMP45..

3-port seat valves with bypass, PN16

3-port seat valves with bypass, with threaded connections for the control of terminal units, chilled ceilings or heating zones.
Suitable media: Water (to VDI 2035), water with anti-freeze.

V..P45.. valves are only used as mixing valves, not as diverting valves.

Data sheet	N4845
Stroke	5.5 mm
Leakage rate	0...0.02 % of k_{vs} value
Leakage rate bypass	0...0.02 % of k_{vs} value
Medium	Water with anti-freeze
Medium temperature	1...110 °C
Valve characteristic	Equal-percentage: Bypass: linear
Permissible operating pressure	1600 kPa
Material, valve body	Red brass CC499K (Rg5)
Material, inside set	CrNi steel, brass
PN class	PN 16
Warranty	60 Months

Range overview VMP45..

Con- nect. thread	SSB.. Δp_{max} [kPa]	DN	k_{vs} [m³/h]	Stock no.	Product no.
G ½" B	400	10	0.25	BPZ:VMP45.10-0.25	**VMP45.10-0.25**
G ½" B	400	10	0.4	BPZ:VMP45.10-0.4	**VMP45.10-0.4**
G ½" B	400	10	0.63	BPZ:VMP45.10-0.63	**VMP45.10-0.63**
G ½" B	400	10	1	BPZ:VMP45.10-1	**VMP45.10-1**
G ½" B	400	10	1.6	BPZ:VMP45.10-1.6	**VMP45.10-1.6**
G ¾" B	350	15	2.5	BPZ:VMP45.15-2.5	**VMP45.15-2.5**
G 1" B	350	20	4	BPZ:VMP45.20-4	**VMP45.20-4**

70 % k_{vs} in bypass for all types.

Combinable actuator for VMP45..

Operating voltage [V]	Positioning signal	Positioning time	Data sheet	Stock no.	Product no.
AC 24 DC 24	DC 0...10 V	12.5 s for 2.5 mm stroke	A6V12681511	S55180-A134	**SSB161.05HF**
AC 24 DC 24	DC 0...10 V	12.5 s for 2.5 mm stroke	A6V12681511	S55180-A146	**SSB161.05HF/00**
AC 230	3-position	150 s	N4891	BPZ:SSB31	**SSB31**
AC/DC 24	DC 0...10 V	75 s	N4891	BPZ:SSB61	**SSB61**
AC 24	3-position	150 s	N4891	BPZ:SSB81	**SSB81**

3-port valves, PN16

VXP47..

3-port valves with threaded connections for the control of terminal units, chilled ceilings or heating zones.
Suitable media: Water (to VDI 2035), water with anti-freeze.

VXP47.. and VMP47.. 3-port valves are only used as mixing valves.
They are also suitable for SERTO® compression fittings.

Data sheet	N4847
Stroke	2.5 mm
Leakage rate	0...0.05 % of k_{vs} value
Leakage rate bypass	0...0.05 % of k_{vs} value
Medium	Water with anti-freeze
Medium temperature	1...110 °C
Valve characteristic	Throughport: linear Bypass: linear
Permissible operating pressure	1600 kPa
Material, valve body	Red brass CC491K (Rg5)
PN class	PN 16
Characteristic	linear
Material, inside set	CrNi steel, brass
Warranty	60 Months

Range overview VXP47..

Con-nect. thread	SFP../SSP.. Δp_{max} [kPa]	STP.. Δp_{max} [kPa]	DN	k_{vs} [m³/h]	Stock no.	Product no.
G ½" B	400	400	10	0.25	BPZ:VXP47.10-0.25	**VXP47.10-0.25**
G ½" B	400	250	10	0.4	BPZ:VXP47.10-0.4	**VXP47.10-0.4**
G ½" B	400	250	10	0.63	BPZ:VXP47.10-0.63	**VXP47.10-0.63**
G ½" B	400	250	10	1	BPZ:VXP47.10-1	**VXP47.10-1**
G ½" B	300	150	10	1.6	BPZ:VXP47.10-1.6	**VXP47.10-1.6**
G ¾" B	300	150	15	2.5	BPZ:VXP47.15-2.5	**VXP47.15-2.5**
G 1" B	175	100	20	4	BPZ:VXP47.20-4	**VXP47.20-4**

70 % k_{vs} in bypass for all types.

Combinable actuator for VXP47..

Operating voltage [V]	Positioning signal	Positioning time	Data sheet	Stock no.	Product no.
AC 24 DC 24	2-position PDM	270 s	N4884	S55174-A102	**STP73**
AC 230	2-position	10 s	N4865	BPZ:SFP21/18	**SFP21/18**
AC 24	2-position	10 s	N4865	BPZ:SFP71/18	**SFP71/18**
AC 24 DC 24	DC 0...10 V	12.5 s for 2.5 mm stroke	A6V12681511	S55180-A131	**SSF161.05HF**
AC 24 DC 24	DC 0...10 V	12.5 s for 2.5 mm stroke	A6V12681511	S55180-A145	**SSF161.05HF/00**
AC 230	3-position	150 s	N4864	BPZ:SSP31	**SSP31**
AC/DC 24	DC 0...10 V	34 s	N4864	BPZ:SSP61	**SSP61**
AC 24	3-position	150 s	N4864	BPZ:SSP81	**SSP81**

VMP47..

3-port seat valves with bypass, PN16

3-port valves with bypass and threaded connections for the control of terminal units, chilled ceilings or heating zones.
Suitable media: Water (to VDI 2035), water with anti-freeze.

VXP47.. and VMP47.. 3-port valves are only used as mixing valves.
They are also suitable for SERTO® compression fittings.

Data sheet	N4847
Stroke	2.5 mm
Leakage rate	0...0.05 % of k_{vs} value
Leakage rate bypass	0...0.05 % of k_{vs} value
Medium	Water with anti-freeze
Medium temperature	1...110 °C
Valve characteristic	Throughport: linear Bypass: linear
Permissible operating pressure	1600 kPa
Material, valve body	Red brass CC491K (Rg5)
PN class	PN 16
Characteristic	linear
Material, inside set	CrNi steel, brass
Warranty	60 Months

Range overview VMP47..

Con-nect. thread	SFP../SSP.. Δp_{max} [kPa]	STP.. Δp_{max} [kPa]	DN	k_{vs} [m³/h]	Stock no.	Product no.
G ½" B	400	400	10	0.25	BPZ:VMP47.10-0.25	**VMP47.10-0.25**
G ½" B	400	400	10	0.4	BPZ:VMP47.10-0.4	**VMP47.10-0.4**
G ½" B	400	250	10	0.63	BPZ:VMP47.10-0.63	**VMP47.10-0.63**
G ½" B	400	250	10	0.63	BPZ:VMP47.10-0.63S	**VMP47.10-0.63S**
G ½" B	400	250	10	1	BPZ:VMP47.10-1	**VMP47.10-1**
G ½" B	300	150	10	1.6	BPZ:VMP47.10-1.6	**VMP47.10-1.6**
G ¾" B	300	150	15	2.5	BPZ:VMP47.15-2.5	**VMP47.15-2.5**
W 1⅛-14"	300	150	15	2.5	BPZ:VMP47.15-2.5S	**VMP47.15-2.5S**

70 % k_{vs} in bypass for all types.

Combinable actuator for VMP47..

Operating voltage [V]	Positioning signal	Positioning time	Data sheet	Stock no.	Product no.
AC 24 DC 24	2-position PDM	270 s	N4884	S55174-A102	**STP73**
AC 230	2-position	10 s	N4865	BPZ:SFP21/18	**SFP21/18**
AC 24	2-position	10 s	N4865	BPZ:SFP71/18	**SFP71/18**
AC 24 DC 24	DC 0...10 V	12.5 s for 2.5 mm stroke	A6V12681511	S55180-A131	**SSF161.05HF**
AC 24 DC 24	DC 0...10 V	12.5 s for 2.5 mm stroke	A6V12681511	S55180-A145	**SSF161.05HF/00**
AC 230	3-position	150 s	N4864	BPZ:SSP31	**SSP31**
AC/DC 24	DC 0...10 V	34 s	N4864	BPZ:SSP61	**SSP61**
AC 24	3-position	150 s	N4864	BPZ:SSP81	**SSP81**

3-port zone valves, PN16 with on/off characteristic

VXI46../2

3-port valves, internally threaded connections, for the control of zones or terminal units. Suitable media: water (to VDI 2035), water with anti-freeze.

Stroke	2.5 mm
Leakage rate	0...0.05% of k_{vs} value
Leakage rate bypass	2...5% of k_{vs} value
Medium	Water Water with anti-freeze
Medium temperature	1...110 °C
Valve characteristic	Non-linear (on/off)
Permissible operating pressure	1600 kPa
Material, valve body	Hot-pressed brass
Material, inside set	Stainless steel, brass
PN class	PN 16
Warranty	60 Months

Range overview VXI46..

Con-nect. thread	SFA.. Δp_{max} [kPa]	STA.. Δp_{max} [kPa]	DN	k_{vs} [m³/h]	Stock no.	Product no.
Rp 1"	200	140	25	5.5	S55249-V112	**VXI46.25T/2**
Rp ½"	300	200	15	2.15	S55249-V109	**VXI46.15/2**
Rp ¾"	300	200	20	3.5	S55249-V110	**VXI46.20/2**
Rp 1"	250	150	25	5	S55249-V111	**VXI46.25/2**

To ensure noiseless operation, Δp_{max} should not exceed 100 kPa.

Combinable actuator for VXI46..

Operating voltage [V]	Positioning signal	Positioning time [s]	Data sheet	Stock no.	Product no.
AC 230	2-position	210	N4884	S55174-A101	**STA23**
AC 24 DC 24	2-position PDM	270	N4884	S55174-A100	**STA73**
AC 24 DC 24	2-position PDM	270	N4884	S55174-A109	**STA73/00**
AC 230	2-position	10	N4863	BPZ:SFA21/18	**SFA21/18**
AC 24	2-position	10	N4863	BPZ:SFA71/18	**SFA71/18**
AC 230	2-position (SPST)	50 Hz:10 60 Hz:8.3	A6V10446174	S55176-A104	**SUA21/3**

Globe and pressure independent control valve (PICV)
3-port threaded valves

C/VXI41..

3-port seat valves PN16 with internally threaded connections

- With internally threaded connections Rp.. to ISO 7-1
- For chilled water, low pressure hot water in open and closed circuits

Data sheet	N4362
Stroke	20 mm
Leakage rate	0...0.02 % of k_{vs} value
Leakage rate bypass	0.5...2 % of k_{vs} value
Medium temperature	-25...150 °C
Valve characteristic	Throughport: equal-percentage Bypass: linear
Rangeability	DN 15: >50 DN 20...50: >100
Permissible operating pressure	1600 kPa
Material, valve body	Bronze CC491K (Rg5)
Material, inside set	CrNi Steel/ Rg 5 brass
PN class	PN 16
Warranty	60 Months

Range overview C/VXI41..

For customers in Asia / Australia

Con-nect. thread	SAX.. Δp_{max} [kPa]	SKD.. Δp_{max} [kPa]	DN	k_{vs} [m³/h]	Stock no.	Product no.
Rp ½"	400	400	15	2.5	BPZ:C/VXI41.15-2.5	**C/VXI41.15-2.5**
Rp ½"	400	400	15	4	BPZ:C/VXI41.15-4	**C/VXI41.15-4**
Rp ¾"	400	400	20	6.3	BPZ:C/VXI41.20-6.3	**C/VXI41.20-6.3**
Rp 1"	400	400	25	10	BPZ:C/VXI41.25-10	**C/VXI41.25-10**
Rp 1¼"	400	400	32	16	BPZ:C/VXI41.32-16	**C/VXI41.32-16**
Rp 1½"	400	400	40	25	BPZ:C/VXI41.40-25	**C/VXI41.40-25**
Rp 2"	300	400	50	40	BPZ:C/VXI41.50-40	**C/VXI41.50-40**

Δp_{max}-ratings in kPa are valid for mixing applications.

Replacement sealing glands for C/VXI41..

Product Title	Data sheet	Stock no.	Product no.
Sealing gland complete, stem diameter 10 mm, sealing material EPDM, up to 150 °C		BPZ:428488740	**428488740**

Combinable actuator for C/VXI41..

Operating voltage [V]	Positioning signal	Positioning time [s]	Spring return function	Data sheet	Stock no.	Product no.
AC 230	3-position	120	no	N4501	S55150-A105	**SAX31.00**
AC 230	3-position	30	no	N4501	S55150-A106	**SAX31.03**
AC/DC 24	DC 0...10 V DC 4...20 mA 0...1000 Ohm	30	no	N4501	S55150-A100	**SAX61.03**
AC/DC 24	Modbus RTU	30	No	N4501	S55150-A140	**SAX61.03/MO**
AC/DC 24	3-position	120	no	N4501	S55150-A102	**SAX81.00**
AC/DC 24	3-position	30	no	N4501	S55150-A103	**SAX81.03**
AC 230	3-position	Open:30 Close:10	Yes (8 s)	N4561	BPZ:SKD32.21	**SKD32.21**
AC 230	3-position	120	No	N4561	BPZ:SKD32.50	**SKD32.50**
AC 230	3-position	120	Yes (8 s)	N4561	BPZ:SKD32.51	**SKD32.51**
AC 24	DC 0...10 V DC 4...20 mA 0...1000 Ohm	Open:30 Close:15	No	N4561	BPZ:SKD60	**SKD60**

Combinable actuator for C/VXI41..

Operating voltage [V]	Positioning signal	Positioning time [s]	Spring return function	Data sheet	Stock no.	Product no.
AC 24	DC 0...10 V DC 4...20 mA 0...1000 Ohm	Open:30 Close:15	Yes (15 s)	N4561	BPZ:SKD62	**SKD62**
AC 24	Modbus RTU	Open 30 Close 15	Yes	N4561	S55195-A129	**SKD62/MO**
AC 24 24	DC 0...10 V DC 4...20 mA 0...1000 Ohm	Open:30 Close:15	Yes (15 s)	N4561	BPZ:SKD62UA	**SKD62UA**
AC 24	3-position	120	No	N4561	BPZ:SKD82.50	**SKD82.50**
AC 24	3-position	120	Yes (8 s)	N4561	BPZ:SKD82.51	**SKD82.51**

Globe and pressure independent control valve (PICV)
3-port threaded valves

VXG41..

3-port seat valves PN16 with externally threaded connections

- With threaded connections to ISO 228-1
- For drinking, cooling and chilled water, low and high temperature hot water and brine in open and closed circuits

VXG41..01 are DVGW approved

Data sheet	N4463
Stroke	20 mm
Leakage rate	0...0.02 % of k_{vs} value
Leakage rate bypass	Standard version: 0.5...2 % of k_{vs} value Special version: 0...0.02 % of k_{vs} value (VXG41..01)
Valve characteristic	Throughport: equal-percentage Bypass: linear
Rangeability	DN 15: > 50 DN 20...50: > 100
Permissible operating pressure	1600 kPa
Material, valve body	Bronze CC499K (CuSn5Zn5Pb2)
Material, inside set	CrNi steel
PN class	PN 16
Warranty	60 Months

Range overview VXG41..

Con-nect. thread	SAX.. Δp_{max} [kPa]	SKD.. Δp_{max} [kPa]	SKB.. Δp_{max} [kPa]	DN	k_{vs} [m³/h]	Stock no.	Product no.
G 1" B	800	800	800	15	1.6	BPZ:VXG41.1301	**VXG41.1301**
G 1" B	800	800	800	15	2.5	BPZ:VXG41.1401	**VXG41.1401**
G 1" B	800	800	800	15	4	BPZ:VXG41.15	**VXG41.15**
G 1" B	800	800	800	15	4	BPZ:VXG41.1501	**VXG41.1501**
G 1¼" B	800	800	800	20	6.3	BPZ:VXG41.20	**VXG41.20**
G 1¼" B	800	800	800	20	6.3	BPZ:VXG41.2001	**VXG41.2001**
G 1½" B	800	800	800	25	10	BPZ:VXG41.25	**VXG41.25**
G 1½" B	800	800	800	25	10	BPZ:VXG41.2501	**VXG41.2501**
G 2" B	800	800	800	32	16	BPZ:VXG41.32	**VXG41.32**
G 2" B	800	800	800	32	16	BPZ:VXG41.3201	**VXG41.3201**
G 2¼" B	525	775	800	40	25	BPZ:VXG41.40	**VXG41.40**
G 2¼" B	525	775	800	40	25	BPZ:VXG41.4001	**VXG41.4001**
G 2¾" B	300	450	800	50	40	BPZ:VXG41.50	**VXG41.50**
G 2¾" B	300	450	800	50	40	BPZ:VXG41.5001	**VXG41.5001**

VXG41..01 are DVGW (drinking water) approved.
VXG41..01 are supplied with tight bypass
Δp_{max}-ratings are valid for mixing applications.
ALG..3 fittings must be ordered as individual items and will be delivered separately.

Replacement sealing glands for VXG41..

Product Title	Data sheet	Stock no.	Product no.
Sealing gland complete, stem diameter 10 mm, sealing material EPDM, up to 150 °C		BPZ:428488740	**428488740**

Accessories for VXG41..

Product Title	Data sheet	Stock no.	Product no.
Malleable cast iron fitting G 1" / Rp ½", set of 3	N4463	BPZ:ALG153	**ALG153**
Brass fitting G 1" / Rp ½", 100 °C, set of 3	N4463	S55846-Z101	**ALG153B**
Malleable cast iron fitting G 1¼" / Rp ¾", set of 3	N4463	BPZ:ALG203	**ALG203**
Brass fitting G 1¼" / Rp ¾", 100 °C, set of 3	N4463	S55846-Z103	**ALG203B**
Malleable cast iron fitting G 1½" / Rp 1", set of 3	N4463	BPZ:ALG253	**ALG253**
Brass fitting G 1½" / Rp 1", 100 °C, set of 3	N4463	S55846-Z105	**ALG253B**

Accessories for VXG41..

Product Title	Data sheet	Stock no.	Product no.
Malleable cast iron fitting G 2" / Rp 1¼", set of 3	N4463	BPZ:ALG323	**ALG323**
Brass fitting G 2" / Rp 1¼", 100 °C, set of 3	N4463	S55846-Z107	**ALG323B**
Malleable cast iron fitting G 2¼" / Rp 1½", set of 3	N4463	BPZ:ALG403	**ALG403**
Brass fitting G 2¼" / Rp 1½", 100 °C, set of 3	N4463	S55846-Z109	**ALG403B**
Malleable cast iron fitting G 2¾" / Rp 2", set of 3	N4463	BPZ:ALG503	**ALG503**
Brass fitting G 2 ¾" / Rp 2", 100 °C, set of 3	N4463	S55846-Z111	**ALG503B**

Combinable actuator for VXG41..

Operating voltage [V]	Positioning signal	Positioning time [s]	Spring return function	Data sheet	Stock no.	Product no.
AC 230	3-position	120	no	N4501	S55150-A105	**SAX31.00**
AC 230	3-position	30	no	N4501	S55150-A106	**SAX31.03**
AC/DC 24	DC 0...10 V DC 4...20 mA 0...1000 Ohm	30	no	N4501	S55150-A100	**SAX61.03**
AC/DC 24	Modbus RTU	30	No	N4501	S55150-A140	**SAX61.03/MO**
AC/DC 24	3-position	120	no	N4501	S55150-A102	**SAX81.00**
AC/DC 24	3-position	30	no	N4501	S55150-A103	**SAX81.03**
AC 230	3-position	Open:30 Close:10	Yes (8 s)	N4561	BPZ:SKD32.21	**SKD32.21**
AC 230	3-position	120	No	N4561	BPZ:SKD32.50	**SKD32.50**
AC 230	3-position	120	Yes (8 s)	N4561	BPZ:SKD32.51	**SKD32.51**
AC 24	DC 0...10 V DC 4...20 mA 0...1000 Ohm	Open:30 Close:15	No	N4561	BPZ:SKD60	**SKD60**
AC 24	DC 0...10 V DC 4...20 mA 0...1000 Ohm	Open:30 Close:15	Yes (15 s)	N4561	BPZ:SKD62	**SKD62**
AC 24	Modbus RTU	Open 30 Close 15	Yes	N4561	S55195-A129	**SKD62/MO**
AC 24 24	DC 0...10 V DC 4...20 mA 0...1000 Ohm	Open:30 Close:15	Yes (15 s)	N4561	BPZ:SKD62UA	**SKD62UA**
AC 24	3-position	120	No	N4561	BPZ:SKD82.50	**SKD82.50**
AC 24	3-position	120	Yes (8 s)	N4561	BPZ:SKD82.51	**SKD82.51**
AC 230	3-position	120	No	N4564	BPZ:SKB32.50	**SKB32.50**
AC 230	3-position	120	Yes (10 s)	N4564	BPZ:SKB32.51	**SKB32.51**
AC 24	DC 0...10 V 4...20 mA 0...1000 Ohm	Open:120 Close:10	No	N4564	BPZ:SKB60	**SKB60**
AC 24	DC 0...10 V 4...20 mA 0...1000 Ohm	Open:120 Close:10	Yes (10 s)	N4564	BPZ:SKB62	**SKB62**
AC 24	Modbus RTU	Open 120 Close 10	Yes	N4564	S55195-A127	**SKB62/MO**
AC 24 24	DC 0...10 V 4...20 mA 0...1000 Ohm	Open:120 Close:10	Yes (10 s)	N4564	BPZ:SKB62UA	**SKB62UA**
AC 24	3-position	120	No	N4564	BPZ:SKB82.50	**SKB82.50**
AC 24	3-position	120	Yes (10 s)	N4564	BPZ:SKB82.51	**SKB82.51**

Globe and pressure independent control valve (PICV)
3-port threaded valves

VXG44..

3-port seat valves PN16 with externally threaded connections

- With threaded connections to ISO 228/1
- For chilled water or low-temperature hot water in closed circuits

Data sheet	N4464
Stroke	5.5 mm
Leakage rate	0...0.02 % of k_{vs} value
Leakage rate bypass	0...0.02 % of k_{vs} value
Medium temperature	1...120 °C
Valve characteristic	Throughport: linear Bypass: linear
Rangeability	From DN 20: >100 DN 15: >50
Permissible operating pressure	1600 kPa
Material, valve body	Bronze CC491K (Rg5)
Material, inside set	CrNi steel/Rg5/brass
PN class	PN 16
Warranty	60 Months

Range overview VXG44..

Con- nect. thread	SAS.. Δp_{max} [kPa]	DN	k_{vs} [m³/h]	Stock no.	Product no.
G 1" B	400	15	0.25	BPZ:VXG44.15-0.25	**VXG44.15-0.25**
G 1" B	400	15	0.4	BPZ:VXG44.15-0.4	**VXG44.15-0.4**
G 1" B	400	15	0.63	BPZ:VXG44.15-0.63	**VXG44.15-0.63**
G 1" B	400	15	1	BPZ:VXG44.15-1	**VXG44.15-1**
G 1" B	400	15	1.6	BPZ:VXG44.15-1.6	**VXG44.15-1.6**
G 1" B	400	15	2.5	BPZ:VXG44.15-2.5	**VXG44.15-2.5**
G 1" B	400	15	4	BPZ:VXG44.15-4	**VXG44.15-4**
G 1¼" B	400	20	6.3	BPZ:VXG44.20-6.3	**VXG44.20-6.3**
G 1½" B	400	25	10	BPZ:VXG44.25-10	**VXG44.25-10**
G 2" B	250	32	16	BPZ:VXG44.32-16	**VXG44.32-16**
G 2¼" B	125	40	25	BPZ:VXG44.40-25	**VXG44.40-25**

Accessories for VXG44..

Product Title	Data sheet	Stock no.	Product no.
Malleable cast iron fitting G 1" / Rp ½", set of 3	N4463	BPZ:ALG153	**ALG153**
Brass fitting G 1" / Rp ½", 100 °C, set of 3	N4463	S55846-Z101	**ALG153B**
Malleable cast iron fitting G 1¼" / Rp ¾", set of 3	N4463	BPZ:ALG203	**ALG203**
Brass fitting G 1¼" / Rp ¾", 100 °C, set of 3	N4463	S55846-Z103	**ALG203B**
Malleable cast iron fitting G 1½" / Rp 1", set of 3	N4463	BPZ:ALG253	**ALG253**
Brass fitting G 1½" / Rp 1", 100 °C, set of 3	N4463	S55846-Z105	**ALG253B**
Malleable cast iron fitting G 2" / Rp 1¼", set of 3	N4463	BPZ:ALG323	**ALG323**
Brass fitting G 2" / Rp 1¼", 100 °C, set of 3	N4463	S55846-Z107	**ALG323B**
Malleable cast iron fitting G 2¼" / Rp 1½", set of 3	N4463	BPZ:ALG403	**ALG403**
Brass fitting G 2¼" / Rp 1½", 100 °C, set of 3	N4463	S55846-Z109	**ALG403B**

Combinable actuator for VXG44..

Operating voltage [V]	Positioning signal	Positioning time [s]	Data sheet	Stock no.	Product no.
AC 230	3-position	120	N4581	S55158-A106	**SAS31.00**
AC 230	3-position	30	N4581	S55158-A107	**SAS31.03**
AC 230	3-position	120	N4581	S55158-A108	**SAS31.50**
AC 230	3-position	30	N4581	S55158-A109	**SAS31.53**

Combinable actuator for VXG44..

Operating voltage [V]	Positioning signal	Positioning time [s]	Data sheet	Stock no.	Product no.
AC/DC 24	DC 0...10 V DC 4...20 mA 0...1000 Ohm	30	N4581	S55158-A100	**SAS61.03**
AC/DC 24	Modbus RTU	30	N4581	S55158-A121	**SAS61.03/MO**
AC/DC 24	DC 0...10 V DC 4...20 mA 0...1000 Ohm	30	N4581	S55158-A101	**SAS61.33**
AC/DC 24	Modbus RTU	30	N4581	S55158-A122	**SAS61.33/MO**
AC/DC 24	DC 0...10 V DC 4...20 mA 0...1000 Ohm	30	N4581	S55158-A102	**SAS61.53**
AC/DC 24	3-position	120	N4581	S55158-A103	**SAS81.00**
AC/DC 24	3-position	30	N4581	S55158-A104	**SAS81.03**
AC/DC 24	3-position	30	N4581	S55158-A105	**SAS81.33**

Globe and pressure independent control valve (PICV)
3-port threaded valves

MXG461..

Modulating control valves with magnetic actuator, PN16, external thread

Mixing and 2-port valves PN 16 with magnetic actuator for modulating control of chilled or low-temperature hot water systems in closed circuits. With positioning control, position feedback signal, spring return function and manual control.

When used as a 2-port valve, port B must be closed off with the accessories (nut, cover, gasket) provided with the valve.
MXG461..P valves for media containing mineral oils (data sheet N4455)
MXG461.. valves are UL listed

CAUTION!
Valve may only be used as a mixing or 2-port valve, not as a diverting valve.

Data sheet	N4455
PN class	PN 16
Operating voltage	AC / DC 24 V
Positioning signal	DC 0...10 V DC 2...10 V DC 4..20 mA
Positioning time	<2 s
Spring return function	A->AB closed
Position feedback	DC 0...10 V
Degree of protection	IP54
Ambient temperature, operation	-5...45 °C
Mounting position	Upright to horizontal
Permissible operating pressure	1000 kPa
Leakage rate	< 0.02 % of k_{vs} value
Leakage rate bypass	< 0.2 % of k_{vs} value
Medium temperature	1...130 °C
Valve characteristic	Equal-percentage Linear
Stroke resolution $\Delta H/H_{100}$	1:1000
Material, valve body	Cast iron EN-GJL-250
Material, inside set	CrNi steel/brass
Warranty	60 Months

Range overview MXG461..

DN	k_{vs} [m³/h]	Con-nect. thread	Δp_{max} [kPa]	Δp_s [kPa]	Stock no.	Product no.
15	0.6	G 1" B	300	300	BPZ:MXG461.15-0.6	**MXG461.15-0.6**
15	1.5	G 1" B	300	300	BPZ:MXG461.15-1.5	**MXG461.15-1.5**
15	3	G 1" B	300	300	BPZ:MXG461.15-3.0	**MXG461.15-3.0**
20	5	G 1¼" B	300	300	BPZ:MXG461.20-5.0	**MXG461.20-5.0**
25	8	G 1½" B	300	300	BPZ:MXG461.25-8.0	**MXG461.25-8.0**
32	12	G 2" B	300	300	BPZ:MXG461.32-12	**MXG461.32-12**
40	20	G 2¼" B	300	300	BPZ:MXG461.40-20	**MXG461.40-20**
50	30	G 2¾" B	300	300	BPZ:MXG461.50-30	**MXG461.50-30**

Fittings ALG..3 must be ordered as separate items and are also supplied as such.
Δp_s for use as 2-port valve

Accessories for MXG461..

Product Title	Data sheet	Stock no.	Product no.
Replacement electronic for MXG461.., MXF461.. and MXG461S.., DN15...32	N4455	BPZ:ASE1	**ASE1**
Replacement electronic for MXG461.., MXF461.., DN40...65	N4455	BPZ:ASE2	**ASE2**
Signal converter DC 0...20 V Phs to DC 0...10 V	N5143	BPZ:SEZ91.6	**SEZ91.6**

Fittings: Set of 3

Product Title	Data sheet	Stock no.	Product no.
Malleable cast iron fitting G 1" / Rp ½", set of 3	N4463	BPZ:ALG153	**ALG153**
Malleable cast iron fitting G 1¼" / Rp ¾", set of 3	N4463	BPZ:ALG203	**ALG203**
Malleable cast iron fitting G 1½" / Rp 1", set of 3	N4463	BPZ:ALG253	**ALG253**
Malleable cast iron fitting G 2" / Rp 1¼", set of 3	N4463	BPZ:ALG323	**ALG323**
Malleable cast iron fitting G 2¼" / Rp 1½", set of 3	N4463	BPZ:ALG403	**ALG403**
Malleable cast iron fitting G 2¾" / Rp 2", set of 3	N4463	BPZ:ALG503	**ALG503**

MXG461B..

Modulating control valves with magnetic actuator, PN16, external thread, DVGW

Mixing and 2-port valves PN 16 with magnetic actuator for modulating control of DHW (mains water, water in open circuits), chilled water or low-temperature hot water.
With positioning control, position feedback signal, spring return function and manual control.

MXG461B... valves are UL listed

CAUTION!
Valve may only be used as a mixing or 2-port valve, not as a diverting valve.

Data sheet	N4461
PN class	PN 16
Operating voltage	AC 24 V DC 20...30 V
Positioning signal	DC 0...10 V DC 2...10 V DC 0...20 mA DC 4...20 mA DC 0...20 V Phs
Positioning time	<2 s
Spring return function	A->AB closed
Position feedback	DC 0...10 V DC 2...10 V DC 0...20 mA DC 4...20 mA
Degree of protection	IP31
Ambient temperature, operation	-5...45 °C
Mounting position	Upright to horizontal
Permissible operating pressure	1600 kPa
Leakage rate	< 0.05 % of k_{vs} value
Leakage rate bypass	< 0.2 % of k_{vs} value
Medium temperature	-20...130 °C
Medium	Water
Valve characteristic	Equal-percentage Linear
Stroke resolution $\Delta H/H_{100}$	1:1000
Product conformity	DVGW approved
Material, valve body	Red brass CC499K (Rg5)
Material, inside set	CrNi steel
Warranty	60 Months

8

Range overview MXG461B..

DN	k_{vs} [m³/h]	Con-nect. thread	Δp_{max} [kPa]	Δp_s [kPa]	Stock no.	Product no.
15	0.6	G 1" B	1000	1000	BPZ:MXG461B15-0.6	**MXG461B15-0.6**
15	1.5	G 1" B	1000	1000	BPZ:MXG461B15-1.5	**MXG461B15-1.5**
15	3	G 1" B	1000	1000	BPZ:MXG461B15-3	**MXG461B15-3**
20	5	G 1¼" B	800	800	BPZ:MXG461B20-5	**MXG461B20-5**
25	8	G 1½" B	700	700	BPZ:MXG461B25-8	**MXG461B25-8**
32	12	G 2" B	600	600	BPZ:MXG461B32-12	**MXG461B32-12**
40	20	G 2¼" B	600	600	BPZ:MXG461B40-20	**MXG461B40-20**
50	30	G 2¾" B	600	600	BPZ:MXG461B50-30	**MXG461B50-30**

The fittings are made of bronze / brass and supplied with the valve.
Δp_s for use as 2-port valve.
MXG461B.. valves with magnetic actuators are UL-listed.

Accessories for MXG461B..

Product Title	Data sheet	Stock no.	Product no.
Stem heating element for media temperatures 0 °C, 10 W, AC/DC 24 V		BPZ:Z366	**Z366**
Replacement electronic for MXG461B.., MVF461H.. and MXG462S..		BPZ:ASE12	**ASE12**

MXG461S..

Modulating control valves with magnetic actuator, PN16, external thread, stainless steel

Mixing and 2-port valves with magnetic actuator for modulating control of general and industrial HVAC plants. For open and closed circuits. With positioning control, position feedback signal, spring return function and manual control.

MXG461S... valves are UL listed.

CAUTION!
Valve may only be used as a mixing or 2-port valve, not as a diverting valve. When used as a 2-port seat valve, port B must be closed off by means of the supplied cover and the cap nut for the fitting.

Data sheet	N4465
PN class	PN 16
Operating voltage	AC / DC 24 V
Positioning signal	DC 0...10 V DC 2...10 V DC 4...20 mA
Positioning time	< 2 s
Spring return function	A -> AB closed
Position feedback	DC 0...10 V
Degree of protection	IP54
Ambient temperature, operation	-5...45 °C
Mounting position	Upright to horizontal
Leakage rate	< 0.02 % of k_{vs} value
Leakage rate bypass	< 0.2 % of k_{vs} value
Medium temperature	1...130 °C
Valve characteristic	Equal-percentage Linear
Stroke resolution $\Delta H/H_{100}$	1:1000
Material, valve body	Steel / CrNi steel
Material, inside set	CrNi steel
Warranty	60 Months

Range overview MXG461S..

DN	k_{vs} [m³/h]	Con-nect. thread	Δp_{max} [kPa]	Δp_s [kPa]	Stock no.	Product no.
15	1.5	G 1" B	300	300	BPZ:MXG461S15-1.5	**MXG461S15-1.5**
20	5	G 1¼" B	300	300	BPZ:MXG461S20-5.0	**MXG461S20-5.0**
25	8	G 1½" B	300	300	BPZ:MXG461S25-8.0	**MXG461S25-8.0**
32	12	G 2" B	300	300	BPZ:MXG461S32-12	**MXG461S32-12**

Union fittings made of stainless steel must delivered by thirds.
Δp_s for use as 2-port valve.
MXG461S.. valves with magnetic actuators are UL-listed.

Accessories for MXG461S..

Product Title	Data sheet	Stock no.	Product no.
Replacement electronic for MXG461.., MXF461.. and MXG461S.., DN15...32	N4455	BPZ:ASE1	**ASE1**
Replacement electronic for MXG461.., MXF461.., DN40...65	N4455	BPZ:ASE2	**ASE2**
Signal converter DC 0...20 V Phs to DC 0...10 V	N5143	BPZ:SEZ91.6	**SEZ91.6**

Modulating control valves with magnetic actuator, PN16, external thread, stainless steel

MXG462S..

Mixing and 2-port valves with magnetic actuator for modulating control of general and industrial HVAC plants. For open and closed circuits. With positioning control, position feedback signal, spring return function and manual control.

MXG462S.. valves are UL listed

CAUTION!
Valve may only be used as a mixing or 2-port valve, not as a diverting valve. When used as a 2-port valve, port B must be closed off with the cover supplied with the valve and a cap nut of the fitting.

Data sheet	N4466
PN class	PN 16
Operating voltage	AC 24 V DC 20...30 V
Positioning signal	DC 0...10 V DC 2...10 V DC 0...20 mA DC 4...20 mA DC 0...20 V Phs
Positioning time	<2 s
Spring return function	A->AB closed
Position feedback	DC 0...10 V DC 2...10 V DC 0...20 mA DC 4...20 mA
Degree of protection	IP31
Ambient temperature, operation	-5...45 °C
Mounting position	Upright to horizontal
Permissible operating pressure	1600 kPa
Leakage rate	< 0.05 % of k_{vs} value
Leakage rate bypass	< 0.2 % of k_{vs} value
Medium temperature	-20...130 °C
Valve characteristic	Equal-percentage Linear
Stroke resolution $\Delta H/H_{100}$	1:1000
Material, valve body	Steel / CrNi steel
Material, inside set	CrNi steel
Warranty	60 Months

Range overview MXG462S..

DN	k_{vs} [m³/h]	Con-nect. thread	Δp_{max} [kPa]	Δp_s [kPa]	Stock no.	Product no.
40	20	G 2¼" B	600	600	S55306-M100	**MXG462S40-20**
50	30	G 2¾" B	600	600	BPZ:MXG462S50-30	**MXG462S50-30**

Union fittings made of stainless steel must be delivered by thirds.
Δp_s for use as 2-port valve.
MXG462S.. valves with magnetic actuators are UL-listed.

Accessories for MXG462S..

Product Title	Data sheet	Stock no.	Product no.
Stem heating element for media temperatures 0 °C, 10 W, AC/DC 24 V		BPZ:Z366	**Z366**

Globe and pressure independent control valve (PICV)
3-port threaded valves

ALG..3

Fittings, pipe-side with threaded connection

Cylindric thread to ISO 228-1 on the valve side. Tapered R-externally or cylindrical Rp-internally threaded to ISO 7-1 on the pipe side.
Each fitting set ALG..3 consists of 3 cap nuts, 3 insert nuts and 3 flat seals.

Warranty	24 Months

Range overview ALG..3

Connecting thread, valve side	Connecting thread, pipe side ["]	Material	Stock no.	Product no.
G ¾ "	Rp ⅜	Malleable cast iron, phosphated	BPZ:ALG123	**ALG123**
G ½ "	R ⅜	Brass	BPZ:ALG133	**ALG133**
G ¾ "	R ½	Brass	BPZ:ALG143	**ALG143**
G 1 "	Rp ½	Malleable cast iron, phosphated	BPZ:ALG153	**ALG153**
G 1 "	Rp ½	Brass	S55846-Z101	**ALG153B**
G 1¼ "	Rp ¾	Malleable cast iron, phosphated	BPZ:ALG203	**ALG203**
G 1¼ "	Rp ¾	Brass	S55846-Z103	**ALG203B**
G 1½ "	Rp 1	Malleable cast iron, phosphated	BPZ:ALG253	**ALG253**
G 1½ "	Rp 1	Brass	S55846-Z105	**ALG253B**
G 2 "	Rp 1¼	Malleable cast iron, phosphated	BPZ:ALG323	**ALG323**
G 2 "	Rp 1¼	Brass	S55846-Z107	**ALG323B**
G 2¼ "	Rp 1½	Malleable cast iron, phosphated	BPZ:ALG403	**ALG403**
G 2¼ "	Rp 1½	Brass	S55846-Z109	**ALG403B**
G 2¾ "	Rp 2	Malleable cast iron, phosphated	BPZ:ALG503	**ALG503**
G 2¾ "	Rp 2	Brass	S55846-Z111	**ALG503B**

ALS..

Fittings, pipeside with welding connection

Cylindric thread to ISO 228-1 on valve side. Welded connection on the pipe side.
Each ALS.. set consists of 2 cap nuts, 2 inserts and 2 flat seals.

Warranty	60 Months

Fittings with weldable connections: Set of 2

Pipe diameter [mm]	Connecting thread, valve side ["]	Stock no.	Product no.
21.3	G ¾	BPZ:ALS152	**ALS152**
26.8	G 1	BPZ:ALS202	**ALS202**
33.7	G 1¼	BPZ:ALS252	**ALS252**

Intelligent Valve as a sensor controlled pressure independent control valve PN16 with flanged connection including flow and capacity measurement.

EVF..

- RS485 for Modbus RTU integration e.g. into Climatix
- Ethernet Daisychain for BACnet IP integration into Desigo
- Cloud connectivity to extend functionality with various Software-as-a-Service (SaaS) packages such as Building Operator - a cloud-based application to manage fleet of sites
- Power supply AC/DC 24 V
- Control signal analog DC0/2..10V or 4..20mA
- With flanged connections to ISO 7005/1
- For use in heating, ventilating, air conditioning systems as a control valve and for dynamic hydraulic balancing
- For use with cooling, chilled, low and high temperature water in closed circuits
- Volumetric flow 10'000...120'000 l/h

Data sheet	A6V11444716
PN class	PN 16
Operating voltage	AC 24 V DC 24 V
Frequency	50 Hz
Communication	Ethernet - BACnet IP Ethernet - Cloud Modbus RTU
Universal inputs	2
Universal input, signal	Pt1000 LG-Ni1000 DC 0...10 V DC 2...10 V 4...20 mA
Analog output, signal	DC 2...10 V DC 0...10 V DC 4...20 mA
Analog inputs, number	2
Analog input, signal	Pt1000
Measurement accuracy	Volume flow: +/- 2% (25...100% V100) Temperature difference (at 20 °C): +/- 0.2 K
Control accuracy, volume flow	+/- 5 % (25...100 % V100)
Rangeability	1:100
Leakage rate	0.03 % of kvs-value
Valve characteristic	selectable
Medium	Low-temperature hot water High-temperature hot water Chilled water
Medium temperature	1...120 °C
Material, inside set	Stainless steel
Warranty	60 Months

Range overview EVF..

DN	Vol. flow V [m³/h]	Vol. flow Vmin [m³/h]	k_{vs} [m³/h]	SAV.. Δp_{max} [kPa]	SAV.. Δp_s [kPa]	SAX.. Δp_{max} [kPa]	SAX.. Δp_s [kPa]	Stock no.	Product no.
65	30	10	55			600	1600	S55300-M106	**EVF4U20E065**
80	48	16	80			600	1600	S55300-M107	**EVF4U20E080**
100	75	25	100	600	1600			S55300-M108	**EVF4U20E100**
125	120	40	142	600	1600			S55300-M109	**EVF4U20E125**

Accessories for EVF..

Product Title	Data sheet	Stock no.	Product no.
Control Valve Mounting Set PN16 for Intelligent Valve with flange connection	A6V11444716	BPZ:ALF4..	**ALF4..**
Pair of temperature sensors Pt1000, length 100 mm, ø 6 mm, type PL, cable length 2.5 m	A6V11444716	S55845-Z230	**EZU10-10025**
Pair of temperature sensors Pt1000, length 100 mm, ø 6 mm, type PL, cable length 6 m	A6V11444716	S55845-Z237	**EZU10-10060**
Wall mount socket for Intelligent Valve Controller Box ASE4U10E		S55845-Z234	**EZU-WA**
Spacer for mounting Intelligent Valve Controller Box ASE4U10E with a 25 mm distance on the flow sensor		S55845-Z236	**EZU-WB**
Ultrasonic Flow Sensor for Intelligent Valve, PN16, flanged connection	A6V11444716	BPZ:AVF4	**AVF4..**
Welding sleeve G ½", 45° to the pipe axis, with threaded hole G ½"		S55563-F122	**WZT-G12**

Accessories for EXF..

Product Title	Data sheet	Stock no.	Product no.
Control Valve Mounting Set PN16 for Intelligent Valve with flange connection	A6V11444716	BPZ:ALF4..	**ALF4..**
Pair of temperature sensors Pt1000, length 100 mm, ø 6 mm, type PL, cable length 2.5 m	A6V11444716	S55845-Z230	**EZU10-10025**
Pair of temperature sensors Pt1000, length 100 mm, ø 6 mm, type PL, cable length 6 m	A6V11444716	S55845-Z237	**EZU10-10060**
Wall mount socket for Intelligent Valve Controller Box ASE4U10E		S55845-Z234	**EZU-WA**
Spacer for mounting Intelligent Valve Controller Box ASE4U10E with a 25 mm distance on the flow sensor		S55845-Z236	**EZU-WB**
Ultrasonic Flow Sensor for Intelligent Valve, PN16, flanged connection	A6V11444716	BPZ:AVF4	**AVF4..**
Welding sleeve G ½", 45° to the pipe axis, with threaded hole G ½"		S55563-F122	**WZT-G12**

Intelligent Valve 3-Port configuration as a sensor controlled pressure independent control valve PN16 with flanged connection including flow and capacity measurement

EXF..

- RS485 for Modbus RTU integration e.g. into Climatix
- Ethernet Daisychain for BACnet IP integration into Desigo
- Cloud connectivity to extend functionality with various Software-as-a-Service (SaaS) packages such as Building Operator – a cloud-based application to manage fleet of sites
- Power supply AC/DC 24 V
- Control signal analog DC0/2..10V or 4..20mA
- With flanged connections to ISO 7005/1
- For use in heating, ventilating, air conditioning systems as a control valve and for dynamic hydraulic balancing
- For use with cooling, chilled, low and high temperature water in closed circuits
- Volume flow 6000...50'000 l/h.

Data sheet	A6V11444716
PN class	PN 16
Operating voltage	AC 24 V DC 24 V
Frequency	50 Hz
Communication	Ethernet - BACnet IP Ethernet - Cloud RS485 - Modbus RTU
Universal inputs	2
Universal input, signal	Pt1000 LG-Ni1000 DC 0...10 V DC 2...10 V 4...20 mA
Analog outputs, number	1
Analog outputs	1
Analog output, signal	DC 2...10 V DC 0...10 V DC 4...20 mA
Analog inputs, number	2
Analog input, signal	Pt1000
Measurement accuracy	Volume flow: +/- 2% (25...100% V100) Temperature difference (at 20 °C): +/- 0.2 K
Control accuracy, volume flow	+/- 5 % (25...100 % V100)
Rangeability	1:100
Leakage rate	0.03 % of kvs Bypass: 1...3 % of kvs
Valve characteristic	selectable
Medium	Low-temperature hot water High-temperature hot water Chilled water
Medium temperature	1...120 °C
Material, inside set	Stainless steel
Packaging unit	Unit
Warranty	60 Months

Range overview EXF..

DN	Vol. flow V [m³/h]	Vol. flow Vmin [m³/h]	k_{vs} [m³/h]	SAX.. Δp_{max} [kPa]	Stock no.	Product no.
65	20	6	54	150	S55300-M117	**EXF4U20E065**
80	32	9.6	79	75	S55300-M118	**EXF4U20E080**
100	50	15	116	125	S55300-M119	**EXF4U20E100**

Globe and pressure independent control valve (PICV)
Flanged pressure independent control valves

VPF43..

Pressure independent control valves (PICV) PN16 with flanged connections

For use in heating, ventilating, air conditioning systems and district heating as a control valve in closed circuits.

Leakage rate	Class IV (0...0.01% of volumetric flow)
PN class	PN 16
Medium	Water Water with anti-freeze
Valve characteristic	Linear
Rangeability	1:100
Permissible operating pressure	1600 kPa
Material, valve body	Cast iron
Material, inside set	Stainless steel, Brass (DZR)
Mounting position	Upright to 90° inclined
Warranty	60 Months

Range overview VPF43..

DN	Vol. flow Vmin [m³/h]	Vol. flow V [m³/h]	ΔP_{min} [kPa]	SAV..P Δp_{max} [kPa]	SAV..P Δp_s [kPa]	SQV..P Δp_{max} [kPa]	SQV..P Δp_s [kPa]	Stock no.	Product no.
125	18.5	110	35	600	600	600	600	S55266-V108	**VPF43.125F110**
125	23	135	53	600	600	600	600	S55266-V109	**VPF43.125F135**
150	25.6	148	35	600	600	600	600	S55266-V110	**VPF43.150F160**
150	32	195	65	600	600	600	600	S55266-V111	**VPF43.150F200**
200	95	210	32	600	600	600	600	S55266-V148	**VPF43.200F210**
200	130	280	78	600	600	600	600	S55266-V149	**VPF43.200F280**

Further information to the actuators please see "Actuators for combi valves".
Check the datasheet for detailed dPmin values per presetting

VPF43../1

Pressure independent control valves (PICV) PN16 with flanged connections

For use in heating, ventilating, air conditioning systems and district heating as a control valve in closed circuits.

Data sheet	A6V11213406
Leakage rate	Class IV (0...0.01% of volumetric flow)
PN class	PN 16
Medium	Water Water with anti-freeze
Medium temperature	1...120 °C
Valve characteristic	Linear
Rangeability	1:100
Permissible operating pressure	1600 kPa
Material, valve body	Cast iron
Material, inside set	Stainless steel, Brass (DZR)
Mounting position	Upright to 90° inclined
Warranty	60 Months

Range overview VPF43../1

For customer in Asia/Australia

DN	Vol. flow V [m³/h]	Vol. flow Vmin [m³/h]	SAV..P Δp_{max} [kPa]	SAV..P Δp_s [kPa]	SQV..P Δp_{max} [kPa]	SQV..P Δp_s [kPa]	Stock no.	Product no.
125	110	18.5	600	600	600	600	S55266-V128	**VPF43.125F110/1**
125	135	23	600	600	600	600	S55266-V134	**VPF43.125F135/1**
150	148	25.6	600	600	600	600	S55266-V129	**VPF43.150F160/1**
150	195	32	600	600	600	600	S55266-V135	**VPF43.150F200/1**

Accessories for VPF43..

Product Title	Data sheet	Stock no.	Product no.
Electronic manometer for Siemens combi valves	CE1N4853	BPZ:ALE10	**ALE10**
Measuring lines and tips for Siemens combi valves	CE1N4853	BPZ:ALE11	**ALE11**
Spare nipples for VPI45.., set of 2, for VPI45..	CE1N4853	BPZ:ALP45	**ALP45**
Blanking plug for P/T ports	CE1N4853	S55264-V115	**ALP46**
Drain ball valve inclusive O-ring	CE1N4853	S55264-V116	**ALP47**
Combined P/T port and drain ball valve with red ribbon	CE1N4853	S55264-V117	**ALP48**
Long P/T ports (set of 2 pieces)	CE1N4853	S55264-V118	**ALP49**

Combinable actuator for VPF43..

Operating voltage [V]	Positioning signal	Positioning time [s]	Data sheet	Stock no.	Product no.
AC 230	3-position	120	N4510	S55150-A121	**SAV31P00**
AC/DC 24	DC 0...10 V DC 4...20 mA 0...1000 Ohm	120	N4510	S55150-A119	**SAV61P00**
AC/DC 24	Modbus RTU	120	N4510	S55150-A144	**SAV61P00/MO**

Combinable actuator for VPF43..

Operating voltage [V]	Positioning signal	Positioning time [s]	Data sheet	Stock no.	Product no.
AC/DC 24	3-position	120	N4510	S55150-A120	**SAV81P00**
AC 24 DC 24	3-position DC 0...10 V DC 4...20 mA	20 mm: 40 40 mm: 80	N4833	S55150-A130	**SQV91P30**
AC 24 DC 24	3-position DC 0...10 V DC 4...20 mA	40	N4833	S55150-A131	**SQV91P40**

Pressure independent control valves (PICVs) PN16 with flanged connections

VPF44..

For use in heating, ventilation, air conditioning systems and district heating as a control valve in closed circuits.

Leakage rate	Class IV (0...0.01% of volumetric flow)
PN class	PN 16
Medium	Water Water with anti-freeze
Valve characteristic	Linear
Rangeability	1:100
Permissible operating pressure	1600 kPa
Material, valve body	Cast iron
Material, inside set	Stainless steel, Brass (DZR)
Mounting position	Upright to 90° inclined
Warranty	60 Months

Range overview VPF44..

DN	Vol. flow V [m³/h]	Vol. flow Vmin [m³/h]	ΔP_{min} [kPa]	SAX..P Δp_{max} [kPa]	SAX..P Δp_s [kPa]	SQV..P Δp_{max} [kPa]	SQV..P Δp_s [kPa]	Stock no.	Product no.
125	112	15	30			600	600	S55266-V144	**VPF44.125F110**
125	132	18	45			600	600	S55266-V145	**VPF44.125F135**
150	150	19	30			600	600	S55266-V146	**VPF44.150F150**
150	208	26.3	50			600	600	S55266-V147	**VPF44.150F200**
50	14.3	3.7	25	600	700	600	700	S55266-V174	**VPF44.50F15**
50	24.6	5.7	55	600	700	600	700	S55266-V175	**VPF44.50F25**
65	24.4	4.5	32	600	700	600	700	S55266-V176	**VPF44.65F25**
65	37.7	6.4	50	600	700	600	700	S55266-V177	**VPF44.65F35**
80	35.7	6.8	22	600	700	600	700	S55266-V178	**VPF44.80F35**
80	49.9	8.5	40	600	700	600	700	S55266-V179	**VPF44.80F45**
100	69.6	12.2	33			600	700	S55266-V142	**VPF44.100F70**
100	90.9	14.8	45			600	700	S55266-V143	**VPF44.100F90**

Accessories for VPF44..

Product Title	Data sheet	Stock no.	Product no.
Electronic manometer for Siemens combi valves	CE1N4853	BPZ:ALE10	**ALE10**
Measuring lines and tips for Siemens combi valves	CE1N4853	BPZ:ALE11	**ALE11**
Spare nipples for VPI45.., set of 2, for VPI45..	CE1N4853	BPZ:ALP45	**ALP45**
DPR replacement for VPF44.100F70/VPF54.100F70	A6V12273951	S55264-V161	**ALR100F70**
DPR replacement for VPF44.100F90/VPF54.100F90	A6V12273951	S55264-V162	**ALR100F90**
DPR replacement for VPF44.50F15/VPF54.50F15	A6V12273951	S55264-V155	**ALR50F15**
DPR replacement for VPF44.50F25/VPF54.50F25	A6V12273951	S55264-V156	**ALR50F25**
DPR replacement for VPF44.65F25	A6V12273951	S55264-V157	**ALR65F25-LP**
DPR replacement for VPF44.65F35	A6V12273951	S55264-V158	**ALR65F35-LP**
DPR replacement for VPF44.80F35/VPF54.80F35	A6V12273951	S55264-V159	**ALR80F35**
DPR replacement for VPF44.80F45/VPF54.80F45	A6V12273951	S55264-V160	**ALR80F45**
Blanking plug for P/T ports	CE1N4853	S55264-V115	**ALP46**
Drain ball valve inclusive O-ring	CE1N4853	S55264-V116	**ALP47**
Combined P/T port and drain ball valve with red ribbon	CE1N4853	S55264-V117	**ALP48**
Long P/T ports (set of 2 pieces)	CE1N4853	S55264-V118	**ALP49**

Combinable actuator for VPF44..

Operating voltage [V]	Positioning signal	Positioning time [s]	Data sheet	Stock no.	Product no.
AC 230	3-position	30	N4509	S55150-A118	**SAX31P03**
AC/DC 24	DC 0...10 V DC 4...20 mA 0...1000 Ohm	30	N4509	S55150-A114	**SAX61P03**
AC/DC 24	Modbus RTU	30	N4509	S55150-A143	**SAX61P03/MO**
AC/DC 24	3-position	30	N4509	S55150-A116	**SAX81P03**
AC 230	3-position	120	N4510	S55150-A121	**SAV31P00**
AC/DC 24	DC 0...10 V DC 4...20 mA 0...1000 Ohm	120	N4510	S55150-A119	**SAV61P00**
AC/DC 24	Modbus RTU	120	N4510	S55150-A144	**SAV61P00/MO**
AC/DC 24	3-position	120	N4510	S55150-A120	**SAV81P00**
AC 24 DC 24	3-position DC 0...10 V DC 4...20 mA	20 mm: 40 40 mm: 80	N4833	S55150-A130	**SQV91P30**
AC 24 DC 24	3-position DC 0...10 V DC 4...20 mA	40	N4833	S55150-A131	**SQV91P40**

Combi valves (PICV) PN25 with flanged connections

VPF53..

For use in heating, ventilating, air conditioning systems and district heating as a control valve in closed circuits

Leakage rate	Class IV (0...0.01% of volumetric flow)
PN class	PN 25
Medium	Water Water with anti-freeze
Valve characteristic	Linear
Rangeability	1:100
Permissible operating pressure	2500 kPa
Material, valve body	Cast iron EN-GJS-400-15
Material, inside set	Stainless steel, Brass (DZR)
Mounting position	Upright to 90° inclined
Warranty	60 Months

Range overview VPF53..

DN	Vol. flow Vmin [m³/h]	Vol. flow V [m³/h]	ΔP_{min} [kPa]	SAV..P Δp_{max} [kPa]	SAV..P Δp_s [kPa]	SQV..P Δp_{max} [kPa]	SQV..P Δp_s [kPa]	Stock no.	Product no.
125	18.5	110	35	600	600	600	600	S55266-V120	**VPF53.125F110**
125	23	135	53	600	600	600	600	S55266-V121	**VPF53.125F135**
150	25.6	148	35	600	600	600	600	S55266-V122	**VPF53.150F160**
150	32	195	65	600	600	600	600	S55266-V123	**VPF53.150F200**
200	95		32	600	600	600	600	S55266-V150	**VPF53.200F210**
200	130		78	600	600	600	600	S55266-V151	**VPF53.200F280**

Further information to the actuators please see "Actuators for combi valves".
Check the datasheet for detailed dPmin values per presetting

Accessories for VPF53..

Product Title	Data sheet	Stock no.	Product no.
Electronic manometer for Siemens combi valves	CE1N4853	BPZ:ALE10	**ALE10**
Measuring lines and tips for Siemens combi valves	CE1N4853	BPZ:ALE11	**ALE11**
Spare nipples for VPI45.., set of 2, for VPI45..	CE1N4853	BPZ:ALP45	**ALP45**
Blanking plug for P/T ports	CE1N4853	S55264-V115	**ALP46**
Drain ball valve inclusive O-ring	CE1N4853	S55264-V116	**ALP47**
Combined P/T port and drain ball valve with red ribbon	CE1N4853	S55264-V117	**ALP48**
Long P/T ports (set of 2 pieces)	CE1N4853	S55264-V118	**ALP49**

Combinable actuator for VPF53..

Operating voltage [V]	Positioning signal	Positioning time [s]	Data sheet	Stock no.	Product no.
AC 230	3-position	120	N4510	S55150-A121	**SAV31P00**
AC/DC 24	DC 0...10 V DC 4...20 mA 0...1000 Ohm	120	N4510	S55150-A119	**SAV61P00**
AC/DC 24	Modbus RTU	120	N4510	S55150-A144	**SAV61P00/MO**
AC/DC 24	3-position	120	N4510	S55150-A120	**SAV81P00**
AC 24 DC 24	3-position DC 0...10 V DC 4...20 mA	20 mm: 40 40 mm: 80	N4833	S55150-A130	**SQV91P30**
AC 24 DC 24	3-position DC 0...10 V DC 4...20 mA	40	N4833	S55150-A131	**SQV91P40**

Globe and pressure independent control valve (PICV)
Flanged pressure independent control valves

VPF54..

Pressure independent control valves (PICVs) PN25 with flanged connections

For use in heating, ventilating, air conditioning systems and district heating as a control valve in closed circuits

Data sheet	A6V12273951
Leakage rate	Class IV (0...0.01% of volumetric flow)
Medium	Water Water with anti-freeze
Medium temperature	1...120 °C
Valve characteristic	Linear
Rangeability	1:100
Permissible operating pressure	2500 kPa
Material, valve body	Cast iron EN-GJS-400-15
Material, inside set	Stainless steel, Brass (DZR)
Mounting position	Upright to 90° inclined
Warranty	60 Months

Range overview VPF54..

DN	Vol. flow V [m³/h]	Vol. flow Vmin [m³/h]	ΔP_{min} [kPa]	SAX..P Δp_{max} [kPa]	SAX..P Δp_s [kPa]	SAV..P Δp_{max} [kPa]	SAV..P Δp_s [kPa]	SQV..P Δp_{max} [kPa]	SQV..P Δp_s [kPa]	Stock no.	Product no.
125	112	15	30			600	600	600	600	S55266-V180	**VPF54.125F110**
125	132	18	45			600	600	600	600	S55266-V181	**VPF54.125F135**
150	150	19	30			600	600	600	600	S55266-V182	**VPF54.150F150**
150	208	26	50			600	600	600	600	S55266-V183	**VPF54.150F200**
50	14.3	3.7	25	600	700			600	700	S55266-V152	**VPF54.50F15**
50	24.6	5.7	55	600	700			600	700	S55266-V153	**VPF54.50F25**
65	24.4	4.5	32	600	700			600	700	S55266-V154	**VPF54.65F25**
65	37.7	6.4	50	600	700			600	700	S55266-V155	**VPF54.65F35**
80	35.7	6.8	22	600	700			600	700	S55266-V156	**VPF54.80F35**
80	49.9	8.5	40	600	700			600	700	S55266-V157	**VPF54.80F45**
100	69.6	12.2	33			600	700	600	700	S55266-V158	**VPF54.100F70**
100	90.9	14.8	45			600	700	600	700	S55266-V159	**VPF54.100F90**

Accessories for VPF54..

Product Title	Data sheet	Stock no.	Product no.
Electronic manometer for Siemens combi valves	CE1N4853	BPZ:ALE10	**ALE10**
Measuring lines and tips for Siemens combi valves	CE1N4853	BPZ:ALE11	**ALE11**
Spare nipples for VPI45.., set of 2, for VPI45..	CE1N4853	BPZ:ALP45	**ALP45**
DPR replacement for VPF44.100F70/VPF54.100F70	A6V12273951	S55264-V161	**ALR100F70**
DPR replacement for VPF44.100F90/VPF54.100F90	A6V12273951	S55264-V162	**ALR100F90**
DPR replacement for VPF44.50F15/VPF54.50F15	A6V12273951	S55264-V155	**ALR50F15**
DPR replacement for VPF44.50F25/VPF54.50F25	A6V12273951	S55264-V156	**ALR50F25**
DPR replacement for VPF54.65F25	A6V12273951	S55264-V163	**ALR65F25-HP**
DPR replacement for VPF54.65F35	A6V12273951	S55264-V164	**ALR65F35-HP**
DPR replacement for VPF44.80F35/VPF54.80F35	A6V12273951	S55264-V159	**ALR80F35**
DPR replacement for VPF44.80F45/VPF54.80F45	A6V12273951	S55264-V160	**ALR80F45**
Blanking plug for P/T ports	CE1N4853	S55264-V115	**ALP46**
Drain ball valve inclusive O-ring	CE1N4853	S55264-V116	**ALP47**
Combined P/T port and drain ball valve with red ribbon	CE1N4853	S55264-V117	**ALP48**
Long P/T ports (set of 2 pieces)	CE1N4853	S55264-V118	**ALP49**

Combinable actuator for VPF54..

Operating voltage [V]	Positioning signal	Positioning time [s]	Data sheet	Stock no.	Product no.
AC 230	3-position	30	N4509	S55150-A118	**SAX31P03**
AC/DC 24	DC 0...10 V DC 4...20 mA 0...1000 Ohm	30	N4509	S55150-A114	**SAX61P03**
AC/DC 24	Modbus RTU	30	N4509	S55150-A143	**SAX61P03/MO**
AC/DC 24	3-position	30	N4509	S55150-A116	**SAX81P03**
AC 230	3-position	120	N4510	S55150-A121	**SAV31P00**
AC/DC 24	DC 0...10 V DC 4...20 mA 0...1000 Ohm	120	N4510	S55150-A119	**SAV61P00**
AC/DC 24	Modbus RTU	120	N4510	S55150-A144	**SAV61P00/MO**
AC/DC 24	3-position	120	N4510	S55150-A120	**SAV81P00**
AC 24 DC 24	3-position DC 0...10 V DC 4...20 mA	20 mm: 40 40 mm: 80	N4833	S55150-A130	**SQV91P30**
AC 24 DC 24	3-position DC 0...10 V DC 4...20 mA	40	N4833	S55150-A131	**SQV91P40**

Globe and pressure independent control valve (PICV)
Threaded pressure independent control valves

EVG..

Intelligent Valve - as a sensor controlled pressure independent control valve PN16 with threaded connection including flow and capacity measurement.

- RS485 for Modbus RTU integration e.g. into Climatix
- Ethernet Daisychain for BACnet IP integration into Desigo
- Cloud connectivity to extend functionality with various Software-as-a-Service (SaaS) packages such as Building Operator – a cloud-based application to manage fleet of sites
- Power supply AC/DC 24 V
- Control signal analog DC 0/2..10 V or 4..20 mA
- With threaded connections to ISO 228/1
- For use in heating, ventilating, air conditioning systems as a control valve and for dynamic hydraulic balancing
- For use with cooling, chilled, low and high temperature water in closed circuits
- Volumetric flow 500...18'000 l/h

Data sheet	A6V11444716
PN class	PN 16
Operating voltage	AC 24 V DC 24 V
Frequency	50 Hz
Power consumption	8.5 VA 5 W
Communication	Ethernet - BACnet IP Ethernet - Cloud RS485 - Modbus RTU
Universal inputs	2
Universal input, signal	Pt1000 LG-Ni1000 DC 0...10 V DC 2...10 V 4...20 mA
Analog outputs	1
Analog output, signal	DC 2...10 V DC 0...10 V DC 4...20 mA
Analog inputs, number	2
Analog input, signal	Pt1000
Δp_{max}	600 kPa
Measurement accuracy	Volume flow: +/- 2% (25...100% V100) Temperature difference (at 20 °C): +/- 0.2 K
Control accuracy, volume flow	+/- 5 % (25...100 % V100)
Rangeability	1:100
Leakage rate	"Watertight" as per EN 60534-4 L/1, better than class 5
Valve characteristic	selectable
Medium	Low-temperature hot water High-temperature hot water Chilled water
Medium temperature	1...120 °C
Permissible operating pressure	1600 kPa
Material, valve body	Brass
Material, inside set	Brass
Warranty	60 Months

Range overview EVG..

DN	Vol. flow V [m³/h]	Vol. flow Vmin [m³/h]	k_{vs} [m³/h]	GLA.. Δp_{max} [kPa]	GLA.. Δp_s [kPa]	Stock no.	Product no.
15	1.5	0.45	3.7	600	1400	S55300-M100	**EVG4U10E015**
20	3	0.9	5	600	1400	S55300-M101	**EVG4U10E020**
25	4.5	1.35	10	600	1400	S55300-M102	**EVG4U10E025**

Range overview EVG..

DN	Vol. flow V [m³/h]	Vol. flow Vmin [m³/h]	k_{vs} [m³/h]	GLA.. Δp_{max} [kPa]	GLA.. Δp_s [kPa]	Stock no.	Product no.
32	7	2.1	11	600	1000	S55300-M103	**EVG4U10E032**
40	11.5	3.5	26	600	800	S55300-M104	**EVG4U10E040**
50	18	5.4	30	600	600	S55300-M105	**EVG4U10E050**

Accessories for EVG..

Product Title	Data sheet	Stock no.	Product no.
Fittings, pipe-side with threaded connection		BPZ:ALG..2	**ALG..2**
Control valve section PN16 for Intelligent Valve EVG4U10.. for line sizes DN 15...50 with outside threaded connection	A6V11444716	BPZ:AVG4..	**AVG4..VAG**
Protection pocket G ¼ B, M10x1, brass, Ø 5.2x40 mm, for temperature sensor Ø 5.2x26 mm	A6V11444716	S55845-Z231	**EZT-M40**
Pair of temperature sensors Pt1000, length 26.5 mm, ø 5.2 mm, type DS, with screw connector M10 × 1, cable length 1.5 m	A6V11444716	S55845-Z229	**EZU10-2615**
Wall mount socket for Intelligent Valve Controller Box ASE4U10E		S55845-Z234	**EZU-WA**
Spacer for mounting Intelligent Valve Controller Box ASE4U10E with a 25 mm distance on the flow sensor		S55845-Z236	**EZU-WB**
Ball valve Rp ½" for sensor DS M10x1 mm, length 27.5 mm or Ø 5.2x45 mm		S55563-F104	**WZT-K12**
Ball valve Rp ¾" for sensor DS M10x1 mm, length = 27.5 mm or Ø 5.2x45 mm		S55563-F120	**WZT-K34**
Ball valve Rp 1" for sensor DS M10x1 mm, length 27.5 mm or Ø 5.2x45 mm		S55563-F119	**WZT-K1**
Welding sleeve with threaded hole for temperature sensor DS M10×1 mm		S55563-F121	**WZT-G10**
Strainer, inside threaded		BPZ:ALX..	**ALX..**
Insulation covers for ball valves		BPZ:ALI..	**ALI..**
		BPZ:ALG..G..	**ALG..G..**
	A6V11444716 / A6V12028437	BPZ:AVG4E..	**AVG4E..**

8

EXG..

Intelligent Valve 3-Port configuration as a sensor controlled pressure independent control valve PN16 threaded connection including flow and capacity measurement.

- RS485 for Modbus RTU integration e.g. into Climatix
- Ethernet Daisychain for BACnet IP integration into Desigo
- Cloud connectivity to extend functionality with various Software-as-a-Service (SaaS) packages such as Building Operator – a cloud-based application to manage fleet of sites.
- Power supply AC/DC 24 V
- Control signal analog DC 0/2..10 V or 4..20 mA
- With threaded connections to ISO 228/1
- For use in heating, ventilating, air conditioning systems as a control valve and for dynamic hydraulic balancing
- For use with cooling, chilled, low and high temperature water in closed circuits
- Volumetric flow 360...12'000 l/h

Data sheet	A6V11444716
PN class	PN 16
Operating voltage	AC 24 V DC 24 V
Frequency	50 Hz
Power consumption	8.5 VA / 5 W
Communication	Ethernet - BACnet IP Ethernet - Cloud RS485 - Modbus RTU
Universal inputs	2
Universal input, signal	Pt1000 LG-Ni1000 DC 0...10 V DC 2...10 V 4...20 mA
Analog outputs, number	1
Analog outputs	1
Analog output, signal	DC 2...10 V DC 0...10 V DC 4...20 mA
Analog inputs, number	2
Analog input, signal	Pt1000
Δp_{max}	200 kPa
Measurement accuracy	Volume flow: +/- 2% (25...100% V100) Temperature difference (at 20 °C): +/- 0.2 K
Control accuracy, volume flow	+/- 5 % (25...100 % V100)
Rangeability	1:100
Leakage rate	"Watertight" as per EN 60534-4 L/1, better than class 4 Bypass: <1 % of kvs
Valve characteristic	selectable
Medium	Low-temperature hot water High-temperature hot water Chilled water
Medium temperature	1...120 °C
Permissible operating pressure	1600 kPa
Material, valve body	Brass
Material, inside set	Brass
Packaging unit	Unit
Warranty	60 Months

Range overview EXG..

DN	Vol. flow V [m³/h]	Vol. flow Vmin [m³/h]	k_{vs} [m³/h]	GLA.. Δp_{max} [kPa]	Stock no.	Product no.

Range overview EXG..

DN	Vol. flow V [m³/h]	Vol. flow Vmin [m³/h]	k_{vs} [m³/h]	GLA.. Δp_{max} [kPa]	Stock no.	Product no.
15	1.2	0.36	3.7	200	S55300-M111	**EXG4U10E015**
20	2	0.6	4	200	S55300-M112	**EXG4U10E020**
25	3.2	0.96	8	200	S55300-M113	**EXG4U10E025**
32	5	1.5	10	200	S55300-M114	**EXG4U10E032**
40	8	2.4	18	200	S55300-M115	**EXG4U10E040**
50	12	3.6	26	200	S55300-M116	**EXG4U10E050**

Accessories for EXG..

Product Title	Data sheet	Stock no.	Product no.
Protection pocket G ¼ B, M10x1, brass, Ø 5.2x40 mm, for temperature sensor Ø 5.2x26 mm	A6V11444716	S55845-Z231	**EZT-M40**
Pair of temperature sensors Pt1000, length 26.5 mm, ø 5.2 mm, type DS, with screw connector M10 × 1, cable length 1.5 m	A6V11444716	S55845-Z229	**EZU10-2615**
Wall mount socket for Intelligent Valve Controller Box ASE4U10E		S55845-Z234	**EZU-WA**
Spacer for mounting Intelligent Valve Controller Box ASE4U10E with a 25 mm distance on the flow sensor		S55845-Z236	**EZU-WB**
Ball valve Rp ½" for sensor DS M10x1 mm, length 27.5 mm or Ø 5.2x45 mm		S55563-F104	**WZT-K12**
Ball valve Rp ¾" for sensor DS M10x1 mm, length = 27.5 mm or Ø 5.2x45 mm		S55563-F120	**WZT-K34**
Ball valve Rp 1" for sensor DS M10x1 mm, length 27.5 mm or Ø 5.2x45 mm		S55563-F119	**WZT-K1**
Welding sleeve with threaded hole for temperature sensor DS M10×1 mm		S55563-F121	**WZT-G10**
Strainer, inside threaded		BPZ:ALX..	**ALX..**
Insulation covers for ball valves		BPZ:ALI..	**ALI..**
		BPZ:ALG..G..	**ALG..G..**
Control valve section 3-Port PN16 for Intelligent Valve EXG4U10.. for line sizes DN 15...50 with outside threaded connection	A6V11444716	BPZ:AVG4..VBG	**AVG4..VBG**
	A6V11444716 / A6V12028437	BPZ:AVG4E..	**AVG4E..**

8

VPD..

2-port seat MiniCombiValves (PICV)

Combivalves with presetting, PN 10, with connections according to EN215 for
- ventilation and air conditioning plants for control on the water side and automatic hydraulic balancing of terminal units, such as fan coils, induction units, and in heat exchangers for heating or cooling.
- heating zones like self-contained heating systems, apartments, individual rooms, etc.
- closed circuits

Suitable media: Water (to VDI 2035), water with anti-freeze.

The valves can be operated with Siemens actuators type SSA.. / STA.. and thermostatic actuators RTN..

Data sheet	N2185
Stroke	2.5 mm
PN class	PN 10
Medium	Water with anti-freeze
Medium temperature	1...90 °C
Permissible operating pressure	1000 kPa
Material, valve body	Brass, nickel-plated
Material, inside set	EPDM
Warranty	60 Months

Range overview VPD..

DN	Con-nect. thread	Vol. flow V [l/h]	kv at 0.5 mm stroke [m³/h]	ΔP_w [kPa]	Δp_{max} [kPa]	ΔP_{min} [kPa]	Stock no.	Product no.
10	Rp/R ⅜"	45	0.05	5	200	6	BPZ:VPD110A-45	**VPD110A-45**
10	Rp/R ⅜"	90	0.09	5	200	8	BPZ:VPD110A-90	**VPD110A-90**

8

Angle MiniCombiValves (PICV)

VPE..

Combivalves with presetting, PN 10, with connections according to EN215 for
- ventilation and air conditioning plants for control on the water side and automatic hydraulic balancing of terminal units, such as fan coils, induction units, and in heat exchangers for heating or cooling.
- heating zones like self-contained heating systems, apartments, individual rooms, etc.
- closed circuits

Suitable media: Water (to VDI 2035), water with anti-freeze.

The valves can be operated with Siemens actuators type SSA.. / STA.. and thermostatic actuators RTN..

Data sheet	N2185
Stroke	2.5 mm
PN class	PN 10
Medium	Water with anti-freeze
Medium temperature	1...90 °C
Permissible operating pressure	1000 kPa
Material, valve body	Brass, nickel-plated
Material, inside set	EPDM
Warranty	60 Months

Range overview VPE..

DN	Con-nect. thread	Vol. flow V [l/h]	kv at 0.5 mm stroke [m³/h]	ΔP_w [kPa]	Δp_{max} [kPa]	ΔP_{min} [kPa]	Stock no.	Product no.
15	Rp/R ½"	45	0.05	5	200	6	BPZ:VPE115A-45	**VPE115A-45**
15	Rp/R ½"	90	0.09	5	200	8	BPZ:VPE115A-90	**VPE115A-90**
15	Rp/R ½"	145	0.15	5	200	10	BPZ:VPE115A-145	**VPE115A-145**

Combinable actuator for VPD.. / VPE..

Operating voltage [V]	Positioning signal	Positioning time [s]	Cable length [m]	Data sheet	Stock no.	Product no.
AC 230	2-position	210	1	N4884	S55174-A101	**STA23**
AC 24	DC 0...10 V	270	2	N4884	S55174-A104	**STA63**
AC 24 DC 24	2-position PDM	270	1	N4884	S55174-A100	**STA73**
AC 24 DC 24	2-position PDM	270		N4884	S55174-A109	**STA73/00**
				N2111	BPZ:RTN51	**RTN51**
				N4211	BPZ:RTN51G	**RTN51G**
				N2111	BPZ:RTN71	**RTN71**
				N2111	BPZ:RTN81	**RTN81**
DC 21...30 24		50/100	1.5	A6V11858280	S55180-A111	**SSA118.09HKN**
AC 230	3-position	150	1.5	N4893	BPZ:SSA31.1	**SSA31.1**
AC 24	3-position	150	1.5	N4893	BPZ:SSA81.1	**SSA81.1**
AC 24	3-position	67.5	1.5	A6V11858276	S55180-A106	**SSA131.00**
AC 24 DC 24	4...20 mA	25	1.5	A6V11858278	S55180-A110	**SSA151.05HF**
AC 24 DC 24	DC 0...10 V	25	1.5	A6V11858276	S55180-A107	**SSA161.05**

Combinable actuator for VPD.. / VPE..

Operating voltage [V]	Positioning signal	Positioning time [s]	Cable length [m]	Data sheet	Stock no.	Product no.
AC 24 DC 24	DC 0...10 V	25	1.5	A6V11858278	S55180-A108	**SSA161.05HF**
AC 24 DC 24	DC 0...10 V	25	1.5	A6V11858278	S55180-A109	**SSA161E.05HF**
AC 230	3-position	67.5	1.5	A6V11858276	S55180-A105	**SSA331.00**

Combinable actuator for VPU..

Operating voltage [V]	Positioning signal	Positioning time [s]	Cable length [m]	Data sheet	Stock no.	Product no.
AC 230	2-position	210	1	N4884	S55174-A101	**STA23**
AC 24	DC 0...10 V	270	2	N4884	S55174-A104	**STA63**
AC 24 DC 24	2-position PDM	270	1	N4884	S55174-A100	**STA73**
AC 24 DC 24	2-position PDM	270		N4884	S55174-A109	**STA73/00**
				N2111	BPZ:RTN51	**RTN51**
				N4211	BPZ:RTN51G	**RTN51G**
				N2111	BPZ:RTN71	**RTN71**
				N2111	BPZ:RTN81	**RTN81**
DC 21...30 24		50/100	1.5	A6V11858280	S55180-A111	**SSA118.09HKN**
AC 230	3-position	150	1.5	N4893	BPZ:SSA31.1	**SSA31.1**
AC 24	3-position	150	1.5	N4893	BPZ:SSA81.1	**SSA81.1**
AC 24	3-position	67.5	1.5	A6V11858276	S55180-A106	**SSA131.00**
AC 24 DC 24	4...20 mA	25	1.5	A6V11858278	S55180-A110	**SSA151.05HF**
AC 24 DC 24	DC 0...10 V	25	1.5	A6V11858276	S55180-A107	**SSA161.05**
AC 24 DC 24	DC 0...10 V	25	1.5	A6V11858278	S55180-A108	**SSA161.05HF**
AC 24 DC 24	DC 0...10 V	25	1.5	A6V11858278	S55180-A109	**SSA161E.05HF**
AC 230	3-position	67.5	1.5	A6V11858276	S55180-A105	**SSA331.00**

VPD..-135

Straightway Radiator PICV

Combivalves with presetting, PN 10, with connections according to DIN 215 row D and row F for
- ventilation and air conditioning plants for control on the water side and automatic hydraulic balancing of terminal units, such as fan coils, induction units, and in heat exchangers for heating or cooling.
- heating zones like self-contained heating systems, apartments, individual rooms, etc.
- closed circuits

Suitable media: Water (to VDI 2035), water with anti-freeze.
The valves can be operated with Siemens actuators type SSA.., STA.. and thermostatic actuators RTN..

Data sheet	A6V13089932
Stroke	2.5 mm
PN class	PN 10
Medium	Water with anti-freeze
Medium temperature	2...95 °C
Permissible operating pressure	1000 kPa
Material, valve body	Brass, nickel-plated
Material, inside set	EPDM
Warranty	60 Months

Range Overview VPD..-135

DN	Con-nect. thread	Vol. flow V [l/h]	ΔP_w [bar]	Δp_{max} [kPa]	ΔP_{min} [kPa]	Stock no.	Product no.
10	Rp/R ⅜"	135	10	60	10	S55264-V165	**VPD110A-135**
15	Rp/R ½"	135	10	60	10	S55264-V166	**VPD115A-135**
20	Rp/R ¾"	135	10	60	10	S55264-V167	**VPD120A-135**
10	Rp/R ⅜"	135	10	60	10	S55264-V173	**VPD210A-135**
15	Rp/R ½"	135	10	60	10	S55264-V174	**VPD215A-135**
20	Rp/R ¾"	135	10	60	10	S55264-V175	**VPD220A-135**

Combinable actuator for VPD..-135

Operating voltage	Positioning signal	Positioning time	Cable length	Data sheet	Stock no.	Product no.
				A6V12968650	BPZ:STA..21..	**STA..**

Accessories for VPD..-135

Product Title	Data sheet	Stock no.	Product no.
Electronic manometer for Siemens combi valves	CE1N4853	BPZ:ALE10	**ALE10**

8

Globe and pressure independent control valve (PICV)
Threaded pressure independent control valves

VPE..-135

Angle Radiator PICV

Combivalves with presetting, PN 10, with connections according to DIN 215 row D and row F for
- ventilation and air conditioning plants for control on the water side and automatic hydraulic balancing of terminal units, such as fan coils, induction units, and in heat exchangers for heating or cooling.
- heating zones like self-contained heating systems, apartments, individual rooms, etc.
- closed circuits

Suitable media: Water (to VDI 2035), water with anti-freeze.
The valves can be operated with Siemens actuators type SSA.., STA.. and thermostatic actuators RTN..

Data sheet	A6V13089932
Stroke	2.5 mm
PN class	PN 10
Medium	Water with anti-freeze
Medium temperature	2...95 °C
Permissible operating pressure	1000 kPa
Material, valve body	Brass, nickel-plated
Material, inside set	EPDM
Warranty	60 Months

Range Overview VPE..-135

DN	Con-nect. thread	Vol. flow V [l/h]	ΔP_w [bar]	Δp_{max} [kPa]	ΔP_{min} [kPa]	Stock no.	Product no.
10	Rp/R ⅜"	135	10	60	10	S55264-V168	**VPE110A-135**
15	Rp/R ½"	135	10	60	10	S55264-V169	**VPE115A-135**
20	Rp/R ¾"	135	10	60	10	S55264-V170	**VPE120A-135**
10	Rp/R ⅜"	135	10	60	10	S55264-V176	**VPE210A-135**
15	Rp/R ½"	135	10	60	10	S55264-V177	**VPE215A-135**
20	Rp/R ¾"	135	10	60	10	S55264-V178	**VPE220A-135**

Combinable actuator for VPE..-135

Operating voltage	Positioning signal	Positioning time	Cable length	Data sheet	Stock no.	Product no.
				A6V12968650	BPZ:STA..21..	**STA..**

Accessories for VPE..-135

Product Title	Data sheet	Stock no.	Product no.
Electronic manometer for Siemens combi valves	CE1N4853	BPZ:ALE10	**ALE10**

Axial Radiator PICV

VPU..-135

Combivalves with presetting, PN 10, with connections according to DIN 215 row D and row F for
- ventilation and air conditioning plants for control on the water side and automatic hydraulic balancing of terminal units, such as fan coils, induction units, and in heat exchangers for heating or cooling.
- heating zones like self-contained heating systems, apartments, individual rooms, etc.
- closed circuits

Suitable media: Water (to VDI 2035), water with anti-freeze.
The valves can be operated with Siemens actuators type SSA.., STA.. and thermostatic actuators RTN..

Data sheet	A6V13089932
Stroke	2.5 mm
PN class	PN 10
Medium	Water with anti-freeze
Medium temperature	2...95 °C
Permissible operating pressure	1000 kPa
Material, valve body	Brass, nickel-plated
Material, inside set	EPDM
Warranty	60 Months

Range Overview VPU..-135

DN	Con-nect. thread	Vol. flow V [l/h]	ΔP_w [bar]	Δp_{max} [kPa]	ΔP_{min} [kPa]	Stock no.	Product no.
10	Rp/R ⅜"	135	10	60	10	S55264-V171	**VPU110A-135**
15	Rp/R ½"	135	10	60	10	S55264-V172	**VPU115A-135**

Combinable actuator for VPU..-135

Operating voltage	Positioning signal	Positioning time	Cable length	Data sheet	Stock no.	Product no.
				A6V12968650	BPZ:STA..21..	**STA..**

Accessories for VPU..-135

Product Title	Data sheet	Stock no.	Product no.
Electronic manometer for Siemens combi valves	CE1N4853	BPZ:ALE10	**ALE10**

8

Globe and pressure independent control valve (PICV)
Threaded pressure independent control valves

VPP46..

Combi valves (PICV) PN25, externally threaded

Pre-adjustable Combi valves, PN 25, externally threaded for
- ventilation and air conditioning plants for control on the water side and automatic hydraulic balancing of terminal units, such as fan coils, induction units, and in heat exchangers for heating or cooling.
- heating zones like self-contained heating systems, apartments, individual rooms, etc.
- closed circuits

Volumetric flow 30...4000 l/h. With or without differential pressure test points.

Data sheet	N4855
Stroke	Up to DN 15: 2.5 mm DN 20: 5 mm DN 25-32: 5.5 mm
Leakage rate	Class IV (0...0.01% of volumetric flow V_{100})
PN class	PN 25
Medium	Water Water with anti-freeze
Medium temperature	1...120 °C
Ambient temperature, operation	1...50 °C
Valve characteristic	Linear
Permissible operating pressure	2500 kPa
Material, valve body	Brass CW602N (DZR)
Material, inside set	Dezincification resistant brass (DR), CW602N, stainless steel, PPS
Mounting position	Upright to 90° inclined
Warranty	60 Months

Range overview VPP46..

DN	Con-nect. thread	Vol. flow V [l/h]	Vol. flow Vmin [l/h]	STA..3.. Δp_{max} [kPa]	STA..3.. ΔP_{min} [kPa]	SSA.. Δp_{max} [kPa]	SSA.. ΔP_{min} [kPa]	Stock no.	Product no.
10	G ½"	200	30	600	16	600	16	S55264-V101	**VPP46.10L0.2**
10	G ½"	200	30	600	16	600	16	S55264-V105	**VPP46.10L0.2Q**
10	G ½"	370	65	600	17	600	17	S55264-V131	**VPP46.10L0.4**
10	G ½"	370	65	600	17	600	17	S55264-V132	**VPP46.10L0.4Q**
15	G ¾"	200	30	600	16	600	16	S55264-V102	**VPP46.15L0.2**
15	G ¾"	200	30	600	16	600	16	S55264-V106	**VPP46.15L0.2Q**
15	G ¾"	575	100	600	19	600	19	S55264-V103	**VPP46.15L0.6**
15	G ¾"	575	100	600	19	600	19	S55264-V107	**VPP46.15L0.6Q**
20	G 1"	1330	220	600	21	600	22	S55264-V104	**VPP46.20F1.4**
20	G 1"	1330	220	600	21	600	22	S55264-V108	**VPP46.20F1.4Q**
25	G 1¼"	1800	280	600	39	600	39	S55264-V121	**VPP46.25F1.8**
25	G 1¼"	1800	280	600	39	600	39	S55264-V123	**VPP46.25F1.8Q**
32	G 1½"	4000	550	600	24	600	28	S55264-V122	**VPP46.32F4**
32	G 1½"	4000	550	600	24	600	28	S55264-V124	**VPP46.32F4Q**

Further information to the actuators please see "Actuators for combi valves with 2.5 mm stroke" and "Actuators for combi valves with 2.5 / 5 mm stroke and radiator valves".
VPP46..Q: with testpoint
Check the datasheet for detailed dPmin values per presetting

Accessories for VPP46..

Product Title	Data sheet	Stock no.	Product no.
Electronic manometer for Siemens combi valves	CE1N4853	BPZ:ALE10	**ALE10**
Measuring lines and tips for Siemens combi valves	CE1N4853	BPZ:ALE11	**ALE11**
Spare nipples for VPI45.., set of 2, for VPI45..	CE1N4853	BPZ:ALP45	**ALP45**
Black spare valve protection cap (set of 2 pieces)	CE1N4853	S55264-V119	**ALP50**
Black spare valve protection cap (set of 2 pieces)	A6V11877580	S55264-V153	**ALP53**
Blanking plug for P/T ports	CE1N4853	S55264-V115	**ALP46**

Accessories for VPP46..

Product Title	Data sheet	Stock no.	Product no.
Drain ball valve inclusive O-ring	CE1N4853	S55264-V116	**ALP47**
Combined P/T port and drain ball valve with red ribbon	CE1N4853	S55264-V117	**ALP48**
Long P/T ports (set of 2 pieces)	CE1N4853	S55264-V118	**ALP49**

Combinable actuator for VPP46..

Operating voltage [V]	Positioning signal	Positioning time [s]	Data sheet	Stock no.	Product no.
AC 230	2-position	210	N4884	S55174-A101	**STA23**
AC 24	DC 0...10 V	270	N4884	S55174-A104	**STA63**
AC 24 DC 24	2-position PDM	270	N4884	S55174-A100	**STA73**
AC 24 DC 24	2-position PDM	270	N4884	S55174-A109	**STA73/00**
AC 230	3-position	150	N4893	BPZ:SSA31.1	**SSA31.1**
AC 24	3-position	150	N4893	BPZ:SSA81.1	**SSA81.1**
AC 24	3-position	67.5	A6V11858276	S55180-A106	**SSA131.00**
AC 24 DC 24	4...20 mA	25	A6V11858278	S55180-A110	**SSA151.05HF**
AC 24 DC 24	DC 0...10 V	25	A6V11858276	S55180-A107	**SSA161.05**
AC 24 DC 24	DC 0...10 V	25	A6V11858278	S55180-A108	**SSA161.05HF**
AC 24 DC 24	DC 0...10 V	25	A6V11858278	S55180-A109	**SSA161E.05HF**
AC 230	3-position	67.5	A6V11858276	S55180-A105	**SSA331.00**
AC 230	2-position (SPST)	50 Hz:10 60 Hz:8.3	A6V10446174	S55176-A104	**SUA21/3**
AC 230	2-position (SPST)	50 Hz:10 60 Hz:8.3	A6V11780780	S55176-A105	**SUA21/3P**
AC 230	2-position (SPST)	50 Hz:12 60 Hz:10	A6V11780777	S55176-A106	**SUE21P**

Globe and pressure independent control valve (PICV)
Threaded pressure independent control valves

VPI46..

Combi valves (PICV) PN25, internally threaded

Pre-adjustable Combi valves, PN 25, internally threaded for
- ventilation and air conditioning plants for control on the water side and automatic hydraulic balancing of terminal units, such as fan coils, induction units, and in heat exchangers for heating or cooling.
- heating zones like self-contained heating systems, apartments, individual rooms, etc.
- closed circuits

Volumetric flow 30...11500 l/h. With or without differential pressure test points.

Data sheet	N4855
Stroke	Up to DN 15: 2.5 mm DN 20: 5 mm DN 25-32: 5.5 mm DN 40-50: 15 mm
Leakage rate	Class IV (0...0.01% of volumetric flow V_{100})
PN class	PN 25
Medium	Water Water with anti-freeze
Medium temperature	1...120 °C
Ambient temperature, operation	1...50 °C
Valve characteristic	Linear
Permissible operating pressure	2500 kPa
Material, valve body	Brass CW602N (DZR)
Material, inside set	Dezincification resistant brass (DR), CW602N, stainless steel, PPS
Mounting position	Upright to 90° inclined
Warranty	60 Months

Range overview VPI46..

DN	Con-nect. thread	Vol. flow V [l/h]	Vol. flow Vmin [l/h]	SUA.. Δp_{max} [kPa]	SUA.. ΔP_{min} [kPa]	SSA.. Δp_{max} [kPa]	SSA.. ΔP_{min} [kPa]	STA..3.. Δp_{max} [kPa]	STA..3.. ΔP_{min} [kPa]	SAY..P.. Δp_{max} [kPa]	SAY..P.. ΔP_{min} [kPa]	Stock no.	Product no.
15	Rp ½"	200	30	600	16	600	16	600	16			S55264-V109	**VPI46.15L0.2**
15	Rp ½"	200	30	600	16	600	16	600	16			S55264-V112	**VPI46.15L0.2Q**
15	Rp ½"	575	100	600	19	600	19	600	19			S55264-V110	**VPI46.15L0.6**
15	Rp ½"	575	100	600	19	600	19	600	19			S55264-V113	**VPI46.15L0.6Q**
20	Rp ¾"	1330	220			600	22	600	21			S55264-V111	**VPI46.20F1.4**
20	Rp ¾"	1330	220			600	22	600	21			S55264-V114	**VPI46.20F1.4Q**
25	Rp 1"	1800	280			600	39	600	39			S55264-V125	**VPI46.25F1.8**
25	Rp 1"	1800	280			600	39	600	39			S55264-V127	**VPI46.25F1.8Q**
32	Rp 1¼"	4000	550			600	28	600	24			S55264-V126	**VPI46.32F4**
32	Rp 1¼"	4000	550			600	28	600	24			S55264-V128	**VPI46.32F4Q**
40	Rp 1½"	9500	1370							600	25	S55264-V129	**VPI46.40F9.5Q**
50	Rp ½"	11500	1400							600	36	S55264-V130	**VPI46.50F12Q**

Further information to the actuators please see "Actuators for combi valves with 2.5 mm stroke" and "Actuators for combi valves with 2.5 / 5 mm stroke and radiator valves".
VPI46..Q: with testpoint.
Check the datasheet for detailed dPmin values per presetting

Accessories for VPI46..

Product Title	Data sheet	Stock no.	Product no.
Electronic manometer for Siemens combi valves	CE1N4853	BPZ:ALE10	**ALE10**
Measuring lines and tips for Siemens combi valves	CE1N4853	BPZ:ALE11	**ALE11**
Spare nipples for VPI45.., set of 2, for VPI45..	CE1N4853	BPZ:ALP45	**ALP45**
Black spare valve protection cap (set of 2 pieces)	CE1N4853	S55264-V119	**ALP50**
Black spare valve protection cap (set of 2 pieces)	A6V11877580	S55264-V153	**ALP53**
Blanking plug for P/T ports	CE1N4853	S55264-V115	**ALP46**

Accessories for VPI46..

Product Title	Data sheet	Stock no.	Product no.
Drain ball valve inclusive O-ring	CE1N4853	S55264-V116	**ALP47**
Combined P/T port and drain ball valve with red ribbon	CE1N4853	S55264-V117	**ALP48**
Long P/T ports (set of 2 pieces)	CE1N4853	S55264-V118	**ALP49**

Combinable actuator for VPI46..

Operating voltage [V]	Positioning signal	Positioning time [s]	Data sheet	Stock no.	Product no.
AC 230	2-position	210	N4884	S55174-A101	**STA23**
AC 24	DC 0...10 V	270	N4884	S55174-A104	**STA63**
AC 24 DC 24	2-position PDM	270	N4884	S55174-A100	**STA73**
AC 24 DC 24	2-position PDM	270	N4884	S55174-A109	**STA73/00**
AC 230	3-position	150	N4893	BPZ:SSA31.1	**SSA31.1**
AC 24	3-position	150	N4893	BPZ:SSA81.1	**SSA81.1**
AC 24	3-position	67.5	A6V11858276	S55180-A106	**SSA131.00**
AC 24 DC 24	4...20 mA	25	A6V11858278	S55180-A110	**SSA151.05HF**
AC 24 DC 24	DC 0...10 V	25	A6V11858276	S55180-A107	**SSA161.05**
AC 24 DC 24	DC 0...10 V	25	A6V11858278	S55180-A108	**SSA161.05HF**
AC 24 DC 24	DC 0...10 V	25	A6V11858278	S55180-A109	**SSA161E.05HF**
AC 230	3-position	67.5	A6V11858276	S55180-A105	**SSA331.00**
AC 230	2-position (SPST)	50 Hz:10 60 Hz:8.3	A6V10446174	S55176-A104	**SUA21/3**
AC 230	2-position (SPST)	50 Hz:10 60 Hz:8.3	A6V11780780	S55176-A105	**SUA21/3P**
AC 230	2-position (SPST)	50 Hz:12 60 Hz:10	A6V11780777	S55176-A106	**SUE21P**
AC 230	3-position	30	A6V10628469	S55150-A132	**SAY31P03**
AC/DC 24	DC 0...10 V DC 4...20 mA 0...1000 Ohm	30	A6V10628469	S55150-A133	**SAY61P03**
AC/DC 24	3-position	30	A6V10628469	S55150-A134	**SAY81P03**

Globe and pressure independent control valve (PICV)
Threaded pressure independent control valves

6-way PICV, PN 25, externally threaded

VWPG51..

Data sheet	A6V12815016
Leakage rate	Class IV, 0...0.01 % of kvs
PN class	PN 25
Medium	Chilled water Low-temperature hot water High-temperature hot water Water with anti-freeze
Medium temperature	0...90 °C
Ambient temperature, operation	0...90 °C
Material, valve body	Brass CW602N (DZR)
Material, inside set	DZR (nickel plated); PTFE; PPS 40%; Stainless steel; HNBR; PPO; EPDM
Warranty	60 Months

Range overview VWPG51..

DN	Con-nect. thread	Vol. flow V [l/h]	Vol. flow Vmin [l/h]	Δp_{max} [kPa]	Stock no.	Product no.
15	G ¾"	1200	210	400	S55264-V182	**VWPG51.15F1.2**
15	G ¾"	1200	210	400	S55264-V181	**VWPG51.15F1.2Q**
15	G ¾"	820	35	400	S55264-V180	**VWPG51.15L0.9**
15	G ¾"	820	35	400	S55264-V179	**VWPG51.15L0.9Q**
20	G 1"	4250	460	400	S55264-V186	**VWPG51.20F4.3**
20	G 1"	4250	460	400	S55264-V185	**VWPG51.20F4.3Q**

Accessories for VWPG51..

Product Title	Data sheet	Stock no.	Product no.
6-port mPICV couplings DZR brass CW602N DN15 (2 pieces incl. gaskets) G ¾ " - R ½ "	A6V12815016	S55846-Z150	**ALN14.152B**
6-port mPICV couplings DZR brass CW602N DN15 (2 pieces incl. gaskets) G ¾ " - R ¾ "	A6V12815016	S55846-Z151	**ALN14.202B**
6-port mPICV couplings DZR brass CW602N DN20 (2 pieces incl. gaskets) G 1 " - R ¾ "	A6V12815016	S55846-Z152	**ALN15.202B/1**
6-port mPICV couplings DZR brass CW602N DN20 (2 pieces incl. gaskets) G 1 " - R 1 "	A6V10564480	S55846-Z153	**ALN15.252B**
6-port mPICV P/T coupling DN15 G 3/4" - G 1/2"A	A6V12815016	S55846-Z142	**ALP55**
6-port mPICV P/T coupling DN15 G 3/4" - G 3/4"A	A6V12815016	S55846-Z143	**ALP56**
6-mPICV P/T Coupling DN20 G 1" - G 3/4"A	A6V12815016	S55846-Z144	**ALP57**
6-port mPICV P/T coupling DN20 G 1" - G 1"A	A6V12815016	S55846-Z145	**ALP58**
6-port mPICV spare nipple P/T port DN15	A6V12815016	S55846-Z148	**ALP59**
6-port mPICV spare nipple P/T port DN20	A6V12815016	S55846-Z149	**ALP60**

On/Off PICV, PN 25, externally threaded

VQP46..

Presettable PICVs, PN 25, externally threaded for
- ventilation and air conditioning systems for water side control and automatic hydraulic balancing of air after-treatment devices, such as fan convectors, induction units, and in heat exchangers for heating or cooling.
- heating systems for heating zones such as floor heating systems, apartments, individual rooms, etc.
- closed circuits

Volumetric flow 30...1800 l/h. With or without pressure measuring points P/T.

Data sheet	A6V11877580
Stroke	4 mm
Leakage rate	Class IV, 0...0.01 % of kvs
PN class	PN 25
Medium	Low-temperature hot water Chilled water Water with anti-freeze
Medium temperature	1...90 °C
Ambient temperature, operation	1...50 °C
Valve characteristic	On/Off
Permissible operating pressure	2500 kPa
Material, valve body	Brass CW602N (DZR)
Material, inside set	Dezincification resistant hot-pressed brass (DZR), CW602N, stainless steel, PPS
Mounting position	SUE21P: Horizontally up to 90° and not hanging STA..3..: Any position
Warranty	60 Months

Range overview VQP46..

DN	Con-nect. thread	Vol. flow V [l/h]	Vol. flow Vmin [l/h]	STA..3.. Δp_{max} [kPa]	STA..3.. ΔP_{min} [kPa]	SUE..P Δp_{max} [kPa]	SUE..P ΔP_{min} [kPa]	Stock no.	Product no.
10	G ½"	520	30	600	30	600	30	S55264-V134	**VQP46.10L0.5**
10	G ½"	520	30	600	30	600	30	S55264-V133	**VQP46.10L0.5Q**
15	G ¾"	1300	300	600	28	600	28	S55264-V142	**VQP46.15F1.3**
15	G ¾"	1300	300	600	28	600	28	S55264-V141	**VQP46.15F1.3Q**
15	G ¾"	520	30	600	28	600	28	S55264-V138	**VQP46.15L0.5**
15	G ¾"	520	30	600	28	600	28	S55264-V137	**VQP46.15L0.5Q**
20	G 1"	1500	320	600	35	600	35	S55264-V146	**VQP46.20F1.5**
20	G 1"	1500	320	600	35	600	35	S55264-V145	**VQP46.20F1.5Q**
25	G 1¼"	1800	620	600	31	600	31	S55264-V150	**VQP46.25F1.8**
25	G 1¼"	1800	620	600	31	600	31	S55264-V149	**VQP46.25F1.8Q**

Accessories for VQP46..

Product Title	Data sheet	Stock no.	Product no.
Electronic manometer for Siemens combi valves	CE1N4853	BPZ:ALE10	**ALE10**
Measuring lines and tips for Siemens combi valves	CE1N4853	BPZ:ALE11	**ALE11**
Spare nipples for VPI45.., set of 2, for VPI45..	CE1N4853	BPZ:ALP45	**ALP45**
Black spare valve protection cap (set of 2 pieces)	A6V11877580	S55264-V153	**ALP53**
DPR Replacement-Tool VQI46../VQP46..	A6V11877580	S55264-V154	**ALP54**
Blanking plug for P/T ports	CE1N4853	S55264-V115	**ALP46**
Drain ball valve inclusive O-ring	CE1N4853	S55264-V116	**ALP47**
Combined P/T port and drain ball valve with red ribbon	CE1N4853	S55264-V117	**ALP48**
Long P/T ports (set of 2 pieces)	CE1N4853	S55264-V118	**ALP49**

Combinable actuator for VQP46..

Operating voltage [V]	Positioning signal	Positioning time [s]	Data sheet	Stock no.	Product no.
AC 230	2-position	210	N4884	S55174-A101	**STA23**
AC 24 DC 24	2-position PDM	270	N4884	S55174-A100	**STA73**
AC 24 DC 24	2-position PDM	270	N4884	S55174-A109	**STA73/00**
AC 230	2-position (SPST)	50 Hz:12 60 Hz:10	A6V11780777	S55176-A106	**SUE21P**

On/Off PICV, PN 25, internally threaded

VQI46..

Presettable PICVs, PN 25, internally threaded for
- ventilation and air conditioning systems for water side control and automatic hydraulic balancing of air after-treatment devices, such as fan convectors, induction units, and in heat exchangers for heating or cooling.
- heating systems for heating zones such as floor heating systems, apartments, individual rooms, etc.
- closed circuits

Volumetric flow 30...1800 l/h. With or without pressure measuring points P/T.

Data sheet	A6V11877580
Stroke	4 mm
Leakage rate	Class IV, 0...0.01 % of kvs
PN class	PN 25
Medium	Low-temperature hot water Chilled water Water with anti-freeze
Medium temperature	1...90 °C
Ambient temperature, operation	1...50 °C
Valve characteristic	On/Off
Permissible operating pressure	2500 kPa
Material, valve body	Brass CW602N (DZR)
Material, inside set	Dezincification resistant hot-pressed brass (DZR), CW602N, stainless steel, PPS
Mounting position	SUE21P: Horizontally up to 90° and not hanging STA..3..: Any position
Warranty	60 Months

Range overview VQI46..

DN	Con-nect. thread	Vol. flow V [l/h]	Vol. flow Vmin [l/h]	STA..3.. Δp_{max} [kPa]	STA..3.. ΔP_{min} [kPa]	SUE..P Δp_{max} [kPa]	SUE..P ΔP_{min} [kPa]	Stock no.	Product no.
15	Rp ½"	520	30	600	28	600	28	S55264-V136	**VQI46.15L0.5**
15	Rp ½"	520	30	600	28	600	28	S55264-V135	**VQI46.15L0.5Q**
15	Rp ½"	1300	300	600	28	600	28	S55264-V140	**VQI46.15F1.3**
15	Rp ½"	1300	300	600	28	600	28	S55264-V139	**VQI46.15F1.3Q**
20	Rp ¾"	1500	320	600	35	600	35	S55264-V144	**VQI46.20F1.5**
20	Rp ¾"	1500	320	600	35	600	35	S55264-V143	**VQI46.20F1.5Q**
25	G 1¼"	1800	620	600	31	600	31	S55264-V148	**VQI46.25F1.8**
25	Rp 1"	1800	620	600	31	600	31	S55264-V147	**VQI46.25F1.8Q**

Accessories for VQI46..

Product Title	Data sheet	Stock no.	Product no.
Electronic manometer for Siemens combi valves	CE1N4853	BPZ:ALE10	**ALE10**
Measuring lines and tips for Siemens combi valves	CE1N4853	BPZ:ALE11	**ALE11**
Spare nipples for VPI45.., set of 2, for VPI45..	CE1N4853	BPZ:ALP45	**ALP45**
Black spare valve protection cap (set of 2 pieces)	A6V11877580	S55264-V153	**ALP53**
DPR Replacement-Tool VQI46../VQP46..	A6V11877580	S55264-V154	**ALP54**
Blanking plug for P/T ports	CE1N4853	S55264-V115	**ALP46**
Drain ball valve inclusive O-ring	CE1N4853	S55264-V116	**ALP47**
Combined P/T port and drain ball valve with red ribbon	CE1N4853	S55264-V117	**ALP48**
Long P/T ports (set of 2 pieces)	CE1N4853	S55264-V118	**ALP49**

Combinable actuator for VQI46..

Operating voltage [V]	Positioning signal	Positioning time [s]	Data sheet	Stock no.	Product no.
AC 230	2-position	210	N4884	S55174-A101	**STA23**
AC 24 DC 24	2-position PDM	270	N4884	S55174-A100	**STA73**
AC 24 DC 24	2-position PDM	270	N4884	S55174-A109	**STA73/00**
AC 230	2-position (SPST)	50 Hz:12 60 Hz:10	A6V11780777	S55176-A106	**SUE21P**

Rotary actuators 2 Nm with spring return for ball valves

GQD..9A

Electromotoric actuators for 3-position and modulating control, with spring-return, pre-wired with 0.9 m long connection cables, for the operation of Siemens 2-port and 3-port valves, types VAI61../VBI61.., VAG61../VBG61.., VAI60../VBI60.. and VAG60../VBG60.. .

Data sheet	N4659
Torque	2 Nm
Positioning time	Opening with motor: 30 s Closing with spring: 15 s
Degree of protection	IP40
Dimensions (W x H x D)	75 x 113 x 136 mm
Mounting position	Upright to horizontal
Position feedback	DC 0...10 V (GQD161.9A)
Warranty	60 Months

Range overview GQD..9A

Operating voltage [V]	Positioning signal	Power consumption	Auxiliary switch	Spring return function	Cable length [m]	Stock no.	Product no.
AC 24 DC 24	2-position	6.5 VA 4.5 W	0	Yes	0.9	BPZ:GQD121.9A	**GQD121.9A**
AC 24 DC 24	3-position	4 VA 2.5 W	0	Yes	0.9	BPZ:GQD131.9A	**GQD131.9A**
AC 24 DC 24	DC 0...10 V	4.5 VA 3 W	0	Yes	0.9	BPZ:GQD161.9A	**GQD161.9A**
AC 230 DC 24	2-position	10 VA 4.5 W	0	Yes	0.9	BPZ:GQD321.9A	**GQD321.9A**

GSD..9A

Electromotoric rotary actuators without spring return for ball valves, 2 Nm, 30s

Electromotoric rotary actuators without spring return, for On-Off (2 wire SPDT) and modulating control, pre-wired with 0.9 m long connection cable, for the operation of Siemens 2-port and 3-port valves, types VAG61.., VAI61.., VBG61.. and VBI61.. .

Data sheet	A6V10636056
Torque	2 Nm
Positioning time	30 s
Degree of protection	IP40
Dimensions (W x H x D)	75 x 113 x 136 mm
Mounting position	Upright to horizontal
Warranty	60 Months

Range overview GSD..9A

Operating voltage [V]	Positioning signal	Power consumption	Auxiliary switch	Spring return function	Cable length [m]	Stock no.	Product no.
AC/DC 24	On-Off (2 wire SPDT)	2 VA 1.5 W	0	No	0.9	BPZ:GSD141.9A	**GSD141.9A**
AC/DC 24	DC 0/2..10 V	2.4 VA 1.4 W	0	No	0.9	S55499-D232	**GSD161.9A**
AC 230	On-Off (2 wire SPDT)	12 VA 2 W	0	No	0.9	BPZ:GSD341.9A	**GSD341.9A**

Electromotoric rotary actuators 5 Nm without spring return for ball valves

GDB..9E

Electromotoric actuators for 2-position/3-position and modulating control, without spring return, pre-wired with 0.9 m long connection cables, for the operation of Siemens 6-port control ball valve VWG41.. and Siemens 2-port and 3-port valves, types VAG61.., VAI61.., VBG61.. and VBI61.. .

Data sheet	A6V10636150 / A6V10725318 / N4657
Torque	5 Nm
Positioning time	150 s
Degree of protection	IP54
Dimensions (W x H x D)	88 x 112 x 143 mm
Mounting position	Upright to horizontal
Warranty	60 Months

Range overview GDB..9E

For customers in Asia / Australia please choose S55499-D383; S55499-D384; D55499-D397

Operating voltage [V]	Positioning signal	Power consumption	Auxiliary switch	Spring return function	Cable length [m]	Stock no.	Product no.
AC 24 DC 24...48	DC 0/2...10 V	2.1 VA 1.2 W	0	No	0.9	S55499-D801	**GDB161.9E/6P**
AC 24 DC 24...48	DC 0/2...10 V	2.1 VA 1.2 W	0	No	0.9	S55499-D784	**GDB161.9E/6W**
AC/DC 24	Modbus RTU	3 VA 2.5 W	0	No	0.9	S55499-D802	**GDB161.9E/MO6P**
AC 24 DC 24...48	DC 0/2...10 V	2.1 VA 1.2 W	0	No	3	S55499-D827	**GDB161.9G/6P**
AC 24 DC 24...48	DC 0/2...10 V	2.1 VA 1.2 W	0	No	3	S55499-D829	**GDB161.9G/6W**
AC 24 DC 24...48	DC 0/2...10 V	2.1 VA 1.2 W	0	No	5	S55499-D828	**GDB161.9H/6P**
AC 24 DC 24...48	DC 0/2...10 V	2.1 VA 1.2 W	0	No	5	S55499-D830	**GDB161.9H/6W**
AC/DC 24	2-position/3-position	2 VA 1 W	0	No	0.9	S55499-D383	**GDB141.9E**
AC/DC 24	DC 0/2...10 V	3 VA 1.5 W	0	No	0.9	S55499-D397	**GDB161.9E**
AC 230	2-position/3-position	5 VA 1.6 W	0	No	0.9	S55499-D384	**GDB341.9E**
AC/DC 24	2-position/3-position	2 VA 1 W	0	No	0.9	S55499-D200	**GDB141.9E**
AC/DC 24	DC 0/2...10 V	3 VA 1.5 W	0	No	0.9	S55499-D275	**GDB161.9E**
AC 230	2-position/3-position	5 VA 1.6 W	0	No	0.9	S55499-D201	**GDB341.9E**
AC 24	KNX S-Mode or KNX PL-Link	3 VA 2.5 W	0	No	0.9	S55499-D203	**GDB111.9E/KN**
AC/DC 24	Modbus RTU	3 VA 2.5 W	0	No	0.9	S55499-D682	**GDB161.9E/MO**

GDB111.9E/MO

Electromotoric actuators for modulating control, without spring return, for the operation of Siemens 6-port control ball valve VWG41.. and Siemens 2-port and 3-port ball valves, types VAG61.., VAI61.., VBG61.. and VBI61.. .

Data sheet	A6V10881143
Angular rotation	90°
Power consumption	3 VA 2.5 W
Positioning time	150 s
Communication	Modbus
Positioning signal	Modbus RTU
Medium temperature	5...90 °C
Ambient humidity, operation	95 % r.h.
Dimensions (W x H x D)	88 x 112 x 143 mm
Operating voltage	AC 24 V
Auxiliary switch	0
Warranty	60 Months

Stock no.	Product no.
S55499-D202	**GDB111.9E/MO**

GDD..9E

Electromotoric rotary actuators 5 Nm without spring return for ball valves

Electromotoric actuators for modulating control, without spring return, pre-wired with 0.9 m long connection cables, for the operation of Siemens 2-port and 3-port valves, types VAG61.., VAI61.., VBG61.. and VBI61.. .

Data sheet	A6V12725064
Torque	5 Nm
Positioning time	30 s
Degree of protection	IP54
Dimensions (W x H x D)	88 x 112 x 143 mm
Mounting position	Upright to horizontal

Range overview GDD..9E

Operating voltage [V]	Positioning signal [V]	Power consumption	Spring return function	Cable length [m]	Stock no.	Product no.
AC 24 DC 24	DC 0/2...10	4.9 VA 1.8 W	No	0.9	S55499-D736	**GDD161.9E**

8

Rotary actuators 7 Nm with spring return for ball valves

GMA..9E

Electromotoric actuators for 2-position, 3-position and modulating control, with spring-return, pre-wired with 0.9 m long connection cables, for the operation of Siemens 2-port and 3-port valves, types VAG60../VBG60.., VAI60../VBI60.., VAG61../VBG61.. and VAI61../VBI61.. .

Data sheet	N4658
Torque	7 Nm
Positioning time	Opening with motor: 90 s Closing with spring: 15 s
Degree of protection	IP54
Dimensions (W x H x D)	93 x 112 x 184 mm
Mounting position	Upright to horizontal
Warranty	60 Months

Range overview GMA..9E

Operating voltage [V]	Positioning signal	Power consumption	Auxiliary switch	Spring return function	Cable length [m]	Stock no.	Product no.
AC 24 DC 24	2-position	5 VA 3.5 W	0	Yes	0.9	BPZ:GMA121.9E	**GMA121.9E**
AC 24 DC 24	2-position	5 VA 3.5 W	0	Yes	5	S55499-D680	**GMA121.9H**
AC 24 DC 24	3-position	5 VA 3.5 W	0	Yes	0.9	BPZ:GMA131.9E	**GMA131.9E**
AC 24 DC 24	DC 0...10 V	5 VA 3.5 W	0	Yes	0.9	BPZ:GMA161.9E	**GMA161.9E**
AC 24 DC 24	DC 0...10 V	5 VA 3.5 W	0	Yes	5	S55499-D679	**GMA161.9H**
AC 24 DC 24	Modbus RTU	5 VA 3.5 W	0	Yes	0.9	S55499-D683	**GMA161.9E/MO**
AC 230 DC 24	2-position	7 VA 4.5 W	0	Yes	0.9	BPZ:GMA321.9E	**GMA321.9E**

Rotary actuators for ball valves

GLD..9E

- For 2-port and 3-port control ball valves, internally threaded connections or externally threaded connections
- Connection cable 0.9 m

Data sheet	A6V11171770
Torque	8 Nm
Positioning time	30 s
Degree of protection	IP54
Dimensions (W x H x D)	101 x 86 x 49 mm
Warranty	60 Months

Range overview GLD..9E

Operating voltage [V]	Positioning signal	Power consumption	Spring return function	Cable length [m]	Stock no.	Product no.
AC 24 DC 24	DC 0/2...10 V	4.9 VA 1.8 W	No	0.9	S55499-D278	**GLD161.9E**
AC 24 DC 24	Modbus RTU	4.9 VA 1.8 W	No	0.9	S55499-D695	**GLD161.9E/MO**

GLB..9E

Electromotoric rotary actuators 10 Nm without spring return for ball valves

Electromotoric actuators for 2-position/3-position and modulating control, without spring return, pre-wired with 0.9 m long connection cables, for the operation of Siemens 2-port and 3-port valves, types VAG60../VBG60.., VAI60../VBI60.., VAG61../VBG61.., VAI61../VBI61.. and VWG41.. .

Torque	10 Nm
Positioning time	150 s
Degree of protection	IP54
Dimensions (W x H x D)	88 x 112 x 143 mm
Mounting position	Upright to horizontal
Position feedback	DC 0...10 V (GLB161.9E)
Warranty	60 Months

Range overview GLB..9E

For customers in Asia / Australia please choose S55499-D391; S55499-D392; D55499-D402

Operating voltage [V]	Positioning signal	Power consumption	Auxiliary switch	Spring return function	Cable length [m]	Stock no.	Product no.
AC/DC 24		2.5 VA 1.5 W	0	No	0.9	S55499-D831-A559	**GLB161.9E/FX**
AC/DC 24	2-position/3-position	3 VA 1.3 W	0	No	0.9	S55499-D391	**GLB141.9E**
AC/DC 24	DC 0/2...10 V	2.5 VA 1.5 W	0	No	0.9	S55499-D402	**GLB161.9E**
AC 230	2-position/3-position	5.8 VA 1.9 W	0	No	0.9	S55499-D392	**GLB341.9E**
AC/DC 24	2-position/3-position	3 VA 1.3 W	0	No	0.9	S55499-D204	**GLB141.9E**
AC/DC 24	DC 0/2...10 V	2.5 VA 1.5 W	0	No	0.9	S55499-D277	**GLB161.9E**
AC 230	2-position/3-position	5.8 VA 1.9 W	0	No	0.9	S55499-D205	**GLB341.9E**
AC 19.2...28.8 24	KNX S-Mode or KNX PL-Link	3 VA 2.5 W	0	No	0.9	S55499-D207	**GLB111.9E/KN**
AC 24	Modbus RTU	3 VA 2.5 W	0	No	0.9	S55499-D206	**GLB111.9E/MO**
AC/DC 24	Modbus RTU	2.5 VA 1.5 W	0	No	0.9	S55499-D681	**GLB161.9E/MO**

Rotary air damper actuators 35 Nm, without spring return

GIB..1E

- With self-centering shaft adapter for shaft dia. 8..25.6 mm, square 6...18 mm, min. shaft length 20 mm
- With position indication and adjustable mechanical limit stop
- Button for disengaging the gear train to enable manual override
- With housing made of die-cast aluminium and 0.9 m connecting cable

Data sheet	N4626 / A6V101037253
Torque	35 Nm
Air damper area	6 m²
Positioning time	150 s
Degree of protection	IP54
Dimensions (W x H x D)	100 x 300 x 75 mm
Warranty	60 Months

Range overview GIB..1E

Rotary actuators 35 Nm for ball valves VAF41..

Operating voltage [V]	Positioning signal	Power consumption	Auxiliary switch	Spring return function	Cable length [m]	Stock no.	Product no.
AC 24	3-position	7 VA 7 W	0	No	0.9	BPZ:GIB131.1E	**GIB131.1E**
AC 24	3-position	7 VA 7 W	2	No	0.9	BPZ:GIB135.1E	**GIB135.1E**
AC 24	3-position	7 VA 7 W	2	No	0.9	BPZ:GIB136.1E	**GIB136.1E**
AC 24	DC 0...10 V	8 VA 8 W	0	No	0.9	BPZ:GIB161.1E	**GIB161.1E**
AC 24	Modbus RTU	8 VA 8 W	0	No	0.9	S55499-D299	**GIB161.1E/MO**
AC 24	DC 0...35 V Adjustable	8 VA 8 W	0	No	0.9	BPZ:GIB163.1E	**GIB163.1E**
AC 24	DC 0...35 V Adjustable	8 VA 8 W	2	No	0.9	BPZ:GIB164.1E	**GIB164.1E**
AC 24	DC 0...10 V	8 VA 8 W	2	No	0.9	BPZ:GIB166.1E	**GIB166.1E**
AC 230	3-position	5 VA 5 W	0	No	0.9	BPZ:GIB331.1E	**GIB331.1E**
AC 230	3-position	5 VA 5 W	2	No	0.9	BPZ:GIB335.1E	**GIB335.1E**
AC 230	3-position	5 VA 5 W	2	No	0.9	BPZ:GIB336.1E	**GIB336.1E**

Types GIB135.1E and 335.1E have a feedback potentiometer.
Basic Documentation No.: Z4626

Accessories for GIB..1E

Product Title	Data sheet	Stock no.	Product no.
Standard Shaft Adapter, GM	N4699	S55859-Z117	**ASK71.06**
Shaft adapter, GM, square, 12mm	N4699	S55859-Z109	**ASK74.18**
Shaft adapter, GM, square, 10mm	N4699	S55859-Z110	**ASK74.19**
Shaft adapter, GM, square, 8mm	N4699	S55859-Z111	**ASK74.20**
Accessory Kit, GIB/GBB/GCA	N4699	S55859-Z102	**ASK71.02**
Mounting Bracket, GM	N4699	S55859-Z114	**ASK71.03**

SAL..

Electromotoric actuators 10...40 Nm for slipper and butterfly valves

Rotary actuator for the operation of 3-port slipper valves VBF21.. and butterfly valves VKF41.., VKF46.., VFW41.., VFW41..U and VFL41.. as control and safety shut-off valves in heating, ventilation and air conditioning systems.
With manual adjuster and position indicator, status indication per LED.
Optional functions with auxiliary switches, potentiometer, functional module and stem heater.

SA..81.., SA..61.. are UL listed.

Data sheet	N4502
Degree of protection	IP54
Medium temperature	-10...120 °C
Mounting position	Upright to horizontal
Position feedback	DC 0...10 V (SA..6..)
Warranty	60 Months

Range overview SAL..

Operating voltage [V]	Positioning signal	Power consumption [VA]	Auxiliary switch	Positioning time [s]	Spring return function	Torque [Nm]	Stock no.	Product no.
AC 230	3-position	3.5	0	120		10	S55162-A108	**SAL31.00T10**
AC 230	3-position	3.5	0	120		10	S55162-A134-A901	**SAL31.00T10F05/VI**
AC 230	3-position	5.5	0	30		10	S55162-A109	**SAL31.03T10**
AC 230	3-position	5.5	0	30	No	10	S55162-A121	**SAL31.03T10/F05**
AC 230	3-position	4.5	0	120		20	S55162-A110	**SAL31.00T20**
AC 230	3-position	7	0	120		40	S55162-A111	**SAL31.00T40**
AC/DC 24	DC 0...10 V DC 4...20 mA 0...1000 Ohm	5	0	120		10	S55162-A100	**SAL61.00T10**
AC/DC 24	DC 0...10 V DC 4...20 mA 0...1000 Ohm	7.5	0	30		10	S55162-A101	**SAL61.03T10**
AC/DC 24	DC 0...10 V DC 4...20 mA 0...1000 Ohm	7.5	0	30	No	10	S55162-A123	**SAL61.03T10/F05**
AC/DC 24	DC 0...10 V DC 4...20 mA 0...1000 Ohm	6	0	120		20	S55162-A102	**SAL61.00T20**
AC/DC 24	DC 0...10 V DC 4...20 mA 0...1000 Ohm	9	0	120		40	S55162-A103	**SAL61.00T40**
AC/DC 24	3-position	3	0	120		10	S55162-A104	**SAL81.00T10**
AC/DC 24	3-position	5	0	30		10	S55162-A105	**SAL81.03T10**

Range overview SAL..

Operating voltage [V]	Positioning signal	Power consumption [VA]	Auxiliary switch	Positioning time [s]	Spring return function	Torque [Nm]	Stock no.	Product no.
AC/DC 24	3-position	5	0	30	No	10	S55162-A122	**SAL81.03T10/F05**
AC/DC 24	3-position	4	0	120		20	S55162-A106	**SAL81.00T20**
AC/DC 24	3-position	6	0	120		40	S55162-A107	**SAL81.00T40**

Accessories for SAL..

Product Title	Data sheet	Stock no.	Product no.
SparePart-Kit SAL...	N4502	BPZ:8000060844	**8000060844**
Auxiliary switch for SA..31../SA..61../SA..81..	N4501	S55845-Z103	**ASC10.51**
Potentiometer 0...1000 Ohm for SA..31../SA..81..	N4501	S55845-Z106	**ASZ7.5/1000**
Funtion module for SA..61.., sequence control/changeover of acting direction	N4501	S55845-Z107	**AZX61.1**
Weathershield for SAX../SAL..	N4501	S55845-Z109	**ASK39.1**

Mounting sets for SAL..

Product Title	Data sheet	Stock no.	Product no.
Mounting set for SAL..T10 onto VBF21.., DN65..150 with ASK31N	N4502	S55845-Z100	**ASK31N**
Mounting set for SAL..T10 onto VBF21.., DN40..50 with ASK32N	N4502	S55845-Z211	**ASK32N**
Mounting set for SAL.. onto VKF41.., without VKF41..U types	N4502	S55845-Z101	**ASK33N**
Mounting set for SAL.. onto VKF45..	N4502	S55845-Z102	**ASK35N**

SQL36..

Electromotoric actuators 40...1200 Nm for butterfly valves

With reversible asynchronous motor. Direct-acting manual control. Die-cast aluminium housing and plastic manual knob. For VKF46 butterfly valves from DN40 mm, no mounting kits required.

The actuators have built-in end switches. 1 double auxiliary switch, 1 potentiometer and 1 positioning time module (without SQL36E50..) can be retrofitted.

Data sheet	N4505
Degree of protection	IP67
Medium temperature	≤120 °C
Mounting position	Any
Warranty	60 Months

Range overview SQL36..

Operating voltage [V]	Positioning signal	Power consumption [VA]	Positioning time [s]	Torque [Nm]	Stock no.	Product no.
AC 230	3-position	235	12	400	BPZ:SQL36E110	**SQL36E110**
AC 230	3-position	25	25	40	BPZ:SQL36E50F04	**SQL36E50F04**
AC 230	3-position	25	25	40	BPZ:SQL36E50F05	**SQL36E50F05**
AC 230	3-position	166	6	100	BPZ:SQL36E65	**SQL36E65**
AC 230	3-position	235	24	1200	BPZ:SQL36E160	**SQL36E160**

Running time with auxiliary module SEZ31.1: variable positioning time 30...180 s (SQL36E65), 60...360 s (SQL36E110) resp. 120...720 s (SQL36E160).

Accessories for SQL36E..

Product Title	Data sheet	Stock no.	Product no.
Double auxiliary switch for SQL36E	N4505	BPZ:ASC36	**ASC36**
Potentiometer 1000 Ohm for SQL36E..	N4505	BPZ:ASZ36	**ASZ36**

SQL..E..

Electromotoric actuator, 90°, AC 230 V

Electromotoric actuator for operation of VFW41.., VFL41.. butterfly valves as shutoff and control valves in heating, ventilation and air conditioning systems, no mounting kits required.

8

Range overview SQL..E..

Operating voltage [V]	Power consumption	Auxiliary switch	Spring return function	Stock no.	Product no.
AC 230	91 VA	2	No	S55162-A126	**SQL341E100**
AC 230	390 VA	2	No	S55162-A128	**SQL341E1200**
AC 230	45 VA	2	No	S55162-A124	**SQL341E25**
AC 230	45 VA	2	No	S55162-A125	**SQL341E40**
AC 230	194 VA	2	No	S55162-A127	**SQL341E400**
AC 230	91 VA	2	No	S55162-A131	**SQL361E100**
AC 230	390 VA	2	No	S55162-A133	**SQL361E1200**
AC 230	45 VA	2	No	S55162-A129	**SQL361E25**
AC 230	45 VA	2	No	S55162-A130	**SQL361E40**
AC 230	194 VA	2	No	S55162-A132	**SQL361E400**

New Product

Electromotoric actuators 25...2650 Nm for butterfly valves VKF42..

SQL..B..

Electromotoric actuator for operation of VKF42.. butterfly valves as shutoff and control valves in heating, ventilation and air conditioning plants. No mounting kits required.
Flange connection to EN ISO 5211.

The actuators have built-in end switches. 1 double auxiliary switch.

Data sheet	N4520
Degree of protection	IP67
Medium temperature	-10...80 °C
Mounting position	Upright to horizontal
Position feedback	DC 0...10 V (SQL361..)
Warranty	60 Months

Range overview SQL..B..

For customers in Asia / Australia

Operating voltage [V]	Positioning signal	Power consumption [VA]	Spring return function	Stock no.	Product no.
AC 220	2-position (SPDT)	45	No	S55164-A100	**SQL321B25**
AC 220			No	S55164-A125	**SQL321B6000**
AC 220			No	S55164-A127	**SQL351B6000**
AC 220			No	S55164-A126	**SQL361B6000**
AC 220	2-position (SPDT)	45	No	S55164-A101	**SQL321B50**
AC 220	DC 0...10 V	45	No	S55164-A102	**SQL361B50**
AC 220	2-position (SPDT)	91	No	S55164-A103	**SQL321B150**
AC 220	DC 0...10 V	91	No	S55164-A104	**SQL361B150**
AC 220	2-position (SPDT)	165	No	S55164-A105	**SQL321B270**
AC 220	DC 0...10 V	165	No	S55164-A106	**SQL361B270**
AC 220	2-position (SPDT)	194	No	S55164-A107	**SQL321B570**
AC 220	DC 0...10 V	194	No	S55164-A108	**SQL361B570**
AC 220	2-position (SPDT)	390	No	S55164-A109	**SQL321B1400**
AC 220	DC 0...10 V	390	No	S55164-A110	**SQL361B1400**
AC 220	2-position (SPDT)	436	No	S55164-A111	**SQL321B2650**
AC 220	DC 0...10 V	436	No	S55164-A112	**SQL361B2650**

Accessories for SQL..B..

Product Title	Data sheet	Stock no.	Product no.
Double auxiliary switch	N4520	S55845-Z122	**ASC10.21**

Electromotoric actuators 20...50 Nm for ball valves VAF41.. SQL..A..

Electromotoric actuator for operation of VAF41.. ball valves as shutoff and control valves in heating, ventilation and air conditioning plants. No mounting kits required.

Data sheet	A6V13769562
Positioning time	30 s
Ambient humidity, operation	95 % r.h.
Mounting position	Upright to horizontal

Range overview SQL..A..

Operating voltage [V]	Positioning signal	Power consumption	Spring return function	Stock no.	Product no.
AC 24 DC 24	2P SPDT/3P	AC 24 V: 30 VA DC 24 V: 12 VA	No	S55164-A163	SQL131A00T20
AC 24 DC 24	2P SPDT/3P	AC 24 V: 40 VA DC 24 V: 20 VA	No	S55164-A164	SQL131A00T35
AC 24 DC 24	2P SPDT/3P	AC 24 V: 40 VA DC 24 V: 20 VA	No	S55164-A165	SQL131A00T50
AC 24 DC 24	Modulating	AC 24 V: 30 VA DC 24 V: 12 VA	No	S55164-A166	SQL161A00T20
AC 24 DC 24	Modulating	AC 24 V: 40 VA DC 24 V: 20 VA	No	S55164-A167	SQL161A00T35
AC 24 DC 24	Modulating	AC 24 V: 40 VA DC 24 V: 20 VA	No	S55164-A168	SQL161A00T50
AC 230	2P SPDT/3P	40 VA	No	S55164-A160	SQL331A00T20
AC 230	2P SPDT/3P	50 VA	No	S55164-A161	SQL331A00T35
AC 230	2P SPDT/3P	50 VA	No	S55164-A162	SQL331A00T50

2-port contol ball valves for flanged connection

VAF41..

Ball valves for use in heating, cooling, ventilating and air conditioning systems as a control or shutoff valve.

Do not operate GBB331.1E, GBB131.1E, GIB331.1E and GIB131.1E actuators with 2-position control signal. It will damage these rotary actuators.

Data sheet	A6V11168935
Leakage rate	0...0.01 % of k_{vs} value
Medium	Water Water with anti-freeze
Medium temperature	2...80 °C
Ambient temperature, operation	-15...55 °C
Rangeability	≥ 200
Permissible operating pressure	1600 kPa
Material, inside set	Stainless steel (SS304)
PN class	PN 16
Warranty	60 Months

Range overview VAF41..

For customers in Asia / Australia

GIB..1E Δp_{max} [kPa]	GIB..1E Δp_s [kPa]	2 x GIB..1E Δp_{max} [kPa]	2 x GIB..1E Δp_s [kPa]	GEB..1E Δp_{max} [kPa]	GEB..1E Δp_s [kPa]	GCA.. Δp_{max} [kPa]	GCA.. Δp_s [kPa]	DN	k_{vs} [m³/h]	Stock no.	Product no.
400	400							100	160	S55232-V114	VAF41.100-160/2
400	400							125	250	S55232-V115	VAF41.125-250/2
		400	400					150	360	S55232-V116	VAF41.150-360/2
				400	400	400	400	65	63	S55232-V110	**VAF41.65-63/1**
				400	400	400	400	65	63	S55232-V112	VAF41.65-63/2
						400	400	80	100	S55232-V111	**VAF41.80-100/1**
						400	400	80	100	S55232-V113	VAF41.80-100/2
400	400							100	160	S55232-V107	**VAF41.100-160**
400	400							125	250	S55232-V108	**VAF41.125-250**
		400	400					150	360	S55232-V109	**VAF41.150-360**

Accessories for VAF41..

Product Title	Data sheet	Stock no.	Product no.
Ball valve mounting set, DN 65, DN 80, DN 100, DN 125	A6V11168935	S55845-Z203	**ASK77.21**
Ball valve mounting set, DN65, DN80	A6V11168935	S55845-Z252	**ASK77.23**
Ball valve mounting set, DN 150	A6V11168935	S55845-Z204	**ASK77.22**

Combinable actuator for VAF41..

Operating voltage [V]	Positioning signal	Positioning time [s]	Spring return function	Data sheet	Stock no.	Product no.
AC 24 DC 24...48	2-position/3-position	150	No	A6V11449860	S55499-D329	**GEB141.1E**
AC 24 DC 24...48	DC 0/2...10 V	150	No	A6V11449860	S55499-D332	**GEB161.1E**
AC 100...240	2-position/3-position	150	No	A6V11449860	S55499-D336	**GEB341.1E**

Combinable actuator for VAF41..

Operating voltage [V]	Positioning signal	Positioning time [s]	Spring return function	Data sheet	Stock no.	Product no.
AC 24	3-position	150	No	N4626	BPZ:GIB131.1E	**GIB131.1E**
AC 24	DC 0...10 V	150	No	N4626	BPZ:GIB161.1E	**GIB161.1E**
AC 230	3-position	150	No	N4626	BPZ:GIB331.1E	**GIB331.1E**

2-port control ball valves, internally threaded, PN40

VAI61..

Internally threaded connections Rp.. as per ISO 7-1.
For use in heating, ventilating and air conditioning plants as a control valve.
For closed circuits.

Data sheet	N4211
Leakage rate	„Waterproof" as per EN 60534-4 L/1, better than class 5
Medium	Water Water with anti-freeze
Medium temperature	-10...120 °C
Valve characteristic	Equal-percentage
Rangeability	> 500
Permissible operating pressure	1600 kPa
Material, valve body	Brass CW602N (DZR)
Material, inside set	Brass UNS C35330 (DZR), chromium-plated
PN class	PN 40
Warranty	60 Months

Range overview VAI61..

Con-nect. thread	GQD../ GSD..9A Δp_{max} [kPa]	GQD../ GSD..9A Δp_s [kPa]	GDB..9E Δp_{max} [kPa]	GDB..9E Δp_s [kPa]	GMA../ GLB..9E Δp_{max} [kPa]	GMA../G LB..9E Δp_s [kPa]	GLD..9E Δp_{max} [kPa]	GLD..9E Δp_s [kPa]	DN	k_{vs} [m³/h]	Stock no.	Product no.
Rp ½"	350	1400	350	1400	350	1400	350	1400	15	0.25	S55230-V220	**VAI61.15-0.25**
Rp ½"	350	1400	350	1400	350	1400	350	1400	15	0.4	S55230-V221	**VAI61.15-0.4**
Rp ½"	350	1400	350	1400	350	1400	350	1400	15	0.63	S55230-V222	**VAI61.15-0.63**
Rp ½"	350	1400	350	1400	350	1400	350	1400	15	1	BPZ:VAI61.15-1	**VAI61.15-1**
Rp ½"	350	1400	350	1400	350	1400	350	1400	15	1.6	BPZ:VAI61.15-1.6	**VAI61.15-1.6**
Rp ½"	350	1400	350	1400	350	1400	350	1400	15	2.5	BPZ:VAI61.15-2.5	**VAI61.15-2.5**
Rp ½"	350	1400	350	1400	350	1400	350	1400	15	4	BPZ:VAI61.15-4	**VAI61.15-4**
Rp ½"	350	1400	350	1400	350	1400	350	1400	15	6.3	BPZ:VAI61.15-6.3	**VAI61.15-6.3**
Rp ½"	350	1400	350	1400	350	1400	350	1400	15	10	BPZ:VAI61.15-10	**VAI61.15-10**
Rp ¾"	350	1400	350	1400	350	1400	350	1400	20	4	BPZ:VAI61.20-4	**VAI61.20-4**
Rp ¾"	350	1400	350	1400	350	1400	350	1400	20	6.3	BPZ:VAI61.20-6.3	**VAI61.20-6.3**
Rp ¾"	350	1400	350	1400	350	1400	350	1400	20	10	BPZ:VAI61.20-10	**VAI61.20-10**
Rp 1"	350	1400	350	1400	350	1400	350	1400	25	6.3	BPZ:VAI61.25-6.3	**VAI61.25-6.3**
Rp 1"	350	1400	350	1400	350	1400	350	1400	25	10	BPZ:VAI61.25-10	**VAI61.25-10**
Rp 1"	350	1400	350	1400	350	1400	350	1400	25	16	BPZ:VAI61.25-16	**VAI61.25-16**
Rp 1¼"					350	1000	350	1000	32	10	BPZ:VAI61.32-10	**VAI61.32-10**
Rp 1¼"					350	1000	350	1000	32	16	BPZ:VAI61.32-16	**VAI61.32-16**
Rp 1¼"					350	1000	350	1000	32	25	BPZ:VAI61.32-25	**VAI61.32-25**
Rp 1½"					350	800	350	800	40	16	BPZ:VAI61.40-16	**VAI61.40-16**
Rp 1½"					350	800	350	800	40	25	BPZ:VAI61.40-25	**VAI61.40-25**
Rp 1½"					350	800	350	800	40	40	BPZ:VAI61.40-40	**VAI61.40-40**
Rp 2"					350	600	350	600	50	25	BPZ:VAI61.50-25	**VAI61.50-25**
Rp 2"					350	600	350	600	50	40	BPZ:VAI61.50-40	**VAI61.50-40**
Rp 2"					350	600	350	600	50	63	BPZ:VAI61.50-63	**VAI61.50-63**

Accessories for VAI61..

Product Title	Data sheet	Stock no.	Product no.
Temperature Adapter		S55846-Z115	**ALJ100**
Mounting kit for rotary actuators GMA..1E with spring-return		BPZ:ASK77.2	**ASK77.2**
Mounting kit for rotary actuators GDB..1E, GLB..1E, GDD..1E and GLD..1E without spring-return		BPZ:ASK77.3	**ASK77.3**
Mounting kits for rotary actuators with or without spring-return, for special types with switches or potentiometer		S55845-Z199	**ASK77.5**

Combinable actuator for VAI61..

Operating voltage [V]	Positioning signal	Positioning time [s]	Spring return function	Data sheet	Stock no.	Product no.
AC 24 DC 24	DC 0/2...10 V	30	No	A6V12725064	S55499-D736	**GDD161.9E**
AC/DC 24	DC 0/2..10 V	30	No	A6V10636056	S55499-D232	**GSD161.9A**
AC/DC 24	2-position/3-position	150	No	A6V10636150_enAP	S55499-D383	**GDB141.9E**
AC/DC 24	DC 0/2...10 V	150	No	A6V10636150_enAP	S55499-D397	**GDB161.9E**
AC 230	2-position/3-position	150	No	A6V10636150_enAP	S55499-D384	**GDB341.9E**
AC/DC 24	2-position/3-position	150	No	A6V10636150	S55499-D200	**GDB141.9E**
AC/DC 24	DC 0/2...10 V	150	No	A6V10636150	S55499-D275	**GDB161.9E**
AC 230	2-position/3-position	150	No	A6V10636150	S55499-D201	**GDB341.9E**
AC/DC 24	Modbus RTU	150	No	A6V10636150	S55499-D682	**GDB161.9E/MO**
AC 24 DC 24	DC 0/2...10 V	30	No	A6V11171770	S55499-D278	**GLD161.9E**
AC 24 DC 24	Modbus RTU	30	No	A6V11171770	S55499-D695	**GLD161.9E/MO**
AC/DC 24	2-position/3-position	150	No	A6V10636203_enAP	S55499-D391	**GLB141.9E**
AC/DC 24	DC 0/2...10 V	150	No	A6V10636203_enAP	S55499-D402	**GLB161.9E**
AC 230	2-position/3-position	150	No	A6V10636203_enAP	S55499-D392	**GLB341.9E**
AC/DC 24	2-position/3-position	150	No	A6V10636203	S55499-D204	**GLB141.9E**
AC/DC 24	DC 0/2...10 V	150	No	A6V10636203	S55499-D277	**GLB161.9E**
AC 230	2-position/3-position	150	No	A6V10636203	S55499-D205	**GLB341.9E**
AC/DC 24	Modbus RTU	150	No	A6V10636203	S55499-D681	**GLB161.9E/MO**
AC 24 DC 24	3-position	Open:30 Close:15	Yes	N4659	BPZ:GQD131.9A	**GQD131.9A**
AC 24 DC 24	DC 0...10 V	Open:30 Close:15	Yes	N4659	BPZ:GQD161.9A	**GQD161.9A**
AC 24 DC 24	3-position	Open:90 Close:15	Yes	N4658	BPZ:GMA131.9E	**GMA131.9E**
AC 24 DC 24	DC 0...10 V	Open:90 Close:15	Yes	N4658	BPZ:GMA161.9E	**GMA161.9E**
AC 24 DC 24	Modbus RTU	Open:90 Close:15	Yes	N4658	S55499-D683	**GMA161.9E/MO**

For customers in Asia / Australia please choose S55499-D383; S55499-D384; S55499-D397; S55499-D391; S55499-D392; S55499-D402

3-port control ball valves, internally threaded, PN40

VBI61..

Internally threaded connections Rp.. as per ISO 7-1.
For use in heating, ventilating and air conditioning plants as a control.
For closed circuits.

Data sheet	N4211
Leakage rate	„Waterproof" as per EN 60534-4 L/1, better than class 4
Leakage rate bypass	< 1 % of k_{vs} value
Medium	Water Water with anti-freeze
Medium temperature	-10...120 °C
Valve characteristic	Throughport: equal-percentage Bypass: linear
Rangeability	> 500
Permissible operating pressure	1600 kPa
Material, valve body	Brass CW602N (DZR)
Material, inside set	Brass UNS C35330 (DZR), chromium-plated
PN class	PN 40
Warranty	60 Months

Range overview VBI61..

Con-nect. thread	GDB..9E Δp_{max} [kPa]	GQD../ GSD..9A Δp_{max} [kPa]	GMA../ GLB..9E Δp_{max} [kPa]	GLD..9E Δp_{max} [kPa]	DN	k_{vs} [m³/h]	Stock no.	Product no.
Rp ½"	350	350	350	350	15	1.6	BPZ:VBI61.15-1.6	**VBI61.15-1.6**
Rp ½"	350	350	350	350	15	2.5	BPZ:VBI61.15-2.5	**VBI61.15-2.5**
Rp ½"	350	350	350	350	15	4	BPZ:VBI61.15-4	**VBI61.15-4**
Rp ½"	350	350	350	350	15	6.3	BPZ:VBI61.15-6.3	**VBI61.15-6.3**
Rp ¾"	350	350	350	350	20	4	BPZ:VBI61.20-4	**VBI61.20-4**
Rp ¾"	350	350	350	350	20	6.3	BPZ:VBI61.20-6.3	**VBI61.20-6.3**
Rp 1"	350	350	350	350	25	10	BPZ:VBI61.25-10	**VBI61.25-10**
Rp 1¼"			350	350	32	16	BPZ:VBI61.32-16	**VBI61.32-16**
Rp 1½"			350	350	40	25	BPZ:VBI61.40-25	**VBI61.40-25**
Rp 2"			350	350	50	40	BPZ:VBI61.50-40	**VBI61.50-40**
Rp 2"			350	350	50	63	BPZ:VBI61.50-63	**VBI61.50-63**

Accessories for VBI61..

Product Title	Data sheet	Stock no.	Product no.
Temperature Adapter		S55846-Z115	**ALJ100**
Mounting kit for rotary actuators GMA..1E with spring-return		BPZ:ASK77.2	**ASK77.2**
Mounting kit for rotary actuators GDB..1E, GLB..1E, GDD..1E and GLD..1E without spring-return		BPZ:ASK77.3	**ASK77.3**
Mounting kits for rotary actuators with or without spring-return, for special types with switches or potentiometer		S55845-Z199	**ASK77.5**

Combinable actuator for VBI61..

Operating voltage [V]	Positioning signal	Positioning time [s]	Spring return function	Data sheet	Stock no.	Product no.
AC/DC 24	DC 0/2..10 V	30	No	A6V10636056	S55499-D232	**GSD161.9A**
AC/DC 24	2-position/3-position	150	No	A6V10636150_enAP	S55499-D383	**GDB141.9E**
AC/DC 24	DC 0/2...10 V	150	No	A6V10636150_enAP	S55499-D397	**GDB161.9E**

Combinable actuator for VBI61..

Operating voltage [V]	Positioning signal	Positioning time [s]	Spring return function	Data sheet	Stock no.	Product no.
AC 230	2-position/3-position	150	No	A6V10636150_enAP	S55499-D384	**GDB341.9E**
AC/DC 24	2-position/3-position	150	No	A6V10636150	S55499-D200	**GDB141.9E**
AC/DC 24	DC 0/2...10 V	150	No	A6V10636150	S55499-D275	**GDB161.9E**
AC 230	2-position/3-position	150	No	A6V10636150	S55499-D201	**GDB341.9E**
AC/DC 24	Modbus RTU	150	No	A6V10636150	S55499-D682	**GDB161.9E/MO**
AC 24 DC 24	DC 0/2...10 V	30	No	A6V11171770	S55499-D278	**GLD161.9E**
AC 24 DC 24	Modbus RTU	30	No	A6V11171770	S55499-D695	**GLD161.9E/MO**
AC/DC 24	2-position/3-position	150	No	A6V10636203_enAP	S55499-D391	**GLB141.9E**
AC/DC 24	DC 0/2...10 V	150	No	A6V10636203_enAP	S55499-D402	**GLB161.9E**
AC 230	2-position/3-position	150	No	A6V10636203_enAP	S55499-D392	**GLB341.9E**
AC/DC 24	2-position/3-position	150	No	A6V10636203	S55499-D204	**GLB141.9E**
AC/DC 24	DC 0/2...10 V	150	No	A6V10636203	S55499-D277	**GLB161.9E**
AC 230	2-position/3-position	150	No	A6V10636203	S55499-D205	**GLB341.9E**
AC/DC 24	Modbus RTU	150	No	A6V10636203	S55499-D681	**GLB161.9E/MO**
AC 24 DC 24	3-position	Open:30 Close:15	Yes	N4659	BPZ:GQD131.9A	**GQD131.9A**
AC 24 DC 24	DC 0...10 V	Open:30 Close:15	Yes	N4659	BPZ:GQD161.9A	**GQD161.9A**
AC 24 DC 24	3-position	Open:90 Close:15	Yes	N4658	BPZ:GMA131.9E	**GMA131.9E**
AC 24 DC 24	DC 0...10 V	Open:90 Close:15	Yes	N4658	BPZ:GMA161.9E	**GMA161.9E**
AC 24 DC 24	Modbus RTU	Open:90 Close:15	Yes	N4658	S55499-D683	**GMA161.9E/MO**

For customers in Asia / Australia please choose S55499-D383; S55499-D384; S55499-D397; S55499-D391; S55499-D392; S55499-D402

2-port ball open/close valves, internally threaded, PN40

VAI60..

Internally threaded connections Rp.. as per ISO 7-1.
For use in heating, ventilating and air conditioning plants as open/close ball valves. For closed circuits.

Data sheet	N4213
Leakage rate	„Waterproof" as per EN 60534-4 L/1, better than class 5
Medium	Cooling water Chilled water Water with anti-freeze Low-temperature hot water High-temperature hot water
Medium temperature	-10...120 °C
Permissible operating pressure	1600 kPa
Material, valve body	Brass CW602N (DZR)
Material, inside set	Dezincification resistant hot-pressed brass (DZR), CW602N, chromium-plated
PN class	PN 40
Warranty	60 Months

Range overview VAI60..

Con-nect. thread	GQD../ GSD..9A Δp_{max} [kPa]	GQD../ GSD..9A Δp_s [kPa]	GDB..9E Δp_{max} [kPa]	GDB..9E Δp_s [kPa]	GMA../ GLB..9E Δp_{max} [kPa]	GMA../GLB..9E Δp_s [kPa]	DN	k_{vs} [m³/h]	Stock no.	Product no.
Rp ½"	350	1400	350	1400	350	1400	15	15	BPZ:VAI60.15-15	**VAI60.15-15**
Rp ¾"	350	1400	350	1400	350	1400	20	22	BPZ:VAI60.20-22	**VAI60.20-22**
Rp 1"	350	1400	350	1400	350	1400	25	22	BPZ:VAI60.25-22	**VAI60.25-22**
Rp 1¼"					350	1000	32	35	BPZ:VAI60.32-35	**VAI60.32-35**
Rp 1½"					350	800	40	68	BPZ:VAI60.40-68	**VAI60.40-68**
Rp 2"					350	600	50	96	BPZ:VAI60.50-96	**VAI60.50-96**

Accessories for VAI60..

Product Title	Data sheet	Stock no.	Product no.
Temperature Adapter		S55846-Z115	**ALJ100**
Mounting kit for rotary actuators GMA..1E with spring-return		BPZ:ASK77.2	**ASK77.2**
Mounting kit for rotary actuators GDB..1E, GLB..1E, GDD..1E and GLD..1E without spring-return		BPZ:ASK77.3	**ASK77.3**
Mounting kits for rotary actuators with or without spring-return, for special types with switches or potentiometer		S55845-Z199	**ASK77.5**

Combinable actuator for VAI60..

Operating voltage [V]	Positioning signal	Positioning time [s]	Spring return function	Data sheet	Stock no.	Product no.
AC/DC 24	On-Off (2 wire SPDT)	30	No	A6V10636056	BPZ:GSD141.9A	**GSD141.9A**
AC 230	On-Off (2 wire SPDT)	30	No	A6V10636056	BPZ:GSD341.9A	**GSD341.9A**
AC/DC 24	2-position/3-position	150	No	A6V10636203	S55499-D204	**GLB141.9E**
AC 230	2-position/3-position	150	No	A6V10636203	S55499-D205	**GLB341.9E**
AC 24 DC 24	2-position	Open:30 Close:15	Yes	N4659	BPZ:GQD121.9A	**GQD121.9A**

Combinable actuator for VAI60..

Operating voltage [V]	Positioning signal	Positioning time [s]	Spring return function	Data sheet	Stock no.	Product no.
AC 230 DC 24	2-position	Open:30 Close:15	Yes	N4659	BPZ:GQD321.9A	**GQD321.9A**
AC 24 DC 24	2-position	Open:90 Close:15	Yes	N4658	BPZ:GMA121.9E	**GMA121.9E**
AC 230 DC 24	2-position	Open:90 Close:15	Yes	N4658	BPZ:GMA321.9E	**GMA321.9E**

3-port changeover ball valve, internally threaded, PN40

VBI60..

Internally threaded connections Rp.. as per ISO 7-1.
For use in heating, ventilating and air conditioning plants as changeover ball valves. For closed circuits.

Data sheet	N4213
Leakage rate	„Waterproof“ as per EN 60534-4 L/1, better than class 4
Leakage rate bypass	< 1 % of k_{vs} value
Medium	Cooling water Chilled water Water with anti-freeze Low-temperature hot water High-temperature hot water
Medium temperature	-10...120 °C
Permissible operating pressure	1600 kPa
Material, valve body	Brass CW602N (DZR)
Material, inside set	Dezincification resistant hot-pressed brass (DZR), CW602N, chromium-plated
PN class	PN 40
Warranty	60 Months

Range overview VBI60..

Con-nect. thread	GDB..9E Δp_{max} [kPa]	GQD../ GSD..9A Δp_{max} [kPa]	GMA../ GLB..9E Δp_{max} [kPa]	DN	k_{vs} [m³/h]	Stock no.	Product no.
Rp ½"	350	350	350	15	5	BPZ:VBI60.15-5L	**VBI60.15-5L**
Rp ½"	350	350	350	15	12	BPZ:VBI60.15-12T	**VBI60.15-12T**
Rp ¾"	350	350	350	20	9	BPZ:VBI60.20-9L	**VBI60.20-9L**
Rp ¾"	350	350	350	20	16	BPZ:VBI60.20-16T	**VBI60.20-16T**
Rp 1"	350	350	350	25	9	BPZ:VBI60.25-9L	**VBI60.25-9L**
Rp 1"	350	350	350	25	16	BPZ:VBI60.25-16T	**VBI60.25-16T**
Rp 1¼"			350	32	13	BPZ:VBI60.32-13L	**VBI60.32-13L**
Rp 1¼"			350	32	25	BPZ:VBI60.32-25T	**VBI60.32-25T**
Rp 1½"			350	40	25	BPZ:VBI60.40-25L	**VBI60.40-25L**
Rp 1½"			350	40	49	BPZ:VBI60.40-49T	**VBI60.40-49T**
Rp 2"			350	50	37	BPZ:VBI60.50-37L	**VBI60.50-37L**
Rp 2"			350	50	73	BPZ:VBI60.50-73T	**VBI60.50-73T**

Accessories for VBI60..

Product Title	Data sheet	Stock no.	Product no.
Temperature Adapter		S55846-Z115	**ALJ100**
Mounting kit for rotary actuators GMA..1E with spring-return		BPZ:ASK77.2	**ASK77.2**
Mounting kit for rotary actuators GDB..1E, GLB..1E, GDD..1E and GLD..1E without spring-return		BPZ:ASK77.3	**ASK77.3**
Mounting kits for rotary actuators with or without spring-return, for special types with switches or potentiometer		S55845-Z199	**ASK77.5**

Combinable actuator for VBI60..

Operating voltage [V]	Positioning signal	Positioning time [s]	Spring return function	Data sheet	Stock no.	Product no.
AC/DC 24	On-Off (2 wire SPDT)	30	No	A6V10636056	BPZ:GSD141.9A	**GSD141.9A**
AC 230	On-Off (2 wire SPDT)	30	No	A6V10636056	BPZ:GSD341.9A	**GSD341.9A**
AC/DC 24	2-position/3-position	150	No	A6V10636203	S55499-D204	**GLB141.9E**
AC 230	2-position/3-position	150	No	A6V10636203	S55499-D205	**GLB341.9E**
AC 24 DC 24	2-position	Open:30 Close:15	Yes	N4659	BPZ:GQD121.9A	**GQD121.9A**
AC 230 DC 24	2-position	Open:30 Close:15	Yes	N4659	BPZ:GQD321.9A	**GQD321.9A**
AC 24 DC 24	2-position	Open:90 Close:15	Yes	N4658	BPZ:GMA121.9E	**GMA121.9E**
AC 230 DC 24	2-position	Open:90 Close:15	Yes	N4658	BPZ:GMA321.9E	**GMA321.9E**

2-port control ball valves, externally threaded, PN40

VAG61..

For use in heating, ventilating and air conditioning plants as a control valve. For closed circuits.

- Brass CW602N (DZR) ball valve body
- Flat sealing connections with external thread G..B to ISO 228-1
- Applications with auxiliary functions (e.g., switch, potentiometer) can also be combined with standard rotary actuators belonging to the DAC range

Data sheet	N4212
Leakage rate	„Waterproof" as per EN 60534-4 L/1, better than class 5
Medium	Water Chilled water Cooling water Low-temperature hot water High-temperature hot water Water with anti-freeze
Medium temperature	-10...120 °C
Permissible operating pressure	1600 kPa
Material, valve body	Brass CW602N (DZR)
Material, inside set	Brass CW602N (DZR), chromium-plated
PN class	PN 40
Warranty	60 Months

Range overview VAG61..

Con-nect. thread	GQD../ GSD..9A Δp_{max} [kPa]	GQD../ GSD..9A Δp_s [kPa]	GDB..9E Δp_{max} [kPa]	GDB..9E Δp_s [kPa]	GMA../ GLB..9E Δp_{max} [kPa]	GMA../G LB..9E Δp_s [kPa]	GLD..9E Δp_{max} [kPa]	GLD..9E Δp_s [kPa]	DN	k_{vs} [m³/h]	Stock no.	Product no.
G 1" B	350	1400	350	1400	350	1400	350	1400	15	1	S55230-V100	**VAG61.15-1**
G 1" B	350	1400	350	1400	350	1400	350	1400	15	1.6	S55230-V101	**VAG61.15-1.6**
G 1" B	350	1400	350	1400	350	1400	350	1400	15	2.5	S55230-V102	**VAG61.15-2.5**
G 1" B	350	1400	350	1400	350	1400	350	1400	15	4	S55230-V103	**VAG61.15-4**
G 1" B	350	1400	350	1400	350	1400	350	1400	15	6.3	S55230-V104	**VAG61.15-6.3**
G 1¼" B	350	1400	350	1400	350	1400	350	1400	20	4	S55230-V105	**VAG61.20-4**
G 1¼" B	350	1400	350	1400	350	1400	350	1400	20	6.3	S55230-V106	**VAG61.20-6.3**
G 1¼" B	350	1400	350	1400	350	1400	350	1400	20	10	S55230-V107	**VAG61.20-10**
G 1½" B	350	1400	350	1400	350	1400	350	1400	25	6.3	S55230-V108	**VAG61.25-6.3**
G 1½" B	350	1400	350	1400	350	1400	350	1400	25	10	S55230-V109	**VAG61.25-10**
G 1½" B	350	1400	350	1400	350	1400	350	1400	25	16	S55230-V110	**VAG61.25-16**
G 2" B					350	1000	350	1000	32	10	S55230-V111	**VAG61.32-10**
G 2" B					350	1000	350	1000	32	16	S55230-V112	**VAG61.32-16**
G 2" B					350	1000	350	1000	32	25	S55230-V113	**VAG61.32-25**
G 2¼" B					350	800	350	800	40	16	S55230-V114	**VAG61.40-16**
G 2¼" B					350	800	350	800	40	25	S55230-V115	**VAG61.40-25**
G 2¼" B					350	800	350	800	40	40	S55230-V116	**VAG61.40-40**
G 2¾" B					350	600	350	600	50	25	S55230-V117	**VAG61.50-25**
G 2¾" B					350	600	350	600	50	40	S55230-V118	**VAG61.50-40**
G 2¾" B					350	600	350	600	50	63	S55230-V119	**VAG61.50-63**

Accessories for VAG61..

Product Title	Data sheet	Stock no.	Product no.
Temperature Adapter		S55846-Z115	**ALJ100**
Mounting kit for rotary actuators GMA..1E with spring-return		BPZ:ASK77.2	**ASK77.2**
Mounting kit for rotary actuators GDB..1E, GLB..1E, GDD..1E and GLD..1E without spring-return		BPZ:ASK77.3	**ASK77.3**
Mounting kits for rotary actuators with or without spring-return, for special types with switches or potentiometer		S55845-Z199	**ASK77.5**

Accessories for VAG61..

Product Title	Data sheet	Stock no.	Product no.
Malleable cast iron fitting G 1" / Rp ½", set of 2	N4363	BPZ:ALG152	**ALG152**
Brass fitting G 1" / Rp ½", 100°C, set of 2	N4363	S55846-Z100	**ALG152B**
Malleable cast iron fitting G 1¼" / Rp ¾", set of 2	N4363	BPZ:ALG202	**ALG202**
Brass fitting G 1¼" / Rp ¾", 100 °C, set of 2	N4363	S55846-Z102	**ALG202B**
Malleable cast iron fitting G 1½" / Rp 1", set of 2	N4363	BPZ:ALG252	**ALG252**
Brass fitting G 1½" / Rp 1", 100 °C, set of 2	N4363	S55846-Z104	**ALG252B**
Malleable cast iron fitting G 2" / Rp 1¼", set of 2	N4363	BPZ:ALG322	**ALG322**
Brass fitting G 2" / Rp 1¼", 100 °C, set of 2	N4363	S55846-Z106	**ALG322B**
Malleable cast iron fitting G 2¼" / Rp 1½", set of 2	N4363	BPZ:ALG402	**ALG402**
Brass fitting G 2¼" / Rp 1½", 100 °C, set of 2	N4363	S55846-Z108	**ALG402B**
Malleable cast iron fitting G 2¾" / Rp 2", set of 2	N4363	BPZ:ALG502	**ALG502**
Brass fitting G 2 ¾" / Rp 2", 100 °C, set of 2	N4363	S55846-Z110	**ALG502B**

Combinable actuator for VAG61..

Operating voltage [V]	Positioning signal	Positioning time [s]	Spring return function	Data sheet	Stock no.	Product no.
AC 24 DC 24	DC 0/2...10 V	30	No	A6V12725064	S55499-D736	**GDD161.9E**
AC/DC 24	DC 0/2..10 V	30	No	A6V10636056	S55499-D232	**GSD161.9A**
AC/DC 24	2-position/3-position	150	No	A6V10636150_enAP	S55499-D383	**GDB141.9E**
AC/DC 24	DC 0/2...10 V	150	No	A6V10636150_enAP	S55499-D397	**GDB161.9E**
AC 230	2-position/3-position	150	No	A6V10636150_enAP	S55499-D384	**GDB341.9E**
AC/DC 24	2-position/3-position	150	No	A6V10636150	S55499-D200	**GDB141.9E**
AC/DC 24	DC 0/2...10 V	150	No	A6V10636150	S55499-D275	**GDB161.9E**
AC 230	2-position/3-position	150	No	A6V10636150	S55499-D201	**GDB341.9E**
AC/DC 24	Modbus RTU	150	No	A6V10636150	S55499-D682	**GDB161.9E/MO**
AC 24 DC 24	DC 0/2...10 V	30	No	A6V11171770	S55499-D278	**GLD161.9E**
AC 24 DC 24	Modbus RTU	30	No	A6V11171770	S55499-D695	**GLD161.9E/MO**
AC/DC 24	2-position/3-position	150	No	A6V10636203_enAP	S55499-D391	**GLB141.9E**
AC/DC 24	DC 0/2...10 V	150	No	A6V10636203_enAP	S55499-D402	**GLB161.9E**
AC 230	2-position/3-position	150	No	A6V10636203_enAP	S55499-D392	**GLB341.9E**
AC/DC 24	2-position/3-position	150	No	A6V10636203	S55499-D204	**GLB141.9E**
AC/DC 24	DC 0/2...10 V	150	No	A6V10636203	S55499-D277	**GLB161.9E**
AC 230	2-position/3-position	150	No	A6V10636203	S55499-D205	**GLB341.9E**
AC/DC 24	Modbus RTU	150	No	A6V10636203	S55499-D681	**GLB161.9E/MO**
AC 24 DC 24	3-position	Open:30 Close:15	Yes	N4659	BPZ:GQD131.9A	**GQD131.9A**
AC 24 DC 24	DC 0...10 V	Open:30 Close:15	Yes	N4659	BPZ:GQD161.9A	**GQD161.9A**

Combinable actuator for VAG61..

Operating voltage [V]	Positioning signal	Positioning time [s]	Spring return function	Data sheet	Stock no.	Product no.
AC 24 DC 24	3-position	Open:90 Close:15	Yes	N4658	BPZ:GMA131.9E	**GMA131.9E**
AC 24 DC 24	DC 0...10 V	Open:90 Close:15	Yes	N4658	BPZ:GMA161.9E	**GMA161.9E**
AC 24 DC 24	Modbus RTU	Open:90 Close:15	Yes	N4658	S55499-D683	**GMA161.9E/MO**

For customers in Asia / Australia please choose S55499-D383; S55499-D384; S55499-D397; S55499-D391; S55499-D392; S55499-D402

VBG61..

3-port control ball valves, externally threaded, PN40

For use in heating, ventilating and air conditioning plants as a control valve. For closed circuits.

- Brass CW602N (DZR) ball valve body
- Flat sealing connections with external thread G..B to ISO 228-1
- Applications with auxiliary functions (e.g., switch, potentiometer) can also be combined with standard rotary actuators belonging to the DAC range

Data sheet	N4212
Leakage rate	„Waterproof“ as per EN 60534-4 L/1, better than class 4
Leakage rate bypass	< 1 % of k_{vs} value
Medium	Water Chilled water Cooling water Low-temperature hot water High-temperature hot water Water with anti-freeze
Medium temperature	-10...120 °C
Permissible operating pressure	1600 kPa
Material, valve body	Brass CW602N (DZR)
Material, inside set	Brass CW602N (DZR), chromium-plated
PN class	PN 40
Warranty	60 Months

Range overview VBG61..

Con-nect. thread	GDB..9E Δp_{max} [kPa]	GQD../ GSD..9A Δp_{max} [kPa]	GMA../ GLB..9E Δp_{max} [kPa]	GLD..9E Δp_{max} [kPa]	DN	k_{vs} [m³/h]	Stock no.	Product no.
G 1"	350	350	350	350	15	1.6	S55230-V120	**VBG61.15-1.6**
G 1"	350	350	350	350	15	2.5	S55230-V121	**VBG61.15-2.5**
G 1"	350	350	350	350	15	4	S55230-V122	**VBG61.15-4**
G 1"	350	350	350	350	15	6.3	S55230-V123	**VBG61.15-6.3**
G 1¼"	350	350	350	350	20	4	S55230-V124	**VBG61.20-4**
G 1¼"	350	350	350	350	20	6.3	S55230-V125	**VBG61.20-6.3**
G 1½"	350	350	350	350	25	10	S55230-V126	**VBG61.25-10**
G 2"			350	350	32	16	S55230-V127	**VBG61.32-16**
G 2¼"			350	350	40	25	S55230-V128	**VBG61.40-25**
G 2¾"			350	350	50	40	S55230-V129	**VBG61.50-40**

8

Accessories for VBG61..

Product Title	Data sheet	Stock no.	Product no.
Temperature Adapter		S55846-Z115	**ALJ100**
Mounting kit for rotary actuators GMA..1E with spring-return		BPZ:ASK77.2	**ASK77.2**
Mounting kit for rotary actuators GDB..1E, GLB..1E, GDD..1E and GLD..1E without spring-return		BPZ:ASK77.3	**ASK77.3**
Mounting kits for rotary actuators with or without spring-return, for special types with switches or potentiometer		S55845-Z199	**ASK77.5**
Malleable cast iron fitting G 1" / Rp ½", set of 3	N4463	BPZ:ALG153	**ALG153**
Brass fitting G 1" / Rp ½", 100 °C, set of 3	N4463	S55846-Z101	**ALG153B**
Malleable cast iron fitting G 1¼" / Rp ¾", set of 3	N4463	BPZ:ALG203	**ALG203**
Brass fitting G 1¼" / Rp ¾", 100 °C, set of 3	N4463	S55846-Z103	**ALG203B**
Malleable cast iron fitting G 1½" / Rp 1", set of 3	N4463	BPZ:ALG253	**ALG253**
Brass fitting G 1½" / Rp 1", 100 °C, set of 3	N4463	S55846-Z105	**ALG253B**
Malleable cast iron fitting G 2" / Rp 1¼", set of 3	N4463	BPZ:ALG323	**ALG323**
Brass fitting G 2" / Rp 1¼", 100 °C, set of 3	N4463	S55846-Z107	**ALG323B**
Malleable cast iron fitting G 2¼" / Rp 1½", set of 3	N4463	BPZ:ALG403	**ALG403**

Accessories for VBG61..

Product Title	Data sheet	Stock no.	Product no.
Brass fitting G 2¼" / Rp 1½", 100 °C, set of 3	N4463	S55846-Z109	**ALG403B**
Malleable cast iron fitting G 2¾" / Rp 2", set of 3	N4463	BPZ:ALG503	**ALG503**
Brass fitting G 2 ¾" / Rp 2", 100 °C, set of 3	N4463	S55846-Z111	**ALG503B**

Combinable actuator for VBG61..

Operating voltage [V]	Positioning signal	Positioning time [s]	Spring return function	Data sheet	Stock no.	Product no.
AC 24 DC 24	DC 0/2...10 V	30	No	A6V12725064	S55499-D736	**GDD161.9E**
AC/DC 24	DC 0/2..10 V	30	No	A6V10636056	S55499-D232	**GSD161.9A**
AC/DC 24	2-position/3-position	150	No	A6V10636150_enAP	S55499-D383	**GDB141.9E**
AC/DC 24	DC 0/2...10 V	150	No	A6V10636150_enAP	S55499-D397	**GDB161.9E**
AC 230	2-position/3-position	150	No	A6V10636150_enAP	S55499-D384	**GDB341.9E**
AC/DC 24	2-position/3-position	150	No	A6V10636150	S55499-D200	**GDB141.9E**
AC/DC 24	DC 0/2...10 V	150	No	A6V10636150	S55499-D275	**GDB161.9E**
AC 230	2-position/3-position	150	No	A6V10636150	S55499-D201	**GDB341.9E**
AC/DC 24	Modbus RTU	150	No	A6V10636150	S55499-D682	**GDB161.9E/MO**
AC 24 DC 24	DC 0/2...10 V	30	No	A6V11171770	S55499-D278	**GLD161.9E**
AC 24 DC 24	Modbus RTU	30	No	A6V11171770	S55499-D695	**GLD161.9E/MO**
AC/DC 24	2-position/3-position	150	No	A6V10636203_enAP	S55499-D391	**GLB141.9E**
AC/DC 24	DC 0/2...10 V	150	No	A6V10636203_enAP	S55499-D402	**GLB161.9E**
AC 230	2-position/3-position	150	No	A6V10636203_enAP	S55499-D392	**GLB341.9E**
AC/DC 24	2-position/3-position	150	No	A6V10636203	S55499-D204	**GLB141.9E**
AC/DC 24	DC 0/2...10 V	150	No	A6V10636203	S55499-D277	**GLB161.9E**
AC 230	2-position/3-position	150	No	A6V10636203	S55499-D205	**GLB341.9E**
AC/DC 24	Modbus RTU	150	No	A6V10636203	S55499-D681	**GLB161.9E/MO**
AC 24 DC 24	3-position	Open:30 Close:15	Yes	N4659	BPZ:GQD131.9A	**GQD131.9A**
AC 24 DC 24	DC 0...10 V	Open:30 Close:15	Yes	N4659	BPZ:GQD161.9A	**GQD161.9A**
AC 24 DC 24	3-position	Open:90 Close:15	Yes	N4658	BPZ:GMA131.9E	**GMA131.9E**
AC 24 DC 24	DC 0...10 V	Open:90 Close:15	Yes	N4658	BPZ:GMA161.9E	**GMA161.9E**
AC 24 DC 24	Modbus RTU	Open:90 Close:15	Yes	N4658	S55499-D683	**GMA161.9E/MO**

For customers in Asia / Australia please choose S55499-D383; S55499-D384; S55499-D397; S55499-D391; S55499-D392; S55499-D402

VWG41.10..

6-port control ball valves, externally threaded, PN16, DN10

Used in heated/chilled ceilings as control ball valve. For closed circuits.

- Control ball valve body made of hot-pressed brass CW617N
- Flat sealing, external threaded connections G..B, as per ISO 228-1
- Can be combined with standard electromotoric rotary actuators from the DAC product range for applications with additional functions (such as auxiliary switches, potentiometers)

Data sheet	A6V10564480
Leakage rate	"Air tight" per EN 12266-1, class A
Medium	Water with anti-freeze Water Low-temperature hot water
Medium temperature	5...90 °C
Permissible operating pressure	1600 kPa
Material, valve body	Hot-pressed brass
Material, inside set	Brass CW614N, chrome plated
PN class	PN 16
Warranty	60 Months

Range overview VWG41.10..

DN	k_{vs} right [m³/h]	k_{vs} left [m³/h]	Con-nect. thread	GDB..9E Δp_{max} [kPa]	Stock no.	Product no.
10	0.4	0.25	G ½"	200	S55230-V158	**VWG41.10-0.25-0.4**
10	0.65	0.25	G ½"	200	S55230-V159	**VWG41.10-0.25-0.65**
10	1	0.25	G ½"	200	S55230-V160	**VWG41.10-0.25-1.0**
10	1.3	0.25	G ½"	200	S55230-V175	**VWG41.10-0.25-1.3**
10	1.6	0.25	G ½"	200	S55230-V176	**VWG41.10-0.25-1.6**
10	1.9	0.25	G ½"	200	S55230-V177	**VWG41.10-0.25-1.9**
10	0.4	0.4	G ½"	200	S55230-V178	**VWG41.10-0.4-0.4**
10	0.65	0.4	G ½"	200	S55230-V161	**VWG41.10-0.4-0.65**
10	1	0.4	G ½"	200	S55230-V162	**VWG41.10-0.4-1.0**
10	1.3	0.4	G ½"	200	S55230-V163	**VWG41.10-0.4-1.3**
10	1.6	0.4	G ½"	200	S55230-V164	**VWG41.10-0.4-1.6**
10	1.9	0.4	G ½"	200	S55230-V179	**VWG41.10-0.4-1.9**
10	0.65	0.65	G ½"	200	S55230-V180	**VWG41.10-0.65-0.65**
10	1	0.65	G ½"	200	S55230-V165	**VWG41.10-0.65-1.0**
10	1.3	0.65	G ½"	200	S55230-V166	**VWG41.10-0.65-1.3**
10	1.6	0.65	G ½"	200	S55230-V167	**VWG41.10-0.65-1.6**
10	1.9	0.65	G ½"	200	S55230-V181	**VWG41.10-0.65-1.9**
10	1.0	1.0	G ½"	200	S55230-V182	**VWG41.10-1.0-1.0**
10	1.3	1	G ½"	200	S55230-V168	**VWG41.10-1.0-1.3**
10	1.6	1	G ½"	200	S55230-V169	**VWG41.10-1.0-1.6**
10	1.9	1	G ½"	200	S55230-V170	**VWG41.10-1.0-1.9**
10	1.3	1.3	G ½"	200	S55230-V183	**VWG41.10-1.3-1.3**
10	1.6	1.3	G ½"	200	S55230-V171	**VWG41.10-1.3-1.6**
10	1.9	1.3	G ½"	200	S55230-V172	**VWG41.10-1.3-1.9**
10	1.6	1.6	G ½"	200	S55230-V184	**VWG41.10-1.6-1.6**
10	1.9	1.6	G ½"	200	S55230-V173	**VWG41.10-1.6-1.9**
10	1.9	1.9	G ½"	200	S55230-V174	**VWG41.10-1.9-1.9**

6-port control ball valves, externally threaded, PN16, DN20

VWG41.20..

Used in heated/chilled ceilings as control ball valve. For closed circuits.
- Control ball valve body made of hot-pressed brass CW617N
- Flat sealing, external threaded connections G..B, as per ISO 228-1
- Can be combined with standard electromotoric rotary actuators from the DAC product range for applications with additional functions (such as auxiliary switches, potentiometers)

Data sheet	A6V10564480
Leakage rate	"Air tight" per EN 12266-1, class A
Medium	Water with anti-freeze Water Low-temperature hot water
Medium temperature	5...90 °C
Permissible operating pressure	1600 kPa
Material, valve body	Hot-pressed brass
Material, inside set	Brass CW614N, chrome plated
PN class	PN 16
Warranty	60 Months

Range overview VWG41.20..

DN	k_{vs} right [m³/h]	k_{vs} left [m³/h]	Con-nect. thread	GDB..9E Δp_{max} [kPa]	Stock no.	Product no.
20	2.5	0.25	G 1"	200	S55230-V185	**VWG41.20-0.25-2.5**
20	3.45	0.25	G 1"	200	S55230-V186	**VWG41.20-0.25-3.45**
20	4.25	0.25	G 1"	200	S55230-V187	**VWG41.20-0.25-4.25**
20	2.5	0.4	G 1"	200	S55230-V188	**VWG41.20-0.4-2.5**
20	3.45	0.4	G 1"	200	S55230-V189	**VWG41.20-0.4-3.45**
20	4.25	0.4	G 1"	200	S55230-V190	**VWG41.20-0.4-4.25**
20	2.5	0.65	G 1"	200	S55230-V150	**VWG41.20-0.65-2.5**
20	3.45	0.65	G 1"	200	S55230-V191	**VWG41.20-0.65-3.45**
20	4.25	0.65	G 1"	200	S55230-V192	**VWG41.20-0.65-4.25**
20	2.5	1	G 1"	200	S55230-V152	**VWG41.20-1.0-2.5**
20	3.45	1.0	G 1"	200	S55230-V193	**VWG41.20-1.0-3.45**
20	4.25	1.0	G 1"	200	S55230-V194	**VWG41.20-1.0-4.25**
20	2.5	1.3	G 1"	200	S55230-V195	**VWG41.20-1.3-2.5**
20	3.45	1.3	G 1"	200	S55230-V196	**VWG41.20-1.3-3.45**
20	4.25	1.3	G 1"	200	S55230-V197	**VWG41.20-1.3-4.25**
20	2.5	1.6	G 1"	200	S55230-V153	**VWG41.20-1.6-2.5**
20	3.45	1.6	G 1"	200	S55230-V154	**VWG41.20-1.6-3.45**
20	4.25	1.6	G 1"	200	S55230-V198	**VWG41.20-1.6-4.25**
20	2.5	2.5	G 1"	200	S55230-V200	**VWG41.20-2.5-2.5**
20	3.45	2.5	G 1"	200	S55230-V155	**VWG41.20-2.5-3.45**
20	4.25	2.5	G 1"	200	S55230-V156	**VWG41.20-2.5-4.25**
20	3.45	3.45	G 1"	200	S55230-V201	**VWG41.20-3.45-3.45**
20	4.25	4.25	G 1"	200	S55230-V157	**VWG41.20-4.25-4.25**

Combinable actuator for VWG4..

Operating voltage [V]	Positioning signal	Positioning time [s]	Spring return function	Data sheet	Stock no.	Product no.
AC/DC 24	DC 0/2..10 V	30	No	A6V10636056	S55499-D232	**GSD161.9A**
AC 230	On-Off (2 wire SPDT)	30	No	A6V10636056	BPZ:GSD341.9A	**GSD341.9A**
AC/DC 24	DC 0/2...10 V	150	No	A6V10636150	S55499-D275	**GDB161.9E**

Combinable actuator for VWG4..

Operating voltage [V]	Positioning signal	Positioning time [s]	Spring return function	Data sheet	Stock no.	Product no.
AC 230	2-position/3-position	150	No	A6V10636150	S55499-D201	**GDB341.9E**
AC 24	KNX S-Mode or KNX PL-Link	150	No	A6V10725318	S55499-D203	**GDB111.9E/KN**
AC/DC 24	Modbus RTU	150	No	A6V10636150	S55499-D682	**GDB161.9E/MO**

VWG42.10..

6-port compact control ball valves, externally threaded, PN16, DN10

Used in heated/chilled ceilings as control ball valve. For closed circuits.

- Control ball valve body made of hot-pressed brass CW617N
- Flat sealing, externally threaded connections G..B, as per ISO 228-1
- Can be combined with 6-port electromotoric rotary actuator range for applications with additional functions

Data sheet	A6V14034341
Angular rotation	90°
Leakage rate	"Air tight" per EN 12266-1, class A
Medium	Water with anti-freeze Water Low-temperature hot water
Medium temperature	5...90 °C
Permissible operating pressure	1600 kPa
Material, valve body	Hot-pressed brass
Material, inside set	PPSU
PN class	PN 16

Range overview VWG42.10..

DN	k_{vs} right [m³/h]	k_{vs} left [m³/h]	Con-nect. thread	GDB..9E Δp_{max} [kPa]	Stock no.	Product no.
10	0.25	0.25	G ½"	200	S55230-V240	**VWG42.10-0.25-0.25**
10	0.4	0.25	G ½"	200	S55230-V241	**VWG42.10-0.25-0.4**
10	0.65	0.25	G ½"	200	S55230-V242	**VWG42.10-0.25-0.65**
10	1.0	0.25	G ½"	200	S55230-V243	**VWG42.10-0.25-1.0**
10	1.3	0.25	G ½"	200	S55230-V244	**VWG42.10-0.25-1.3**
10	1.6	0.25	G ½"	200	S55230-V245	**VWG42.10-0.25-1.6**
10	1.95	0.25	G ½"	200	S55230-V246	**VWG42.10-0.25-1.95**
10	0.4	0.4	G ½"	200	S55230-V247	**VWG42.10-0.4-0.4**
10	0.65	0.4	G ½"	200	S55230-V248	**VWG42.10-0.4-0.65**
10	1.0	0.4	G ½"	200	S55230-V249	**VWG42.10-0.4-1.0**
10	1.3	0.4	G ½"	200	S55230-V250	**VWG42.10-0.4-1.3**
10	1.6	0.4	G ½"	200	S55230-V251	**VWG42.10-0.4-1.6**

Range overview VWG42.10..

DN	k_{vs} right [m³/h]	k_{vs} left [m³/h]	Con-nect. thread	GDB..9E Δp_{max} [kPa]	Stock no.	Product no.
10	1.95	0.4	G ½"	200	S55230-V252	VWG42.10-0.4-1.95
10	0.65	0.65	G ½"	200	S55230-V253	VWG42.10-0.65-0.65
10	1.0	0.65	G ½"	200	S55230-V254	VWG42.10-0.65-1.0
10	0.25	0.25	G ½"	200	S55230-V255	VWG42.10-0.65-1.3
10	1.6	0.65	G ½"	200	S55230-V256	VWG42.10-0.65-1.6
10	1.95	0.65	G ½"	200	S55230-V257	VWG42.10-0.65-1.95
10	1.0	1.0	G ½"	200	S55230-V258	VWG42.10-1.0-1.0
10	1.3	1.0	G ½"	200	S55230-V259	VWG42.10-1.0-1.3
10	1.6	1.0	G ½"	200	S55230-V260	VWG42.10-1.0-1.6
10	1.95	1.0	G ½"	200	S55230-V261	VWG42.10-1.0-1.95
10	1.3	1.3	G ½"	200	S55230-V262	VWG42.10-1.3-1.3
10	1.6	1.3	G ½"	200	S55230-V263	VWG42.10-1.3-1.6
10	1.95	1.3	G ½"	200	S55230-V264	VWG42.10-1.3-1.95
10	1.6	1.6	G ½"	200	S55230-V265	VWG42.10-1.6-1.6
10	1.95	1.6	G ½"	200	S55230-V266	VWG42.10-1.6-1.95
10	1.95	1.95	G ½"	200	S55230-V267	VWG42.10-1.95-1.95

Accessories for VWG41.10..

Product Title	Data sheet	Stock no.	Product no.
Brass fitting G ½" / Rp ½", set of 2		S55845-Z195	**ALG13.152B**
Insulation cover for VWG41.10 6-Way ball valve		S55845-Z194	**ALI10VWG41**

Accessories for VWG41.20..

Product Title	Data sheet	Stock no.	Product no.
Brass fitting G 1" / G ½", 5 °C - 90 °C, set of 2	A6V10564480	S55845-Z156	**ALN15.152B**
Brass fitting G 1" / G ¾", 5 °C - 90 °C, set of 2	A6V10564480	S55845-Z157	**ALN15.202B**
Brass fitting G 1" / Rp ½", set of 2		S55845-Z158	**ALG15.152B**
Brass fitting G 1" / Rp ¾", set of 2		S55845-Z159	**ALG15.202B**
Brass fitting G 1" / Rp 1", set of 2		S55845-Z160	**ALG15.252B**
Insulation cover for VWG41.20 6-Way ball valve	A6V10564480	S55845-Z161	**ALI20VWG41**

VAG60..

2-port open/close ball valves, externally threaded, PN40

For use in heating, ventilating and air conditioning plants as open/close ball valve. For closed circuits.

- Brass CW602N (DZR) ball valve body
- Flat sealing connections with external thread G..B to ISO 228-1
- Applications with auxiliary functions (e.g., switch, potentiometer) can also be combined with standard rotary actuators belonging to the DAC range

Data sheet	N4214
Leakage rate	„Waterproof“ as per EN 60534-4 L/1, better than class 5
Medium	Water Chilled water Cooling water Low-temperature hot water High-temperature hot water Water with anti-freeze
Medium temperature	-10...120 °C
Permissible operating pressure	1600 kPa
Material, inside set	Dezincification resistant hot-pressed brass (DZR), CW602N, chromium-plated
PN class	PN 40
Warranty	60 Months

Range overview VAG60..

Con-nect. thread	GQD../ GSD..9A Δp_{max} [kPa]	GQD../ GSD..9A Δp_s [kPa]	GDB..9E Δp_{max} [kPa]	GDB..9E Δp_s [kPa]	GMA../ GLB..9E Δp_{max} [kPa]	GMA../GL B..9E Δp_s [kPa]	DN	k_{vs} [m³/h]	Stock no.	Product no.
G 1" B	350	1400	350	1400	350	1400	15	9	S55230-V130	**VAG60.15-9**
G 1¼" B	350	1400	350	1400	350	1400	20	17	S55230-V131	**VAG60.20-17**
G 1½" B	350	1400	350	1400	350	1400	25	22	S55230-V132	**VAG60.25-22**
G 2" B					350	1000	32	35	S55230-V133	**VAG60.32-35**
G 2¼" B					350	800	40	68	S55230-V134	**VAG60.40-68**
G 2¾" B					350	600	50	96	S55230-V135	**VAG60.50-96**

Accessories for VAG60..

Product Title	Data sheet	Stock no.	Product no.
Temperature Adapter		S55846-Z115	**ALJ100**
Mounting kit for rotary actuators GMA..1E with spring-return		BPZ:ASK77.2	**ASK77.2**
Mounting kit for rotary actuators GDB..1E, GLB..1E, GDD..1E and GLD..1E without spring-return		BPZ:ASK77.3	**ASK77.3**
Mounting kits for rotary actuators with or without spring-return, for special types with switches or potentiometer		S55845-Z199	**ASK77.5**
Malleable cast iron fitting G 1" / Rp ½", set of 2	N4363	BPZ:ALG152	**ALG152**
Brass fitting G 1" / Rp ½", 100°C, set of 2	N4363	S55846-Z100	**ALG152B**
Malleable cast iron fitting G 1¼" / Rp ¾", set of 2	N4363	BPZ:ALG202	**ALG202**
Brass fitting G 1¼" / Rp ¾", 100 °C, set of 2	N4363	S55846-Z102	**ALG202B**
Malleable cast iron fitting G 1½" / Rp 1", set of 2	N4363	BPZ:ALG252	**ALG252**
Brass fitting G 1½" / Rp 1", 100 °C, set of 2	N4363	S55846-Z104	**ALG252B**
Malleable cast iron fitting G 2" / Rp 1¼", set of 2	N4363	BPZ:ALG322	**ALG322**
Brass fitting G 2" / Rp 1¼", 100 °C, set of 2	N4363	S55846-Z106	**ALG322B**
Malleable cast iron fitting G 2¼" / Rp 1½", set of 2	N4363	BPZ:ALG402	**ALG402**
Brass fitting G 2¼" / Rp 1½", 100 °C, set of 2	N4363	S55846-Z108	**ALG402B**
Malleable cast iron fitting G 2¾" / Rp 2", set of 2	N4363	BPZ:ALG502	**ALG502**
Brass fitting G 2 ¾" / Rp 2", 100 °C, set of 2	N4363	S55846-Z110	**ALG502B**

Combinable actuator for VAG60..

Operating voltage [V]	Positioning signal	Positioning time [s]	Spring return function	Data sheet	Stock no.	Product no.
AC/DC 24	On-Off (2 wire SPDT)	30	No	A6V10636056	BPZ:GSD141.9A	**GSD141.9A**
AC 230	On-Off (2 wire SPDT)	30	No	A6V10636056	BPZ:GSD341.9A	**GSD341.9A**
AC/DC 24	2-position/3-position	150	No	A6V10636203	S55499-D204	**GLB141.9E**
AC 230	2-position/3-position	150	No	A6V10636203	S55499-D205	**GLB341.9E**
AC 24 DC 24	2-position	Open:30 Close:15	Yes	N4659	BPZ:GQD121.9A	**GQD121.9A**
AC 230 DC 24	2-position	Open:30 Close:15	Yes	N4659	BPZ:GQD321.9A	**GQD321.9A**
AC 24 DC 24	2-position	Open:90 Close:15	Yes	N4658	BPZ:GMA121.9E	**GMA121.9E**
AC 230 DC 24	2-position	Open:90 Close:15	Yes	N4658	BPZ:GMA321.9E	**GMA321.9E**

VBG60..

3-port changeover ball valves, externally threaded, PN40

For use in heating, ventilating and air conditioning plants as changeover ball valve. For closed circuits.

- Brass CW602N (DZR) ball valve body
- Flat sealing connections with external thread G..B to ISO 228-1
- Applications with auxiliary functions (e.g., switch, potentiometer) can also be combined with standard rotary actuators belonging to the DAC range

Data sheet	N4214
Leakage rate	„Waterproof“ as per EN 60534-4 L/1, better than class 4
Leakage rate bypass	< 1 % of k_{vs} value
Medium	Water Chilled water Cooling water Low-temperature hot water High-temperature hot water Water with anti-freeze
Medium temperature	-10...120 °C
Permissible operating pressure	1600 kPa
Material, valve body	Brass CW602N (DZR)
Material, inside set	Dezincification resistant hot-pressed brass (DZR), CW602N, chromium-plated
PN class	PN 40
Warranty	60 Months

Range overview VBG60..

Con-nect. thread	GDB..9E Δp_{max} [kPa]	GQD../ GSD..9A Δp_{max} [kPa]	GMA../ GLB..9E Δp_{max} [kPa]	DN	k_{vs} [m³/h]	Stock no.	Product no.
G 1"	350	350	350	15	8	S55230-V136	**VBG60.15-8T**
G 1¼"	350	350	350	20	13	S55230-V137	**VBG60.20-13T**
G 1½"	350	350	350	25	13	S55230-V138	**VBG60.25-13T**
G 2"			350	32	25	S55230-V139	**VBG60.32-25T**
G 2¼"			350	40	49	S55230-V140	**VBG60.40-49T**
G 2¾"			350	50	73	S55230-V141	**VBG60.50-73T**

3-port changeover ball valves, PN 40

VBG60..L

For use in heating, ventilating and air conditioning plants as changeover ball valve. For closed circuits.
- Brass CW602N (DZR) ball valve body
- Flat sealing connections with external thread G..B to ISO 228-1
- Applications with auxiliary functions (e.g., switch, potentiometer) can also be combined with standard rotary actuators belonging to the DAC range

Data sheet	A6V11974394
Angular rotation	90°
Leakage rate	„Waterproof" as per EN 60534-4 L/1, better than class 4
Leakage rate bypass	1 % of kvs
Medium	Water Chilled water Cooling water Low-temperature hot water High-temperature hot water Water with anti-freeze
Medium temperature	-10...120 °C
Permissible operating pressure	1600 kPa
Material, valve body	Brass CW602N (DZR)
Material, inside set	Dezincification resistant hot-pressed brass (DZR), CW602N, chromium-plated
PN class	PN 40
Warranty	60 Months

Range overview VBG60..L

Con-nect. thread	GDB..9E Δp_{max} [kPa]	GQD../ GSD..9A Δp_{max} [kPa]	GMA../ GLB..9E Δp_{max} [kPa]	DN	k_{vs} [m³/h]	Stock no.	Product no.
G 1"	350	350	350	15	5	S55230-V215	**VBG60.15-5L**
G 1¼" B	350	350	350	20	8	S55230-V202	**VBG60.20-8L**
G 1½"	350	350	350	25	9	S55230-V216	**VBG60.25-9L**
G 2"			350	32	13	S55230-V217	**VBG60.32-13L**
G 2¼"			350	40	25	S55230-V218	**VBG60.40-25L**
G 2¾"			350	50	37	S55230-V219	**VBG60.50-37L**

Accessories for VBG60..T/..L

Product Title	Data sheet	Stock no.	Product no.
Temperature Adapter		S55846-Z115	**ALJ100**
Mounting kit for rotary actuators GMA..1E with spring-return		BPZ:ASK77.2	**ASK77.2**
Mounting kit for rotary actuators GDB..1E, GLB..1E, GDD..1E and GLD..1E without spring-return		BPZ:ASK77.3	**ASK77.3**
Mounting kits for rotary actuators with or without spring-return, for special types with switches or potentiometer		S55845-Z199	**ASK77.5**
Malleable cast iron fitting G 1" / Rp ½", set of 3	N4463	BPZ:ALG153	**ALG153**
Brass fitting G 1" / Rp ½", 100 °C, set of 3	N4463	S55846-Z101	**ALG153B**
Malleable cast iron fitting G 1¼" / Rp ¾", set of 3	N4463	BPZ:ALG203	**ALG203**
Brass fitting G 1¼" / Rp ¾", 100 °C, set of 3	N4463	S55846-Z103	**ALG203B**
Malleable cast iron fitting G 1½" / Rp 1", set of 3	N4463	BPZ:ALG253	**ALG253**
Brass fitting G 1½" / Rp 1", 100 °C, set of 3	N4463	S55846-Z105	**ALG253B**
Malleable cast iron fitting G 2" / Rp 1¼", set of 3	N4463	BPZ:ALG323	**ALG323**
Brass fitting G 2" / Rp 1¼", 100 °C, set of 3	N4463	S55846-Z107	**ALG323B**
Malleable cast iron fitting G 2¼" / Rp 1½", set of 3	N4463	BPZ:ALG403	**ALG403**

Accessories for VBG60..T/..L

Product Title	Data sheet	Stock no.	Product no.
Brass fitting G 2¼" / Rp 1½", 100 °C, set of 3	N4463	S55846-Z109	**ALG403B**
Malleable cast iron fitting G 2¾" / Rp 2", set of 3	N4463	BPZ:ALG503	**ALG503**
Brass fitting G 2 ¾" / Rp 2", 100 °C, set of 3	N4463	S55846-Z111	**ALG503B**

Combinable actuator for VBG60..T/..L

Operating voltage [V]	Positioning signal	Positioning time [s]	Spring return function	Data sheet	Stock no.	Product no.
AC/DC 24	On-Off (2 wire SPDT)	30	No	A6V10636056	BPZ:GSD141.9A	**GSD141.9A**
AC 230	On-Off (2 wire SPDT)	30	No	A6V10636056	BPZ:GSD341.9A	**GSD341.9A**
AC/DC 24	2-position/3-position	150	No	A6V10636203	S55499-D204	**GLB141.9E**
AC 230	2-position/3-position	150	No	A6V10636203	S55499-D205	**GLB341.9E**
AC 24 DC 24	2-position	Open:30 Close:15	Yes	N4659	BPZ:GQD121.9A	**GQD121.9A**
AC 230 DC 24	2-position	Open:30 Close:15	Yes	N4659	BPZ:GQD321.9A	**GQD321.9A**
AC 24 DC 24	2-position	Open:90 Close:15	Yes	N4658	BPZ:GMA121.9E	**GMA121.9E**
AC 230 DC 24	2-position	Open:90 Close:15	Yes	N4658	BPZ:GMA321.9E	**GMA321.9E**

2-port Ball valve, internal thread, PN25

VAI51..

Internally threaded connections Rp.. as per ISO7-1. For use in heating, ventilation, and air conditioning plants as a control valve. For close circuits.

Data sheet	A6V12170194
Angular rotation	90°
Leakage rate	<0.01 % of Kvs value
Medium temperature	-10...120 °C
Valve characteristic	Equal percentage
Permissible operating pressure	2500KPa
Material, valve body	Brass
PN class	PN 25
Warranty	60 Months

Range overview VAI51..

For customers in Asia / Australia

Connect. thread	GQD.. / GSD.. 9A Δp_{max} [kPa]	GQD.. / GSD.. 9A Δp_s [kPa]	GDB.. 9E Δp_{max} [kPa]	GDB.. 9E Δp_s [kPa]	GMA. ./ GLB.. 9E Δp_{max} [kPa]	GMA. .9E Δp_{max} [kPa]	GMA. ./GLB. .9E Δp_s [kPa]	GMA. .9E Δp_s [kPa]	GLB.. 9E Δp_{max} [kPa]	GLB.. 9E Δp_s [kPa]	GLD.. 9E Δp_{max} [kPa]	GLD.. 9E Δp_s [kPa]	DN	k_{vs} [m³/h]	Stock no.	Product no.
Rp ½"	350	1400	350	1400	350		1400		350	1400	350	1400	15	4	S55230-V203	**VAI51.15-4**
Rp ½"	350	1400	350	1400	350		1400		350	1400	350	1400	15	6.3	S55230-V204	**VAI51.15-6.3**
Rp ¾"	350	1400	350	1400	350		1400		350	1400	350	1400	20	10	S55230-V206	**VAI51.20-10**
Rp ¾"	350	1400	350	1400	350		1400		350	1400	350	1400	20	6.3	S55230-V205	**VAI51.20-6.3**
Rp 1"	350	600	350	1400	350		1400		350	1400	350	1400	25	10	S55230-V207	**VAI51.25-10**
Rp 1"	350	600	350	1400	350		1400		350	1400	350	1400	25	16	S55230-V208	**VAI51.25-16**
Rp 1¼"					350		1000		350	1000	350	1000	32	16	S55230-V209	**VAI51.32-16**
Rp 1¼"					350		1000		350	1000	350	1000	32	25	S55230-V210	**VAI51.32-25**
Rp 1½"					350		800		350	800	350	800	40	25	S55230-V211	**VAI51.40-25**
Rp 1½"					350		800		350	800	350	800	40	40	S55230-V212	**VAI51.40-40**
Rp 2"						350		400	350	600	350	400	50	40	S55230-V213	**VAI51.50-40**
Rp 2"						350		400	350	600	350	400	50	63	S55230-V214	**VAI51.50-63**

Accessories for VAI51..

Product Title	Data sheet	Stock no.	Product no.
Mounting kit for rotary actuators GMA..1E with spring-return		BPZ:ASK77.2	**ASK77.2**
Mounting kit for rotary actuators GDB..1E, GLB..1E, GDD..1E and GLD..1E without spring-return		BPZ:ASK77.3	**ASK77.3**
Mounting kits for rotary actuators with or without spring-return, for special types with switches or potentiometer		S55845-Z199	**ASK77.5**

Combinable actuator for VAI51..

Operating voltage [V]	Positioning signal	Positioning time [s]	Spring return function	Data sheet	Stock no.	Product no.
AC/DC 24	DC 0/2..10 V	30	No	A6V10636056	S55499-D232	**GSD161.9A**
AC/DC 24	2-position/3-position	150	No	A6V10636150_enAP	S55499-D383	**GDB141.9E**
AC/DC 24	DC 0/2...10 V	150	No	A6V10636150_enAP	S55499-D397	**GDB161.9E**

Combinable actuator for VAI51..

Operating voltage [V]	Positioning signal	Positioning time [s]	Spring return function	Data sheet	Stock no.	Product no.
AC 230	2-position/3-position	150	No	A6V10636150_enAP	S55499-D384	**GDB341.9E**
AC 24 DC 24	DC 0/2...10 V	30	No	A6V11171770	S55499-D278	**GLD161.9E**
AC/DC 24	2-position/3-position	150	No	A6V10636203_enAP	S55499-D391	**GLB141.9E**
AC/DC 24	DC 0/2...10 V	150	No	A6V10636203_enAP	S55499-D402	**GLB161.9E**
AC 230	2-position/3-position	150	No	A6V10636203_enAP	S55499-D392	**GLB341.9E**
AC 24 DC 24	3-position	Open:30 Close:15	Yes	N4659	BPZ:GQD131.9A	**GQD131.9A**
AC 24 DC 24	DC 0...10 V	Open:30 Close:15	Yes	N4659	BPZ:GQD161.9A	**GQD161.9A**
AC 24 DC 24	3-position	Open:90 Close:15	Yes	N4658	BPZ:GMA131.9E	**GMA131.9E**
AC 24 DC 24	DC 0...10 V	Open:90 Close:15	Yes	N4658	BPZ:GMA161.9E	**GMA161.9E**

2-Port control ball valve and actuator combination, PN16 AC 24 V

M..B..

Internally threaded connections Rp.. as per ISO 7-1. For use in heating, ventilating and air conditioning plants as a control valve. For closed circuits.

Data sheet	A6V12170259
PN class	PN 16
Operating voltage	AC/DC 24 V
Positioning signal	DC 0/2..10 V
Positioning time	150 s
Position feedback	DC 0/2..10 V
Degree of protection	IP54
Permissible operating pressure	1600 kPa
Leakage rate	<0.01 % of Kvs value
Medium temperature	0...120 °C
Valve characteristic	Equal percentage
Material, valve body	Brass
Material, inside set	Stainless steel/PTFE+Graphite
Warranty	60 Months

Range overview M..B..

For customers in Asia / Australia

Δp_{max} [kPa]	Δp_s [kPa]	Con-nect. thread	k_{vs} [m³/h]	DN	Stock no.	Product no.
350	1400	Rp ½"	6.3	15	S55310-M113	**MDB461.15-6.3AI**
350	1400	Rp ¾"	10	20	S55310-M114	**MDB461.20-10AI**
350	1400	Rp 1"	16	25	S55310-M115	**MDB461.25-16AI**
350	1000	Rp 1¼"	25	32	S55310-M116	**MLB461.32-25AI**
350	800	Rp 1½"	40	40	S55310-M117	**MLB461.40-40AI**
350	600	Rp 2"	63	50	S55310-M118	**MLB461.50-63AI**

VBF21..

3-port slipper valves PN 6 with flanged connections

- With flanged connections to ISO 7005
- For chilled or low-temperature hot water in closed circuits

VBF21.40 / VBF21.50 are shipped with manual adjuster.
VBF21.., DN40/50, with SQK34.., SQK84..: Direct mounting
VBF21.., DN40/50, with SQK33.00 requires mounting set ASK32

Data sheet	N4241
Medium temperature	1...120 °C
Valve characteristic	Linear
Permissible operating pressure	600 kPa
Material, valve body	Cast iron EN-GJL-250
Material, inside set	< DN 100: CrNi steel/brass > DN 125: CrNi steel/Rg5
PN class	PN 6
Leakage rate	DN40...100: 0...0.1 % of k_{vs} value DN125...150: 0...0,5 % of k_{vs} value
Warranty	60 Months

Range overview VBF21..

SAL..T10 Δp_{max} [kPa]	DN	k_{vs} [m³/h]	Required mounting set	Stock no.	Product no.
30	40	25	ASK32N	BPZ:VBF21.40	**VBF21.40**
30	50	40	ASK32N	BPZ:VBF21.50	**VBF21.50**
30	65	63	ASK31N	BPZ:VBF21.65	**VBF21.65**
30	80	100	ASK31N	BPZ:VBF21.80	**VBF21.80**
30	100	160	ASK31N	BPZ:VBF21.100	**VBF21.100**
30	125	550	ASK31N	BPZ:VBF21.125	**VBF21.125**
30	150	820	ASK31N	BPZ:VBF21.150	**VBF21.150**

DN40...50, series 02
DN65...150, series 01

Accessories for VBF21..

Product Title	Data sheet	Stock no.	Product no.
Mounting set for SAL..T10 onto VBF21.., DN65..150 with ASK31N	N4502	S55845-Z100	**ASK31N**
Mounting set for SAL..T10 onto VBF21.., DN40..50 with ASK32N	N4502	S55845-Z211	**ASK32N**

Combinable actuator for VBF21..

Operating voltage [V]	Positioning signal	Positioning time [s]	Spring return function	Data sheet	Stock no.	Product no.
AC 230	3-position	120		N4502	S55162-A108	**SAL31.00T10**
AC 230	3-position	30		N4502	S55162-A109	**SAL31.03T10**
AC/DC 24	DC 0...10 V DC 4...20 mA 0...1000 Ohm	120		N4502	S55162-A100	**SAL61.00T10**
AC/DC 24	DC 0...10 V DC 4...20 mA 0...1000 Ohm	30		N4502	S55162-A101	**SAL61.03T10**
AC/DC 24	3-position	120		N4502	S55162-A104	**SAL81.00T10**
AC/DC 24	3-position	30		N4502	S55162-A105	**SAL81.03T10**

Butterfly valves PN16 for flanged connections, with tight shutoff

VKF42..

Butterfly valve is used as motorized or shut-off valves in heating, ventilation and air conditioning systems applications.
- In open and closed circuits
- For 2-position (SPDT) or DC 0...10 V control signals
- For chiller and cooling tower sequencing circuits
- To open or close the flow to a heat exchanger or to complete plant sections

Data sheet	N4119
Angular rotation	90°
Leakage rate	A to ISO 5208 (tight-closing)
Medium	Water Water with anti-freeze
Medium temperature	-10...80 °C
Valve characteristic	Non-linear
Material, valve body	Cast iron
Material, inside set	Stainless steel Nodular cast iron EN-GJS-450-10 (QT450-10) Nylon coating
PN class	PN 16
Mounting position	Upright to horizontal
Required mounting set	Direct
Warranty	60 Months

Range overview VKF42..

SQL..B50 Δp_s [kPa]	SQL..B150 Δp_s [kPa]	SQL..B270 Δp_s [kPa]	SQL..B570 Δp_s [kPa]	SQL..B1400 Δp_s [kPa]	SQL..B2650 Δp_s [kPa]	DN	k_{vs} [m³/h]	Stock no.	Product no.
						50	65	S55237-V100	**VKF42.50**
						65	140	S55237-V101	**VKF42.65**
						80	210	S55237-V102	**VKF42.80**
700						100	470	S55237-V103	**VKF42.100**
700						125	750	S55237-V104	**VKF42.125**
700						150	1250	S55237-V105	**VKF42.150**
	700					200	3100	S55237-V106	**VKF42.200**
		700				250	4050	S55237-V107	**VKF42.250**
		700				300	7500	S55237-V108	**VKF42.300**
			700			350	10250	S55237-V109	**VKF42.350**
			700			400	14100	S55237-V110	**VKF42.400**
				700		450	18500	S55237-V111	**VKF42.450**
				700		500	24000	S55237-V112	**VKF42.500**
					700	600	37000	S55237-V113	**VKF42.600**

Combinable actuator for VKF42..

Operating voltage [V]	Positioning signal	Positioning time [s]	Spring return function	Data sheet	Stock no.	Product no.
AC 220	2-position (SPDT)	11	No	N4520	S55164-A100	**SQL321B25**
AC 220	2-position (SPDT)	19	No	N4520	S55164-A101	**SQL321B50**
AC 220	DC 0...10 V	19	No	N4520	S55164-A102	**SQL361B50**
AC 220	2-position (SPDT)	39	No	N4520	S55164-A103	**SQL321B150**
AC 220	DC 0...10 V	39	No	N4520	S55164-A104	**SQL361B150**
AC 220	2-position (SPDT)	39	No	N4520	S55164-A105	**SQL321B270**
AC 220	DC 0...10 V	39	No	N4520	S55164-A106	**SQL361B270**
AC 220	2-position (SPDT)	47	No	N4520	S55164-A107	**SQL321B570**
AC 220	DC 0...10 V	47	No	N4520	S55164-A108	**SQL361B570**
AC 220	2-position (SPDT)	47	No	N4520	S55164-A109	**SQL321B1400**

Combinable actuator for VKF42..

Operating voltage [V]	Positioning signal	Positioning time [s]	Spring return function	Data sheet	Stock no.	Product no.
AC 220	DC 0...10 V	47	No	N4520	S55164-A110	**SQL361B1400**
AC 220	2-position (SPDT)	105	No	N4520	S55164-A111	**SQL321B2650**
AC 220	DC 0...10 V	105	No	N4520	S55164-A112	**SQL361B2650**

Accessories for VKF..

Product Title	Data sheet	Stock no.	Product no.
Buttefly valve mounting set DN80, DN100	N4119	S55845-Z153	**ASK77.10**
Buttefly valve mounting set DN125, DN150	N4119	S55845-Z154	**ASK77.11**
Ball valve mounting set, DN 65, DN 80, DN 100, DN 125	A6V11168935	S55845-Z203	**ASK77.21**
Buttefly valve mounting set DN50, DN65	N4119	S55845-Z152	**ASK77.9**
Ball valve mounting set, DN 150	A6V11168935	S55845-Z204	**ASK77.22**

Butterfly Valve, flange, PN 6/10/16, tight closing

VFW41..

Wafer type butterfly valve for fitting between PN 6, PN 10, PN 16 counter-flanges to ISO 7005. For use as motorized or manual control or shut-off valves in heating, ventilation and air conditioning systems.
In open and closed circuits, tight closing.

Data sheet	A6V101029242
Angular rotation	90°
Leakage rate	Tight closing
Medium	Water Water with anti-freeze
Medium temperature	–20...120 °C
Permissible operating pressure	1600 kPa
Material, valve body	Cast iron EN-GJS-400-18-LT
Material, inside set	Stainless steel valve disc and shaft
PN class	PN 16
Warranty	60 Months

Range overview VFW41..

SAL..T20 Δp_s [kPa]	SAL..T40 Δp_s [kPa]	DN	k_{vs} [m³/h]	Stock no.	Product no.
1600		40	40	S55235-V138	**VFW41.40**
1600		50	100	S55235-V139	**VFW41.50**
1600		65	155	S55235-V140	**VFW41.65**
	1600	80	260	S55235-V141	**VFW41.80**
	1200	100	520	S55235-V142	**VFW41.100**
	800	125	820	S55235-V143	**VFW41.125**
		150	1600	S55235-V144	**VFW41.150**
		200	4000	S55235-V145	**VFW41.200**
		250	4550	S55235-V146	**VFW41.250**
		300	7200	S55235-V147	**VFW41.300**
		350	10250	S55235-V148	**VFW41.350**
		400	14100	S55235-V160	**VFW41.400**
		450	18500	S55235-V161	**VFW41.450**
		500	24000	S55235-V162	**VFW41.500**
		600	31000	S55235-V163	**VFW41.600**

Combinable actuators for VFW41..

Operating voltage [V]	Positioning signal	Positioning time [s]	Spring return function	Data sheet	Stock no.	Product no.
AC 230			No	A6V13343014	S55162-A126	SQL341E100
AC 230			No	A6V13343014	S55162-A128	SQL341E1200
AC 230			No	A6V13343014	S55162-A124	SQL341E25
AC 230			No	A6V13343014	S55162-A125	SQL341E40
AC 230			No	A6V13343014	S55162-A127	SQL341E400
AC 230			No	A6V13343014	S55162-A131	SQL361E100
AC 230			No	A6V13343014	S55162-A133	SQL361E1200
AC 230			No	A6V13343014	S55162-A129	SQL361E25
AC 230			No	A6V13343014	S55162-A130	SQL361E40
AC 230			No	A6V13343014	S55162-A132	SQL361E400
AC 230	3-position	12		N4505	BPZ:SQL36E110	**SQL36E110**
AC 230	3-position	120		N4502	S55162-A110	**SAL31.00T20**
AC 230	3-position	120		N4502	S55162-A111	**SAL31.00T40**

Combinable actuators for VFW41..

Operating voltage [V]	Positioning signal	Positioning time [s]	Spring return function	Data sheet	Stock no.	Product no.
AC/DC 24	DC 0...10 V DC 4...20 mA 0...1000 Ohm	120		N4502	S55162-A102	**SAL61.00T20**
AC/DC 24	DC 0...10 V DC 4...20 mA 0...1000 Ohm	120		N4502	S55162-A103	**SAL61.00T40**
AC/DC 24	3-position	120		N4502	S55162-A106	**SAL81.00T20**
AC/DC 24	3-position	120		N4502	S55162-A107	**SAL81.00T40**
AC 230	3-position	25		N4505	BPZ:SQL36E50F04	**SQL36E50F04**
AC 230	3-position	25		N4505	BPZ:SQL36E50F05	**SQL36E50F05**
AC 230	3-position	6		N4505	BPZ:SQL36E65	**SQL36E65**
AC 230	3-position	24		N4505	BPZ:SQL36E160	**SQL36E160**

Manual adjuster for VFW41..

Product Title	Data sheet	Stock no.	Product no.
Manual override for VFW41../VFL41.., DN40 to DN65	A6V12436917	S55845-Z254	**ASK41NF04SP**
Manual override for VFW41../VFL41.., DN80 to DN125	A6V12436917	S55845-Z255	**ASK41NF05SP**
Manual override for VFW41../VFL41.., DN150 to DN200	A6V12436917	S55845-Z256	**ASK41NF07SP**
Manual override for VFW41../VFL41.., DN250 to DN400	A6V12436917	S55845-Z257	**ASK41NF10SP**

Butterfly Valves PN6/10/16 VFW41..U

VFW41..U

Nodular cast iron housing EN-GJS-400-18-LT
DN 40...200
Kvs 40...4000 m3/h
For fitting between PN 6, PN 10, PN 16 counter-flanges to ISO 7005
Angle of rotation 90°
No maintenance required
Can be fitted with type SAL..T10/F05 electromotoric actuators

Data sheet	A6V101029254
Angular rotation	90°
Leakage rate	0.05 % of kvs
Medium	Water Water with anti-freeze Chilled water Low-temperature hot water High-temperature hot water Brine
Medium temperature	–20...120 °C
Valve characteristic	non-linear
Permissible operating pressure	1600 kPa
Material, valve body	Cast iron EN-GJS-400-18-LT
Material, inside set	Cast iron EN-GJS-400-18-LT
PN class	PN 6 PN 10 PN 16
Warranty	60 Months

Range overview VFW41..U

SAL..T10 Δp_s [kPa]	DN	k_{vs} [m³/h]	Stock no.	Product no.
500	40	40	S55235-V168	**VFW41.40U**
500	50	100	S55235-V169	**VFW41.50U**
500	65	155	S55235-V170	**VFW41.65U**
500	80	260	S55235-V171	**VFW41.80U**
500	100	520	S55235-V172	**VFW41.100U**
300	125	820	S55235-V173	**VFW41.125U**
250	150	1600	S55235-V174	**VFW41.150U**
125	200	4000	S55235-V175	**VFW41.200U**

Combinable actuators for VFW41..U

Operating voltage [V]	Positioning signal	Positioning time [s]	Spring return function	Data sheet	Stock no.	Product no.
AC 230	3-position	30	No	N4502	S55162-A121	**SAL31.03T10/F05**
AC/DC 24	DC 0...10 V DC 4...20 mA 0...1000 Ohm	30	No	N4502	S55162-A123	**SAL61.03T10/F05**
AC/DC 24	3-position	30	No	N4502	S55162-A122	**SAL81.03T10/F05**

VFL41..

Butterfly Valve, flange, PN 10/16, tight closing

Lug type butterfly valves PN 6, PN 10, PN 16. For use as motorized or manual control or shut-off valves in heating, ventilation and air conditioning systems. In open and closed circuits, tight closing.

Data sheet	A6V101029242
Angular rotation	90°
Leakage rate	Tight shutoff, EN 12266-1, leakage rate A
Medium	Water Water with anti-freeze
Medium temperature	-20...120 °C
Permissible operating pressure	1600 kPa
Material, valve body	Cast iron EN-GJS-400-18-LT
Material, inside set	Stainless steel valve disc and shaft
PN class	PN 16
Warranty	60 Months

Range overview VFL41..

SAL..T20 Δp_s [kPa]	SAL..T40 Δp_s [kPa]	DN	k_{vs} [m³/h]	Stock no.	Product no.
1600		40	40	S55235-V149	**VFL41.40**
1600		50	100	S55235-V150	**VFL41.50**
1600		65	155	S55235-V151	**VFL41.65**
	1600	80	260	S55235-V152	**VFL41.80**
	1200	100	520	S55235-V153	**VFL41.100**
	800	125	820	S55235-V154	**VFL41.125**
		150	1600	S55235-V155	**VFL41.150**
		200	4000	S55235-V156	**VFL41.200**
		250	4550	S55235-V157	**VFL41.250**
		300	7200	S55235-V158	**VFL41.300**
		350	10250	S55235-V159	**VFL41.350**
		400	14100	S55235-V164	**VFL41.400**
		450	18500	S55235-V165	**VFL41.450**
		500	24000	S55235-V166	**VFL41.500**
		600	31000	S55235-V167	**VFL41.600**

Combinable actuators for VFL41..

Operating voltage [V]	Positioning signal	Positioning time [s]	Spring return function	Data sheet	Stock no.	Product no.
AC 230			No	A6V13343014	S55162-A126	**SQL341E100**
AC 230			No	A6V13343014	S55162-A128	**SQL341E1200**
AC 230			No	A6V13343014	S55162-A124	**SQL341E25**
AC 230			No	A6V13343014	S55162-A125	**SQL341E40**
AC 230			No	A6V13343014	S55162-A127	**SQL341E400**
AC 230			No	A6V13343014	S55162-A131	**SQL361E100**
AC 230			No	A6V13343014	S55162-A133	**SQL361E1200**
AC 230			No	A6V13343014	S55162-A129	**SQL361E25**
AC 230			No	A6V13343014	S55162-A130	**SQL361E40**
AC 230			No	A6V13343014	S55162-A132	**SQL361E400**
AC 230	3-position	12		N4505	BPZ:SQL36E110	**SQL36E110**
AC 230	3-position	120		N4502	S55162-A110	**SAL31.00T20**
AC 230	3-position	120		N4502	S55162-A111	**SAL31.00T40**
AC/DC 24	DC 0...10 V DC 4...20 mA 0...1000 Ohm	120		N4502	S55162-A102	**SAL61.00T20**

Combinable actuators for VFL41..

Operating voltage [V]	Positioning signal	Positioning time [s]	Spring return function	Data sheet	Stock no.	Product no.
AC/DC 24	DC 0...10 V DC 4...20 mA 0...1000 Ohm	120		N4502	S55162-A103	**SAL61.00T40**
AC/DC 24	3-position	120		N4502	S55162-A106	**SAL81.00T20**
AC/DC 24	3-position	120		N4502	S55162-A107	**SAL81.00T40**
AC 230	3-position	25		N4505	BPZ:SQL36E50F04	**SQL36E50F04**
AC 230	3-position	25		N4505	BPZ:SQL36E50F05	**SQL36E50F05**
AC 230	3-position	6		N4505	BPZ:SQL36E65	**SQL36E65**
AC 230	3-position	24		N4505	BPZ:SQL36E160	**SQL36E160**

Manual adjuster for VFL41..

Product Title	Data sheet	Stock no.	Product no.
Manual override for VFW41../VFL41.., DN40 to DN65	A6V12436917	S55845-Z254	**ASK41NF04SP**
Manual override for VFW41../VFL41.., DN80 to DN125	A6V12436917	S55845-Z255	**ASK41NF05SP**
Manual override for VFW41../VFL41.., DN150 to DN200	A6V12436917	S55845-Z256	**ASK41NF07SP**
Manual override for VFW41../VFL41.., DN250 to DN400	A6V12436917	S55845-Z257	**ASK41NF10SP**

MVI422..

2-port zone valves & actuators, PN16

Control valve for use with terminal units for heating and colling zones. The actuators are equipped with a manual lever and spring return facility (valve closed).

Data sheet	A6V11932500
PN class	PN 16
Operating voltage	AC 230 V
Power consumption	6.5 VA
Positioning signal	2-position
Positioning time	Opening 15 s (motor-driven)
	Closing 10 s (spring force)
Degree of protection	IP40
Ambient temperature, operation	-10...55 °C
Mounting position	Upright up to 85 °C inclined
Permissible operating pressure	1600 kPa
Leakage rate	Tight shut-off (100 % airtight)
Medium temperature	1...95 °C
Material, inside set	Stainless/NBR
Warranty	60 Months

Range overview MVI422..

For customers in Asia / Australia

Product Title	Δp_{max} [kPa]	Δp_s [kPa]	Stock no.	Product no.
2-port zone valves & actuators, PN16	350	350	S55310-M107	**MVI422.15**
2-port zone valves & actuators, PN16	350	350	S55310-M108	**MVI422.20**
2-port zone valves & actuators, PN16	350	350	S55310-M109	**MVI422.25**

MXI422..

3-port zone valves & actuators, PN16

Control valve for use with terminal units for heating and colling zones. The actuators are equipped with a manual lever and spring return facility (valve closed).

Data sheet	A6V11932500
PN class	PN 16
Operating voltage	AC 230 V
Power consumption	6.5 VA
Positioning signal	2-position
Positioning time	Opening 15 s (motor-driven)
	Closing 10 s (spring force)
Degree of protection	IP40
Ambient temperature, operation	-10...55 °C
Mounting position	Upright up to 85 °C inclined
Permissible operating pressure	1600 kPa
Leakage rate	Tight shut-off (100 % airtight)
Medium temperature	1...95 °C
Material, inside set	Stainless/NBR
Warranty	60 Months

Range overview MXI422..

For customers in Asia / Australia

Product Title	Δp_{max} [kPa]	Δp_s [kPa]	Stock no.	Product no.
3-port zone valves & actuators, PN16	250	250	S55310-M110	**MXI422.15**
3-port zone valves & actuators, PN16	200	200	S55310-M111	**MXI422.20**
3-port zone valves & actuators, PN16	150	150	S55310-M112	**MXI422.25**

Accessories for MVI422.. /MXI422..

Product Title	Data sheet	Stock no.	Product no.
Waterproof shield for ASK 39.3		S55845-Z251	**ASK39.3**

8

MVL661..-..

Modulating refrigerant valves with magnetic actuator, PS45, hermetically sealed, for safety refrigerants

Hermetically sealed 2-port valves for modulating control of chillers and heat pumps.
- Expansion, hot-gas and suction throttle applications with one type of valve
- PS45, stainless steel with soldering connections
- Integrated power electronic with precise position feedback signal
- For safety refrigerants such as R22, R134a, R404A, R407C, R410A, R507, and R744 (CO2). Not suitable for inflammable refrigerants.

The MVL661..-.. refrigerant valve is used in conjunction with PolyCool for superheat control or Climatix for chiller control.
MVL661..-.. replaces M2FS..LX.., M2FE..L.. and MVL661.25.
MVL661..-.. are UL listed.
ASR61: Replacement electronics in the event of defective valve electronics.

Data sheet	N4714
Operating voltage	AC 24 V DC 20...30 V
Positioning signal	DC 0...10 V DC 2...10 V DC 0...20 mA DC 4...20 mA
Positioning time	< 1 s
Spring return function	A->AB closed
Position feedback	DC 0...10 V DC 2...10 V DC 0...20 mA DC 4...20 mA
Degree of protection	IP65
Ambient temperature, operation	-25...55 °C
Mounting position	Upright to horizontal
Permissible operating pressure	4500 kPa
Leakage rate	< 0.002 % of k_{vs} value
Medium temperature	-40...120 °C
Valve characteristic	Linear
Stroke resolution $\Delta H/H_{100}$	1:1000
Material, valve body	Steel / CrNi steel
Material, inside set	CrNi steel/brass
Warranty	60 Months

8

Range overview MVL661..

Δp_{max} [kPa]	k_{vs} [m³/h]	k_{vs} reduced [m³/h]	DN	Stock no.	Product no.
2500	0.4	0.25	15	BPZ:MVL661.15-0.4	**MVL661.15-0.4**
2500	1	0.63	15	BPZ:MVL661.15-1.0	**MVL661.15-1.0**
2500	2.5	1.6	20	BPZ:MVL661.20-2.5	**MVL661.20-2.5**
2500	6.3	4	25	BPZ:MVL661.25-6.3	**MVL661.25-6.3**
1600	10	6.3	32	S55320-M105	**MVL661.32-10**
200	12	8	32	BPZ:MVL661.32-12	**MVL661.32-12**

k_{vs}-reduced selectable with DIP switch.
MVL661.32-12 can only be used as a suction throttle valve.

Modulating refrigerant valves with magnetic actuator, PN 63, hermetically sealed

MVS661..N

Hermetically sealed 2-port valves for modulating control of refrigerant circuits including chillers and heat pumps.
- Expansion gas, flash gas and suction throttle applications with one type of valve
- PN 63, stainless steel with welding connections
- Integrated power electronic with precise position feedback signal
- For ammonia R717 and all standard refrigerants, noncorrosive gases/liquids and CO_2 (R744). It is not suited for use with inflammable refrigerants.

"An exchangeable ASR..N valve insert allows for different k_{vs}-values with the same type of DN25 valve. In the event of service, this insert can also be replaced on the plant.
MVS661..N are UL listed."

Data sheet	N4717
Operating voltage	AC 24 V DC 20...30 V
Power consumption	22 VA
Positioning signal	DC 0...10 V DC 2...10 V DC 0...20 mA DC 4...20 mA
Positioning time	<1 s
Spring return function	Closed
Position feedback	DC 0...10 V DC 2...10 V DC 0...20 mA DC 4...20 mA
Degree of protection	IP65
Ambient temperature, operation	-25...55 °C
Mounting position	Upright to horizontal
Permissible operating pressure	6300 kPa
Leakage rate	<0.002% of k_{vs}-value
Medium temperature	-40...120 °C
Valve characteristic	Linear
Stroke resolution $\Delta H/H_{100}$	1:1000
Material, valve body	Steel / CrNi steel
Material, inside set	CrNi steel
Warranty	60 Months

Range overview MVS661..N

Δp_{max} [kPa]	k_{vs} [m³/h]	k_{vs} reduced [m³/h]	DN	Stock no.	Product no.
2500	0.16	0.1	25	BPZ:MVS661.25-016N	**MVS661.25-016N**
2500	0.4	0.25	25	BPZ:MVS661.25-0.4N	**MVS661.25-0.4N**
2500	1	0.63	25	BPZ:MVS661.25-1.0N	**MVS661.25-1.0N**
2500	2.5	1.6	25	BPZ:MVS661.25-2.5N	**MVS661.25-2.5N**
2500	6.3	4	25	BPZ:MVS661.25-6.3N	**MVS661.25-6.3N**

k_{vs}-reduced selectable with DIP switch.

Accessories for MVL661..-../ MVS661..N

Product Title	Data sheet	Stock no.	Product no.
Valve insert, kvs 0.16 m³/h	N4716	BPZ:ASR0.16N	**ASR0.16N**
Valve insert, kvs 0.4 m³/h	N4716	BPZ:ASR0.4N	**ASR0.4N**
Valve insert, kvs 1 m³/h	N4716	BPZ:ASR1.0N	**ASR1.0N**
Valve insert, kvs 2.5 m³/h	N4716	BPZ:ASR2.5N	**ASR2.5N**
Valve insert, kvs 6.3 m³/h	N4716	BPZ:ASR6.3N	**ASR6.3N**

Accessories for MVL661..-../ MVS661..N

Product Title	Data sheet	Stock no.	Product no.
Replacement electronic for MVL661.. and MVS661..N	N4714	BPZ:ASR61	**ASR61**
Replacement electronic for MVL661..EX and MVS661..EX		S55320-M115	**ASR61EX**
PTC conductive heating element		S55845-Z241	**ASR70**

2-port modulating pilot valve with magnetic actuator, PN32, AC 24 V, DC 0...10 V / 4...20 mA / 0...20 Phs to control main valves

M2FP03GX

Hermetically sealed 2-port valve as a control valve for main valves from 2" to 5".
- PN32 with threaded connections
- For use with refrigerants such as R22, R134a, R404A, R407C, R507 and ammonia R717
- ZM electronics must be ordered separately (see below)

Data sheet	N4731
PN class	PN 32
Operating voltage	AC 24 V
Power consumption	13 VA
Positioning signal	DC 0...10 V DC 4...20 mA DC 0...20 V Phs
Positioning time	1 s
Spring return function	Closed
Degree of protection	IP54
Ambient temperature, operation	-40...50 °C
Mounting position	Any
Permissible operating pressure	3200 kPa
Leakage rate	0.25 % of kvs
Medium temperature	-40...100 °C; -40...212 °F
Valve characteristic	Linear
Stroke resolution $\Delta H/H_{100}$	1:200
Material, valve body	Steel
Material, inside set	CrNi steel
Δp_{max}	1800 kPa
Dimensions (W x H x D)	112 x 149 x 67.5 mm
k_{vs}	0.3 m³/h
Warranty	60 Months

	Stock no.	Product no.
	BPZ:M2FP03GX	**M2FP03GX**

With types ZM101/A and ZM121/A, the DC 0...20 V Phs positioning signal is also possible without operating voltage.

Matching ZM.. electronics

Product Title	Data sheet	Stock no.	Product no.
Terminal housing for control of valves with magnetic actuator, AC 24 V, DC 0...10 V / 0...20 V Phs	N4591	BPZ:ZM100/A	**ZM100/A**
Terminal housing for valves with magnetic actuator, AC 24 V, DC 0...10 V / 0...20 V Phs	N4591	BPZ:ZM101/A	**ZM101/A**
Terminal housing for control of valves with magnetic actuator, AC 24 V, DC 4...20 mA / 0...20 V Phs	N4591	BPZ:ZM120/A	**ZM120/A**
Terminal housing for valves with magnetic actuator, AC 24 V, DC 4...20 mA / 0...20 V Phs	N4591	BPZ:ZM121/A	**ZM121/A**
Terminal housing for control of valves with magnetic actuator, AC 24 V, DC 0...10 V / 0...20 V Phs	N4591	BPZ:ZM200/A	**ZM200/A**
Terminal housing for control of valves with magnetic actuator, AC 24 V, DC 4...20 mA / 0...20 V Phs	N4591	BPZ:ZM220/A	**ZM220/A**

M3FB..LX..

Modulating refrigerant valves with magnetic actuator, PS43, soldered connection, hermetically sealed

Hermetically sealed contol valves for modulating capacity control of refrigeration units and for heat recovery.

- PN40 with soldered CrNi steel connections
- For organic safety refrigerants such as R22, R134a, R404A, R407C, R410A, R507, etc. Not suitable for flammable refrigerants
- ZM electronics must be ordered separately (see accessories)

Modulating control valves for hot-gas control, without ZM.. electronics housing
For use with Staefa controllers (working range 4...8 V)

Data sheet	N4721
Operating voltage	AC 24 V
Positioning signal	DC 0...10 V DC 4...20 mA DC 0...20 V Phs
Positioning time	< 1 s
Spring return function	AB-> A closed
Degree of protection	IP54
Ambient temperature, operation	-40...50 °C
Mounting position	Any
Permissible operating pressure	4300 kPa
Leakage rate	< 0.05% of k_{vs}-value
Medium temperature	-40...120 °C
Valve characteristic	Linear
Stroke resolution $\Delta H/H_{100}$	1:200
Material, valve body	Steel
Material, inside set	CrNi steel/brass
Warranty	60 Months

Range overview M3FB..LX..

Power consumption [VA]	Δp_{max} [kPa]	k_{vs} [m³/h]	DN	Stock no.	Product no.
26	2200	0.6	15	BPZ:M3FB15LX06/A	**M3FB15LX06/A**
26	2200	1.5	15	BPZ:M3FB15LX15/A	**M3FB15LX15/A**
26	2200	3	15	BPZ:M3FB15LX/A	**M3FB15LX/A**
26	1800	5	20	BPZ:M3FB20LX/A	**M3FB20LX/A**
40	1200	8	25	BPZ:M3FB25LX/A	**M3FB25LX/A**
40	800	12	32	BPZ:M3FB32LX	**M3FB32LX**

Δp_{max} across control port AB -> A.

Matching ZM.. electronics

Product Title	Data sheet	Stock no.	Product no.
Terminal housing for valves with magnetic actuator, AC 24 V, DC 0...10 V / 0...20 V Phs	N4591	BPZ:ZM101/A	**ZM101/A**
Terminal housing for valves with magnetic actuator, AC 24 V, DC 4...20 mA / 0...20 V Phs	N4591	BPZ:ZM121/A	**ZM121/A**

Modulating refrigerant valves with magnetic actuator, PN32, solder connection, hermetically sealed

M3FK..LX..

Hermetically sealed mixing or straight-through valves for modulating capacity control of condensers.
- PN32 with copper soldering connection
- For safety refrigerants such as R22, R134a, R404A, R407C, R507, etc.
- ZM electronics must be ordered separately (see below)

For use with Staefa controllers (working range 4...8 V)

Data sheet	N4722
PN class	PN 32
Operating voltage	AC 24 V
Positioning signal	DC 0...10 V DC 4...20 mA DC 0...20 V Phs
Positioning time	< 1 s
Spring return function	1-> 3 closed
Degree of protection	IP54
Ambient temperature, operation	-40...50 °C
Mounting position	Any
Permissible operating pressure	3200 kPa
Leakage rate	< 0.05% of k_{vs}-value
Leakage rate bypass	< 0.5% of k_{vs}-value
Medium temperature	-40...120 °C
Valve characteristic	Linear
Stroke resolution $\Delta H/H_{100}$	1:200
Material, valve body	Steel
Material, inside set	CrNi steel/brass
Warranty	60 Months

Range overview M3FK..LX..

Power consumption [VA]	k_{vs} [m³/h]	DN	Stock no.	Product no.
13	0.6	15	BPZ:M3FK15LX06	**M3FK15LX06**
13	1.5	15	BPZ:M3FK15LX15	**M3FK15LX15**
13	3	15	BPZ:M3FK15LX	**M3FK15LX**
16	5	20	BPZ:M3FK20LX	**M3FK20LX**
16	8	25	BPZ:M3FK25LX	**M3FK25LX**
20	12	32	BPZ:M3FK32LX	**M3FK32LX**
40	20	40	BPZ:M3FK40LX	**M3FK40LX**
40	30	50	BPZ:M3FK50LX	**M3FK50LX**

With types ZM101/A and ZM121/A, the DC 0...20 V Phs positioning signal is also possible without operating voltage.

Matching ZM.. electronics

Product Title	Data sheet	Stock no.	Product no.
Terminal housing for valves with magnetic actuator, AC 24 V, DC 0...10 V / 0...20 V Phs	N4591	BPZ:ZM101/A	**ZM101/A**
Terminal housing for valves with magnetic actuator, AC 24 V, DC 4...20 mA / 0...20 V Phs	N4591	BPZ:ZM121/A	**ZM121/A**

Damper actuators

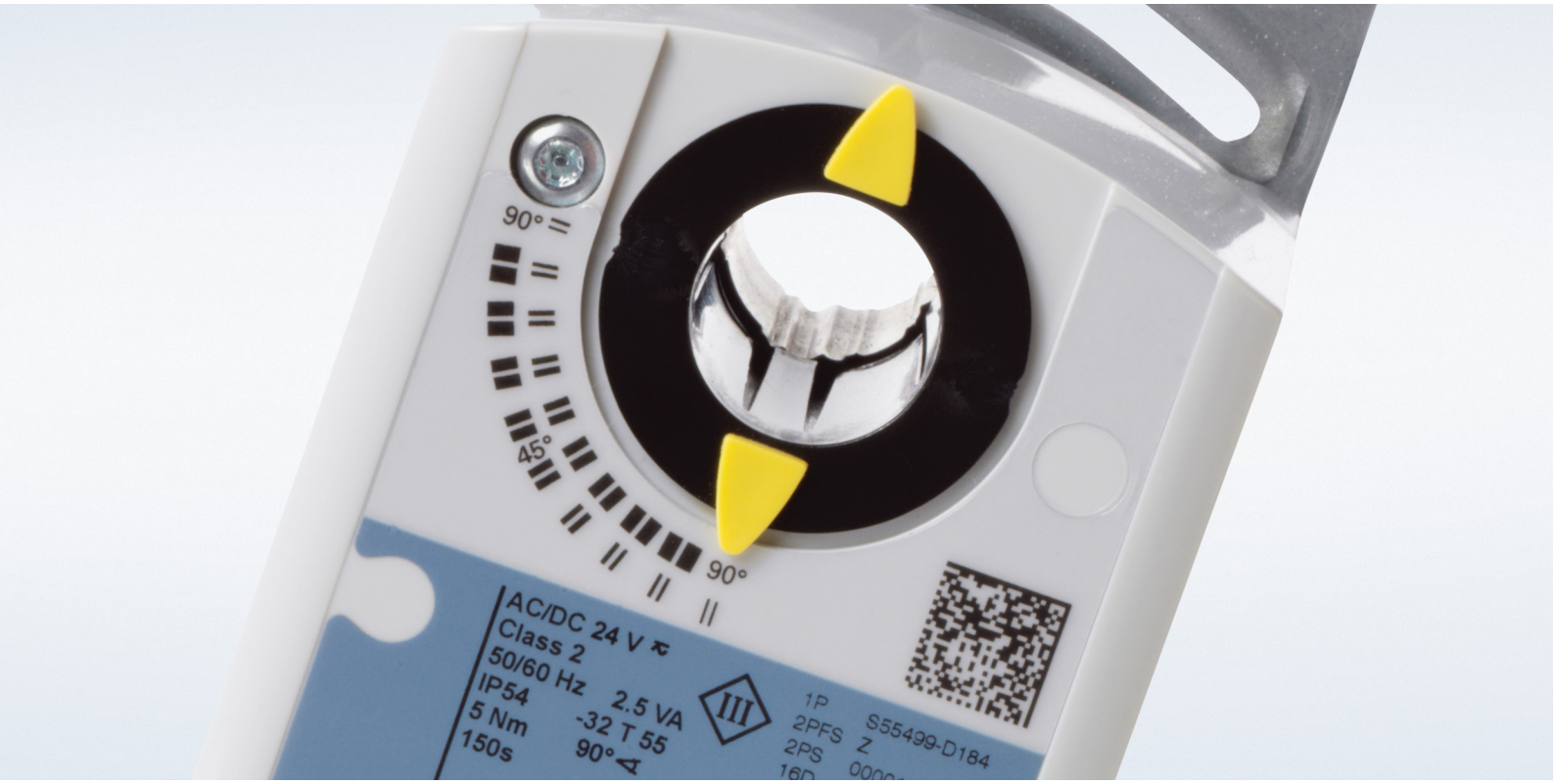

Overview and selection tools		632
Air damper actuators	Rotary damper actuators with spring return	642
	Rotary damper actuators with spring return for railway application	648
	Rotary damper actuators non-spring return	649
	Rotary damper actuators non-spring return for railway application	663
	Fast-running damper actuators with fail safe function	667
	Fast-running damper actuators fail-in-place	668
	Linear damper actuators	669
VAV controller	Compact room automation stations BACnet/IP DXR2.E..	671
	Compact room automation stations BACnet/MSTP DXR2.M..	674
	Compact room automation stations BACnet/IP DXR1.E..	675
	Compact room automation stations BACnet/MSTP DXR1.M..	678
	VAV compact controllers with KNX PL-Link communication	679
	VAV compact controllers with BACnet MS/TP communication	680
	VAV compact controllers with Modbus RTU communication	681
	VAV compact controllers	682
	VAV modular controllers	683
Actuators for fire and smoke protection dampers	Fire damper actuators	684

Networked air damper actuators

guarantee interoperability thanks to the standardized and open communication protocols.
As a result, the Networked air damper actuators can be installed in any system, even those made by different manufacturers.

Actuators for HVAC applications

Actuators for HVAC applications	Control signal	Operating voltage	Standard model	Dimensions, round damper shaft (mm)	Dimensions, square damper shaft (mm)
Air damper actuators with spring return					
GMA-series 7 Nm for approx. 1.5 m² damper area 90 s running time, 15 s SR time	Modbus RTU	AC/DC 24 V	GMA161.1E/MO	6,4...20,5	6,4...13
GCA-series 18 Nm for approx. 3 m² damper area 90 s running time, 15 s SR time	Modbus RTU	AC/DC 24 V	GCA161.1E/MO	8...25,6	6...18
Air damper actuators without spring return					
GDB-series 5 Nm for approx. 0.8 m² damper area 150 s running time	Modbus RTU	AC 24 V	GDB111.1E/MO	8...16	6...12,8
	KNX S-/ LTE-Mode, KNX PL-Link	AC 24 V	GDB111.1E/KN		
GLB-series 10 Nm for approx. 1.5 m² damper area 150 s running time	Modbus RTU	AC 24 V	GLB111.1E/MO	8...16	6...12,8
	KNX S-/LTE-Mode, KNX PL-Link	AC 24 V	GLB111.1E/KN		
GEB-series 20 Nm for approx. 4 m² damper area 150 s running time	Modbus RTU	AC 24 V	GEB161.1E/MO	8...20,5	8...14,5
GIB-series 35 Nm for approx. 6 m² damper area 150 s running time	Modbus RTU	AC 24 V	GIB161.1E/MO	8...25,6	6...18

9

5-year warranty on valves and actuators, damper actuators and sensors.

Actuators for HVAC applications with spring return

Actuators for HVAC applications	Control signal	Operating voltage	Standard model	Adjustable offset/span	Adjustable offset/span with two auxiliary switches	Feedback (1 kOhm) with two auxiliary switches	Two auxiliary switches	Dimensions, round damper shaft (mm)	Dimensions, square damper shaft (mm)
GQD series 2 Nm for approx. 0.3 m² damper area 30 s run time 15 s SR time	2-position	AC/DC 24 V	GQD121.1A	–	–	–	GQD126.1A	8...15	6...11
		AC 230 V	GQD321.1A	–	–	–	GQD326.1A		
	3-position	AC/DC 24 V	GQD131.1A	–	–	–			
	Modulating DC 0...10 V	AC/DC 24 V	GQD161.1A	–	–	–	GQD166.1A		
GPC series 4 Nm for approx. 0.6 m² damper area 60 s run time 15 s SR time	2-position 3-position	AC/DC 24 V	GPC121.1A	–	–	–	GPC126.1A	8...15	6...11
		AC 230 V	GPC321.1A	–	–	–	GPC326.1A		
		AC/DC 24 V	GPC131.1A	–	–	–	GPC136.1A		
	Modulating DC 0...10 V	AC/DC 24 V	GPC161.1A	–	–	–	GPC166.1A		
	Modulating DC 0...10 V	AC 230 V	GPC361.1A	–	–	–	–		
GNP series 6 Nm for approx. 1 m² damper area 2 s run time el. fail-safe function	2-position 3-position	AC/DC 24 V	GNP191.1E	–	–	–	GNP196.1E	6.4...20.5	6.4...13
	Modulating DC 0/2...10 V 0/4...20 mA	AC/DC 24 V	GNP191.1E	–	–	–	GNP196.1E		
GMA series 7 Nm for approx. 1.5 m² damper area 90 s run time 15 s SR time	2-position 3-position	AC/DC 24 V	GMA121.1E	–	–	–	GMA126.1E	6.4...20.5	6.4...13
		AC 230 V	GMA321.1E	–	–	–	GMA326.1E		
		AC/DC 24 V	GMA131.1E	–	–	–	GMA136.1E		
	Modulating DC 0...10 V	AC/DC 24 V	GMA161.1E	GMA163.1E	GMA164.1E	–	GMA166.1E		
GCA series 18 Nm for approx. 3 m² damper area 90 s run time 15 s SR time	2-position 3-position	AC/DC 24 V	GCA121.1E	–	–	–	GCA126.1E	8...25.6	6...18
		AC 230 V	GCA321.1E	–	–	–	GCA326.1E		
		AC/DC 24 V	GCA131.1E	–	–	GCA135.1E	–		
	Modulating DC 0...10 V	AC/DC 24 V	GCA161.1E	GCA163.1E	GCA164.1E	–	GCA166.1E		

9

Actuators for HVAC applications without spring return 5 kOhm

Actuators for HVAC applications	Control signal	Operating voltage	Standard model	Feedback potenti-ometer	Adjustable offset/ span	Adjustable offset/ span with two auxi-liary switches	Feedback (1 kOhm) with two auxiliary switches	Two auxiliary switches	Dimensions, round damper shaft (mm)	Dimensions, square damper shaft (mm)
GSD-series 2 Nm for approx. 0,3 m² damper area 30 s running time	2-position	AC/DC 24 V	GSD141.1A	–	–	–	–	GSD146.1A	8...15	6...11
	3-position	AC 230 V	GSD341.1A	–	–	–	–	GSD346.1A		
	Modulating DC 0...10 V	AC/DC 24 V	GSD161.1A	–	–	–	–	GSD166.1A		
	Modulating DC 0...10 V	AC 230 V	GSD361.1A	–	–	–	–	–		
GDB-series 5 Nm for approx. 0.8 m² damper area 150 s running time t	2-position	AC/DC 24 V	GDB141.1E	GDB142.1E	–	–	–	GDB146.1E	8...16	6...12,8
	3-position	AC 230 V	GDB341.1E	–	–	–	–	GDB346.1E		
	Modulating DC 0...10 V	AC/DC 24 V	GDB161.1E	–	GDB163.1E	GDB164.1E	–	GDB166.1E		
		AC 230 V	GDB361.1E	–	–	–	–	–		
GLB-series 10 Nm for approx. 1.5 m² damper area 150 s running time	2-position	AC/DC 24 V	GLB141.1E	GLB142.1E	–	–	–	GLB146.1E	8...16	6...12,8
	3-position	AC 230 V	GLB341.1E	–	–	–	–	GLB346.1E		
	Modulating DC 0...10 V	AC/DC 24 V	GLB161.1E	–	GLB163.1E	GLB164.1E	–	GLB166.1E		
		AC 230 V	GLB361.1E	–	–	–	–	–		
GAP-series 6 Nm for approx. 1 m² damper area 2 s running time	2-position 3-position	AC/DC 24 V	GAP191.1E	–	–	–	–	GAP196.1E	6,4...20,5	6,4...13
	Modulating DC 0...10 V 0/4...20 mA	AC/DC 24 V	GAP191.1E	–	–	–	–	GAP196.1E		
GEB-series 20 Nm for approx. 4 m² damper area 150 s running time	2-position	AC/DC 24 V	GEB141.1E	GEB142.1E	–	–	–	GEB146.1E	8...20,5	8...14,5
	3-position	AC 230 V	GEB341.1E	–	–	–	–	GEB346.1E		
	Modulating DC 0...10 V	AC/DC 24 V	GEB161.1E	–	GEB163.1E	GEB164.1E	–	GEB166.1E		
		AC 230 V	GEB361.1E	–	–	–	–	–		
GBB-series 25 Nm for approx. 4 m² damper area 150 s running time	3-position	AC 24 V	GBB131.1E	–	–	–	GBB135.1E	GBB136.1E	8...25,6	6...18
		AC 230 V	GBB331.1E	–	–	–	GBB335.1E	GBB336.1E		
	Modulating DC 0...10 V	AC 24 V	GBB161.1E	–	GBB163.1E	GBB164.1E	–	GBB166.1E		
GIB-series 35 Nm for approx. 6 m² damper area 150 s running time	3-position	AC 24 V	GIB131.1E	–	–	–	GIB135.1E	GIB136.1E	8...25,6	6...18
		AC 230 V	GIB331.1E	–	–	–	GIB335.1E	GIB336.1E		
	Modulating DC 0...10 V	AC 24 V	GIB161.1E	–	GIB163.1E	GIB164.1E	–	GIB166.1E		
GDB-series 125 N for approx. 0.8 m² damper area 150 s running time	3-Punkt	AC 24 V	GDB131.2E	–	–	–	–	GDB136.2E	–	–
		AC 230 V	GDB331.2E	–	–	–	–	GDB336.2E		
	Modulating DC 0...10 V	AC 24 V	GDB161.2E	–	GDB163.2E	–	–	–		
GLB-series 250 N for approx. 1.5 m² damper area 150 s running time	3-position	AC 24 V	GLB131.2E	–	–	–	–	GLB136.2E	–	–
		AC 230 V	GLB331.2E	–	–	–	–	GLB336.2E		
	Modulating DC 0...10 V	AC 24 V	GLB161.2E	–	GLB163.2E	–	–	–		

9

Actuators (30/90 s) for fast HVAC applications without spring return

Actuators for HVAC applications	Control signal	Operating voltage	Standard model	Two auxiliary switches	Dimensions, round damper shaft (mm)	Dimensions, square damper shaft (mm)
GDD-series 5 Nm for approx. 0,8 m² damper area 30 s running time	2-position, 3-position	AC/DC 24 V	GDD141.1E	GDD146.1E	8...16	6...12.8
	Modulating DC 0...10 V	AC/DC 24 V	GDD161.1E			
GLD-series 8 Nm for approx. 1,5 m² damper area 30 s running time	2-position, 3-position	AC/DC 24 V	GLD141.1E	GLD146.1E	8...16	6...12.8
	Modulating DC 0...10 V	AC/DC 24 V	GLD161.1E			
GDA-series 5 Nm for approx. 0,8 m² damper area 90 s running time	2-position, 3-position	AC/DC 24 V	GDA141.1E	GDA146.1E	8...16	6...12.8
	Modulating DC 0...10 V	AC/DC 24 V	GDA161.1E			
GLA-series 10 Nm for approx. 1,5 m² damper area 90 s running time	2-position, 3-position	AC/DC 24 V	GLA141.1E	GLA146.1E	8...16	6...12.8
	Modulating DC 0...10 V	AC/DC 24 V	GLA161.1E			

9

Networked actuators for air volume control

guarantee interoperability thanks to the standardized and open communications protocols. As a result, the VAV controllers can be installed in any system, even those made by different manufacturers.

Actuators for air volume control

Actuators for air volume controllers 300 Pa application range		Control signal	Operating voltage	Standard model	Dimensions, round damper shaft (mm)	Dimesions, square damper shaft (mm)
	GDB 300 Pa VAV compact controller 5 Nm for approx. 0.8 m² damper area 150 s running time	3-position	AC 24 V	GDB181.1E/3	8...16	6...12,8
		Modulating DC 0/2...10 V				
		KNX S-Mode, KNX LTE-Mode, KNX PL-Link		GDB181.1E/KN		
		Modbus RTU		GDB181.1E/MO		
		BACnet MS/TP		GDB181.1E/BA		
	GLB 300 Pa VAV compact controller 10 Nm for approx. 1.5 m² damper area 150 s running time	3-position	AC 24 V	GLB181.1E/3	8...16	6...12,8
		Modulating DC 0/2...10 V				
		KNX S-Mode, KNX LTE-Mode, KNX PL-Link		GLB181.1E/KN		
		Modbus RTU		GLB181.1E/MO		
		BACnet MS/TP		GLB181.1E/BA		
	ASV 300 Pa VAV modular controller	3-position	AC 24 V	ASV181.1E/3	–	–
		Modulating DC 0/2...10 V				

* Also available as a multipack of 18 pcs (GDB.181..KN and GLB.181..KN , GDB.181..BA, other types on request)

9

Actuators for air volume controllers

VAV controllers		Control signal	Operating voltage	Standard model	Dimensions, round damper shaft (mm)	Dimen-sions, square damper shaft (mm)	Input/Output
	DXR1..D.. Compact, configurable room automation station with 5 Nm **for HVAC application**	BACnet/IP	AC 24 V	DXR1.E09PDZ-112	8...16	6...12.8	2 UI, 4 DO, 1 AO
		BACnet/IP		DXR1.E09PDZ-113			
		BACnet MS/TP		DXR1.M09PDZ-112			
		BACnet MS/TP		DXR1.M09PDZ-113			
	DXR1..L.. Compact, configurable room automation station with 10 Nm actuator **for HVAC application**	BACnet/IP	AC 24 V	DXR1.E02PLZ-112	8...16	6...12.8	–
		BACnet/IP KNX PL-Link		DXR1.E10PL-112			2 UI, 1 DI, 4 DO, 1AO
		BACnet/IP KNX PL-Link		DXR1.E10PL-113			
		BACnet/IP		DXR1.E09PLZ-112			2 UI, 4 DO, 1AO
		BACnet/MS/TP		DXR1.M09PLZ-112			
	DXR2..L.. Compact, configurable room automation station with 10 Nm actuator for HVAC applications for HVAC applications **with lighting and shading**	BACnet/IP KNX S-Mode KNX PL-Link	AC 24 V	DXR2.E10PL-102B	8...16	6...12.8	2 UI, 1 DI, 4 DO, 1 AO
		BACnet/IP KNX S-Mode KNX PL-Link		DXR2.E10PLX-102B			
		BACnet MS/TP KNX S-Mode KNX PL-Link		DXR2.M10PL-102B			
		BACnet MS/TP KNX S-Mode KNX PL-Link		DXR2.M10PLX-102B			

Room sensor and room control unit for DXR1 room automation stations

	Type	Housing color	Matching:	Room temperature measurement	Digital display for temperature and room occupancy	Temperature setpoint adjustment	Room occupancy adjustment
	QMA1.N30H	white	DXR1.M09PDZ-112	■			
			DXR1.M09PDZ-113				
			DXR1.M09PLZ-112				
			DXR1.E09PDZ-112				
			DXR1.E09PDZ-113				
			DXR1.E09PLZ-112				
	QMX1.M34H	white	DXR1.M09PDZ-112	■	■	■	■
			DXR1.M09PDZ-113				
			DXR1.M09PLZ-112				
			DXR1.E09PDZ-112				
			DXR1.E09PDZ-113				
			DXR1.E09PLZ-112				
	QMX1.M34H-1BSC	black	DXR1.M09PDZ-112	■	■	■	■
			DXR1.M09PDZ-113				
			DXR1.M09PLZ-112				
			DXR1.E09PDZ-112				
			DXR1.E09PDZ-113				
			DXR1.E09PLZ-112				

Actuators for fire and smoke protection dampers

Actuators for fire and smoke protection dampers		Control signal	Operating voltage	Two auxiliary switches	Two auxiliary switches and thermal cutout	Dimensions, square damper shaft (mm)
	GRA actuator 4 Nm for approx. 0.6 m² damper area 90 s running time 15 s spring return time	2-position	AC/DC 24 V AC 230 V	GRA126.1E/... [1] GRA326.1E/... [1]	GRA126.1E/T... [1] GRA326.1E/T... [1]	10, 12
	GNA actuator 9/7 Nm for approx. 1 m² damper area 90 s running time 15 s spring return time	2-position	AC/DC 24 V AC 230 V	GNA126.1E/..[1] GNA326.1E/..[1]	GNA126.1E/T..[1] GNA326.1E/T..[1]	10, 12
		Modulating DC 0/2...10 V	AC/DC 24 V		GNA166.1E/T12	12
	GGA actuator 18 Nm for approx. 2.5 m² damper area 90 s running time 15 s spring return time	2-position	AC/DC 24 V AC 230 V	GGA126.1E/..[1] GGA326.1E/..[1]	GGA126.1E/T..[1] GGA326.1E/T..[1]	10,12

[1] .. = use dimensions f or square damper shaft (mm)

Actuators for railway applications

Actuators for railway applications		Control signal	Operating voltage	Standard model	Feedback potentiometer	Two integrated auxiliary switches	Rotary direction switch
Air damper actuators with spring return							
	GPC series 4 Nm 60 s running time 15 s SR time	Modulating DC 0/2...10 V	DC 24 V	GPC161.1A/RW	–	–	No
			DC 110V	GPC261.1A/RW			
		2-position	DC 24 V	GPC121.1A/RW	–	GPC126.1A/RW	No
			DC 110V	GPC221.1A/RW		GPC226.1A/RW	
Air damper actuators without spring return							
	GDD series 5 Nm 30 s run time	Modulating DC 0/2...10 V	DC 24 V	GDD161.1E/RW	–	–	Yes
			DC 110V	GDD261.1E/RW			
		2-position 3-position	DC 24 V	GDD141.1E/RW	GDD142.1E/RW	GDD146.1E/RW	
			DC 110V	GDD241.1E/RW	GDD242.1E/RW	GDD246.1E/RW	
	GDA series 5 Nm 90 s run time	Modulating DC 0/2...10 V	DC 24 V	GDA161.1E/RW	–	–	Yes
		2-position 3-position	DC 24 V	GDA141.1E/RW	GDA142.1E/RW	GDA146.1E/RW	
	GLD series 8 Nm 30 s run time	Modulating DC 0/2...10 V	DC 24 V	GLD161.1E/RW	–	–	Yes
			DC 110V	GLD261.1E/RW			
		2-position 3-position	DC 24 V	GLD141.1E/RW	GLD142.1E/RW	GLD146.1E/RW	
			DC 110V	GLD241.1E/RW	GLD242.1E/RW	GLD246.1E/RW	
	GLA series 10 Nm 90 s run time	Modulating DC 0/2...10 V	DC 24 V	GLA161.1E/RW	–	–	Yes
		2-position 3-position		GLA141.1E/RW	GLA142.1E/RW	GLA146.1E/RW	

9

Accessories for actuators

	Description	GDB/ GLB	GEB/ GMA	GCA/GIB GBB	Type reference
	Rotary-to-linear set with lever Allows a direct-coupled actuator to provide a linear drive; can be used to simultaneously drive a set of opposing or adjacent dampers with a single actuator.	■			ASK71.5
	Rotary-to-linear set with lever Allows a direct-coupled actuator to provide an auxiliary linear drive; can be used to simultaneously drive a set of opposing or adjacent dampers with a single actuator.		■	■	ASK71.13 ASK71.3
	Rotary-to-linear set with lever and angle bracket For use in applications where the actuator can be rigidly surface-mounted and a linear stroke output is required.	■			ASK71.6
	Rotary-to-linear set with lever and mounting plate For use in applications where the actuator can be rigidly surface-mounted and a linear stroke output is required.		■	■	ASK71.14 ASK71.4
	Universal lever For use with all OpenAir rotary-to-linear kits for linear applications requiring connection to damper louver shaft when joint connection is not possible. For 8 to 25.6 mm round.	■	■	■	ASK71.9
	Tandem mounting bracket **Tandem mounting bracket for 2-position and 3-position GCA/GIB models** **Tandem mounting bracket for modulating GCA/GIB models**		■	 ■ ■	ASK73.3 ASK73.1 ASK73.2
	Rotary-to-linear set for duct mounting For airstream applications and where a foot-mounted actuator can be used. Includes crank arm, Teflon support-bearing ring and mounting fasteners. **Rotary-to-linear set for duct and frame mounting**	■	 ■	■	ASK71.6 ASK71.1 ASK71.11

9

Overview and selection tools

Description		GDB/ GLB	GEB/ GMA	GCA/GIB GBB	Type reference
	Rotary-to-linear set for frame mounting For direct mounting to damper frame. Includes a crank arm to generate a linear stroke, a Teflon support-bearing ring to minimize side-loading on the actuator's output bearing and other mounting fasteners.			■	ASK71.2
	Rotary-to-linear set for duct and frame mounting		■		ASK71.11
	Special shaft adapter • Up to 27 mm shaft diameter Note: When used with a GIB, accepts shaft diameters from 19 to 27 mm			■	ASK74.1
	Actuator shaft insert for small shaft diameters • Up to 10 mm diameter	■			ASK78.3
	Weathershield Includes cover, gasket and screws.	 ■	■ ■ 	 ■ ■ 	ASK75.3 ASK75.1 ASK75.4 ASK75.6 ASK75.5
	Shaft extension		■	■	ASK74.7
	Setting unit for VAV compact controller for GDB/GLB/ASV181.1E/..	■			AST20
	Interface converter (USB/PPS2) for VAV compact controller Interface converter for use with G..B181.1E/.. for series E and higher to use PC software ACS931/ACS941 etc.	■			AST22

Description		GDB/ GLB	GEB/ GMA	GCA/GIB GBB	Type reference
	External auxiliary switches External auxiliary switch kit, attachable to GCA, GMA, GEB, GBB and GIB rotary actuators - 1 external auxiliary switch - 2 external auxiliary switches		■ ■	■ ■	ASC77.1E ASC77.2E
	Shaft inserts for GDB/GLB...1 - Round 1/2" - Square 8 x 8 mm - Square 8 x 8 mm fix - Square 10 x 10 mm - Round 10 mm - Round 12 mm - D-profile fix	■ ■ ■ ■ ■ ■ ■			ASK78.5 ASK78.6 ASK78.14 ASK78.7 ASK78.9 ASK78.10 ASK78.12

For acccessories and spare parts for air damper actuators, please order data sheet:
N4697 (GMA/GEB) /GRA/GNA
N4698 (GDB/GLB)
N4699 (GCA/GBB/GIB) GGA

GQD..1A

Rotary air damper actuators 2 Nm, with spring return

- For shaft dia 8...15 mm, square 6...11 mm, min. shaft length 20 mm
- With housing made of plastic and 0.9 m connecting cable

Data sheet	N4604
Torque	2 Nm
Air damper area	0.3 m²
Positioning time	Open with motor: 30 s Closing with spring: 15 s
Cable length	0.9 m
Degree of protection	IP40
Dimensions (W x H x D)	73 x 122 x 63 mm
Warranty	60 Months

Range overview GQD..1A

Operating voltage [V]	Positioning signal	Power consumption	Auxiliary switch	Spring return function	Stock no.	Product no.
AC/DC 24	2-position	6.5 VA 4.5 W	0	Yes	BPZ:GQD121.1A	**GQD121.1A**
AC/DC 24	2-position	6.5 VA 4.5 W	2	Yes	BPZ:GQD126.1A	**GQD126.1A**
AC/DC 24	3-position	4 VA 2.5 W	0	Yes	BPZ:GQD131.1A	**GQD131.1A**
AC/DC 24	3-position	4 VA 2.5 W	2	Yes	BPZ:GQD136.1A	**GQD136.1A**
AC/DC 24	DC 0...10 V	4.5 VA 3 W	0	Yes	BPZ:GQD161.1A	**GQD161.1A**
AC/DC 24	DC 0...10 V	4.5 VA 3 W	2	Yes	BPZ:GQD166.1A	**GQD166.1A**
AC 230	2-position	10 VA 4.5 W	0	Yes	BPZ:GQD321.1A	**GQD321.1A**
AC 230	2-position	10 VA 4.5 W	2	Yes	BPZ:GQD326.1A	**GQD326.1A**

Rotary air damper actuators 4 Nm, with spring return

GPC..1A..

- With self-centering shaft adapter for shaft dia. 8...15 mm, square 6...11 mm, min. shaft length 20 mm
- With position indication
- Emergency function with spring return
- With 0.9 m connecting cable

Data sheet	A6V10636100
Torque	4 Nm
Air damper area	0.6 m²
Positioning time	Open with motor: 60 s Closing with spring: 15 s
Cable length	0.9 m
Degree of protection	IP54
Dimensions (W x H x D)	72 x 124 x 63 mm
Warranty	60 Months

Range overview GPC..1

Operating voltage [V]	Positioning signal	Power consumption	Auxiliary switch	Spring return function	Stock no.	Product no.
AC/DC 24	2-position	4.3 VA 2.7 W	0	Yes	S55499-D233	**GPC121.1A**
AC/DC 24	2-position	4.3 VA 2.7 W	2	Yes	S55499-D234	**GPC126.1A**
AC/DC 24	3-position	4.3 VA 2.7 W	0	Yes	S55499-D235	**GPC131.1A**
AC/DC 24	3-position	4.3 VA 2.7 W	2	Yes	S55499-D236	**GPC136.1A**
AC/DC 24	DC 0...10 V	3.7 VA 2.2 W	0	Yes	S55499-D237	**GPC161.1A**
AC/DC 24	DC 0...10 V	3.7 VA 2.2 W	2	Yes	S55499-D238	**GPC166.1A**
AC 230	2-position	6.9 VA 2.9 W	0	Yes	S55499-D239	**GPC321.1A**
AC 230	2-position	6.9 VA 2.9 W	2	Yes	S55499-D240	**GPC326.1A**
AC 230	DC 0...10 V	6.7 VA 2.9 W	0	Yes	S55499-D241	**GPC361.1A**

Air damper actuators
Rotary damper actuators with spring return

GMA..1E

Rotary air damper actuators 7 Nm, with spring return

- With self-centering shaft adapter for shaft dia. 6.4...20.5 mm, square 6.4...13 mm, min. shaft length 20 mm
- With position indication and adjustable mechanical limit stop
- Manual override
- With housing made of die-cast aluminium and 0.9 m connecting cable

Data sheet	N4614 / A6V101037201
Torque	7 Nm
Air damper area	1.5 m²
Positioning time	Opening with motor: 90 s Closing with spring: 15 s
Degree of protection	IP54
Dimensions (W x H x D)	81 x 192 x 63 mm
Warranty	60 Months

Range overview GMA..1E

Operating voltage [V]	Positioning signal	Power consumption	Auxiliary switch	Spring return function	Cable length [m]	Stock no.	Product no.
AC/DC 24	2-position	5 VA 3.5 W	0	Yes	0.9	BPZ:GMA121.1E	**GMA121.1E**
AC/DC 24	2-position	5 VA 3.5 W	0	Yes	0.25	S55499-D881-A404	**GMA121.1E/FW3**
AC/DC 24	2-position	5 VA 3.5 W	2	Yes	0.9	BPZ:GMA126.1E	**GMA126.1E**
AC/DC 24	3-position	5 VA 3.5 W	0	Yes	0.9	BPZ:GMA131.1E	**GMA131.1E**
AC/DC 24	3-position	5 VA 3.5 W	2	Yes	0.9	BPZ:GMA136.1E	**GMA136.1E**
AC/DC 24	DC 0...10 V	5 VA 3.5 W	0	Yes	0.9	BPZ:GMA161.1E	**GMA161.1E**
AC/DC 24		5 VA 3.5 W		Yes	0.25	S55499-D776-A404	**GMA161.1E/FW1**
AC/DC 24	DC 0...10 V	5 VA 3.5 W	0	Yes	0.25	S55499-D882-A404	**GMA161.1E/FW3**
AC/DC 24	Modbus RTU	5 VA 3.5 W	0	Yes	0.9	S55499-D300	**GMA161.1E/MO**
AC/DC 24	DC 0...35 V Adjustable	5 VA 3.5 W	0	Yes	0.9	BPZ:GMA163.1E	**GMA163.1E**
AC/DC 24	DC 0...35 V Adjustable	5 VA 3.5 W	2	Yes	0.9	BPZ:GMA164.1E	**GMA164.1E**
AC/DC 24	DC 0...10 V	5 VA 3.5 W	2	Yes	0.9	BPZ:GMA166.1E	**GMA166.1E**
AC 230	2-position	7 VA 4.5 W	0	Yes	0.9	BPZ:GMA321.1E	**GMA321.1E**
AC 230	2-position	7 VA 4.5 W	2	Yes	0.9	BPZ:GMA326.1E	**GMA326.1E**
				Yes		S55499-D224	**GMA326.1E/09H**

Type GMA132.1E has a feedback potentiometer.
Basic Documentation No.: Z4614

Accessories for rotary air damper actuators GMA..1E

Product Title	Data sheet	Stock no.	Product no.
External auxiliary switch assembly 1 switch	N4615	BPZ:ASC77.1E	**ASC77.1E**
External auxiliary switch assembly 2 switches	N4615	BPZ:ASC77.2E	**ASC77.2E**
Accessory Kit, GEB/GMA	N4697	S55859-Z101	**ASK71.01**

Accessories for rotary air damper actuators GMA..1E

Product Title	Data sheet	Stock no.	Product no.
Mounting Bracket, GS	N4697	S55859-Z118	**ASK71.07**
Rotary/linear mounting kit for duct or frame mounting	N4697	BPZ:ASK71.11	**ASK71.11**
Rotary/linear mounting kit with lever	N4697	BPZ:ASK71.14	**ASK71.14**
Turnkey for manual adjustment	N4697	S55859-Z122	**ASK71.20**
Crank Arm, Universal	N4697	BPZ:ASK71.9	**ASK71.9**
Standard Shaft adapter, GEB/GMA, complete	N4697	S55859-Z103	**ASK74.12**
Shaft adapter, GS, square, 15mm, complete	N4697	S55859-Z104	**ASK74.13**
Shaft adapter, GS, square, 12mm	N4697	S55859-Z105	**ASK74.14**
Shaft adapter, GEB/GMA, square, 10mm, complete	N4697	S55859-Z106	**ASK74.15**
Shaft adapter, GS, square, 8mm	N4697	S55859-Z107	**ASK74.16**
Shaft adapter, GM, square, 15mm	N4699	S55859-Z108	**ASK74.17**
Shaft extension	N4699	BPZ:ASK74.7	**ASK74.7**
Weather shield	N4697	BPZ:ASK75.3	**ASK75.3**
Mounting kit for rotary actuators GMA..1E with spring-return		BPZ:ASK77.2	**ASK77.2**
Rotary/linear mounting kit with lever and bracket	N4697	BPZ:ASK71.13	**ASK71.13**
Weather shield for rotary-/linear-type actuator GMA/GEB...E	N4697	BPZ:ASK75.6	**ASK75.6**

GCA..1E

Rotary air damper actuators 18 Nm, with spring return

- With self-centering shaft adapter for shaft dia. 8..25.6 mm, square 6...18 mm, min. shaft length 20 mm
- With position indication and adjustable mechanical limit stop
- Manual override
- With housing made of die-cast aluminium and 0.9 m connecting cable

Data sheet	N4613 / A6V101037201
Torque	18 Nm
Air damper area	3 m²
Positioning time	Opening with motor: 90 s Closing with spring: 15 s
Degree of protection	IP54
Dimensions (W x H x D)	100 x 313 x 71 mm
Warranty	60 Months

Range overview GCA..1E

Operating voltage [V]	Positioning signal	Power consumption	Auxiliary switch	Spring return function	Cable length [m]	Stock no.	Product no.
AC/DC 24	2-position	7 VA 5 W	0	Yes	0.9	BPZ:GCA121.1E	**GCA121.1E**
AC/DC 24	2-position	7 VA 5 W	0	Yes	0.25	S55499-D883-A404	**GCA121.1E/FW3**
AC/DC 24	2-position	7 VA 5 W	2	Yes	0.9	BPZ:GCA126.1E	**GCA126.1E**
AC/DC 24	3-position	7 VA 5 W	0	Yes	0.9	BPZ:GCA131.1E	**GCA131.1E**
AC/DC 24	3-position	7 VA 5 W	2	Yes	0.9	BPZ:GCA135.1E	**GCA135.1E**
AC/DC 24	DC 0...10 V	7 VA 5 W	0	Yes	0.9	BPZ:GCA161.1E	**GCA161.1E**
AC/DC 24	DC 0...10 V	7 VA 5 W	0	Yes	0.25	S55499-D884-A404	**GCA161.1E/FW3**
AC/DC 24	Modbus RTU	7 VA 5 W	0	Yes	0.9	S55499-D301	**GCA161.1E/MO**
AC/DC 24	DC 0...10 V	7 VA 5 W	0	Yes	5	S55499-D502	**GCA161.1H**
AC/DC 24	DC 0...35 V Adjustable	7 VA 5 W	0	Yes	0.9	BPZ:GCA163.1E	**GCA163.1E**
AC/DC 24	DC 0...35 V Adjustable	7 VA 5 W	2	Yes	0.9	BPZ:GCA164.1E	**GCA164.1E**
AC/DC 24	DC 0...10 V	7 VA 5 W	2	Yes	0.9	BPZ:GCA166.1E	**GCA166.1E**
AC 230	2-position	8 VA 6 W	0	Yes	0.9	BPZ:GCA321.1E	**GCA321.1E**
AC 230	2-position	8 VA 6 W	2	Yes	0.9	BPZ:GCA326.1E	**GCA326.1E**
AC 230	2-position	8 VA 6 W	2	Yes	5	S55499-D503	**GCA326.1H**

Type GCA135.1E has a feedback potentiometer.
Basic Documentation No.: Z4613

Accessories for rotary air damper actuators GCA..1E

Product Title	Data sheet	Stock no.	Product no.
External auxiliary switch assembly 1 switch	N4615	BPZ:ASC77.1E	**ASC77.1E**
External auxiliary switch assembly 2 switches	N4615	BPZ:ASC77.2E	**ASC77.2E**
Standard Shaft Adapter, GM	N4699	S55859-Z117	**ASK71.06**
Rotary/linear mounting kit for duct mounting	N4699	BPZ:ASK71.1	**ASK71.1**
Turnkey for manual adjustment	N4699	S55859-Z121	**ASK71.19**
Rotary/linear mounting kit with lever and bracket	N4699	BPZ:ASK71.4	**ASK71.4**
Crank Arm, Universal	N4697	BPZ:ASK71.9	**ASK71.9**
Bracket for power pack	N4699	BPZ:ASK73.1	**ASK73.1**
Shaft adapter, GM, square, 12mm	N4699	S55859-Z109	**ASK74.18**
Shaft adapter, GM, square, 10mm	N4699	S55859-Z110	**ASK74.19**
Shaft adapter, GM, square, 8mm	N4699	S55859-Z111	**ASK74.20**
Shaft extension	N4699	BPZ:ASK74.7	**ASK74.7**
Weather shield for rotarytype actuator GBB/GCA/GIB...1E	N4699	BPZ:ASK75.4	**ASK75.4**
Rotary/linear mounting kit for frame mounting	N4699	BPZ:ASK71.2	**ASK71.2**
Accessory Kit, GIB/GBB/GCA	N4699	S55859-Z102	**ASK71.02**
Rotary/linear mounting kit with lever	N4699	BPZ:ASK71.3	**ASK71.3**
Mounting Bracket, GM	N4699	S55859-Z114	**ASK71.03**
Flexible bracket for power pack	N4699	BPZ:ASK73.2	**ASK73.2**
Special shaft adapter	N4699	BPZ:ASK74.1	**ASK74.1**
Shaft Adapter for GSD/GPC		S55859-Z120	**ASK74.23**
Weather shield for rotary actuator	N4699	BPZ:ASK75.1	**ASK75.1**

Caution!
- ASK73.1 is only valid for GCA12..1E, GCA13..1E, GCA32..1E
- ASK73.2 is only valid for GCA16..1E

Air damper actuators
Rotary damper actuators with spring return for railway application

GPC..1A/RW

Air damper actuators for railway vehicles, 4 Nm, with spring return

- With self-centering shaft adapter for shaft dia. 8...15 mm, square 6...11 mm, min. shaft length 20 mm
- With position indication
- Emergency function with spring return
- With 0.9 m connecting cable

Torque	4 Nm
Air damper area	0.6 m²
Positioning time	Opening with motor: 60 s Closing with spring: 15 s
Degree of protection	IP54
Dimensions (W x H x D)	72 x 124 x 63 mm
Warranty	60 Months

Range overview GPC..1A/RW

Operating voltage [V]	Positioning signal	Power consumption [W]	Auxiliary switch	Spring return function	Cable length [m]	Stock no.	Product no.
DC 24	2-position	2.7	0	Yes	0.9	S55499-D729	**GPC121.1A/RW**
DC 24	2-position	2.7	2	Yes	0.9	S55499-D730	**GPC126.1A/RW**
DC 24	DC 0/2...10 V	2.2	0	Yes	0.9	S55499-D731	**GPC161.1A/RW**
DC 110	2-position	2.3	0	Yes	0.9	S55499-D726	**GPC221.1A/RW**
DC 110	2-position	2.3	2	Yes	0.9	S55499-D727	**GPC226.1A/RW**
DC 110	2-position	2.3	0	Yes	0.9	S55499-D728	**GPC261.1A/RW**

Rotary air damper actuators 2 Nm, without spring return

GSD..1A

- For shaft dia 8...15 mm, square 6...11 mm, min. shaft length 20 mm
- With housing made of plastic and 0.9 m connecting cable

Data sheet	N4603
Torque	2 Nm
Air damper area	0.3 m²
Positioning time	30 s
Cable length	0.9 m
Degree of protection	IP54
Dimensions (W x H x D)	73 x 122 x 63 mm
Warranty	60 Months

Range overview GSD..1A

Operating voltage [V]	Positioning signal	Power consumption	Auxiliary switch	Spring return function	Stock no.	Product no.
AC 24 DC 24...48	Open-close / three-position	2.2 VA 1.2 W	2	No	S55499-D227	**GSD146.1A**
AC 24 DC 24...48	DC 0/2..10 V	2.4 VA 1.4 W	0	No	S55499-D228	**GSD161.1A**
AC 24 DC 24...48	Open-close / three-position	2.2 VA 1.2 W	0	No	S55499-D281	**GSD141.1A**
AC 24 DC 24...48	DC 0/2..10 V	2.4 VA 1.4 W	2	No	S55499-D229	**GSD166.1A**
AC 100...240	Open-close / three-position	4.5 VA 1.8 W	0	No	S55499-D282	**GSD341.1A**
AC 100...240	Open-close / three-position	4.5 VA 1.8 W	2	No	S55499-D230	**GSD346.1A**
AC 100...240	DC 0/2...10 V	3.7 VA 1.4 W	0	No	S55499-D231	**GSD361.1A**

GDB..1E

Rotary air damper actuators 5 Nm, without spring return

- For shaft dia. 8..16 mm, square 6...12 mm, min. shaft length 30 mm
- With position indication and adjustable mechanical limit stop
- Button for disengaging the gear train to enable manual override
- With base made of steel, plastic housing and 0.9 m connecting cable

Data sheet	A6V10636149 / A6V10881141
Torque	5 Nm
Air damper area	0.8 m²
Positioning time	150 s
Cable length	0.9 m
Degree of protection	IP54
Dimensions (W x H x D)	68 x 137 x 59.5 mm
Warranty	60 Months

Range overview GDB..1E

Operating voltage [V]	Positioning signal	Power consumption	Auxiliary switch	Spring return function	Stock no.	Product no.
AC 24	KNX TP	3 VA 2.5 W	0	No	S55499-D190	**GDB111.1E/KN**
AC 24	Modbus RTU	3 VA 2.5 W	0	No	S55499-D191	**GDB111.1E/MO**
AC/DC 24	2-position/3-position	2.5 VA 1.1 W	0	No	S55499-D377	**GDB141.1E**
AC/DC 24	2-position/3-position	1.0 VA 0.6 W	0	No	S55499-D184	**GDB141.1E**
AC/DC 24	2-position/3-position	2.5 VA 1.1 W	0	No	S55499-D843	**GDB141.1G**
AC/DC 24	2-position/3-position	2.5 VA 1.1 W	0	No	S55499-D378	**GDB142.1E**
AC/DC 24	2-position/3-position	1.0 VA 0.6 W	0	No	S55499-D185	**GDB142.1E**
AC/DC 24	2-position/3-position	2.5 VA 1.1 W	2	No	S55499-D379	**GDB146.1E**
AC/DC 24	2-position/3-position	1.0 VA 0.6 W	2	No	S55499-D186	**GDB146.1E**
AC/DC 24	DC 0/2...10 V	2.1 VA 1.2 W	0	No	S55499-D393	**GDB161.1E**
AC/DC 24	DC 0/2...10 V	1.3 VA 1.0 W	0	No	S55499-D266	**GDB161.1E**
AC 24 DC 24	DC 0/2...10 V	2.1 VA 1.2 W	0	No	S55499-D748-A559	**GDB161.1E/FX**
AC/DC 24	Modbus RTU	3 VA 2.5 W	0	No	S55499-D852	**GDB161.1E/MO**
AC/DC 24	DC 0...35 V Adjustable	1.3 VA 1.0 W	0	No	S55499-D267	**GDB163.1E**
AC/DC 24	DC 0...35 V Adjustable	2.1 VA 1.2 W	0	No	S55499-D394	**GDB163.1E**
AC/DC 24	DC 0...35 V Adjustable	2.1 VA 1.2 W	2	No	S55499-D395	**GDB164.1E**
AC/DC 24	DC 0...35 V Adjustable	1.3 VA 1.0 W	2	No	S55499-D268	**GDB164.1E**
AC/DC 24	DC 0/2...10 V	3.3 VA 1.3 W	2	No	S55499-D396	**GDB166.1E**
AC/DC 24	DC 0/2...10 V	1.3 VA 1.0 W	2	No	S55499-D269	**GDB166.1E**
AC 230	2-position/3-position	5 VA 1.6 W	0	No	S55499-D380	**GDB341.1E**

Range overview GDB..1E

Operating voltage [V]	Positioning signal	Power consumption	Auxiliary switch	Spring return function	Stock no.	Product no.
AC 230	2-position/3-position	5 VA 1.6 W	0	No	S55499-D187	**GDB341.1E**
AC 230	2-position/3-position	5 VA 1.6 W	2	No	S55499-D381	**GDB346.1E**
AC 230	2-position/3-position	5 VA 1.6 W	2	No	S55499-D188	**GDB346.1E**
AC 230	DC 0/2...10 V	2.1 VA 1.2 W	0	No	S55499-D382	**GDB361.1E**
AC 230	DC 0/2...10 V	2.1 VA 1.2 W	0	No	S55499-D189	**GDB361.1E**
AC 230	DC 0/2...10 V	2.1 VA 1.2 W	0	No	S55499-D504	**GDB361.1G**

Type GDB142.1E has a feedback potentiometer.
Typ GDB361.1G has a cable lenght of 2.5m.
Basic Documentation No.: A6V10636139.
Additional variants of actuators can be configured in Product Configurator.

Rotary air damper actuator, AC/DC 24 V, 5 Nm with Modbus RTU comminucation

GDB161.1E/MO

- For shaft dia. 8..16 mm, square 6...12 mm, min. shaft length 30 mm
- With position indication and adjustable mechanical limit stop
- Button for disengaging the gear train to enable manual override
- With base made of steel, plastic housing and 0.9 m connecting cable
- Nominal torque 5 Nm

Data sheet	-
Torque	5 Nm
Air damper area	0.8 m²
Angular rotation	90°
Power consumption	3 VA 2.5 W
Positioning time	150 s
Communication	Modbus RTU
Cable length	0.9 m
Positioning signal	Modbus RTU
Spring return function	No
Degree of protection	IP54
Ambient humidity, operation	5...95 % r.h.
Dimensions (W x H x D)	68 x 137 x 59.5 mm
Mounting position	upright to horizontal
Operating voltage	AC/DC 24 V
Position feedback	DC 0...10 V DC 2...10 V
Auxiliary switch	0
Warranty	60 Months

Stock no.	Product no.
S55499-D852	GDB161.1E/MO

Type GDB142.1E has a feedback potentiometer.
Typ GDB361.1G has a cable lenght of 2.5m.
Basic Documentation No.: A6V10636139.
Additional variants of actuators can be configured in Product Configurator.

GDB..1E/09H

Rotary air damper actuators 5 Nm, without spring return

- For shaft dia. 8..16 mm, square 6...12 mm, min. shaft length 30 mm
- With position indication and adjustable mechanical limit stop
- Button for disengaging the gear train to enable manual override
- With base made of steel, plastic housing and 0.9 m halogenfree connecting cable
- One extra screw in the package (to set lower limitation)

Data sheet	A6V10636149
Torque	5 Nm
Air damper area	0.8 m²
Positioning time	150 s
Degree of protection	IP54
Dimensions (W x H x D)	68 x 137 x 59.5 mm
Warranty	60 Months

Range overview GDB..1E/09H

Operating voltage [V]	Positioning signal	Power consumption	Auxiliary switch	Spring return function	Cable length [m]	Stock no.	Product no.
AC/DC 24	2-position/3-position	2.5 VA 1.1 W	0	No	0.9	S55499-D360	**GDB141.1E/09H**
AC/DC 24	DC 0/2...10 V	2.1 VA 1.2 W	0	No	0.9	S55499-D362	**GDB161.1E/09H**
AC 230	2-position/3-position	5 VA 1.6 W	0	No	0.9	S55499-D361	**GDB341.1E/09H**

Accessories for rotary air damper actuators GDB..1E and GLB..1E

Product Title	Data sheet	Stock no.	Product no.
Mounting Bracket, BG	N4698	S55859-Z115	**ASK71.04**
Position Indicator, BG	N4698	S55859-Z116	**ASK71.05**
Mounting Bracket, BG, short	N4698	S55859-Z119	**ASK71.08**
Centering insert 2 x square 10 mm	N4698	S55859-Z123	**ASK71.21**
Rotary/linear mounting kit	N4698	BPZ:ASK71.5	**ASK71.5**
Rotary/linear mounting kit with bracket	N4698	BPZ:ASK71.6	**ASK71.6**
Crank Arm, Universal	N4697	BPZ:ASK71.9	**ASK71.9**
Centering insert D-profile fixed 12 mm dia. × 9 mm	N4698	BPZ:ASK78.12	**ASK78.12**
Insert for small shaft dia.	N4698	BPZ:ASK78.3	**ASK78.3**
Weather shield for rotary-/linear-type actuator GDB/GLB	N4698	BPZ:ASK75.5	**ASK75.5**
Centering insert 12.7 mm dia. (½")	N4698	BPZ:ASK78.5	**ASK78.5**
Centering insert 8 mm square	N4698	BPZ:ASK78.6	**ASK78.6**
Centering insert 10 mm square	N4698	BPZ:ASK78.7	**ASK78.7**
Centering insert 10 mm dia.	N4698	BPZ:ASK78.9	**ASK78.9**
Centering insert 12 mm dia.	N4698	BPZ:ASK78.10	**ASK78.10**
Centering insert 8 mm square	N4698	BPZ:ASK78.14	**ASK78.14**

Rotary air damper actuators 10 Nm, without spring return

GLB..1E

- For shaft dia. 8..16 mm, square 6...12 mm, min. shaft length 30 mm
- With position indication and adjustable mechanical limit stop
- Button for disengaging the gear train to enable manual override
- With base made of steel, plastic housing and 0.9 m connecting cable

Data sheet	A6V10636202 / A6V10881141
Torque	10 Nm
Air damper area	1.5 m²
Positioning time	150 s
Cable length	0.9 m
Degree of protection	IP54
Dimensions (W x H x D)	68 x 137 x 59.5 mm
Warranty	60 Months

Range overview GLB..1E

Operating voltage [V]	Positioning signal	Power consumption	Auxiliary switch	Spring return function	Stock no.	Product no.
AC 24	KNX TP	3 VA 2.5 W	0	No	S55499-D198	**GLB111.1E/KN**
AC 24	Modbus RTU	3 VA 2.5 W	0	No	S55499-D199	**GLB111.1E/MO**
AC/DC 24	2-position/3-position	2 VA 1.3 W	0	No	S55499-D385	**GLB141.1E**
AC/DC 24	2-position/3-position	1.3 VA 0.8 W	0	No	S55499-D192	**GLB141.1E**
AC/DC 24	2-position/3-position	2 VA 1.3 W	0	No	S55499-D443	**GLB141.1H**
AC/DC 24	2-position/3-position	2 VA 1.3 W	0	No	S55499-D386	**GLB142.1E**
AC/DC 24	2-position/3-position	1.3 VA 0.8 W	0	No	S55499-D193	**GLB142.1E**
AC/DC 24	2-position/3-position	2 VA 1.3 W	2	No	S55499-D387	**GLB146.1E**
AC/DC 24	2-position/3-position	1.3 VA 0.8 W	2	No	S55499-D194	**GLB146.1E**
AC/DC 24	DC 0/2...10 V	1.5 VA 1.0 W	0	No	S55499-D270	**GLB161.1E**
AC/DC 24	DC 0/2...10 V	2.5 VA 1.5 W	0	No	S55499-D398	**GLB161.1E**
AC 24 DC 24	DC 0/2...10 V	2.5 VA 1.5 W	0	No	S55499-D587	**GLB161.1H**
AC/DC 24	DC 0...35 V Adjustable	1.5 VA 1.0 W	0	No	S55499-D271	**GLB163.1E**
AC/DC 24	DC 0...35 V Adjustable	2.5 VA 1.5 W	0	No	S55499-D399	**GLB163.1E**
AC 24	DC 0...35 V Adjustable	2.5 VA 1.5 W	2	No	S55499-D400	**GLB164.1E**
AC/DC 24	DC 0...35 V Adjustable	1.5 VA 1.0 W	2	No	S55499-D272	**GLB164.1E**
AC/DC 24	DC 0/2...10 V	1.5 VA 1.0 W	2	No	S55499-D273	**GLB166.1E**
AC/DC 24	DC 0/2...10 V	2.5 VA 1.5 W	2	No	S55499-D401	**GLB166.1E**
AC 230	2-position/3-position	5.8 VA 1.9 W	0	No	S55499-D388	**GLB341.1E**
AC 230	2-position/3-position	5.8 VA 1.9 W	0	No	S55499-D195	**GLB341.1E**

Range overview GLB..1E

Operating voltage [V]	Positioning signal	Power consumption	Auxiliary switch	Spring return function	Stock no.	Product no.
AC 230	2-position/3-position	5.8 VA 1.9 W	2	No	S55499-D389	**GLB346.1E**
AC 230	2-position/3-position	5.8 VA 1.9 W	2	No	S55499-D196	**GLB346.1E**
AC 230	DC 0/2...10 V	4 VA 1.6 W	0	No	S55499-D390	**GLB361.1E**
AC 230	DC 0/2...10 V	4 VA 1.6 W	0	No	S55499-D197	**GLB361.1E**

Type GLB142.1E has a feedback potentiometer.
Type GLB161.1H and GLB141.1H have a cable lenght of 5m.
Basic Documentation No.: A6V10636196.
Additional variants of actuators can be configured in Product Configurator.

Rotary air damper actuators 10 Nm, without spring return

GLB..1E/09H

- For shaft dia. 8..16 mm, square 6...12 mm, min. shaft length 30 mm
- With position indication and adjustable mechanical limit stop
- Button for disengaging the gear train to enable manual override
- With base made of steel, plastic housing and 0.9 m halogenfree connecting cable
- One extra screw in the package (to set lower limitation)

Data sheet	A6V10636202
Torque	10 Nm
Air damper area	1.5 m²
Positioning time	150 s
Degree of protection	IP54
Dimensions (W x H x D)	68 x 137 x 59.5 mm
Warranty	60 Months

Range overview GLB..1E/09H

Operating voltage [V]	Positioning signal	Power consumption	Auxiliary switch	Spring return function	Cable length [m]	Stock no.	Product no.
AC/DC 24	2-position/3-position	2 VA 1.3 W	0	No	0.9	S55499-D357	**GLB141.1E/09H**
AC/DC 24	DC 0/2...10 V	2.5 VA 1.5 W	0	No	0.9	S55499-D359	**GLB161.1E/09H**
AC 230	2-position/3-position	5.8 VA 1.9 W	0	No	0.9	S55499-D358	**GLB341.1E/09H**

Air damper actuators
Rotary damper actuators non-spring return

GEB..1E..

Rotary air damper actuators 20 Nm, without spring return

- With self-centering shaft adapter for shaft dia. 8...20.5 mm, square 8...14.5 mm, min. shaft length 20 mm
- With position indication and adjustable mechanical limit stop
- Button for disengaging the gear train to enable manual control
- With housing made of die-cast aluminium and 0.9 m connecting cable

Data sheet	A6V11449860
Torque	20 Nm
Air damper area	4 m²
Angular rotation	90°
Positioning time	150 s
Degree of protection	IP54
Dimensions (W x H x D)	82 x 192 x 63 mm
Warranty	60 Months

Range overview GEB..1E..

Operating voltage [V]	Positioning signal	Power consumption	Auxiliary switch	Spring return function	Cable length [m]	Stock no.	Product no.
AC 24 DC 24...48	2-position/3-position	2.3 VA 1.1 W	0	No	0.9	S55499-D329	**GEB141.1E**
AC 24 DC 24...48	2-position/3-position	2.3 VA 1.1 W	0	No	0.9	S55499-D330	**GEB142.1E**
AC 24 DC 24...48	2-position/3-position	2.3 VA 1.1 W	2	No	0.9	S55499-D331	**GEB146.1E**
AC 24 DC 24...48	DC 0/2...10 V	2.5 VA 1.2 W	0	No	0.9	S55499-D332	**GEB161.1E**
AC 24 DC 24...48	DC 0...35 V	2.5 VA 1.2 W	0	No	0.9	S55499-D333	**GEB163.1E**
AC 24 DC 24...48	DC 0...35 V	2.5 VA 1.2 W	2	No	0.9	S55499-D334	**GEB164.1E**
AC 24 DC 24...48	DC 0/2...10 V	2.5 VA 1.2 W	2	No	0.9	S55499-D335	**GEB166.1E**
AC 100...240	2-position/3-position	4 VA 1.6 W	0	No	0.9	S55499-D336	**GEB341.1E**
AC 100...240	2-position/3-position	4 VA 1.6 W	2	No	0.9	S55499-D337	**GEB346.1E**
AC 100...240	DC 0/2...10 V	3.4 VA 1.3 W	0	No	0.9	S55499-D338	**GEB361.1E**

Type GEB142.1E has a feedback potentiometer.

Accessories for rotary air damper actuators GEB..1E

Product Title	Data sheet	Stock no.	Product no.
External auxiliary switch assembly 1 switch	N4615	BPZ:ASC77.1E	**ASC77.1E**
External auxiliary switch assembly 2 switches	N4615	BPZ:ASC77.2E	**ASC77.2E**
Accessory Kit, GEB/GMA	N4697	S55859-Z101	**ASK71.01**
Mounting Bracket, GS	N4697	S55859-Z118	**ASK71.07**
Rotary/linear mounting kit for duct or frame mounting	N4697	BPZ:ASK71.11	**ASK71.11**
Rotary/linear mounting kit with lever	N4697	BPZ:ASK71.14	**ASK71.14**
Crank Arm, Universal	N4697	BPZ:ASK71.9	**ASK71.9**
Standard Shaft adapter, GEB/GMA, complete	N4697	S55859-Z103	**ASK74.12**
Shaft adapter, GS, square, 15mm, complete	N4697	S55859-Z104	**ASK74.13**
Shaft adapter, GS, square, 12mm	N4697	S55859-Z105	**ASK74.14**
Shaft adapter, GEB/GMA, square, 10mm, complete	N4697	S55859-Z106	**ASK74.15**
Shaft adapter, GS, square, 8mm	N4697	S55859-Z107	**ASK74.16**
Shaft adapter, GM, square, 15mm	N4699	S55859-Z108	**ASK74.17**

Accessories for rotary air damper actuators GEB..1E

Product Title	Data sheet	Stock no.	Product no.
Shaft extension	N4699	BPZ:ASK74.7	**ASK74.7**
Rotary/linear mounting kit with lever and bracket	N4697	BPZ:ASK71.13	**ASK71.13**
Weather shield for rotary-/linear-type actuator GMA/GEB...E	N4697	BPZ:ASK75.6	**ASK75.6**

GBB..1E

Rotary air damper actuators 25 Nm, without spring return

- With self-centering shaft adapter for shaft dia. 8..25.6 mm, square 6...18 mm, min. shaft length 20 mm
- With position indication and adjustable mechanical limit stop
- Button for disengaging the gear train to enable manual control
- With housing made of die-cast aluminium and 0.9 m connecting cable

Data sheet	N4626
Torque	25 Nm
Air damper area	4 m²
Positioning time	150 s
Degree of protection	IP54
Dimensions (W x H x D)	100 x 300 x 75 mm
Warranty	60 Months

Range overview GBB..1E

Rotary actuators 25 Nm for ball valves VAF41..

Operating voltage [V]	Positioning signal	Power consumption	Auxiliary switch	Spring return function	Cable length [m]	Stock no.	Product no.
AC 24	3-position	7 VA 7 W	0	No	0.9	BPZ:GBB131.1E	**GBB131.1E**
AC 24	3-position	7 VA 7 W	2	No	0.9	BPZ:GBB135.1E	**GBB135.1E**
AC 24	3-position	7 VA 7 W	2	No	0.9	BPZ:GBB136.1E	**GBB136.1E**
AC 24	3-position	7 VA 7 W	2	No	0.9	S55499-D867	**GBB136.1E/102**
AC 24	DC 0...10 V	8 VA 8 W	0	No	0.9	BPZ:GBB161.1E	**GBB161.1E**
AC 24	DC 0...10 V	8 VA 8 W	0	No	0.9	S55499-D868	**GBB161.1E/102**
AC 24	DC 0...35 V Adjustable	8 VA 8 W	0	No	0.9	BPZ:GBB163.1E	**GBB163.1E**
AC 24	DC 0...35 V Adjustable	8 VA 8 W	2	No	0.9	BPZ:GBB164.1E	**GBB164.1E**
AC 24	DC 0...10 V	8 VA 8 W	2	No	0.9	BPZ:GBB166.1E	**GBB166.1E**
AC 230	3-position	5 VA 5 W	0	No	0.9	BPZ:GBB331.1E	**GBB331.1E**
AC 230	3-position	5 VA 5 W	2	No	0.9	BPZ:GBB335.1E	**GBB335.1E**
AC 230	3-position	5 VA 5 W	2	No	0.9	BPZ:GBB336.1E	**GBB336.1E**

Types GBB135.1E and GBB335.1E have a feedback potentiometer.
Basic Documentation No.: Z4626

Rotary air damper actuators 25 Nm, without spring return

GBB..1E (MK3)

- With self-centering shaft adapter for shaft dia. 8...25.6 mm, square 6...18 mm, min. shaft length 20 mm
- With position indication and adjustable mechanical limit stop
- Button for disengaging the gear train to enable manual control
- With housing made of die-cast aluminum and 0.9 m connecting cable

Data sheet	A6V14252663
Torque	25 Nm
Air damper area	4 m²
Angular rotation	90°
Positioning time	150 s
Connection cable	0.9 m
Degree of protection	IP54
Medium temperature	-32...70 °C
Ambient humidity, operation	95 % r.h.
Dimensions (W x H x D)	100 x 300 x 67.5 mm
Warranty	60 Months

Range overview GBB..1E (MK3)

Operating voltage [V]	Power consumption	Auxiliary switch	Spring return function	Cable length [m]	Stock no.	Product no.
AC/DC 24	2.1 VA 1.4 W	0	No	0.9	S55499-D813	GBB141.1E
AC/DC 24	2.1 VA 1.4 W	2	No	0.9	S55499-D814	GBB145.1E
AC/DC 24	2.1 VA 1.4 W	2	No	0.9	S55499-D815	GBB146.1E
AC/DC 24	2.2 VA 1.5 W	0	No	0.9	S55499-D816	GBB161.1E
AC/DC 24	2.2 VA 1.5 W	0	No	5	S55499-D863	GBB161.1H
AC/DC 24	2.2 VA 1.5 W	0	No	0.9	S55499-D817	GBB163.1E
			No	5	S55499-D864	GBB163.1H
AC/DC 24	2.2 VA 1.5 W	2	No	0.9	S55499-D818	GBB164.1E
AC/DC 24	2.2 VA 1.5 W	2	No	0.9	S55499-D819	GBB166.1E

GIB..1E

Rotary air damper actuators 35 Nm, without spring return

- With self-centering shaft adapter for shaft dia. 8..25.6 mm, square 6...18 mm, min. shaft length 20 mm
- With position indication and adjustable mechanical limit stop
- Button for disengaging the gear train to enable manual override
- With housing made of die-cast aluminium and 0.9 m connecting cable

Data sheet	N4626 / A6V101037253
Torque	35 Nm
Air damper area	6 m²
Positioning time	150 s
Degree of protection	IP54
Dimensions (W x H x D)	100 x 300 x 75 mm
Warranty	60 Months

Range overview GIB..1E

Rotary actuators 35 Nm for ball valves VAF41..

Operating voltage [V]	Positioning signal	Power consumption	Auxiliary switch	Spring return function	Cable length [m]	Stock no.	Product no.
AC 24	3-position	7 VA 7 W	0	No	0.9	BPZ:GIB131.1E	**GIB131.1E**
AC 24	3-position	7 VA 7 W	2	No	0.9	BPZ:GIB135.1E	**GIB135.1E**
AC 24	3-position	7 VA 7 W	2	No	0.9	BPZ:GIB136.1E	**GIB136.1E**
AC 24	DC 0...10 V	8 VA 8 W	0	No	0.9	BPZ:GIB161.1E	**GIB161.1E**
AC 24	Modbus RTU	8 VA 8 W	0	No	0.9	S55499-D299	**GIB161.1E/MO**
AC 24	DC 0...35 V Adjustable	8 VA 8 W	0	No	0.9	BPZ:GIB163.1E	**GIB163.1E**
AC 24	DC 0...35 V Adjustable	8 VA 8 W	2	No	0.9	BPZ:GIB164.1E	**GIB164.1E**
AC 24	DC 0...10 V	8 VA 8 W	2	No	0.9	BPZ:GIB166.1E	**GIB166.1E**
AC 230	3-position	5 VA 5 W	0	No	0.9	BPZ:GIB331.1E	**GIB331.1E**
AC 230	3-position	5 VA 5 W	2	No	0.9	BPZ:GIB335.1E	**GIB335.1E**
AC 230	3-position	5 VA 5 W	2	No	0.9	BPZ:GIB336.1E	**GIB336.1E**

Types GIB135.1E and 335.1E have a feedback potentiometer.
Basic Documentation No.: Z4626

Rotary air damper actuators 35 Nm, without spring return

GIB..1E (MK3)

- With self-centering shaft adapter for shaft dia. 8...25.6 mm, square 6...18 mm, min. shaft length 20 mm
- With position indication and adjustable mechanical limit stop
- Button for disengaging the gear train to enable manual control
- With housing made of die-cast aluminum and 0.9 m connecting cable

Data sheet	A6V14255636
Torque	35 Nm
Air damper area	6 m²
Angular rotation	90°
Positioning time	150 s
Connection cable	0.9 m
Degree of protection	IP54
Medium temperature	-32...70 °C
Ambient humidity, operation	95 % r.h.
Dimensions (W x H x D)	100 x 300 x 67.5 mm
Warranty	60 Months

Range overview GIB..1E (MK3)

Operating voltage [V]	Power consumption	Auxiliary switch	Spring return function	Cable length [m]	Stock no.	Product no.
AC/DC 24	2.6 VA 1.8 W	0	No	0.9	S55499-D339	**GIB141.1E**
AC/DC 24	2.6 VA 1.8 W	0	No	0.9	S55499-D907-A429	**GIB141.1E/CR**
AC/DC 24	2.6 VA 1.8 W	2	No	0.9	S55499-D812	**GIB145.1E**
AC/DC 24	2.6 VA 1.8 W	2	No	0.9	S55499-D341	**GIB146.1E**
AC/DC 24	2.7 VA 1.9 W	0	No	0.9	S55499-D342	**GIB161.1E**
AC/DC 24	2.7 VA 1.9 W	0	No	0.9	S55499-D343	**GIB163.1E**
AC/DC 24	2.7 VA 1.9 W	2	No	0.9	S55499-D344	**GIB164.1E**
AC/DC 24	2.7 VA 1.9 W	2	No	0.9	S55499-D345	**GIB166.1E**

Accessories for rotary air damper actuators GBB..1E and GIB..1E

Product Title	Data sheet	Stock no.	Product no.
External auxiliary switch assembly 1 switch	N4615	BPZ:ASC77.1E	**ASC77.1E**
External auxiliary switch assembly 2 switches	N4615	BPZ:ASC77.2E	**ASC77.2E**
Standard Shaft Adapter, GM	N4699	S55859-Z117	**ASK71.06**
Rotary/linear mounting kit for duct mounting	N4699	BPZ:ASK71.1	**ASK71.1**
Turnkey for manual adjustment	N4699	S55859-Z121	**ASK71.19**
Turnkey for manual adjustment	N4697	S55859-Z122	**ASK71.20**
Rotary/linear mounting kit with lever and bracket	N4699	BPZ:ASK71.4	**ASK71.4**
Crank Arm, Universal	N4697	BPZ:ASK71.9	**ASK71.9**
Bracket for power pack	N4699	BPZ:ASK73.1	**ASK73.1**
Shaft adapter, GM, square, 12mm	N4699	S55859-Z109	**ASK74.18**
Shaft adapter, GM, square, 10mm	N4699	S55859-Z110	**ASK74.19**
Shaft adapter, GM, square, 8mm	N4699	S55859-Z111	**ASK74.20**
Shaft extension	N4699	BPZ:ASK74.7	**ASK74.7**
Weather shield for rotarytype actuator GBB/GCA/GIB...1E	N4699	BPZ:ASK75.4	**ASK75.4**
Rotary/linear mounting kit for frame mounting	N4699	BPZ:ASK71.2	**ASK71.2**

New Product

Accessories for rotary air damper actuators GBB..1E and GIB..1E

Product Title	Data sheet	Stock no.	Product no.
Accessory Kit, GIB/GBB/GCA	N4699	S55859-Z102	**ASK71.02**
Rotary/linear mounting kit with lever	N4699	BPZ:ASK71.3	**ASK71.3**
Mounting Bracket, GM	N4699	S55859-Z114	**ASK71.03**
Flexible bracket for power pack	N4699	BPZ:ASK73.2	**ASK73.2**
Special shaft adapter	N4699	BPZ:ASK74.1	**ASK74.1**
Weather shield for rotary actuator	N4699	BPZ:ASK75.1	**ASK75.1**

Caution!
- ASK73.1 is only valid for GIB13..1E and GIB33..1E
- ASK73.2 is only valid for GIB16..1E

Air damper actuators for railway vehicles 5 Nm, without spring return

GDA..1E/RW

- For shaft dia. 8...16 mm, min. shaft length 30 mm, square 6...12,8 mm, min. shaft length 20 mm
- Button for disengaging the gear train to enable manual override
- For air conditioning units and air distribution systems for railway vehicles
- Connection cables railway specific 0.9 m
- Printed circuit board, coated

Data sheet	A6V10636280 / A6V10636293
Torque	5 Nm
Air damper area	0.8 m²
Positioning time	90 s
Cable length	0.9 m
Degree of protection	IP54
Dimensions (W x H x D)	71 x 137 x 60.6 mm
Warranty	60 Months

Range overview GDA..1E/RW

Operating voltage [V]	Positioning signal	Power consumption [W]	Auxiliary switch	Spring return function	Stock no.	Product no.
DC 24	2-position/3-position	1	0	No	S55499-D212	**GDA141.1E/RW**
DC 24	2-position/3-position	1	0	No	S55499-D214	**GDA142.1E/RW**
DC 24	2-position/3-position	1	2	No	S55499-D213	**GDA146.1E/RW**
DC 24	DC0/2...10 V	1	0	No	S55499-D215	**GDA161.1E/RW**

Type GDA142.1E/RW has a feedback potentiometer.

Air damper actuators
Rotary damper actuators non-spring return for railway application

GDD..1E/RW

Air damper actuators for railway vehicles 5 Nm, without spring return

- For shaft dia. 8...16 mm, min. shaft length 30 mm, square 6...12,8 mm, min. shaft length 20 mm
- Button for disengaging the gear train to enable manual override
- For air conditioning units and air distribution systems for railway vehicles
- Connection cables railway specific 0.9 m
- Printed circuit board, coated

Torque	5 Nm
Air damper area	0.8 m²
Positioning time	30 s
Cable length	0.9 m
Degree of protection	IP54
Dimensions (W x H x D)	71 x 137 x 60.6 mm

Range overview GDD..1E/RW

Operating voltage [V]	Positioning signal	Power consumption	Auxiliary switch	Spring return function	Stock no.	Product no.
DC 24	2-position/3-position	1.5 W	0	No	S55499-D208	**GDD141.1E/RW**
DC 110		1.8 VA 1.8 W	0	No	S55499-D718	**GDD241.1E/RW**
DC 110		1.8 VA 1.8 W	0	No	S55499-D719	**GDD242.1E/RW**
DC 110		1.8 VA 1.8 W	2	No	S55499-D720	**GDD246.1E/RW**
DC 110		1.8 VA 1.3 W	0	No	S55499-D721	**GDD261.1E/RW**
DC 24	2-position/3-position	1.5 W	0	No	S55499-D210	**GDD142.1E/RW**
DC 24	2-position/3-position	1.5 W	2	No	S55499-D209	**GDD146.1E/RW**
DC 24	DC0/2...10 V	1.5 W	0	No	S55499-D211	**GDD161.1E/RW**

Type GDD142.1E/RW has a feedback potentiometer.

Air damper actuators for railway vehicles 8 Nm, without spring return

GLD..1E/RW

- For shaft dia. 8...16 mm, min. shaft length 30 mm, square 6...12,8 mm, min. shaft length 20 mm
- Button for disengaging the gear train to enable manual override
- For air conditioning units and air distribution systems for railway vehicles
- Connection cables railway specific 0.9 m
- Printed circuit board, coated

Data sheet	A6V10636286 / A6V10636299
Torque	8 Nm
Air damper area	1.5 m²
Positioning time	30 s
Cable length	0.9 m
Degree of protection	IP54
Dimensions (W x H x D)	71 x 137 x 60.6 mm
Warranty	60 Months

Range overview GLD..1E/RW

Operating voltage [V]	Positioning signal	Power consumption	Auxiliary switch	Spring return function	Stock no.	Product no.
DC 24	2-position/3-position	1.8 W	0	No	S55499-D216	**GLD141.1E/RW**
DC 110	2-position/3-position	1.8 VA 2.1 W	0	No	S55499-D722	**GLD241.1E/RW**
DC 110	2-position/3-position	1.8 VA 2.1 W	0	No	S55499-D723	**GLD242.1E/RW**
DC 110	2-position/3-position	1.8 VA 2.1 W	2	No	S55499-D724	**GLD246.1E/RW**
DC 110	DC 0/2...10 V	1.8 VA 2.2 W	0	No	S55499-D725	**GLD261.1E/RW**
DC 24	2-position/3-position	1.8 W	0	No	S55499-D218	**GLD142.1E/RW**
DC 24	2-position/3-position	1.8 W	2	No	S55499-D217	**GLD146.1E/RW**
DC 24	DC0/2...10 V	1.8 W	0	No	S55499-D219	**GLD161.1E/RW**

Type GLD142.1E/RW has a feedback potentiometer.

Air damper actuators
Rotary damper actuators non-spring return for railway application

Air damper actuators for railway vehicles 10 Nm, without spring return

GLA..1E/RW

- For shaft dia. 8...16 mm, min. shaft length 30 mm, square 6...12,8 mm, min. shaft length 20 mm
- Button for disengaging the gear train to enable manual override
- For air conditioning units and air distribution systems for railway vehicles
- Connection cables railway specific 0.9 m
- Printed circuit board, coated

Data sheet	A6V10636286 / A6V10636299
Torque	10 Nm
Air damper area	1.5 m²
Positioning time	90 s
Cable length	0.9 m
Degree of protection	IP54
Dimensions (W x H x D)	71 x 137 x 60.6 mm
Warranty	60 Months

Range overview GLA..1E/RW

Operating voltage [V]	Positioning signal	Power consumption [W]	Auxiliary switch	Spring return function	Stock no.	Product no.
DC 24	2-position/3-position	1.3	0	No	S55499-D220	**GLA141.1E/RW**
DC 24	2-position/3-position	1.3	0	No	S55499-D222	**GLA142.1E/RW**
DC 24	2-position/3-position	1.3	2	No	S55499-D221	**GLA146.1E/RW**
DC 24	DC0/2...10 V	1.3	0	No	S55499-D223	**GLA161.1E/RW**

Type GLA142.1E/RW has a feedback potentiometer.

Rotary air damper actuators 6 Nm, with electronic fail-save function

GNP..1E

- With self-centering shaft adapter for shaft dia. 6.4...20.5 mm, square 6.4...13 mm, min. shaft length 20 mm
- With position indication and adjustable mechanical limit stop
- With housing made of die-cast aluminium and 0.9 m connecting cable

Data sheet	N4609
Torque	6 Nm
Air damper area	1 m²
Positioning time	Opening with motor: 2 s Closing with Super Cap: 2 s
Cable length	0.9 m
Degree of protection	IP54
Dimensions (W x H x D)	81 x 192 x 63 mm
Warranty	60 Months

Range overview GNP..1E

Operating voltage [V]	Positioning signal	Power consumption	Auxiliary switch	Stock no.	Product no.
AC/DC 24	DC 0(2)...10 V 0(4)...20 mA	20 VA 13 W	0	BPZ:GNP191.1E	**GNP191.1E**
AC/DC 24	DC 0(2)...10 V 0(4)...20 mA	20 VA 13 W	2	BPZ:GNP196.1E	**GNP196.1E**

Accessories for GNP..1E

Product Title	Data sheet	Stock no.	Product no.
Accessory Kit, GEB/GMA	N4697	S55859-Z101	**ASK71.01**
Mounting Bracket, GS	N4697	S55859-Z118	**ASK71.07**
Shaft adapter, GS, square, 15mm, complete	N4697	S55859-Z104	**ASK74.13**
Shaft adapter, GS, square, 12mm	N4697	S55859-Z105	**ASK74.14**
Shaft adapter, GEB/GMA, square, 10mm, complete	N4697	S55859-Z106	**ASK74.15**
Shaft adapter, GS, square, 8mm	N4697	S55859-Z107	**ASK74.16**
Shaft adapter, GM, square, 15mm	N4699	S55859-Z108	**ASK74.17**

Air damper actuators
Fast-running damper actuators fail-in-place

GAP..1E

Rotary air damper actuators 6 Nm, without electronic fail-save function

- With self-centering shaft adapter for shaft dia. 6.4...20.5 mm, square 6.4...13 mm, min. shaft length 20 mm
- With position indication and adjustable mechanical limit stop
- Button for disengaging the gear train to enable manual control
- With housing made of die-cast aluminium and 0.9 m connecting cable

Data sheet	N4608 / A6V11991159
Torque	6 Nm
Air damper area	1 m²
Positioning time	2 s
Cable length	0.9 m
Degree of protection	IP54
Dimensions (W x H x D)	81 x 192 x 63 mm
Warranty	60 Months

Range overview GAP..1E

Operating voltage [V]	Positioning signal	Power consumption	Auxiliary switch	Stock no.	Product no.
AC/DC 24	DC 0(2)...10 V 0(4)...20 mA	30 VA 22 W	0	BPZ:GAP191.1E	**GAP191.1E**
AC/DC 24	DC 0(2)...10 V 0(4)...20 mA	30 VA 22 W	0	S55499-D838	**GAP191.1E/102**
AC/DC 24	DC 0(2)...10 V 0(4)...20 mA	20 VA 13 W	0	S55499-D639	**GAP191.1E/IHT**
AC/DC 24	DC 0(2)...10 V 0(4)...20 mA	30 VA 22 W	2	BPZ:GAP196.1E	**GAP196.1E**

Accessories for GAP..1E

Product Title	Data sheet	Stock no.	Product no.
Accessory Kit, GEB/GMA	N4697	S55859-Z101	**ASK71.01**
Mounting Bracket, GS	N4697	S55859-Z118	**ASK71.07**
Shaft adapter, GS, square, 15mm, complete	N4697	S55859-Z104	**ASK74.13**
Shaft adapter, GS, square, 12mm	N4697	S55859-Z105	**ASK74.14**
Shaft adapter, GEB/GMA, square, 10mm, complete	N4697	S55859-Z106	**ASK74.15**
Shaft adapter, GS, square, 8mm	N4697	S55859-Z107	**ASK74.16**
Shaft adapter, GM, square, 15mm	N4699	S55859-Z108	**ASK74.17**

Linear air damper actuators 125 N, without spring return

GDB..2E

- Button for disengaging the gear train to enable manual override
- With base made of steel, plastic housing and 0.9 m connecting cable

Data sheet	N4664
Force	125 N
Air damper area	0.8 m²
Nominal stroke	60 mm
Positioning time	150 s
Degree of protection	IP40
Dimensions (W x H x D)	68 x 152 x 59 mm
Warranty	60 Months

Range overview GDB..2E

Operating voltage [V]	Positioning signal	Power consumption	Auxiliary switch	Cable length [m]	Stock no.	Product no.
AC 24	3-position	2 VA 1 W	0	0.9	BPZ:GDB131.2E	**GDB131.2E**
AC 24	DC 0...10 V	3 VA 2 W	0	0.9	BPZ:GDB161.2E	**GDB161.2E**
AC 24	DC 0...35 V Adjustable	3 VA 2 W	0	0.9	BPZ:GDB163.2E	**GDB163.2E**
AC 230	3-position	2 VA 1 W	0	0.9	BPZ:GDB331.2E	**GDB331.2E**
AC 230	3-position	2 VA 1 W	2	0.9	BPZ:GDB336.2E	**GDB336.2E**

Basic Documentation No.: Z4664.

GLB..2E

Linear air damper actuators 250 N, without spring return

- Button for disengaging the gear train to enable manual override
- With base made of steel, plastic housing and 0.9 m connecting cable

Data sheet	N4664
Force	250 N
Air damper area	1.5 m²
Nominal stroke	60 mm
Positioning time	150 s
Degree of protection	IP40
Dimensions (W x H x D)	68 x 152 x 59 mm
Warranty	60 Months

Range overview GLB..2E

Operating voltage [V]	Positioning signal	Power consumption	Auxiliary switch	Cable length [m]	Stock no.	Product no.
AC 24	3-position	2 VA 1 W	0	0.9	BPZ:GLB131.2E	**GLB131.2E**
AC 24	3-position	2 VA 1 W	2	0.9	BPZ:GLB136.2E	**GLB136.2E**
AC 24	DC 0...10 V	3 VA 2 W	0	0.9	BPZ:GLB161.2E	**GLB161.2E**
AC 24	DC 0...35 V Adjustable	3 VA 2 W	0	0.9	BPZ:GLB163.2E	**GLB163.2E**
AC 230	3-position	2 VA 1 W	0	0.9	BPZ:GLB331.2E	**GLB331.2E**
AC 230	3-position	2 VA 1 W	2	0.9	BPZ:GLB336.2E	**GLB336.2E**

Basis Documentation No.: Z4664.

Accessories for linear air damper actuators GDB..2E and GLB..2E

Product Title	Data sheet	Stock no.	Product no.
Clamp for linkage (5...8 mm dia.)	N4698	BPZ:ASK55.2	**ASK55.2**
Weather shield for rotary-/linear-type actuator GDB/GLB	N4698	BPZ:ASK75.5	**ASK75.5**

Compact room automation station and actuator combination, BACnet/IP, 24 V, 1 DI, 2 UI, 1 AO, 4 triac, pressure sensor, 30 data points

DXR2.E10PL-102B

Compact room automation stations and actuator combination for HVAC, lighting, and shading:
- BACnet/IP communications
- KNX PL-Link bus to connect sensors, actuators, and operator units (including bus power)
- KNX S-Mode device integration
- Damper Actuator 10Nm
- 2-port Ethernet switch
- USB interface for Tool
- 30 data points

Data sheet	A6V11259958
Operating voltage	AC 24 V
Frequency	50/60 Hz
Power consumption	66 VA
Communication	BACnet/IP KNX PL-Link KNX S-Mode
Universal inputs, number	3
Triac outputs, number	4
Triac output, switching voltage	24 V
Triac output, switching current	0.15 A
Mounting	Directly on the damper shaft
Degree of protection	IP20
Dimensions (W x H x D)	201 x 137 x 82 mm
Warranty	24 Months

	Stock no.	Product no.
	S55376-C145	**DXR2.E10PL-102B**

9

Compact room automation station, BACnet/IP, 24 V, DIN housing, 1 DI, 2 UI, 1 AO, 4 triac, pressure sensor, 60 data points

DXR2.E10PLX-102B

Compact room automation stations for HVAC, lighting, and shading:
- BACnet/IP communications
- KNX PL-Link bus to connect sensors, actuators, and operator units (including bus power)
- KNX S-Mode device integration
- 2-port Ethernet switch
- USB interface for Tool
- 60 data points

Data sheet	A6V11259958
Operating voltage	AC 24 V
Frequency	50/60 Hz
Power consumption	66 VA
Communication	BACnet/IP KNX PL-Link KNX S-Mode
Universal inputs, number	2
Digital inputs, number	1
Analog outputs, number	1
Triac outputs, number	4
Triac output, switching voltage	24 V
Triac output, switching current	0.15 A
Mounting	Directly on the damper shaft
Degree of protection	IP20
Dimensions (W x H x D)	201 x 137 x 82 mm
Warranty	24 Months

Stock no.	Product no.
S55376-C146	**DXR2.E10PLX-102B**

9

Compact room automation stations, BACnet/IP, 24 V

DXR2.E10PL..

Compact room automation stations for HVAC, lighting, and shading:
- BACnet/IP communications
- KNX PL-Link bus to connect sensors, actuators, and operator units (including bus power)
- KNX S-Mode device integration
- 2-port Ethernet switch
- USB interface for Tool

Data sheet	A6V11259958
Operating voltage	AC 24 V
Frequency	50/60 Hz
Power consumption	Max. 66 VA
Communication	BACnet/IP KNX PL-Link KNX S-Mode
Universal inputs, number	3
Triac outputs, number	4
Triac output, switching voltage	AC 24 V
Triac output, switching current	150 mA
Degree of protection	IP20
Dimensions (W x H x D)	201 x 137 x 82 mm

Range overview DXR2.E10PL..

Product Title	Stock no.	Product no.
Compact room automation station and actuator combination, BACnet/IP, 24 V, 1 DI, 2 UI, 1 AO, 4 triac, pressure sensor, 30 data points	S55376-C145	**DXR2.E10PL-102B**
Compact room automation station, BACnet/IP, 24 V, DIN housing, 1 DI, 2 UI, 1 AO, 4 triac, pressure sensor, 60 data points	S55376-C146	**DXR2.E10PLX-102B**

Accessories for DXR2.E..

Product Title	Data sheet	Stock no.	Product no.
Crank Arm, Universal	N4697	BPZ:ASK71.9	**ASK71.9**
Centering insert D-profile fixed 12 mm dia. × 9 mm	N4698	BPZ:ASK78.12	**ASK78.12**
Air tube connection kit 50mm DXA.T50		S55499-D500	**DXA.T50**
Insert for small shaft dia.	N4698	BPZ:ASK78.3	**ASK78.3**
Centering insert 12.7 mm dia. (½")	N4698	BPZ:ASK78.5	**ASK78.5**
Centering insert 8 mm square	N4698	BPZ:ASK78.6	**ASK78.6**
Centering insert 10 mm square	N4698	BPZ:ASK78.7	**ASK78.7**
Centering insert 10 mm dia.	N4698	BPZ:ASK78.9	**ASK78.9**
Centering insert 12 mm dia.	N4698	BPZ:ASK78.10	**ASK78.10**
Centering insert 8 mm square	N4698	BPZ:ASK78.14	**ASK78.14**

DXR2.M10PL..

Compact room automation station, BACnet/MSTP, 24 V

Compact room automation stations for HVAC, lighting, and shading:
- BACnet/MSTP communications
- KNX PL-Link bus to connect sensors, actuators, and operator units (including bus power)
- USB interface for Tool

Data sheet	A6V11259964
Operating voltage	AC 24 V
Frequency	50/60 Hz
Power consumption	Max. 58 VA
Universal inputs, number	2
Digital inputs, number	1
Analog outputs, number	2
Analog output, signal	DC 0...10 V
Analog output, current	1 mA
Triac outputs, number	4
Triac output, switching voltage	AC 24 V
Triac output, switching current	250 mA
Degree of protection	IP20
Dimensions (W x H x D)	201 x 137 x 99 mm

Range overview DXR2.M10PL..

Product Title	Stock no.	Product no.
Compact room automation station and actuator combination, BACnet/MSTP, 24 V, 1 DI, 2 UI, 1 AO, 4 triac, pressure sensor, 30 data points	S55376-C147	**DXR2.M10PL-102B**
Compact room automation station, BACnet/MSTP, 24 V, DIN housing, 1 DI, 2 UI, 1 AO, 4 triac, pressure sensor, 60 data points	S55376-C148	**DXR2.M10PLX-102B**

Accessories for DXR2.M..

Product Title	Data sheet	Stock no.	Product no.
Crank Arm, Universal	N4697	BPZ:ASK71.9	**ASK71.9**
Centering insert D-profile fixed 12 mm dia. × 9 mm	N4698	BPZ:ASK78.12	**ASK78.12**
Air tube connection kit 50mm DXA.T50		S55499-D500	**DXA.T50**
Insert for small shaft dia.	N4698	BPZ:ASK78.3	**ASK78.3**
Centering insert 12.7 mm dia. (½")	N4698	BPZ:ASK78.5	**ASK78.5**
Centering insert 8 mm square	N4698	BPZ:ASK78.6	**ASK78.6**
Centering insert 10 mm square	N4698	BPZ:ASK78.7	**ASK78.7**
Centering insert 10 mm dia.	N4698	BPZ:ASK78.9	**ASK78.9**
Centering insert 12 mm dia.	N4698	BPZ:ASK78.10	**ASK78.10**
Centering insert 8 mm square	N4698	BPZ:ASK78.14	**ASK78.14**

Compact actuating room automation station DXR1.E09PDZ-..

DXR1.E09PDZ..

- Compact, configurable room automation station in combination with actuator for HVAC
- BACnet IP communications (BTL certified)
- 2-port Ethernet switch
- USB interface
- Operating voltage AC 24 V
- Built-in 5 Nm or 10 Nm actuator
- Internal 0...500 Pa differential pressure sensor
- Plug-in terminal blocks

Data sheet	A6V11393931
Operating voltage	AC 24 V +/-20 %
Frequency	50/60 Hz
Power consumption	Max. 7.5 VA
Communication	BACnet IP
Max. cable length	30 m
Digital outputs, number	4
Analog outputs, number	1
Degree of protection	IP20
Dimensions (W x H x D)	143.1 x 83.6 x 137 mm
Warranty	24 Months

Range overview DXR1.E09PDZ..

Product Title	Stock no.	Product no.
Compact, configurable room automation station and actuator combination, BACnet/IP, 5 Nm, 24 V, 2 UI, 1 AO, 4 triac, pressure sensor, VAV044	S55499-D456	**DXR1.E09PDZ-112**
Compact, configurable room automation station and actuator combination, BACnet/IP, 5 Nm, 24 V, 2 UI, 1 AO, 4 triac, pressure sensor, VAV044, CA engineering unit	S55499-D788	**DXR1.E09PDZ-112/CA**
Compact, configurable room automation station and actuator combination, BACnet/IP, 5 Nm, 24 V, 2 UI, 1 AO, 4 triac, pressure sensor, FPB052	S55499-D457	**DXR1.E09PDZ-113**
Compact, configurable room automation station and actuator combination, BACnet/IP, 10 Nm, 24 V, 2 UI, 1 AO, 4 triac, pressure sensor, VAV044	S55499-D742	**DXR1.E09PLZ-112**

Compact, configurable room automation station and actuator combination, BACnet/IP, 24 V, pressure sensor, VAV011 (VAV012)

DXR1.E02PLZ-112

- Combination of compact room automation station and actuator for VAV control
- BACnet IP communications (BTL certified)
- 2-port Ethernet switch
- USB interface
- Operating voltage AC 24 V
- Built-in 10 Nm actuator
- Internal 0...500 Pa differential pressure sensor
- Plug-in terminal blocks

Data sheet	A6V11393935
Operating voltage	AC 19.2...28.8 V 24 V
Frequency	50/60 Hz
Power consumption	7 VA
Communication	BACnet IP
Max. cable length	30 m
Mounting	Directly on the damper shaft
Degree of protection	IP20
Dimensions (W x H x D)	143.1 x 83.6 x 137 mm
Warranty	24 Months

	Stock no.	Product no.
	S55499-D460	**DXR1.E02PLZ-112**

DXR1.E10PL..

Compact actuating room automation station DXR1.E10PL-..

- Compact, configurable room automation station in combination with actuator for HVAC
- BACnet IP communications (BTL certified)
- 2-port Ethernet switch
- USB interface
- KNX PL-Link bus to connect sensors, actuators, and operator units (including bus power)
- Operating voltage AC 24 V
- Built-in 10 Nm actuator
- Internal 0...500 Pa differential pressure sensor
- Plug-in terminal blocks

Data sheet	A6V11393933
Operating voltage	AC 24 V +/-20 %
Frequency	50/60 Hz
Power consumption	Max. 12 VA
Communication	BACnet IP
Max. cable length	30 m
Digital outputs, number	4
Analog outputs, number	1
Degree of protection	IP20
Dimensions (W x H x D)	143.1 x 83.6 x 137 mm
Warranty	24 Months

Range overview DXR1.E10PL..

Product Title	Stock no.	Product no.
Compact, configurable room automation station and actuator combination, BACnet/IP, 24 V, 1 DI, 2 UI, 1 AO, 4 triac, pressure sensor, VAV045	S55499-D458	**DXR1.E10PL-112**
Compact, configurable room automation station and actuator combination, BACnet/IP, 24 V, 1 DI, 2 UI, 1 AO, 4 triac, pressure sensor, VAV045 US engineering unit	S55499-D789	**DXR1.E10PL-112/US**
Compact, configurable room automation station and actuator combination, BACnet/IP, 24 V, 1 DI, 2 UI, 1 AO, 4 triac, pressure sensor, FPB053	S55499-D459	**DXR1.E10PL-113**
Compact, configurable room automation station and actuator combination, BACnet/IP, 24 V, 1 DI, 2 UI, 1 AO, 4 triac, pressure sensor, FPB053, US engineering unit	S55499-D790	**DXR1.E10PL-113/US**

Accessories for DXR1.E..

Product Title	Data sheet	Stock no.	Product no.
Crank Arm, Universal	N4697	BPZ:ASK71.9	**ASK71.9**
Centering insert D-profile fixed 12 mm dia. × 9 mm	N4698	BPZ:ASK78.12	**ASK78.12**
Air tube connection kit 50mm DXA.T50		S55499-D500	**DXA.T50**
Insert for small shaft dia.	N4698	BPZ:ASK78.3	**ASK78.3**
Centering insert 12.7 mm dia. (½")	N4698	BPZ:ASK78.5	**ASK78.5**
Centering insert 8 mm square	N4698	BPZ:ASK78.6	**ASK78.6**
Centering insert 10 mm square	N4698	BPZ:ASK78.7	**ASK78.7**
Centering insert 10 mm dia.	N4698	BPZ:ASK78.9	**ASK78.9**
Centering insert 12 mm dia.	N4698	BPZ:ASK78.10	**ASK78.10**
Centering insert 8 mm square	N4698	BPZ:ASK78.14	**ASK78.14**

DXR1.M09PDZ..

Compact actuating room automation station DXR1.M09PDZ-..

- Compact, configurable room automation station in combination with actuator for HVAC
- BACnet MS/TP communications (BTL certified)
- USB interface
- Operating voltage AC 24 V
- Built-in 5 Nm or 10 Nm actuator
- Internal 0...500 Pa differential pressure sensor
- Plug-in terminal blocks

Data sheet	A6V11393929
Operating voltage	AC 24 V +/-20 %
Frequency	50/60 Hz
Power consumption	Max. 5.5 VA
Communication	BACnet MS/TP
Max. cable length	30 m
Universal inputs, number	2
Digital outputs, number	4
Analog outputs, number	1
Degree of protection	IP20
Dimensions (W x H x D)	143.1 x 83.6 x 137 mm
Warranty	24 Months

Range overview DXR1.M09PDZ..

Product Title	Stock no.	Product no.
Compact, configurable room automation station and actuator combination, BACnet/MSTP, 5 Nm, 24 V, 2 UI, 1 AO, 4 triac, pressure sensor, VAV044	S55499-D462	**DXR1.M09PDZ-112**
Open Air Intelligent VAV 44 lb-in BACnet MS/TP	S55499-D844	**DXR1.M09PDZ-112/US**
Compact, configurable room automation station and actuator combination, BACnet/MSTP, 5 Nm, 24 V, 2 UI, 1 AO, 4 triac, pressure sensor, FPB052	S55499-D463	**DXR1.M09PDZ-113**
Intelligent Variable Air Volume Actuator (FPB) DXR1.M09PDZ-..	S55499-D845	**DXR1.M09PDZ-113/US**
Compact, configurable room automation station and actuator combination, BACnet/MSTP, 10 Nm, 24 V, 2 UI, 1 AO, 4 triac, pressure sensor, VAV044	S55499-D741	**DXR1.M09PLZ-112**

Accessories for DXR1.M..

Product Title	Data sheet	Stock no.	Product no.
Crank Arm, Universal	N4697	BPZ:ASK71.9	**ASK71.9**
Centering insert D-profile fixed 12 mm dia. × 9 mm	N4698	BPZ:ASK78.12	**ASK78.12**
Air tube connection kit 50mm DXA.T50		S55499-D500	**DXA.T50**
Insert for small shaft dia.	N4698	BPZ:ASK78.3	**ASK78.3**
Centering insert 12.7 mm dia. (½")	N4698	BPZ:ASK78.5	**ASK78.5**
Centering insert 8 mm square	N4698	BPZ:ASK78.6	**ASK78.6**
Centering insert 10 mm square	N4698	BPZ:ASK78.7	**ASK78.7**
Centering insert 10 mm dia.	N4698	BPZ:ASK78.9	**ASK78.9**
Centering insert 12 mm dia.	N4698	BPZ:ASK78.10	**ASK78.10**
Centering insert 8 mm square	N4698	BPZ:ASK78.14	**ASK78.14**

VAV compact controller KNX

G..B181.1E/KN

- Compact controller with KNX communication for plants with variable or constant air volume flow
- Integrated, highly precise differential pressure sensor, damper actuator and digitally configurable air volume controller
- Nominal torque 5 or 10 Nm
- Air damper rotation angle mechanically adjustable between 0 and 90°
- Configurable as single device per room or for cascade control with pressure ratio 1:1, positive pressure, or negative pressure
- Prewired with a 0.9 m cable and a 0.9 m cable

Data sheet	N3547
Positioning time	150 s
Communication	KNX S-Mode KNX LTE-Mode KNX PL-Link
Cable length	0.9 m
Degree of protection	IP54
Dimensions (W x H x D)	71 x 158 x 61 mm
Warranty	60 Months

Range overview G..B181.1E/KN

Torque [Nm]	Operating voltage [V]	Air damper area [m²]	Power consumption	Stock no.	Product no.
5	AC 24	0.8	3 VA 2.5 W	S55499-D134	**GDB181.1E/KN**
5	AC 24	0.8	3 VA 2.5 W	S55499-D424	**GDB181.1GMKW 1**
5	AC 24	0.8	3 VA 2.5 W	S55499-D505	**GDB181.1EMKN**
10	AC 24	1.5	3 VA 2.5 W	S55499-D135	**GLB181.1E/KN**
10	AC 24	1.5	3 VA 2.5 W	S55499-D263	**GLB181.1EMKN**

GDB181.EMKN packaging unit 18 pieces.
Basic Documentation No.: P3547

Accessories for G..B181.1E/KN

Product Title	Data sheet	Stock no.	Product no.
Connection cable (VAV, AST20) with 3-pole connector and ferrules, 1 m	N4698	BPZ:7442401250	**7442401250**
Connection cable (VAV, AST20) with 3-pole connector and 7-pole plug, 2.5 m	N4698	BPZ:7442403010	**7442403010**
Rotary/linear mounting kit	N4698	BPZ:ASK71.5	**ASK71.5**
Rotary/linear mounting kit with bracket	N4698	BPZ:ASK71.6	**ASK71.6**
Crank Arm, Universal	N4697	BPZ:ASK71.9	**ASK71.9**
Centering insert D-profile fixed 12 mm dia. × 9 mm	N4698	BPZ:ASK78.12	**ASK78.12**
Handheld tool for VAV compact controllers	A6V10631836	S55499-D165	**AST20**
Interface Converter USB/PPS2	A6V11236956	S55499-D373	**AST22**
Insert for small shaft dia.	N4698	BPZ:ASK78.3	**ASK78.3**
Weather shield for rotary-/linear-type actuator GDB/GLB	N4698	BPZ:ASK75.5	**ASK75.5**
Centering insert 12.7 mm dia. (½")	N4698	BPZ:ASK78.5	**ASK78.5**
Centering insert 8 mm square	N4698	BPZ:ASK78.6	**ASK78.6**
Centering insert 10 mm square	N4698	BPZ:ASK78.7	**ASK78.7**
Centering insert 10 mm dia.	N4698	BPZ:ASK78.9	**ASK78.9**
Centering insert 12 mm dia.	N4698	BPZ:ASK78.10	**ASK78.10**
Centering insert 8 mm square	N4698	BPZ:ASK78.14	**ASK78.14**

G..B181.1E/BA

VAV compact controller BACnet

- Networked compact controller with BACnet MS/TP (BTL-listed) communication for plants with variable or constant air volume flow
- Integrated, highly precise differential pressure sensor, damper actuator and digitally configurable air volume controller
- Nominal torque 5 or 10 Nm
- Air damper rotation angle mechanically adjustable between 0 and 90°
- Configurable as single device per room or for cascade control with pressure ratio 1:1, positive pressure, or negative pressure
- Prewired with a 0.9 m connecting cable and a 0.9 m bus cable

Data sheet	A6V10631834
Positioning time	150 s
Communication	BACnet MS/TP
Cable length	0.9 m
Degree of protection	IP54
Dimensions (W x H x D)	71 x 158 x 61 mm
Warranty	60 Months

Range overview G..B181.1E/BA

Torque [Nm]	Operating voltage [V]	Air damper area [m²]	Power consumption	Stock no.	Product no.
10	AC 24	1.5	3 VA 2.5 W	S55499-D169	**GLB181.1E/BA**

GDB181.EMBA packaging unit 18 pieces

Accessories for G..B181.1E/BA

Product Title	Data sheet	Stock no.	Product no.
Connection cable (VAV, AST20) with 3-pole connector and ferrules, 1 m	N4698	BPZ:7442401250	**7442401250**
Connection cable (VAV, AST20) with 3-pole connector and 7-pole plug, 2.5 m	N4698	BPZ:7442403010	**7442403010**
Rotary/linear mounting kit	N4698	BPZ:ASK71.5	**ASK71.5**
Rotary/linear mounting kit with bracket	N4698	BPZ:ASK71.6	**ASK71.6**
Crank Arm, Universal	N4697	BPZ:ASK71.9	**ASK71.9**
Centering insert D-profile fixed 12 mm dia. × 9 mm	N4698	BPZ:ASK78.12	**ASK78.12**
Handheld tool for VAV compact controllers	A6V10631836	S55499-D165	**AST20**
Interface Converter USB/PPS2	A6V11236956	S55499-D373	**AST22**
Insert for small shaft dia.	N4698	BPZ:ASK78.3	**ASK78.3**
Weather shield for rotary-/linear-type actuator GDB/GLB	N4698	BPZ:ASK75.5	**ASK75.5**
Centering insert 12.7 mm dia. (½")	N4698	BPZ:ASK78.5	**ASK78.5**
Centering insert 8 mm square	N4698	BPZ:ASK78.6	**ASK78.6**
Centering insert 10 mm square	N4698	BPZ:ASK78.7	**ASK78.7**
Centering insert 10 mm dia.	N4698	BPZ:ASK78.9	**ASK78.9**
Centering insert 12 mm dia.	N4698	BPZ:ASK78.10	**ASK78.10**
Centering insert 8 mm square	N4698	BPZ:ASK78.14	**ASK78.14**

VAV compact controller Modbus

G..B181.1E/MO

- Networked compact controller with Modbus RTU communication for plants with variable or constant air volume flow
- Integrated, highly precise differential pressure sensor, damper actuator and digitally configurable air volume controller
- Nominal torque 5 or 10 Nm
- Air damper rotation angle mechanically adjustable between 0 and 90°
- Configurable as single device per room or for cascade control with pressure ratio 1:1, positive pressure, or negative pressure
- Prewired with a 0.9 m connecting cable and a 0.9 m bus cable

Data sheet	A6V10631832
Positioning time	150 s
Communication	Modbus RTU
Cable length	0.9 m
Degree of protection	IP54
Dimensions (W x H x D)	71 x 158 x 61 mm
Warranty	60 Months

Range overview G..B181.1E/MO

Torque [Nm]	Operating voltage [V]	Air damper area [m²]	Power consumption	Stock no.	Product no.
5	AC 24	0.8	3 VA 2.5 W	S55499-D166	**GDB181.1E/MO**
5	AC 24	0.8	3 VA 2.5 W	S55499-D841	**GDB181.1EMMO**
10	AC 24	1.5	3 VA 2.5 W	S55499-D167	**GLB181.1E/MO**

Accessories for G..B181.1E/MO

Product Title	Data sheet	Stock no.	Product no.
Connection cable (VAV, AST20) with 3-pole connector and ferrules, 1 m	N4698	BPZ:7442401250	**7442401250**
Connection cable (VAV, AST20) with 3-pole connector and 7-pole plug, 2.5 m	N4698	BPZ:7442403010	**7442403010**
Rotary/linear mounting kit	N4698	BPZ:ASK71.5	**ASK71.5**
Rotary/linear mounting kit with bracket	N4698	BPZ:ASK71.6	**ASK71.6**
Crank Arm, Universal	N4697	BPZ:ASK71.9	**ASK71.9**
Centering insert D-profile fixed 12 mm dia. × 9 mm	N4698	BPZ:ASK78.12	**ASK78.12**
Handheld tool for VAV compact controllers	A6V10631836	S55499-D165	**AST20**
Interface Converter USB/PPS2	A6V11236956	S55499-D373	**AST22**
Insert for small shaft dia.	N4698	BPZ:ASK78.3	**ASK78.3**
Weather shield for rotary-/linear-type actuator GDB/GLB	N4698	BPZ:ASK75.5	**ASK75.5**
Centering insert 12.7 mm dia. (½")	N4698	BPZ:ASK78.5	**ASK78.5**
Centering insert 8 mm square	N4698	BPZ:ASK78.6	**ASK78.6**
Centering insert 10 mm square	N4698	BPZ:ASK78.7	**ASK78.7**
Centering insert 10 mm dia.	N4698	BPZ:ASK78.9	**ASK78.9**
Centering insert 12 mm dia.	N4698	BPZ:ASK78.10	**ASK78.10**
Centering insert 8 mm square	N4698	BPZ:ASK78.14	**ASK78.14**

G..B181.1E/3

VAV compact controller

- Compact controller for plants with variable or constant air volume flow
- Integrated, highly precise differential pressure sensor, damper actuator and digitally configurable air volume controller
- Nominal torque 5 or 10 Nm
- Air damper rotation angle mechanically adjustable between 0 and 90°
- Forced close-off function in DC 2...10 V operation
- Optionally configurable as VAV compact controller or as damper actuator/differential pressure sensor unit
- Prewired with a 0.9 m connecting cable

Data sheet	N3544
Positioning time	150 s
Positioning signal	DC 0...10 V DC 2...10 V 3-position
Degree of protection	IP54
Dimensions (W x H x D)	71 x 158 x 61 mm
Warranty	60 Months

Range overview G..B181.1E/3

Torque [Nm]	Operating voltage [V]	Air damper area [m²]	Power consumption	Auxiliary switch	Cable length [m]	Stock no.	Product no.
5	AC 24	0.8	3 VA 2.5 W	0	0.9	BPZ:GDB181.1E/3	**GDB181.1E/3**
5	AC 24	0.8	3 VA 2.5 W	0	2.5	S55499-D900	**GDB181.1G/3**
10	AC 24	1.5	3 VA 2.5 W	0	0.9	BPZ:GLB181.1E/3	**GLB181.1E/3**
	AC 24		3 VA			BPZ:GLB181.1EM3	**GLB181.1EM3**

Basic Documentation No.: P3544.

Accessories for G..B181.1E/3

Product Title	Data sheet	Stock no.	Product no.
Connection cable (VAV, AST20) with 3-pole connector and ferrules, 1 m	N4698	BPZ:7442401250	**7442401250**
Connection cable (VAV, AST20) with 3-pole connector and 6-pole plug, 2.5 m	N4698	BPZ:7442401260	**7442401260**
Connection cable (VAV, AST20) with 3-pole connector and 7-pole plug, 2.5 m	N4698	BPZ:7442403010	**7442403010**
Rotary/linear mounting kit	N4698	BPZ:ASK71.5	**ASK71.5**
Rotary/linear mounting kit with bracket	N4698	BPZ:ASK71.6	**ASK71.6**
Crank Arm, Universal	N4697	BPZ:ASK71.9	**ASK71.9**
Centering insert D-profile fixed 12 mm dia. × 9 mm	N4698	BPZ:ASK78.12	**ASK78.12**
Handheld tool for VAV compact controllers	A6V10631836	S55499-D165	**AST20**
Interface Converter USB/PPS2	A6V11236956	S55499-D373	**AST22**
Insert for small shaft dia.	N4698	BPZ:ASK78.3	**ASK78.3**
Weather shield for rotary-/linear-type actuator GDB/GLB	N4698	BPZ:ASK75.5	**ASK75.5**
Centering insert 12.7 mm dia. (½")	N4698	BPZ:ASK78.5	**ASK78.5**
Centering insert 8 mm square	N4698	BPZ:ASK78.6	**ASK78.6**
Centering insert 10 mm square	N4698	BPZ:ASK78.7	**ASK78.7**
Centering insert 10 mm dia.	N4698	BPZ:ASK78.9	**ASK78.9**
Centering insert 12 mm dia.	N4698	BPZ:ASK78.10	**ASK78.10**
Centering insert 8 mm square	N4698	BPZ:ASK78.14	**ASK78.14**

VAV modular controller

ASV181.1E/3

- Modular controller for plants with variable or constant air volume flow
- Integrated, highly precise differential pressure sensor and digitally configurable air volume controller
- For connection to an OpenAir™ family 3-position air damper actuator with high torque or safety functions
- Prewired with a 0.9 m cable and a 0.3 m connecting cable

Data sheet	N3545
Angular rotation	90°
Power consumption	1 VA 0.5 W
Positioning time	150 s
Positioning signal	DC 0...10 V DC 2...10 V 3-position
Degree of protection	IP40
Medium temperature	0...50 °C
Ambient humidity, operation	95 % r.h.
Dimensions (W x H x D)	68 x 144 x 45 mm
Operating voltage	AC 24 V
Warranty	60 Months

	Stock no.	Product no.
	BPZ:ASV181.1E/3	**ASV181.1E/3**

Accessories for ASV181.1E/3

Product Title	Data sheet	Stock no.	Product no.
Connection cable (VAV, AST20) with 3-pole connector and ferrules, 1 m	N4698	BPZ:7442401250	**7442401250**
Connection cable (VAV, AST20) with 3-pole connector and 7-pole plug, 2.5 m	N4698	BPZ:7442403010	**7442403010**
Handheld tool for VAV compact controllers	A6V10631836	S55499-D165	**AST20**
Interface Converter USB/PPS2	A6V11236956	S55499-D373	**AST22**

Actuators for fire and smoke protection dampers
Fire damper actuators

GRA..26.1E

Actuators for fire protection dampers

- Rotary type
- 2-position
- Spring return to failsafe position
- Temperature monitoring unit (for 72 °C)
- Fixed auxiliary switches for switching points 5 ° and 80 °
- Type ../..A have adjustable end position switches
- Rigid connection between actuator and damper square shafts (10x10, 12x12)
- Manual setting
- Position indicator
- Robust, lightweight all metal housing made from die-cast aluminium and 0.9 m connecting cable
- Degree of protection: Temperature monitoring unit IP54 / Actuator IP54

Data sheet	A6V10888424
Torque	4 Nm
Air damper area	0.6 m²
Positioning time	Open with motor: 90 s Close with spring return: 15 s
Connection cable	Supply: 2 x 0.75 mm² / auxiliary switch: 6 x 0.75 mm²
Medium temperature	≤72 °C
Dimensions (W x H x D)	81 x 178 x 63 mm
Warranty	60 Months

Range overview GRA..26.1E

Operating voltage [V]	Positioning signal	Power consumption	Cable length [m]	Shaft linkage [mm]	Stock no.	Product no.
AC/DC 24	2-position	5 VA 3.5 W	0.9	10 x 10	S55499-D294	**GRA126.1E/10**
AC/DC 24	2-position	5 VA 3.5 W	0.9	12 x 12	S55499-D507	**GRA126.1E/12A**
AC/DC 24	2-position	5 VA 3.5 W	0.9	12 x 12	S55499-D566	**GRA126.1E/C12**
AC 230	2-position	7 VA 4.5 W	0.9	12 x 12	S55499-D674	**GRA326.1E/12A**
AC 230	2-position	7 VA 4.5 W	0.9	10 x 10	S55499-D295	**GRA326.1E/10**
AC/DC 24	2-position	5 VA 3.5 W	0.9	12 x 12	S55499-D296	**GRA126.1E/12**
AC 230	2-position	7 VA 4.5 W	0.9	12 x 12	S55499-D297	**GRA326.1E/12**
AC/DC 24	2-position	5 VA 3.5 W	0.9	10 x 10	S55499-D290	**GRA126.1E/T10**
AC 230	2-position	7 VA 4.5 W	0.9	10 x 10	S55499-D291	**GRA326.1E/T10**
AC/DC 24	2-position	5 VA 3.5 W	0.9	12 x 12	S55499-D292	**GRA126.1E/T12**
AC 230	2-position	7 VA 4.5 W	0.9	12 x 12	S55499-D293	**GRA326.1E/T12**

The 2 final figures of the classification correspond to the square of axis in mm.
Types GRA../T10 and GRA../T12 are equipped with a temperature monitoring unit.
Types ../C.. have cables with AMP plugs.
Types ../..A have adjustable end position switches.

Accessories for GRA..26.1E

Product Title	Data sheet	Stock no.	Product no.
Accessory Kit, GEB/GMA	N4697	S55859-Z101	**ASK71.01**
Mounting Bracket, GS	N4697	S55859-Z118	**ASK71.07**
Turnkey for manual adjustment	N4697	S55859-Z122	**ASK71.20**
Shaft adapter, GS, square, 15mm, complete	N4697	S55859-Z104	**ASK74.13**
Shaft adapter, GS, square, 12mm	N4697	S55859-Z105	**ASK74.14**
Shaft adapter, GEB/GMA, square, 10mm, complete	N4697	S55859-Z106	**ASK74.15**
Shaft adapter, GS, square, 8mm	N4697	S55859-Z107	**ASK74.16**
Duct tip for temperature monitor unit (72 °C)	N4697	BPZ:ASK79.4	**ASK79.4**
Duct tip for temperature monitor unit (95 °C)	N4697	BPZ:ASK79.5	**ASK79.5**

Actuators for fire and smoke protection dampers
Fire damper actuators

GNA..26.1E

Actuators for fire protection dampers

- Rotary type
- 2-position (Type GNA166.1E.. has a modulating DC 0/2...10V positioning signal)
- Spring return to failsafe position
- Temperature monitoring unit (for 72 °C) (Type GNA..26.1E/H.. are for 95°C)
- Fixed auxiliary switches for switching points 5 ° and 80 ° (Type GNA..26.1E/..A have adjustable end position switches)
- Rigid connection between actuator and damper square shafts (10 x 10, 12 x 12)
- Manual setting
- Position indicator
- Robust, lightweight all metal housing made from die-cast aluminium and 0.9 m connecting cable
- Degree of protection: Temperature monitoring unit IP54 / Actuator IP54

Data sheet	N4620
Torque	9 Nm
Air damper area	1 m²
Positioning time	Open with motor: 90 s Close with spring return: 15 s
Connection cable	Supply: 2 x 0.75 mm² / auxiliary switch: 6 x 0.75 mm²
Degree of protection	IP54
Dimensions (W x H x D)	81 x 178 x 63 mm
Warranty	60 Months

Range overview GNA..26.1E with or without temperature monitoring unit

Operating voltage [V]	Positioning signal	Power consumption	Shaft linkage [mm]	Stock no.	Product no.
AC/DC 24	2-position	5 VA 3.5 W	10 x 10	BPZ:GNA126.1E/10	**GNA126.1E/10**
AC 24 DC 24...48	DC 0..10 V	5 VA 3.5 W	12 x 12	S55499-D496	**GNA166.1E/T12**
AC 230	2-position	7 VA 4.5 W	10 x 10	BPZ:GNA326.1E/10	**GNA326.1E/10**
AC/DC 24	2-position	5 VA 3.5 W	10 x 10	BPZ:GNA126.1E/C10	**GNA126.1E/C10**
AC 24 DC 24	2-position	5 VA 3.5 W	12 x 12	BPZ:GNA126.1E/C12	**GNA126.1E/C12**
AC/DC 24	2-position	7 VA 4.5 W	12 x 12	S55499-D447	**GNA126.1E/12A**
AC 24 DC 24	2-position	7 VA 4.5 W	12 x 12	S55499-D182	**GNA126.1E/H12**
AC 230	2-position	7 VA 4.5 W	12 x 12	S55499-D448	**GNA326.1E/12A**
AC/DC 24	2-position	5 VA 3.5 W	12 x 12	BPZ:GNA126.1E/12	**GNA126.1E/12**
AC 230	2-position	7 VA 4.5 W	12 x 12	BPZ:GNA326.1E/12	**GNA326.1E/12**
AC/DC 24	2-position	5 VA 3.5 W	10 x 10	BPZ:GNA126.1E/T10	**GNA126.1E/T10**

Range overview GNA..26.1E with or without temperature monitoring unit

Operating voltage [V]	Positioning signal	Power consumption	Shaft linkage [mm]	Stock no.	Product no.
AC 230	2-position	7 VA 4.5 W	10 x 10	BPZ:GNA326.1E/T10	**GNA326.1E/T10**
AC/DC 24	2-position	7 VA 4.5 W	12 x 12	BPZ:GNA126.1E/T12	**GNA126.1E/T12**
AC 230	2-position	7 VA 4.5 W	12 x 12	BPZ:GNA326.1E/T12	**GNA326.1E/T12**

The 2 final figures of the classification correspond to the square of axis in mm.
Types GNA../T10 and GNA../T12 are equipped with a temperature monitoring unit.
Types ../C.. have cables with AMP plugs.
Types ../..A have adjustable end position switches.
Type../H.. has a 95°C temperature monitoring unit.

Accessories for GNA..26.1E

Product Title	Data sheet	Stock no.	Product no.
Accessory Kit, GEB/GMA	N4697	S55859-Z101	**ASK71.01**
Mounting Bracket, GS	N4697	S55859-Z118	**ASK71.07**
Turnkey for manual adjustment	N4697	S55859-Z122	**ASK71.20**
Shaft adapter, GS, square, 15mm, complete	N4697	S55859-Z104	**ASK74.13**
Shaft adapter, GS, square, 12mm	N4697	S55859-Z105	**ASK74.14**
Shaft adapter, GEB/GMA, square, 10mm, complete	N4697	S55859-Z106	**ASK74.15**
Shaft adapter, GS, square, 8mm	N4697	S55859-Z107	**ASK74.16**
Duct tip for temperature monitor unit (72 °C)	N4697	BPZ:ASK79.4	**ASK79.4**
Duct tip for temperature monitor unit (95 °C)	N4697	BPZ:ASK79.5	**ASK79.5**

Actuators for fire and smoke protection dampers
Fire damper actuators

GGA..26.1E

Actuators for fire protection dampers

- Rotary type
- 2-position
- Spring return to failsafe position
- Temperature monitoring unit (for 72 °C)
- Fixed auxiliary switches for switching points 5 ° and 80 °
- Rigid connection between actuator and damper square shafts (10 x 10, 12 x 12)
- Manual setting
- Position indicator
- Robust, lightweight all metal housing made from die-cast aluminium and 0.9 m connecting cable
- Degree of protection: Temperature monitoring unit IP54 / Actuator IP54

Data sheet	N4617
Torque	18 Nm
Air damper area	2.5 m²
Positioning time	Open with motor: 90 s Close with spring return 15 s
Connection cable	Supply: 2 x 0.75 mm² / auxiliary switch: 6 x 0.75 mm²
Degree of protection	IP54
Medium temperature	≤72 °C
Dimensions (W x H x D)	100 x 264 x 71 mm
Warranty	60 Months

Range overview GGA..26.1E with or without temperature monitoring unit

Operating voltage [V]	Positioning signal	Power consumption	Shaft linkage [mm]	Stock no.	Product no.
AC/DC 24	2-position	7 VA 5 W	10 x 10	BPZ:GGA126.1E/10	**GGA126.1E/10**
AC/DC 24	2-position	7 VA 5 W	12 x 12	BPZ:GGA126.1E/12	**GGA126.1E/12**
AC/DC 24	2-position	7 VA 5 W	10 x 10	BPZ:GGA126.1E/C10	**GGA126.1E/C10**
AC/DC 24	2-position	7 VA 5 W	12 x 12	BPZ:GGA126.1E/C12	**GGA126.1E/C12**
AC 230	2-position	8 VA 6 W	10 x 10	BPZ:GGA326.1E/10	**GGA326.1E/10**
AC 230	2-position	8 VA 6 W	12 x 12	BPZ:GGA326.1E/12	**GGA326.1E/12**
AC/DC 24	2-position	7 VA 5 W	10 x 10	BPZ:GGA126.1E/T10	**GGA126.1E/T10**
AC 230	2-position	8 VA 6 W	10 x 10	BPZ:GGA326.1E/T10	**GGA326.1E/T10**
AC/DC 24	2-position	7 VA 5 W	12 x 12	BPZ:GGA126.1E/T12	**GGA126.1E/T12**
AC 230	2-position	8 VA 6 W	12 x 12	BPZ:GGA326.1E/T12	**GGA326.1E/T12**

The 2 final figures of the classification correspond to the square of axis in mm.
Types GGA../T10 and GGA../T12 are equipped with a temperature monitoring unit.
Types ../C.. have cables with AMP plugs.

Accessories for GGA..26.1E

Product Title	Data sheet	Stock no.	Product no.
Standard Shaft Adapter, GM	N4699	S55859-Z117	**ASK71.06**
Turnkey for manual adjustment	N4699	S55859-Z121	**ASK71.19**
Shaft adapter, GM, square, 15mm	N4699	S55859-Z108	**ASK74.17**
Shaft adapter, GM, square, 12mm	N4699	S55859-Z109	**ASK74.18**
Shaft adapter, GM, square, 10mm	N4699	S55859-Z110	**ASK74.19**

Accessories for GGA..26.1E

Product Title	Data sheet	Stock no.	Product no.
Shaft adapter, GM, square, 8mm	N4699	S55859-Z111	**ASK74.20**
Duct tip for temperature monitor unit (72 °C)	N4697	BPZ:ASK79.4	**ASK79.4**
Duct tip for temperature monitor unit (95 °C)	N4697	BPZ:ASK79.5	**ASK79.5**
Accessory Kit, GIB/GBB/GCA	N4699	S55859-Z102	**ASK71.02**
Mounting Bracket, GM	N4699	S55859-Z114	**ASK71.03**

Variable speed drives

Overview and selection tools		692
Variable Speed Drives for HVAC Applications	G120P..	695
	Accessories and spare parts for G120P..	699

Order instruction

G120P Bundle		order separately
Control Unit CU230P-2-BT incl. shield connection kit	**Power Module** PM230 3 AC 380 ... 480 V 0.75 ... 75 kW (IP20) 0.75 ... 90 kW (IP55)	**Operator panel** IOP-2-BT Intelligent Operator Panel or BOP-2 Basic Operator Panel or SAM Smart Access Module or Blanking cover

Optional accessory	Spare parts
CU230P-2 DP (PROFIBUS DP) CU230P-2 CAN (CANopen) CU230P-2 PN (PROFINET IO) Air guide sheets Door mounting kits	Small mounting parts Fan units

Power range G120P

		Dimension / WxHxD			
		IP55		IP20	
kW	Frame size	Filter A	Filter B	Filter A	Filter B
0.75	A	154x460x249	154x460x249	73x196x223	73x202x288
1.1	A	154x460x249	154x460x249	73x196x223	73x202x288
1.5	A	154x460x249	154x460x249	73x196x223	73x202x288
2.2	A	154x460x249	154x460x249	73x196x223	73x202x288
3	A	154x460x249	154x460x249	73x196x223	73x202x288
4	B	180x540x249	180x540x249	100x292x223	100x297x308
5.5	B	180x540x249	180x540x249	100x292x223	100x297x308
7.5	B	180x540x249	180x540x249	100x292x223	100x297x308
11	C	230x620x249	230x620x249	140x355x223	140x359x318
15	C	230x620x249	230x620x249	140x355x223	140x359x318
18.5	C/D	230x620x249	320x640x329	140x355x223	140x359x318
22	D	320x640x329	320x640x329	275x512x253	375x419x253
30	D	320x640x329	320x640x329	275x512x253	375x419x253
37	E	320x751x329	320x751x329	275x635x253	385x499x253
45	E	320x751x329	320x751x329	275x635x253	385x499x253
55	F	410x915x416	410x915x416	350x934x365	500x634x365
75	F	410x915x416	410x915x416	350x934x365	500x634x365
90	F	410x915x416	410x915x416	not available	not available

IP20: The depth increases by 12 mm if BOP-2, IOP-2-BT or blanking cover is used.
IP55: The depth increases by 7 mm if BOP-2, IOP-2-BT or blanking cover is used.
IP20: The height increases if screen plate is used:
FSA: + 80 mm; FSB: + 78 mm; FSC: + 77 mm; FSD, FSE, FSF: + 123 mm.

Filter

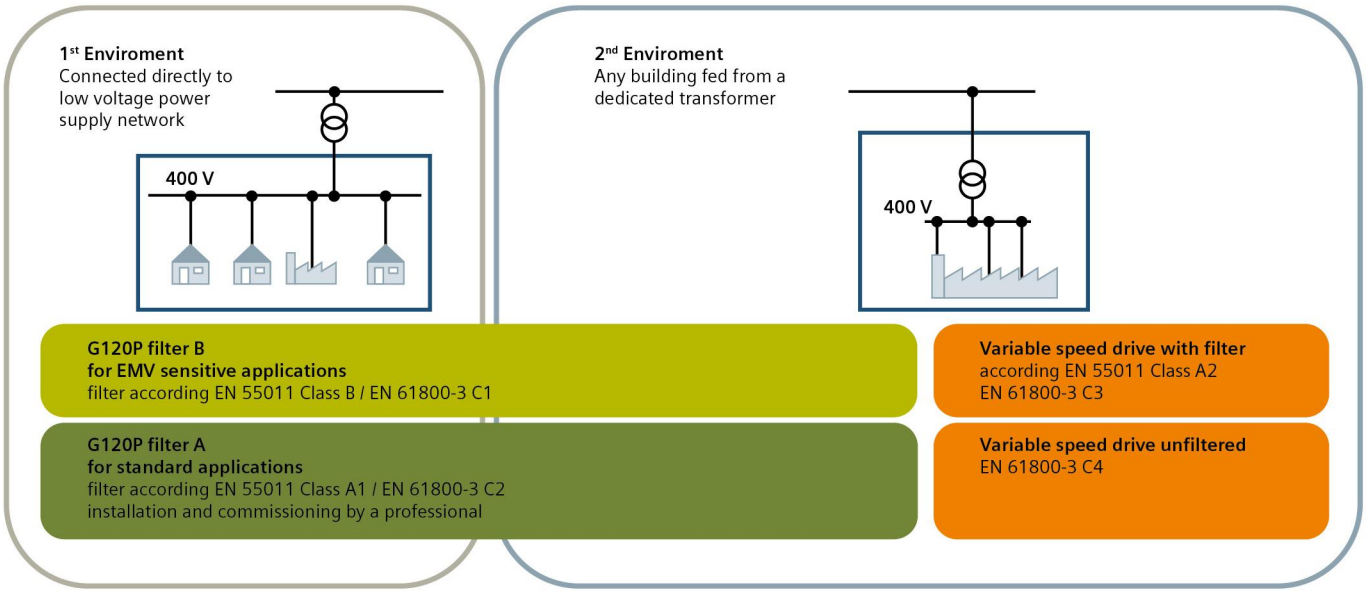
1st Enviroment
Connected directly to low voltage power supply network
400 V
2nd Enviroment
Any building fed from a dedicated transformer
400 V
G120P filter B
for EMV sensitive applications
filter according EN 55011 Class B / EN 61800-3 C1
G120P filter A
for standard applications
filter according EN 55011 Class A1 / EN 61800-3 C2
installation and commissioning by a professional
Variable speed drive with filter
according EN 55011 Class A2
EN 61800-3 C3
Variable speed drive unfiltered
EN 61800-3 C4

Variable Speed Drive for pumps and fans, IP55, Filter B (C1)

G120P..5B

Variable speed drive for energy-optimized speed control of pump, compressor and fan motors in building control applications, including: Power Module PM230, Control Unit CU230P-2-BT with screening plate without panel.

The G120P Bundle does not contain an operator panel or blanking cover. To achieve the IP55 or IP54 protection rating with the IP55 devices, please order an operator panel or blanking cover separately.

Data sheet	N5111
Operating voltage	400 V
Frequency	50/60 Hz
Communication	Modbus/RTU RS485/USS BACnet MS/TP PROFIBUS (optional) PROFINET (optional) CANopen (optional)
Product conformity	CE EAC RCM
Standard	EN 61800-3

Range overview G120P..5B

Power output [kW]	Output current [A]	Filter type	Dimensions (WxHxD) [mm]	Weight (net) [kg]	Stock no.	Product no.
0.75	2.2	B	154 x 460 x 249	5.01	6SL3200-6AM12-2BH0	**G120P-0.75/35B**
1.1	3.1	B	154 x 460 x 249	5.01	6SL3200-6AM13-1BH0	**G120P-1.1/35B**
1.5	4.1	B	154 x 460 x 249	5.01	6SL3200-6AM14-1BH0	**G120P-1.5/35B**
2.2	5.9	B	154 x 460 x 249	5.01	6SL3200-6AM15-8BH0	**G120P-2.2/35B**
3	7.7	B	154 x 460 x 249	5.01	6SL3200-6AM17-7BH0	**G120P-3/35B**
4	10.2	B	180 x 540 x 249	7.01	6SL3200-6AM21-0BH0	**G120P-4/35B**
5.5	13.2	B	180 x 540 x 249	7.01	6SL3200-6AM21-3BH0	**G120P-5.5/35B**
7.5	18	B	180 x 540 x 249	7.01	6SL3200-6AM21-8BH0	**G120P-7.5/35B**
11	26	B	230 x 620 x 249	10.21	6SL3200-6AM22-6BH0	**G120P-11/35B**
15	32	B	230 x 620 x 249	10.21	6SL3200-6AM23-2BH0	**G120P-15/35B**
18.5	38	B	320 x 640 x 329	31.71	6SL3200-6AM23-8BH0	**G120P-18.5/35B**
22	45	B	320 x 640 x 329	31.71	6SL3200-6AM24-5BH0	**G120P-22/35B**
30	60	B	320 x 640 x 329	31.71	6SL3200-6AM26-0BH0	**G120P-30/35B**
37	75	B	320 x 751 x 329	37.71	6SL3200-6AM27-5BH0	**G120P-37/35B**
45	90	B	320 x 751 x 329	37.71	6SL3200-6AM28-8BH0	**G120P-45/35B**
55	110	B	410 x 915 x 416	70.71	6SL3200-6AM31-1BH0	**G120P-55/35B**
75	145	B	410 x 915 x 416	70.71	6SL3200-6AM31-4BH0	**G120P-75/35B**
90	178	B	410 x 915 x 416	70.71	6SL3200-6AM31-7BH0	**G120P-90/35B**

IP55: The depth increases by 7mm if BOP-2, IOP-2-BT or blind cover is used.

G120P..5A

Variable Speed Drive for pumps and fans, IP55, Filter A (C2)

Variable speed drive for energy-optimized speed control of pump, compressor and fan motors in building control applications, including: Power Module PM230, Control Unit CU230P-2-BT with screening plate without panel.

The G120P Bundle does not contain an operator panel or blanking cover. To achieve the IP55 or IP54 protection rating with the IP55 devices, please order an operator panel or blanking cover separately.

Data sheet	N5111
Operating voltage	400 V
Frequency	50/60 Hz
Communication	Modbus/RTU RS485/USS BACnet MS/TP PROFIBUS (optional) PROFINET (optional) CANopen (optional)
Product conformity	CE RCM EAC
Standard	EN 61800-3

Range overview G120P..5A

Power output [kW]	Output current [A]	Filter type	Dimensions (WxHxD) [mm]	Weight (net) [kg]	Stock no.	Product no.
0.75	2.2	A	154 x 460 x 249	5.01	6SL3200-6AM12-2AH0	**G120P-0.75/35A**
1.1	3.1	A	154 x 460 x 249	5.01	6SL3200-6AM13-1AH0	**G120P-1.1/35A**
1.5	4.1	A	154 x 460 x 249	5.01	6SL3200-6AM14-1AH0	**G120P-1.5/35A**
2.2	5.9	A	154 x 460 x 249	5.01	6SL3200-6AM15-8AH0	**G120P-2.2/35A**
3	7.7	A	154 x 460 x 249	5.01	6SL3200-6AM17-7AH0	**G120P-3/35A**
4	10.2	A	180 x 540 x 249	7.01	6SL3200-6AM21-0AH0	**G120P-4/35A**
5.5	13.2	A	180 x 540 x 249	7.01	6SL3200-6AM21-3AH0	**G120P-5.5/35A**
7.5	18	A	180 x 540 x 249	7.01	6SL3200-6AM21-8AH0	**G120P-7.5/35A**
11	26	A	230 x 620 x 249	10.21	6SL3200-6AM22-6AH0	**G120P-11/35A**
15	32	A	230 x 620 x 249	10.21	6SL3200-6AM23-2AH0	**G120P-15/35A**
18.5	38	A	230 x 620 x 249	10.21	6SL3200-6AM23-8AH0	**G120P-18.5/35A**
22	45	A	320 x 640 x 329	31.71	6SL3200-6AM24-5AH0	**G120P-22/35A**
30	60	A	320 x 640 x 329	31.71	6SL3200-6AM26-0AH0	**G120P-30/35A**
37	75	A	320 x 751 x 329	37.71	6SL3200-6AM27-5AH0	**G120P-37/35A**
45	90	A	320 x 751 x 329	37.71	6SL3200-6AM28-8AH0	**G120P-45/35A**
55	110	A	410 x 915 x 416	70.71	6SL3200-6AM31-1AH0	**G120P-55/35A**
75	145	A	410 x 915 x 416	70.71	6SL3200-6AM31-4AH0	**G120P-75/35A**
90	178	A	410 x 915 x 416	70.71	6SL3200-6AM31-7AH0	**G120P-90/35A**

IP55: The depth increases by 7mm if BOP-2, IOP-2-BT or blind cover is used.

Variable Speed Drive for pumps and fans, IP20, Filter B (C1)

G120P..2B

Variable speed drive for energy-optimized speed control of pump, compressor and fan motors in building control applications, including: Power Module PM230, Control Unit CU230P-2-BT with screening plate without panel.

Data sheet	N5111
Operating voltage	400 V
Frequency	50/60 Hz
Communication	Modbus/RTU RS485/USS BACnet MS/TP PROFIBUS (optional) PROFINET (optional) CANopen (optional)
Product conformity	CE UL RCM EAC
Standard	EN 61800-3

Range overview G120P..2B

Power output [kW]	Output current [A]	Filter type	Dimensions (WxHxD) [mm]	Weight (net) [kg]	Stock no.	Product no.
0.75	2.2	B	73 x 202 x 288	4.06	6SL3200-6AE12-2BH0	**G120P-0.75/32B**
1.1	3.1	B	73 x 202 x 288	4.06	6SL3200-6AE13-1BH0	**G120P-1.1/32B**
1.5	4.1	B	73 x 202 x 288	4.06	6SL3200-6AE14-1BH0	**G120P-1.5/32B**
2.2	5.9	B	73 x 202 x 288	4.06	6SL3200-6AE15-8BH0	**G120P-2.2/32B**
3	7.7	B	73 x 202 x 288	4.06	6SL3200-6AE17-7BH0	**G120P-3/32B**
4	10.2	B	100 x 297 x 308	7.71	6SL3200-6AE21-0BH0	**G120P-4/32B**
5.5	13.2	B	100 x 297 x 308	7.71	6SL3200-6AE21-3BH0	**G120P-5.5/32B**
7.5	18	B	100 x 297 x 308	7.71	6SL3200-6AE21-8BH0	**G120P-7.5/32B**
11	26	B	140 x 359 x 318	13.11	6SL3200-6AE22-6BH0	**G120P-11/32B**
15	32	B	140 x 359 x 318	13.11	6SL3200-6AE23-2BH0	**G120P-15/32B**
18.5	38	B	140 x 359 x 318	13.11	6SL3200-6AE23-8BH0	**G120P-18.5/32B**
22	45	B	375 x 419 x 253	21.5	6SL3200-6AE24-5BH0	**G120P-22/32B**
30	60	B	375 x 419 x 253	21.5	6SL3200-6AE26-0BH0	**G120P-30/32B**
37	75	B	385 x 499 x 253	34.3	6SL3200-6AE27-5BH0	**G120P-37/32B**
45	90	B	385 x 499 x 253	34.3	6SL3200-6AE28-8BH0	**G120P-45/32B**
55	110	B	500 x 634 x 365	70.6	6SL3200-6AE31-1BH0	**G120P-55/32B**
75	145	B	500 x 634 x 365	70.6	6SL3200-6AE31-4BH0	**G120P-75/32B**

IP20: The depth increases by 12mm if BOP-2, IOP-2-BT or blind cover is used.

Variable Speed Drives for HVAC Applications G120P..

G120P..2A

Variable Speed Drive for pumps and fans, IP20, Filter A (C2)

Variable speed drive for energy-optimized speed control of pump, compressor and fan motors in building control applications, including: Power Module PM230, Control Unit CU230P-2-BT with screening plate without panel.

Data sheet	N5111
Operating voltage	400 V
Frequency	50/60 Hz
Communication	Modbus/RTU RS485/USS BACnet MS/TP PROFIBUS (optional) PROFINET (optional) CANopen (optional)
Product conformity	CE UL EAC RCM
Standard	EN 61800-3

Range overview G120P..2A

Power output [kW]	Output current [A]	Filter type	Dimensions (WxHxD) [mm]	Weight (net) [kg]	Stock no.	Product no.
0.75	2.2	A	73 x 196 x 223	2.31	6SL3200-6AE12-2AH0	**G120P-0.75/32A**
1.1	3.1	A	73 x 196 x 223	2.31	6SL3200-6AE13-1AH0	**G120P-1.1/32A**
1.5	4.1	A	73 x 196 x 223	2.31	6SL3200-6AE14-1AH0	**G120P-1.5/32A**
2.2	5.9	A	73 x 196 x 223	2.31	6SL3200-6AE15-8AH0	**G120P-2.2/32A**
3	7.7	A	73 x 196 x 223	2.31	6SL3200-6AE17-7AH0	**G120P-3/32A**
4	10.2	A	100 x 292 x 223	3.71	6SL3200-6AE21-0AH0	**G120P-4/32A**
5.5	13.2	A	100 x 292 x 223	3.71	6SL3200-6AE21-3AH0	**G120P-5.5/32A**
7.5	18	A	100 x 292 x 223	3.71	6SL3200-6AE21-8AH0	**G120P-7.5/32A**
11	26	A	140 x 355 x 223	5.81	6SL3200-6AE22-6AH0	**G120P-11/32A**
15	32	A	140 x 355 x 223	5.81	6SL3200-6AE23-2AH0	**G120P-15/32A**
18.5	38	A	140 x 355 x 223	5.81	6SL3200-6AE23-8AH0	**G120P-18.5/32A**
22	45	A	275 x 512 x 253	14	6SL3200-6AE24-5AH0	**G120P-22/32A**
30	60	A	275 x 512 x 253	14	6SL3200-6AE26-0AH0	**G120P-30/32A**
37	75	A	275 x 635 x 245	22	6SL3200-6AE27-5AH0	**G120P-37/32A**
45	90	A	275 x 635 x 253	22	6SL3200-6AE28-8AH0	**G120P-45/32A**
55	110	A	350 x 934 x 365	48	6SL3200-6AE31-1AH0	**G120P-55/32A**
75	145	A	350 x 934 x 365	48	6SL3200-6AE31-4AH0	**G120P-75/32A**

IP20: The depth increases by 12mm if BOP-2, IOP-2-BT or blind cover is used.

Available operator panels for G120P..

Product Title	Data sheet	Stock no.	Product no.
G120P blanking cover, IP55		6SL3256-6BA00-0AA0	**G120P-BCOVER**
G120P basic operator panel BOP-2, IP55	N5116	6SL3255-6AA00-4CA0	**G120P-BOP-2**
G120P intelligent operator panel IOP-2-BT	N5116	6SL3255-6AA00-4JA2	**G120P-IOP-2-BT**
G120P-SAM Smart Access Module	N5116	6SL3255-6AA00-5AA0	**G120P-SAM**

Accessories and spare parts for IP55

Product Title	Data sheet	Stock no.	Product no.
G120P PM Fan IP55, external, FSA		6SL3200-0SF21-0AA1	**G120P-FExtFSA-IP55**
G120P PM Fan IP55, external, FSB		6SL3200-0SF22-0AA1	**G120P-FExtFSB-IP55**
G120P PM Fan IP55, external, FSC		6SL3200-0SF23-0AA1	**G120P-FExtFSC-IP55**
G120P-SAM Smart Access Module	N5116	6SL3255-6AA00-5AA0	**G120P-SAM**
G120P air guide sheet PM230, IP55, FSA	N5111	6SL3266-7SA00-0MA0	**G120P-AIRSHEET-FSA**
G120P air guide sheet PM230, IP55, FSB	N5111	6SL3266-7SB00-0MA0	**G120P-AIRSHEET-FSB**
G120P air guide sheet PM230, IP55, FSC	N5111	6SL3266-7SC00-0MA0	**G120P-AIRSHEET-FSC**
G120P PM Fan IP55, external, FSD-FSE		6SL3200-0SF24-0AA0	**G120P-FExtFSDE-IP55**
G120P PM Fan IP55, external, FSF		6SL3200-0SF26-0AA0	**G120P-FExtFSF-IP55**
G120P PM Fan IP55, internal, FSA-FSC		6SL3200-0SF31-0AA0	**G120P-FIntFSAC-IP55**
G120P PM Fan IP55, internal, FSD-FSF		6SL3200-0SF32-0AA0	**G120P-FIntFSDF-IP55**
Operator Panel Extension cable for G120P IP55		6SL3256-1BA00-4HB0	**G120P-IP55-PAN-EXT**
G120P mounting parts set, PM230, IP55, FSA		6SL3200-0SK02-0AA0	**G120P-MSetFSA-IP55**
G120P mounting parts set, PM230, IP55, FSB		6SL3200-0SK03-0AA0	**G120P-MSetFSB-IP55**
G120P mounting parts set, PM230, IP55, FSC		6SL3200-0SK04-0AA0	**G120P-MSetFSC-IP55**
G120P mounting parts set, PM230, IP55, FSD		6SL3200-0SK05-0AA0	**G120P-MSetFSD-IP55**
G120P mounting parts set, PM230, IP55, FSE		6SL3200-0SK06-0AA0	**G120P-MSetFSE-IP55**
G120P mounting parts set, PM230, IP55, FSF		6SL3200-0SK07-0AA0	**G120P-MSetFSF-IP55**

Accessories and spare parts for IP20

Product Title	Data sheet	Stock no.	Product no.
G120P Door mounting kit for IOP or BOP-2		6SL3256-6AP00-0JA0	**G120P-DOOR-KIT**
G120P Screening-Kit, PM230 IP20 FSA		6SL3266-1EA00-0KA0	**G120P-Screen-FSA**
G120P Screening-Kit, PM230 IP20 FSB		6SL3266-1EB00-0KA0	**G120P-Screen-FSB**
G120P Screening-Kit, PM230 IP20 FSC		6SL3266-1EC00-0KA0	**G120P-Screen-FSC**
G120P Screening-Kit, PM230 IP20 FSD-FSE		6SL3262-1AD00-0DA0	**G120P-Screen-FSDE**
G120P Screening-Kit, PM230 IP20 FSF		6SL3262-1AF00-0DA0	**G120P-Screen-FSF**
G120P PM Fan IP20, external, FSD-FSE		6SL3200-0SF05-0AA0	**G120P-FExtFSDE-IP20**
G120P PM Fan IP20, external, FSF		6SL3200-0SF08-0AA0	**G120P-FExtFSF-IP20**
G120P PM Fan IP20, external, FSA		6SL3200-0SF21-0AA0	**G120P-FExtFSA-IP20**
G120P PM Fan IP20, external, FSB		6SL3200-0SF22-0AA0	**G120P-FExtFSB-IP20**
G120P PM Fan IP20, external, FSC		6SL3200-0SF23-0AA0	**G120P-FExtFSC-IP20**

Accessories and spare parts for IP55 and IP20

Product Title	Data sheet	Stock no.	Product no.
G120P Control Unit, CANopen		6SL3243-0BB30-1CA3	**CU230P-2 CAN**
G120P Control Unit, PROFIBUS DP		6SL3243-0BB30-1PA3	**CU230P-2 DP**
G120P Control Unit, USS, Modbus, BACnet		S55529-E100	**CU230P-2-BT**
G120P PC-Inverter Connection Kit-2		6SL3255-0AA00-2CA0	**G120P-PC-Kit**
STARTER Commissioning Tool for Sinamics and Micromaster Drives		6SL3072-0AA00-0AG0	**G120P-Starter**
G120P Control Unit, PROFINET IO		6SL3243-0BB30-1FA0	**CU230P-2 PN**
G120P CU230P-2 Screening Kit		6SL3264-1EA00-0FA0	**G120P-CUScreen**

Meters

Overview and selection tools		702
Electronic heat cost allocators	Electronic heat cost allocators WHE54..	706
	Accessories and mounting material for WHE5..	707
Mechanical water meters	Mechanical single-jet water meters	709
	Mechanical capsule water meters	711
	Accessories for mechanical water meters	712
Electronic water meters	Electronic screw-type water meters	714
	Electronic measuring capsule water meters	716
Impeller type heat/cooling energy meters	Impeller type heat/cooling energy meters WFM5.. / WFN5..	718
	Impeller type heat/cooling energy meters WFM6.. / WFN6..	719
	Accessories for impeller type heat meters	720
Ultrasonic heat/cooling energy meters	Ultrasonic heat/cooling energy meters WS.5..	722
	Ultrasonic heat/cooling energy meters WS.6..	724
	Ultrasonic heat/cooling energy meters WS.8..	726
	Ultrasonic heat/cooling energy meters UH50..	728
Systems for remote readout	Automatic Meter Reading System	737
	Walk-by radio system	739
	M-bus system	741
Synergyr control and metering system	Mounting kit for WRV81/84 replacement	744
	Mounting kit for WRV83 replacement	745

Heat cost allocators WHE5..

	2 sensors	Communication	Summer switch off	Due date
WHE542-D100S	■	AMR & walk-by	■ [1]	31.12
WHE542-D291S	■	AMR & walk-by	■ [2]	30.09
WHE632-D292C	■	AMR & walk-by	■ [2]	30.09

[1] Beginning of summer: 01.06 – End of summer: 31.08
[2] Beginning of summer: 01.06 – End of summer: 30.09

Mechanical impeller type hot and cold water meters

	Type of meter	Q3	Mounting length	Communication	Connection
WFK30.D080	Cold water up to 30° C	2.5 m³/h	80 mm	walk-by or AMR or M-Bus [1]	G 3/4"
WFK30.D110	Cold water up to 30° C	2.5 m³/h	110 mm	walk-by or AMR or M-Bus [1]	G 3/4"
WFK30.E130	Cold water up to 30 °C	4 m³/h	130 mm	walk-by or AMR or M-Bus [1]	G 1"
WFW30.D080	Hot water up to 90° C	2.5 m³/h	80 mm	walk-by or AMR or M-Bus [1]	G 3/4"
WFW30.D110	Hot water up to 90° C	2.5 m³/h	110 mm	walk-by or AMR or M-Bus [1]	G 3/4"
WFW30.E130	Hot water up to 90 °C	4 m³/h	130 mm	walk-by or AMR or M-Bus [1]	G 1"

[1] With add-on module: AMR + walk-by (WFZ661), M-Bus (WFZ311)

Mechanical impeller type hot and cold water meters

	Type of meter	Q3	Mounting length	Communication	Connection
WFK240.D080	Cold water up to 50° C	2.5 m³/h	80 mm	Reed contact or Namur [2]	G 3/4"
WFK240.D110	Cold water up to 50° C	2.5 m³/h	110 mm	Reed contact or Namur [2]	G 3/4"
WFK240.E130	Cold water up to 50° C	4.0 m³/h	130 mm	Reed contact or Namur [2]	G 1"
WFW240.D080	Hot water from 30 to 90° C	2.5 m³/h	80 mm	Reed contact or Namur [2]	G 3/4"
WFW240.D110	Hot water from 30 to 90° C	2.5 m³/h	110 mm	Reed contact or Namur [2]	G 3/4"
WFW240.E130	Hot water from 30 to 90° C	4.0 m³/h	130 mm	Reed contact or Namur [2]	G 1"

[2] With impulse module: Reed contact (WFZ44), reed contact with Namur (WFZ43)

Electronic impeller type hot and cold water meters

	Type of meter	Q3	Mounting length	Communication	Connection
WFK636.D080	Cold water meter up to 30° C	2.5 m³/h	80 mm	AMR + walk-by, S-mode	G 3/4"
WFK636.D110	Cold water meter up to 30° C	2.5 m³/h	110 mm	AMR + walk-by, S-mode	G 3/4"
WFK636.E130	Cold water meter up to 30° C	4.0 m³/h	130 mm	AMR + walk-by, S-mode	G 1"
WFW636.D080	Hot water meter up to 90° C	2.5 m³/h	80 mm	AMR + walk-by, S-mode	G 3/4"
WFW636.D110	Hot water meter up to 90° C	2.5 m³/h	110 mm	AMR + walk-by, S-mode	G 3/4"
WFW636.E130	Hot water meter up to 90° C	4.0 m³/h	130 mm	AMR + walk-by, S-mode	G 1"
WFK636.D08C	Cold water meter up to 30° C	2.5 m³/h	80 mm	AMR + walk-by, C-mode	G 3/4"
WFK636.D11C	Cold water meter up to 30° C	2.5 m³/h	110 mm	AMR + walk-by, C-mode	G 3/4"
WFK636.E13C	Cold water meter up to 30° C	4.0 m³/h	130 mm	AMR + walk-by, C-mode	G 1"
WFW636.D08C	Hot water meter up to 90° C	2.5 m³/h	80 mm	AMR + walk-by, C-mode	G 3/4"
WFW636.D11C	Hot water meter up to 90° C	2.5 m³/h	110 mm	AMR + walk-by, C-mode	G 3/4"
WFW636.E13C	Hot water meter up to 90° C	4.0 m³/h	130 mm	AMR + walk-by, C-mode	G 1"

Impeller type meters

	Type of meter	Nominal flow rate	Communica-tion	Power supply	Type	Connec-tion	Mounting length
WFM501-E000H0	Heat	0.6 m³/h	walk-by or AMR or M-Bus [3])	Battery	Impeller meter	G 3/4"	110 mm
WFM541-G000H0	Heat	0.6 m³/h	M-Bus	Battery	Impeller meter	G 3/4"	110 mm
WFM681-G000H0	Heat	0.6 m³/h	AMR + walk-by	Battery	Impeller meter	G 3/4"	110 mm
WFN541-G000H0	Combi	0.6 m³/h	M-Bus	Battery	Impeller meter	G 3/4″	110 mm
WFN681-G000H0	Combi	0.6 m³/h	AMR + walk-by	Battery	Impeller meter	G 3/4″	110 mm
WFM502-E000H0	Heat	1.5 m³/h	walk-by or AMR or M-Bus [3])	Battery	Impeller meter	G 3/4"	110 mm
WFM542-C000H0	Heat	1.5 m³/h	M-Bus	Battery	Impeller meter	G 3/4"	80 mm
WFM542-G000H0	Heat	1.5 m³/h	M-Bus	Battery	Impeller meter	G 3/4"	110 mm
WFM682-G000H0	Heat	1.5 m³/h	AMR + walk-by	Battery	Impeller meter	G 3/4"	110 mm
WFN542-G000H0	Combi	1.5 m³/h	M-Bus	Battery	Impeller meter	G 3/4″	110 mm
WFN682-G000H0	Combi	1.5 m³/h	AMR + walk-by	Battery	Impeller meter	G 3/4″	110 mm
WFM503-J000H0	Heat	2.5 m³/h	walk-by or AMR or M-Bus [3])	Battery	Impeller meter	G 1"	130 mm
WFM543-L000H0	Heat	2.5 m³/h	M-Bus	Battery	Impeller meter	G 1"	130 mm
WFM683-L000H0	Heat	2.5 m³/h	AMR + walk-by	Battery	Impeller meter	G 1"	130 mm
WFN543-L000H0	Combi	2.5 m³/h	M-Bus	Battery	Impeller meter	G 1″	130 mm
WFN683-L000H0	Combi	2.5 m³/h	AMR + walk-by	Battery	Impeller meter	G 1″	130 mm

[3]) With add-on module: AMR & walk-by (WFZ662, WFZ662C), M-Bus (WFZ51)

Ultrasonic meters

	Type of meter	Nominal flow rate	Communi-cation	Power supply	Type	Connec-tion	Mounting length
WSM506-0E	Heat	0.6 m³/h	none	Battery [1]	Ultrasonic meter	G 3/4"	110 mm
WSM506-BE	Heat	0.6 m³/h	M-Bus	Battery [1]	Ultrasonic meter	G 3/4"	110 mm
WSM506-FE	Heat	0.6 m³/h	M-Bus Funk	Battery [1]	Ultrasonic meter	G 3/4"	110 mm
WSM606-BE	Heat	0.6 m³/h	M-Bus	Battery [1]	Ultrasonic meter	G 3/4"	110 mm
WSN506-BE	Combi	0.6 m³/h	M-Bus	Battery [1]	Ultrasonic meter	G 3/4"	110 mm
WSN506-FE	Combi	0.6 m³/h	M-Bus Funk	Battery [1]	Ultrasonic meter	G 3/4"	110 mm
WSN606-BE	Combi	0.6 m³/h	M-Bus	Battery [1]	Ultrasonic meter	G 3/4"	110 mm
WSM515-0E	Heat	1.5 m³/h	none	Battery [1]	Ultrasonic meter	G 3/4"	110 mm
WSM515-BE	Heat	1.5 m³/h	M-Bus	Battery [1]	Ultrasonic meter	G 3/4"	110 mm
WSM515-FE	Heat	1.5 m³/h	M-Bus Funk	Battery [1]	Ultrasonic meter	G 3/4"	110 mm
WSM615-BE	Heat	1.5 m³/h	M-Bus	Battery [1]	Ultrasonic meter	G 3/4"	110 mm
WSN515-BE	Combi	1.5 m³/h	M-Bus	Battery [1]	Ultrasonic meter	G 3/4"	110 mm
WSN515-FE	Combi	1.5 m³/h	M-Bus Funk	Battery [1]	Ultrasonic meter	G 3/4"	110 mm
WSN615-BE	Combi	1.5 m³/h	M-Bus	Battery [1]	Ultrasonic meter	G 3/4"	110 mm
WSM525-0E	Heat	2.5 m³/h	none	Battery [1]	Ultrasonic meter	G 1"	130 mm
WSM525-BE	Heat	2.5 m³/h	M-Bus	Battery [1]	Ultrasonic meter	G 1"	130 mm
WSM525-FE	Heat	2.5 m³/h	M-Bus Funk	Battery [1]	Ultrasonic meter	G 1"	130 mm
WSM625-BE	Heat	2.5 m³/h	M-Bus	Battery [1]	Ultrasonic meter	G 1"	130 mm
WSN525-BE	Combi	2.5 m³/h	M-Bus	Battery [1]	Ultrasonic meter	G 1"	130 mm
WSN525-FE	Combi	2.5 m³/h	M-Bus Funk	Battery [1]	Ultrasonic meter	G 1"	130 mm
WSN625-BE	Combi	2.5 m³/h	M-Bus	Battery [1]	Ultrasonic meter	G 1"	130 mm

	Type of meter	Nominal flow rate	Communi-cation	Power supply	Type	Connec-tion	Mounting length
WSM805-FBBAE3A	Heat	0.6 m³/h	M-Bus	M-Bus plus 1 back-up battery [2]	Ultrasonic meter	G 3/4"	110 mm
WSM805-FHBAE3A	Heat	0.6 m³/h	M-Bus	M-Bus plus 1 back-up battery [2]	Ultrasonic meter	G 3/4"	110 mm
WSN805-FBBBF3A	Combi	0.6 m³/h	M-Bus	M-Bus plus 2 back-up batteries [1]	Ultrasonic meter	G 3/4"	110 mm
WSM821-FBBAE3A	Heat	1.5 m³/h	M-Bus	M-Bus plus 1 back-up battery [2]	Ultrasonic meter	G 3/4"	110 mm
WSM821-FHBAE3A	Heat	1.5 m³/h	M-Bus	M-Bus plus 1 back-up battery [2]	Ultrasonic meter	G 3/4"	110 mm
WSN821-FBBBF3A	Combi	1.5 m³/h	M-Bus	M-Bus plus 2 back-up batteries [1]	Ultrasonic meter	G 3/4"	110 mm
WSM836-FBBAE3A	Heat	2.5 m³/h	M-Bus	M-Bus plus 1 back-up battery [2]	Ultrasonic meter	G 1"	130 mm
WSM836-FHBAE3A	Heat	2.5 m³/h	M-Bus	M-Bus plus 1 back-up battery [2]	Ultrasonic meter	G 1"	130 mm
WSN836-FBBBF3A	Combi	2.5 m³/h	M-Bus	M-Bus plus 2 back-up batteries [1]	Ultrasonic meter	G 1"	130 mm
WSM843-FDBAE3A	Heat	3.5 m³/h	M-Bus	M-Bus plus 1 back-up battery [2]	Ultrasonic meter	G 1 1/4"	260 mm
WSN843-FDBBF3A	Combi	3.5 m³/h	M-Bus	M-Bus plus 2 back-up batteries [1]	Ultrasonic meter	G 1 1/4"	260 mm
WSM853-FDBAE3A	Heat	6 m³/h	M-Bus	M-Bus plus 1 back-up battery [2]	Ultrasonic meter	G 1 1/4"	260 mm
WSN853-FDBBF3A	Combi	6 m³/h	M-Bus	M-Bus plus 2 back-up batteries [1]	Ultrasonic meter	G 1 1/4"	260 mm

[1] Battery life: 11 years
[2] Battery life: 6 years

Ultrasonic meters

	Type of meter	Nominal flow rate	Communication	Power supply	Type	Connec-tion	Mounting length
UH50-A05-00	Heat	0.6 m³/h	none [3]	none [3]	Ultrasonic meter	G 3/4"	110 mm
UH50-C05-00	Heat	0.6 m³/h	none [3]	none [3]	Ultrasonic meter	G 3/4"	110 mm
UH50-C06-00	Combi	0.6 m³/h	none [3]	none [3]	Ultrasonic meter	G 3/4“	110 mm
UH50-A21-00	Heat	1.5 m³/h	none [3]	none [3]	Ultrasonic meter	G 3/4"	110 mm
UH50-C21-00	Heat	1.5 m³/h	none [3]	none [3]	Ultrasonic meter	G 3/4"	110 mm
UH50-C22-00	Combi	1.5 m³/h	none [3]	none [3]	Ultrasonic meter	G 3/4“	110 mm
UH50-C25-00	Combi	1.5 m³/h	none [3]	none [3]	Ultrasonic meter	G 1”	190 mm
UH50-A36-00	Heat	2.5 m³/h	none [3]	none [3]	Ultrasonic meter	G 1"	130 mm
UH50-C36-00	Heat	2.5 m³/h	none [3]	none [3]	Ultrasonic meter	G 1"	130 mm
UH50-C37-00	Combi	2.5 m³/h	none [3]	none [3]	Ultrasonic meter	G 1”	130 mm
UH50-C40-00	Combi	2.5 m³/h	none [3]	none [3]	Ultrasonic meter	G 1”	190 mm
UH50-A45-00	Heat	3.5 m³/h	none [3]	none [3]	Ultrasonic meter	G 1 1/4"	260 mm
UH50-C45-00	Combi	3.5 m³/h	none [3]	none [3]	Ultrasonic meter	G 1 1/4"	260 mm
UH50-C47-00	Combi	3.5 m³/h	none [3]	none [3]	Ultrasonic meter	G 1 1/4“	260 mm
UH50-A50-00	Heat	6.0 m³/h	none [3]	none [3]	Ultrasonic meter	G 1 1/4"	260 mm
UH50-C50-00	Combi	6.0 m³/h	none [3]	none [3]	Ultrasonic meter	G 1 1/4"	260 mm
UH50-C52-00	Combi	6.0 m³/h	none [3]	none [3]	Ultrasonic meter	DN 25	260 mm
UH50-C60-00	Combi	10 m³/h	none [3]	none [3]	Ultrasonic meter	G 2”	300 mm
UH50-A61-00	Heat	10 m³/h	none [3]	none [3]	Ultrasonic meter	DN 40	300 mm
UH50-C61-00	Combi	10 m³/h	none [3]	none [3]	Ultrasonic meter	DN 40	300 mm
UH50-A65-00	Heat	15 m³/h	none [3]	none [3]	Ultrasonic meter	DN 50	270 mm
UH50-C65-00	Combi	15 m³/h	none [3]	none [3]	Ultrasonic meter	DN 50	270 mm
UH50-A70-00	Heat	25 m³/h	none [3]	none [3]	Ultrasonic meter	DN 65	300 mm
UH50-C70-00	Combi	25 m³/h	none [3]	none [3]	Ultrasonic meter	DN 65	300 mm
UH50-A74-00	Heat	40 m³/h	none [3]	none [3]	Ultrasonic meter	DN 80	300 mm
UH50-C74-00	Combi	40 m³/h	none [3]	none [3]	Ultrasonic meter	DN 80	300 mm
UH50-A83-00	Heat	60 m³/h	none [3]	none [3]	Ultrasonic meter	DN 100	360 mm
UH50-C83-00	Combi	60 m³/h	none [3]	none [3]	Ultrasonic meter	DN 100	360 mm

[3] Various communication and power supply modules available

Electronic heat cost allocators
Electronic heat cost allocators WHE54..

WHE54..

Electronic heat cost allocators (RF)

Device for heat cost allocation by acquiring the amount of heat emitted by radiators.
The heat cost allocators transmit simultaneously walk-by and AMR telegrams in S-mode (RF 868 MHz). Readout is performed via walk-by, the consumption data are collected on site using a mobile data collector. If the data shall be read out from a remote location (AMR), they are collected by a network node, stored and periodically sent to the customer via gateway.

- Programming is performed with the ACT50 software.
- Available as a two-sensor device or with remote sensor
- Communication in S-mode or C-mode

All heat cost allocators are supplied without mounting plate. The mounting plate must be ordered as a separate item.

Data sheet	A6V10786229
Voltage supply	Lithium battery
Battery life	>10 Years
Operating voltage	DC 3 V
Display	LCD
Dimensions (W x H x D)	40 x 102 x 31 mm

Range overview WHE54..

Product Title	Stock no.	Product no.
Electronic heat cost allocator with watchdog timer, Double sensor, Summer switch-off: 06/01 – 08/31, due date 12/31, meter reading by walk-by: Annually, S-mode	S55562-F127	**WHE542-D100S**
Electronic heat cost allocator with watchdog timer, Double sensor, Summer switch-off: 06/01 – 09/30, due date 09/30, meter reading by walk-by: Monthly, S-mode	S55562-F128	**WHE542-D291S**

WHE632-D292C

Electronic heat cost allocator with watchdog timer, Double sensor, Summer switch-off: 06/01 - 09/30, due date 09/30, C-mode

Device for heat cost allocation by acquiring the amount of heat emitted by radiators.
The heat cost allocators transmit simultaneously walk-by and AMR telegrams in C-mode (RF 868 MHz). Readout is performed via walk-by, the consumption data are collected on site using a mobile data collector. If the data shall be read out from a remote location (AMR), they are collected by a network node, stored and periodically sent to the customer via gateway.

- Programming is performed with the ACT50 software.
- Available as a two-sensor device or with remote sensor
- Communication in C-mode

All heat cost allocators are supplied without mounting plate. The mounting plate must be ordered as a separate item.

Data sheet	A6V10786229
Voltage supply	Lithium battery
Battery life	>10 Years
Operating voltage	DC 3 V
Due Date	09.30
Display	LCD
Dimensions (W x H x D)	40 x 102 x 31 mm
Warranty	24 Months

Stock no.	Product no.
S55562-F129	**WHE632-D292C**

Parts for fixing

Product Title	Packaging unit	Stock no.	Product no.
Threaded hoop (pipe 18...30 mm)	10 pieces	JXF:FKT0014	**FKT0014**
Threaded hoop (pipe up to 17 mm)	10 pieces	JXF:FKT0004	**FKT0004**
Shank nut M3 x 3 mm	100 pieces	JXF:FNM0002	**FNM0002**
Shank nut M3 x 6 mm	100 pieces	JXF:FNM0003	**FNM0003**
Shank nut M3 x 9.5 mm	100 pieces	JXF:FNM0001	**FNM0001**
Clamping sleeve special radiator	10 pieces	JXF:FKM0002	**FKM0002**
Clamping bracket (pipes TE 36 mm)	10 pieces	JXF:FKT0015	**FKT0015**
Clamping bracket (pipes TE 46 mm)	10 pieces	JXF:FKT0016	**FKT0016**
Clamping bracket shortened	10 pieces	JXF:FKT0009	**FKT0009**
Clamping bracket trapezoidal 35 mm	10 pieces	JXF:FKT0018	**FKT0018**
Clamping bracket trapezoidal 50 mm	10 pieces	JXF:FKT0019	**FKT0019**
Clamping bracket trapezoidal 65 mm	10 pieces	JXF:FKT0020	**FKT0020**
Expanding bracket of lamella-type radiator	10 pieces	JXF:FKA0004	**FKA0004**
Square bolt 4.5 mm with cross pin	10 pieces	JXF:BOZ4002	**BOZ4002**
Square bolt 6 mm with cross pin	10 pieces	JXF:BOZ4003	**BOZ4003**
Square bolt 12 mm with cross pin	10 pieces	JXF:BOZ4004	**BOZ4004**

Parts for mounting

Product Title	Packaging unit	Stock no.	Product no.
Mounting plate (P3)	50 pieces	S55563-F115	**FKA0017**
Mounting plate wide	25 pieces	JXF:FKA0022	**FKA0022**
Prism for installation plate	1 piece	JXF:FKA0001	**FKA0001**
Spacer sleeve	10 pieces	JXF:FKT0010	**FKT0010**
Spacer	10 pieces	JXF:FKA0013	**FKA0013**
Threaded bushing	10 pieces	JXF:FKA0012	**FKA0012**
Clamping piece (threaded hoop 17 mm)	10 pieces	JXF:FKA0003	**FKA0003**
Clamping piece (threaded hoop 18...30 mm)	10 pieces	JXF:FKA0008	**FKA0008**
Installation plate for remote sensor	10 pieces	JXF:FKA0009	**FKA0009**
Wall bracket (P3)	10 pieces	JXF:FKK0044	**FKK0044**
Contact screw	10 pieces	JXF:FKA0010	**FKA0010**
Contact screw long	10 pieces	JXF:FKA0011	**FKA0011**

Standard parts

Product Title	Packaging unit	Stock no.	Product no.
Self-tapping screw B 2.9 x 13 mm	500 pieces	JXF:FNR0008	**FNR0008**
Screw B 3.9 x 45 mm	500 pieces	JXF:FNR0007	**FNR0007**
Cross-slot screw M4 x 30 mm	500 pieces	JXF:FNR0003	**FNR0003**
Cross-slot screw M4 x 40 mm	500 pieces	JXF:FNR0004	**FNR0004**
Cross-slot screw M4 x 50 mm	500 pieces	JXF:FNR0005	**FNR0005**
Cross-slot screw M4 x 70 mm	500 pieces	JXF:FNR0006	**FNR0006**
Welding stud M3 x 8 mm	1000 pieces	JXF:FKT0013	**FKT0013**
Welding stud M3 x 12 mm	1000 pieces	JXF:FKT0011	**FKT0011**
Welding stud M3 x 15 mm	1000 pieces	JXF:FKT0012	**FKT0012**
Self-locking nut with serrated bearing M3	1000 pieces	JXF:FNM0005	**FNM0005**

Miscellaneous accessory

Product Title	Packaging unit	Stock no.	Product no.
Dowel 6 mm	100 pieces	JXF:FNU0001	**FNU0001**
Kit remote sensor 1.5 m	1 piece	JXF:HCAIK0100S1	**HCAIK0100S1**
Kit remote sensor 2.5 m	1 piece	JXF:HCAIK0100S2	**HCAIK0100S2**
Kit remote sensor 5 m	1 piece	JXF:HCAIK0100S5	**HCAIK0100S5**
Lead seal blue	100 pieces	JXF:FKK0041	**FKK0041**

Electronic heat cost allocators
Accessories and mounting material for WHE5..

Miscellaneous accessory

Product Title	Packaging unit	Stock no.	Product no.
Cable duct white	10 m	JXF:FOZ0001	**FOZ0001**
Snap-on panel	50 pieces	JXF:FKK0034	**FKK0034**
Installation template	1 piece	JXF:HCAIP001001	**HCAIP001001**
Installation aid (convector)	1 piece	JXF:FKT0017	**FKT0017**
ERGO universal instant glue 3g	1 piece	JXF:FSS0007	**FSS0007**

Programming tools and software

Product Title	Stock no.	Product no.
ACT50 – Readout and parameterization software	JXF:ACT50	**ACT50**
Infrared read head (with USB interface)	JXF:WFZ.IRDA-USB	**WFZ.IRDA-USB**
Programming adapter	JXF:HCAPH001001	**HCAPH001001**

Mechanical single-jet water meters (module compatible) WFK30.. / WFW30..

Mechanical single-jet impeller meter for measuring the consumption of cold (WFK30..) or hot water (WFW30..). Display of cumulated consumption. Versions without remote reading output. Body made of brass, dry-runner with magnetic transmission and pivotable totalizer. All water meters WFK30.. and WFW30.. can be retrofitted with electronic communication modules for radio (WFZ661) or M-Bus (WFZ311) readout. These meters are MID conform.

- Metrological class, horizontal mounting of body = R80 (class B).
- Metrological class, vertical mounting of body = R40 (class A).
- Flow rate Q3 according 2004/22/EC MID

Mechanical water meter to acquire the water consumption in domestic water systems in residential or non-residential buildings and in water supply systems.

The meters are supplied with Installation Instructions in the following languages: English, French, German, Italian, Russian and Spanish.

Data sheet	N5326
PN class	PN 16
Display	m3; 0...99999.999

Range overview WFK30.. / WFW30..

Flow rate Q3 [m³/h]	Mounting length [mm]	Con-nect. thread	Max. water temperature [°C]	Stock no.	Product no.
2.5	80	G ¾"	30	S55560-F100	**WFK30.D080**
2.5	110	G ¾"	30	S55560-F101	**WFK30.D110**
4	130	G 1"	30	JXF:WFK30.E130	**WFK30.E130**
2.5	80	G ¾"	90	S55560-F102	**WFW30.D080**
2.5	110	G ¾"	90	S55560-F103	**WFW30.D110**
4	130	G 1"	90	JXF:WFW30.E130	**WFW30.E130**

WF.240..

Mechanical single-jet water meter with module slot, cold or hot

The mechanical single-jet impeller type meters are of compact design and used for measuring the consumption of cold water (WFK240..) or hot water (WFW240..). They are available as wall-mounted dry runner versions in different sizes, with a flow measuring section body made of brass. The cumulated consumption value acquired by the water meter can be read out on site. All water meters WFK240.. and WFW240.. can be retrofitted with a pulse module equipped with Reed contact (WFZ44) or Reed contact with Namur circuit (WFZ43). They conform to MID.

The meters are supplied with Installation Instructions in the following languages: Bulgarian, Croatian, Czech, Dutch, English, Finnish, French, German, Greek, Hungarian, Italian, Lithuanian, Norwegian, Polish, Slovakian, Slovenian, Spanish, Turkish.

Mechanical single-jet water meter with module slot, cold or hot

Data sheet	A6V12048975
PN class	PN 16
Display	m3; 0...99999.999

Range overview WF.240..

Flow rate Q3 [m³/h]	Mounting length [mm]	Con-nect. thread	Max. water temperature [°C]	Stock no.	Product no.
2.5	80	G ¾"	50	S55560-F110	**WFK240.D080**
2.5	110	G ¾"	50	S55560-F111	**WFK240.D110**
4	130	G 1"	50	S55560-F112	**WFK240.E130**
2.5	80	G ¾"	90	S55560-F113	**WFW240.D080**
2.5	110	G ¾"	90	S55560-F114	**WFW240.D110**
4	130	G 1"	90	S55560-F115	**WFW240.E130**

Mechanical capsule water meter flush-mounted (module compatible)

WMK10../WMW10..

Mechanical capsule water meter for measuring the consumption of hot (WMW..) and cold (WMK..) water. Designed specifically for flush-mounting. The meter consists of an easy-to-replace measuring cell with a mechanical totalizer and a single-pipe connecting piece (EAT) which must be ordered separately and which is firmly connected to the water pipe. Suited for flush or wall mounting. Display of cumulated consumption. Dry-runner with magnetic transmission and pivotable totalizer. Body and single-pipe connecting piece are made of brass. Versions without remote reading output. The mechanical capsule water meters WMK10.D and WMW10.D can be retrofitted with electronic modules for M-Bus radio (WFZ661) or M-Bus (WFZ311) readout are MID approved. For the use with radio modules there are extra rosettes and bezels available.
Metrological class, horizontal mounting of body = class B
Metrological class, vertical mounting of body =class A

Mechanical water meter to acquire the water consumption in domestic water systems in residential or non-residential buildings and in water supply systems.

The meters are supplied with Installation Instructions in the following languages: English, French, German, Italian, Russian and Spanish.

Data sheet	N5327
PN class	PN 10

Range overview measuring cell water meters without remote reading output

Nominal flow rate [m³/h]	Con-nect. thread	Max. water temperature [°C]	Stock no.	Product no.
2.5	G 2"	30	JXF:WMK10.D	**WMK10.D**
2.5	G 2"	90	JXF:WMW10.D	**WMW10.D**

Mechanical water meters
Accessories for mechanical water meters

Communication modules

Product Title	Stock no.	Product no.
M-bus add-on module for water meters WF.30.. / WM.10..	S55563-F158	**WFZ311**
Add-on radio module WFZ661 for water meters WF.30.. / WM.10..	S55563-F147	**WFZ661**
Pulse add-on module with reed contact for WF.240.. water meters	S55563-F134	**WFZ44**
Pulse add-on module with reed contact and namur circuit for WF.240.. water meters	S55563-F135	**WFZ43**

Mounting material for single-jet water meters

Product Title	Stock no.	Product no.
Adapter set from G ¾" to 1", incl. gaskets	JXF:WZM-V110	**WZM-V110**
Extension set from 110 mm G ¾" to 130 mm G ¾", incl. gaskets	JXF:WZM-V130	**WZM-V130**
Extension set from 110 mm G ¾" to 165 mm G ¾", incl. gaskets	JXF:WZM-V165	**WZM-V165**
Extension set from 110 mm G ¾" to 190 mm G 1", incl. gaskets	JXF:WZM-V190	**WZM-V190**
Spacer G ¾", length 80 mm	JXF:WFZ.R80	**WFZ.R80**
Spacer G ¾", length 110mm	JXF:WFZ.R110	**WFZ.R110**
Spacer G 1", length 130 mm	JXF:WFZ.R130	**WFZ.R130**
WFZ.R2 Mounting kit	S55563-F151	**WFZ.R2**
WFZ.R2-1 Mounting kit	S55563-F152	**WFZ.R2-1**
Mounting kit for washstand water meter	JXF:WFZ.W	**WFZ.W**
Mounting kit for tap water meter	JXF:WFZ.Z	**WFZ.Z**
Self-lock seal with sealing wire	JXF:WFZ.P	**WFZ.P**
Torque Screwdriver, Torx Plus™	JXF:FZ201-009	**FZ201-009**

Mounting material for capsule water meters

Product Title	Data sheet	Stock no.	Product no.
EAT cover		JXF:WME.VRING	**JXF:WME.VRING**
Self-lock seal with sealing wire		JXF:WFZ.P	**WFZ.P**
Single-pipe connecting piece		JXF:WME.G20/OV/H	**JXF:WME.G20/OV/H**
Single-pipe connecting piece (EAT)		JXF:WME.L15/OV/H	**JXF:WME.L15/OV/H**
Single-pipe connecting piece (EAT)		JXF:WME.L18/OV/H	**JXF:WME.L18/OV/H**
Single-pipe connecting piece (EAT)		JXF:WME.L22/OV/H	**JXF:WME.L22/OV/H**
Mounting aid		JXF:WME.EINPUTZ1	**JXF:WME.EINPUTZ1**
Profiled seal		JXF:WME.PRODICHT	**JXF:WME.PRODICHT**
Mounting key		JXF:WMZ.K5	**JXF:WMZ.K5**
Torque Screwdriver, Torx Plus™		JXF:FZ201-009	**FZ201-009**
Sealing ring	A6V12128928	JXF:FKK0139	**JXF:FKK0139**
Round cover with thrust tube in chrome look	A6V12128928	JXF:WMXI.KCR1-001	**JXF:WMXI.KCR1-001**
Round cover with thrust tube in white	A6V12128928	JXF:WMXI.KBL1-001	**JXF:WMXI.KBL1-001**
Inner extensions for thrust tube (5 pcs./PU) in chrome look	A6V12128928	JXF:WMXI.KCR1-002	**JXF:WMXI.KCR1-002**
Inner extensions for thrust tube (5 pcs./PU) in white	A6V12128928	JXF:WMXI.KBL1-002	**JXF:WMXI.KBL1-002**
Outer extensions for thrust tube (5 pcs./PU) in chrome look	A6V12128928	JXF:WMXI.KCR1-003	**JXF:WMXI.KCR1-003**
Outer extensions for thrust tube (5 pcs./PU) in white	A6V12128928	JXF:WMXI.KBL1-003	**JXF:WMXI.KBL1-003**
Square front panel with chrome-look push		JXF:WMXI.KCR1-004	**JXF:WMXI.KCR1-004**

Mounting material for capsule water meters

Product Title	Data sheet	Stock no.	Product no.
Square front panel with white push tube		JXF:WMXI.KBL1-004	**JXF:WMXI.KBL1-004**
Blind cover chrome look (set 5 pcs.)		JXF:WMXI.KCR1-005	**JXF:WMXI.KCR1-005**
Blind cover white (set 5 pcs.)		JXF:WMXI.KBL1-005	**JXF:WMXI.KBL1-005**

Software and Tools

Product Title	Data sheet	Stock no.	Product no.
ACT50 – Readout and parameterization software	N2887	JXF:ACT50	**ACT50**
ACT60 – Readout and parameterization app for WTT726-FE7300		JXF:ACT60	**ACT60**
Infrared read head (with USB interface)	N2886	JXF:WFZ.IRDA-USB	**WFZ.IRDA-USB**
Triggering tool for radio telegrams		JXF:WFZ.PS	**WFZ.PS**

WF.636..

Electronic impeller type cold or hot water meter

The electronic single-jet impeller type water meters are of compact design and used for measuring the consumption of cold water (WFK636..) or hot water (WFW636..). They are available as wall-mounted dry runner versions in different sizes, with a flow measuring section body made of brass. The cummulated consumption values determined by the meter can be read out on the meter itself or remotely via M-bus radio (AMR / walk-by). The water meters are available in S-mode or C-mode communication.

Metrologically, the water meters are classified as follows:
• Horizontal: R80
• Vertical: R40

They are used primarily in domestic water systems in residential or non-residential buildings and in water supply systems.
The meters are supplied with Installation Instructions in the following languages: Bulgarian, Croatian, Czech, Dutch, English, Finnish, French, German, Greek, Hungarian, Italian, Lithuanian, Norwegian, Polish, Romanian, Russian, Slovakian, Slovenian, Spanish, Turkish.

Data sheet	A6V12128928
PN class	PN 16
Battery life	10 years
Display	8 digits on LCD

Range overview WF.636..

Flow rate Q3	Mounting length [mm]	Con-nect. thread	Max. water temperature	Communi-cation	Stock no.	Product no.
4	130	G 1"	30	Wireless M-Bus S-Mode	JXF:WFK636.E130	**JXF:WFK636.E130**
4	130	G 1"	30	Wireless M-Bus C-Mode	JXF:WFK636.E13C	**JXF:WFK636.E13C**
4	130	G 1"	90	Wireless M-Bus S-Mode	JXF:WFW636.E130	**JXF:WFW636.E130**
4	130	G 1"	90	Wireless M-Bus C-Mode	JXF:WFW636.E13C	**JXF:WFW636.E13C**
2.5	80	G ¾"	30	Wireless M-Bus S-Mode	S55560-F116	**WFK636.D080**
2.5	80	G ¾"	30	Wireless M-Bus C-Mode	S55560-F120	**WFK636.D08C**
2.5	110	G ¾"	30	Wireless M-Bus S-Mode	S55560-F117	**WFK636.D110**
2.5	110	G ¾"	30	Wireless M-Bus C-Mode	S55560-F121	**WFK636.D11C**
2.5	80	G ¾"	90	Wireless M-Bus S-Mode	S55560-F118	**WFW636.D080**
2.5	80	G ¾"	90	Wireless M-Bus C-Mode	S55560-F122	**WFW636.D08C**
2.5	110	G ¾"	90	Wireless M-Bus S-Mode	S55560-F119	**WFW636.D110**
2.5	110	G ¾"	90	Wireless M-Bus C-Mode	S55560-F123	**WFW636.D11C**

Accessories

Product Title	Data sheet	Stock no.	Product no.
Adapter set from G ¾" to 1", incl. gaskets		JXF:WZM-V110	**WZM-V110**
Extension set from 110 mm G ¾" to 130 mm G ¾", incl. gaskets		JXF:WZM-V130	**WZM-V130**
Extension set from 110 mm G ¾" to 165 mm G ¾", incl. gaskets		JXF:WZM-V165	**WZM-V165**
Extension set from 110 mm G ¾" to 190 mm G 1", incl. gaskets		JXF:WZM-V190	**WZM-V190**
Spacer G ¾", length 80 mm		JXF:WFZ.R80	**WFZ.R80**

New Product

Accessories

Product Title	Data sheet	Stock no.	Product no.
Spacer G ¾", length 110mm		JXF:WFZ.R110	**WFZ.R110**
Spacer G 1", length 130 mm		JXF:WFZ.R130	**WFZ.R130**
WFZ.R2 Mounting kit		S55563-F151	**WFZ.R2**
WFZ.R2-1 Mounting kit		S55563-F152	**WFZ.R2-1**
Self-lock seal with sealing wire		JXF:WFZ.P	**WFZ.P**

Software and Tools

Product Title	Data sheet	Stock no.	Product no.
ACT50 – Readout and parameterization software	N2887	JXF:ACT50	**ACT50**
ACT60 – Readout and parameterization app for WTT726-FE7300		JXF:ACT60	**ACT60**
Infrared read head (with USB interface)	N2886	JXF:WFZ.IRDA-USB	**WFZ.IRDA-USB**
Triggering tool for radio telegrams		JXF:WFZ.PS	**WFZ.PS**

WM.636..

Electronic multi-jet measuring capsule water meters

The electronic multi-jet measuring capsule water meters are of compact design and used for measuring the consumption of cold water (WMK636..) or hot water (WMW636..).
In most cases, the single-pipe connection piece (EAT) is already present and embedded in the masonry. The measuring capsule is screwed on accordingly.
The cummulated consumption values determined by the meter can be read out on the meter itself or remotely via M-bus radio (AMR / walk-by).

Metrologically, the water meters are classified as follows:
- Horizontal: R80
- Vertical: R40

They are used primarily in existing domestic water systems in residential or non-residential buildings and in water supply systems.

The meters are supplied with Installation Instructions in the following languages: Bulgarian, Croatian, Czech, Dutch, English, Finnish, French, German, Greek, Hungarian, Italian, Lithuanian, Norwegian, Polish, Romanian, Russian, Slovakian, Slovenian, Spanish, Turkish.

Data sheet	A6V12128928
PN class	PN 16
Battery life	10 years
Display	8 digits on LCD

Range overview WM.636..

Flow rate Q3	Con-nect. thread	Max. water temperature	Communi-cation	Stock no.	Product no.
2.5	M77 x 1.5 mm	30	Wireless M-Bus S-Mode	JXF:WMK636.DAL00	**JXF:WMK636.DAL00**
2.5	G 2"	30	Wireless M-Bus S-Mode	JXF:WMK636.DIS00	**JXF:WMK636.DIS00**
2.5	M62 x 2 mm	30	Wireless M-Bus S-Mode	JXF:WMK636.DTE00	**JXF:WMK636.DTE00**
2.5	M77 x 1.5 mm	90	Wireless M-Bus S-Mode	JXF:WMW636.DAL00	**JXF:WMW636.DAL00**
2.5	G 2"	90	Wireless M-Bus S-Mode	JXF:WMW636.DIS00	**JXF:WMW636.DIS00**
2.5	M62 x 2 mm	90	Wireless M-Bus S-Mode	JXF:WMW636.DTE00	**JXF:WMW636.DTE00**

Accessories

Product Title	Data sheet	Stock no.	Product no.
EAT cover		JXF:WME.VRING	**JXF:WME.VRING**
Self-lock seal with sealing wire		JXF:WFZ.P	**WFZ.P**
Single-pipe connecting piece		JXF:WME.G20/OV/H	**JXF:WME.G20/OV/H**
Single-pipe connecting piece (EAT)		JXF:WME.L15/OV/H	**JXF:WME.L15/OV/H**
Single-pipe connecting piece (EAT)		JXF:WME.L18/OV/H	**JXF:WME.L18/OV/H**
Single-pipe connecting piece (EAT)		JXF:WME.L22/OV/H	**JXF:WME.L22/OV/H**
Mounting aid		JXF:WME.EINPUTZ1	**JXF:WME.EINPUTZ1**
Profiled seal		JXF:WME.PRODICHT	**JXF:WME.PRODICHT**
Mounting key		JXF:WMZ.K5	**JXF:WMZ.K5**
Sealing ring	A6V12128928	JXF:FKK0139	**JXF:FKK0139**

Accessories

Product Title	Data sheet	Stock no.	Product no.
Guide piece for M77 x 1.5 mm capsule water meter	A6V12128928	JXF:FKK0173	**JXF:FKK0173**
O-ring for M77 x 1.5 mm capsule water meter	A6V12128928	JXF:FKS0034	**JXF:FKS0034**
Round cover with thrust tube in chrome look	A6V12128928	JXF:WMXI.KCR1-001	**JXF:WMXI.KCR1-001**
Round cover with thrust tube in white	A6V12128928	JXF:WMXI.KBL1-001	**JXF:WMXI.KBL1-001**
Inner extensions for thrust tube (5 pcs./PU) in chrome look	A6V12128928	JXF:WMXI.KCR1-002	**JXF:WMXI.KCR1-002**
Inner extensions for thrust tube (5 pcs./PU) in white	A6V12128928	JXF:WMXI.KBL1-002	**JXF:WMXI.KBL1-002**
Outer extensions for thrust tube (5 pcs./PU) in chrome look	A6V12128928	JXF:WMXI.KCR1-003	**JXF:WMXI.KCR1-003**
Outer extensions for thrust tube (5 pcs./PU) in white	A6V12128928	JXF:WMXI.KBL1-003	**JXF:WMXI.KBL1-003**
Square front panel with chrome-look push		JXF:WMXI.KCR1-004	**JXF:WMXI.KCR1-004**
Square front panel with white push tube		JXF:WMXI.KBL1-004	**JXF:WMXI.KBL1-004**
Blind cover chrome look (set 5 pcs.)		JXF:WMXI.KCR1-005	**JXF:WMXI.KCR1-005**
Blind cover white (set 5 pcs.)		JXF:WMXI.KBL1-005	**JXF:WMXI.KBL1-005**

Software and Tools

Product Title	Data sheet	Stock no.	Product no.
ACT50 – Readout and parameterization software	N2887	JXF:ACT50	**ACT50**
ACT60 – Readout and parameterization app for WTT726-FE7300		JXF:ACT60	**ACT60**
Infrared read head (with USB interface)	N2886	JXF:WFZ.IRDA-USB	**WFZ.IRDA-USB**
Triggering tool for radio telegrams		JXF:WFZ.PS	**WFZ.PS**

Impeller type heat/cooling energy meters
Impeller type heat/cooling energy meters WFM5.. / WFN5..

WF.5..

Electronic impeller type heat and heat / cooling energy meters

The compact, electronic and mains-independent impeller type heat and cool energy meters WF.5.. are used for the physically correct acquisition of energy consumption. They are available as wall-mounting versions in different sizes and have been developed for heat, combined heat/cooling or solar energy metering.
The devices consist of flow measuring section, 2 ready connected temperature sensors and a processor which – based on flow rate and temperature differential – calculates the energy consumption.
The consumption values can be read out either on the meter itself or from a remote location. Using modules, the noncommunicating meters (WF.50..) can be upgraded for readout via AMR/walk-by (WFZ662 / WFZ662C) or M-bus (WFZ51).
In addition to modules, the meters with M-bus communication (WF.54..) are equipped with 2 pulse inputs for reading out 2 water meters (Reed contact).
The WF.5.. are used primarily in plants with central production of heat or heat and cooling energy, where the energy is supplied via zones to several individual consumers in the building.

The meters are supplied with Operating and Mounting Instructions in the following languages:
Bulgarian, Croatian, Czech, Dutch, English, Finnish, French, German, Greek, Hungarian, Italian, Lithuanian, Norwegian, Polish, Slovakian, Slovenian, Spanish and Turkish

Data sheet	CE2N5323, A6V10800216
Measurement accuracy	MID class 3
Operating voltage	DC 3 V
Voltage supply	Lithium battery
Standard	DIN EN 1434
Battery life	> 10 years
PN class	PN 16
Measuring range, temperature	Heat: 15...105 °C Refrigeration range: 0.2...24 °C
Temperature response threshold	Heat: 0.2 K Cold: 0.2 K
Sensing element, temperature	Pt1000
Sensor	DS Ø5.0x45 mm
Cable length, sensor	1.5 m
Due Date	12.31
Display	kWh
Mounting location	Meter: return Sensor in the flow: directly immersed or in approved protection pockets Sensor in the return: integrated in the return, directly immersed

Range overview WF.5..

Nominal flow rate [m³/h]	Mounting length [mm]	Con-nect. thread	Communi-cation	Type of Meter	Con-nect. thread	Stock no.	Product no.
0.6	110	G ¾ "	IrDA + module interface	Heat	G ¾"	S55561-F177	**WFM501-E000H0**
0.6	110	G ¾ "	IrDA, M-bus & pulse inputs	Heat	G ¾"	S55561-F239	**WFM541-G000H0**
1.5	110	G ¾ "	IrDA + module interface	Heat	G ¾"	S55561-F178	**WFM502-E000H0**
1.5	80	G ¾ "	IrDA, M-bus & pulse inputs	Heat	G ¾"	S55561-F240	**WFM542-C000H0**
1.5	110	G ¾ "	IrDA, M-bus & pulse inputs	Heat	G ¾"	S55561-F241	**WFM542-G000H0**
2.5	130	G 1 "	IrDA + module interface	Heat	G 1"	S55561-F179	**WFM503-J000H0**
2.5	130	G 1 "	IrDA, M-bus & pulse inputs	Heat	G 1"	S55561-F242	**WFM543-L000H0**

Meter mounting for WFM542-C000H0: return; Sensor in the flow: directly immersed or in approved protection pockets; Sensor in the return: not integrated, directly immersed or in approved protection pockets.

Electronic impeller type heat and heat/cooling energy meter set with RF communication

WF.6..

The impeller type heat and heat/cooling energy meter set WF.6.. consists of a non-communicative meter and a preinstalled RF communication module.
The electronic, mains-independent impeller type heat and heat/cooling energy meter is of compact design and used for the physically correct acquisition of energy consumption. The meter consists of a flow measuring section, two ready connected temperature sensors and an integrated processor which – based on flow rate and temperature differential – calculates the energy consumption.
The consumption values can be read out either on the meter itself or from a remote location via AMR or walk-by.
The WF.6.. are used primarily in plants with central production of heat and heat/cooling energy, where the energy is supplied via zones to several individual consumers in the building.

Data sheet	A6V11259309
Measurement accuracy	MID class 3
Standard	DIN EN 1434
Voltage supply	Lithium battery
Operating voltage	DC 3 V
Battery life	> 10 years
PN class	PN 16
Measuring range, temperature	Heat: 15...105 °C Refrigeration range: 0.2...24 °C
Temperature response threshold	Heat: 0.2 K Cold: 0.2 K
Sensing element, temperature	Pt1000
Sensor	DS Ø5.0x45 mm
Cable length, sensor	1.5 m
Due Date	12.31
Display	kWh
Mounting location	Return

Range overview WFM6.. / WFN6..

Nominal flow rate [m³/h]	Mounting length [mm]	Con-nect. thread ["]	Communi-cation	Type of Meter	Con-nect. thread	Stock no.	Product no.
0.6	110	G ¾	IrDA interface	Heat	G ¾"	S55561-F260	**WFM681-G000H0**
1.5	110	G ¾	IrDA interface	Heat	G ¾"	S55561-F261	**WFM682-G000H0**
2.5	130	G 1	IrDA interface	Heat	G 1"	S55561-F262	**WFM683-L000H0**

Impeller type heat/cooling energy meters
Accessories for impeller type heat meters

Screwed type meters

Product Title	Stock no.	Product no.
Installation set Rp ½“ - ball valve Rp ½“ with coupling nut G ¾“ and flat gaskets	JXF:HMXIK001-001	**HMXIK001-001**
Installation set Rp ¾“- ball valve Rp ¾“ with coupling nut G ¾“ and flat gaskets	JXF:HMXIK001-002	**HMXIK001-002**
Installation set Rp 1“- ball valve Rp 1“ with coupling nut G ¾“ and flat gaskets	JXF:HMXIK001-003	**HMXIK001-003**
Installation set Rp 1“- ball valve Rp 1“ with coupling nut G 1“ and flat gaskets	JXF:HMXIK001-004	**HMXIK001-004**
Installation set Rp ¾“- ball valve Rp ¾“ with coupling nut G 1“ and flat gaskets	JXF:HMXIK001-005	**HMXIK001-005**

Installation sets fittings

Product Title	Stock no.	Product no.
Installation set R ½" - fitting R ½“ with coupling nut G ¾“ and flat gaskets	JXF:HMXIK002-001	**HMXIK002-001**
Installation set R ¾“ - fitting R ¾“ with coupling nut G ¾“ and flat gaskets	JXF:HMXIK002-002	**HMXIK002-002**
Installation set R 1“ - fitting R 1“ with coupling nut G ¾“ and flat gaskets	JXF:HMXIK002-003	**HMXIK002-003**
Installation set R 1“ - fitting R 1“ with coupling nut G 1“ and flat gaskets	JXF:HMXIK002-004	**HMXIK002-004**
Installation set R ¾“ - fitting R ¾“ with coupling nut G 1“ and flat gaskets	JXF:HMXIK002-005	**HMXIK002-005**

Accessories

Product Title	Stock no.	Product no.
Fitting R ½“ x G ¾“	JXF:FKM0018	**FKM0018**
Fitting R ¾“ x G ¾“	JXF:FKM0019	**FKM0019**
Fitting R 1“ x G ¾“	JXF:FKM0020	**FKM0020**
Fitting R ¾“ x G 1“	JXF:FKM0021	**FKM0021**
Fitting R 1“ x G 1"	JXF:FKM0022	**FKM0022**
Ball valve Rp ½“ with thread	JXF:FKM0023	**FKM0023**
Ball valve Rp ¾“ with thread	JXF:FKM0024	**FKM0024**
Ball valve Rp 1" with thread	JXF:FKM0025	**FKM0025**
Ball valve Rp ½“ with coupling nut and thread	JXF:FKM0026	**FKM0026**
T-piece R ½“ x G ¼“	JXF:FKM0035	**FKM0035**
T-piece R ¾“ x G ¼“	JXF:FKM0036	**FKM0036**
T-piece R 1“ x G ¼“	JXF:FKM0037	**FKM0037**
Immersion sleeve G ¼“	JXF:FKM0038	**FKM0038**
Immersion sleeve G ¼“	JXF:FKM0039	**FKM0039**
Temperatur sensor sleeve G ¼“	JXF:FKM0049	**FKM0049**
Temperatur sensor sleeve M10x1 mm	JXF:FKM0050	**FKM0050**
Immersion sleeve 5.0 mm, M10x1 mm	JXF:FKM0051	**FKM0051**
Immersion sleeve 5.2 mm, M10x1 mm	JXF:FKM0052	**FKM0052**
Spacer G ¾“, length 80 mm	JXF:FKM0070	**FKM0070**
Spacer G ¾“, length 110 mm	JXF:FKM0074	**FKM0074**
Spacer G 1", length 130 mm	JXF:FKM0075	**FKM0075**
Ball valve R ½" with coupling nut G ¾"	JXF:FKM0076	**JXF:FKM0076**
Ball valve R ¾" with coupling nut G ¾"	JXF:FKM0077	**JXF:FKM0077**
Ball valve Rp 1" with union nut G ¾"	JXF:FKM0078	**JXF:FKM0078**
Ball valve Rp ¾" with union nut G 1"	JXF:FKM0079	**JXF:FKM0079**
Ball valve Rp 1" with union nut G 1"	JXF:FKM0080	**JXF:FKM0080**
Flat gasket ¾“	JXF:FKS0005	**FKS0005**
Flat gasket 1“	JXF:FKS0006	**FKS0006**
Seal	JXF:FNS0001	**FNS0001**
M-bus cable for WF.54..	JXF:FKL0012	**JXF:FKL0012**
Impulse cable for WF.54..	JXF:FKL0013	**JXF:FKL0013**
Wall bracket	JXF:HMRIK001-001	**HMRIK001-001**
Adapter set from G ¾“ to G 1“	JXF:HMXIK003-001	**HMXIK003-001**
Extension set from G ¾“ to G 1“	JXF:HMXIK003-002	**HMXIK003-002**
Extension set from 110 mm G ¾“ to 130 mm G ¾“	JXF:HMXIK003-003	**HMXIK003-003**
Extension set from 110 mm G ¾“ to 165 mm G ¾“	JXF:HMXIK003-004	**HMXIK003-004**

Accessories

Product Title	Stock no.	Product no.
Extension set from 110 mm G ¾" to 190 mm G 1"	JXF:HMXIK003-005	**HMXIK003-005**
Temperature sensor screwed	JXF:HMXIK004-001	**HMXIK004-001**
Sensor accessories set	JXF:BOZ5005	**JXF:BOZ5005**

Add-on module for WF..5..

Product Title	Data sheet	Stock no.	Product no.
M-bus add-on module for WFx5.. meters	N5323	S55563-F131	**WFZ51**
Radio module with integrated antenna for WFx5.. meters, C-mode	N5323	S55563-F165	**WFZ662C**
Radio module with integrated antenna for WFx5.. meters, S-mode	N5323	S55563-F153	**WFZ662**

Programming tools and software for impeller type heat meters

Product Title	Stock no.	Product no.
ACT50 – Readout and parameterization software	JXF:ACT50	**ACT50**
ACT60 – Readout and parameterization app for WTT726-FE7300	JXF:ACT60	**ACT60**
Infrared read head (with USB interface)	JXF:WFZ.IRDA-USB	**WFZ.IRDA-USB**
Triggering tool for radio telegrams	JXF:WFZ.PS	**WFZ.PS**

Ultrasonic heat/cooling energy meters
Ultrasonic heat/cooling energy meters WS.5..

WS.5..

Ultrasonic heat and cooling energy meters

The WSM5.. heat meters and WSN5.. heat and cooling energy meters acquire the volume flow statically based on the ultrasonic measuring principle. They are available as wall-mounting versions in different sizes. The meters excel in great measuring accuracy, a volume measuring section made of high-tech plastic, and wear resistance.
The consumption values acquired by the meter can be read out either on the meter itself or from a remote location. The meter transmits the current consumption value, the monthly values, the set day value and error messages to the respective data collector.
The processor can be removed (cable length 1.5 m). The display informs the user about the amount of energy consumed.

The WSM5.. and WSN5.. are used in residential or commercial buildings to acquire the amount of heat or cooling energy consumed.

The meters are supplied with Operating and Mounting Instructions in the following languages: Bulgarian, Chinese, Croatian, Czech, Dutch, English, French, German, Greek, Hungarian, Italian, Norwegian, Polish, Russian, Slovakian, Slovenian, Spanish, and Turkish

Data sheet	N5372
Measurement accuracy	MID class 2
Standard	EN 1434
Voltage supply	Lithium battery
Operating voltage	Battery operation: 3.6 V
PN class	PN 16
Sensing element, temperature	Pt500
Sensor	PL Ø5.2x45 mm
Cable length, sensor	1.5 m
Due Date	01.01
Display	kWh
Temperature range electronic unit	0...180 °C
Temperature range volume measuring section	5...90 °C
Mounting location	Meter: return Sensor in the flow: selectable, directly/indirectly immersed Sensor in the return: integrated in the return, directly immersed

Range overview WS.5..

Nominal flow rate [m³/h]	Mounting length [mm]	Con-nect. thread	Communi-cation	Battery life	Stock no.	Product no.
0.6	110	G ¾"		11 years	S55561-F133	**WSM506-0E**
0.6	110	G ¾"	M-bus	11 years	S55561-F194	**WSM506-BE**
0.6	110	G ¾"	M-bus RF	11 years	S55561-F246	**WSM506-FE**
1.5	110	G ¾"		11 years	S55561-F135	**WSM515-0E**
1.5	110	G ¾"	M-bus	11 years	S55561-F195	**WSM515-BE**
1.5	110	G ¾"	M-bus RF	11 years	S55561-F247	**WSM515-FE**
2.5	130	G 1"		11 years	S55561-F137	**WSM525-0E**
2.5	130	G 1"	M-bus	11 years	S55561-F196	**WSM525-BE**
2.5	130	G 1"	M-bus RF	11 years	S55561-F248	**WSM525-FE**
0.6	110	G ¾"	M-bus	11 years	S55561-F278	**WSN506-BE**
0.6	110	G ¾"	M-bus RF	11 years	S55561-F281	**WSN506-FE**
1.5	110	G ¾"	M-bus	11 years	S55561-F279	**WSN515-BE**
1.5	110	G ¾"	M-bus RF	11 years	S55561-F282	**WSN515-FE**
2.5	130	G 1"	M-bus	11 years	S55561-F280	**WSN525-BE**
2.5	130	G 1"	M-bus RF	11 years	S55561-F283	**WSN525-FE**

Ball valves

Product Title	Stock no.	Product no.
Ball valve Rp ½" for sensor DS M10x1 mm, length 27.5 mm or Ø 5.2x45 mm	S55563-F104	**WZT-K12**
Ball valve Rp ¾" for sensor DS M10x1 mm, length = 27.5 mm or Ø 5.2x45 mm	S55563-F120	**WZT-K34**
Ball valve Rp 1" for sensor DS M10x1 mm, length 27.5 mm or Ø 5.2x45 mm	S55563-F119	**WZT-K1**

Adapter and accessories

Product Title	Stock no.	Product no.
Installation kit G ¾", for threaded connection R ½"	S55563-F124	**WZM-E34**
Mounting kit G1", for threaded connection R ¾"	S55563-F123	**WZM-E1**
Extension set from 110 mm G ¾" to 130 mm G ¾", incl. gaskets	JXF:WZM-V130	**WZM-V130**
Adapter M10x1 mm x G 1/2 B" for sensor DS M10x1 mm / d=5.2 x 45 mm	S55563-F116	**WZT-A12**
Protection pocket G ½ B", length 35 mm, made of brass, for temperature sensor Ø 5.2x45 mm	S55563-F103	**WZT-M35**
Welding sleeve with threaded hole for temperature sensor DS M10×1 mm	S55563-F121	**WZT-G10**
Spacer G ¾", length 110 mm, incl. 2 flat gaskets	LYU:WZM-G110	**WZM-G110**
Spacer G 1", length 130 mm, incl. 2 flat gaskets	LYU:WZM-G130	**WZM-G130**

Programming accessories for ultrasonic meters

Product Title	Stock no.	Product no.
UltraAssist Profi, first license, CD with USB mini-dongle	LYU:WZX-UA-PEU-MINI	**WZX-UA-PEU-MINI**
UltraAssist Profi, second license, USB mini-dongle	LYU:WZX-UA-PFU-MINI	**WZX-UA-PFU-MINI**

Ultrasonic heat/cooling energy meters
Ultrasonic heat/cooling energy meters WS.6..

WS.6..

Ultrasonic heat and heat / cooling energy meters

The WSM6.. heat meters and WSN6.. heat and cooling energy meters acquire the volume flow statically based on the ultrasonic measuring principle. They are available as wall-mounting versions in different sizes. The meters excel in great measuring accuracy, a volume measuring section made of brass, and wear resistance.
The consumption values acquired by the meter can be read out either on the meter itself or from a remote location. The meter transmits the current consumption value, the monthly values, the set day value and error messages to the respective data collector.
The processor can be removed (cable length 1.5 m). The display informs the user about the amount of energy consumed.
The WSM6.. and WSB6.. are used in residential or commercial buildings to acquire the amount of heat or cooling energy consumed.

The meters are supplied with Operating and Mounting Instructions in the following languages: Bulgarian, Chinese, Croatian, Czech, Dutch, English, French, German, Greek, Hungarian, Italian, Norwegian, Polish, Russian, Slovakian, Slovenian, Spanish, and Turkish.

Data sheet	N5372
Type of Meter	Heat Cooling
Measurement accuracy	Heat: MID class 2 Cold: EN 1434
Standard	EN 1434
Voltage supply	Lithium battery
Operating voltage	Battery operation: 3.6 V
PN class	PN 16
Sensing element, temperature	Pt500
Sensor	Type Ø 5.2 x 45 mm
Cable length, sensor	1.5 m
Due Date	01.01
Display	kWh
Mounting location	Meter: return Sensor in the flow: selectable, directly/indirectly immersed Sensor in the return: integrated in the return, directly immersed
Dimensions (W x H x D)	Elektronische Einheit: 116 x 71 x 32 mm Durchfluss-Messstrecke: 110 x 43 x 64 mm (ohne Kabel) mm

Range overview WS.6..

Nominal flow rate [m³/h]	Mounting length [mm]	Con-nect. thread	Communi-cation	Battery life	Stock no.	Product no.
0.6	110	G ¾"	M-bus	11 years	S55561-F249	**WSM606-BE**
0.6	110	G ¾"	M-bus	11 years	S55561-F266	**WSN606-BE**
1.5	110	G ¾"	M-bus	11 years	S55561-F250	**WSM615-BE**
1.5	110	G ¾"	M-bus	11 years	S55561-F267	**WSN615-BE**
2.5	130	G 1"	M-bus	11 years	S55561-F251	**WSM625-BE**
2.5	130	G 1"	M-bus	11 years	S55561-F268	**WSN625-BE**

Mounting sets

Product Title	Stock no.	Product no.
Installation kit G ¾", for threaded connection R ½"	S55563-F124	**WZM-E34**
Mounting kit G1", for threaded connection R ¾"	S55563-F123	**WZM-E1**

Ball valves

Product Title	Stock no.	Product no.
Ball valve Rp ½" for sensor DS M10x1 mm, length 27.5 mm or Ø 5.2x45 mm	S55563-F104	**WZT-K12**
Ball valve Rp ¾" for sensor DS M10x1 mm, length = 27.5 mm or Ø 5.2x45 mm	S55563-F120	**WZT-K34**
Ball valve Rp 1" for sensor DS M10x1 mm, length 27.5 mm or Ø 5.2x45 mm	S55563-F119	**WZT-K1**

Adapter and accessories

Product Title	Stock no.	Product no.
Adapter M10x1 mm x G 1/2 B" for sensor DS M10x1 mm / d=5.2 x 45 mm	S55563-F116	**WZT-A12**
Protection pocket G ½ B", length 35 mm, made of brass, for temperature sensor Ø 5.2x45 mm	S55563-F103	**WZT-M35**
Welding sleeve with threaded hole for temperature sensor DS M10×1 mm	S55563-F121	**WZT-G10**
Spacer G ¾", length 110 mm, incl. 2 flat gaskets	LYU:WZM-G110	**WZM-G110**
Spacer G 1", length 130 mm, incl. 2 flat gaskets	LYU:WZM-G130	**WZM-G130**

Programming accessories for ultrasonic meters

Product Title	Stock no.	Product no.
UltraAssist Profi, first license, CD with USB mini-dongle	LYU:WZX-UA-PEU-MINI	**WZX-UA-PEU-MINI**
UltraAssist Profi, second license, USB mini-dongle	LYU:WZX-UA-PFU-MINI	**WZX-UA-PFU-MINI**

Ultrasonic heat/cooling energy meters
Ultrasonic heat/cooling energy meters WS.8..

WS.8..

Ultrasonic heat and heat/cooling energy meter

The WSM8.. is a measuring instrument used for the physically correct acquisition of energy consumption. The device consists of a flow measuring section made of brass, two temperature sensors, and an electronic unit which calculates the energy consumption from the flow and the temperature differential. The processor unit can be equipped with different sensors, up to four batteries and a communication module. In addition up to two impulse water meters can be readout.
The consumption values acquired by the meter can be read out either on the meter itself or from a remote location. The meter transmits the current consumption value, the monthly values, the set day value and error messages to the respective data collector. The processor can be removed (cable length 1.5 m). The display informs the user about the amount of energy consumed.

The Mounting and Operating Instructions are supplied in 18 languages: Bulgarian, Chinese, Croatian, Czech, Dutch, English, French, German, Greek, Hungarian, Italian, Norwegian, Polish, Russian, Slovakian, Slovenian, Spanish and Turkish.

Data sheet	A6V11905989
Measurement accuracy	Class II
Standard	EN 1434
Voltage supply	Lithium battery
Operating voltage	3,6 V
PN class	PN 16
Sensing element, temperature	Pt500
Cable length, sensor	1.5 m
Due Date	01.01
Mounting location	Meter mounting: In return Sensor mounting: Return sensor, integrated in the flow measuring section
Dimensions (W x H x D)	105 x 138 x 44 mm

Range overview WS.8..

Nominal flow rate [m³/h]	Mounting length [mm]	Con-nect. thread	Communi-cation	Battery life	Stock no.	Product no.
0.6	110	G ¾"	M-bus	6 years	S55561-F269	**WSM805-FBBAE3A**
0.6	110	G ¾"	M-bus	6 years	S55561-F272	**WSM805-FHBAE3A**
1.5	110	G ¾"	M-bus	6 years	S55561-F270	**WSM821-FBBAE3A**
1.5	110	G ¾"	M-bus	6 years	S55561-F273	**WSM821-FHBAE3A**
2.5	130	G 1"	M-bus	6 years	S55561-F271	**WSM836-FBBAE3A**
2.5	130	G 1"	M-bus	6 years	S55561-F274	**WSM836-FHBAE3A**
3.5	260	G 1¼"	M-bus	6 years	S55561-F284	**WSM843-FDBAE3A**
6	260	G 1¼"	M-bus	6 years	S55561-F285	**WSM853-FDBAE3A**
0.6	110	G ¾"	M-bus	11 years	S55561-F275	**WSN805-FBBBF3A**
1.5	110	G ¾"	M-bus	11 years	S55561-F276	**WSN821-FBBBF3A**
2.5	130	G 1"	M-bus	11 years	S55561-F277	**WSN836-FBBBF3A**
3.5	260	G 1¼"	M-bus	11 years	S55561-F286	**WSN843-FDBBF3A**
6	260	G 1¼"	M-bus	11 years	S55561-F287	**WSN853-FDBBF3A**

The meater can be supplied via M-bus. In this case the battery serves as a backup battery.

Mounting sets

Product Title	Stock no.	Product no.
Installation kit G ¾", for threaded connection R ½"	S55563-F124	**WZM-E34**
Mounting kit G1", for threaded connection R ¾"	S55563-F123	**WZM-E1**
Installation kit G1 1/4 x R1"	S55563-F125	**WZM-E54**

Spacers and sealing disks

Product Title	Stock no.	Product no.
Spacer G ¾", length 110 mm, incl. 2 flat gaskets	LYU:WZM-G110	**WZM-G110**
Spacer G 1", length 130 mm, incl. 2 flat gaskets	LYU:WZM-G130	**WZM-G130**
Spacer G 1¼", length 260 mm, incl. 2 flat gaskets	LYU:WZM-G260	**WZM-G260**
Sealing disk G 1¼", for threaded connection R 1"	LYU:9060944004	**9060944004**

Ball valves

Product Title	Stock no.	Product no.
Ball valve Rp ½" for sensor DS M10x1 mm, length 27.5 mm or Ø 5.2x45 mm	S55563-F104	**WZT-K12**
Ball valve Rp ¾" for sensor DS M10x1 mm, length = 27.5 mm or Ø 5.2x45 mm	S55563-F120	**WZT-K34**
Ball valve Rp 1" for sensor DS M10x1 mm, length 27.5 mm or Ø 5.2x45 mm	S55563-F119	**WZT-K1**

Accessories

Product Title	Stock no.	Product no.
Mounting set for sensor Ø 5.2x45 mm	LYU: WZT-FA	**WZT-FA**
Adapter M10x1 mm x G 1/2 B" for sensor DS M10x1 mm / d=5.2 x 45 mm	S55563-F116	**WZT-A12**
Protection pocket G ½ B", length 35 mm, made of brass, for temperature sensor Ø 5.2x45 mm	S55563-F103	**WZT-M35**
Welding sleeve with threaded hole for temperature sensor DS M10×1 mm	S55563-F121	**WZT-G10**

Programming accessories for ultrasonic meters

Product Title	Stock no.	Product no.
UltraAssist Profi, first license, CD with USB mini-dongle	LYU:WZX-UA-PEU-MINI	**WZX-UA-PEU-MINI**
UltraAssist Profi, second license, USB mini-dongle	LYU:WZX-UA-PFU-MINI	**WZX-UA-PFU-MINI**

Ultrasonic heat/cooling energy meters
Ultrasonic heat/cooling energy meters UH50..

UH50_0.6..2.5 m3/h

Ultrasonic heat and heating/cooling energy meters

The UH50-A.. heat meter and the UH50-C.. heat/combi meter acquire the volume flow statically based on the ultrasonic measuring principle. They are available as wall-mounting versions in different sizes. The meters excel in great measuring accuracy, wear resistance, and long-term stability. The UH50.. transmits the current consumption value, the monthly values, the set day value, and error messages to the respective data collector.
The processor unit can be equipped with different sensors, different power supplies, and 2 communication modules.

The display informs the user about the amount of energy consumed.

The ultrasonic meters are used in residential or commercial buildings to acquire the amount of heat or heat/cooling energy consumed.

The standard meter is supplied without power supply and without communication (see accessories).

The meters are supplied with Operating and Mounting Instructions in the following languages: Bulgarian, Chinese, Croatian, Czech, Dutch, English, French, German, Greek, Hungarian, Italian, Norwegian, Polish, Russian, Slovakian, Slovenian, Spanish, and Turkish

Data sheet	N5324
Measurement accuracy	Heat: MID class 2 Cold: EN 1434
Standard	EN 1434
Voltage supply	Without, see accessories
Due Date	01.01
Temperature response threshold	Heat: 0.2 K Cold: 0.2 K
Measuring range, temperature	Processor unit: 0...180 °C Flow measuring section: 5...130 °C
Sensing element, temperature	Pt500
Sensor	Sensor type: DS 10x1 mm, length 27.5 mm
Communication	Without, see accessories
Mounting location	Meter: Return

Range overview UH50.. 0.6..2.5 m3/h

Nominal flow rate [m³/h]	Mounting length [mm]	PN class	Cable length, sensor [m]	Display	Con-nect. thread	Type of Meter	Stock no.	Product no.
0.6	110	PN 16		kWh	G ¾"	Heat	S55561-F112	**UH50-A05-00**
0.6	110	PN 16	1.5	kWh	G ¾"	Heat Cooling	S55561-F122	**UH50-C05-00**
0.6	110	PN 25	1.5	kWh	G ¾"	Heat Cooling	S55561-F252	**UH50-C06-00**
1.5	110	PN 16	1.5	kWh	G ¾"	Heat	S55561-F113	**UH50-A21-00**
1.5	110	PN 16	1.5	kWh	G ¾"	Heat Cooling	S55561-F123	**UH50-C21-00**
1.5	110	PN 25	1.5	kWh	G ¾"	Heat Cooling	S55561-F253	**UH50-C22-00**
1.5	190	PN 16	1.5	kWh	G 1"	Heat	S55561-F180	**UH50-A23-00**
1.5	190	PN 25	1.5	kWh	G 1"	Heat Cooling	S55561-F254	**UH50-C25-00**
2.5	130	PN 16	1.5	kWh	G 1"	Heat	S55561-F114	**UH50-A36-00**
2.5	130	PN 16	1.5	kWh	G 1"	Heat Cooling	S55561-F124	**UH50-C36-00**

Range overview UH50.. 0.6..2.5 m3/h

Nominal flow rate [m³/h]	Mounting length [mm]	PN class	Cable length, sensor [m]	Display	Con-nect. thread	Type of Meter	Stock no.	Product no.
2.5	130	PN 25	1.5	kWh	G 1"	Heat Cooling	S55561-F255	**UH50-C37-00**
2.5	190	PN 16	1.5	kWh	G 1"	Heat	S55561-F181	**UH50-A38-00**
2.5	190	PN 25	1.5	kWh	G 1"	Heat Cooling	S55561-F256	**UH50-C40-00**

Accessories see datasheet: N5324

UH50-C06-00, UH50-C22-00, UH50-C25-00, UH50-C37-00, UH50-C40-00
Design of processor unit: Split unit with ready wired control line of 1.5 m.
Connection of sensor: The sensor can be replaced; return sensor installation in measuring tube optional
Sensors: DS M10x1 mm, lenght = 27.5 mm, cable length = 1.5 m
Display: kWh

Other types:
Design of processor unit: Split unit with ready wired control line of 1.5 m.
Connection of sensor: The sensor can be replaced; the return sensor is integrated in the volume measuring section (internally, directly immersed).
Sensors: DS M10x1 mm, lenght = 27.5 mm, cable length = 1.5 m
Display: kWh

Ultrasonic heat/cooling energy meters
Ultrasonic heat/cooling energy meters UH50..

UH50_3.5..6 m3/h

Ultrasonic heat and heating/cooling energy meters 3.5...6 m3/h

The UH50-A.. heat meter and the UH50-C.. heat/combi meter acquire the volume flow statically based on the ultrasonic measuring principle. They are available as wall-mounting versions in different sizes. The meters excel in great measuring accuracy, wear resistance, and long-term stability. The UH50.. transmits the current consumption value, the monthly values, the set day value, and error messages to the respective data collector.
The processor unit can be equipped with different sensors, different power supplies, and 2 communication modules.

The display informs the user about the amount of energy consumed.

The ultrasonic meters are used in residential or commercial buildings to acquire the amount of heat or heat/cooling energy consumed.

The standard meter is supplied without power supply and without communication (see accessories).

The meters are supplied with Operating and Mounting Instructions in the following languages: Bulgarian, Chinese, Croatian, Czech, Dutch, English, French, German, Greek, Hungarian, Italian, Norwegian, Polish, Russian, Slovakian, Slovenian, Spanish, and Turkish

Data sheet	N5324
Measurement accuracy	Heat: MID class 2 Cold: EN 1434
Standard	EN 1434
Voltage supply	Without, see accessories
Due Date	01.01
Measuring range, temperature	Processor unit: 0...180 °C Flow measuring section: 5...130 °C
Temperature response threshold	Heat: 0.2 K Cold: 0.2 K
Sensing element, temperature	Pt500
Sensor	Sensor type: DS 10x1 mm, length 38 mm
Communication	Without, see accessories
Mounting location	Meter: Return

Range overview UH50.. 3.5..6 m3/h

Nominal flow rate [m³/h]	Mounting length [mm]	PN class	Cable length, sensor [m]	Display	Con-nect. thread	DN	Type of Meter	Stock no.	Product no.
3.5	260	PN 16	1.5	kWh	G 1¼"		Heat	S55561-F115	**UH50-A45-00**
3.5	260	PN 16	1.5	kWh	G 1¼"		Heat Cooling	S55561-F125	**UH50-C45-00**
3.5	260	PN 25	2.5	kWh	G 1¼"		Heat Cooling	S55561-F257	**UH50-C47-00**

Range overview UH50.. 3.5..6 m3/h

Nominal flow rate [m³/h]	Mounting length [mm]	PN class	Cable length, sensor [m]	Display	Con-nect. thread	DN	Type of Meter	Stock no.	Product no.
6	260	PN 16	1.5	kWh	G 1¼"		Heat	S55561-F116	**UH50-A50-00**
6	260	PN 16	1.5	kWh	G 1¼"		Heat Cooling	S55561-F126	**UH50-C50-00**
6	260	PN 25	1.5	kWh		25	Heat Cooling	S55561-F258	**UH50-C52-00**

Accessories see datasheet: N5324

UH50-C47-00
Design of processor unit: Split unit with ready wired control line of 1.5 m.
Connection of sensor: The sensor can be replaced; return sensor installation in measuring tube optional
Sensors: DS M10x1 mm, lenght = 38 mm, cable length = 2.5 m
Display: kWh

UH50-C52-00
Design of processor unit: Split unit with ready wired control line of 1.5 m.
Connection of sensor: The sensor can be replaced; the return sensor is not integrated in the volume measuring section.
Sensors: Ø 5.2x45 mm, cable length = 1.5 m
Display: kWh

Other types:
Design of processor unit: Split unit with ready wired control line of 1.5 m.
Connection of sensor: The sensor can be replaced; the return sensor is integrated in the volume measuring section (internally, directly immersed).
Sensors: DS M10x1 mm, lenght = 38 mm, cable length = 1.5 m
Display: kWh

Ultrasonic heat/cooling energy meters
Ultrasonic heat/cooling energy meters UH50..

UH50_10 m3/h

Ultrasonic heat and heating/cooling energy meters 10 m3/h

The UH50-A.. heat meter and the UH50-C.. heat/combi meter acquire the volume flow statically based on the ultrasonic measuring principle. They are available as wall-mounting versions in different sizes. The meters excel in great measuring accuracy, wear resistance, and long-term stability. The UH50.. transmits the current consumption value, the monthly values, the set day value, and error messages to the respective data collector.
The processor unit can be equipped with different sensors, different power supplies, and 2 communication modules.

The display informs the user about the amount of energy consumed.

The ultrasonic meters are used in residential or commercial buildings to acquire the amount of heat or heat/cooling energy consumed.

The standard meter is supplied without power supply and without communication (see accessories).

The meters are supplied with Operating and Mounting Instructions in the following languages: Bulgarian, Chinese, Croatian, Czech, Dutch, English, French, German, Greek, Hungarian, Italian, Norwegian, Polish, Russian, Slovakian, Slovenian, Spanish, and Turkish

Data sheet	N5324
Measurement accuracy	Heat: MID class 2 Cold: EN 1434
Standard	EN 1434
Voltage supply	Without, see accessories
Due Date	01.01
Measuring range, temperature	Processor unit: 0...180 °C Flow measuring section: 5...130 °C
Temperature response threshold	Heat: 0.2 K Cold: 0.2 K
Sensing element, temperature	Pt500
Sensor	Sensor type: d = 6 mm, length 100 mm
Communication	Without, see accessories
Mounting location	Meter: Return

Range overview UH50.. 10 m3/h

Nominal flow rate [m³/h]	Mounting length [mm]	PN class	Display	Con-nect. thread	DN	Type of Meter	Stock no.	Product no.
10	300	PN 25	kWh		40	Heat	S55561-F117	**UH50-A61-00**
10	300	PN 25	kWh		40	Heat Cooling	S55561-F127	**UH50-C61-00**
10	300	PN 16	kWh	G 2"		Heat Cooling	S55561-F259	**UH50-C60-00**

Accessories see datasheet: N5324

UH50-C60-00
Design of processor unit: Split unit with ready wired control line of 1.5 m.
Connection of sensor: The sensor can be replaced; the return sensor is not integrated in the volume measuring section.
Sensors: Ø 6 mm, lenght = 100 mm, cable length = 2 m
Display: kWh

UH50-A61-00, UH50-C61-00
Design of processor unit: Split unit with ready wired control line of 1.5 m.
Connection of sensor: The sensor can be replaced; the return sensor is not integrated in the volume measuring section.
Sensors: Ø 6 mm, lenght = 100 mm, cable length = 5 m
Display: kWh

Ultrasonic heat and heating/cooling energy meters 15...25 m3/h

UH50_15..25 m3/h

The UH50-A.. heat meter and the UH50-C.. heat/combi meter acquire the volume flow statically based on the ultrasonic measuring principle. They are available as wall-mounting versions in different sizes. The meters excel in great measuring accuracy, wear resistance, and long-term stability. The UH50.. transmits the current consumption value, the monthly values, the set day value, and error messages to the respective data collector.
The processor unit can be equipped with different sensors, different power supplies, and 2 communication modules.

The display informs the user about the amount of energy consumed.

The ultrasonic meters are used in residential or commercial buildings to acquire the amount of heat or heat/cooling energy consumed.

The standard meter is supplied without power supply and without communication (see accessories).

The meters are supplied with Operating and Mounting Instructions in the following languages:
Bulgarian, Chinese, Croatian, Czech, Dutch, English, French, German, Greek, Hungarian, Italian, Norwegian, Polish, Russian, Slovakian, Slovenian, Spanish, and Turkish

Data sheet	N5324
Measurement accuracy	Heat: MID class 2 Cold: EN 1434
Standard	EN 1434
Voltage supply	Without, see accessories
Due Date	01.01
Measuring range, temperature	Processor unit: 0...180 °C Flow measuring section: 5...130 °C
Temperature response threshold	Heat: 0.2 K Cold: 0.2 K
Sensing element, temperature	Pt500
Sensor	Sensor type: d = 6 mm, length 100 mm
Communication	Without, see accessories
Mounting location	Meter: Return

Range overview UH50.. 15..25 m3/h

Nominal flow rate [m³/h]	Mounting length [mm]	PN class	Cable length, sensor [m]	Display	DN	Type of Meter	Stock no.	Product no.
15	270	PN 25	5	MWh	50	Heat	S55561-F118	**UH50-A65-00**
15	270	PN 25	5	MWh	50	Heat Cooling	S55561-F128	**UH50-C65-00**
25	300	PN 25	5	MWh	65	Heat	S55561-F119	**UH50-A70-00**
25	300	PN 25	5	MWh	65	Heat Cooling	S55561-F129	**UH50-C70-00**

Accessories see datasheet: N5324

Design of processor unit: Split unit with ready wired control line of 3 m.
Connection of sensor: The sensor can be replaced; the return sensor is not integrated in the volume measuring section.
Sensors: Ø 6 mm, lenght = 100 mm, cable length = 5 m
Display: MWh

Ultrasonic heat/cooling energy meters
Ultrasonic heat/cooling energy meters UH50..

UH50_40..60 m3/h

Ultrasonic heat and heating/cooling energy meters 40...60 m3/h

The UH50-A.. heat meter and the UH50-C.. heat/combi meter acquire the volume flow statically based on the ultrasonic measuring principle. They are available as wall-mounting versions in different sizes. The meters excel in great measuring accuracy, wear resistance, and long-term stability. The UH50.. transmits the current consumption value, the monthly values, the set day value, and error messages to the respective data collector.
The processor unit can be equipped with different sensors, different power supplies, and 2 communication modules.

The display informs the user about the amount of energy consumed.

The ultrasonic meters are used in residential or commercial buildings to acquire the amount of heat or heat/cooling energy consumed.

The standard meter is supplied without power supply and without communication (see accessories).

The meters are supplied with Operating and Mounting Instructions in the following languages: Bulgarian, Chinese, Croatian, Czech, Dutch, English, French, German, Greek, Hungarian, Italian, Norwegian, Polish, Russian, Slovakian, Slovenian, Spanish, and Turkish

Data sheet	N5324
Measurement accuracy	Heat: MID class 2 Cold: EN 1434
Standard	EN 1434
Voltage supply	Without, see accessories
Due Date	01.01
Measuring range, temperature	Processor unit: 0...180 °C Flow measuring section: 5...130 °C
Temperature response threshold	Heat: 0.2 K Cold: 0.2 K
Sensing element, temperature	Pt500
Sensor	Sensor type: d=6 mm, lenght 150 mm
Communication	Without, see accessories
Mounting location	Meter: Return

Range overview UH50.. 40..60 m3/h

Nominal flow rate [m³/h]	Mounting length [mm]	PN class	Cable length, sensor [m]	Display	DN	Type of Meter	Stock no.	Product no.
40	300	PN 25	5	MWh	80	Heat	S55561-F120	**UH50-A74-00**
40	300	PN 25	5	MWh	80	Heat Cooling	S55561-F130	**UH50-C74-00**
60	360	PN 25	5	MWh	100	Heat	S55561-F121	**UH50-A83-00**
60	360	PN 25	5	MWh	100	Heat Cooling	S55561-F131	**UH50-C83-00**

Accessories see datasheet: N5324

Design of processor unit: Split unit with ready wired control line of 3 m.
Connection of sensor: The sensor can be replaced; the return sensor is not integrated in the volume measuring section.
Sensors: Ø 6 mm, lenght = 150 mm, cable length = 5 m
Display: MWh

Communication modules

Product Title	Stock no.	Product no.
Pulse module with 2 channels	S55563-F107	**WZU-P2**
M-bus module for heat and heat/cooling energy meters, generation 4	S55563-F110	**WZU-MB G4**
M-bus module with 2 pulse inputs for heat and heat/cooling energy meters, generation 4	S55563-F108	**WZU-MI**

Power packs

Product Title	Stock no.	Product no.
Power supply AC 110/230 V for UH50..	S55563-F154	**WZU-AC110/230-15**
Power supply AC 110/230 V for UH50..	LYU:WZU-AC110/230-50	**WZU-AC110/230-50**
Power pack AC/DC 24 V	S55563-F156	**WZU-ACDC24-50**
Standard battery (2x AA) for 6 years, complete with fastener	S55563-F114	**WZU-BA+GUM**
Universal battery (D-cell), life 6 and 16 years respectively	S55563-F113	**WZU-BDS**

Fittings

Product Title	Stock no.	Product no.
Installation kit G ¾", for threaded connection R ½"	S55563-F124	**WZM-E34**
Mounting kit G1", for threaded connection R ¾"	S55563-F123	**WZM-E1**
Installation kit G1 1/4 x R1"	S55563-F125	**WZM-E54**

Spacers and sealing disks

Product Title	Stock no.	Product no.
Spacer for heat meter DN25, length 260 mm, PN16, incl. 2 flat gaskets	BPZ:WZM-F260	**WZM-F260**
Spacer DN 50, length 270 mm, PN16, incl. 2 flat gaskets	LYU:WZM-F270	**WZM-F270**
Spacer DN 40, length 300 mm, PN16, incl. 2 flat gaskets	LYU:WZM-F300	**WZM-F300**
Spacer DN 65, length 300 mm, PN16, incl. 2 flat gaskets	LYU:WZM-F300.65	**WZM-F300.65**
Spacer DN 80, length 300 mm, PN16, incl. 2 flat gaskets	LYU:WZM-F300.80	**WZM-F300.80**
Spacer DN 100, length 360 mm, PN25, incl. 2 flat gaskets	LYU:WZM-F360.100-25	**WZM-F360.100-25**
Spacer G ¾", length 110 mm, incl. 2 flat gaskets	LYU:WZM-G110	**WZM-G110**
Spacer G 1", length 130 mm, incl. 2 flat gaskets	LYU:WZM-G130	**WZM-G130**
Spacer G 1", length 190 mm, incl. 2 flat gaskets	LYU:WZM-G190	**WZM-G190**
Spacer G 1¼", length 260 mm, incl. 2 flat gaskets	LYU:WZM-G260	**WZM-G260**
Spacer G 2", length 300 mm, incl. 2 gaskets	LYU:WZM-G300.1	**WZM-G300.1**
Sealing disk G 1¼", for threaded connection R 1"	LYU:9060944004	**9060944004**
Sealing disk for flange DN 40	LYU:9060944024	**9060944024**
Sealing disk for flange DN 50	LYU:9060944025	**9060944025**
Sealing disk for flange DN 65	LYU:9060944026	**9060944026**
Sealing disk for flange DN 80	LYU:9060944027	**9060944027**
Sealing disk for flange DN 100	LYU:9060944028	**9060944028**

Ball valves

Product Title	Stock no.	Product no.
Ball valve Rp ½" for sensor DS M10x1 mm, length 27.5 mm or Ø 5.2x45 mm	S55563-F104	**WZT-K12**
Ball valve Rp ¾" for sensor DS M10x1 mm, length = 27.5 mm or Ø 5.2x45 mm	S55563-F120	**WZT-K34**
Ball valve Rp 1" for sensor DS M10x1 mm, length 27.5 mm or Ø 5.2x45 mm	S55563-F119	**WZT-K1**

Accessories

Product Title	Stock no.	Product no.
Adapter M10x1 mm x G 1/2 B" for sensor DS M10x1 mm / d=5.2 x 45 mm	S55563-F116	**WZT-A12**
Protection pocket G ½ B", length 35 mm, made of brass, for temperature sensor Ø 5.2x45 mm	S55563-F103	**WZT-M35**
Protection pocket G ½ B", stainless steel, with threaded hole G ¼", L = 100 mm	S55563-F117	**WZT-S100**
Protection pocket G ½ B", stainless steel, with threaded hole G ¼", L = 150 mm	S55563-F118	**WZT-S150**

Accessories

Product Title	Stock no.	Product no.
Spacer for heat meter DN20, length 190 mm, PN16, incl. 2 flat gaskets	BPZ:WZM-F190	**WZM-F190**
Welding sleeve G ½", 45° to the pipe axis, with threaded hole G ½"	S55563-F122	**WZT-G12**
Welding sleeve with threaded hole for temperature sensor DS M10×1 mm	S55563-F121	**WZT-G10**

Programming accessories for ultrasonic meters

Product Title	Stock no.	Product no.
UltraAssist Profi, first license, CD with USB mini-dongle	LYU:WZX-UA-PEU-MINI	**WZX-UA-PEU-MINI**
UltraAssist Profi, second license, USB mini-dongle	LYU:WZX-UA-PFU-MINI	**WZX-UA-PFU-MINI**

AMR wireless system

AMR

The Automatic Meter Reading system (AMR) is an innovative system for wireless remote readout of consumption data. It consists of network nodes (data collectors) which form a network within the premises to collect all consumption data transmitted by the metering devices, to store them and to make them available for further handling. The network nodes can be read either locally or by making use of Internet technologies, also from the office. The types of consumption meters included in the AMR system are heat meters, water meters and heat cost allocators. A pulse adapter is available, enabling third-party meters to be integrated into the system.The AMR system excels in versatility, ease of installation and maintenance, and offers a large number of readout choices matched to customer needs. The system components are suited for installation in small premises (e.g. 3 apartments) and in large plant comprising several buildings. Installation of the wireless network is largely automatic, including self-configuration.
Functioning principle:The system automatically configures itself during installation, forming a network. The battery-powered network nodes receive and store the consumption data from the metering devices installed within their range. In the network, the measured values received from all metering devices are constantly updated. This means that every network node holds the consumption data of the entire plant so that readout can take place at any of the nodes. For local readout, a laptop can be connected to any of the network nodes via cable, or an optional wireless module can be used. This works within the range of each network node. Depending on the local situation, it may not even be necessary to enter the house for making the readout. If AMR plant shall be read out from a remote location, one of the network nodes is to be used with a gateway. This gateway then offers a number of communication choices: Data can be transmitted directly to the billing systems via GSM network, broadband cable network or computer network. The user can choose the transmission medium he prefers.

Data sheet	N2870

Stock no.	Product no.
JXF:AMR	**AMR**

Radio module with integrated antenna for WFx5.. meters, C-mode

WFZ662C

The walk-by add-on module acquires and handles the consumption data and service information delivered by the WFx5.. heat and heat/cooling meters and passes it on parallelly to the walk-by and AMR system.

Data sheet	N5323
Warranty	24 Months

Stock no.	Product no.
S55563-F165	**WFZ662C**

Add-on radio module WFZ661 for water meters WF.30.. / WM.10..

WFZ661

Radio adapter for mechanical modularis water meters (WFx30, WMx10). Adapter acquires and processes the metering pulses of the radio-ready mechanical water meters WFx30../WMx10.. and transmits AMR and walk-by telegrams in a parallel way.

Data sheet	A6V10986918
Warranty	24 Months

Stock no.	Product no.
S55563-F147	**WFZ661**

Tools for network nodes

Product Title	Stock no.	Product no.
USB programming adapter	JXF:RNNPH0010020	**RNNPH0010020**
M-bus adapter plug for WFZ.MBM-USB	JXF:RNNPH0020010	**RNNPH0020010**

New Product

Batteries for network nodes and gateways

Product Title	Stock no.	Product no.
Battery for WTT..	JXF:WTZ.BAT	**WTZ.BAT**
Backup battery for WT.16..	JXF:FBCRAA/KS	**FBCRAA/KS**

WFZ662

Radio module with integrated antenna for WFx5.. meters, S-mode

The walk-by add-on module acquires and handles the consumption data and service information delivered by the WFx5.. heat and heat/cooling meters and passes it on parallelly to the walk-by and AMR system.

Data sheet	N5323
Warranty	24 Months

	Stock no.	Product no.
	S55563-F153	**WFZ662**

Tools

Product Title	Stock no.	Product no.
ACT60 – Readout and parameterization app for WTT726-FE7300	JXF:ACT60	**ACT60**
Mobile tool for ACT60 WTT726-FE7300	S55563-F161	**WTT726-FE7300**
Infrared read head (with USB interface)	JXF:WFZ.IRDA-USB	**WFZ.IRDA-USB**
Triggering tool for radio telegrams	JXF:WFZ.PS	**WFZ.PS**
Torque Screwdriver, Torx Plus™	JXF:FZ201-009	**FZ201-009**

Software

Product Title	Stock no.	Product no.
ACT50 – Readout and parameterization software	JXF:ACT50	**ACT50**
ACT60 – Readout and parameterization app for WTT726-FE7300	JXF:ACT60	**ACT60**
ACT21 - Parameterization software	JXF:ACT21	**ACT21**
ACS26 – AMR remote readout software	JXF:ACS26	**ACS26**
ACT26 – Commissioning and service software	JXF:ACT26	**ACT26**

Walk-by radio system

walk-by

Simple, fast and reliable. These three attributes are the most apt descriptions of the walk-by system. After all, it provides values for billing consumption easily, quickly and dependably. And the meter-reader does not even have to enter the tenant's flat - on the reading date, he only has to enter the commonly accessible area of the property.
For smaller properties, he can even collect data outside of the building. That not only benefits the meter-reader (who does not have to plan and mount data collectors any more), but also tenants. They no longer have to agree on a date for reading or even be there on the readout day. It couldn't be simpler. At the set reading time, the meters send current
consumption data at short intervals. The meter-reader only has to enter the building or even just walk around it with his mobile meter-reading system. This consists of a mobile data collector
and a laptop with application software. The data collector collects the radio telegrams and, after a plausibility check, sends them wirelessly to the laptop via the Bluetooth interface. The software on the laptop not only manages the data, it also shows the meter-reader the current progress of the process. After having received all data, the meter-reader can then leave the property. Back at his workplace, the meter-reader only has to export the data saved and read them for example into a billing program. If data is needed on a regular basis – meaning permanently mounted data collectors are to be retrofitted with an interface for remote data transmission – the measuring devices can be reprogrammed from the walk-by system to the stationary AMR system from Siemens at any time. This means that readout values can be called up on a daily basis without entering the property.

Within the walk-by system there are walk-by heat cost allocators and walk-by radio adpaters available. More devices on request.

Warranty	60 Months

Stock no.	Product no.
JXF:walk-by	**walk-by**

Radio module with integrated antenna for WFx5.. meters, C-mode

WFZ662C

The walk-by add-on module acquires and handles the consumption data and service information delivered by the WFx5.. heat and heat/cooling meters and passes it on parallelly to the walk-by and AMR system.

Data sheet	N5323
Warranty	24 Months

Stock no.	Product no.
S55563-F165	**WFZ662C**

Add-on radio module WFZ661 for water meters WF.30.. / WM.10..

WFZ661

Radio adapter for mechanical modularis water meters (WFx30, WMx10). Adapter acquires and processes the metering pulses of the radio-ready mechanical water meters WFx30../WMx10.. and transmits AMR and walk-by telegrams in a parallel way.

Data sheet	A6V10986918
Warranty	24 Months

Stock no.	Product no.
S55563-F147	**WFZ661**

WFZ662

Radio module with integrated antenna for WFx5.. meters, S-mode

The walk-by add-on module acquires and handles the consumption data and service information delivered by the WFx5.. heat and heat/cooling meters and passes it on parallelly to the walk-by and AMR system.

Data sheet	N5323
Warranty	24 Months

Stock no.	Product no.
S55563-F153	**WFZ662**

Tools and software

Product Title	Stock no.	Product no.
ACT50 – Readout and parameterization software	JXF:ACT50	**ACT50**
ACT60 – Readout and parameterization app for WTT726-FE7300	JXF:ACT60	**ACT60**
Walk-by readout software	LYU:ACT46	**ACT46**
Infrared read head (with USB interface)	JXF:WFZ.IRDA-USB	**WFZ.IRDA-USB**
Triggering tool for radio telegrams	JXF:WFZ.PS	**WFZ.PS**
Torque Screwdriver, Torx Plus™	JXF:FZ201-009	**FZ201-009**

M-Bus metering system

M-Bus

The M-Bus Metering System is a proven system used for the remote readout of consumption data. It conforms to EN 1434/3. The system contains all components required for reading M-bus-compatible consumption meters via an easy-to-install, interference-proof 2-wire bus. The consumption meters available within the M-Bus Metering System are heat meters and water meters. A pulse adapter enables third-party meters to be integrated into the system. M-bus-compatible meters of other manufacture can also be read out after appropriate testing. The M-Bus Metering System exels in immunity, ease of installation and maintenance plus sow a large number of readout choices matched to customer needs. The system components are suited for installation in small premises (e.g. 3 apartments) and in large plant comprising several buildings.

Data sheet	N5361
Warranty	60 Months

Stock no.	Product no.
BPZ:M-Bus	**M-Bus**

M-bus web server

WTV676-HB6035

The M-bus web server reads devices connected directly to the web server, devices connected to the web server via level converters as well as devices connected to the web server via RF converters.
Web server can be used:
- Alone with up to 20 directly connected, wired M-bus devices
- As master on a M-bus network with up to six parallel connected level converters per line. Per line up to 250 M-bus devices (max. 250 M-bus meters, max. 250 RVD converters) can be connected.
- As a master on an M-bus wireless network with up to 23 RF converters, each with up to 500 wireless devices

The web server can read out up to 2,500 wireless devices and up to 500 wired devices. It records the data from the connected M-bus devices, can evaluate the data, and sends email notifications on events and alarms.
A PC/Internet browser reads the data and log files either locally over Ethernet or from anywhere over the Internet. In addition, the report files can be periodically transmitted with device data to an email recipient or to an FTP server.

An email can be sent on events and alarms.
The web server can be integrated in the Synco IC-Cloud. This permits the periodic upload of invoicing and trend data as well as alarm messages to the cloud per customized settings as well as distributing the information to the corresponding customers via email.

Data sheet	A6V11157961
Operating voltage	AC/DC 24 V +/- 10 %
Frequency	50/60 Hz
Power consumption	Max. 15 VA
Ambient humidity, operation	5...95 % r. F.
Mounting	DIN rail
Degree of protection	IP20
Weight (net)	2.44 kg
Warranty	24 Months

Stock no.	Product no.
S55563-F150	**WTV676-HB6035**

WTX631-GA0090

M-bus Level Converter/Repeater 250

The level converter/repeater WTX631-GA0090 is the interface between M-bus device and a read system. It consists of a level converter and the associated power supply.

- The level converter and associated power supply form a unit: No addition transformer or auxiliary power required
- Connect up to 250 M-bus devices (max. 250 simply M-bus loads)
- Can be used with the M-bus web server WTV676.., PXC devices, other M-bus read / configuration systems
- Up to 6 level converters connected in parallel on one M-bus network
- Local data reading of M-bus devices via RS-232 or RS-485 interface
- Remote reading of M-bus devices via M-bus web server WTV676.. (Cloud)

Data sheet	A6V11742346
Operating voltage	Power supply: AC 110...240 V Level converter: DC 24 V
Frequency	50/60 Hz
Power consumption	6 W + 0.07 W for each connected M-bus device
Ambient temperature, operation	-20...55 °C
Mounting	DIN rail
Degree of protection	IP20
Weight (net)	0.392 kg
Dimensions (W x H x D)	71 x 110 x 62 mm
Warranty	24 Months

Stock no.	Product no.
S55563-F159	**WTX631-GA0090**

WTV531-GA5060

Level converter

The level converter WTV531-GA6050 is an interface for use between M-bus meters and reading systems. The meter data can be read on site via PC software ACT531 or via internet using the optional web server. The level converter can read up to 60 M-bus devices (60 M-bus loads).
It is used:

- As a master on an M-bus network with up to 60 meters. It can read data on site from the level converter with the help of PC software ACT531
- As a slave to extend the M-bus network to up to 6 level converters (1 master and 5 slaves) with up to 60 devices each. It can read out a maximum of 360 M-bus loads and a maximum of 1,000 logical meters. Data are read locally via the master level converter
- As a slave on the optional M-bus web server to read data from remote locations

Data sheet	A6V10844290
Operating voltage	AC 24 V;DC 24 V
Frequency	50/60 Hz
Power consumption	12 VA
Weight (net)	0.166 kg
Dimensions (W x H x D)	71 x 110 x 62 mm
Warranty	24 Months

Stock no.	Product no.
S55563-F145	**WTV531-GA5060**

Software and Tools

Product Title	Stock no.	Product no.
ACT50 – Readout and parameterization software	JXF:ACT50	**ACT50**
Readout software for WTV531-GA5060 level converter	JXF:ACT531	**ACT531**
Infrared read head (with USB interface)	JXF:WFZ.IRDA-USB	**WFZ.IRDA-USB**
USB programming adapter	JXF:RNNPH0010020	**RNNPH0010020**
M-bus adapter plug for WFZ.MBM-USB	JXF:RNNPH0020010	**RNNPH0020010**

M-bus add-on module for water meters WF.30.. / WM.10..

WFZ311

The M-bus add-on module is used to integrate a mechanical water meter WFx30.. / WMx10..in an M-bus system. It can be retrofitted at any time.

Data sheet	A6V11991477
Warranty	24 Months

Stock no.	Product no.
S55563-F158	**WFZ311**

M-bus add-on module for WFx5.. meters

WFZ51

The add-on module acquires and processes the consumption data and service information from the WFx5.. heat and heat/cooling energy meter. It is periodically read out by an M-bus master.

Data sheet	N5323
Warranty	24 Months

Stock no.	Product no.
S55563-F131	**WFZ51**

M-bus pulse adapter

AEW310.2

Module for acquiring and storing the pulses received from consumption meters with pulse output. It can handle pulses from heat, gas, hot water, chilled water, electricity or hours run meters.

Data sheet	N5383
Operating voltage	DC 3 V
Dimensions (W x H x D)	95 x 79 x 27 mm
Warranty	24 Months

Stock no.	Product no.
S55563-F130	**AEW310.2**

Synergyr control and metering system
Mounting kit for WRV81/84 replacement

ALG80WRI

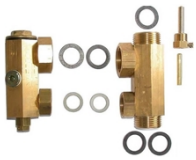

Mounting kit for WRV81/84 replacement

Using the ALG80WRI, heat meter and small valve (complete with actuator) can be installed in very confined spaces, analogous to the WRV mounting dimensions.
The ALG80WRI consists of 2 hydraulic diversion pieces with fittings, a built-in immersion sleeve and the necessary sealings.

Data sheet	N2803
Warranty	24 Months

Stock no.	Product no.
BPZ:ALG80WRI	**ALG80WRI**

ALG83WRI

Mounting kit for WRV83 replacement

Using the ALG83WRI, a WRV83 valve can be hydraulically replaced by a heat meter without having to modify the existing piping.
The ALG83WRI consists of 2 threaded adapters (from ¾" to 1"), an immersion sleeve and the necessary sealings.

Data sheet	N2803
Warranty	24 Months

Stock no.	Product no.
BPZ:ALG83WRI	**ALG83WRI**

ALG10/20

Mounting kit

Mounting kit for zone valve VVP47.10...; to be applied when replacing a valve WRV8... by an interface WRI80.

Data sheet	N2803
Warranty	24 Months

Stock no.	Product no.
BPZ:ALG10/20	**ALG10/20**

Mounting kit for WRV83 replacement

ALG83WRI

Using the ALG83WRI, a WRV83 valve can be hydraulically replaced by a heat meter without having to modify the existing piping.
The ALG83WRI consists of 2 threaded adapters (from ¾" to 1"), an immersion sleeve and the necessary sealings.

Data sheet	N2803
Warranty	24 Months

Stock no.	Product no.
BPZ:ALG83WRI	**ALG83WRI**

Published by
Siemens Switzerland Ltd

Smart Infrastructure
Global Headquarters
Theilerstrasse 1a
6300 Zug
Switzerland
Tel. +41 58 724 24 24

For the U.S. published by
Siemens Industry Inc.

800 North Point Parkway
Suite 450
Alpharetta, GA 30005
United States

Smart Infrastructure combines the real and digital worlds across energy systems, buildings and industries, enhancing the way people live and work and significantly improving efficiency and sustainability.

We work together with customers and partners to create an ecosystem that both intuitively responds to the needs of people and helps customers achieve their business goals.

It helps our customers to thrive, communities to progress and supports sustainable development to protect our planet for the next generation.

siemens.com/smart-infrastructure

Subject to changes and errors. The information given in this document only contains general descriptions and/or performance features which may not always specifically reflect those described, or which may undergo modification in the course of further development of the products. The requested performance features are binding only when they are expressly agreed upon in the concluded contract.

© Siemens 2023

Solution Partner

Building Technologies

SIEMENS

Find a matching partner:
siemens.com/bt/partner-finder