© Siemens AG 2014

7/2 Introduction

7/3 Telecontrol

7/4 TeleControl Basic
7/6 TeleControl Basic for the control center
7/6 Telecontrol Server Basic
7/11 TeleControl Basic for the stations
7/11 CP 1242-7 GPRS module
7/16 CP 1243-1
7/20 MD720 MODEM

7/25 TeleControl Professional
7/31 TeleControl Professional for the control center
7/33 SINAUT engineering software
7/36 SINAUT ST7cc, Add-on for WinCC
7/39 WinCC/TeleControl
7/43 PCS 7 TeleControl
7/48 PCS 7 TeleControl Engineering Station
7/50 PCS 7 TeleControl Operator System
7/52 SINAUT ST7sc SCADA Connect Software
7/55 TeleControl Professional for the stations
7/58 Stations for ST7 protocol
7/60 TIM 3V-IE for WAN and Ethernet
7/67 TIM 3V-IE Advanced
7/74 TIM 4R-IE for WAN and Ethernet
7/82 Stations for DNP3 protocol
7/84 CP 1243-1 DNP3
7/88 TIM 3V-IE DNP3
7/93 TIM 4R-IE DNP3
7/100 Stations for IEC protocol
7/102 CP 1243-1 IEC
TeleControl Professional for the network
7/118 IP-based modems and routers
7/144 Modems for the conventional telephone network
Ch. 8 Industrial Security components
Ch. 2 Industrial Ethernet network components

7/106 Teleservice
7/107 SIMATIC Teleservice
7/107 TeleService
7/115 IPC Remote Manager
7/115 SIMATIC IPC Remote Manager

7/117 Remote Networks
7/118 IP-based modems and routers
7/118 SCALANCE M874 mobile wireless router
7/127 SCALANCE M875 mobile wireless router
7/134 SCALANCE M812-1 and SCALANCE M816-1 ADSL routers
7/140 SCALANCE M826-2 SHDSL router
7/144 Modems for the conventional telephone network
7/146 MD2 dedicated line modem
7/150 MD3 telephone modem
7/20 MD720 modem

7/153 Accessories for remote networks
7/153 LTOP overvoltage protection
7/156 ANT794-4MR 2G / 3G / 4G antenna
7/158 ANT794-3M GSM/GPRS antenna
7/160 PPI modem cable
7/161 Connecting cables

Промэлектроника, sales@prom-elec.com

© Siemens AG 2014

Overview

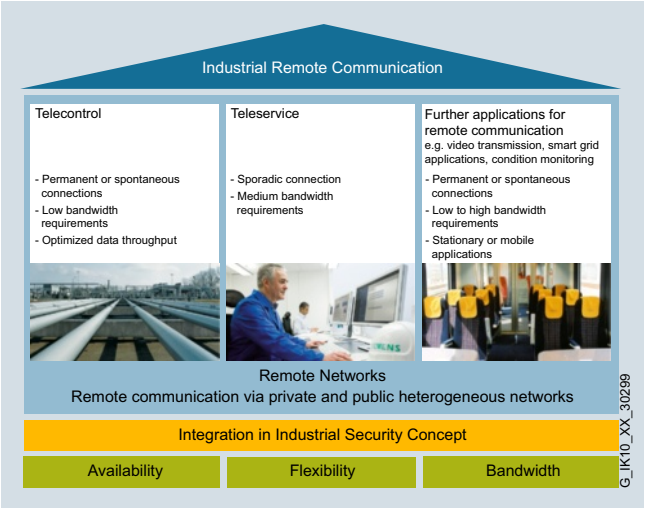

Industrial Remote Communication offers efficient remote access to machines and plants with SIMATIC. Global remote access to far-flung plants, remote machines and mobile applications is gaining in significance – both in industry and in industry-related areas. With a comprehensive range of solutions for industrial remote access, Siemens offers the ideal basis for efficient and reliable monitoring and control of widely distributed plants and processes of any size, thereby addressing the growing importance of the networking of industrial, process engineering and production engineering plant sections.

In addition to efficient remote access (Remote Access), Industrial Remote Communication also offers with the network components the option of transparent data links to remote networks via public or private wide area networks (WAN).

In this way, for example, a video transmission in real time via mobile radio from the passenger compartment of trains serves to increase passenger safety (video surveillance). In addition, applications such as data interfacing for ticket machines, infotainment services and Internet on board, or proactive monitoring of vehicle engineering (telemetry) are also possible.

Secure and flexible access worldwide

Industrial plants are often distributed over large areas – sometimes even across national borders. Siemens offers proven solutions for industrial remote access, such as flexible telecontrol systems and efficient remote maintenance. Whether in public infrastructure or in the manufacturing or process industries: With the components for Industrial Remote Access, Siemens offers comprehensive solutions for telecontrol and teleservice.

This includes, for example, the monitoring of all interfaces between the control center and the distributed machines and systems or the remote maintenance accesses via the Internet, including firewalls. Data transmission is encrypted by means of a VPN and is thus protected from data espionage and manipulation. Communication stations are securely authenticated. Using the components for remote networks, remote access can be set up securely and reliably.

Telecontrol

Telecontrol involves the connection of distant process stations to one or more central control systems. Various different public or private networks can be used for communication for the purposes of monitoring and control. Event-driven or cyclic exchange of process data is performed with special telecontrol protocols and enables the operating personnel to manage the overall process effectively.

The telecontrol systems are based on SIMATIC. They supplement the SIMATIC system with corresponding hardware and software, and thus permit individual components to be networked over a wide area network (WAN). The data for this is transmitted via conventional WANs, e.g. dedicated cables, telephone network, wireless, but also via IP-based networks such as mobile networks or the Internet.

Teleservice

Teleservice is data exchange with physically remote technical plants (machines, plants, computers, etc.) for the purpose of error detection, diagnostics, maintenance, repair, or optimization.

Remote diagnostics and remote maintenance of production plants are indispensable in modern automation technology. They are more efficient and more cost-effective than an on-site service employee. This allows faults to be detected and cleared much faster, downtimes of machines are reduced and their availability is increased.

Siemens Remote Services

The service concept of "Siemens Remote Services" provides a powerful, secure platform for remote access to machines and plants. The inclusion of "shared experts" ensures effective support, not only from Siemens but also from the company's own specialists.

Remote networks

Any type of remote communication is based on the public and private networks used for this purpose (e.g. mobile radio or fixed network), referred to as "remote networks".

Under the name SCALANCE M, Siemens offers a comprehensive range of high-performance transmission components, routers and modems that are tailored to the specific properties of the respective remote networks or their transmission media and therefore combine the maximum possible security with reliability.

Regardless of whether spontaneous or permanent transmission, whether high or moderate bandwidth, whether mobile or stationary – with the SCALANCE M products for IP-based connectivity, users have a comprehensive spectrum of components at their disposal for remote access – flexible, optimized for industrial use and integrated into the TIA environment and into the Industrial Security concept.

SCALANCE M devices can be used universally in the fields of telecontrol, teleservice (remote diagnosis and maintenance), and any other application for industrial remote communication.

© Siemens AG 2014

Overview

Industrial plants or plants in public infrastructure areas are often spread across wide areas, sometimes even across national borders. The range of telecontrol products offers complete solutions with the following features:

- Connection of distributed process stations to one or more control centers
- Use of different public or private communication networks for monitoring and controlling the telecontrol substations
- Event-driven or cyclic exchange of the process data including time stamp via special telecontrol protocols
- Effective control of the overall process by the operating personnel
- Online access to the substations for diagnostics, remote programming and maintenance

TeleControl Basic

TeleControl Basic is a simple remote control and remote maintenance system optimized for the use of public communication networks such as mobile radio and internet for connection to the substations.

It comprises the TeleControl Server Basic control center software and substations of the type SIMATIC S7-1200 or S7-200. In addition to communication between the control center and the substations, the system also enables internode communication between the substations.

Small-scale applications with few outstations can be implemented, as well as large-scale plants comprising up to 5 000 outstations.

TeleControl Professional

TeleControl Professional includes telecontrol systems for extensive, expanded applications of the process industry. From SIMATIC PCS 7, SIMATIC WinCC or non-Siemens control systems using OPC, outstations based on SIMATIC S7-1200, S7-300 and S7-400 can be monitored and controlled. The outstations and substations can communicate with each other as well as with one or more control centers. TeleControl Professional has a modular design throughout and can be used with extreme flexibility.

Both telecontrol systems can be connected to a non-Siemens control center system (OPC client) via OPC.

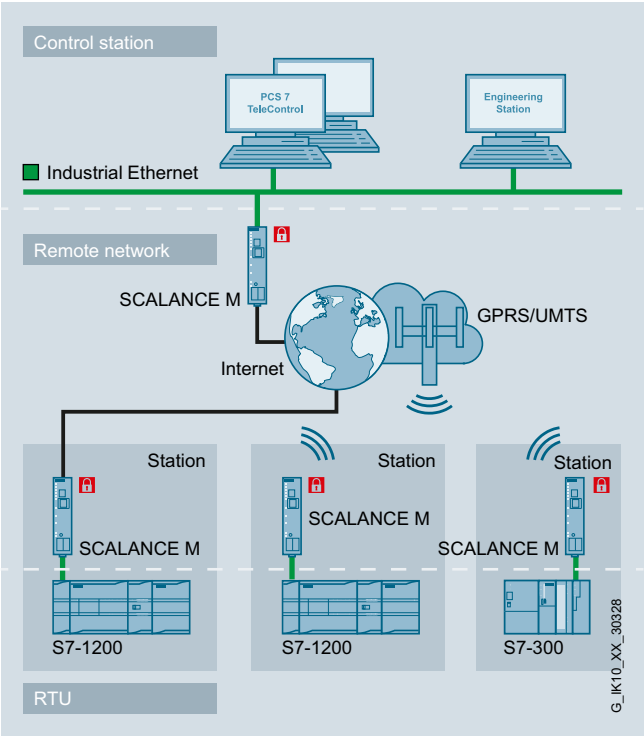

Setup of a telecontrol application based on an example configuration

Benefits

- Secure and economic remote monitoring and control of process stations
- Global remote access to widely distributed machines and plants
- Quick and easy commissioning due to perfectly matched system components

More information

You can find more information on the Internet at:
http://www.siemens.com/telecontrol

© Siemens AG 2014

Overview

TeleControl Basic is based on SIMATIC S7-1200/S7-200 and is the low-cost solution for monitoring and controlling simple telecontrol stations.

With TeleControl Basic, up to 5 000 substations can easily and securely communicate with one another and with the control center using GPRS (**G**eneral **P**acket **R**adio **S**ervice) mobile radio or the internet. They typically remain permanently online.

Benefits

get Designed for Industry

- Saving of costs for design and maintenance of own radio system through use of existing mobile radio networks or the internet
- Cost-effective connection of outstations via Ethernet / Internet
- Low-cost GPRS volume tariffs reduce the monthly connection charges
- A GPRS connection is permanently online, i.e. it offers the advantages of a dedicated line
- Secure connection over public networks thanks to encrypted data transfer
- Support for bidirectional connections
  - Between station and control center
  - Between station and station
- Remote maintenance and remote programming of the substations during process operation

Application

TeleControl Basic is based on SIMATIC S7-1200/S7-200 and secure transmission via mobile radio or the internet. It is particularly suitable wherever small data quantities have to be transmitted over wireless connections or via the Internet.

TeleControl Basic can be used as a low-cost fault signaling system, but thanks to the bidirectional communications facility, it is also suitable for simple telecontrol tasks for monitoring and control.

Depending on the performance power of the CPU in the substations, local automation tasks can be handled in addition to communication.

Main applications are the monitoring and control of non-mobile stations in the following sectors:

- Water and wastewater
- Drinking water purification and distribution
- Irrigation systems
- Oil and gas supplies
- District heating networks
- Automatic machines
- Traffic control systems
- Building monitoring
- Weather stations
- Lighthouses and buoys
- Wind farms
- Photovoltaic plants
- Environmental monitoring equipment
- Intelligent advertising panels

In addition, TeleControl Basic can also be used to link mobile stations if central monitoring and/or control is required for these:

- Railway vehicles
- Special vehicles
- Local public transport
- Complex building machines
- Ships on rivers and in coastal areas

Design

TeleControl Basic consists of the following components:

- **CP 1242-7 GPRS communication module;**
  communications processor for GPRS and GSM communication for setting up substations of the type S7-1200
- **CP 1243-1 communications module;**
  communications processor for setting up substations of the type S7-1200 for connection to the Internet by means of external routers e.g. SCALANCE M812-1.
- **MODEM MD720**;
  modem for GPRS and GSM communication for setting up SIMATIC S7 substations e.g. S7-200
- **Telecontrol Server Basic**
  software package consisting of:
  - OPC server software for the PC control center;
    for data exchange with an OPC client, e.g. WinCC, PCS 7 or WinCC flexible
  - Connection manager for the PC control center;
    for establishing a secure GPRS connection with CP 1242-7/ MODEM MD720 or via Ethernet/Internet, for monitoring these connections, and for data routing with internode communication between substations of the same type (S7-1200 or S7-200)

The CP is plugged straight into the S7-1200, and is connected to the CPU via the backplane bus. The substation is programmed and configured with STEP 7 Basic/Professional V12 (TIA Portal) or higher.

The MODEM MD720 has an RS232 interface and is connected to the S7-200 controller using the Siemens PPI adapter.

© Siemens AG 2014

Function

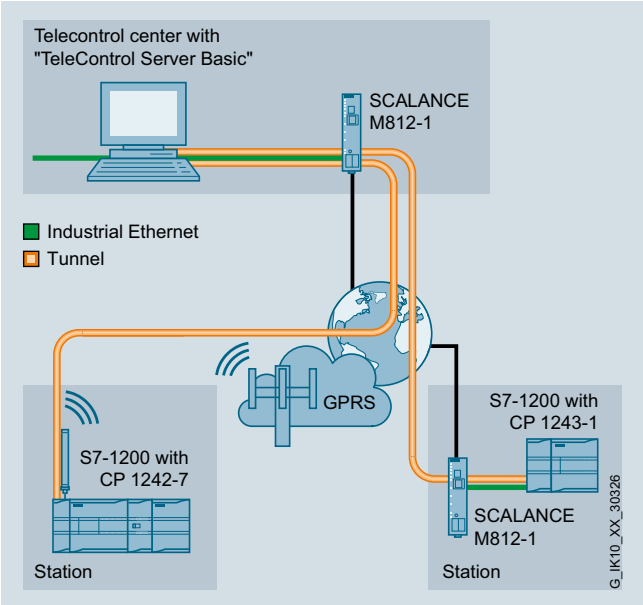

Communication options with TeleControl Basic

Process data communication

The TeleControl Server Basic software enables the connection of up to 5 000 telecontrol stations to the control center via the OPC interface using GPRS mobile radio or Ethernet/Internet.

TeleControl Server Basic is an OPC server software with special communications functions, which permit it to support connections to remote telecontrol substations. These controls are equipped with the CP 1242-7, CP 1243-1, or the MODEM MD720. The GPRS service (**G**eneral **P**acket **R**adio **S**ervice) of a GSM network (**G**lobal **S**ystem for **M**obile Communication = mobile radio network) or standard IP services via Ethernet are used for the connections.

Via these GPRS connections or Ethernet/Internet, the remote telecontrol substations can communicate with the TeleControl Server Basic software or with other S7 controllers connected with TeleControl Server Basic.

The PC on which TeleControl Server Basic is installed must be permanently accessible from the GPRS network. It must therefore be directly connected to the GPRS provider using a dedicated line, and permanently to the Internet, e.g. by means of DSL.

The TeleControl Basic software package includes a block library for the SIMATIC S7-200 controller. With the help of these blocks, users can implement data exchange with S7-200 substations.

For substations of type S7-1200, the blocks for the CP 1242-7 are included directly in STEP 7 Basic/Professional V11 (TIA Portal) or higher.

Alarm output per text message

The CP 1242-7 can receive and send text messages. A mobile phone or S7-1200 can be the communication partner.

Wake-up function

"Wake-up" of stations that change from standby mode to online mode for diagnostics purposes. The CP is woken up by its communication partner (e.g. TeleControl Server Basic) by means of a wake-up call or a wake-up text message to establish the connection between them.

For security reasons, the communication partner must identify itself appropriately for the wake-up function, e.g. using the CLIP function.

Access to the substations using Teleservice

TeleControl Server Basic contains the teleservice function directly in STEP 7 Basic V13.0 for S7-1200 CP. This gives internationally active plant and machine manufacturers worldwide access to the S7-1200 stations.

Up to three telephone numbers can be saved on MODEM MD720, from which a teleservice connection is permissible. If a call is made from one of the approved numbers, the MODEM MD720 interrupts the GPRS connection and switches through the teleservice connection to the PLC. The GPRS connection is reestablished at the end of the teleservice session.

© Siemens AG 2014

Overview

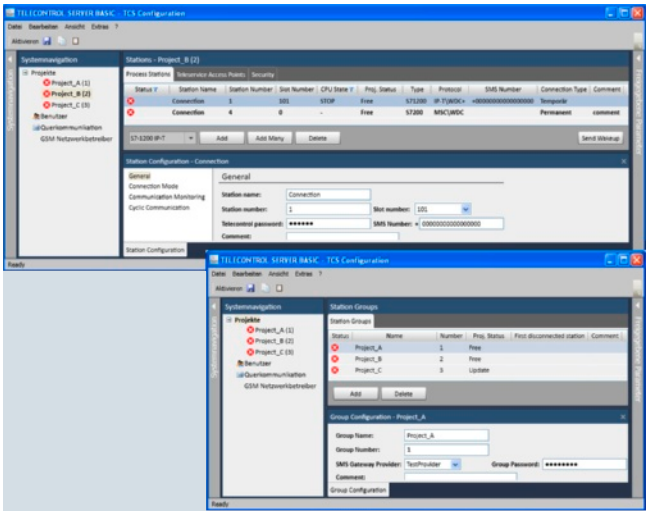

- Software package for the PC, comprising:
  - OPC (UA) server and connection manager for telecontrol and teleservice tasks (diagnostics with STEP 7 for the S7-1200)
  - OPC (UA) configuring software for the S7-1200 and S7-200
  - PLC block library for the S7-200
- Operation in mobile radio network / via Ethernet
  - SIMATIC S7-1200 with CP 1242-7 via dynamic IP addresses with a standard mobile phone flat-rate contract in the 2G cellular network (GPRS mode)
  - SIMATIC S7-1200 with CP 1242-7 via fixed IP addresses in the 2G mobile cellular network (GPRS network)
  - SIMATIC S7-200 with SINAUT MD720 modem via dynamic IP addresses with a standard mobile phone flat-rate contract in the 2G cellular network (GPRS mode)
  - SIMATIC S7-1200 with CP 1243-1 via connection to Ethernet and by means of external DSL routers, e.g. SCALANCE M812-1
- Connection of up to 5 000 telecontrol stations to the control center via the OPC (UA) interface
- Operation and diagnostics of S7-1200 and S7-200 stations on an OPC (UA) server with different STEP 7 projects and separate users with user administration
- Integral teleservice gateway for diagnostics of S7-1200 stations with STEP 7 via the Internet, also with dynamic IP addresses. This works on every PC with STEP 7 and standard internet access without parameterizing firewalls or routers.
- Communication between S7-1200 or S7-200 stations by means of routing function (in the case of GPRS also when using dynamic IP addresses)
- Encrypted transmission for protection against data manipulation and tapping
- Import of SINAUT MICRO SC projects

Benefits

get Designed for Industry

- Setup of low-cost alarm signaling systems, monitoring systems, and telecontrol systems with SIMATIC S7-1200, S7-200 and HMI software with OPC (UA) interface (e.g. with WinCC)
- Low-cost connection of widely distributed plants by operating SIMATIC S7 via public APNs (mobile wireless Internet gateway) with standard mobile phone flat-rate contracts, independently of individual mobile wireless operators
- Alternatively, GPRS mode of the SIMATIC S7 via private APNs of the mobile wireless operators for maximum security
- Optimized communication modes for GPRS save on data volumes and thus costs:
  - with permanent connection by means of optimized communication with effective frame format
  - Support for GPRS connections that are built up as required
- Redundancy mode of the TeleControl Server Basic for improving data security
- Low-cost connection of widely distributed SIMATIC S7-1200 systems through connection to Ethernet / Internet by means of external routers
- The multi-user capability and multi-project capability of the OPC (UA) server allow it to be used by system integrators who can allow their customers to use their own server for telecontrol applications. This achieves savings for customers (power costs, server maintenance).
- Teleservice:
  TeleControl Server Basic provides internationally active plant and mechanical equipment manufacturers with global access to the S7-1200 via STEP 7 using the CP 1242-7 / CP 1243-1. Only GPRS/Internet access to the S7 controller and a PC with STEP 7 and Internet access are required.
- The central control station can be located anywhere thanks to use of the Internet
- Protection of investment thanks to migration of existing projects with SINAUT MICRO SC into TeleControl Server Basic
- Greater protection against tapping and manipulation of data transmitted between the S7-1200/S7-200 station and the OPC (UA) server of the TeleControl Server by means of improved encryption algorithms in the TeleControl Server Version 3
- Fast detection of faults thanks to clearly structured connection and station monitoring of all connected S7-1200 and S7-200 stations
- Fast creation of projects thanks to off-the-shelf sample applications

© Siemens AG 2014

Application

- Establishment of small to extremely extensive systems for monitoring and control with simple telecontrol stations
- Energy-saving concepts, e.g. through status-dependent speed control of pumps in remote stations
- Monitoring and control of non-mobile stations in the following sectors:
  - Sewage plants
  - Drinking water purification and distribution
  - Irrigation systems
  - Oil and gas supplies
  - District heating networks
  - Automatic machines
  - Traffic control systems
  - Building monitoring
  - Weather stations
  - Lighthouses and buoys
  - Wind farms
  - Photovoltaic plants
  - Environmental monitoring equipment
  - Intelligent advertising panels
- Connection of mobile stations if central monitoring and/or control is required for these, in the following areas:
  - Railway vehicles
  - Control of special vehicles
  - Local public transport
  - Complex building machines
- Ships on rivers and in coastal areas
- Recording of environmental data
- Remote diagnosing of the SIMATIC S7-1200 with STEP 7 via the mobile wireless network and the Internet

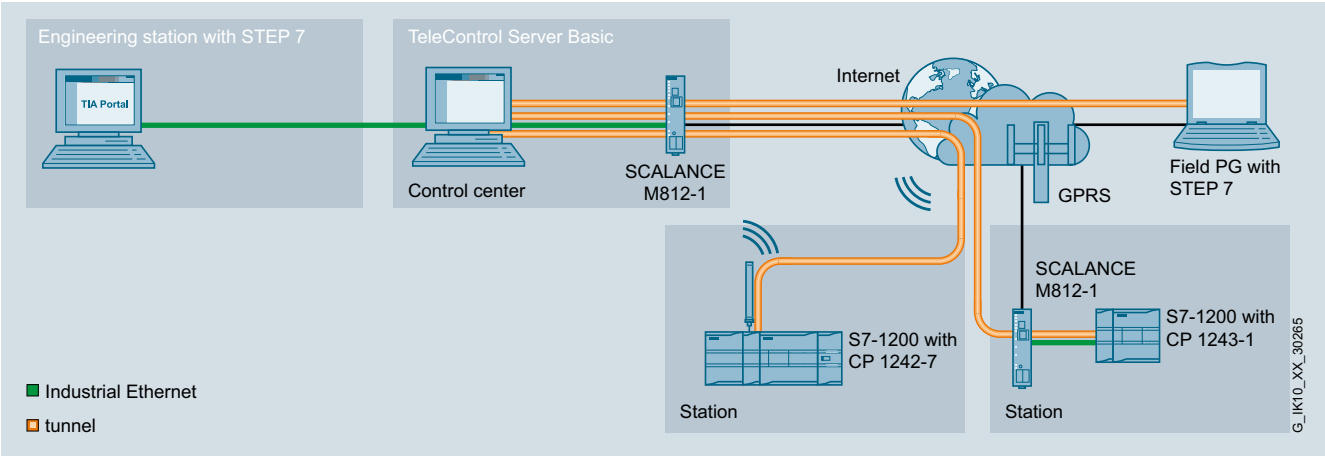

TeleControl Server Basic: Diagnosing an S7-1200 with dynamic or fixed IP address via the Internet and mobile wireless network

Design

The TeleControl Server Basic software package consists of:

- Block library for the SIMATIC S7-200 CPU
- OPC (UA) server software for the PC control center; for data exchange with an OPC (UA) client, e.g. WinCC
- Connection manager software for the PC control center
  - for establishing a secure connection between an S7 station plus a CP 1242-7 (GPRS mode), CP 1243-1 (Ethernet) or an MD720 (GPRS mode) modem, and the OPC (UA) server
  - for monitoring these connections
  - for data routing in the case of slave-to-slave communication between SIMATIC S7-1200 and S7-1200, and S7-200 and S7-200

© Siemens AG 2014

Function

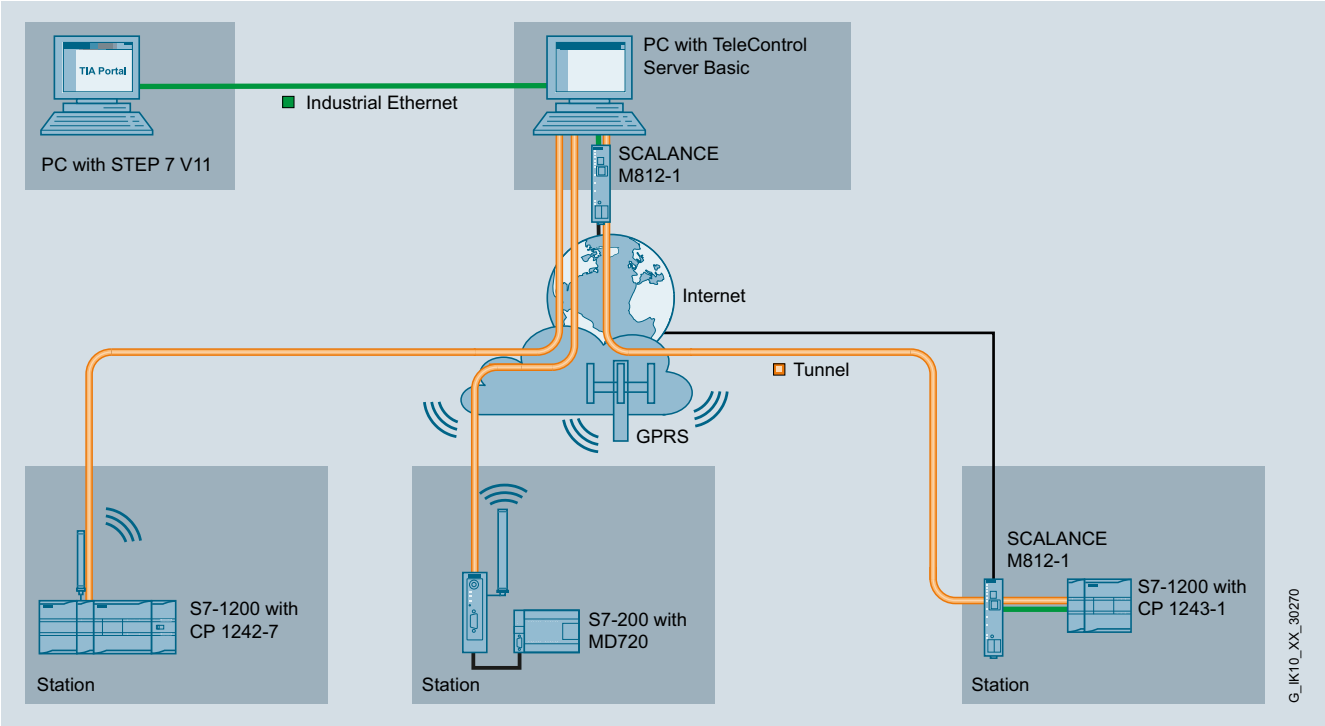

Operation of the CP 1242-7, CP 1243-1 and MD720 modem on the TeleControl Server Basic

- Connection of up to 5 000 stations to one TeleControl Server Basic OPC (UA) server;
  by connecting several TeleControl Server Basic 5000 OPC (UA) servers to one OPC client, more than 5 000 stations can be connected to a single control center
- Support for large projects:
  - Multi-project-capable: Several STEP 7 telecontrol projects can be organized in up to 2 000 groups
  - Multi-user-capable engineering: Simultaneous configuring by several users is possible
  - Support for configuring similar S7 stations
  - Step-by-step commissioning of stations and station groups
  - Expansions during runtime without interrupting operation
  - Shared operation of stations that are connected via private (M2M contract) or public APNs, or directly via Ethernet/ Internet
- Access to variables of the SIMATIC S7-1200 and S7-200 via the OPC (UA) interface by means of WinCC or standard OPC (UA) clients for control systems
- Communication between S7-1200 stations and S7-200 stations using the integral routing function via TeleControl Server Basic even with dynamic IP addresses
- Adjustable communication options:
  - Teleservice: STEP 7 diagnostics (V11 or higher) over the Internet;
    the S7-1200 GPRS Internet connection can be activated for teleservice either by the machine or plant operator, or via an authorized wake-up function by the programmer or maintenance technician (if this function has been enabled).
  - Permanent GPRS connection for cyclic or event-oriented data transfer (S7-200 and S7-1200)
  - Establishment of the GPRS connection if required by the OPC (UA) client (automatic wake-up via text message) or by the S7-1200 (S7-1200 only)
  - Configuration of monitoring time and time synchronization of S7 stations
- The PC on which the TeleControl Server Basic software is installed must be permanently accessible via a fixed IP address over the Internet, using DSL, for example, or it must have a dedicated line direct to the GPRS provider.
- Redundancy mode:
  - The TeleControl Server Basic can be operated redundantly in order to increase the availability of the automation data.
  - If both PCs are located in the same LAN no additional cabling is necessary for the synchronization of the redundant software packages.
  - The redundancy mode is possible under Windows Server 2008 R2.

Security

- Password authentication for incoming connection setup by a SIMATIC S7-200/S7-1200 station
- Optional double user authentication in the case of diagnostics via the teleservice gateway function of TeleControl Server Basic and the CP 1242-7 / CP 1243-1
- Secured data traffic between S7, the Internet and TeleControl Server Basic by means of encryption algorithms

© Siemens AG 2014

Function (continued)

Diagnostics

- Integrated diagnostic functions for
  - Group status signal of a project in a tree structure
  - Status of each station (GSM diagnostics information, PLC status)
  - Monitoring of temporary GPRS connections
  - "Wake-up" of stations that change from standby mode to online mode for diagnostics purposes
  - STEP 7 diagnostics of the S7-1200 via the CP 1242-7 / CP 1243-1 module (with dynamic or fixed IP address) from any PC with Internet access. The connection between the S7 and the STEP 7 PC to the TeleControl Server Basic is established here. The connection between STEP 7 and the S7 is established automatically via the Teleservice gateway function.
  - Establishment of the connection between the S7 and TeleControl Server Basic can also be optionally initiated via cell phone (authenticated).

Operation of TeleControl Server Basic together with TeleControl Professional

TeleControl Server Basic and TeleControl Professional operate with different protocols during data transmission. It is possible to combine a TeleControl Server Basic system with a TeleControl Professional system in a single SCADA system. This is carried out in the PC of the control center via the OPC (UA) server of TeleControl Server Basic.

Technical specifications

Article No.	**6NH9910-0AA21-0..**
Product-type designation	**TeleControl Server Basic V3**
Supported controllers	S7-1200 with CP1242-7 S7-1200 with CP1243-1 S7-200 with MD720 modem (block library included in the scope of supply)
Number of connections (stations) that can be operated (depending on the order version)	8, 32, 64, 256, 1 000, or 5 000 connections
Number of STEP 7 projects that can be operated in parallel	2 000 projects (structured representation, separation of the projects via programmable user rights)
Number of STEP 7 Teleservice connections that can be operated in parallel	5 connections per project (separation of the projects via programmable user rights)
Interfaces to the client	• OPC DCOM • OPC UA • Synchronous and asynchronous reading of variables
Interfaces and functions between the OPC server and SIMATIC S7	• Writing of variables in the SIMATIC S7 in the case of value changes to OPC (UA) variables • Transfer of SIMATIC S7 data to OPC (UA) variables (for event-driven communication from the SIMATIC S7) • Activatable cyclic reading of variables; adjustable time interval • Monitoring of connected SIMATIC S7 with time-of-day synchronization • Routing of data packets between connected SIMATIC S7-1200 stations or between S7-200 stations • Permanent GPRS connection; the tunnel is established from the GPRS modem • Temporary GPRS connection (as required); the tunnel is established from the GPRS modem and can be initiated by a text message sent automatically by the OPC (UA) server ("wake-up"). Manual "wake-up" using a mobile phone is also possible. • Via Internet access as server with public IP address (recommendation: fixed public Internet address) • Permanent Ethernet connection between the station and control center

Article No.	**6NH9910-0AA21-0..**
Product-type designation	**TeleControl Server Basic V3**
Operating systems	Windows 7 Professional 32/64 bit + Service Pack 1 Windows 7 Enterprise 32/64 bit + Service Pack 1 Windows 7 Ultimate 32/64 bit + Service Pack 1 Windows Server 2008 32 bit + Service Pack 2 Windows Server 2008 R2 Standard 64-bit Service Pack 1
Diagnostics	Station group monitoring Station monitoring Connection monitoring STEP 7 Teleservice across Internet and router boundaries – S7-1200 only
Configuration	Integral configuration tool Multi-project-capable Multi-user-capable with user management Configurations can be expanded at runtime

© Siemens AG 2014

Ordering data

	Article No.
TeleControl Server Basic V3.0	
Software for 8 to 5 000 stations; Single License for one installation; OPC (UA) server for GPRS and Ethernet/Internet communication with SIMATIC S7-1200 and SIMATIC S7-200 (GPRS only); connection management to remote stations; routing for connections between S7 stations; German and English operator interface; for Windows 7 Professional 32/64 bit + Service Pack 1 Windows 7 Enterprise 32/64 bit + Service Pack 1 Windows 7 Ultimate 32/64 bit + Service Pack 1 Windows Server 2008 32 bit + Service Pack 2 Windows Server 2008 R2 Standard 64 bit Service Pack 1	
• **TeleControl Server Basic 8 V3** Connection management for 8 SIMATIC S7-1200 or S7-200 stations	**6NH9910-0AA21-0AA0**
• **TeleControl Server Basic 32 V3** Connection management for 32 SIMATIC S7-1200 or S7-200 stations	**6NH9910-0AA21-0AF0**
• **TeleControl Server Basic 64 V3** Connection management for 64 SIMATIC S7-1200 or S7-200 stations	**6NH9910-0AA21-0AB0**
• **TeleControl Server Basic 256 V3** Connection management for 256 SIMATIC S7-1200 or S7-200 stations	**6NH9910-0AA21-0AC0**
• **TeleControl Server Basic 1000 V3** Connection management for 1 000 SIMATIC S7-1200 or S7-200 stations	**6NH9910-0AA21-0AD0**
• **TeleControl Server Basic 5000 V3** Connection management for 5 000 SIMATIC S7-1200 or S7-200 stations	**6NH9910-0AA21-0AE0**
• **TeleControl Server Basic UPGR V3** Upgrade package from Version V2.x to V3 for all license sizes	**6NH9910-0AA21-0GA0**
PowerPacks for TeleControl Server Basic	
• **PP TCSB 8 to 32 V3** for expansion from 8 to 32 stations	**6NH9910-0AA21-0AB1**
• **PP TCSB 32 to 64 V3** for expansion from 32 to 64 stations	**6NH9910-0AA21-0AF1**
• **PP TCSB 64 to 256 V3** for expansion from 64 to 256 stations	**6NH9910-0AA21-0AC1**
• **PP TCSB 256 to 1000 V3** for expansion from 256 to 1 000 stations	**6NH9910-0AA21-0AD1**
• **PP TCSB 1000 to 5000 V3** for expansion from 1 000 to 5 000 stations	**6NH9910-0AA21-0AE1**

	Article No.
Accessories	
CP 1242-7 communications processor Communications processor for connecting SIMATIC S7-1200 to TeleControl Server Basic via a 2G mobile wireless network (GSM/GPRS)	**6GK7242-7KX30-0XE0**
CP 1243-1 communications processor Communications processor for connection of SIMATIC S7-1200 to Telecontrol Server Basic or for secure connection to an Industrial Ethernet network via firewall and VPN mechanisms	**6GK7243-1BX30-0XE0**
MD720 MODEM GPRS modem for IP-based data transmission over 2G mobile radio network, quad band, AT command interface, automatic establishment of GPRS connection, switchable to CSD mode, RS232, including gender changer for RS232/PPI adapter	**6NH9720-3AA01-0XX0**
ANT794-4MR antenna Omnidirectional antenna for GSM (2G), UMTS (3G) and LTE (4G) networks; weather-resistant for indoor and outdoor use; 5 m cable with fixed connection to antenna; SMA connector; including mounting bracket, screws, wall plugs	**6NH9860-1AA00**
ANT794-3M antenna Flat panel antenna for GSM (2G) networks, for triband with 900/1 800/1 900 MHz; weather-resistant for indoor/outdoor use, 1.2 m cable with fixed connection to antenna; SMA connector, incl. assembly adhesive tape	**6NH9870-1AA00**

Note:

Industrial Ethernet routers and wireless routers can be found under "Remote networks"

© Siemens AG 2014

Overview

The CP 1242-7 communications processor is used to connect a SIMATIC S7-1200 to the globally widespread GSM/GPRS mobile radio network and has the following characteristics:

- Worldwide wireless exchange of data between S7-1200 controllers and/or between S7-1200 controllers and control centers with an Internet connection
- Communication based on the GPRS (**G**eneral **P**acket **R**adio **S**ervice) mobile wireless service with data transmission speeds of up to 86 Kbit/s in the downlink and 43 Kbit/s in the uplink
- GPRS mode with fixed IP addresses and dynamic IP addresses with standard mobile phone contract
- Time synchronization on the basis of NTP (**N**etwork **T**ime **P**rotocol)
- On-demand connection buildup via voice call or text message
- Sending and receiving of text messages
- Clearly laid out LED signaling for fast and easy diagnostics
- Compact industrial enclosure in S7-1200 design for mounting on a standard mounting rail
- Fast commissioning thanks to easy configuration using STEP 7

In conjunction with the TeleControl Server Basic software, the CP 1242-7 forms a telecontrol system with additional properties:

- Connection of up to 5 000 telecontrol stations to the control center via an OPC interface
- Data buffering in the substations in the event of connection failures
- Central status monitoring of the substations
- No special provider services required for fixed IP addresses
- Teleservice access with STEP 7 to the substations via the Internet

Benefits

get Designed for Industry

Connection of the S7-1200 to a mobile wireless network turns the controller into a telecontrol substation (RTU - Remote Terminal Unit) suitable for universal use.

- Data connection of difficult-to-access areas without high network infrastructure costs since the existing mobile wireless network can is used
- Machine maintenance without complicated integration into the end customer's IT networks
- Reduced maintenance and travel costs thanks to centralized management of remote automation solutions

The CP 1242-7 has been specially developed to meet the requirements of telecontrol systems in automation solutions:

- Avoidance of data loss thanks to rugged connection to the control center and buffering of the data
- Fast commissioning thanks to direct configuring using STEP 7

Application

- Data exchange and centralized data monitoring for automation solutions spread over large geographical areas
- Establishment of permanent or temporary communication link for mobile machines/vehicles without permanent location
- Global remote access to the end customer's machinery in compliance with IT security requirements
- Connection of difficult-to-access external stations without a network infrastructure

These applications can be found in the most diverse sectors:

- Water/wastewater treatment plants – pump/valve controllers
- Traffic and transportation – traffic light controls, lighting controls
- Power engineering – monitoring of transformer stations, meter readout
- Mechanical engineering – centralized remote maintenance of machines used around the world
- Wind energy – condition monitoring of wind turbines
- Vending machine manufacturers – monitoring, control of beverage vending machines

© Siemens AG 2014

Design

The CP 1242-7 offers all the advantages of the S7-1200 design:

- Rugged, compact plastic enclosure
- Easily accessible connection and diagnostics elements, protected by front flaps
- Removable connecting terminals
- Simple mounting on the mounting rail of the S7-1200
- 3-pin plug-in terminal strip for connection of the 24 V DC external supply voltage
- SMA connection for GSM/GPRS antennas

The CP 1242-7 is plugged into the left-hand system bus interface of the S7-1200. The power is supplied via a 3-pin terminal strip on top of the module. The antenna socket and the SIM card slot are located on the underside of the module, protected by the lower front flap.

Function

In conjunction with the TeleControl Server Basic software, the CP 1242-7 forms a telecontrol system on the basis of mobile wireless communication.

The external stations can be connected to the control center either continuously or as required. A higher-level control center system can exchange data with all stations via OPC. A service PC with STEP 7 can connect to any station via the control center for maintenance purposes.

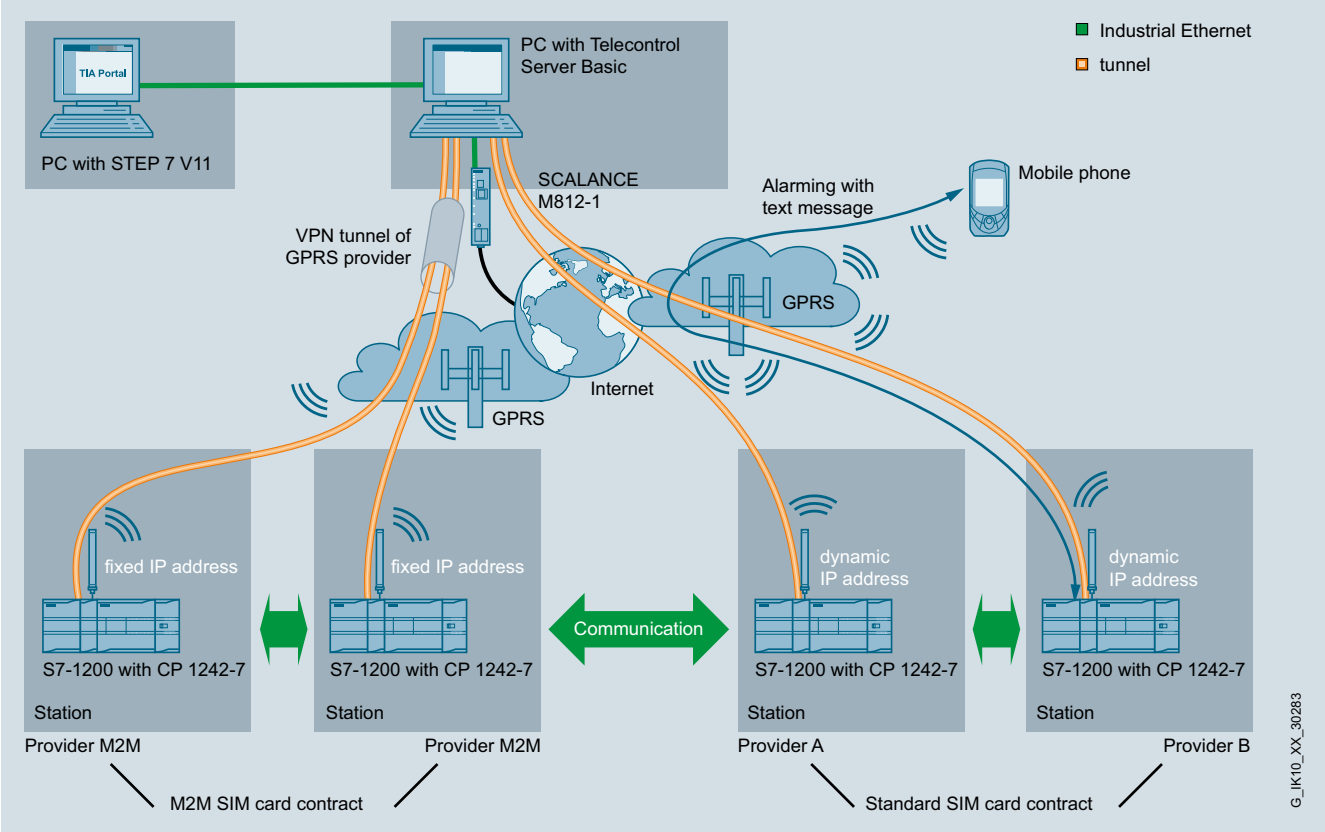

GSM/GPRS communication with CP 1242-7 / Alerting by means of SMS

© Siemens AG 2014

Function (continued)

Operating modes

The CP 1242-7 can be used in two different operating modes:

TeleControl server

In this mode, communication with the control center and other telecontrol stations is handled via a central TeleControl server. The CP 1242-7 is connected to the TeleControl server. The TeleControl Server Basic software both forwards the data to the control station or other telecontrol stations and monitors it.

GPRS Direct

In this mode, the CP 1242-7 communicates direct with a control center or other telecontrol stations. In contrast to TeleControl mode, this requires no TeleControl server or additional software. This mode can be selected if there is a guarantee that the communication partners of the station can be reached using a unique address. To ensure this, special network operator services, frequently referred to as machine-to-machine (M2M), have to be used in normal cases.

Configuration

All the necessary information (provider data, access rights, operating modes) is configured with STEP 7. STEP 7 Basic V11 or higher is required for configuring the CP 1242-7.

The data can also be reconfigured during runtime. A special library function is available for this purpose.

Data buffering

Brief connection failures in the mobile wireless network are bridged by data buffering. When the connection has been restored, the buffered data is time-stamped and sent.

Time synchronization

The mechanism for time-of-day synchronization of the CP 1242-7 can be set dependent on the operating mode.

If a TeleControl server is used in the control center, the control center forwards the time of day to all substations. If TeleControl Server Basic is not used, synchronization can take place via an NTP server.

The CPU program can use this time to set the internal time-of-day for the station.

Function library

A function library for the following functions is available for the CP 1242-7:

- Data exchange: Send and receive functions enable data exchange with other stations or with the control center.
- Sending/receiving text messages
- Configuration: Reconfiguring can take place during operation with the help of a function block

Diagnostics/remote maintenance

An online connection to a remote S7-1200 station with CP 1242-7 can be established from STEP 7 via GPRS/Internet. After the connection has been established, all the familiar online functions for remote maintenance (download, diagnostics) are available.

Technical specifications

Article No.	**6GK7242-7KX30-0XE0**
Product-type designation	**CP 1242-7**
Transmission rate	
Transfer rate with GPRS transmission	
• with uplink maximum	43 kbit/s
• with downlink maximum	86 kbit/s
Wireless technology	
Type of mobile wireless service	
• is supported	
- SMS	Yes
- GPRS	Yes
• note	GPRS (multislot Class 10)
Type of mobile wireless network is supported	
• GSM	Yes
• UMTS	No
Operating frequency	
• 850 MHz	Yes
• 900 MHz	Yes
• 1800 MHz	Yes
• 1900 MHz	Yes
Transmit power	
• at operating frequency 850 MHz	2 W
• at operating frequency 900 MHz	2 W
• at operating frequency 1 800 MHz	1 W
• at operating frequency 1 900 MHz	1 W

Article No.	**6GK7242-7KX30-0XE0**
Product-type designation	**CP 1242-7**
Interfaces	
Number of electrical connections	
• for external antenna(s)	1
• for power supply	1
Number of slots for SIM cards	1
Design of the electrical connection	
• for external antenna(s)	SMA socket (50 ohms)
• for power supply	3-pin terminal strip
Design of slot for SIM card	Slot under front flap
Supply voltage, current consumption, power loss	
Type of supply voltage	DC
Supply voltage external	24 V
Relative positive tolerance at 24 V with DC	20 %
Relative negative tolerance at 24 V with DC	20 %
Consumed current from external supply voltage at 24 V with DC	
• typical	0.1 A
• maximum	0.22 A
Resistive loss	2.4 W

© Siemens AG 2014

Technical specifications (continued)

Article No.	6GK7242-7KX30-0XE0
Product-type designation	**CP 1242-7**
Permitted ambient conditions	
Ambient temperature	
• for vertical installation during operating phase	0 … 45 °C
• for horizontal installation during operating phase	0 … 55 °C
• during storage	-40 … +70 °C
• during transport	-40 … +70 °C
• Comment	-
Relative humidity at 25 °C without condensation during operating maximum	95 %
Protection class IP	IP20
Design, dimensions and weight	
Module format	Compact module S7-1200 single width
Width	30 mm
Height	100 mm
Depth	75 mm
Net weight	0.133 kg
Product properties, functions, components general	
Number of modules	
• per CPU maximum	3
• note	-
Performance data	
Performance data open communication	
Number of possible connections for open communication by means of TC blocks maximum	5
Data volume as user data per polling maximum	1 024 byte
Performance data S7 communication	
Number of possible connections for S7 communication	
• maximum	-
• with PG connections maximum	-
• with PG/OP connections maximum	-
• note	-

Article No.	6GK7242-7KX30-0XE0
Product-type designation	**CP 1242-7**
Performance data telecontrol	
Suitability for use	
• node station	-
• substation	-
• control center	-
• note	-
Connection to the control center	TeleControl Server Basic
• note	Connection to Scada system using OPC interface
• by means of a permanent connection	supported
• by means of demand-oriented connection	supported
Protocol is supported	
• DNP3	No
• IEC 60870-5	No
Product function data buffering if connection is aborted	Yes
• note	up to 1 000 message frames
Data volume as user data per station in telecontrol mode maximum	2 048 byte
Number of data points per station maximum	-
Performance data Teleservice	
Diagnostic function online diagnostics with SIMATIC STEP 7	Yes
Product function program download with SIMATIC STEP 7	Yes
Product function remote firmware update	No
Product functions management, configuration	
Configuration software required	STEP 7 Basic/Professional V11 + HSP (TIA Portal) or higher
Product functions Security	
Product function password protection for teleservice access	Yes
Product function encrypted data transmission	Yes
Product functions Time	
Protocol is supported NTP	Yes

© Siemens AG 2014

Ordering data

	Article No.
Communications processor CP 1242-7[1)]	
Communications processor for connecting SIMATIC S7-1200 to GSM/GPRS mobile wireless network	**6GK7242-7KX30-0XE0**
Accessories	
TeleControl Server Basic V3.0	
Software for 8 to 5 000 stations; Single License for one installation; OPC (UA) server for GPRS and Ethernet/Internet communication with SIMATIC S7-1200 and SIMATIC S7-200 (GPRS only); connection management to remote stations; routing for connections between S7 stations; German and English operator interface; for Windows 7 Professional 32/64-bit + Service Pack 1 Windows 7 Enterprise 32/64-bit + Service Pack 1 Windows 7 Ultimate 32/64-bit + Service Pack 1 Windows Server 2008 32-bit + Service Pack 2 Windows Server 2008 R2 Standard 64-bit Service Pack 1	
• **TeleControl Server Basic 8 V3** Connection management for 8 SIMATIC S7-1200 or S7-200 stations	**6NH9910-0AA21-0AA0**
• **TeleControl Server Basic 32 V3** Connection management for 32 SIMATIC S7-1200 or S7-200 stations	**6NH9910-0AA21-0AF0**
• **TeleControl Server Basic 64 V3** Connection management for 64 SIMATIC S7-1200 or S7-200 stations	**6NH9910-0AA21-0AB0**
• **TeleControl Server Basic 256 V3** Connection management for 256 SIMATIC S7-1200 or S7-200 stations	**6NH9910-0AA21-0AC0**
• **TeleControl Server Basic 1000 V3** Connection management for 1 000 SIMATIC S7-1200 or S7-200 stations	**6NH9910-0AA21-0AD0**
• **TeleControl Server Basic 5000 V3** Connection management for 5 000 SIMATIC S7-1200 or S7-200 stations	**6NH9910-0AA21-0AE0**
• **TeleControl Server Basic UPGR V3** Upgrade package from Version V2.x to V3 for all license sizes	**6NH9910-0AA21-0GA0**

	Article No.
Accessories *(continued)*	
ANT794-4MR antenna	**6NH9860-1AA00**
Omnidirectional antenna for GSM (2G), UMTS (3G) and LTE (4G) networks; weather-resistant for indoor and outdoor use; 5 m cable with fixed connection to antenna; SMA connector; including mounting bracket, screws, wall plugs	
ANT794-3M antenna	**6NH9870-1AA00**
Flat panel antenna for GSM (2G) networks, for triband with 900/1 800/1 900 MHz; weather-resistant for indoor/outdoor use, 1.2 m cable with fixed connection to antenna; SMA connector, incl. assembly adhesive tape	
STEP 7 Basic Engineering Software V13 (TIA Portal)	
Target system: SIMATIC S7-1200, S7-1500, S7-300, S7-400, WinAC *Requirement:* Windows 7 Professional (64 bit), Windows 7 Enterprise (64 bit), Windows 7 Ultimate SP1 (64 bit), Windows 8.1 (64 bit), Windows 8.1 Professional (64 bit), Windows 8.1 Enterprise (64 bit), Windows Server 2008 R2 StdE (full installation), Windows Server 2012 StdE (full installation) *Form of delivery:* German, English, Chinese, Italian, French, Spanish	
• STEP 7 Basic V13, Floating License	**6ES7822-0AA03-0YA5**
• STEP 7 Basic V13, Trial License	**6ES7822-0AA03-0YA7**
• Upgrade STEP 7 Basic V12 to STEP 7 Professional Basic V13, Floating License	**6ES7822-0AA03-0YE5**
Software Update Service	
For a period of 12 months and for a fixed price, the customer is automatically provided with all upgrades and service packs for each installed software package. The contract is automatically extended by a further year unless canceled at least 12 weeks prior to expiration. Requires the current software version.	
• STEP 7 Basic V1x, Software Update Service Standard, 1 year	**6ES7822-0AA00-0YL0**
• STEP 7 Basic V1x, Software Update Service Compact, 1 year;	**6ES7822-0AA00-0YM0**

[1)] Please note national approvals under http://www.siemens.com/mobilenetwork-approvals

More information

Selection tools:

To assist in selecting the right Industrial Wireless Communication, the SIMATIC NET Selection Tool is available at:

- Online version
  http://www.siemens.com/snst
- Offline version:
  http://www.siemens.com/snst-download

Radio approvals:

Current approvals can be found on the Internet at:
http://www.siemens.com/mobilenetwork-approvals

© Siemens AG 2014

Overview

The CP 1243-1 communications processor is used for connecting a SIMATIC S7-1200 to the TeleControl Server Basic control center software via Ethernet, and for secure communication via IP-based networks.

The CP has the following features:

- Ethernet-based connection to TeleControl Server basic, e.g. via Internet
- Data transfer of measured values, control variables, or alarms optimized for telecontrol systems
- Automatic sending of alert emails
- Data buffering of up to 64 000 values ensures a secure database even with temporary connection failures
- Secure communication via VPN connections based on IPSec
- Access protection by means of Stateful Inspection Firewall
- Clearly laid out LED signaling for fast and easy diagnostics
- Compact industrial enclosure in S7-1200 design for mounting on a standard mounting rail
- Fast commissioning thanks to easy configuration using STEP 7

Benefits

get Designed for Industry

- **Data security**
  The CP 1243-1 has a large buffer for several thousand data values. Downtimes in the transmission link can then be bridged.
- **Fully automatic time stamp**
  To enable subsequent and correct archiving of process data in the control system, all data frames are assigned with a time stamp at their place of origin.
- **Fast and flexible data communication**
  Operators are therefore quickly provided with alarms, statuses and values from the process, and they can influence process control by entering commands or setpoints at any time.
- **Simple and low-cost engineering**
  The cyclic or event-controller transfer of measurements, setpoints or alarms can be implemented in only a few operations and without programming effort.
- **Remote diagnostics**
  Saving of traveling and maintenance costs due to cost-effective remote programming, diagnostics, control and monitoring via the Internet
- **Industrial Security**
  Securing the system against unauthorized access by means of
  - Central access protection for any devices within an automation cell, e.g. by means of authentication of the network stations
  - Secure remote access via the Internet by means of data encryption (VPN) and data integrity checking

Application

By using the CP 1243-1, the S7-1200 can be used as a remote terminal unit (substation) in telecontrol applications. Typical uses include the collection of measured values in geographically widely distributed outdoor areas (level measurement for water tanks) or centralized opening and closing of valves (oil/gas transport in pipelines).

- Plants in water, wastewater or environmental sectors:
  - Irrigation systems
  - Drinking water supply
- Monitoring of power networks for consumption metering and cost control
  - District heating networks
  - Wind farms
- Plants in the oil and gas sector
  - Oilfield water injection
  - Pipelines
- Transportation systems
  - Ventilation control in tunnel systems
  - Traffic control

Regardless of the telecontrol features of the CP, it can also be used for purely security applications if the automation system is to be connected securely to a higher-level IT network. This protects the SIMATIC S7-1200 against unauthorized access from an Ethernet network. The CP 1243-1 allows secure access via a LAN and allows data transfer between devices or network segments to be protected from data manipulation/espionage.

© Siemens AG 2014

Application (continued)

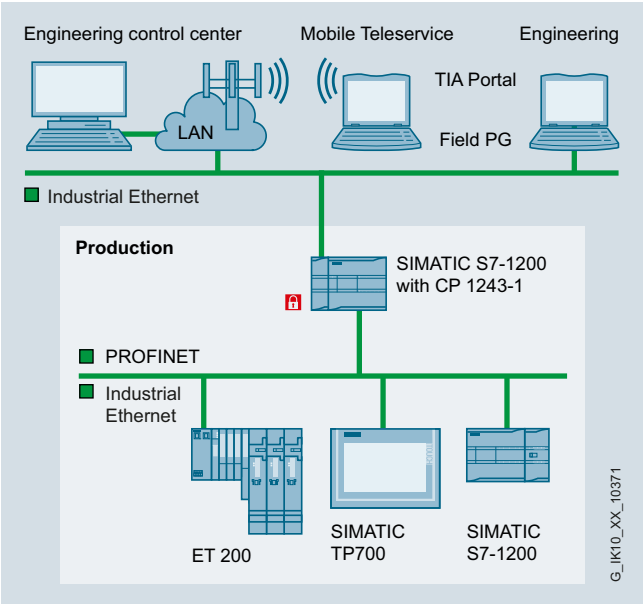

Cell protection for SIMATIC S7-1200 with CP 1243-1 (Security Integrated)

Design

The CP 1243-1 offers all the advantages of the S7-1200 design:

- Rugged, compact plastic enclosure
- Easily accessible connection and diagnostics elements, protected by front flaps
- Simple mounting on the mounting rail of the S7-1200

The CP 1243-1 DNP3 is plugged into the left-hand system bus interface of the S7-1200. Power is supplied directly via the S7-1200. No additional wiring is necessary. Any required modems or routers are connected via the Ethernet interface on the underside of the module.

Function

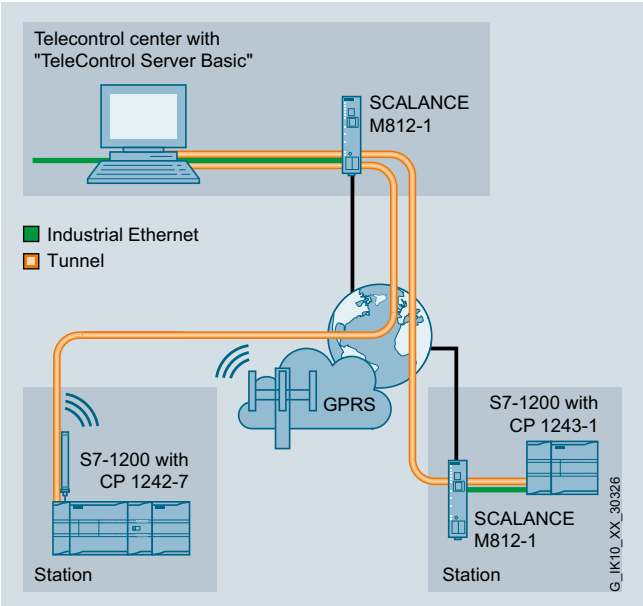

Connection of the S7-1200 to TeleControl Servers via mobile wireless and DSL Internet access

The CP 1243-1 is a communication module for the S7-1200. The module allows the S7-1200 to be connected as a remote station to TeleControl Server basic in just a few steps.

Completely configurable application through "data point configuration"

The introduction of the "data point configuration" in STEP 7 dispenses with all programming effort for transfer of data to the control center.

The data of the CPU relevant to the control center is selected via user-friendly "item browsing" in STEP 7. In a clearly-arranged menu, the data transfer parameters are then assigned to the data points selected in this way. The cyclic or event-controller transfer of measurements, setpoints or alarms can thus be implemented in only a few operations and without programming effort.

Data backup

Data losses are prevented by the data buffering mechanisms integrated in the product.

In the event of a connection failure, up to 64 000 time-stamped values are buffered. When the connection returns, the buffered values are automatically transferred to the control center in the right order.

E-mail alerting

Alert e-mails can be configured for timely provision of stations' states to service or maintenance personnel. If previously defined events (such as threshold violation) should occur, application-specific information is sent automatically by e-mail.

Diagnostics

The CP 1243-1 offers comprehensive diagnostic options for a quick and informative analysis of the station status. Elementary diagnostic information about the connection to the control center is signaled directly via LEDs at the CP.

Using STEP 7, comprehensive information can be retrieved, such as connection history, buffer status, and the transferred measured values.

Remote maintenance

For remote access from the control center to the substation, the CP provides a remote maintenance port in parallel with process operation. This ensures access for monitoring and program changes.

Interfaces

The CP 1243-1 has an Ethernet interface to connection to the control center. The S7-1200 can be connected via an existing network or via other media by using additional routers (e.g. SCALANCE M for Internet connection via DSL).

Power supply

Extra wiring for the CP power supply is not required. Power is supplied directly via the backplane bus of the S7-1200.

© Siemens AG 2014

Technical specifications

Article No.	6GK7243-1BX30-0XE0
Product-type designation	**CP 1243-1**
Transmission rate	
Transfer rate	
• at the interface 1	10 … 100 Mbit/s
Interfaces	
Number of electrical connections	
• at interface 1 in accordance with Industrial Ethernet	1
Design of electrical connection	
• at interface 1 in accordance with Industrial Ethernet	RJ45 port
Supply voltage, current consumption, power loss	
Type of supply voltage	DC
Supply voltage 1 from backplane bus	5 V
Resistive loss	1.25 W
Permitted ambient conditions	
Ambient temperature	
• for vertical installation during operating phase	-20 … +60 °C
• for horizontal installation during operating phase	-20 … +70 °C
• during storage	-40 … +70 °C
• during transport	-40 … +70 °C
• Comment	-
Relative humidity at 25 °C without condensation during operating maximum	95 %
Protection class IP	IP20
Design, dimensions and weight	
Module format	Compact module S7-1200 single width
Width	30 mm
Height	110 mm
Depth	75 mm
Net weight	0.122 kg
Product properties, functions, components general	
Number of modules	
• per CPU maximum	3
Performance data	
Performance data open communication	
• note	like CPU
Performance data S7 communication	
Number of possible connections for S7 communication	
• note	like CPU

Article No.	6GK7243-1BX30-0XE0
Product-type designation	**CP 1243-1**
Performance data telecontrol	
Suitability for use	
• node station	No
• substation	Yes
• control center	No
Connection to the control center	
• note	
• by means of a permanent connection	supported
Protocol is supported	
• DNP3	No
• IEC 60870-5	No
Product function data buffering if connection is aborted	Yes
• note	64 000 values
Number of data points per station maximum	200
Performance data Teleservice	
Diagnostic function online diagnostics with SIMATIC STEP 7	Yes
Product function	
• program download with SIMATIC STEP 7	Yes
• remote firmware update	Yes
Product functions management, configuration	
Configuration software required	STEP 7 Basic/Professional V13 (TIAPortal) or higher + HSP
Product functions Security	
Design of the firewall	stateful inspection
Product function with VPN connection	IPSec
Type of encryption algorithms with VPN connection	
Type of authentication procedure with VPN connection	Preshared key (PSK), X.509v3 certificates
Type of hashing algorithms with VPN connection	MD5, SHA-1
Number of possible connections for VPN connection	8
Product function	
• password protection for Web applications	No
• ACL - IP-based	No
• ACL - IP-based for PLC/routing	No
• switchoff of non-required services	Yes
• blocking of communication via physical ports	No
• log file for unauthorized access	No
Product functions Time	
Protocol is supported NTP	No

© Siemens AG 2014

Ordering data

	Article No.
Communications processor CP 1243-1 Communications processor for connection of SIMATIC S7-1200 to TeleControl Server Basic or for secure connection via IP-based networks	**6GK7243-1BX30-0XE0**
Accessories	
TeleControl Server Basic V3.0 Software for 8 to 5 000 stations; Single License for one installation; OPC (UA) server for GPRS and Ethernet/Internet communication with SIMATIC S7-1200 and SIMATIC S7-200 (GPRS only); connection management to remote stations; routing for connections between S7 stations; German and English operator interface; for Windows 7 Professional 32/64-bit + Service Pack 1 Windows 7 Enterprise 32/64-bit + Service Pack 1 Windows 7 Ultimate 32/64-bit + Service Pack 1 Windows Server 2008 32-bit + Service Pack 2 Windows Server 2008 R2 Standard 64-bit Service Pack 1	
• **TeleControl Server Basic 8 V3** Connection management for 8 SIMATIC S7-1200 or S7-200 stations	**6NH9910-0AA21-0AA0**
• **TeleControl Server Basic 32 V3** Connection management for 32 SIMATIC S7-1200 or S7-200 stations	**6NH9910-0AA21-0AF0**
• **TeleControl Server Basic 64 V3** Connection management for 64 SIMATIC S7-1200 or S7-200 stations	**6NH9910-0AA21-0AB0**
• **TeleControl Server Basic 256 V3** Connection management for 256 SIMATIC S7-1200 or S7-200 stations	**6NH9910-0AA21-0AC0**
• **TeleControl Server Basic 1000 V3** Connection management for 1 000 SIMATIC S7-1200 or S7-200 stations	**6NH9910-0AA21-0AD0**
• **TeleControl Server Basic 5000 V3** Connection management for 5 000 SIMATIC S7-1200 or S7-200 stations	**6NH9910-0AA21-0AE0**
• **TeleControl Server Basic UPGR V3** Upgrade package from Version V2.x to V3 for all license sizes	**6NH9910-0AA21-0GA0**
CSM 1277 Compact Switch Module Unmanaged switch for connecting a SIMATIC S7-1200 and up to three further nodes to Industrial Ethernet with 10/100 Mbit/s; 4 x RJ45 ports; external 24 V DC power supply, diagnostics on LEDs, S7-1200 module including electronic manual on CD-ROM	**6GK7277-1AA10-0AA0**

	Article No.
Accessories (continued)	
IE FC RJ45 Plugs RJ45 plug connector for Industrial Ethernet with a rugged metal housing and integrated insulation displacement contacts for connecting Industrial Ethernet FC installation cables; 180° cable outlet; for network components and CPs/CPUs with Industrial Ethernet interface	
• 1 pack = 1 unit	**6GK1901-1BB10-2AA0**
• 1 pack = 10 units	**6GK1901-1BB10-2AB0**
• 1 pack = 50 units	**6GK1901-1BB10-2AE0**
IE FC TP Standard Cable GP 2 x 2 (Type A) 4-core, shielded TP installation cable for connection to IE FC Outlet RJ45/ IE FC RJ45 Plug; PROFINET-compatible; with UL approval; Sold by the meter; max. length 1 000 m; minimum order 20 m	**6XV1840-2AH10**
IE FC Stripping Tool Preadjusted stripping tool for fast stripping of Industrial Ethernet FC cables	**6GK1901-1GA00**
STEP 7 Basic Engineering Software V13 (TIA Portal) *Target system:* SIMATIC S7-1200, S7-1500, S7-300, S7-400, WinAC *Requirement:* Windows 7 Professional (64 bit), Windows 7 Enterprise (64 bit), Windows 7 Ultimate SP1 (64 bit), Windows 8.1 (64 bit), Windows 8.1 Professional (64 bit), Windows 8.1 Enterprise (64 bit), Windows Server 2008 R2 StdE (full installation), Windows Server 2012 StdE (full installation) *Form of delivery:* German, English, Chinese, Italian, French, Spanish	
• STEP 7 Basic V13, Floating License	**6ES7822-0AA03-0YA5**
• STEP 7 Basic V13, Trial License	**6ES7822-0AA03-0YA7**
• Upgrade STEP 7 Basic V12 to STEP 7 Professional Basic V13, Floating License	**6ES7822-0AA03-0YE5**
Software Update Service For a period of 12 months and for a fixed price, the customer is automatically provided with all upgrades and service packs for each installed software package. The contract is automatically extended by a further year unless canceled at least 12 weeks prior to expiration. Requires the current software version.	
• STEP 7 Basic V1x, Software Update Service Standard, 1 year	**6ES7822-0AA00-0YL0**
• STEP 7 Basic V1x, Software Update Service Compact, 1 year;	**6ES7822-0AA00-0YM0**

More information

Technical requirements/compatibility

An S7-1200 CPU with firmware version 3 is required for operating the CP 1243-1 DNP3.

The CP 1243-1 DNP3 is configured using STEP 7 Basic/Professional V13 (TIA Portal) and higher.

To connect to PCS 7/WinCC control center systems, the TeleControl Server Basic V3 software package is required.

© Siemens AG 2014

Overview

- The MODEM MD720 is the successor of the SINAUT modem MD720-3. All functions of the replaced SINAUT modem MD720-3 are also supported by the MODEM MD720.
- GSM/GPRS mobile radio modem MD720 with RS 232 interface for IP-based communication in industrial applications
- DIN rail mounting
- 24 VDC power supply
- Supports the GSM services CSD [1], SMS and GPRS
- Use with Telecontrol Basic:
  Data transmission over tunneled GPRS connection with SIMATIC S7
- Use with SINAUT ST7:
  Data transmission via CSD, GPRS, transmission of text messages
- AT command interface: for remote maintenance or sending text messages

[1] CSD – **C**ircuit **S**witched **D**ata (data transmission via GSM dialup connection)

Benefits

get Designed for Industry

- Can be used worldwide due to quad band technology (observe national regulations)
- Quick assembly due to standard rail mounting

For GPRS operation in combination with TeleControl Server Basic:

- Low operating costs for a permanent wireless online connection due to optimized communication with efficient message format
- The location of the central control station is irrelevant due to the Internet connection between the mobile phone provider and the OPC (UA) server (TeleControl Server Basic)
- Secure connection over public networks through encrypted data transmission plus additional measures of the GPRS provider
- Simple configuration of wireless connected plants without specialist radio knowledge
- Modem replacement is possible by non-specialists since parameterization is carried out through the S7-200
- Cost savings thanks to remote servicing and remote programming
- Various different example applications are available in Customer Service under the heading "Application & Tools" to enable applications to be created quickly using combinations of perfectly interacting automation components.

© Siemens AG 2014

Application

- GSM modem for the SINAUT ST7 telecontrol system for data transmission via dialup connection (CSD service)
- GSM modem for the TeleControl Basic system for data transmission via GPRS
- Construction of systems for monitoring and controlling of simple telecontrol stations
- Energy-saving concepts for plants, e.g. by means of status-dependent speed control of pumps in remote stations
- Control and monitoring of, for example:
  - Sewage treatment plants, water treatment
  - Oil and gas supplies
  - District heating networks
  - Power distribution
  - Pumping stations
  - Automatic machines
  - Traffic control systems
  - Buildings
  - Intelligent advertising panels
  - Weather stations
  - Lighthouses and buoys
  - Wind energy and photovoltaic plants
- Linking of mobile stations, with central monitoring/control of track vehicles, special vehicles, local public transport, complex building machines, ships on rivers and in coastal areas
- Remote programming and maintenance of the SIMATIC S7-200 via a GSM dialup connection (CSD service)

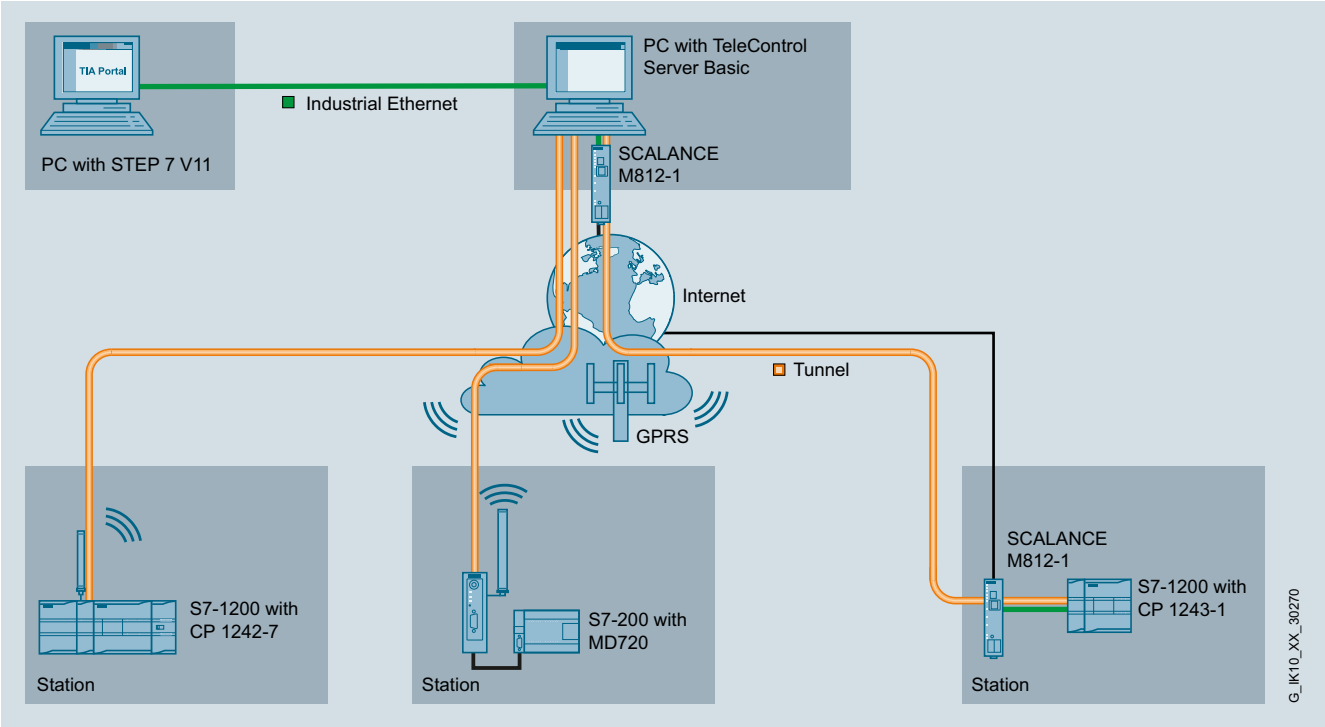

GPRS communication between SIMATIC S7-200 with MODEM MD720 and TeleControl Server Basic

© Siemens AG 2014

Design

- Rugged plastic enclosure for DIN rail mounting
- 9-pin Sub-D socket with RS232 interface (PPI adapter for SIMATIC S7-200 necessary)
- Diagnostics LEDs for modem status, field strength and connection check
- SET service key
- 4-pin screw terminal for connection to the 24 V DC supply voltage
- SMA connection for GSM/GPRS antennas

Function

- Quad band GSM with the frequency bands 850/900/1 800/ 1 900 MHz
- GPRS Multislot Class 10 (gross: max. 42 Kbit/s upload, max. 54 Kbit/s download).
- Automatic establishment and holding of IP-based online connection over GPRS to the Internet
- Data exchange with PC-based TeleControl Server Basic (router and OPC (UA) server) application; data exchange with further MD720 modems possible over routing of TeleControl Server Basic
- Hot switchover between GPRS and CSD (modem operation)
- CSD and GPRS connection controllable using AT commands
- Sending of SMS and fax (via SMS) using GSM services
- Remote programming of S7-200 with MicroWin in GSM modem mode (CSD mode)
- Secure access to SIMATIC S7-200 data, also over mobile radio provider networks which do not provide public and fixed IP addresses for the modem

Configuration

- Parameterization using PLC blocks with the Micro/Win programming tool for SIMATIC S7-200
- PLC blocks are part of TeleControl Server Basic
- AT command interface

Security

- Approval of up to 3 call numbers for incoming GSM connections (CLIP function) for teleservice
- User name and password for GSM connection
- Unlimited client and server operation even in protected GPRS networks with private IP addresses of the mobile radio providers
- Secure data transfer in GPRS mode between modem, the Internet, and TeleControl Server Basic using encryption algorithms

Diagnostics / maintenance

- Status of establishment of connection, and of an existing connection on front LED display
- Reading of configuration data over the RS232 interface
- Connection status to modem and to PLC can be monitored in Telecontrol Basic
- Direct, additional access over GSM (modem operation) for teleservice (remote programming, remote diagnostics)

© Siemens AG 2014

Technical specifications

Article No.	6NH9720-3AA01-0XX0
Product-type designation	**MODEM MD720 GSM/GPRS, 2G**
Transfer rate	
• for GSM transmission	9 600 bit/s
• with GPRS transmission	
- with downlink maximum	54 kbit/s
- with uplink maximum	42 kbit/s
Interfaces	
Number of electrical connections	
• for internal network	1
• for external network	1
• for power supply	1
Design of the electrical connection	
• for internal network	9 pin Sub D
• for external network	SMA antenna socket (50 ohms)
• for power supply	4-pole terminal strip
WAN connection	
Type of mobile wireless network is supported GSM	Yes
Type of mobile wireless service is supported	
• GPRS	Yes
Operating frequency for GSM transmission	
• 850 MHz	Yes
• 900 MHz	Yes
• 1800 MHz	Yes
• 1900 MHz	Yes
Type of GPRS time slot method Multislot Class 10	Yes
Supply voltage, current consumption, power loss	
Type of supply voltage	DC
Supply voltage	24 V
Supply voltage	
• minimum	12 V
• maximum	30 V
Consumed current maximum	355 mA
Active power loss typical	3.4 W

Article No.	6NH9720-3AA01-0XX0
Product-type designation	**MODEM MD720 GSM/GPRS, 2G**
Permitted ambient conditions	
Ambient temperature	
• during operating	-20 … +60 °C
• during storage	-25 … +85 °C
Relative humidity at 25 °C during operating maximum	95 %
Protection class IP	IP30
Design, dimensions and weight	
Design	compact
Depth	90 mm
Height	100 mm
Width	30 mm
Net weight	150 g
Mounting type 35 mm DIN rail mounting	Yes
Product functions management, configuration	
Product function	
• CLI	No
• web-based management	No
• MIB support	No
Protocol is supported	
• Telnet	No
• HTTP	No
Type of configuration	AT commands
Standards, specifications, approvals	
Standard	
• for EMC	EN 61000-6-2, EN 61000-6-4, EN 55022, EN 55024, EN 301 489-1, EN 301 489-7
• for hazardous zone	II 3 G Ex nA IIC T4 Gc
• for safety of CSA and UL	UL 60950
• for emitted interference	EN 55022, EN 61000-6-4
• for interference immunity	EN 55024, EN 61000-6-2
Verification of suitability	
• CE mark	Yes

© Siemens AG 2014

Ordering data

	Article No.
MODEM MD720 [1]	**6NH9720-3AA01-0XX0**
GPRS modem for IP-based data transmission over 2G mobile network, quad band, AT command interface, automatic establishment of GPRS connection, switchable to CSD mode, RS 232; including gender changer for RS 232/PPI adapter; manual in German, English, French, Italian, Spanish, Portuguese, Chinese, Russian	
Accessories	
TeleControl Server Basic	
Software for 8 to 5 000 stations; Single License for one installation; OPC (UA) server for GPRS/Ethernet communication with SIMATIC S7-1200 and SIMATIC S7-200 (GPRS only); connection management to max. 5 000 remote stations; routing for connections between S7 stations; German and English user interface; for Windows 7 Professional 32/64-bit, Windows 7 Enterprise 32/64-bit, Windows 7 Ultimate 32/64-bit, Windows Server 2008 32-bit, Windows Server 2008 R2 Standard 64-bit; documentation on CD-ROM in German and English	
• **TeleControl Server Basic 8 V3** Connection management for 8 SIMATIC S7-1200 or S7-200 stations	**6NH9910-0AA21-0AA0**
• **TeleControl Server Basic 32 V3** Connection management for 32 SIMATIC S7-1200 or S7-200 stations	**6NH9910-0AA21-0AF0**
• **TeleControl Server Basic 64 V3** Connection management for 64 SIMATIC S7-1200 or S7-200 stations	**6NH9910-0AA21-0AB0**
• **TeleControl Server Basic 256 V3** Connection management for 256 SIMATIC S7-1200 or S7-200 stations	**6NH9910-0AA21-0AC0**
• **TeleControl Server Basic 1000 V3** Connection management for 1 000 SIMATIC S7-1200 or S7-200 stations	**6NH9910-0AA21-0AD0**
• **TeleControl Server Basic 5000 V3** Connection management for 5 000 SIMATIC S7-1200 or • S7-200 stations	**6NH9910-0AA21-0AE0**
• **TeleControl Server Basic UPGR V3** Upgrade package from Version V2.x to V3 for all license sizes	**6NH9910-0AA21-0GA0**

[1] Please note national approvals under http://www.siemens.com/mobilenetwork-approvals

	Article No.
Accessories (continued)	
ANT794-4MR antenna	**6NH9860-1AA00**
Omnidirectional antenna for GSM (2G), UMTS (3G) and LTE (4G) networks; weather-resistant for indoor and outdoor use; 5 m cable with fixed connection to antenna; SMA connector; including mounting bracket, screws, wall plugs	
ANT794-3M antenna	**6NH9870-1AA00**
Flat panel antenna for GSM (2G) networks, for triband with 900/1 800/1 900 MHz; weather-resistant for indoor/outdoor use, 1.2 m cable with fixed connection to antenna; SMA connector, incl. assembly adhesive tape	
SIMATIC S7-200 PPI modem cable	**6NH9701-0AD**
For connecting the S7-200 to the MD720 MODEM	
Connecting cable	**6NH7701-5AN**
For connecting a TIM3V-IE/TIM4 (RS 232) with the MD720 MODEM (access to GSM network). Also suitable for third-party modems or radio equipment with RS 232 standard; cable length 2.5 m.	
SITOP compact 24 V/0.6 A	**6EP1331-5BA00**
1-phase power supply with wide-range input 85 … 264 V AC/110 … 300 V DC, stabilized output voltage 24 V, rated output current value 0.6 A, slim design	

More information

Radio approvals

Current approvals can be found on the Internet at:
http://www.siemens.com/mobilenetwork-approvals

© Siemens AG 2014

Overview

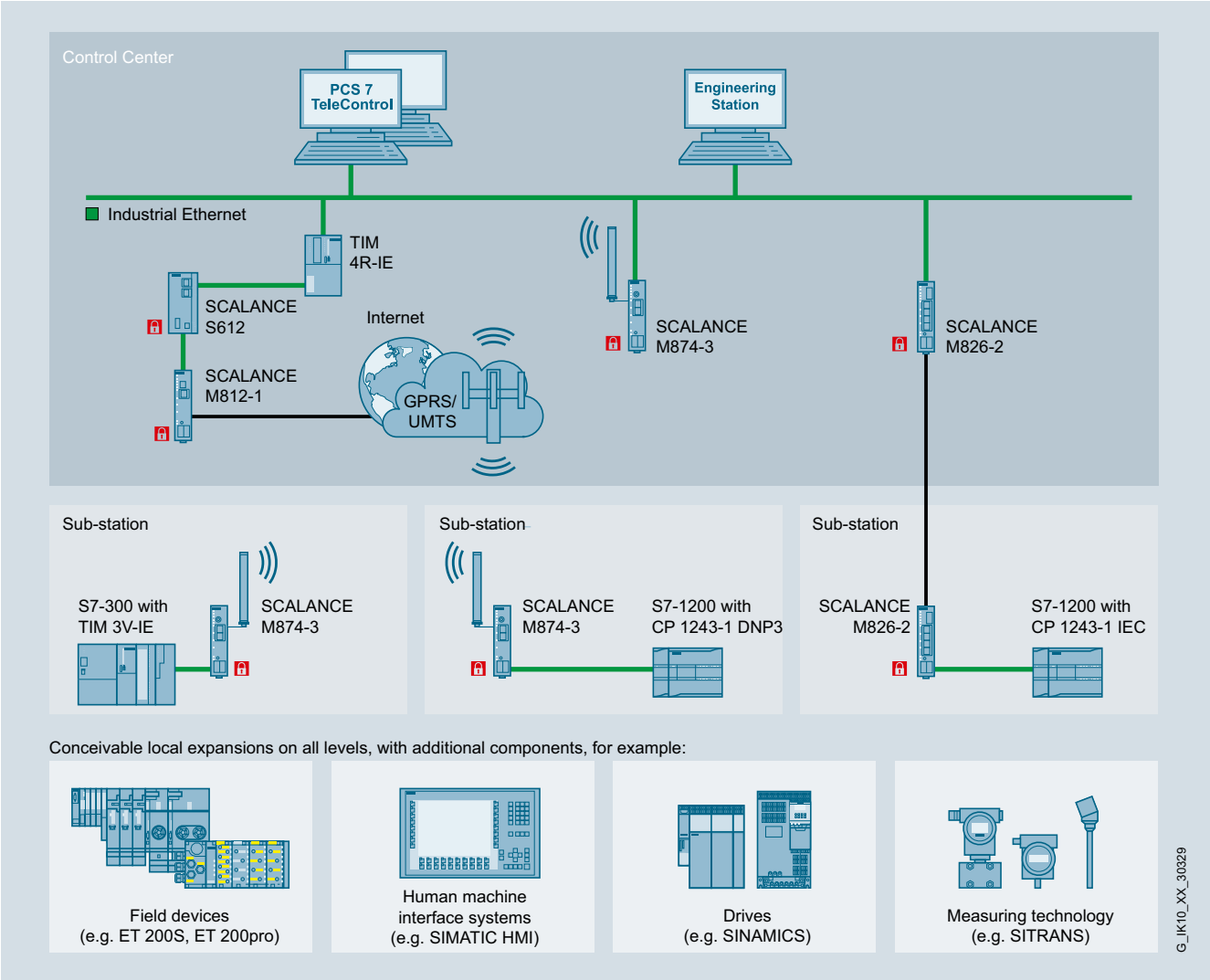

Sample configuration: TeleControl Professional

TeleControl Professional is a telecontrol system based on SIMATIC S7 (S7-1200, S7-300, S7-400, and WinCC/PCS 7) for fully-automatic monitoring and control of substations which exchange data with one or more control centers or with each other using a wide variety of WAN media.

TeleControl Professional facilitates an integrated communications concept (TIA) and complete integration into the SIMATIC environment. The modular design and the support of a huge variety of network forms and operating modes including IP-based networks permit the design of flexible network structures that can also contain redundant links.

By using all forms of transmission media (e.g. dedicated line, wireless, dial-up networks, mobile wireless, DSL), the networks can be optimally adapted to the respective local conditions.

The SINAUT Engineering Software and STEP 7 permit simple and cost-effective configuration even of highly complex networks and their extensions.

The system also supports data exchange with devices of the previous system SINAUT ST1 (based on SIMATIC S5).

© Siemens AG 2014

Benefits

get Designed for Industry

- All conventional and IP-based WAN media can be combined as required, including path redundancy
- Event-driven data transmission incl. time-stamping
- Local data storage
- Remote programming and remote diagnostics
- Integrated operator control and monitoring concept for WinCC/PCS7 or connection to non-Siemens systems via OPC

Application

The TeleControl Professional system has proven itself in the smallest plants with only a few process stations, but also in complex networks with many hundreds of stations.

Examples of the range of uses:

- Safe supply of drinking water, gas or district heating for private and industrial consumers via branched networks
- Economical transportation of gas, oil or oil products through pipelines
- Reliable recording and transmission of process data from environmental monitoring systems
- Remote monitoring of wastewater systems
- Control of beacons, unit-type district heating power stations, conveyor systems or transportation systems

Design

The TeleControl Professional system is based on the SIMATIC systems S7-1200, S7-300 and S7-400 as well as on WinCC/PCS 7. It supplements these systems with the special communications processors for S7-1200 and SINAUT components listed below, comprising hardware as well as software.

Hardware Components

- Communications processors (CPs) for S7-1200
- TIM communications modules
- MD modem modules
- Mobile wireless components (GSM/GPRS/UMTS)
- Industrial modems and routers (SCALANCE M)
- Dedicated line accessories (overvoltage protection)
- Connecting cables

Software components

SINAUT Engineering Software

- SINAUT TD7 library;
  contains blocks for the SIMATIC S7 CPU
- SINAUT configuring and diagnostics software for the programming device

Software for the central control center

- SINAUT ST7cc;
  the SINAUT add-on for WinCC
- WinCC TeleControl;
  add-on for SIMATIC WinCC for telecontrol applications
- PCS 7 TeleControl;
  add-on for SIMATIC PCS 7 for telecontrol applications
- SINAUT ST7sc;
  software for interfacing ST7 with control centers that can operate as OPC clients

Function

Network configurations and operating modes

The telecontrol components support the set-up of complete hierarchical communication networks comprising terminals, node stations and control center.

For the exchange of information between the individual devices, conventional WANs can be used, such as dedicated-line, wireless and dialup networks as well as IP-based WANs such as DSL, GPRS, UMTS, Internet, etc.

There are no restrictions on the combination of WAN types in a project. Point-to-point, line and node network topologies can be set up. Hybrid configurations of these basic structures are also possible.

A station can be linked using two transmission paths to permit redundant data transmission. The two paths can be of the same type or different, e.g. dedicated line plus GPRS, or ISDN plus wireless.

The following network topologies are possible in the WAN:

- "Point-to-point"
- "Line"
- "Star"
- "Tree"
- "Ring"

The graphics below show examples of different network topologies that can be implemented with the components listed above.

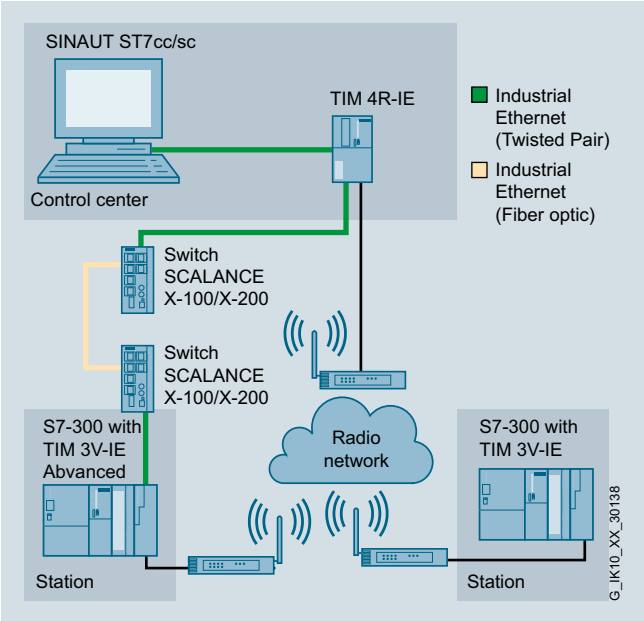

SINAUT ST7cc/sc control station with redundant WAN connection

© Siemens AG 2014

Function (continued)

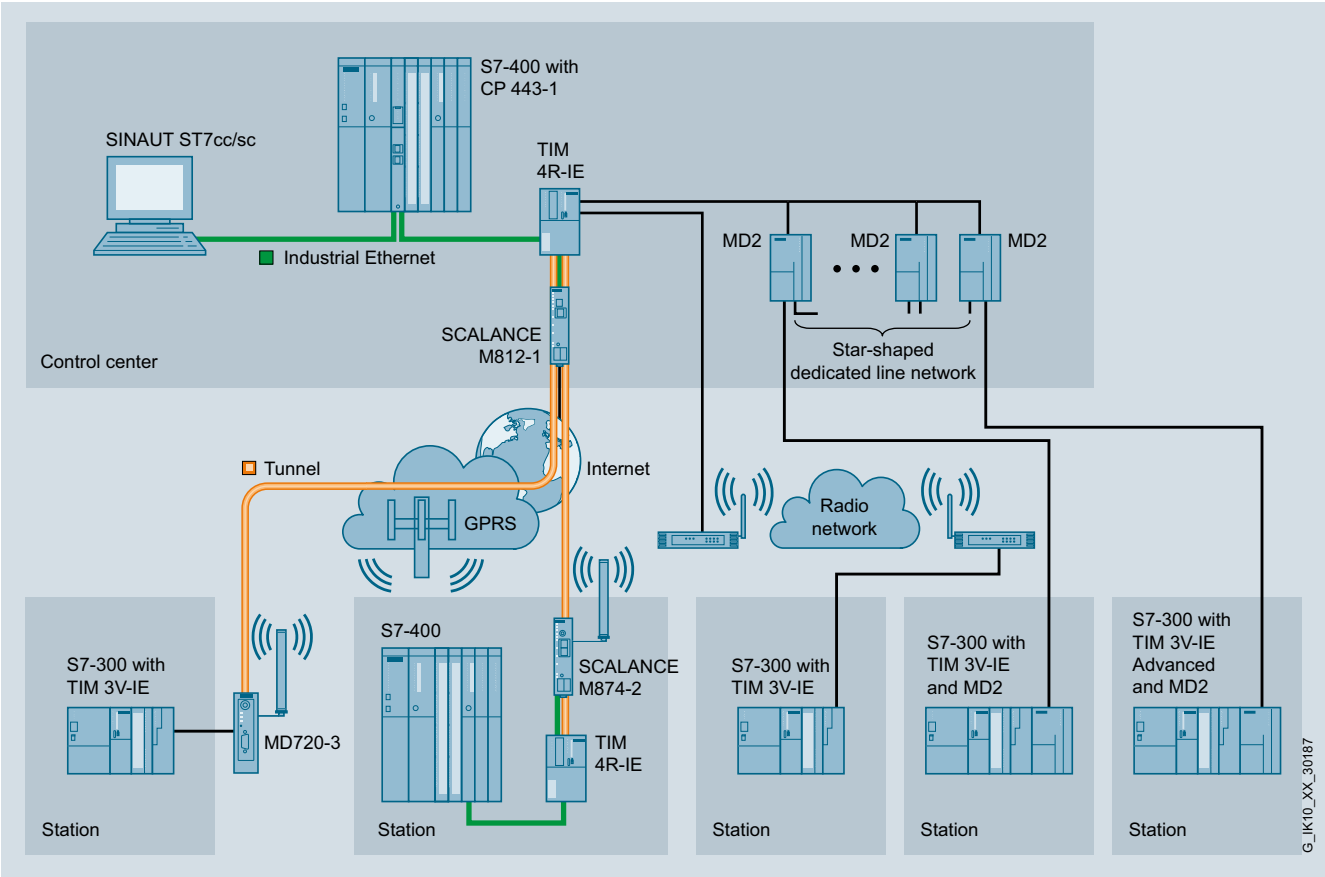

Different communication media in a SINAUT ST7 system

The control center

A number of different variants can be selected as components of the central control center:

SINAUT ST7cc;
PC control center based on WinCC;
this is the ideal control center system for both SINAUT ST7 and SINAUT ST1. It has been designed specifically for event-driven and time-stamped data transmission on the SINAUT system and can be set up as a non-redundant or redundant system (to supplement the WinCC/PCS 7 redundancy package).

PCS 7 with PCS 7 TeleControl;
this is the ideal control center system for plants in which larger local automation tasks have to be combined with telecontrol connections. In addition to SINAUT ST7, remote stations with other communication protocols can be connected, e.g. over DNP3 or IEC -60870-5-101/-104. [1)]

WinCC TeleControl;
control center system for plants with the WinCC HMI software, expanded with telecontrol connections. WinCC TeleControl offers connection of SIMATIC substations with TIM 3V-IE DNP3, TIM 4R-IE DNP3 or non-Siemens stations with DNP3 protocol, as well as telecontrol stations with IEC-60870-5-101/-104.

SINAUT ST7sc;
OPC server for interfacing control centers from other vendors via the OPC Client function;
the SINAUT telecontrol technology can also be connected to control center systems from other vendors via the "Data Access Interface". ST7sc features extensive buffer mechanisms which prevent data from being lost even if the OPC client fails.
It can be connected to non-redundant or redundant clients.

Like the substations, the control center comprises a SIMATIC S7-300 or S7-400 PLC.
This solution is suitable for simpler control centers in which only an up-to-date process image of the process data available in the stations is required. The station process control can be influenced by entering commands, setpoints or parameters. This S7-300 or S7-400 control center can also be used to extend a PC control center (SINAUT ST7cc or ST7sc), e.g. for data output on a panel and/or as an emergency operating system.

[1)] For further information, see Catalog ST PCS 7.1

© Siemens AG 2014

Function (continued)

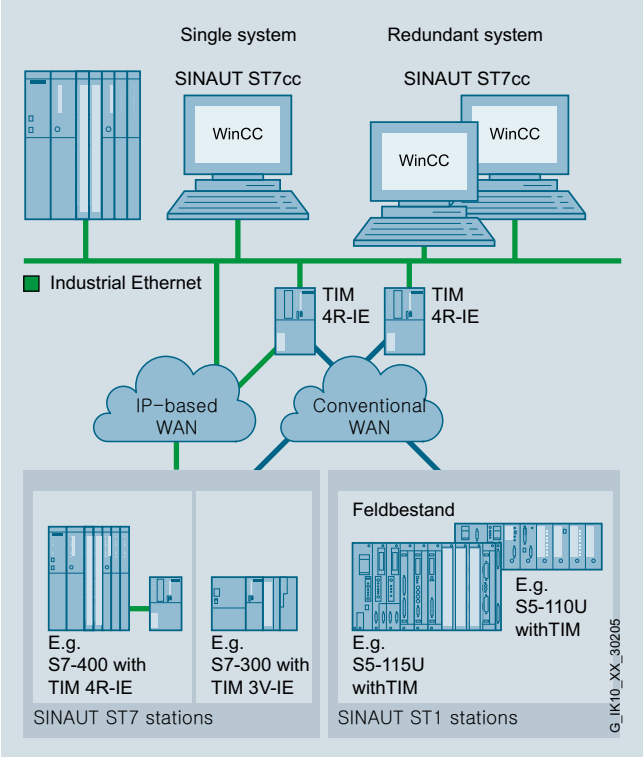

SINAUT ST7cc control center system with connected substations (RTU)

Classic WANs

The following conventional WANs can be used for data transmission:

- Copper dedicated lines, private or leased
- Private wireless networks (optionally with time slot procedure)/ TETRA
- Dial-up networks (analog/ISDN/GSM)

IP-based WANs

SINAUT communication, however, is also possible via IP-based networks:

- Wirelessly, by using special wireless systems optimized for Ethernet, e.g. the components of the SCALANCE W IWLAN system
- Via fiber-optic conductors, e.g. through use of SCALANCE X switches with optical ports; distances of up to 120 km can then be covered
- Via public networks and the Internet using DSL or GPRS/UMTS
- Copper dedicated lines, private or leased

Change-driven data transmission

In the stations, the SINAUT software ensures that process data is transmitted between CPU and control center, e.g. ST7cc, and from CPU to CPU in the event of changes. Connection, CPU or control center failures are displayed. A data update for all participating communication partners is performed automatically following debugging or startup of a CPU or of the control center.

Permanently correct time

To enable subsequent and correct archiving of process data in the control system, all data frames are already assigned a time tag at their place of origin. The entire network is synchronized automatically – including daylight saving time changeover.

Local data storage

A special property of the TIM communications module used in the SINAUT ST7 system is the capability for saving data which must not be lost in the event of a connection fault or if the partner fails. A memory capacity is provided for up to 56 000 message frames.

The memory capacity helps to save money on dial-up networks. Various priorities can be assigned to the data to be transmitted. At high priority, a dial-up connection is established immediately. At low priority, data is initially saved in the TIM. This data is transmitted on the next connection that is made with the partner for any reason, for example if an item of information with a high priority is to be transmitted, or if the partner sets up a connection in order to exchange data.

It is precisely because the TIM module can save data and transmit it at a later point in time with a time stamp that the use of a suitable control center system must be ensured. It must also be possible to continue to process this data, specifically as regards subsequent archiving, if the data is received in the control center delayed by a number of hours or even days. Also archive compressions such as the creation of mean, hourly and daily values cannot be performed until all data for the relevant period has been received. The standard SINAUT control center on the basis of WinCC, when supplemented with the SINAUT software ST7cc, is ideal for this task.

SINAUT remote programming and remote diagnostics

In industries in which SINAUT is used, the terminals are distributed across wide areas and are often situated in locations that are difficult to access. Faults which require a visit to be made to a terminal of this type are associated with long journeys. SINAUT ST7 can provide the ideal solution for such circumstances: Remote programming and diagnostics via the telecontrol network. All diagnostics and programming functions provided by SIMATIC and SINAUT for station automation and WAN communication can be used via the telecontrol path – without interrupting process data transmission.

Alarm messaging via text message

In order to alert standby service personnel, event-driven text messages can be sent to mobile phones from the CPUs.
An acknowledgment that a message of this type has been received can be sent back to the sender CPU from the mobile phone. A text message can also be output as e-mail, fax or voice mail if the mobile service provider offers these options.

© Siemens AG 2014

Integration

Protocols

SINAUT ST1 protocol

This protocol is used in the SINAUT ST1 system, which is based on the SIMATIC S5 system. However, the SINAUT ST7 system also supports this protocol. Existing SINAUT ST1 systems can be further expanded with the SINAUT ST7 system, or existing system components can be replaced with ST7 devices.

Possible operating modes:

- Polling
- Polling with time slot procedure
- Spontaneous operation (for dialup networks)

Please note that only modems/transmission devices suitable for 11-bit asynchronous characters may be used in both polling modes. However, "spontaneous" mode supports transmission with both 11-bit and 10-bit asynchronous characters.

SINAUT ST7 protocol

This protocol is a more advanced version of the ST1 protocol. It enables SINAUT communication via both conventional and IP-based WANs. In addition, the addressing options have been extended:

- Up to 10 000 stations can be addressed (maximum of 254 for ST1)
- Message frames contain a source and a target address, (ST1 messsage frames only contain a source or a target address).

The ST7 protocol also supports "PG routing", i.e. remote programming and remote diagnostics via the WAN without interrupting SINAUT data traffic. PG routing and data traffic share the available bandwidth on the transmission path; PG routing is simply allocated a higher priority.

Possible operating mode in the IP-based WAN:

- Spontaneous mode

Possible operating modes in the conventional WAN:

- Polling,
- Polling with time-slot procedure,
- Spontaneous operation (for dialup networks)

DNP3 protocol

The DNP3 protocol (Distributed Network Protocol) is a standardized telecontrol protocol, independent of any manufacturer. It enables remote communication via both conventional and IP-based WANs.

Possible operating mode in the IP-based WAN:

- Spontaneous mode

Possible operating modes in the conventional WAN:

- Polling,
- Polling with time-slot procedure,
- Spontaneous operation (for dialup networks)

IEC protocol

The IEC 60870-5-101, -103, -104 are standardized vendor-independent protocols. They enable remote communication via both conventional and IP-based WANs. For implementing an RTU with IEC 60870-5 on the basis of SIMATIC, the CP 1243-1 IEC for SIMATIC S7-1200 and the SIPLUS RIC software bundle are offered.

Possible operating mode in the IP-based WAN:

- Spontaneous mode

Modes

- In **polling** mode, data exchange is controlled from the controller. It calls the connected terminals (including node terminals) in sequence. Terminals with modified data send this data as soon as they are called. Terminals with no modified data at the present time simply acknowledge the call. Data from the CPU to the terminals can be transferred at any time between the individual calls.
  The ST7 protocol supports direct data transmission between substations. During this type of communication, data is always exchanged via the polling control center TIM.
- **Polling with time-slot procedure** mode is used on a radio network on which the use of the radio frequency assigned by the registration authorities has to be shared with other operators. Typically, each operator has six seconds per minute to exchange data with its terminals. Once this time has elapsed, the frequency must be enabled for the next operator. During the allocated time slot, this type of polling operates in the same way as standard polling.
  The ST7 protocol supports direct data transmission between substations. During this type of communication, data is always exchanged via the polling control center TIM.
  In order to exactly observe the time slot, the polling control center TIM must be directly supplied with the DCF77 or GPS time.
- **Spontaneous mode** for data exchange on dial-up networks: Different priorities (normal, high or interrupt) can be assigned to the data of the station or node station for transmission in the dial-up network. Data to be sent by the control center always have the high priority. If data with a high or alarm priority is awaiting transmission, a dial-up connection is established immediately. At normal priority, data is initially saved in the terminals. This data is transmitted on the next connection that is made with the partner for any reason, for example if an item of information with a high or alarm priority is to be transmitted, or if the partner sets up a connection in order to exchange data.
  The message frames saved in the TIM are transmitted according to the FIFO principle, i.e. in the original chronological sequence, providing they are message frames with high or normal priority. If alarm message frames are present in the TIM buffer, these are always transmitted before the other message frames.
  Direct data transmission between substations is is possible with the ST7 protocol.

© Siemens AG 2014

Integration (continued)

- **Spontaneous operation in the IP-based WAN**
  For transmission via an IP-based network, a permanent S7 connection is established in each case between two TIMs or between one TIM and the ST7cc/ST7sc. The two TIMs or the TIM and ST7cc/ST7sc exchange the data packages specific to SINAUT ST7 with application of the TCP/IP transport protocol. The transmission is performed with the resources of the S7 communication, in which the processing of the spontaneous data exchange depends on whether the transmitted volume of data is chargeable or not in the IP-based network.
  Networks without volume tariff:
  When data is transmitted, it is transferred immediately to the respective partner regardless of any priority.
  Data is transferred in accordance with the FIFO principle. This does not apply to message frames with "interrupt" priority. These are transferred before any other message frames that are available in the buffer.
  Networks with volume tariff:
  In an IP-based network such as the GPRS network, the priority of the individual data frames (normal, high or interrupt) is taken into consideration, as in the case of a dialup network. Data with normal priority is collected and transmitted in larger blocks, as soon as a specific size of block is achieved or, at the latest, when the specified TCP/IP Keep-alive interval has expired. This saves transmission volume because a reduced message frame overhead and fewer acknowledgment message frames are required. Important data with high or interrupt priority is transmitted immediately. Normal message frames that are buffered at this point are sent at the same time. Message frames with normal or high priority are transmitted in accordance with the FIFO principle.

Network configurations and topologies

All networks and all transmission media can be combined in any way in a telecontrol project – both with each other in "node structures", as well as in parallel in star topologies or in redundant configurations.

The graphics below show a selection of different topologies that can be implemented with the telecontrol components.

Basic topologies

Differently structured telecontrol networks can be implemented in the wide area network (WAN) based on the following four basic topologies.

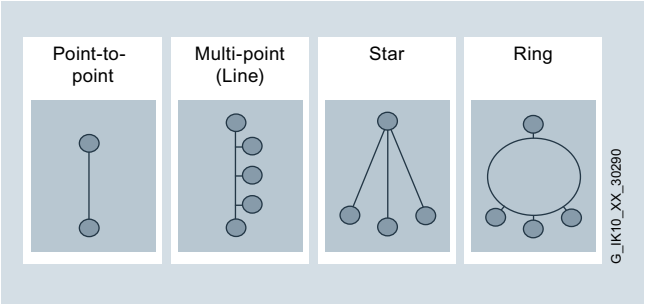

Media versions

Depending on the support provided by the selected telecontrol protocol, various transmission media are available for these basic topologies, for example, dedicated line, private wireless networks, mobile wireless networks, dial-up networks (wireless/landline), DSL over Internet.

Some of these media versions are shown in the example of the star topology.

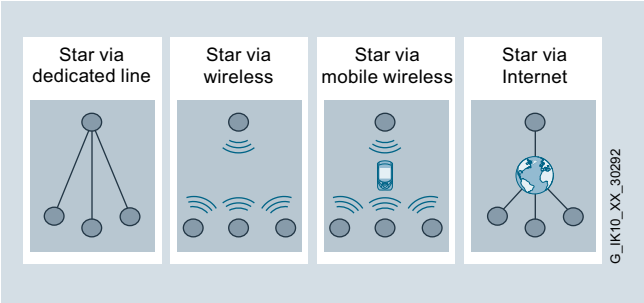

Combinations of basic topologies and media versions

Through a combination of several basic topologies of the same or different media versions, it is additionally possible to design more complex network topologies, even with redundant communication paths. This allows optimum adaptation to process requirements and to the existing infrastructure.

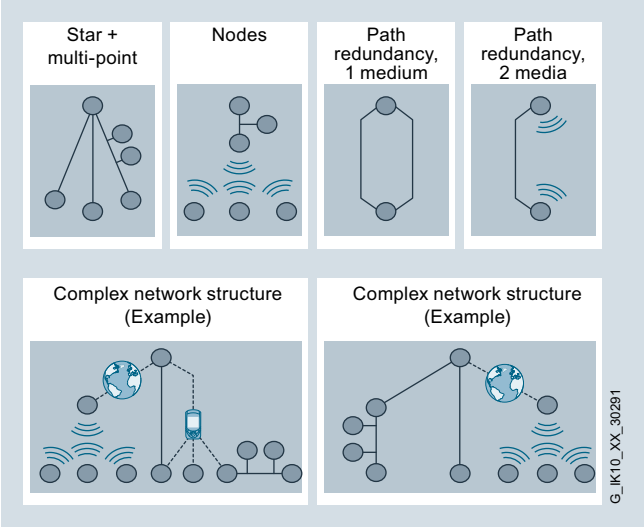

More information

You can find more information on the Internet at:
http://www.siemens.com/telecontrol

© Siemens AG 2014

Overview

Design principle of a telecontrol system and plants with SIMATIC

Telecontrol involves the connection of distant process stations to one or more central control systems. A telecontrol system can be subdivided into the following components:

- The service or control center
- The communication network
- The substations

Various different public or private networks can be used for communication for the purposes of monitoring and control. The event-controlled or cyclic exchange of the process data takes place via special telecontrol protocols such as SINAUT ST1, SINAUT ST7, DNP3 or IEC 60870-5-101/-104.

The control center

A number of different variants can be selected as components of the central control center:

SINAUT ST7cc;
PC control center based on WinCC;
this is the ideal control center system for both SINAUT ST7 and SINAUT ST1. It has been designed specifically for event-driven and time-stamped data transmission on the SINAUT system and can be set up as a non-redundant or redundant system (to supplement the WinCC redundancy package).

Control station software	Telecontrol protocols						
	IP T (IP-Telemetry)	ST7	DNP3	Modbus	IEC 60870-5-101	IEC 60870-5-104	IEC 61850
PCS 7 TeleControl	–	●	●	●	●	●	
PCS 7 PowerControl	–	–	–	–	–	–	●
WinCC 7 TeleControl	–	●	●	–	●	●	–
WinCC ST7cc	–	●	–	–	–	–	–
WinCC OA	–	–	●	●	●	●	–
SCADA with ST7sc	–	●	–	–	–	–	–
SCADA with TeleControl Server Basic	●	–	–	–	–	–	–
Third-party SCADA	–	–	●	●	●	●	●

G_IK10_XX_30327

© Siemens AG 2014

Overview (continued)

PCS 7 with PCS 7 TeleControl;
this is the ideal control center system for plants in which larger local automation tasks have to be connected to telecontrol interfaces. In addition to SINAUT ST7, remote stations with other communication protocols can be connected, e.g. over DNP3 or IEC 60870-5-101/-104.

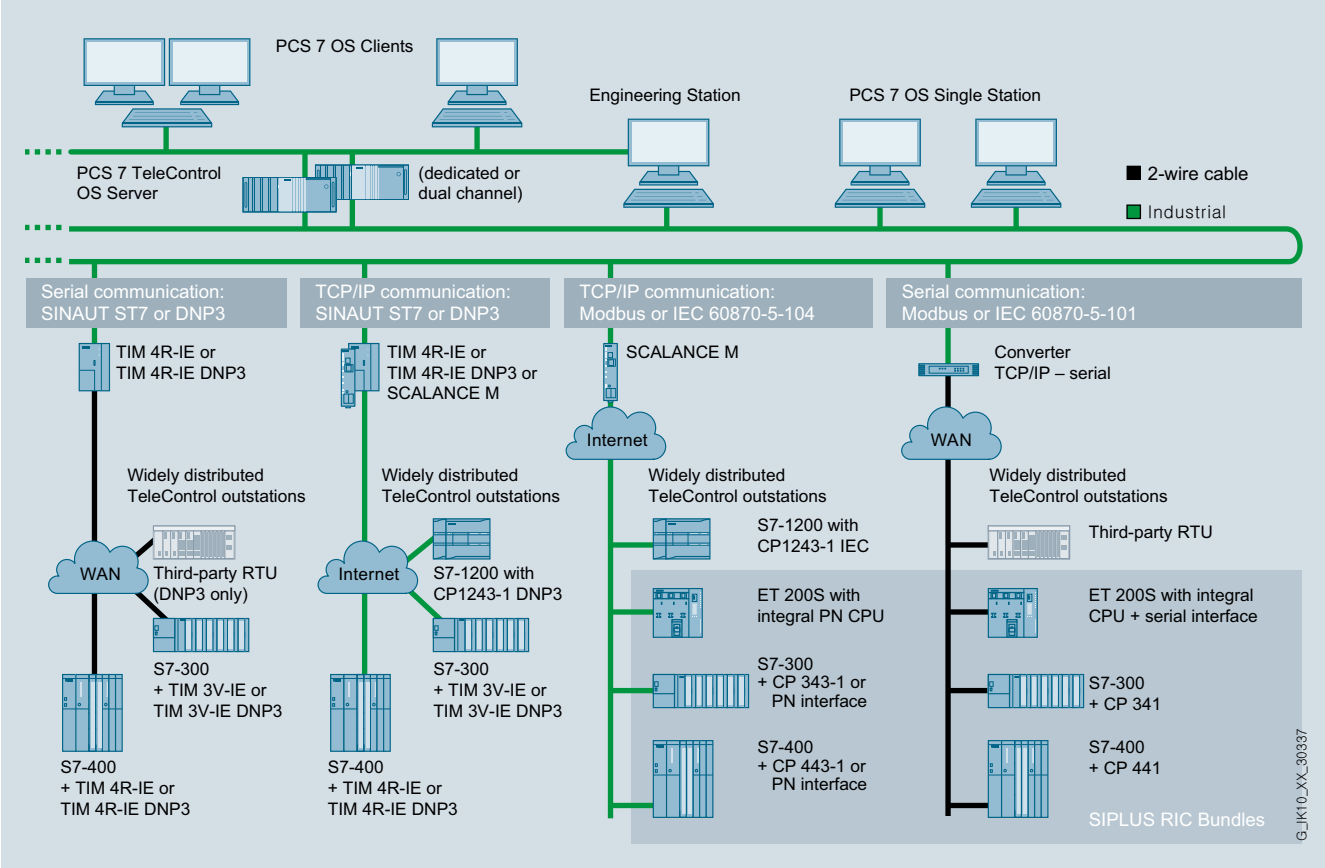

WinCC TeleControl;
control center system for plants with the WinCC HMI software, expanded with telecontrol connections. WinCC TeleControl offer connection of SIMATIC substations with TIM 3V-IE DNP3, TIM 4R-IE DNP3 or non-Siemens stations with DNP3 protocol, as well as telecontrol stations with IEC 60870-5-101/-104.

SINAUT ST7sc;
OPC server for interfacing control centers from other vendors via the OPC Client function;
the SINAUT telecontrol technology can also be connected to control center systems from other vendors via the "Data Access Interface". ST7sc features extensive buffer mechanisms which prevent data from being lost even if the OPC client fails. It can be connected to non-redundant or redundant clients.

SIMATIC S7 PLC as control center

Like the substations, the control center comprises a SIMATIC S7-300 or S7-400 PLC. This solution is suitable for simpler control centers in which only an up-to-date process image of the process data available in the stations is required. The station process control can be influenced by entering commands, setpoints or parameters. This S7-300 or S7-400 control center can also be used to extend a PC control center (SINAUT ST7cc or ST7sc), e.g. for data output on a panel and/or as an emergency operating system.

© Siemens AG 2014

Application

The SINAUT engineering software with the following components is required for configuring, diagnosing and operating a telecontrol system with the ST7 or DNP3 protocol:

- SINAUT ST7 configuration and diagnostics software
- SINAUT TD7 Library

The software package is a work package which can be used for any number of SINAUT projects without a licensing process.

Apart from ST1 and ST7 connections, the SINAUT ST7 engineering software Version V5.1 or higher also supports the DNP3-compliant TIM modules TIM 3V-IE DNP3 and TIM 4R-IE DNP3. The current version V5.4 is released for STEP 7 V5.5 incl. SP2.

Function

SINAUT ST7 configuration and diagnostics software for STEP 7

- Executable under Windows 7, Windows Server 2008, Windows Server 2008 R2, Windows XP SP3, Windows Server 2003 R2 SP2;
  a STEP 7 software must also be installed.
- Includes:
  - Module manager to supplement the HW Config STEP 7 tool; it displays and sets the parameters of the TIM modules in HW Config.
  - WAN Manager to supplement the NetPro STEP 7 tool; it displays and sets the parameters of the SINAUT WAN networks and network nodes in NetPro
  - The SINAUT ST7 configuration software is used for project-wide functions such as SINAUT connection configuration and SINAUT station management
  - SINAUT ST7 diagnostics and service tool; in addition to the diagnostics functions familiar to users of STEP 7, it also provides access to SINAUT-specific diagnostic information. The service tool can be used, for example, to upload new software to the TIM.

Module manager for SINAUT systems

A SINAUT ST7 folder is added to the SIMATIC 300 directory. This folder contains a list of all available TIM modules. The TIM module required in each case can be selected from this directory and installed in the S7 rack. A corresponding Properties dialog box can be called up to set the module parameters.

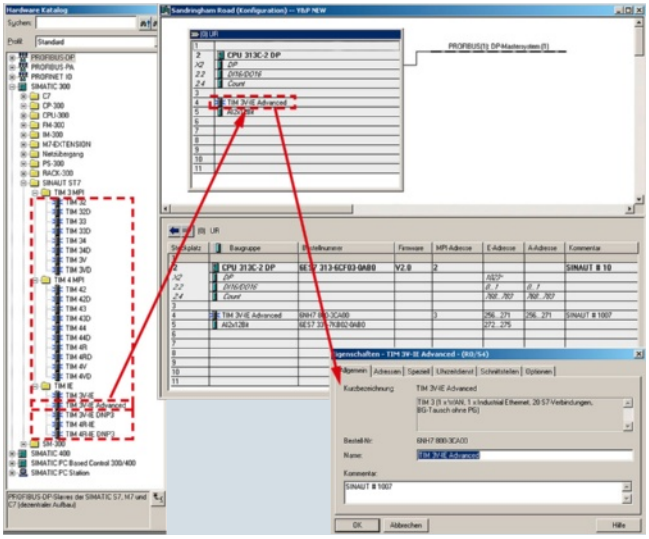

WAN Manager for SINAUT systems

In the catalog for the STEP 7 network configuration tool NetPro, the SINAUT "dedicated line" and "dial-up" networks are added to the "Subnets" directory. The SINAUT networks required in each case can be selected from this directory and installed in the NetPro window. With the SINAUT ST7 engineering software V5.0 and higher, the MSC-VPN tunnel protocol can also be used under the "Industrial Ethernet" network type for configuring the SINAUT data transmission via the Internet and GPRS.

The TIM modules can be assigned to these networks using the mouse or dialog boxes. Any erroneous connections are rejected immediately.

A corresponding Properties dialog box is called up to define the generally valid parameters for a network, e.g. ST7 or DNP3 protocol, transmission rate, etc.

The individual properties for each of the network nodes can be defined in a further dialog box, e.g. the dedicated telephone number for the connection to a dialup network.

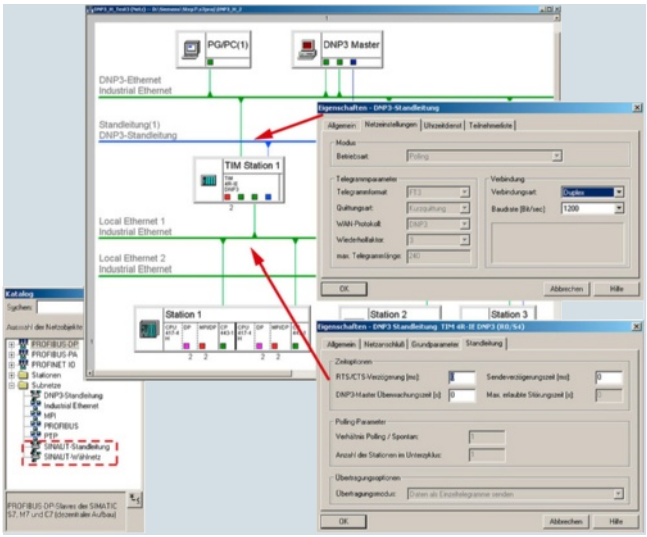

If necessary, the Properties dialog box for a TIM module can be opened in NetPro with the same property options as in HW Config.

© Siemens AG 2014

Function (continued)

SINAUT ST7 configuration software

The SINAUT ST7 configuration software is an independent configuration tool for the telecontrol system that can comprise ST1, ST7 or DNP3 modules; it includes:

- Connection configuration
- Station management
- SINAUT ST1 configuration overview

First, the "Connection configuration" tool is used to define the SINAUT stations (ST7 CPU, DNP3, ST7cc, ST7sc or ST1 device) between which a connection is required. For this purpose, the tool displays a list of all connections possible in the right-hand side of a two-section window. The tool has generated the list automatically using the network configured with NetPro (see WAN Manager for SINAUT systems). The user moves the connections actually required from the right-hand to the left-hand window using the pop-up menu.

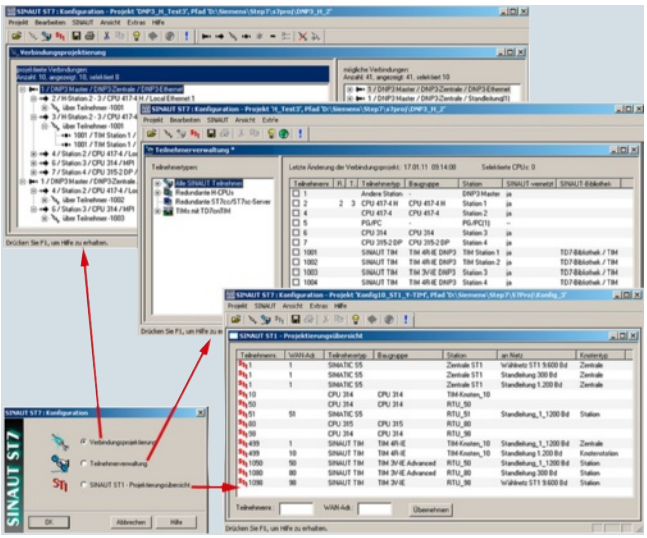

One of the features provided by the "Station management" tool is a list of all SINAUT devices. If necessary, station-specific modifications can be made, e.g. the SINAUT station numbers can be changed for the individual devices, or message texts can be configured to be sent as text messages. The station management tool also handles configuring of the data frames to be sent and received if frame generation and evaluation are to be carried out by the TIM (only possible for TIMs with TD7onTIM functionality). The tool generates the system data blocks (SDB) for the CPUs and TIMs from the configuration data. If the SINAUT TD7 software is used for the CPU, the tool also preprocesses the accounting and communication data blocks for the CPUs, which it stores in the CPU block library together with the blocks (FBs, FCs) which are essential to the CPUs for SINAUT communication.

The third tool, "SINAUT ST1 – Configuration overview" is only required for configuring systems which also feature SINAUT ST1 devices. This tool makes adjusting the addresses for SINAUT ST1 much easier.

SINAUT ST7 diagnostics and service tool

In addition to the diagnostics functions familiar to users of STEP 7, the SINAUT ST7 diagnostics and service tool also provides access to SINAUT-specific diagnostic information. The service tool can be used, for example, to upload new software to the TIM.

SINAUT TD7 library, blocks for the CPU

The SINAUT TD7 library is a software package with blocks for the CPU (TD7onCPU), in which TD7onCPU can be used for ST1 and ST7 systems, but not for DNP3 systems. The package has been designed so that it can run both on an S7-400 and on an S7-300 CPU. Only a small number of blocks have been designed specifically for the S7-300 or S7-400 CPU respectively.

In the stations, the SINAUT TD7 software ensures that process data is transmitted between CPU and control console, e.g. ST7cc, and from CPU to CPU in the event of changes. Connection, CPU or control center failures are displayed. A data update for all participating communication partners is performed automatically following debugging or startup of a CPU or of the control desk. A time stamp can be assigned to data messge frames if required.

The package essentially comprises:

Basic and auxiliary blocks
Most of these blocks are always required in the CPU, a small number are optional. The basic blocks handle central tasks such as startup, monitoring of connections and connection partners, general requests, time management, handling communication etc. The auxiliary blocks enter data frames, for example, in the send buffer or fetch them from the receive buffer, handle send and receive jobs for specific connections, or provide information as a result of searches.

Data-point typicals
These blocks are integrated into the CPU program on the basis of the data types and data volumes to be transmitted. In the event of changes to data, they create message frames or output received process data.

In order to operate correctly, the TD7onCPU package needs a number of data blocks which are generated by the SINAUT engineering software. These are:

Central accounting DB
This block contains all data required centrally, e.g. accounting data for all communication partners as well as for all connections to be managed.

Communication DBs
A separate communication DB is created for every connection with a sending and receive mailbox and all data required for controlling and monitoring this connection.

© Siemens AG 2014

Technical specifications

	SINAUT Engineering Software V5.4
Operating systems	MS Windows 7 Professional, Ultimate (32-bit) MS Windows 7 Professional, Ultimate (64-bit) MS Windows Server 2008 (32-bit) MS Windows Server 2008 R2 Standard Edition (64-bit) MS Windows XP SP3 MS Windows Server 2003 R2 SP2
STEP 7 versions	STEP 7 V5.5 incl. SP2/SP3

Ordering data

	Article No.
SINAUT Engineering Software V5.4 On CD-ROM, comprising • SINAUT Engineering Software V5.3 for the programming device • SINAUT TD7 block library • Electronic manual in German and English	**6NH7997-0CA54-0AA0**
SINAUT Engineering Software V5.4: Upgrade from V5.0, V5.1, V5.2 or V5.3 For adding functional expansions; the functional expansions are for transferring larger data quantities of 1 KB and SMS functionality in GPRS mode	**6NH7997-0CA54-0GA0**
SINAUT ST7 Engineering Software V5.0 Edition 09/2009 (Upgrade) for STEP 7 V5.4 SP4, for owners of older versions of SINAUT ST7 engineering software	**6NH7997-0CA50-0GA0**

© Siemens AG 2014

Overview

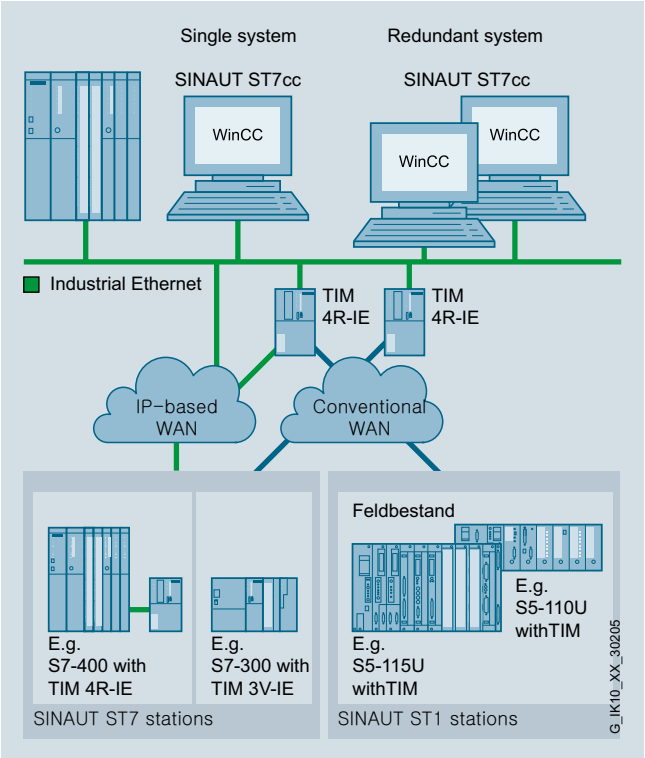

SINAUT ST7cc control center system (single or redundant) with connected ST7 and ST1 stations

Based on SIMATIC WinCC, SINAUT ST7cc is the ideal control center system for both SINAUT ST7 and SINAUT ST1. It has been developed specifically for event-driven and time-stamped data transmission on the SINAUT telecontrol system.

A fault-tolerant ST7cc control center can be set up in conjunction with the WinCC redundancy package.

SINAUT ST7cc additionally assumes the function of a telecontrol center. There is therefore no need for a separate SIMATIC S7-CPU for this function.

Benefits

get Designed for Industry

- Interfacing of SIMATIC S7 substations to SIMATIC WinCC via conventional and IP-based telecommunications network
- Entry of messages, analog and count values in WinCC archive using the event times supplied by the substations
- Protection of investments in existing SINAUT ST1 systems, as ST1 stations can be connected
- Saving of time and reduction of costs through simple configuration without requiring detailed knowledge of SINAUT

Application

Based on SIMATIC WinCC, SINAUT ST7cc is the ideal control center system for both SINAUT ST7 and SINAUT ST1.

It has been developed specifically for event-driven and time-stamped data transmission on the telecontrol system. It avoids the possible loss of data inherent during cyclic polling in WinCC. It also ensures the use of the correct event times supplied by the substations for all messages and archive entries. The process image integrated into ST7cc contains all process data along with the status of all SINAUT stations in the network, and makes this data available directly to WinCC for high-speed process image visualization.

ST7ccConfig provides the user with an integrated configuring tool based on the data telegrams configured in the SINAUT ST7 or ST1 terminals. The WinCC tags are configured automatically and updated consistently to reflect any changes.

The additional use of the WinCC add-on ACRON is recommended for archives, protocols and reports in accordance with ATV Notice H260 or Hirthammer.

The Alarm Control Center software package is useful for alerting service personnel via text message, fax, e-mail or voice mail and is also available as a WinCC add-on.

A fault-tolerant ST7cc control center can be set up in conjunction with the WinCC redundancy package.

© Siemens AG 2014

Design

SINAUT ST7cc is installed on a Windows PC. WinCC can also run on the same PC. However, client/server configurations are also possible, in which the ST7cc is located on the WinCC server.

The following software packages and licenses are required for an ST7cc control center that is configured as a single-channel or redundant system with WinCC. A license for the WinCC complete package is required. A runtime package may be sufficient if no configurations are required on the end computer. The WinCC redundancy package incl. license is also required for the redundant ST7cc.

The table below lists the software packages required for the ST7cc non-redundant/redundant system in detail.

ST7cc non-redundant system		ST7cc redundant system	
Number	**Software package**	**Number**	**Software package**
1	WinCC complete package [1]	1	WinCC complete package [1]
–	–	1	WinCC runtime package
–	–	1	WinCC redundancy package (with 2 licenses)
1	SIMATIC NET SOFTNET for IE license for CP software	2	SIMATIC NET SOFTNET for IE license for CP software
–	–	1	ST7cc redundancy package (with 2 licenses)
1	SW ST7cc S (with license for 6 stations)	2	SW ST7cc S (with license for 6 stations)
	or		or
	SW ST7cc M (with license for 12 stations)		SW ST7cc M (with license for 12 stations)
	or		or
	SW ST7cc L (with license for > 12 stations)		SW ST7cc L (with license for > 12 stations)

[1] A runtime package may be sufficient if no configurations are required on the end computer.

One or several SINAUT ST7 TIM communications processors are connected to the ST7cc PC depending on the TIM type used either via the MPI bus or via Ethernet. Both ST7 and ST1 terminals can be connected to the TIMs, only ST7 terminals to the TIMs on the Ethernet.

Provision of current time of day:

- Time synchronization for TIMs connected via MPI to the ST7cc PC is only possible using a TIM equipped with a DCF77 receiver. This is then responsible for central synchronization of the ST7cc PC and all terminals.
- Time synchronization for TIMs connected via Ethernet to the ST7cc PC is via ST7cc.

Outside the reception area of the DCF77 real-time transmitter the use of a GPS receiver is recommended. This determines the local time from the satellite-based global positioning system (GPS).

Function

Functioning as a remote control center with convenient diagnostic functions

- Direct connection of SINAUT ST7 TIMs over MPI and Ethernet to ST7cc. A separate series-connected S7-300 or S7-400 controller is not required as a central remote control center.
- Provision of the most important status information for each SINAUT ST7 or ST1 station with visualization in WinCC using supplied station typicals (display typicals and faceplates).
- Control possibilities for the SINAUT stations over these faceplates.
- Tagging the process values from stations with an interrupted connection to ST7cc.
- General scanning of affected stations following the end of a transmission fault for updating the process image in ST7cc.
- For diagnostic purposes: Selective activation of recording of the message traffic for individual or all SINAUT stations. Message frame visualization and evaluation is performed in the same manner as by the TIM message frame monitor.
- Time synchronization by ST7cc for the TIMs that are connected to the ST7cc PC over Ethernet.

Preprocessing of process data

Preprocessing can be configured for binary values, analog values, and count values. They take into account the event time points and tag derived alarms and archive entries with correct time stamps.

- **Binary values**
  - Entry of current binary values into the assigned WinCC tags taking into account the time stamps supplied by SINAUT ST7 or ST1.
- **Analog values** (current and average values)
  - Floating-point numbers, integer values
  - Linear raw value conversion (raw value → physical value)
  - Entry of analog values (with or without linear raw value adaptation) in the associated WinCC tags
  - Entry of analog values (with or without linear raw value adaptation) into the WinCC archive taking into account the time stamps supplied by SINAUT ST7 or ST1.
- **Count values**
  - Overflow handling in the case of absolute counters.
  - Count value conversion using factors
  - Generation of correct interval times
  - Entry of currently accumulating interval quantities in the assigned WinCC tags.
  - Entry of complete interval quantities into the WinCC archive taking into account the time stamps supplied by SINAUT ST7 or ST1.
- **Setpoints**
  - Floating-point numbers, integer values
  - Linear raw value conversion (physical value → raw value) if required.

Simple, integrated configuring

Configuration of the overall system with ST7ccConfig is very user friendly. A separate WinCC configuration for tag management, archive and alarm system is limited to a few preparatory measures, such as the creation of archives and, in the case of WinCC, the definition of alarm classes and types.

© Siemens AG 2014

Technical specifications

	SINAUT ST7cc V3.1
Operating systems	Windows XP SP3; Windows Server 2003 SP2; Windows 7 SP1 (32-bit/64-bit); Windows Server 2008 SP2 (32-bit); Windows Server 2008 R2 SP1 (64-bit)
WinCC versions	SIMATIC WinCC 6.2 SP3; SIMATIC WinCC 7.0 SP2; SIMATIC WinCC 7.0 SP3 and SIMATIC WinCC V7.2 (V3.1 + SP1 or higher)
VMware	ESXi V5.0 (V3.1 + SP1 or higher)

	SINAUT ST7cc V3.1
Configuration	
• ST7cc	ST7cc Config-Tool V3.1
• SINAUT system	SINAUT Engineering software
Quantity framework	
• 6 SINAUT terminals	**S**mall license
• 12 SINAUT terminals	**M**edium license
• for more than 12 SINAUT terminals	**L**arge license

Ordering data

	Article No.
SINAUT ST7cc	
Software for connecting SINAUT stations to WinCC; Single license for 1 installation of the runtime software; configuration software and electronic manual on CD-ROM, 2 languages (German, English); operating systems: Windows XP SP3, Windows Server 2003 SP2, Windows 7 SP1 (32-bit/64-bit), Windows Server 2008 SP2 (32-bit), Windows Server 2008 R2 SP1 (64-bit); license key on USB flash drive; German/English	
Standard licenses S (Small), M (Medium), L (Large)	
ST7cc V3.1 **S** Small license for max. 6 SINAUT stations	**6NH7997-7CA31-0AA1**
ST7cc V3.1 **M** Medium license for max. 12 SINAUT stations	**6NH7997-7CA31-0AA2**
ST7cc V3.1 **L** Large license for more than 12 SINAUT stations	**6NH7997-7CA31-0AA3**
ST7cc V3.1 RED Redundancy license for ST7cc (contains 2 licenses), two single ST7cc S, M or L licenses are also required	**6NH7997-8CA31-0AA0**
PowerPacks for upgrading the license to M or L	
ST7cc V3.1 **SM PowerPack** License upgrade from ST7cc S to ST7cc M (from 6 to 12 stations)	**6NH7997-7AA31-0AD2**
ST7cc V3.1 **SL PowerPack** License upgrade from ST7cc S to ST7cc L (from 6 to more than 12 stations)	**6NH7997-7AA31-0AD3**
ST7cc V3.1 **ML PowerPack** License upgrade from ST7cc M to ST7cc L (from 12 to more than 12 stations)	**6NH7997-7AA31-0AE3**

	Article No.
Upgrade packages	
ST7cc V3.1 **Upgrade from V3.0 to V3.1** Upgrade of all licenses V3.0	**6NH7997-7CA31-0GA1**
ST7cc V3.1 RED **upgrade from V3.0 to V3.1** Upgrade of the redundancy license V3.0	**6NH7997-8CA31-0GA0**
ST7cc V3.1 S **upgrade from V2.4 … V2.7 to V3.1** for S license holders	**6NH7997-7CA31-2GA1**
ST7cc V3.1 M **upgrade from V2.4 … V2.7 to V3.1** for M or SM license holders	**6NH7997-7CA31-2GA2**
ST7cc V3.1 L **upgrade from V2.4 … V2.7 to V3.1** for L, SL or ML license holders	**6NH7997-7CA31-2GA3**
ST7cc V3.1 RED upgrade **from V2.4 … V2.7 to V3.1** Upgrade of the redundancy licenses V2.4 … V2.7	**6NH7997-8CA31-2GA0**
Accessories	
TIM 3V-IE communications module With an RS 232 interface for SINAUT communication via a conventional WAN or an IP-based network (WAN or LAN)	**6NH7800-3BA00**
TIM 3V-IE Advanced communications module With an RS 232 interface and an RJ45 interface for SINAUT communication via a conventional WAN and an IP-based network (WAN or LAN)	**6NH7800-3CA00**
TIM 4R-IE communications module With two combined RS 232/RS 485 interfaces for SINAUT communication via conventional WANs and two RJ45 interfaces for SINAUT communication via IP-based networks (WAN or LAN)	**6NH7800-4BA00**

© Siemens AG 2014

Overview

WinCC/TeleControl for WinCC V7.0 SP2 supports connection to outlying stations (Remote Terminal Units = RTUs) via telecontrol protocols.

Benefits

WinCC/TeleControl for WinCC V7.0 SP2 cannot only integrate newly configured RTUs, it can also integrate units which already exist in outlying areas by means of DNP3 or IEC 870-5-101/104 drivers.

For communication with the outstations, WinCC/TeleControl for WinCC V7.0 SP2 uses the SINAUT ST7 and DNP3 protocols (both via serial and TCP/IP communication connections) as well as IEC 870-5-101 (serial) and IEC 870-5-104 (Ethernet TCP/IP).

The serial RTU link is possible via the following components, which can be connected directly via WinCC (single station or server):

- SINAUT TIM communication modules (SINAUT ST7 telecontrol protocol)
- TCP/IP serial converter (telecontrol protocols DNP3, Modbus (not released for WinCC TC), IEC 870-5-101)

Equipment from MOXA or Lantronix, for example, can be used as TCP/IP serial converters.

By means of Ethernet TCP/IP, the RTUs can be connected directly or via TCP/IP WAN routers to the SIMATIC WinCC system bus (SINAUT ST7, DNP3, IEC 870-5-104 telecontrol protocols). When using the SINAUT ST7 telecontrol protocol, the SINAUT TIM communication module can be used in addition to the TCP/IP WAN router or as an alternative.

Application

Telecontrol communication over the wide area network is largely determined by the communication infrastructure which already exists. Various transmission media such as dedicated line, analog or digital telephone networks, wireless networks (GSM or private), DSL or GPRS can also be combined with each other.

SINAUT ST7 telecontrol protocol

Detailed information for implementing telecontrol applications with the SINAUT ST 7 telecontrol protocol via the Industry Mall.

IEC 870-5-101/-104 telecontrol protocols

Detailed information for implementing telecontrol applications with the IEC 870-5-101/-104 telecontrol protocols via the Industry Mall.

DNP3 telecontrol protocol

WinCC/TeleControl for WinCC V7.0 SP2 also supports the DNP3 telecontrol protocol. Widely distributed outstations (RTUs) can be controlled and monitored with the DNP3 telecontrol protocol via serial or Ethernet TCP/IP communication links by means of the telecontrol center in SIMATIC WinCC. The control center integrated with SIMATIC WinCC TeleControl into the SCADA system is the master during telecontrol communication.
The slaves are represented by the outstations. SIMATIC S7-300/S7-300F and S7-400/S7-400F/S7-400H/S7-400FH controllers as well as third-party RTUs can be used as outstations.

Further hardware and software components round off the range of products:

- TIM communication modules
- TCP/IP converters – serial and MD modem modules
- GSM/GPRS components
- TCP/IP routers and switches
- SCALANCE S612 and S613 security modules
- Dedicated-line accessories
- Cables
- Engineering package for configuration of DNP3 data objects, stations, networks and connections as well as for diagnostics

In order to implement telecontrol networks, basic topologies including point-to-point, multi-point, star and ring can be configured using classic or TCP/IP-based media. These can be combined flexibly independent from existing infrastructure.

Classic WAN media:

- Dedicated line via modem, e.g. SINAUT MD2
- Private wireless networks
- Analog telephone network
- Digital ISDN network
- Mobile radio network GSM

TCP/IP-based WAN media:

- Ethernet networks, e.g. SCALANCE X with fiber-optic cables
- Industrial Wireless LAN with SCALANCE W
- Public networks and the Internet using DSL and/or GPRS

© Siemens AG 2014

Function

Special characteristics of DNP3 communication

- Change-driven data transmission
  - Change-driven transmission of process data between RTU and control center
  - Signaling of RTU, control center or connection failure
  - Automatic data updating for all communication partners involved following troubleshooting and following the startup of the RTU or control center
- Chronological processing of process data
  - Time tagging of all data frames at the place of origin allows process data to be archived by the process control system in the correct chronological order
  - The time of the DNP3 stations in the WAN can be synchronized via SIMATIC WinCC (including summertime/wintertime switchover)
- Local data storage
  - The TIM communication module can temporarily store (for several hours or even days) message frames should the connection or the communication partner fail
  - Intermediate storage of message frames of lower priority in the case of priority-controlled data transmission (with dial-up networks or quantity-dependent data transmission costs)

Operating modes

The DNP3 telecontrol protocol supports the following operating modes:

- Polling
- Polling with time slot procedure
- Multi-master polling with time slot procedure
- Spontaneous mode in dial-up networks
- Spontaneous mode in the TCP/IP-based WAN

Integration

Integration of WinCC/TeleControl for WinCC V7.0 SP2 into the WinCC SCADA system offers particular advantages for the water and waste water sectors, as well as oil and gas sectors, especially in the case of the following types of plant:

- Freshwater treatment and distribution
- Wastewater treatment plants
- Oil and gas pipelines and water pipes
- Oil and gas drilling fields and the associated treatment plants

In these types of plant, remote outstations such as pumping stations, valve stations or automated stations for wellheads must be integrated.

Through the support of communication protocols for RTUs such as SINAUT ST7, WinCC/TeleControl for WinCC V7.0 SP2 supports the following advanced communication concepts:

- Reduction in the transferred data volume by means of event-controlled communication mechanisms for alarm and measured value information.
- Time-synchronization of RTUs and correct time stamping of all data in the RTU.
- Tolerance of lower bandwidth, high latency or lack of reliability of communication lines
- Prevention of data loss due to communications failure through data backup in the RTU
- Support of communication media with serial interface (dedicated lines, dial-up connections over analog telephone lines and ISDN lines), various radio devices (standard, spread spectrum modulation), microwave and GSM
- Support for TCP/IP-based WANs (Wide Area Networks) such as DSL, GPRS or Ethernet radio networks
- Support for redundant communication connections
- Expanded communication diagnostics functions for RTU communication links
- Remote programming of RTUs
- Support for different communication topologies – Point-to-point, multidrop (multistation mode) and hierarchic network structures
- High quality server redundancy scheme without data loss in the case of server failure

Through the support of communication protocols for RTUs such as IEC 60870-5 and DNP3, SIMATIC TeleControl for WinCC V7.0 SP2 supports the following advanced communication concepts:

- Reduction in the transferred data volume by means of event-controlled communication mechanisms for alarm and measured value information.
- Time synchronization of RTUs and correct time stamping of all data in the RTU.
- Tolerance of lower bandwidth, high latency or lack of reliability of communication lines
- Prevention of data loss due to communications failure through data backup in the RTU (not all non-Siemens RTUs support this)
- Support of communication media with serial interface (dedicated lines, dial-up connections over analog telephone lines and ISDN lines), various radio devices (standard, spread spectrum modulation), microwave and GSM
- Support for TCP/IP-based WANs (Wide Area Networks) such as DSL, GPRS or Ethernet radio networks
- Support for redundant communication connections
- Expanded communication diagnostics functions for RTU communication links
- Remote programming of RTUs
- Support for different communication topologies – Point-to-point, multidrop (multistation mode) and hierarchic network structures
- High quality server redundancy scheme without data loss in the case of server failure

© Siemens AG 2014

Integration (continued)

Outstations/remote terminal units

WinCC/TeleControl for WinCC V7.0 SP2 supports the following preferred outstations for local distributed automation:

- Controller integrated into ET 200S (IEC 870-5-101/104 telecontrol protocols); for cost-sensitive applications, up to approx. 30 I/O signals or approx. 200 data points
- S7-300/S7-300F controller (SINAUT ST7, DNP3, IEC 870-5-101/104 telecontrol protocols); for extremely flexible configuration, up to 100 I/O signals or approx. 2 000 data points
- S7-400/S7-400F controller (SINAUT ST7, DNP3, IEC 870-5-101/104 telecontrol protocols); up to 500 I/O signals or approx. 5 000 data points
- S7-400/S7-400F redundant controller (IEC 870-5-101/104 and DNP3 telecontrol protocols); up to 500 I/O signals or approx. 5 000 data points
- Third-party station with the IEC 870-5-101/104 and DNP3 telecontrol protocols (depending on type of station)

The following table provides an overview of the current options for connecting to these outstations:

Spectrum of outstations and integration versions							
Telecontrol protocol		**SINAUT ST 7**		**DNP3**		**IEC 870-5-01**	**IEC 870-5-04**
Type of communication		Serial	Ethernet TCP/IP	Serial	Ethernet TCP/IP	Serial	Ethernet TCP/IP
Interface		TIM 4R-IE	TCP/IP WAN router or/and TIM 4R-IE	TCP/IP serial converter	TCP/IP WAN router	TCP/IP serial converter	TCP/IP WAN router
RTU/interface	ET 200S with integr. CPU (corresponding to S7-314)	-	-	-	-	IM 151-7 CPU or IM 151-8 PN/ DP CPU as well as 1 SI module + SIPLUS RIC library	IM 151-8 PN/ DP CPU + SIPLUS RIC library
	S7-300/S7-300F	TIM 3V-IE	TIM 3V-IE	TIM 3V-IE DNP3	TIM 3V-IE DNP3	CP 341 + SIPLUS RIC library	CP 343 + IEC on S7 or integr. PN interface + SIPLUS RIC library
	S7-400/S7-400F	TIM 4R-IE	TIM 4R-IE	TIM 4R-IE DNP3	TIM 4R-IE DNP3	CP 441 + SIPLUS RIC library	CP 443 + SIPLUS RIC library or integr. PN interface + SIPLUS RIC library
	S7-400H/ S7-400FH	-	-	TIM 4R-IE DNP3	TIM 4R-IE DNP3	ET 200M + 2 x CP 341 + SIPLUS RIC library	CP 443 + SIPLUS RIC library
	Third-party station	-	-	Depends on type of station		Depends on type of station	
Dial-up lines		•	-	•	-	-	-
Dedicated line and radio networks		•	•	•	•	•	•
Master/slave		•	•	•	•	•	•
Peer-to-peer		•	•	-	-	•	•
Mesh networks		•	•	•	•	•	•
Time tagging in RTU		•	•	•	•	•	•
RTU time synchronization		•	•	•	•	•	•
Data buffering in RTU		•	•	•	•	• [1]	• [1]
Routing with SIMATIC PDM		•	•	-	-	-	•
International standard		-	-	•	•	•	•

[1] Data buffering is limited to two SIMATIC S7 data blocks. Depending on the SIMATIC CPU, this corresponds to approx. 800 to 3200 buffered frames.

© Siemens AG 2014

Ordering data

	Article No.
SIMATIC TeleControl 7.0 SP2 for WinCC Basic Engineering Software package with SIMATIC TeleControl for WinCC 7.0 SP2 Engineering Software, 2 languages (English, German), executable with Windows XP Professional/Server 2003, Floating License for one user; electronic documentation on CD/DVD, 2 languages (English, German) Type of delivery: License key memory stick, Certificate of License incl. terms and conditions, SIMATIC WinCC Data Medium Package V7.0 + SP2 and CD "WinCC TeleControl Option V7.0 + SP2"	**6DL5000-7AA07-0XA5**
SIMATIC TeleControl 7.0 SP2 for Server Runtime (6 stations) Software package with SIMATIC TeleControl for WinCC 7.0 SP2 Runtime Software, 2 languages (English, German), executable with Windows Server 2003, Single License for one user; electronic documentation on CD/DVD, 2 languages (English, German) Type of delivery: License key memory stick, Certificate of License incl. terms and conditions, SIMATIC WinCC Data Medium Package V7.0 + SP2 and CD "WinCC TeleControl Option V7.0 + SP2"	**6DL5002-7AA07-0XA0**
SIMATIC TeleControl 7.0 SP2 for Server Runtime (12 stations) Software package with SIMATIC TeleControl for WinCC 7.0 SP2 Runtime software, 2 languages (English, German), executable with Windows Server 2003, single license for one user; electronic documentation on CD/DVD, 2 languages (English, German) Type of delivery: License key memory stick, Certificate of License incl. terms and conditions, SIMATIC WinCC Data Medium Package V7.0 + SP2 and CD "WinCC TeleControl Option V7.0 + SP2"	**6DL5002-7AB07-0XA0**
SIMATIC TeleControl 7.0 SP2 for Server Runtime (256 stations) Software package with SIMATIC TeleControl for WinCC 7.0 SP2 Runtime software, 2 languages (English, German), executable with Windows Server 2003, single license for one user; electronic documentation on CD/DVD, 2 languages (English, German) Type of delivery: License key memory stick, Certificate of License incl. terms and conditions, SIMATIC WinCC Data Medium Package V7.0 + SP2 and CD "WinCC TeleControl Option V7.0 + SP2"	**6DL5002-7AE07-0XA0**

	Article No.
SIMATIC TeleControl 7.0 SP2 for Server Runtime (unlimited stations) Software package with SIMATIC TeleControl for WinCC 7.0 SP2 Runtime Software, 2 languages (English, German), executable with Windows Server 2003, Single License for one user; electronic documentation on CD/DVD, 2 languages (English, German) Type of delivery: License key memory stick, Certificate of License incl. Terms and Conditions, SIMATIC WinCC Data Medium Package V7.0 + SP2 and CD "WinCC TeleControl Option V7.0 + SP2"	**6DL5002-7AF07-0XA0**
Driver software for telecontrol protocols **TeleControl SINAUT Driver** Runtime license for one WinCC Single Station or one WinCC server, Single License for 1 installation Requirement: Software SIMATIC TeleControl 7.0 SP2 for WinCC Server Runtime (6, 12, 256 stations) Type of delivery: License key memory stick, Certificate of License incl. terms and conditions	**6DL5101-8AX00-0XB0**
TeleControl DNP3 Driver Runtime license for one WinCC Single Station or one WinCC server, single license for 1 installation Requirement: Software SIMATIC TeleControl 7.0 SP2 for WinCC Server Runtime (6, 12, 256 stations) Type of delivery: License key memory stick, Certificate of License incl. terms and conditions	**6DL5101-8EX00-0XB0**
TeleControl IEC 870-5-101/-104 Driver Runtime license for one WinCC Single Station or one WinCC server, single license for 1 installation Requirement: Software SIMATIC TeleControl 7.0 SP2 for WinCC Server Runtime (6, 12, 256 stations) Type of delivery: License key memory stick, Certificate of License incl. terms and conditions	**6DL5101-8CX00-0XB0**

More information

For an overview of the complete performance spectrum on the Internet, visit:

Service & Support:
http://www.siemens.com/automation/csi_en_WW/service (international)

Technical Support (hotline) for Automation & Drives:
http://www.siemens.com/automation/csi_en_WW/support_request (international)

© Siemens AG 2014

Overview

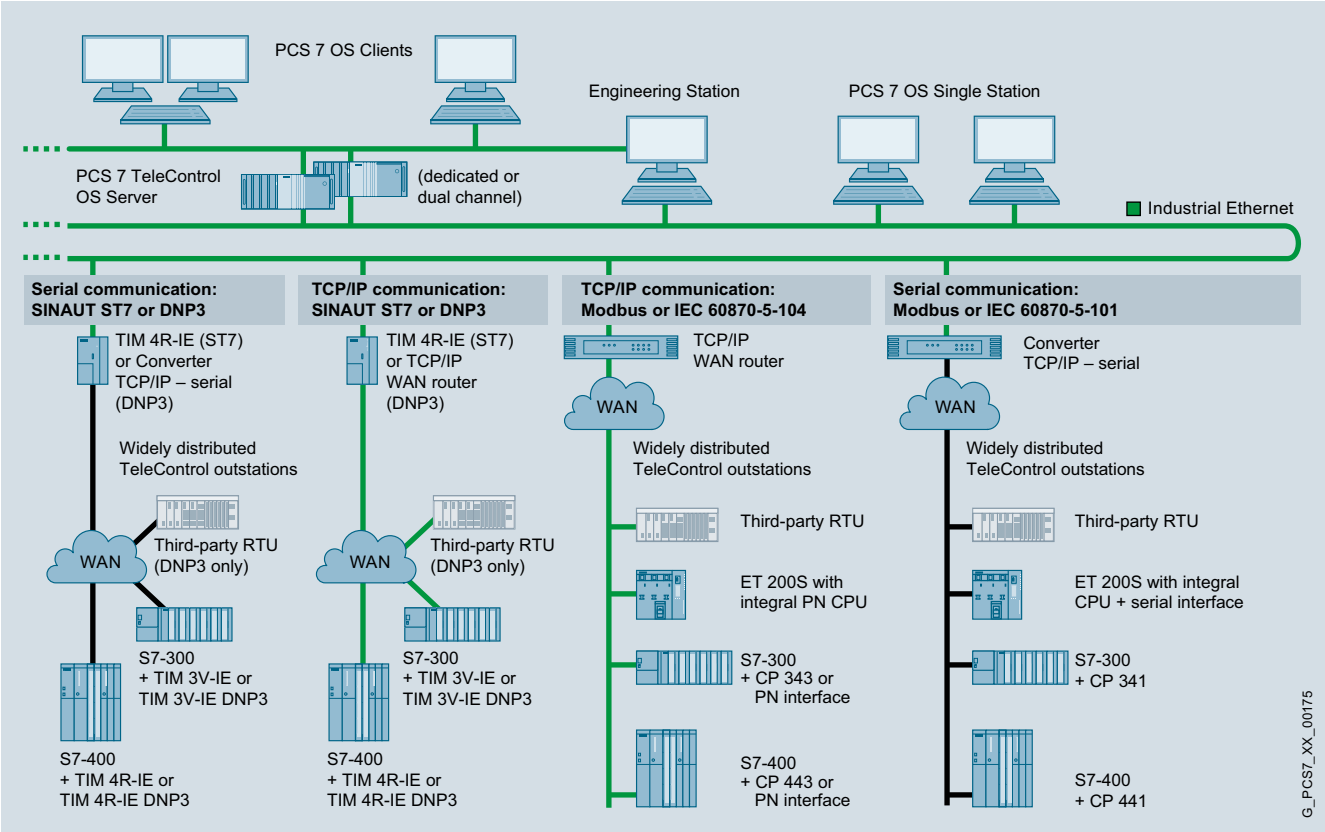

Integration and communication options with SIMATIC PCS 7 TeleControl

Plants are often scattered over very large grounds in the energy and transportation industries, and especially in the water & wastewater and oil & gas industries. In such cases it is necessary to integrate outstations for monitoring and controlling highly remote plant units (usually with a small or medium degree of automation) into the control system of the complete plant. This is carried out by means of telecontrol protocols over a WAN (Wide Area Network).

Conventional automation solutions for telecontrol systems use process control systems for the more complex central areas of the plant, and simpler Remote Terminal Units (RTUs) for the outstations, and then combine these separately configured plant units in a host network control system.

Direct integration of the telecontrol center

However, it is far more efficient if the telecontrol center for the RTUs is directly integrated into the process control system. The network control system as the superimposed integration level can then be omitted.

The SIMATIC PCS 7 TeleControl products are suitable for integration of the telecontrol center into the process control and engineering of the SIMATIC PCS 7 process control system. They support the RTU linking in various ways (see graphic "Integration and communication options with SIMATIC PCS 7 TeleControl" and table "Integratable remote stations – current range, communication options and features").

As far as the scope and performance of the automation functions are concerned, the requirements of the widely distributed plant sections are usually in the bottom to mid range, which means you can use automation stations of reduced dimensions for the outstations. SIMATIC PCS 7 TeleControl particularly supports the following outstations for distributed automation on site:

© Siemens AG 2014

Overview (continued)

RTU type[1]		RTU category	Possible telecontrol protocols
	Controller integrated in SIMATIC ET 200S	**Small with 30 ... 200 I/Os[2]** For small applications	• Modbus RTU • IEC 60870-5-101 • IEC 60870-5-104
	SIMATIC S7-300/S7-300F controller	**Medium with 100 ... 2 000 I/Os[2]** For medium sized applications	• SINAUT ST7 • DNP3 • Modbus RTU • IEC 60870-5-101 • IEC 60870-5-104
	SIMATIC S7-400/S7-400F controller	**Large with 500 ... 5 000 I/Os[2]** For larger applications requiring higher performance	• SINAUT ST7 • DNP3 • Modbus RTU • IEC 60870-5-101 • IEC 60870-5-104
	SIMATIC S7-400H/S7-400FH controller		• DNP3 • IEC 60870-5-101 • IEC 60870-5-104

[1] Also in version "SIPLUS extreme", e.g. for environments with temperatures from -25 °C to +70 °C, condensation or medial load

[2] Dependent on CPU size, protocol type, and application

For more information about telecontrol protocols, economic RTU bundles, possible operating modes, and special remote configurations, see:

- Catalog ST PCS 7 AO, Add-ons for the SIMATIC PCS 7 Process Control System, section Industry-specific applications, Telecontrol, Telecontrol - SIPLUS RIC (telecontrol protocol and IEC 60870-5-101/104 bundles as well as Modbus RTU)
- Catalog IK PI, Industrial Communication SIMATIC NET, Industrial Remote Communication, TeleControl Professional for substations (substations for ST7 protocol and substations for DNP3 protocol)

Note:

SIMATIC PCS 7 TeleControl V8.0 is supplied with the current service pack. SIMATIC PCS 7 TeleControl V8.0+SP2 can be operated in combination with the OS engineering software and OS runtime software SIMATIC PCS 7 V8.0+SP1.
The SIMATIC PCS 7 software must be ordered separately from Catalog ST PCS 7.

© Siemens AG 2014

Benefits

- SIMATIC PCS 7 TeleControl cannot only integrate newly configured RTUs into SIMATIC PCS 7, but also migrate units which already exist in outdoor areas.
- As a result of its high level of integration, automation based on SIMATIC PCS 7 TeleControl offers decisive advantages compared to previous automation solutions with telecontrol engineering.
  - The uniform SIMATIC PCS 7 software platform allows high efficiency during operation, and results in low costs for training, configuration and servicing.
  - The homogenous GUI for local and remote processes simplifies operation and simultaneously reduces the risk of an operator error.
- The Data Base Automation (DBA) software efficiently supports engineering and takes into account the conformity with SIMATIC PCS 7.
  - DBA considerably facilitates project-specific adaptation of the system and importing of existing configurations in the course of migration.
  - Extensions can be added during plant operation.

Application

Remote control and monitoring of distributed stations, as well as data recording and transmission, with the following focal points:

- Water industry
  - Well, pumping and slide valve stations in water supply networks and irrigation plants
  - Pumping and slide valve stations in water and wastewater pipelines
  - Storm-water tanks and siphon stations in wastewater networks
  - Storage units (elevated tanks)
- Oil and gas industries
  - Compressor, pressure reduction, transfer, block valve, and metering stations in gas networks
  - Pumping and slide valve stations in oil pipelines
  - Automation on the wellhead of gas and oil wells
  - Stations for the injection of water or CO_2 in gas or oil fields
- Energy management, environmental protection, and transportation
  - Equipment for power generation and distribution
  - District heating
  - Traffic control systems
  - Tunnels
  - Railway stations
  - Lighthouses
  - Environmental monitoring equipment
  - Weather stations

Design

The telecontrol center for the outstations (RTU) is integrated into the process control of the SIMATIC PCS 7 process control system in the form of an operator station in single station or server design (also redundant as option). No additional automation system for conditioning and connecting telecontrol-specific data need be planned in the SIMATIC PCS 7 system. With large quantity frameworks, a PCS 7 TeleControl operator station (single station/server) is preferably responsible only for the telecontrol mode (dedicated). With small quantity frameworks, a server or a single station can also control SIMATIC PCS 7 automation systems in central plant areas in addition to the RTUs (dual-channel mode).

To enable engineering of the PCS 7 TeleControl operator station (single station/server), the functions of the engineering station of the SIMATIC PCS 7 process control system are expanded by DBA technology (Data Base Automation) and the SIMATIC PCS 7 TeleControl block library.

For communication with the RTUs, SIMATIC PCS 7 TeleControl uses the telecontrol protocols SINAUT ST7, DNP3 and Modbus RTU (via serial as well as TCP/IP communication connections) and also IEC 60870-5-101 (serial) and IEC 60870-5-104 (Ethernet TCP/IP).

With serial RTU interfacing, the telecontrol connection can be implemented cost-effectively at the control center end (PCS 7 TeleControl OS as single station or server) using the following components:

- SINAUT TIM communication modules (SINAUT ST7 telecontrol protocol)
- TCP/IP-to-serial converter
  e.g. devices from the companies MOXA or Lantronix (telecontrol protocols DNP3, Modbus RTU, IEC 60870-5)

Remote stations can be connected either directly via Ethernet TCP/IP or via TCP/IP WAN routers to the SIMATIC PCS 7 plant bus (telecontrol protocols SINAUT ST7, DNP3, Modbus RTU, IEC 60870-5-104). When using the SINAUT ST7 telecontrol protocol, the SINAUT TIM communication module can be used in addition to the TCP/IP WAN router or as an alternative.

© Siemens AG 2014

Design (continued)

The table "Integrable outstations" shows the current connection possibilities depending on the type of RTU and type of communication.

Outstations for integration (RTU) Current range, communication options and features									
Telecontrol protocol		**SINAUT ST7**		**Modbus RTU**		**DNP3**		**IEC 60870-5-101**	**IEC 60870-5-104**
Type of communication		Serial	Ethernet TCP/IP	Serial	Ethernet TCP/IP	Serial	Ethernet TCP/IP	Serial	Ethernet TCP/IP
Interface on the PCS 7 TeleControl OS		TIM 4R-IE	TCP/IP WAN router or/and TIM 4R-IE	TCP/IP serial converter	TCP/IP WAN router	TCP/IP serial converter	TCP/IP WAN router	TCP/IP serial converter	TCP/IP WAN router
RTU/ interface	ET 200S with integrated CPU (corresponds to S7-314)	–	–	IM 151-7 CPU or IM 151-8 PN/ DP CPU as well as 1 SI Modbus module	IM 151-8 PN/DP CPU + S7 OpenModbus software/TCP PN-CPU	–	–	IM 151-7 CPU or IM 151-8 PN/ DP CPU as well as 1 SI module + SIPLUS RIC library	IM 151-8 PN/DP CPU + SIPLUS RIC library
	S7-300/ S7-300F	TIM 3V-IE	TIM 3V-IE	CP 341	CP 343 + SW library	TIM 3V-IE DNP3	TIM 3V-IE DNP3	CP 341 + SIPLUS RIC library	CP 343 + SIPLUS RIC library or integrated PN interface + SIPLUS RIC library
	S7-400/ S7-400F	TIM 4R-IE	TIM 4R-IE	CP 441	CP 443 + SW library	TIM 4R-IE DNP3	TIM 4R-IE DNP3	CP 441 + SIPLUS RIC library	CP 443 + SIPLUS RIC library or integrated PN interface + SIPLUS RIC library
	S7-400H/ S7-400FH	–	–	–	–	TIM 4R-IE DNP3	TIM 4R-IE DNP3	ET 200M + 2 x CP 341 + SIPLUS RIC library	CP 443 + SIPLUS RIC library or integrated PN interface + SIPLUS RIC library
	Third-party station	–	–	Depends on type of station		Depends on type of station		Depends on type of station	
Dialup lines		•	–	–	–	–	–	–	–
Dedicated lines and radio networks		•	•	•	•	•	•	•	•
Master/slave		•	•	•	•	•	•	•	•
Peer-to-peer		•	•	–	–	–	–	•	•
Mesh networks		•	•	–	–	•	•	•	•
Time tagging in RTU		•	•	–	–	•	•	•	•
RTU time synchronization		•	•	–	–	•	•	•	•
Data buffering in RTU		•	•	–	–	•	•	•	•
S7 routing		•	•	–	–	–	•	–	•
International standard		–	–	• (many versions)	• (many versions)	•	•	•	•

The telecontrol protocols used by SIMATIC PCS 7 TeleControl for remote communication are matched to the conditions of the widely distributed communication infrastructure.

© Siemens AG 2014

Design (continued)

The WAN transmission media suitable for communication between the RTUs and the telecontrol center are diverse, e.g.

- Private networks
  - Wireless
  - Dedicated line
  - WLAN
- Public networks
  - GPRS
  - EGPRS
  - UMTS
  - DSL

Based on the four basic topological forms (point-to-point, multi-point, star and ring), differently structured telecontrol networks can be implemented with these media versions, e.g. star over wireless, dedicated line or DSL. Through a combination of several basic topologies of the same or different media versions, it is also possible to design more complex network topologies, even with redundant communication paths. Optimum adaptation to the local conditions and the infrastructure which may already exist is possible in this manner.

Migration of existing telecontrol systems

SINAUT ST1 stations based on SIMATIC S5

In the course of migration of existing plants, RTUs based on SIMATIC S5 can also be integrated via SIMATIC PCS 7 TeleControl into the process control system. In the process, the ST1 telecontrol protocol is converted into the ST7 protocol in the central TIM communication module.

Units with Modbus RTU communication

Existing plant sections that have a Modbus infrastructure, even those outdoors, can be integrated into SIMATIC PCS 7 using SIMATIC PCS 7 TeleControl. These sections can be integrated into SIMATIC PCS 7 using the Modbus RTU protocol via serial lines or TCP/IP connections.

Whereas RTUs with Modbus TCP/IP interface can be integrated directly, third-party RTUs require special interface converters for telecontrol communication.

Third-party stations with telecontrol protocols

In addition to the Modbus RTU telecontrol protocol, the DNP3 (serial and TCP/IP), IEC 60870-5-101 (serial) and IEC 60870-5-104 (TCP/IP) telecontrol protocols also support the control center interfacing of third-party RTUs in the course of migration. A prerequisite is that the RTU supports the corresponding protocol and that the required interface converters are available.

Third-party stations with OPC

Third-party RTUs for which an OPC server exists can be integrated into the process control with the PCS 7 TeleControl operator system using additional engineering services on the basis of the DBA technology. SIMATIC PCS 7 TeleControl then supports data exchange between the operator system (OPC client) and the RTU (OPC server) per OPC DA.

SINAUT LSX systems

Existing SINAUT LSX systems can also be migrated with SIMATIC PCS 7 TeleControl. The SIMATIC S7 controllers with the EDC telecontrol protocol (Event Driven Communication) installed in the SINAUT LSX system are integrated into SIMATIC PCS 7 TeleControl with PCS 7 TeleControl S7 EDC drivers (for ordering data, refer to the following catalog section PCS 7 TeleControl operator system). Because the SINAUT LSX system can coexist at all levels next to the new system architecture as long as necessary, step-by-step modernization is possible without short-lived intermediate solutions.

Mode of operation

With SIMATIC PCS 7 TeleControl, the outstations can be integrated into SIMATIC PCS 7 so that the operator notices no difference between central or remote automation with regard to the operating philosophy and alarm response.

The OS clients of the client/server multi-user system are able to display data from RTUs and SIMATIC PCS 7 automation systems (AS) – which they receive from a server with dual-channel functionality or from two separate servers - together in one process image. Display is primarily on faceplates for process objects such as motors, valves etc., but also by means of trend curves and messages.

If the PCS 7 TeleControl OS server is of redundant design, the redundant pair of PCS 7 TeleControl OS servers matches all internally generated information, e.g. alarm states and results of calculations.

The communication mode between the control center and RTU depends on the type of WAN, the configuration of the telecontrol communication, and the support by the telecontrol protocol. The operating modes available with the SINAUT ST7 telecontrol protocol are described, for example, in the section "Industrial Remote Communication", "TeleControl Professional, Introduction" of Catalog IK PI ("Industrial Communication SIMATIC NET").

Function

Conditioning and display of data on the PCS 7 TeleControl OS (single stations/servers) are carried out by SIMATIC PCS 7 TeleControl blocks present in a library. These blocks support operator prompting in conformance with SIMATIC PCS 7 using symbols and faceplates, and also the hierarchy of the SIMATIC PCS 7 alarms.

In addition to blocks for processing of process data, the library also contains blocks for diagnostics and control of communication. If necessary, the supplied basic library can be extended using the DBA Type Editor by new script-based block types specific to the project.

Engineering can be automated efficiently and in conformance with SIMATIC PCS 7 using the DBA technology. DBA supports plant expansion during ongoing operation, and facilitates project-specific adaptation of the system as well as importing of existing configurations in the course of migration.

When linking RTUs by means of the SINAUT ST7, DNP3, IEC 60870-5-101 or IEC 60870-5-104 telecontrol protocol, the raw data in the remote stations is provided with a time tag and transmitted to the PCS 7 TeleControl OS (server/single station) acting as control center. Adaptation, further processing and archiving are carried out there. This procedure is appropriate for the event-based principle of operation of the telecontrol protocol as well as the subsequent chronological processing of data which was buffered in the remote station.

The time and date of the remote stations connected per SINAUT ST7, DNP3, IEC 60870-5-101 or IEC 60870-5-104 can be synchronized by the PCS 7 TeleControl OS (time master). Switchover between daylight-saving time and standard time is also taken into account.

In order to comply with guidelines, statutory directives and standards it may be necessary to provide special proof, e.g. proof of conformity with the ATV M260 guideline for sewage treatment plants. For this we recommend the ACRON software package equipped with even more functionality for long-term archiving and logging. ACRON is an add-on product in the Catalog ST PCS 7 AO (Add-ons for SIMATIC PCS 7).

More information

Additional information is available on the Internet at:

http://www.siemens.com/simatic-pcs7/telecontrol

© Siemens AG 2014

Overview

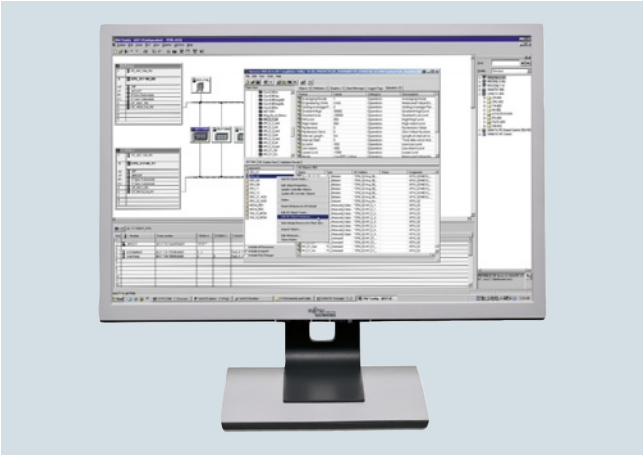

The PCS 7 TeleControl OS Engineering software package is used to configure a SIMATIC PCS 7 industrial workstation of single station or server design as a SIMATIC PCS 7 TeleControl engineering station.

Design

PCS 7 TeleControl OS Engineering

The software product PCS 7 TeleControl OS Engineering contains the OS engineering package PCS 7 TeleControl OS DBA and the associated engineering license.

Ordering data for the SIMATIC PCS 7 Engineering Software and for further SIMATIC PCS 7 software components for the PCS 7 TeleControl engineering station can be found in the Catalog ST PCS 7, section "Engineering system", "ES software".

SIMATIC PCS 7 Industrial Workstations suitable as basic hardware for a SIMATIC PCS 7 TeleControl engineering station can be found in Catalog ST PCS 7, section "Industrial Workstation/PC".

PCS 7 TeleControl OS DBA

PCS 7 TeleControl OS DBA is an OS engineering package for expansion of the SIMATIC PCS 7 Engineering Software, comprising the OS Data Base Automation (DBA) software and a library with OS symbols, OS faceplates, and OS diagnostics displays for remote stations (RTUs) of a telecontrol system.

Using the DBA type editor it is possible to assign the frequently unstructured variables of an RTU once to a block type and to display the tag structured on the operator station via the block's faceplate (OS faceplate). Each block type contains at least one faceplate and one symbol.

The DBA automatically generates the OS runtime database with the display hierarchy, required tags, interrupts, alarm messages, and alarm priorities, as well as the specific faceplates and block symbols. The display hierarchy is the basis for navigation between the process displays, for alarm management, and for implementation of safety measures. PCS 7 TeleControl OS DBA automatically positions the type-specific block symbols, for example, measured value, counter value, motor or gate valve, in the OS process pictures. These symbols are linked to the corresponding function blocks and faceplates using the database. Manual configuration is mainly limited to the design and positioning of the static graphic elements, for example, tubes or tanks.

The PCS 7 TeleControl OS symbols, faceplates and diagnostics displays created in conformance with SIMATIC PCS 7 take into account the specific features of telecontrol applications. This is demonstrated, for example, by the example of the counter block which offers versatile conditioning options for information on transported or processed quantities and volumes.

Definition of new user blocks

New user blocks can also be defined using the DBA type editor, and are handled during database generation like the blocks from the basic library.

In addition to arrangement of information in a variable structure, these user blocks can also calculate derived values using Visual Basic scripts in the server. This results in numerous possibilities for extending the functionality and for adapting the system to individual customer requirements.

Type-specific OS faceplates and OS symbols for the user blocks can be created using the standard tools for SIMATIC PCS 7 OS engineering (Graphics Designer and Faceplate Designer).

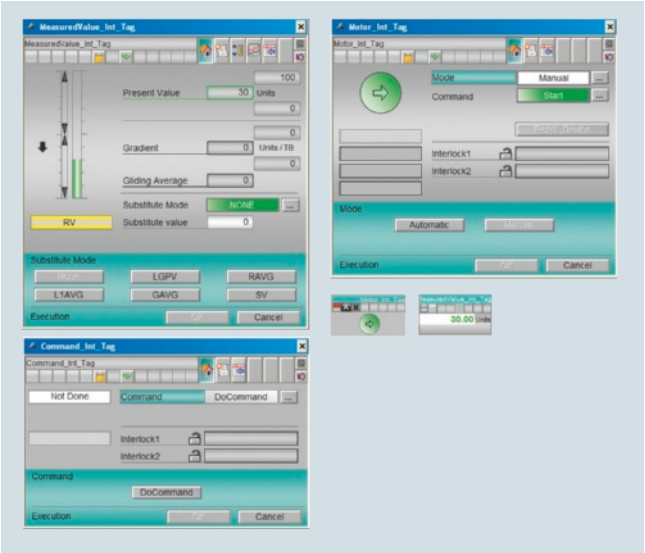

Faceplates from the SIMATIC PCS 7 TeleControl library

Upgrade

Existing SIMATIC PCS 7 TeleControl OS Engineering Software V7.1 can be upgraded from V7.1 to V8.0 (incl. service pack) using the SIMATIC PCS 7 TeleControl Upgrade Package. This SIMATIC PCS 7 TeleControl Upgrade Package is suitable for upgrading SIMATIC PCS 7 TeleControl OS Runtime Software V7.1. The SIMATIC PCS 7 ES and OS Software V7.1 combined in certain software products can be upgraded separately to V8.0 (incl. service pack) using the upgrade packages in Catalog ST PCS 7, sections "Upgrades for engineering system" and "Upgrades for operator system".

Engineering of Remote Terminal Units (RTUs) based on S7-300

Using the technology blocks of the SIMATIC PCS 7 Industry Library (sublibrary "Industry Library for S7"), Remote Terminal Units (RTUs) based on S7-300 can also be configured in CFC in APL style system compatibility. For information about the SIMATIC PCS 7 Industry Library and ordering data, refer to the Chapter "Technology libraries".

© Siemens AG 2014

Ordering data

	Article No.
Engineering software	
PCS 7 TeleControl OS Engineering V8.0 To expand a SIMATIC PCS 7 Engineering Station (unlimited POs) for PCS 7 TeleControl; software package without SIMATIC PCS 7 Engineering Software Engineering software, 2 languages (English, German), software class A, runs on Windows XP Professional 32-bit, Windows 7 Ultimate 32/64-bit, Windows Server 2003 R2 Standard 32-bit or Windows Server 2008 R2 Standard 64-bit, floating license for 1 user Electronic documentation on DVD, 2 languages (English, German) Delivery form package (without SIMATIC PCS 7 Software Media Package): • License key USB stick, certificate of license • DVD "PCS 7 TeleControl"	**6ES7658-7JX08-0YA5**

	Article No.
Upgrade Package	
SIMATIC PCS 7 TeleControl Upgrade Package V7.1 to V8.0 Software package without SIMATIC PCS 7 ES/OS software 2 languages (English, German), software class A, runs with Windows XP Professional 32-bit, Windows 7 Ultimate 32/64-bit, Windows Server 2003 R2 Standard 32-bit or Windows Server 2008 R2 Standard 64-bit; single license for 1 installation Note: SIMATIC PCS 7 ES and OS Software V7.1 included in certain software packages must be upgraded to V8.0 (incl. service pack) using separate upgrade packages. Delivery form package (without SIMATIC PCS 7 Software Media Package): • License key USB stick, certificate of license • DVD "PCS 7 TeleControl" and product information	**6ES7652-5GX08-0YE0**

© Siemens AG 2014

Overview

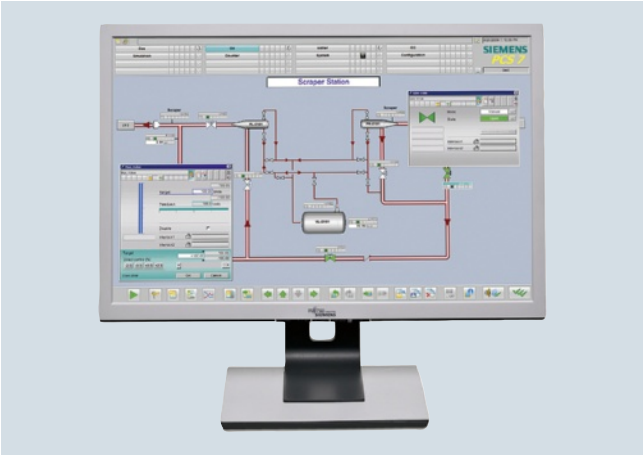

Uniform process control for central and remote units

The PCS 7 TeleControl OS software packages offered for OS runtime mode are tailored to the architecture of the SIMATIC PCS 7 operator system. They support single-user systems (single stations) as well as multi-user systems with up to 12 servers/redundant pairs of servers and up to 32 clients.

Design

PCS 7 TeleControl OS servers and PCS 7 TeleControl OS single stations can integrate both local SIMATIC PCS 7 automation systems and widely distributed outstations (RTUs) of a telecontrol system into the process control.

Depending on the configuration of a PCS 7 TeleControl operator system as single station or client/server combination (single or redundant), the following software components are required:

Software required		SIMATIC PCS 7 architecture			
		OS single station	Client server		
			Client	Server not redundant	Server redundant
PCS 7 OS Software Single Station V8.0 (incl. SP) see section "OS software" in the Chapter "Operator system"		•	–	–	–
PCS 7 OS Software Server V8.0 (incl. SP) see section "OS software" in the Chapter "Operator system"		–	–	•	–
PCS 7 OS Software Server Redundancy V8.0 (incl. SP) see section "OS software" in the Chapter "Operator system"		–	–	–	•
PCS 7 OS Software Client V8.0 (incl. SP) see section "OS software" in the Chapter "Operator system"		–	•	–	–
PCS 7 TeleControl OS Runtime V8.0 (incl. SP)		•	–	•	• (2 licenses)
PCS 7 TeleControl Driver (alternative)	SINAUT	•	–	•	• (2 licenses)
	DNP3	•	–	•	• (2 licenses)
	IEC 60870-5-101/-104	•	–	•	• (2 licenses)
	Modbus RTU	•	–	•	• (2 licenses)
	S7 EDC	•	–	•	• (2 licenses)

Ordering data for SIMATIC PCS 7 OS Runtime licenses for expanding the OS Runtime POs (single station/server) and additional SIMATIC PCS 7 OS software components for PCS 7 TeleControl Operator Systems can be found in Catalog ST PCS 7, Chapter "Operator system", section "OS software".

SIMATIC PCS 7 Industrial Workstations suitable as basic hardware for configuration of an operator station as PCS 7 TeleControl OS single station, PCS 7 TeleControl OS server or PCS 7 TeleControl OS client can be found in Catalog ST PCS 7, section "Industrial Workstation/PC".

PCS 7 TeleControl OS software for single station, server and redundant server

The software product PCS 7 TeleControl OS Runtime contains the PCS 7 TeleControl OS software including the object library with the PCS 7 TeleControl OS faceplates and symbols as well as the Runtime license for operation on an OS single station or OS server.

An additional PCS 7 TeleControl Driver license is required for each telecontrol protocol used (SINAUT, DNP3, IEC 60870-5-101/-104, Modbus RTU, S7 EDC) per PCS 7 TeleControl OS single station and per PCS 7 TeleControl OS server.

The SIMATIC PCS 7 OS Software must be ordered separately. You can find the SIMATIC PCS 7 OS software for OS single station and OS server in section "Operator system", "OS software", and the SIMATIC PCS 7 OS software for a redundant pair of OS servers (including RS 232 cable, 10 m) in Catalog ST PCS 7, section "Operator system", "OS redundancy".

Upgrade

Existing SIMATIC PCS 7 TeleControl OS Runtime Software V7.1 can be upgraded from V7.1 to V8.0 (incl. service pack) using the SIMATIC PCS 7 TeleControl Upgrade Package. This is also suitable for upgrading the SIMATIC PCS 7 TeleControl OS Engineering Software V7.1. The SIMATIC PCS 7 ES and OS Software V7.1 combined in certain software products must be upgraded separately to V8.0 (incl. service pack) using the upgrade packages in Catalog ST PCS 7, sections "Upgrades for engineering system" and "Upgrades for operator system".

© Siemens AG 2014

Ordering data

	Article No.
Runtime software	
PCS 7 TeleControl OS Runtime V8.0 To expand a SIMATIC PCS 7 OS (server/single station) for PCS 7 TeleControl Software package without SIMATIC PCS 7 OS software Runtime software, 2 languages (English, German), software class A, runs on Windows XP Professional 32-bit, Windows 7 Ultimate 32/64-bit, Windows Server 2003 R2 Standard 32-bit or Windows Server 2008 R2 Standard 64-bit; single license for 1 installation Electronic documentation on DVD, 2 languages (English, German) Delivery form package (without SIMATIC PCS 7 Software Media Package): • License key USB stick, certificate of license • DVD "PCS 7 TeleControl"	**6ES7658-7KX08-0YA0**
Telecontrol protocol driver	
PCS 7 TeleControl SINAUT Driver Runtime software, license for OS single station or OS server, single license for 1 installation Requirement: Software PCS 7 TeleControl OS Runtime V8.0 Delivery form package (without SIMATIC PCS 7 Software Media Package) License key USB stick, certificate of license	**6DL5101-8AX00-0XB0**
PCS 7 TeleControl DNP3 driver Runtime software, license for OS single station or OS server, single license for 1 installation Requirement: Software PCS 7 TeleControl OS Runtime V8.0 Delivery form package (without SIMATIC PCS 7 Software Media Package) License key USB stick, certificate of license	**6DL5101-8EX00-0XB0**
PCS 7 TeleControl IEC 60870-5-101/-104 Driver Runtime software, license for OS single station or OS server, single license for 1 installation Requirement: Software PCS 7 TeleControl OS Runtime V8.0 Delivery form package (without SIMATIC PCS 7 Software Media Package) License key USB stick, certificate of license	**6DL5101-8CX00-0XB0**

	Article No.
Telecontrol protocol driver *(continued)*	
PCS 7 TeleControl Modbus RTU Driver Runtime software, license for OS single station or OS server, single license for 1 installation Requirement: Software PCS 7 TeleControl OS Runtime V8.0 Delivery form package (without SIMATIC PCS 7 Software Media Package) License key USB stick, certificate of license	**6DL5101-8BX00-0XB0**
PCS 7 TeleControl S7 EDC Driver Runtime software, license for OS single station or OS server, single license for 1 installation Requirement: Software PCS 7 TeleControl OS Runtime V8.0 Delivery form package (without SIMATIC PCS 7 Software Media Package) License key USB stick, certificate of license	**6DL5101-8DX00-0XB0**
Upgrade Package	
SIMATIC PCS 7 TeleControl Upgrade Package V7.1 to V8.0 Software package without SIMATIC PCS 7 ES/OS software 2 languages (English, German), software class A, runs with Windows XP Professional 32-bit, Windows 7 Ultimate 32/64-bit, Windows Server 2003 R2 Standard 32-bit or Windows Server 2008 R2 Standard 64-bit; single license for 1 installation Note: SIMATIC PCS 7 ES and OS Software V7.1 included in certain software packages must be upgraded to V8.0 (incl. service pack) using separate upgrade packages. Delivery form package (without SIMATIC PCS 7 Software Media Package): • License key USB stick, certificate of license • DVD "PCS 7 TeleControl" and product information	**6ES7652-5GX08-0YE0**

© Siemens AG 2014

Overview

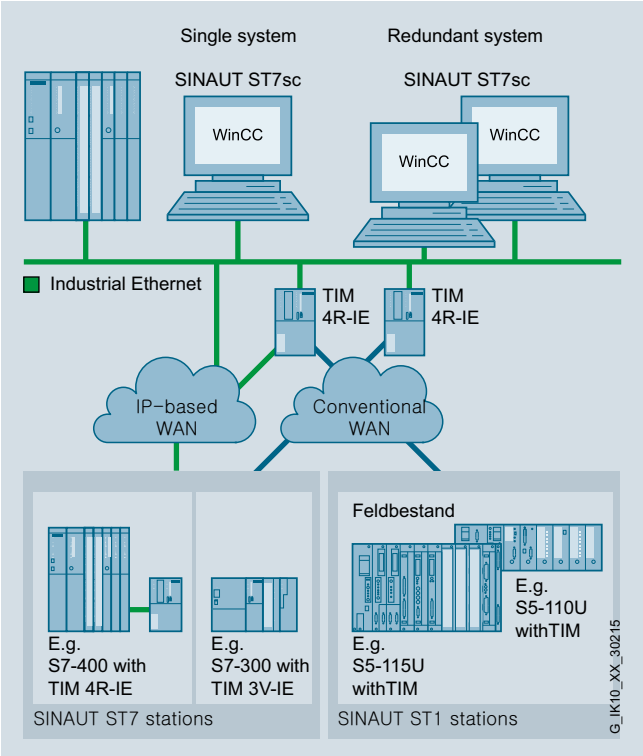

SINAUT ST7sc control center system (non-redundant or redundant) with connected ST7 and ST1 terminals

- The SCADA Connect Software SINAUT ST7sc permits the connection of telecontrol substations with ST7 and ST1 protocol to control center systems that can operate as OPC clients, e.g. iFIX from Intellution, InTouch from Wonderware, Micro SCADA from ABB.
- SINAUT ST7sc is also suitable for data exchange with other applications via OPC, e.g. with the Office application Excel.
- The OPC data can be exchanged either synchronously or asynchronously (change-controlled)
- The "Item Buffering" function prevents the loss of data on failure of the OPC client or if SINAUT terminals supply data at a faster rate than can be transferred via the OPC interface.
- System availability can be increased by connecting two ST7sc systems working in parallel to a redundant client system.
- SINAUT ST7sc additionally assumes the function of a telecontrol center. There is therefore no need for a separate SIMATIC S7-CPU for this function.

Benefits

get Designed for Industry

- Connection of SINAUT stations to HMI, SCADA and Office applications via OPC
- The "Item Buffering" procedure ensures seamless archiving
- Time and cost savings through simple configuration without requiring detailed knowledge of SINAUT

Application

The TeleControl system allows substations to be networked with a control center via WAN (**W**ide **A**rea **N**etwork) or Industrial Ethernet. This control center can also be a SIMATIC terminal or a PC-based control center, for example, WinCC with the SINAUT ST7cc add-on.

SINAUT ST7sc offers suppliers of other control center systems the option of connecting to substations with SINAUT ST7 without having to integrate a SINAUT interface. Communication is over OPC: As an OPC server, SINAUT ST7sc forms the interface between the telecontrol system and the third-party control system connected as an OPC client.

The OPC interface is also suitable for data exchange with other applications, for example, the Microsoft Office application Excel.

Design

SINAUT ST7s is installed on a Windows PC. The OPC server function supports connection of one or more client applications. These clients are either connected over a suitable communication medium, e.g. Industrial Ethernet, with the server or they are installed on the same PC as SINAUT ST7sc.

Connection of one or more telecontrol substations to the ST7sc PC is carried out either via the MPI bus or Industrial Ethernet, depending on the TIM communication module used.

Provision of current time of day:

- For TIMs, that are connected over MPI to the ST7sc PC, time synchronization is only possible through a DCF77 receiver equipped with a TIM. This provides central time synchronization for the ST7sc PC and all other stations.
- For TIMs that are connected over Industrial Ethernet to the ST7sc PC, time synchronization is performed over ST7sc.

Outside the reception area of the DCF77 real-time transmitter the use of a GPS receiver is recommended. This determines the local time from the satellite-based global positioning system (GPS).

© Siemens AG 2014

Function

In the case of a change, the telecontrol substation detects the process data and transfers it over the relevant WAN to SINAUT ST7sc. The received SINAUT messages are decoded here and stored in the ST7sc variable list as configured. An OPC client can read these received data from the ST7sc variable list via the OPC server interface "Data Access". This is performed either synchronously or asynchronously.

In the reverse direction, the OPC client can write data that is to be sent to a station (e.g. commands, set points, parameters) to the ST7sc variable list via the OPC server interface. These are converted to SINAUT data frames and sent via the WAN to the telecontrol substation specified by means of configuration.

A special feature of the telecontrol system is that process data are protected against loss. If the connection from the substation to the control room fails, for example, the local substation will save all the data changes that occur during the downtime complete with time stamps. This ensures that connection downtimes of several hours or even several days can be bridged without loss of data. So that the data saved in the substations will also arrive at the OPC client safely later, ST7sc contains the "item buffering" procedure, which helps to avoid data loss on the way to the OPC client:

- When the OPC "data access" interface that represents a process image is updated by the substations faster than the client can read it;
- When the OPC client is not available for a shorter or longer time or when the OPC communication path fails.

ST7sc normally only creates one "memory cell" per item in which the last status or value of the item is retained, but when the item buffering procedure is selected, one buffer is created per item in which all changes to the affected item are saved consecutively complete with time stamps. Saving is performed until the individual changes can be transferred to the OPC client.

The item buffering procedure requires an HMI application that can process time-stamped data even when the time stamp is several days old, e.g. following a long connection failure.

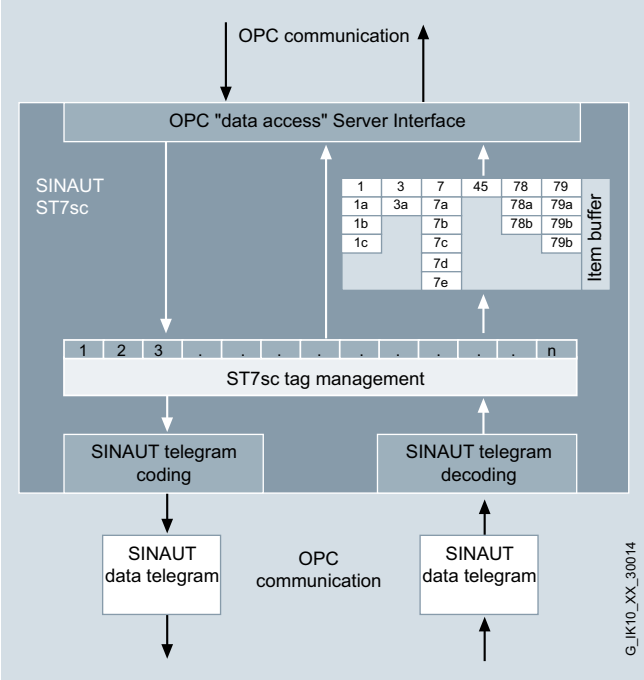

System configuration with SINAUT ST7sc

Redundant application

SINAUT ST7sc supports connection to a redundant client system. Two ST7sc systems must be used in this case. The data received from the stations are transferred by them in parallel and mutually independently to both clients and data are received from the clients that must be sent to the substations.

The redundancy mechanisms are located in this case on the client side:

- The client ensures that the data transferred in parallel is evaluated and compared correctly;
- The client transfers data to be sent to the substation once only to one of the two ST7sc, so that transmission is not duplicated.

Configuration

The ST7sc is configured using the ST7sc Config tool that is included in the scope of supply of the ST7sc software CD.

The documentation for the ST7sc and the Config tool is also located on this CD.

© Siemens AG 2014

Technical specifications

	SINAUT ST7sc V2.1
Operating systems	Windows XP SP3; Windows Server SP3; Windows 7 SP1 (32-bit/64-bit); Windows Server 2008 SP2 (32-bit) Windows Server 2008 R2 SP1 (64-bit)
VMware	ESXi V5.1

	SINAUT ST7sc V2.1
Configuration	
• ST7sc	ST7sc Config-Tool V2.1
• SINAUT system	SINAUT Engineering Software
Quantity framework	
• 6 SINAUT terminals	**S**mall license
• 12 SINAUT terminals	**M**edium license
• for more than 12 SINAUT terminals	**L**arge license

Ordering data

	Article No.
SINAUT ST7sc	
Software for connecting SINAUT stations to HMI, SCADA and Office applications via OPC; single license for 1 installation of the runtime software; configuration software and electronic manual on CD-ROM; operating systems: Windows XP SP3, Windows Server 2003 SP2, Windows 7 SP1 (32-bit/64-bit), Windows Server 2008 SP2 (32-bit), Windows Server 2008 R2 SP1 (64-bit); license key on USB flash drive; German/English;	
Standard licenses S (Small), M (Medium), L (Large)	
SINAUT ST7sc V2.1 S Small license for max. 6 SINAUT stations	**6NH7997-5CA21-0AA1**
SINAUT ST7sc V2.1 M Medium license for max. 12 SINAUT stations	**6NH7997-5CA21-0AA2**
SINAUT ST7sc V2.1 L Large license for more than 12 SINAUT stations	**6NH7997-5CA21-0AA3**
PowerPacks for upgrading the license to M or L	
SINAUT ST7sc V2.1 SM PowerPack; License upgrade from ST7sc S to ST7sc M (from 6 to 12 stations)	**6NH7997-5AA21-0AD2**
SINAUT ST7sc V2.1 SL PowerPack; License upgrade from ST7sc S to ST7sc L (from 6 to more than 12 stations)	**6NH7997-5AA21-0AD3**
SINAUT ST7sc V2.1 ML PowerPack; License upgrade from ST7sc M to ST7sc L (from 12 to more than 12 stations)	**6NH7997-5AA21-0AE3**

	Article No.
Upgrade packages	
ST7sc V2.1 U **upgrade from V2.0 to V2.1** Upgrade of all licenses V2.0	**6NH7997-5CA21-0GA1**
ST7sc V2.1 S **upgrade from V1.0 … V1.2 to V2.1** for S license holders	**6NH7997-5CA21-2GA1**
ST7sc V2.1 M **upgrade from V1.0 … V1.2 to V2.1** for M or SM license holders	**6NH7997-5CA21-2GA2**
ST7sc V2.1 L **upgrade from V1.0 … V1.2 to V2.1** for L, SL or ML license holders	**6NH7997-5CA21-2GA3**
Accessories	
TIM 3V-IE communications module With an RS 232 interface for SINAUT communication via a conventional WAN or an IP-based network (WAN or LAN)	**6NH7800-3BA00**
TIM 3V-IE Advanced communications module With an RS 232 interface and an RJ45 interface for SINAUT communication via a conventional WAN and an IP-based network (WAN or LAN)	**6NH7800-3CA00**
TIM 4R-IE communications module With two combined RS 232/RS 485 interfaces for SINAUT communication via conventional WANs and two RJ45 interfaces for SINAUT communication via IP-based networks (WAN or LAN)	**6NH7800-4BA00**

© Siemens AG 2014

Overview

Design principle of a telecontrol system and plants with SIMATIC

Telecontrol involves the connection of distant process stations to one or more central control systems. A telecontrol system can be subdivided into the following components

- Control center
- Substations
- Communication network

Various different public or private networks can be used for communication for the purposes of monitoring and control. The event-driven or cyclic exchange of the process data takes place via special telecontrol protocols such as SINAUT ST7, DNP3.

Substations

With SIMATIC, Siemens offers a wide range of components for the different application areas for establishing telecontrol substations – Remote Terminal Units (RTUs).

The hardware basis is a PLC, in each case supplemented for the telecontrol function with special hardware and software components, e.g. TIM communication modules. All the local functions supported by the respective PLC for the connection of I/O via bus systems, connection of HMI or sensors, etc., are also available without restriction in the RTU configuration.

The individual solutions differ in the

- Performance class (number of required IO signals and controller performance)
- Support for the telecontrol protocols

The following table provides an overview of the different types of substations on offer with the essential features.

	Telecontrol protocols						Private networks			Public networks			
	TeleControl Basic	SINAUT ST7	DNP3	IEC 60870-5-104	IEC 60870-5-101	SINAUT ST1	Wireless	Dedicated line	WLAN	GPRS	EGPRS	UMTS	DSL
ET 200S	–	–	–	•	•	–	•	•	•	•	•	•	•
S7-1200	•	–	•	•	–	–	• 2)	–	• 2)	•	• 1)	• 1)	• 1)
S7-200	•	–	–	–	–	–	–	–	–	•	–	–	–
S7-300	•	•	•	•	•	•	•	•	•	•	•	•	•
S7-400	–	•	•	•	•	•	•	•	•	•	•	•	•
S7-400FH	–	–	•	•	–	–	•	•	•	•	•	•	•
WinAC RTX	–	–	–	•	–	–	•	•	•	•	•	•	•

• suitable – not suitable 1) via external IP-Router 2) via Industrial Ethernet

G_IK10_XX_30293

Classification of the different TeleControl substations (RTU types)

© Siemens AG 2014

Overview (continued)

TIM communications modules

The hardware component for the telecontrol wireless station of a telecontrol substation is the TIM (**T**elecontrol **I**nterface **M**odule) communication module. It is used by the S7 CPU or control center PC for data exchange via the relevant telecontrol network, optionally with the SINAUT ST7, SINAUT ST1 or DNP3 protocol.

Different protocols cannot be combined in one communication network. However, communication networks with different protocols can always be combined in one project if they are connected to the central control center via separate interfaces.

Function

Each WAN interface of a TIM can be operated with the function "Station", "Node terminal" or "Control center" (exception: the function "Node terminal" is not available on the TIM 3V-IE, TIM 3V-IE DNP3, TIM 4R-IE DNP3, and the function "Control center" is not available on the TIM 3V-IE DNP3 and TIM 4R-IE DNP3). This enables the construction of the type of hierarchical communication structures required in classic WANs.

On IP-based networks, in which each partner has equal priority, this classification can be dismissed. The transmission via GPRS, however, represents an exception, as without special GPRS provider contracts, direct communication from GPRS station to GPRS station is not possible. This can be solved by "rerouting" through a control center TIM, as in a classic WAN with cross-traffic on a dedicated leased line or wireless. In this case, the interfaces of the participating TIMs are to be set to the function "Control center" or "Station" in an IP-based network as well so that the correct path from "Station" to "Station" will be found automatically through the "Control center".

The TIM independently processes the data traffic via the network connected in each case and it does this according to the store-and-forward principle. For this purpose, the module has its own processor and a RAM for buffering data messages (depending on the type of TIM, between 10 000 and 56 000 message frames). The saving of the messages prevents a loss of data if the communication link is faulty or the partner fails. It also helps to reduce connection charges in dialup networks. If the optional backup battery is used for the TIM 4R-IE or TIM 4R-IE DNP3, stored data frames are not lost even if the 24 V supply voltage fails.

Reading and writing data that the TIM is to send or receive for a CPU can also be done with:

- **TD7onCPU**, the SINAUT TD7 software for the CPU, applicable to S7-300- and S7-400-CPUs as well as C7 compact control systems:
  The SINAUT program in the CPU, configured with modules from the SINAUT TD7 library, acquires the process data to be transferred, checks it for changes and transfers the changes to the TIM for transmission over the WAN. Messages received without faults by the TIM via the WAN are forwarded to the local CPU. A block that has been integrated there for evaluating the specific message frame ensures that the received information is output to the outputs or data areas configured in the block.
  This block library cannot be used in conjunction with TIM 3V-IE DNP3 or TIM 4R-IE DNP3.
- **TD7onTIM**, the SINAUT TD7 software integrated in the TIM (not present in the case of the TIM 4R / TIM 4RD), can be used with S7-300 CPUs and C7 compact control systems:
  The TD7onTIM program configured by the user reads the process data to be transferred directly from the memory areas of the CPU inserted into the S7-300 rack (inputs, bit memories, DBs), checks them for changes and then transfers the changes to the send buffer of the TIM for transmission over the WAN. Data from message frames received without fault by the TIM via the WAN are directly written by the TIM into the configured memory areas of the CPU.

If required, the data acquired by "TD7onCPU" or "TD7onTIM" can be tagged with a time stamp and the "normal" or "high" priority identification for transmission over a chargeable network, e.g. dial-up or GPRS. "TD7onTIM" also allows extremely important data to be identified with the "Interrupt" priority. These have priority over all other message frames saved in the send buffer, i.e. they are transmitted before the others.

If the local SINAUT station is a control center PC, operator inputs are recorded by the PC program in accordance with the data message frame configuration, and transferred with the configured destination address to the TIM. Messages received without faults by the TIM via the WAN are forwarded to the control center PC. Evaluation of the relevant frame is handled by the control system software.

The TIM first saves the data to be sent in its RAM buffer.
The subsequent response of the TIM on sending this data is explained in the two following sections.

© Siemens AG 2014

Function (continued)

Communication via a classic WAN

The response of the TIM on sending the data depends on the WAN type and the TIM function that is set on the WAN interface:

- Dedicated line, wireless network;
  if the interface is operated in the function "station" or "node terminal", the TIM waits to be polled by the control center before it transfers the stored data message frames.
  If there are no message frames available, polling is simply acknowledged.
  If operated as a "control center", the TIM sends one of the message frames saved in the buffer following each completed poll + response (standard setting). If a larger number of message frames is to be sent between two polls, this can be specified when the TIM is configured.
- Dial-up network;
  in "station" or "node terminal" mode, the TIM will initially not be active in the case of data with "normal" priority. In the case of data of "high" or "interrupt" priority, the TIM will immediately try to establish a link to the addressed partner in order to transfer the data. If data of "normal" priority are also available in the TIM buffer at this time, these will also be transferred. Data of "interrupt" priority will always be transferred first. The data of "high" and "normal" priority will subsequently be transferred in accordance with the FIFO principle, i.e. regardless of their respective priority.
  If the interface is set to the "control center" function, the TIM will always try regardless of priority to establish a link to the addressed partner and to transfer the data.

The SINAUT ST7/ST1 protocol can be used for all WAN types and TIM functions. The DNP3 protocol only allows use of dedicated lines and wireless networks in the function "Station". The operating mode used depends on the type of WAN:

- Data exchange via dedicated line and wireless network usually takes place in "Polling" mode. In wireless networks with SINAUT ST7 protocol, the operating mode "Polling with time slot method" can be selected if required.
- On dial-up networks (only with SINAUT ST7/ST1 protocol), data exchange always takes place in "Spontaneous" mode.

Communication via an IP-based network

For transmission via an IP-based network, a permanent S7 connection via which the partners exchange the data packages is established in each case between two TIMs or between one TIM and the control system.

PG communication

PG communication allows all S7 stations connected to the LAN, e.g. Industrial Ethernet, to be remotely programmed. With the aid of S7 routing it is possible to use programming device communication across networks.

Cross-network PG communication functions with the SINAUT ST7 protocol for all classic and IP-based WANs. Remote programming and remote diagnosis of the stations connected to the WAN (CPUs and TIMs) is therefore possible.

In IP-based DNP3 networks, PG communication does not take place via the protocol itself, but via a separate PG connection (TCP/IP connection).

Diagnostics & service

The "SINAUT Diagnostics & Service Tool" provides comprehensive diagnostic functions and tools for commissioning and troubleshooting, e.g.:

- Operating status of the TIM
- Module status of the TIM
- General diagnostic information
- Diagnostics buffer of the TIM
- Status of the connections to local and remote communication partners (CPUs, TIMs, control systems)
- TIM frame monitor for recording the frame traffic
- Disabling and enabling stations in the dedicated line or wireless network, e.g. during commissioning

TIM modules with Ethernet interface also offer the following:

- Status and fill level of the send buffer, for each communication partner separately
- Diagnostic information regarding TD7onTIM

Configuration

The "SINAUT ES" configuration software is used for configuring the TIM. Modules from the "SINAUT TD7 module library" must be used for configuring the SINAUT program in the CPU (TD7onCPU). Both software packages are part of the SINAUT ES engineering software. The SINAUT ST7 configuration software requires that STEP 7 V5.5 with SP2, or higher, is installed.

The configuration data – like the interface functionality, protocol, addresses of the communication participants, the telephone numbers of the partner in the dial-up network, etc. – that are required in each case can be saved in the Flash EPROM on every TIM or, in the case of the TIM 4R-IE or TIM 4R-IE DNP3, also on the optional plug-in C-PLUG. On all TIMs with Ethernet interface, the configuration data can also be stored on the memory card (MMC) of the CPU when installing in an S7-300 rack or in a C7 control system. The TIM can be replaced without the need for a programming device if the configuration data is saved in the CPU or in the C-PLUG.

Approvals

All TIM communication modules have the approvals CE, FM, ATEX, cUL508 (= UL508, CSA22.2) and cUL HazLoc. The TIM 3V-IE and TIM 4R-IE modules are also available in a SIPLUS version for the extended temperature range (-25 ... +70 °C).

© Siemens AG 2014

Overview

Substations for ST7 protocol

The TIM communication module is housed in an S7-300 enclosure and is available in different versions:

TIM 3V-IE/TIM 3V-IE Advanced

The TIM 3V-IE is a SINAUT communications module for the SIMATIC S7-300. It has an RS232 interface to which a matching external modem can be connected for data transfer via a conventional WAN. It additionally possesses an RJ45 interface, which permits communication over IP-based networks. In the case of the TIM 3V-IE, SINAUT communication can be processed alternately via one of the two interfaces, while in the TIM 3V-IE Advanced both interfaces can be operated simultaneously.

TIM 4R-IE

The TIM 4R-IE has two RS232/RS485 interfaces for data transmission via conventional WANs and additionally two RJ45 interfaces for connection to IP-based networks (WAN or LAN).

This TIM can be used as communication processor in a SIMATIC S7-300, but it is especially suitable as telecontrol module for a SIMATIC S7-400 or control center PC (SINAUT ST7cc or ST7sc). It is then connected without S7-300 CPU as a standalone device via one of the two Ethernet interfaces to the S7-400 or the PC .

The four transmission paths can all be different and operated independently of one another, but also in any redundant combination.

Design

Configuration examples

The figure below shows a simple S7-300 station equipped with a TIM 3V-IE. The S7-300 can be connected via the RS232 interface of the TIM to a conventional WAN (e.g. dedicated line or dialup network), and via the RJ45 interface to an IP-based network, e.g. GPRS. If the S7-300 were equipped with a TIM 3V-IE Advanced, the two interfaces could be used simultaneously for SINAUT communication.

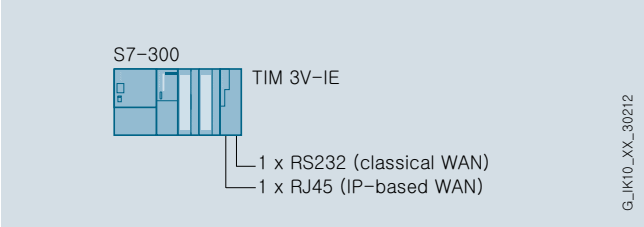

S7-300 with TIM 3V-IE

In the case of an S7-400, both a TIM 4R and a TIM 4R-IE can be used for data communication. In both cases the TIM is used as an independent device, i.e. without S7-300 CPU. The TIM 4R is connected to the S7-400 via MPI, while the TIM 4R-IE is connected via one of the two Ethernet interfaces of this module. The figures below illustrate the two alternatives.

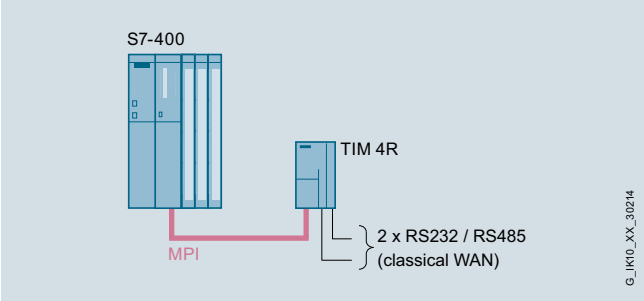

S7-400 with TIM 4R connected via MPI

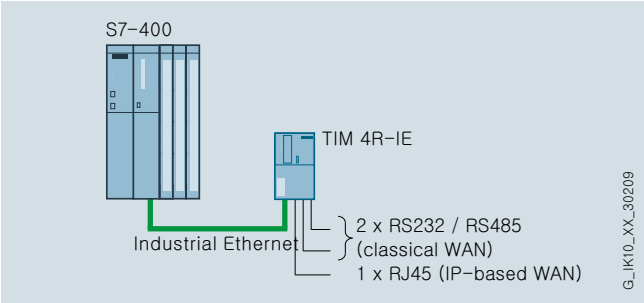

S7-400 with TIM 4R-IE connected via Industrial Ethernet

© Siemens AG 2014

Design (continued)

In the case of the TIM 4R, two conventional WANs can be connected by means of the two combined RS232/RS485 interfaces. The TIM 4R-IE has an additional connection for an IP-based network.

As on an S7-400, the control center PC (e.g. SINAUT ST7cc or ST7sc) is interfaced with the SINAUT telecontrol network via one or more TIM 4 modules. The two figures below show the alternatives with TIM 4R or TIM 4R-IE.

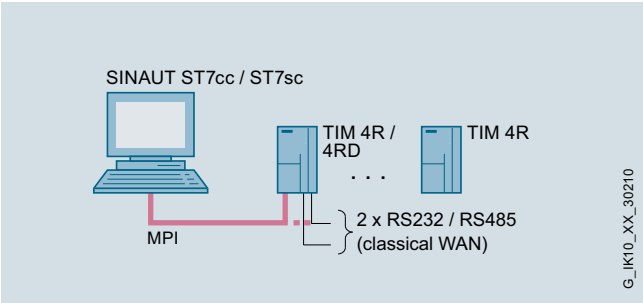

SINAUT ST7cc/ST7sc with one or more TIM 4R's on the MPI bus

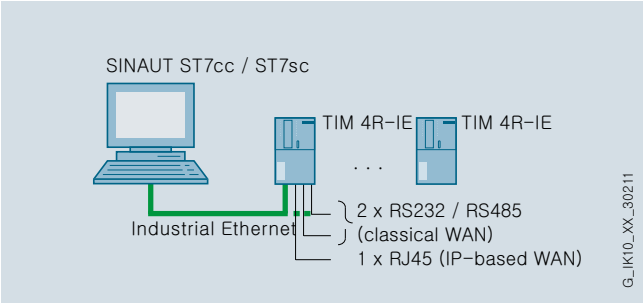

SINAUT ST7cc/ST7sc with one or more TIM 4R-IE's on the Industrial Ethernet

The synchronization of the TIM 4R-IE module clocks connected via Ethernet is performed by the control center PC (ST7cc or ST7sc). These TIMs then supply their SINAUT stations in turn.

If stations are connected by means of an IP-based network, the connection to the control center PC (ST7cc or ST7sc) may also be made directly, i.e. without any TIM 4R-IE on the PC. The SINAUT stations in this directly connected IP-based network are synchronized via the control center PC.

In the case of more complex IP-based networks, and above all when using a redundant control center, the use of a control center TIM 4R-IE is recommended, since this permits improved monitoring of network behavior and optimization of the connection resources of the PC.

© Siemens AG 2014

Overview

- SINAUT communications module TIM for SIMATIC S7-300 for use in a wide area network (WAN)
- IP communication via secure VPN (virtual private network) using the Internet
- Wireless communication via GPRS router, GPRS modem, or radio devices
- Wired communication via Ethernet, DSL, dialup modems or dedicated line modem
- Complete migration of existing wireless, dedicated line and dial-up technology to IP-based network
- Message frame memory for complete recording of data
- Simple configuration and operation without specialist IT knowledge

Benefits

get Designed for Industry

- Flexible option for connection to any IP-based or conventional WAN
- Economical station design and low connection costs due to GPRS connection with the MD720-3 and utilizing the S7-CPUs 312 and 312C
- No additional mobile phone service for fixed IP addresses or contracts for private GPRS networks with bidirectional data traffic are necessary, as the VPN is integrated in the ST7 system. No more expensive and complex VPN configuration by IT specialists.
- Saving of traveling costs due to cost-effective remote programming, diagnostics, control and monitoring via the Internet
- Reduction in time and costs thanks to quick and user-friendly configuration of connections and data to be transferred with the SINAUT configuring software and block library
- Reliable storage of important data. Storage of data message frames (max. 16 000) including time stamp on TIM if the communication path is faulty or a partner has failed and to reduce connection costs for the dial-up network.
- Protection of investment for existing SINAUT ST1 systems through the integration of the SIMATIC S7-300

Application

- Low-cost automation of water/wastewater networks with both complex and simple structures
- Control and monitoring of energy distribution systems and supply stations, such as oil, gas or district heating networks
- Preventive maintenance (condition monitoring) of globally distributed systems
- Monitoring of logistics and traffic control systems
- Connection of plants with basic or high-level security and availability requirements
- Use in hybrid networks with dialup, wireless, Ethernet or Internet communication

Design

The TIM 3V-IE offers all the advantages of the SIMATIC S7-300 design:

- Compact design
- 9-pin Sub-D connector with an RS232 interface for connection to a conventional WAN via an appropriate modem
- RJ45 socket for connection to Industrial Ethernet or an IP-based network;
  industry-standard design with additional sleeve for connecting the IE FC RJ45 Plug 180
- 2-pin plug-in terminal strip for connection of the 24 V DC external supply voltage
- Front LEDs for indicating the module status and the communication
- Simple installation;
  the TIM 3V-IE is mounted on the rail of the S7-300 and connected to the adjacent modules by means of the bus connectors supplied with the TIM. No slot rules apply.
- Can be operated in the expansion rack (ER) in conjunction with the IM 360/361
- Can be operated without a fan
- A battery backup or memory module are not required

© Siemens AG 2014

Function

- The TIM 3V-IE enables a SIMATIC S7-300 to exchange data with other SINAUT ST7 or ST1 stations via any SINAUT network. The important SINAUT property - saving data complete with a time stamp on the TIM in the event of an interrupted link or failure of the partner - is then available not only for conventional WANs, but also for IP-based networks. Important events, alarms, etc. are not lost and the integrity of information in control center system archives is assured.
- The TIM 3V-IE module is particularly suitable for configuring low-cost stations, but also allows a simple S7-300 control center to be implemented. The module cannot be used in a SINAUT node station or combined with other TIMs in a control center.
- The SINAUT TD7 software for the CPU (TD7onCPU) is now integrated in the TIM 3V-IE (TD7onTIM). This enables the smallest S7 CPUs 312 and 312C to be used, because in the most favorable situation, no CPU RAM is required any more for SINAUT. (This does not apply to communication with SINAUT ST1 partners or the transmission of text messages; in these cases, the SINAUT TD7 software must be used for the CPU (TD7onCPU).) One TIM 3V-IE can be used per S7-300 and one of the two interfaces (RS232 or RJ45) can be used for SINAUT communication (not both simultaneously).
  PG communication is possible at any time over the Ethernet interface.
- Message frame memory for up to 16 000 data message frames
- Up to eight S7 connections via IP-based networks

Controllable communication modules:

- Control of the GSM/GPRS modems MD720-3 in GSM or GPRS mode. In GPRS mode, simple 128-bit encryption via the MD720-3 (MSC-VPN tunnel protocol).
- Operation via SIMATIC NET Ethernet components with high IPsec security standard (e.g. GPRS router or SCALANCE S)
- Use of SCALANCE fiber-optic switches for spanning long distances
- Wireless transmission via IWLAN with SCALANCE W over medium distances
- Dedicated line modem MD2 for point-to-point, point-to-multi-point or line connections
- Wireless devices from various manufacturers, also for private mobile radio using the time slot method
- Analog dial-up modem MD3 for the analog telephone network or point-to-point dedicated lines

Integration

Connection to IP-based networks

In addition to the RS232 interface, the TIM 3V-IE also has an RJ45 socket. This is suitable for the connection of IP-based networks (WAN or LAN). Depending on the application, various types of data communication equipment can be connected such as:

- SCALANCE X switches for Twisted Pair cable or fiber-optic cables
- SCALANCE W (IWLAN) and Ethernet radio devices from various manufacturers
- SCALANCE M communication via mobile wireless networks
- GPRS/GSM modem MD720-3 for GPRS communication over mobile wireless networks
- Broadband systems such as OTN and PCM30

Configuration examples in IP-based networks

Connection via switches, e.g. SCALANCE X

Simple network structures can be built up in this manner, or complex ones that comprise a combination of star, line and ring structures. At the control desk (e.g. ST7cc) the use of a TIM 4R-IE is not necessary, i.e. the connection is made directly to the Ethernet interface of the PC.

Wireless with Ethernet

When wired Ethernet communication is not possible, a wireless network can be installed using commercially available Ethernet wireless modems or with IWLAN. In order to decouple the networks, the connection in the control center can be made via a TIM 4R-IE, as in the example, or directly to the Ethernet interface of the PC.

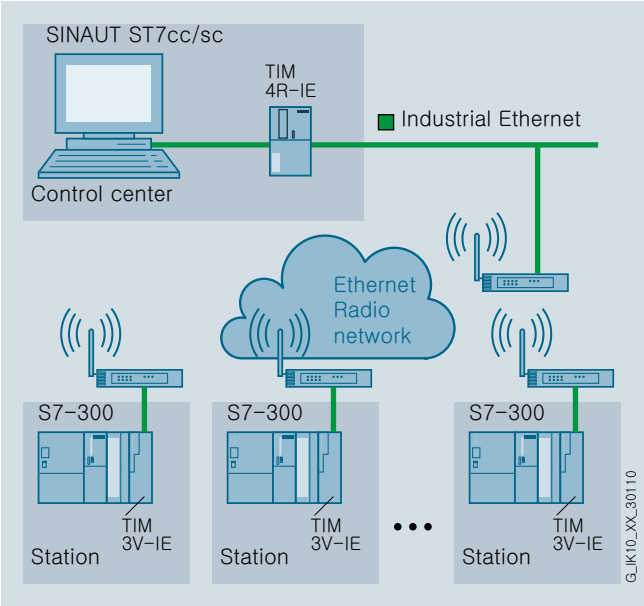

© Siemens AG 2014

Integration (continued)

Transmission over DSL

The continuously falling flat rates for DSL connections make this medium an interesting alternative to a leased line or also a telephone connection. DSL routers must be used in the station and control center, preferably routers in combination with SCALANCE S (VPN), in order to establish secure connections using VPN tunnels. A permanent IP address is recommended for DSL connection of the control center, the IP addresses of the stations can be dynamically assigned.

In order to decouple the networks, the connection in the control center can be made via a TIM 4R-IE or directly to the Ethernet interface of the PC.

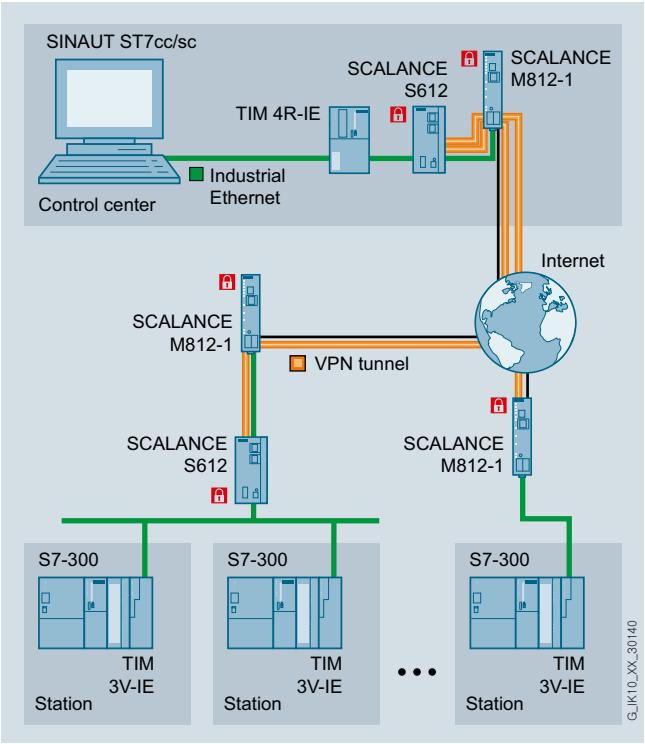

Transmission over the GPRS mobile wireless service and the Internet

Continuous coverage of GPRS in many countries as well as inexpensive volume tariffs allow wireless connection of stations to the control desk without the need to create a separate radio network for this purpose. The stations can be either stationary or mobile.

The wireless connection is constantly online and therefore has the same properties as a dedicated line: Data changes can be transferred immediately and station or connection failures are detected at an early stage.

GPRS with simple stations:

A TIM 3V-IE is used in the stations together with the GSM/GPRS modem MD720-3 or a TIM3V-IE Advanced with DSL router. The simple VPN protocol MSC of the MD720-3 permits communication via GPRS access and Internet and via routers with NAT or NAPT conversion. The MSC tunnel connections correspond to dedicated lines that are permanently maintained with extremely low volumes of data. When using the MSC tunnel, a TIM 4R-IE must be used as a header station at which the tunnels end. The parameter setting of the MSC connection is performed in the SINAUT ST7 configuration software.

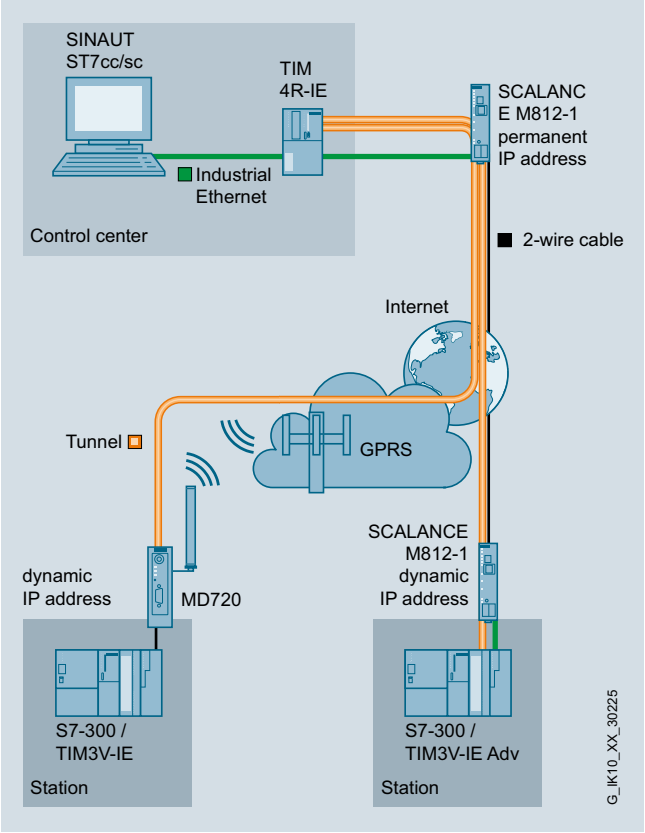

© Siemens AG 2014

Integration (continued)

GPRS/UMTS with complex stations and enhanced security:

The EGPRS router SCALANCE M874-2, which is a combination of high-speed GPRS VPN router with enhanced data security (IPsec protocol) and firewall, is used in networked stations. In the stations, other devices connected via Industrial Ethernet to the SCALANCE M874-2 for diagnosis and parameterization can be accessed from the control center.

For higher data rates, in place of the GRPS router SCALANCE M874-2, the UMTS router SCALANCE M874-3 can be implemented for use of the UMTS mobile wireless network.

The control desk PC must be constantly accessible from the GPRS network. It must therefore be directly connected to the GPRS provider using a dedicated line or permanently to the Internet, e.g. by means of DSL. A SCALANCE S612 or S623 Security Module performs the firewall function at the control center and represents the remote stations for the VPN connections of the GPRS stations. The VPN is configured with the SIMATIC NET "Security Configuration Tool" and requires no special IT knowledge.

The IP address of the control center should preferably be permanent; those of the stations can be dynamically assigned.

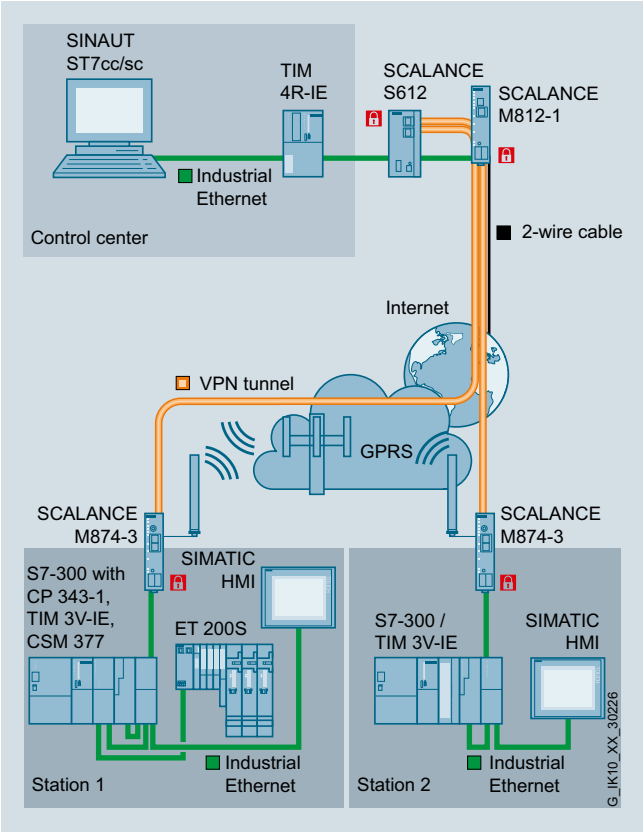

Secure data transmission with SCALANCE M industrial routers, SCALANCE S security modules and Internett

Connection to a conventional WAN

Connection to a conventional WAN is via the floating RS232 interface of the TIM 3V-IE module, via which various modems or data communication equipment can be connected, depending on the application, such as:

- Dedicated line modem MD2 for point-to-point, point-to-multi-point or line connections
- Wireless devices from various manufacturers, also for private mobile radio using the time slot method
- Analog dial-up modem MD3 for the analog telephone network or point-to-point dedicated lines
- GSM modem MD720-3 for access to the mobile radio network via dial-up lines

Configuration examples in the conventional WAN

Use of the TIM 3V-IE in the mobile radio network (GSM)

The GSM modem MD720-3 is used for this purpose.
At the control desk (ST7cc or ST7sc), it is connected through a TIM 4 module (e.g. TIM 4R-IE) that is connected to the PC via the Industrial Ethernet. The connections between the GSM modems are set up via GSM dial-up lines.

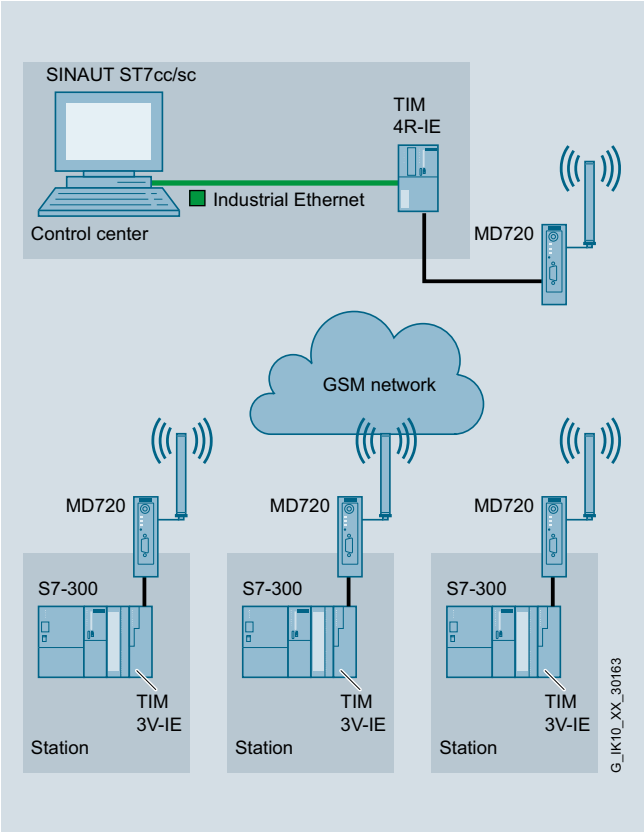

Use of the TIM 3V-IE in the mobile radio network (GSM) with MD720 MODEM

© Siemens AG 2014

Technical specifications (continued)

Use of the TIM 3V-IE in a private radio network

The radio network must be installed in accordance with the radio equipment that is approved in the relevant country (radio equipment is not included in the SINAUT product range). At the control desk (ST7cc or ST7sc), it is connected through a TIM 4 module (e.g. TIM 4R) that is connected to the PC via MPI. If a radio network is set up with time slot procedure, the TIM 4RD with DCF77 radio clock receiver must be used at the control desk.

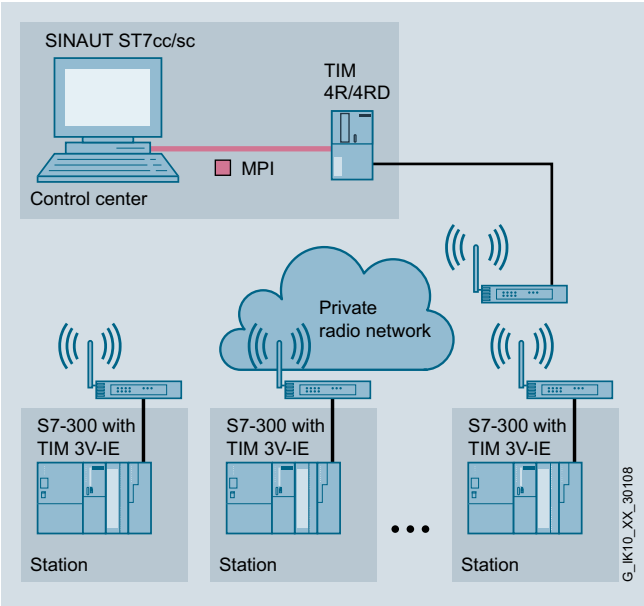

Technical specifications

Article No.	6NH7800-3BA00
Product-type designation	**TIM 3V-IE**
Transmission rate	
• for Industrial Ethernet	10 … 100 Mbit/s
• in accordance with RS 232	50 … 38 400 bit/s
Interfaces	
Number of interfaces according to Industrial Ethernet	1
Number of electrical connections	
• for external data transmission in accordance with RS 232	1
• for power supply	1
Design of electrical connection	
• the Industrial Ethernet Interface	RJ45 port
• at interface 1 for external data transmission	9-pin D-sub male connector (RS232)
• at interface 2 for external data transmission	-
• for power supply	2-pin, pluggable terminal strip
design of the removable storage C-PLUG	No
Supply voltage, current consumption, power loss	
Type of supply voltage	DC
Supply voltage	24 V
• minimum	20.4 V
• maximum	28.8 V
Consumed current	
• from backplane bus at 24 V for DC maximum	0.2 A
• from external supply voltage at 24 V with DC maximum	0.2 A
Resistive loss	5.8 W

Article No.	6NH7800-3BA00
Product-type designation	**TIM 3V-IE**
Product expansion optional backup battery	No
Type of battery	-
Backup current	
• typical	-
• maximum	-
Permitted ambient conditions	
Ambient temperature	
• during operating	0 … 60 °C
• during storage	-40 … +70 °C
• during transport	-40 … +70 °C
Relative humidity at 25 °C without condensation during operating maximum	95 %
Protection class IP	IP20
Design, dimensions and weight	
Module format	Compact module S7-300 single width
Width	40 mm
Height	125 mm
Depth	120 mm
Net weight	0.25 kg
Product properties, functions, components general	
Number of modules note	Number of TIMs per S7-300: 1
Cable length	
• with RS 232 interface maximum	6 m
• with RS 485 interface maximum	-

© Siemens AG 2014

Technical specifications (continued)

Article No.	6NH7800-3BA00
Product-type designation	**TIM 3V-IE**
Performance data	
Performance data S7 communication	
Number of possible connections for S7 communication	
• maximum	8
• with PG connections maximum	2
• with OP connections maximum	8
• note	-
Service	
• SINAUT ST7 through S7 communication	Yes
• PG-/OP-communication	Yes
Performance data multi-protocol mode	
Number of active connections with multiprotocol mode	12
Performance data telecontrol	
Suitability for use	
• node station	No
• substation	Yes
• control center	No
• note	RS232 and Industrial Ethernet cannot be used simultaneously
Protocol is supported	
• TCP/IP	Yes
• DNP3	No
• SINAUT ST1 protocol	Yes
• SINAUT ST7 protocol	Yes
Product function data buffering if connection is aborted	Yes
• note	16 000 data messages
Storage capacity	
• of user memory of S7 CPU	
- for TD7onCPU mode data blocks on CPU required	20 Kibyte
- for TD7onTIM mode data blocks on TIM required	0 Kibyte
• note	TD7onCPU: at least 20 KB, actual requirement determined by data volume and functional scope TD7onTIM: 0 bytes in most favorable case
Product property retentive message frame memory	No
Transmission format	
• for SINAUT ST1 protocol with polling 11 bit	Yes
• for SINAUT ST1 protocol with spontaneous 10 bit or 11 bit	Yes
• for SINAUT ST7 protocol with multi-master polling 10 bit	Yes
• for SINAUT ST7 protocol with polling or spontaneous 10 bit or 11 bit	Yes

Article No.	6NH7800-3BA00
Product-type designation	**TIM 3V-IE**
Operating mode for scanning of data transmission	
• with dedicated line/radio link	
- with SINAUT ST1 protocol	Polling, polling with time slot procedure
- with SINAUT ST7 protocol	Polling, polling with time slot procedure, multi-master polling with time slot procedure
• with dial-up network	
- with SINAUT ST1 protocol	spontaneous
- with SINAUT ST7 protocol	spontaneous
Hamming distance	
• for SINAUT ST1 protocol	4
• for SINAUT ST7 protocol	4
Product functions management, configuration	
Configuration software	
• required	SINAUT ST7 ES
• for CPU configuring required SINAUT TD7 block library for CPU	Yes
• for PG configuring required SINAUT ST7 configuration software for PG	Yes
Storage location of TIM configuration data	On the TIM
Product functions security Virtual Private Network	
Suitability for installation Virtual Private Network	Yes
Product function	
• password protection for VPN	Yes
• MSC client via GPRS modem with MSC capability	Yes
Protocol is supported MSC protocol	No
Number of possible connections	
• as MSC client with VPN connection	1
• as MSC server with VPN connection	0
Protocol with Virtual Private Network MSC is supported	-
Key length for MSC with Virtual Private Network	128 bit
Type of authentication with Virtual Private Network PSK	Yes
Operating mode Virtual Private Network note	VPN operation as MSC client with MSC protocol and password protection only possible in conjunction with GPRS modem with MSC capability
Product functions Time	
Product component Hardware real-time clock	-
Product property battery-backed hardware real-time clock	-
Accuracy of hardware real-time clock per day maximum	-

© Siemens AG 2014

Ordering data

	Article No.
TIM 3V-IE communications module With an RS 232 interface for SINAUT communication via a conventional WAN or an IP-based network (WAN or LAN)	**6NH7800-3BA00**
SINAUT Engineering Software V5.4 On CD-ROM, comprising • SINAUT Engineering Software V5.4 for the PG • SINAUT TD7 block library • Electronic manual in German and English	**6NH7997-0CA54-0AA0**
Accessories	
IE FC TP Standard Cable GP 2 x 2 (Type A) 4-core, shielded TP installation cable for connection to IE FC Outlet RJ45/IE FC RJ45 Plug; PROFINET-compatible; with UL approval; sold by the meter; max. length 1 000 m, minimum order quantity 20 m	**6XV1840-2AH10**
IE FC RJ45 Plug 180 RJ45 plug-in connector for Industrial Ethernet with a rugged metal housing and integrated insulation displacement contacts for connecting Industrial Ethernet FC installation cables; with 180° cable outlet; for network components and CPs/CPUs with Industrial Ethernet interface	
• 1 pack = 1 unit	**6GK1901-1BB10-2AA0**
• 1 pack = 10 units	**6GK1901-1BB10-2AB0**
• 1 pack = 50 units	**6GK1901-1BB10-2AE0**

	Article No.
IE FC Stripping Tool Preadjusted stripping tool for fast stripping of the Industrial Ethernet FC cables	**6GK1901-1GA00**
Connecting cable For connecting a TIM (RS 232) with a SINAUT ST7 MD2, MD3 or MD4 (RS 232) modem; cable length 1.5 m	**6NH7701-4AL**
Connecting cable For connecting a TIM (RS 232) with the GSM modem MD720-3; also suitable for third-party modems or radio equipment with standard RS 232 interface; cable length 2.5 m	**6NH7701-5AN**
Connecting cable with one end open for connecting a TIM (RS 232) to a third-party modem or radio unit (RS 232); cable length 2.5 m	**6NH7701-4BN**
Connecting cable For connecting two TIM modules via their RS 232 interface without modems ("null modem"); cable length 6 m	**6NH7701-0AR**

© Siemens AG 2014

Overview

- SINAUT communications module TIM for SIMATIC S7-300 for use in wide area network (WAN) as station, node station, and control center
- IP communication via secure VPN (virtual private network) using the Internet
- Wireless communication via GPRS router, GPRS modem or radio devices
- Wired communication via Ethernet, DSL, dialup modems or dedicated line modem
- Complete migration of existing wireless, dedicated line and dial-up technology to IP-based network
- Message frame memory for complete recording of data and support of redundant communication paths
- Simple configuration and operation without specialist IT knowledge

Benefits

get Designed for Industry

- Flexible option for connection to any conventional or IP-based WAN
- Low-cost station setup by means of direct connection to DSL router or GPRS via MD720-3 modem and use of the S7-CPUs 312 and 312C, because the SINAUT TD7 CPU software is integrated in the TIM 3V-IE Advanced.
  (This does not apply to communication with SINAUT ST1 partners and to the transmission of text messages; in this case the SINAUT TD7 software for the CPU (TD7onCPU) must be used, i.e. this software can still be used together with the TIM 3V-IE Advanced.)
- No additional mobile phone service for fixed IP addresses or contracts for private GPRS networks with bidirectional data traffic are necessary, as the VPN is integrated in the ST7 system. No more expensive and complex VPN configuration by IT specialists.
- Saving of traveling and maintenance costs due to cost-effective remote programming, diagnostics, control and monitoring via the Internet
- Reduction in time and costs thanks to quick and user-friendly configuration of connections and data to be transferred with the SINAUT configuring software and block library
- High availability of the connections thanks to possible redundant design of the communication paths (parallel operation of WAN networks supported on RJ45 and RS232 interface of the TIM 3V-IE Advanced)
- Reliable storage of important data. Storage of data message frames (max. 32 000) including time stamp on TIM if the communication path is faulty or a partner has failed and to reduce connection costs for the dial-up network.
- Protection of investment for existing SINAUT ST1 systems through the integration of the SIMATIC S7-300

Application

- Low-cost automation of water/wastewater networks with both complex and simple structures
- Control and monitoring of energy distribution systems and supply stations, such as oil, gas or district heating networks
- Preventive maintenance (condition monitoring) of globally distributed systems
- Monitoring of logistics and traffic control systems
- Connection of plants with basic or high-level security and availability requirements
- Use in hybrid networks with dialup, wireless, Ethernet or Internet communication

Design

The TIM 3V-IE Advanced offers all the advantages of the SIMATIC S7-300 design:

- Compact construction;
  single standard width of the SIMATIC S7-300 SM modules
- 9-pin Sub-D connector with an RS232 interface for connection to a conventional WAN via an appropriate modem
- RJ-45 socket for connection to Industrial Ethernet; or an IP-based network;
  industrial design with additional sleeve for inserting the IE FC RJ45 Plug 180
- 2-pin plug-in terminal strip for connection of the 24 VDC external supply voltage
- Front LEDs for indicating the module status and the communication
- Easy to mount;
  the TIM 3V-IE Advanced is mounted on the S7-300 mounting rail and connected to adjacent modules by means of the bus connectors. No slot rules apply.
- Can be operated in the expansion rack (ER) in conjunction with the IM 360/361
- Can be operated without a fan
- A battery backup or memory module are not required

© Siemens AG 2014

Function

- The TIM 3V-IE Advanced enables one or more SIMATIC S7-300 or control center PCs (e.g. SINAUT ST7cc or ST7sc) to exchange data with other SINAUT ST7 or ST1 stations via any one or two SINAUT networks. The two networks can also be operated in redundant combination. The important SINAUT property - saving data complete with a time stamp on the TIM in the event of an interrupted link or failure of the partner - is then available not only for conventional WANs, but also for IP-based networks. Important events, alarms, etc. are not lost and the integrity of information in control center system archives is assured.
- For setting up more complex control centers or node stations, several TIM 3V-IE Advanced modules can be used for each S7-300. A combination with additional TIM 3 and TIM 4 versions in the same rack is possible here.
- SINAUT ST7 and thus also the TIM 3V-IE Advanced are designed for data transmission via the widest range of WANs or combinations of WANs. Mixed networks comprising classical SINAUT WAN networks (dedicated line, wireless, dial-up network) and IP-based networks (fiber optic, DSL, GPRS, Internet etc.) can be configured uniformly using SINAUT, which saves both time and money.
- For communication via the Internet, the integrated MSC-VPN tunnel protocol for direct access to DSL routers can be used (MSC client). For communication via GPRS, either the router SCALANCE M874-2 can be connected to the IE interface (VPN IPsec) or the GSM/GPRS modem MD720-3 (MSC-VPN) to the RS232 interface.
- PG communication is possible parallel to data communication at any time
- Several TIM 3V-IE Advanced can be used per S7-300
- Message frame memory for up to 32 000 data message frames
- Up to twenty S7 connections via IP-based networks

Controllable communication modules:

- Control of the GSM/GPRS modems MD720-3 in GSM or GPRS mode. In the GPRS mode simple 128-bit encryption via the MD720-3 (MSC-VPN tunnel protocol)
- Operation via SIMATIC NET Ethernet components with high IPsec security standard (e.g. GPRS router or SCALANCE S)
- Direct operation on a DSL router by means of MSC tunnel protocol
- Use of SCALANCE fiber-optic switches for spanning long distances
- Wireless transmission via IWLAN with SCALANCE W over medium distances
- Dedicated line modem MD2 for point-to-point, point-to-multi-point or line connections
- Wireless devices from various manufacturers, also for private mobile radio using the time slot method
- Analog dial-up modem MD3 for the analog telephone network or point-to-point dedicated lines
- ISDN modem MD4 for connecting to the ISDN network

Integration

Connection to IP-based networks

In addition to the RS232 interface, the TIM 3V-IE Advanced also has an RJ45 socket. This is suitable for the connection of IP-based networks (WAN or LAN). Depending on the application, various types of data communication equipment can be connected such as:

- SCALANCE X switches for Twisted Pair cable or fiber-optic cables
- SCALANCE W (IWLAN) and Ethernet radio devices from various manufacturers
- EDGE router SCALANCE M874-2 for GPRS communication and EGPRS (Edge) over mobile wireless networks
- SCALANCE M for communication via mobile wireless networks
- GPRS/GSM modem MD720-3 for GPRS communication over mobile wireless networks
- DSL router and SCALANCE S for VPN (IPsec)
- DSL router directly by means of MSC-VPN tunnel protocol integrated in the TIM
- Broadband systems such as OTN and PCM30

Configuration examples with TIM 3V-IE Advanced

Use as a station

The TIM 3V-IE Advanced can be used as a station like a TIM 3V-IE. In addition, transmission is possible via the direct connection of the TIM to a DSL router (MSC tunnel).

Use the MSC tunnel protocol (MSC client) integrated in the TIM 3V-IE Advanced to operate a connection via Industrial Ethernet and a DSL router to a TIM 4R-IE that terminates the MSC tunnel protocol.

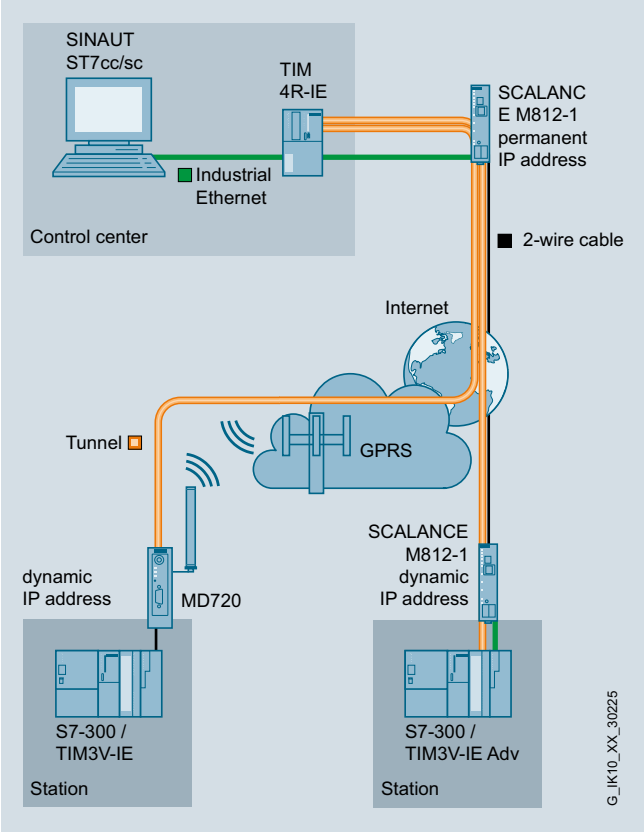

© Siemens AG 2014

Integration (continued)

Use in a node station

When used in a node station, TIM 3V-IE Advanced can, for example, exchange data over its RS232 interface over a radio network with the lower-level stations. It is then connected to the control desk over the RJ45 interface, e.g. over a fiber-optic cable, that is connected through SCALANCE X switches.
In this configuration, data can be exchanged between each of the SINAUT stations regardless of which network they are situated in.

In this case, in order to disconnect the networks, the connection in the control center can be made via a TIM 4R-IE or, as in the example, directly to the Ethernet interface of the PC.

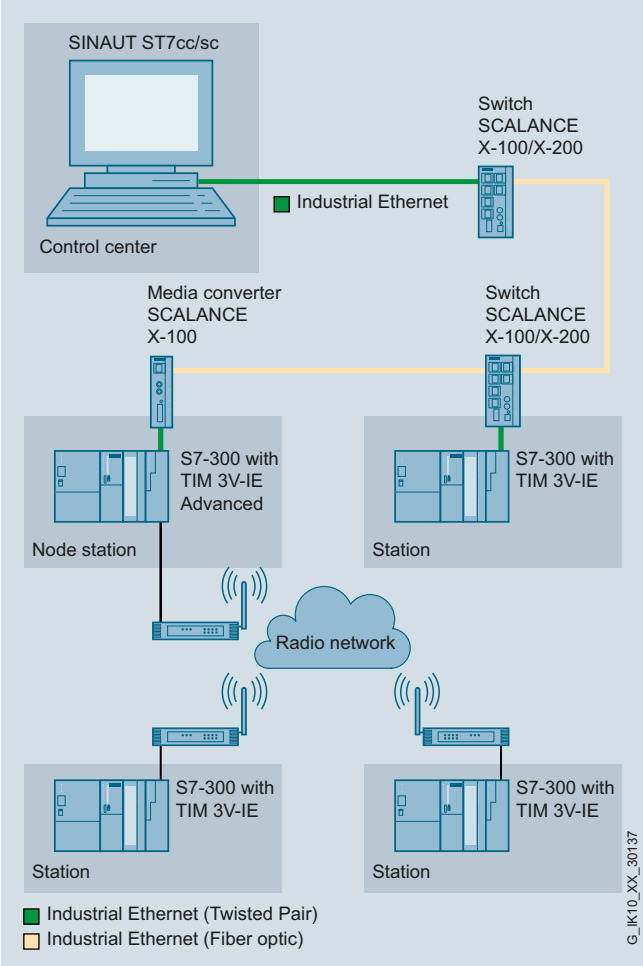

Redundant transmission paths

Using TIM 3V-IE Advanced, a station can be connected to the control desk over redundant paths. The TIM 3V-IE Advanced is used for this purpose both in the station and in the control center. The example includes a combination of fiber-optic cables and radio paths as redundant paths. The two TIMs coordinate data transmission: It takes place normally over the main path and only if it fails over the standby path. When the main path is restored, changeover back to this path is performed automatically.

The TIM 3V-IE Advanced in the control center has access to the MPI interface of the S7-300-CPU via the backplane bus, by which the TIM communicates with the control desk PC (e.g. ST7cc). Note that only certain types of CPU can be considered for this application.
A TIM 4R-IE can be used in the control center as a replacement for the TIM 3V-IE Advanced. Without a S7-300-CPU, this TIM is connected to the control desk PC via one of the two Ethernet ports.

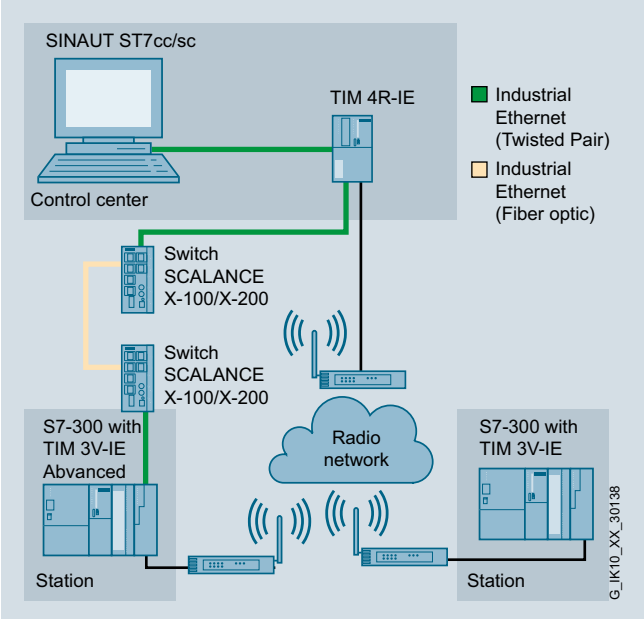

Note:

Use of the MPI port of the local CPU is possible with the following types of CPU: all versions of the CPUs 312, 312C, 313C, 314 and 314C, the CPUs 315-2 DP and 315F-2 DP.

© Siemens AG 2014

Integration (continued)

Use in a control center

The TIM 3V-IE Advanced is also suitable for configuring a control center that comprises more than one TIM. In the following example, the TIM 3V-IE Advanced is combined with a TIM 4R-IE. Both TIMs are connected via the MPI with the CPU inserted in the rack. Both TIMs process data communication with the stations in their own networks and route the data via Industrial Ethernet to the PC.

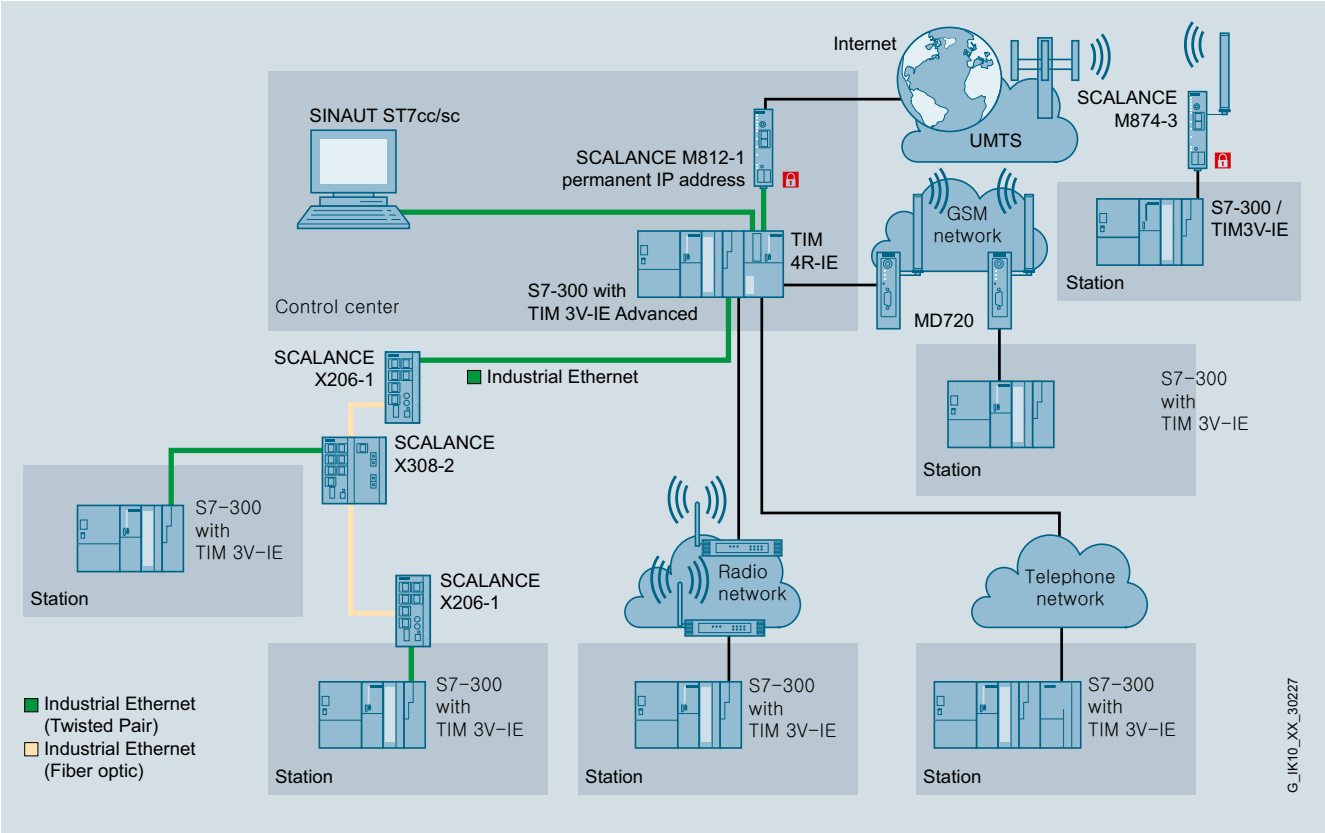

Connection to a conventional WAN

Connection to a conventional WAN is via the floating RS232 interface of the TIM 3V-IE Advanced module, via which various modems or data communication equipment can be connected, depending on the application. The RS232 interface can then be operated parallel to the Industrial Ethernet interface.

© Siemens AG 2014

Technical specifications

Article No.	6NH7800-3CA00
Product-type designation	**TIM 3V-IE Advanced**
Transmission rate	
Transfer rate	
• for Industrial Ethernet	10 … 100 Mbit/s
• in accordance with RS 232	50 … 38 400 bit/s
Interfaces	
Number of interfaces according to Industrial Ethernet	1
Number of electrical connections	
• for external data transmission in accordance with RS 232	1
• for power supply	1
Design of electrical connection	
• the Industrial Ethernet Interface	RJ45 port
• at interface 1 for external data transmission	9-pin D-sub male connector (RS232)
• at interface 2 • for external data transmission	-
• for power supply	2-pin, pluggable terminal strip
design of the removable storage C-PLUG	No
Supply voltage, current consumption, power loss	
Type of supply voltage	DC
Supply voltage	24 V
• minimum	20.4 V
• maximum	28.8 V
Consumed current	
• from backplane bus at 24 V for DC maximum	0.2 A
• from external supply voltage at 24 V with DC maximum	0.2 A
Resistive loss	5.8 W
Product expansion optional backup battery	No
Type of battery	-
Backup current	
• typical	-
• maximum	-
Permitted ambient conditions	
Ambient temperature	
• during operating	0 … 60 °C
• during storage	-40 … +70 °C
• during transport	-40 … +70 °C
Relative humidity at 25 °C without condensation during operating maximum	95 %
Protection class IP	IP20
Design, dimensions and weight	
Module format	Compact module S7-300 single width
Width	40 mm
Height	125 mm
Depth	120 mm
Net weight	0.25 kg

Article No.	6NH7800-3CA00
Product-type designation	**TIM 3V-IE Advanced**
Product properties, functions, components general	
Number of modules note	Number of TIMs per S7-300: multiple, number depends on the connection resources of the S7-300 CPU
Cable length	
• with RS 232 interface maximum	6 m
• with RS 485 interface maximum	-
Performance data	
Performance data S7 communication	
Number of possible connections for S7 communication	
• maximum	24
• with PG connections maximum	4
• with OP connections maximum	20
• note	-
Service	
• SINAUT ST7 through S7 communication	Yes
• PG-/OP-communication	Yes
Performance data multi-protocol mode	
Number of active connections with multiprotocol mode	24
Performance data telecontrol	
Suitability for use	
• node station	Yes
• substation	Yes
• control center	Yes
• note	
Protocol is supported	
• TCP/IP	Yes
• DNP3	No
• SINAUT ST1 protocol	Yes
• SINAUT ST7 protocol	Yes
Product function data buffering if connection is aborted	Yes
• note	32 000 data messages
Storage capacity	
• of user memory of S7 CPU	
- for TD7onCPU mode data blocks on CPU required	20 Kibyte
- for TD7onTIM mode data blocks on TIM required	0 Kibyte
• note	TD7onCPU: at least 20 KB, actual requirement determined by data volume and functional scope TD7onTIM: 0 bytes in most favorable case
Product property retentive message frame memory	No

7

© Siemens AG 2014

Technical specifications (continued)

Article No.	6NH7800-3CA00
Product-type designation	**TIM 3V-IE Advanced**
Transmission format	
• for SINAUT ST1 protocol with polling 11 bit	Yes
• for SINAUT ST1 protocol with spontaneous 10 bit or 11 bit	Yes
• for SINAUT ST7 protocol with multi-master polling 10 bit	Yes
• for SINAUT ST7 protocol with polling or spontaneous 10 bit or 11 bit	Yes
Operating mode for scanning of data transmission	
• with dedicated line/radio link	
- with SINAUT ST1 protocol	Polling, polling with time slot procedure
- with SINAUT ST7 protocol	Polling, polling with time slot procedure, multi-master polling with time slot procedure
• with dial-up network	
- with SINAUT ST1 protocol	spontaneous
- with SINAUT ST7 protocol	spontaneous
Hamming distance	
• for SINAUT ST1 protocol	4
• for SINAUT ST7 protocol	4
Product functions management, configuration	
Configuration software	
• required	
• for CPU configuring required SINAUT TD7 block library for CPU	Yes
• for PG configuring required SINAUT ST7 configuration software for PG	Yes
Storage location of TIM configuration data	On the TIM

Article No.	6NH7800-3CA00
Product-type designation	**TIM 3V-IE Advanced**
Product functions security Virtual Private Network	
Suitability for installation Virtual Private Network	Yes
Product function	
• password protection for VPN	Yes
• MSC client via GPRS modem with MSC capability	Yes
Protocol is supported MSC protocol	Yes
Number of possible connections	
• as MSC client with VPN connection	1
• as MSC server with VPN connection	0
Protocol with Virtual Private Network MSC is supported	TCP/IP
Key length for MSC with Virtual Private Network	128 bit
Type of authentication with Virtual Private Network PSK	Yes
Operating mode Virtual Private Network note	-
Product functions Time	
Product component Hardware real-time clock	-
Product property battery-backed hardware real-time clock	-
Accuracy of hardware real-time clock per day maximum	-

© Siemens AG 2014

Ordering data

	Article No.
TIM 3V-IE Advanced communications module With an RS 232 interface and an RJ45 interface for SINAUT communication via a conventional WAN and an IP-based network (WAN or LAN)	**6NH7800-3CA00**
SINAUT Engineering Software V5.4 On CD-ROM, comprising • SINAUT ST7 Engineering Software V5.4 for the PG • SINAUT TD7 block library • Electronic manual in German and English	**6NH7997-0CA54-0AA0**
Accessories	
IE FC TP Standard Cable GP 2 x 2 (Type A) 4-core, shielded TP installation cable for connection to IE FC Outlet RJ45/IE FC RJ45 Plug; PROFINET-compatible; with UL approval; sold by the meter; max. length 1 000 m, minimum order quantity 20 m	**6XV1840-2AH10**
IE FC RJ45 Plug 180 RJ45 plug-in connector for Industrial Ethernet with a rugged metal housing and integrated insulation displacement contacts for connecting Industrial Ethernet FC installation cables; with 180° cable outlet; for network components and CPs/CPUs with Industrial Ethernet interface	
• 1 pack = 1 unit	**6GK1901-1BB10-2AA0**
• 1 pack = 10 units	**6GK1901-1BB10-2AB0**
• 1 pack = 50 units	**6GK1901-1BB10-2AE0**

	Article No.
IE FC Stripping Tool Preadjusted stripping tool for fast stripping of the Industrial Ethernet FC cables	**6GK1901-1GA00**
Connecting cable For connecting a TIM (RS 232) with a SINAUT ST7 MD2, MD3 or MD4 (RS 232) modem; cable length 1.5 m	**6NH7701-4AL**
Connecting cable For connecting a TIM (RS 232) with the GSM modem MD720-3; also suitable for third-party modems or radio equipment with standard RS 232 interface; cable length 2.5 m	**6NH7701-5AN**
Connecting cable with one end open for connecting a TIM (RS 232) to a third-party modem or radio unit (RS 232); cable length 2.5 m	**6NH7701-4BN**
Connecting cable For connecting two TIM modules via their RS 232 interface without modems ("null modem"); cable length 6 m	**6NH7701-0AR**

© Siemens AG 2014

Overview

- SINAUT communications module TIM with four interfaces for SIMATIC S7-300 or as self-contained unit for the S7-400 for use in the wide area network (WAN)
- For universal use in a SINAUT station, node station and control center
- Internet communication via integrated MSC-VPN tunnel with direct connection to DSL router or operation via IPsec VPN with additional SIMATIC NET components
- Wireless communication via GPRS router, GPRS modem, or radio devices
- Wired communication via Ethernet, DSL, dialup modems or dedicated line modem
- Complete migration of existing wireless, dedicated line and dial-up technology to IP-based network
- Message frame memory for complete recording of data and support of redundant communication paths
- Simple configuration and operation without specialist IT knowledge

Benefits

get Designed for Industry

- Protection of investment by combining existing conventional networks with IP-based networks by means of flexible options for connection of up to four SINAUT networks
- Low-cost construction of the control center by direct connection as independent device to a DSL router, made possible by the integrated MSC-VPN protocol
- No additional mobile phone service for fixed IP addresses or contracts for private GPRS networks with bidirectional data traffic are necessary, as the VPN is integrated in the ST7 system. No more expensive and complex VPN configuration by IT specialists.
- High availability of the connections due to possible redundant design of the communication paths
- Reliable storage of important data. Storage of data message frames (approx. 56 000) including time stamp on TIM in the case of communication path malfunction or power failure
- Saving of time and money through fast and user-friendly configuration of the connections, as well as through remote programming and diagnostics (PG routing) parallel to the SINAUT data transmission via the WAN or Internet connection
- Easy maintenance through replacement of modules without PG

Application

- Use as self-contained central station for the low-cost automation of water/wastewater networks with both complex and simple structures
- Control and monitoring of energy distribution systems and supply stations, such as oil, gas or district heating networks
- Preventive maintenance (condition monitoring) of globally distributed systems
- Monitoring of logistics and traffic control systems
- Connection of plants with basic or high-level security and availability requirements
- Use in hybrid networks with dialup, wireless, Ethernet or Internet communication

Design

The TIM 4R-IE offers all the advantages of the SIMATIC S7-300 design:

- Compact construction;
  double standard width of SIMATIC S7-300 SM modules
- Two 9-pin Sub-D connectors with a combined RS 232/RS 485 interface for connection to a conventional WAN via an appropriate modem
- Two RJ45 sockets for connecting to Industrial Ethernet or a IP-based network; designed for industry with additional fixing collars for connecting the IE FC RJ45 Plug 180
- 2-pin plug-in terminal strip for connection of the 24 VDC external supply voltage
- Front LEDs for indicating the module status and the communication
- Easy to mount;
  the TIM is mounted to an S7-300-mounting rail;
  if integrated as a CP into an S7-300 it is connected to adjacent modules by means of the bus connector supplied with the TIM. No slot rules apply. As a standalone device, it is linked via one of its Ethernet interfaces with one or more S7-400 CPUs or with one or more control center PCs.
- Can be operated in the expansion rack (ER) in conjunction with the IM 360/361
- Can be operated without a fan
- A battery backup or memory module can be fitted as an option

© Siemens AG 2014

Function

The TIM 4R-IE can be used as a standalone device, i.e. it is fully functional even without S7-300-CPU. In this stand-alone mode, the TIM is especially suitable as a SINAUT communications processor for the control desk PC (e.g. SINAUT ST7cc or ST7sc) or for a SIMATIC S7-400. The TIM is connected to the PC or S7-400 via one of its two Ethernet interfaces. If the control desk is redundantly designed or if an S7-400 is additionally available there as a higher-level controller, then the TIM performs the SINAUT communication with the stations for all these devices connected to the local Ethernet.

The TIM 4R-IE can also be built into a SIMATIC S7-300 as a CP, e.g. if these devices require redundant transmission paths there or function as node stations at which more than two networks must be merged.

All the devices mentioned can exchange data with other SINAUT ST7 or ST1 partners with the aid of the TIM 4R-IE and specifically via as many as four SINAUT networks that can also be operated in any redundant combination.

The important SINAUT property - saving data complete with a time stamp on the TIM in the event of an interrupted link or failure of the partner - is then available not only for conventional WANs, but also for IP-based networks. Important events, alarms, etc. are not lost and the integrity of information in control center system archives is assured. Additional security is offered by the optional backup battery of the TIM 4R-IE which prevents the loss of saved data message frames if the 24 V supply fails.

For setting up more complex control centers or node stations, several TIM 4R-IE modules can be used. Combinations with TIM 3V-IE Advanced and TIM 3 and other TIM 4 versions are also possible.

As a communication module for the control desk PC, the TIM reduces the number of S7 connections that the PC would otherwise have to maintain when directly linked to the stations via an IP-based network, to just one (1) connection. In addition, the TIM then separates the local Ethernet from the IP-based network to the stations. Only SINAUT and PG communication with the stations is allowed through. This prevents unnecessary traffic in the WAN which is often not broadband.

A TIM 4R-IE that is used at a redundant control desk reduces the data volume in a WAN and thus it reduces the costs for networks with volume tariffs, e.g. GPRS. If stations were connected directly to the redundant control desk (without central TIM 4R-IE), they would send each frame twice in order to send data to both control desk PCs. In the case of a control center TIM 4R-IE, the stations only send their message frames once. The doubling of the message frames for supplying both PCs is then performed by the control center TIM 4R-IE.

For data transmission via conventional WANs, the TIM 4R-IE has other, special properties that predetermine its use as a "control center" TIM.

SINAUT ST7 and thus also the TIM 4R-IE are designed for data transmission via the widest range of WANs or combinations of WANs. Mixed networks comprising classical SINAUT WAN networks (dedicated line, wireless, dial-up network) and IP-based networks (fiber optic, DSL, GPRS, Internet etc.) can be configured uniformly using SINAUT, which saves both time and money.

For communication via the Internet, the integrated MSC-VPN tunnel protocol for direct access to DSL routers can be used. The TIM 4R-IE can operate here as an MSC server or MSC client. For communication via GPRS, either the router SCALANCE M874-2 can be connected to the Industrial Ethernet interface (VPN IPsec) or the GSM/GPRS modem MD720-3 (MSC-VPN) to the RS232 interface.

- The TIM4R-IE has four interfaces for simple and redundant transmission paths:
  - Two combined RS232/RS485 interfaces for connection to standard WANs such as dedicated line, wireless or dial-up network
  - Two RJ45 interfaces for connection to IP-based networks (WAN or LAN) such as fiber-optics, DSL, GPRS, etc.
- Compact, double-width module that can be used in a wide variety of situations:
  - The TIM handles the SINAUT communication for one or more S7-400 controllers or control desk PCs (SINAUT ST7cc or ST7sc) as a stand-alone device (stand-alone without S7-300 CPU); the connection in this case is via Ethernet interfaces of the TIM
  - As a communications processor (CP) in an S7-300
- The two RJ45 interfaces can be configured either as an MSC-VPN server in the central office or as MSC-VPN client in a station. At the RS232 interface, an MD720-3 can be operated in GPRS mode as MSC-VPN client.
- The four transmission paths can all be different and operated independently of one another, but also in any redundant combination.
- Flexible creation of redundant transmission paths via two conventional WANs, via two IP-based networks or a combination of WAN + IP-based network.
- When installed as a CP in an S7-300, the following communication is also possible via the backplane bus:
  - With the CPU
  - Via the MPI of this CPU with other CPUs and control desk PCs (ST7cc, ST7sc) connected over the MPI bus.
  - With other TIMs in this rack
- Message frame memory for up to 56 000 data message frames
- Optional backup battery for backup of the stored data message frames and the hardware clock if the power fails
- Up to 62 S7 connections or 128 MSC-VPN tunnel connections (as control center) via IP-based networks and MPI (for S7-300-CPU)
- The SINAUT TD7 software for the CPU (TD7onCPU) is integrated in the TIM (TD7onTIM); implemented with installation as CP in a S7-300
- Module replacement possible without PG
  - In stand-alone mode using the optional C-PLUG
  - When installed as a CP in an S7-300 over the memory card of the CPU
- PG communication is possible parallel to data communication at any time
- Several TIM 4R-IE can be used per S7-300, also together with one or more TIM 3V-IE Advanced
- Up to 128 S7 connections via IP-based networks (in MSC tunnel mode)

© Siemens AG 2014

Function (continued)

Controllable communication modules:

- Control of the GSM/GPRS modems MD720-3 in the GSM or GPRS mode. In GPRS mode, simple 128-bit encryption via the MD720-3 (MSC-VPN tunnel protocol).
- Operation via SIMATIC NET Ethernet components with high IPsec security standard (e.g. GPRS router or SCALANCE S)
- Direct operation on a DSL router by means of MSC tunnel protocol
- Use of SCALANCE fiber-optic switches for spanning long distances
- Wireless transmission via IWLAN with SCALANCE W over medium distances
- Dedicated line modem MD2 for point-to-point, point-to-multi-point or line connections
- Wireless devices from various manufacturers, also for private mobile radio using the time slot method
- Analog dial-up modem MD3 for the analog telephone network or point-to-point dedicated lines

Special properties as "control center" TIM

For data transmission via conventional WANs, the TIM 4R-IE has other, special properties that predetermine its use as a "control center" TIM:

- In a dialup network the message "Failure of local node" can be switched off. If the control desk PC fails or is temporarily shut down, the control center TIM 4R-IE will not send any failure message to the stations in the dialup network and therefore saves transmission costs.
- One especially useful feature during commissioning is the possibility that SINAUT stations can be switched on and off on the control center TIM 4R-IE. This applies not only for stations that are connected via dedicated line/radio, but also for stations in the dial-up network. The last status set for each station is permanently stored on the TIM and is therefore not lost if the power fails or the TIM is restarted.
- For GPRS, dedicated lines and mobile networks, the message "Node faulty" can be suppressed on the TIM 4R-IE for a programmable period of time. A station failure is then no longer indicated after x unanswered calls (polls), but only when a recognized fault still exists after expiry of the programmed time. This enables the number of failure messages to be reduced in poor-quality networks and it also minimizes the additional message frame traffic that must be processed after each station is restored.

Optional C-PLUG

The most frequent application for the TIM 4R-IE will be its use as a communication module for the control desk PC or for an S7-400. The TIM then operates in standalone mode, i.e. without S7-300 CPU. The option of saving the TIM configuration data on the MMC card of the CPU, in order to exchange the TIM without a PG in the event of a fault, no longer applies. The saving of configuration data on the C-PLUG, which can be optionally equipped, solves this problem. This means that, even in stand-alone mode, a replacement of the TIM is possible without PG.

Integration

Connection to IP-based networks

In addition to the two combined RS 232/RS 485 interfaces, the TIM 4R-IE also has two RJ45 sockets. These are suitable for the connection of IP-based networks (WAN or LAN). Depending on the application, various types of data communication equipment can be connected such as:

- SCALANCE X switches for Twisted Pair cable or fiber-optic cables
- SCALANCE W (IWLAN) and Ethernet radio devices from various manufacturers
- SCALANCE M for communication via mobile wireless networks
- EGPRS router SCALANCE M874-2 for GPRS communication and EGPRS (Edge) over mobile wireless networks
- SCALANCE S for VPN (IPsec)
- GPRS/GSM modem MD720-3 for GPRS communication via GSM mobile telephone networks using MSC-VPN tunnel protocol
- Directly on a DSL router by means of the MSC-VPN tunnel protocol integrated in the TIM
- Broadband systems such as OTN, PCM30

Connection to a conventional WAN

For the connection to a conventional WAN the TIM 4R-IE provides two floating RS 232/RS 485 interfaces, to which various data communication devices can be connected, depending on the application, such as:

- Dedicated line modem MD2 for point-to-point, point-to-multi-point or line connections
- Wireless devices from various manufacturers, also for private mobile radio using the time slot method
- Analog dial-up modem MD3 for the analog telephone network or point-to-point dedicated lines
- GPRS/GSM modem MD720-3 for access to the mobile telephone network

© Siemens AG 2014

Integration (continued)

Configuration examples using TIM 4R-IE

Use in a node station

In a node station with a SIMATIC S7-400 the TIM 4R-IE is connected to the S7-400 via one of its two Ethernet interfaces and can, for example, exchange data by radio with the subordinate stations via an RS232/RS485 interface. It is then connected to the control center via the second Ethernet interface, e.g. via a fiber-optic cable that is connected through SCALANCE X switches and media converters.
In this configuration, data can be exchanged between all of the SINAUT stations regardless of which network they are situated in.

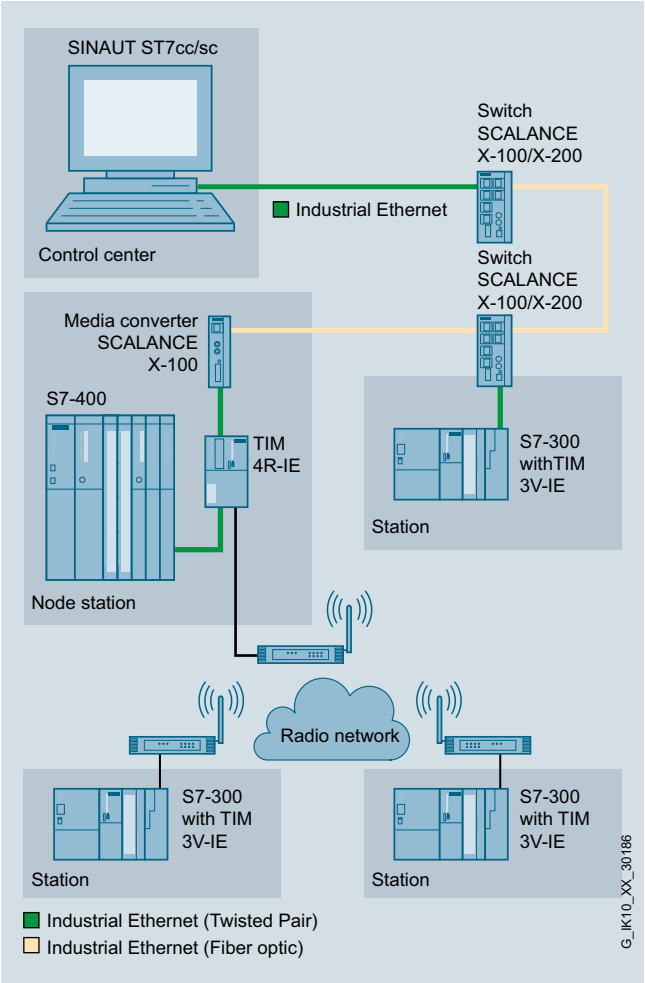

Use in a node station

Redundant transmission paths

Using TIM 4R-IE, a station can be connected to the control center over redundant paths. The TIM 4R-IE is used for this purpose both in the station and in the control center. The example shows as redundant paths a combination of leased line and radio, i.e. two conventional WANs, for which the TIM 4R-IE offers corresponding connections (2 x RS232/RS485). The two TIMs coordinate the data transmission. It takes place normally over the main path and only if it fails over the standby path. When the main path is restored, changeover back to this path is performed automatically.

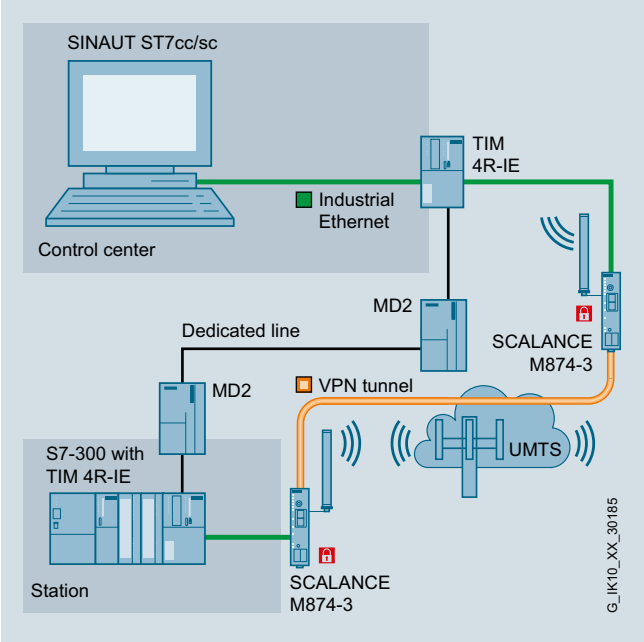

Redundant transmission paths

© Siemens AG 2014

Integration (continued)

Use in a control center

The TIM 4R-IE is also suitable for use in a control center, either alone or in combination with other TIMs. The following example shows a TIM 4R-IE that is connected via one of its two Ethernet interfaces with the control center PC (e.g. ST7cc). An S7-400 is also connected to the Industrial Ethernet and this must also exchange data with the SINAUT stations. SINAUT stations are connected by means of GPRS using MSC-VPN via the second Ethernet port of the TIM, while a wireless network and point-to-point leased line network are connected via the two RS232/RS485 ports. For the point-to-point connection, the port of the TIM is set to RS485. It is then possible to operate up to 30 SINAUT leased line modems on this port; the example shows MD2 modems.

If the stations in this network have to be provided with the date and time, the control center PC assumes the function of the clock-time master. Via the Ethernet connection, the TIM 4R-IE is regularly synchronized by the PC and it then takes over the synchronization of the connected stations.

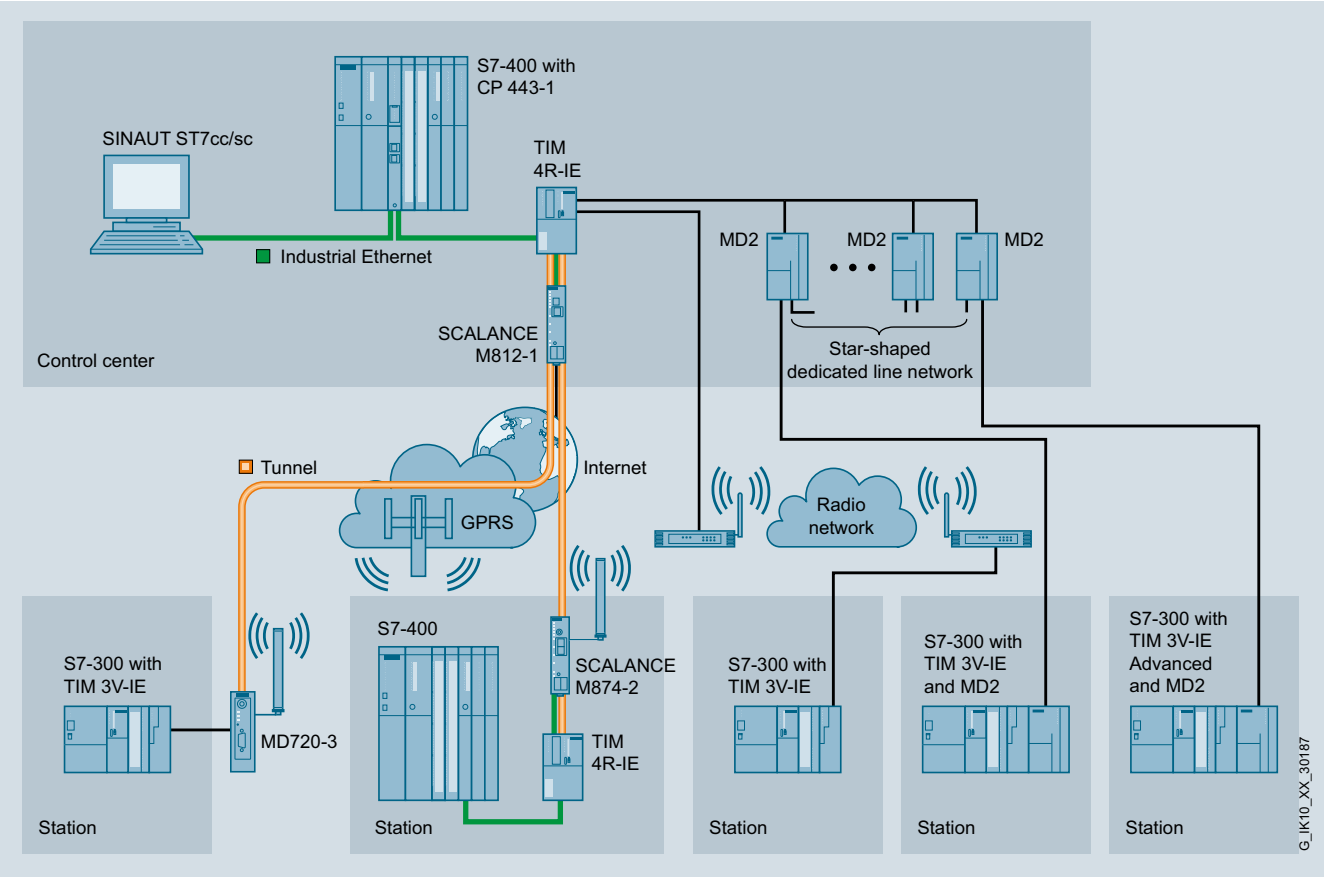

Use of TIM 4R-IE in a control center

© Siemens AG 2014

Technical specifications

Article No.	6NH7800-4BA00
Product-type designation	**TIM 4R-IE**
Transmission rate	
Transfer rate	
• for Industrial Ethernet	10 … 100 Mbit/s
• in accordance with RS 232	50 … 38 400 bit/s
Interfaces	
Number of interfaces according to Industrial Ethernet	2
Number of electrical connections	
• for external data transmission in accordance with RS 232	2
• for power supply	1
Design of electrical connection	
• the Industrial Ethernet Interface	RJ45 port
• at interface 1 for external data transmission	9-pin D-sub connector, RS232 switchable to RS485
• at interface 2 for external data transmission	9-pin D-sub connector, RS232 switchable to RS485
• for power supply	2-pin, pluggable terminal strip
design of the removable storage C-PLUG	Yes
Supply voltage, current consumption, power loss	
Type of supply voltage	DC
Supply voltage	24 V
• minimum	20.4 V
• maximum	28.8 V
Consumed current	
• from backplane bus at 24 V for DC maximum	0.2 A
• from external supply voltage at 24 V with DC maximum	0.17 A
Resistive loss	4.6 W
Product expansion optional backup battery	Yes
Type of battery	Lithium AA / 3.6 V / 2.3 Ah
Backup current	
• typical	100 µA
• maximum	160 µA
Permitted ambient conditions	
Ambient temperature	
• during operating	0 … 60 °C
• during storage	-40 … +70 °C
• during transport	-40 … +70 °C
Relative humidity at 25 °C without condensation during operating maximum	95 %
Protection class IP	IP20
Design, dimensions and weight	
Module format	Compact module S7-300 double width
Width	80 mm
Height	125 mm
Depth	120 mm
Net weight	0.4 kg

Article No.	6NH7800-4BA00
Product-type designation	**TIM 4R-IE**
Product properties, functions, components general	
Number of modules note	Number of TIM 4R-IE per S7-300/S7-400: multiple, number depends on the connection resources of the CPU
Cable length	
• with RS 232 interface maximum	6 m
• with RS 485 interface maximum	30 m
Performance data	
Performance data S7 communication	
Number of possible connections for S7 communication	
• maximum	64
• with PG connections maximum	2
• with OP connections maximum	62
• note	-
Service	
• SINAUT ST7 through S7 communication	Yes
• PG-/OP-communication	Yes
Performance data multi-protocol mode	
Number of active connections with multiprotocol mode	128
Performance data telecontrol	
Suitability for use	
• node station	Yes
• substation	Yes
• control center	Yes
• note	-
Protocol is supported	Yes
• TCP/IP	
• DNP3	No
• SINAUT ST1 protocol	Yes
• SINAUT ST7 protocol	Yes
Product function data buffering if connection is aborted	Yes
• note	56 000 data messages
Storage capacity	
• of user memory of S7 CPU	
- for TD7onCPU mode data blocks on CPU required	20 Kibyte
- for TD7onTIM mode data blocks on TIM required	0 Kibyte
• note	TD7onCPU: at least 20 KB, actual requirement determined by data volume and functional scope TD7onTIM: 0 bytes in most favorable case
Product property retentive message frame memory	Yes
Transmission format	
• for SINAUT ST1 protocol with polling 11 bit	Yes
• for SINAUT ST1 protocol with spontaneous 10 bit or 11 bit	Yes
• for SINAUT ST7 protocol with multi-master polling 10 bit	Yes
• for SINAUT ST7 protocol with polling or spontaneous 10 bit or 11 bit	Yes

© Siemens AG 2014

Technical specifications (continued)

Article No.	6NH7800-4BA00
Product-type designation	**TIM 4R-IE**
Operating mode for scanning of data transmission	
• with dedicated line/radio link	
- with SINAUT ST1 protocol	Polling, polling with time slot procedure
- with SINAUT ST7 protocol	Polling, polling with time slot procedure, multi-master polling with time slot procedure
• with dial-up network	
- with SINAUT ST1 protocol	spontaneous
- with SINAUT ST7 protocol	spontaneous
Hamming distance	
• for SINAUT ST1 protocol	4
• for SINAUT ST7 protocol	4
Product functions management, configuration	
Configuration software	
• required	
• for CPU configuring required SINAUT TD7 block library for CPU	Yes
• for PG configuring required SINAUT ST7 configuration software for PG	Yes
Storage location of TIM configuration data	On internal TIM flash memory, or on TIM in optional C-PLUG, or on MMC of the S7-300 CPU if TIM installed in S7-300 controller

Article No.	6NH7800-4BA00
Product-type designation	**TIM 4R-IE**
Product functions security Virtual Private Network	
Suitability for installation Virtual Private Network	Yes
Product function	
• password protection for VPN	Yes
• MSC client via GPRS modem with MSC capability	Yes
Protocol is supported MSC protocol	Yes
Number of possible connections	
• as MSC client with VPN connection	1
• as MSC server with VPN connection	128
Protocol with Virtual Private Network MSC is supported	TCP/IP
Key length for MSC with Virtual Private Network	128 bit
Type of authentication with Virtual Private Network PSK	Yes
Operating mode Virtual Private Network note	-
Product functions Time	
Product component Hardware real-time clock	Yes
Product property battery-backed hardware real-time clock	Yes
Accuracy of hardware real-time clock per day maximum	4 s

© Siemens AG 2014

Ordering data

TIM 4R-IE communications module With two combined RS 232/RS 485 interfaces for SINAUT communication via conventional WANs and two RJ45 interfaces for SINAUT communication via IP-based networks (WAN or LAN)	**6NH7800-4BA00**
SINAUT Engineering Software V5.4 On CD-ROM, comprising • SINAUT ST7 Engineering Software V5.4 for the PG • SINAUT TD7 block library • Electronic manual in German and English	**6NH7997-0CA54-0AA0**
Accessories	
Backup battery 3.6 V/2.3 Ah for TIM 4R-IE	**6ES7971-0BA00**
IE FC TP Standard Cable GP 2 x 2 (Type A) 4-core, shielded TP installation cable for connection to IE FC Outlet RJ45/ IE FC RJ45 Plug; PROFINET-compatible; with UL approval; sold by the meter; max. length 1 000 m, minimum order quantity 20 m	**6XV1840-2AH10**
IE FC RJ45 Plug 180 RJ45 plug-in connector for Industrial Ethernet with a rugged metal housing and integrated insulation displacement contacts for connecting Industrial Ethernet FC installation cables; with 180° cable outlet; for network components and CPs/CPUs with Industrial Ethernet interface	
• 1 pack = 1 unit	**6GK1901-1BB10-2AA0**
• 1 pack = 10 units	**6GK1901-1BB10-2AB0**
• 1 pack = 50 units	**6GK1901-1BB10-2AE0**

IE FC Stripping Tool Preadjusted stripping tool for fast stripping of the Industrial Ethernet FC cables	**6GK1901-1GA00**
Connecting cable For connecting a TIM (RS 232) with a SINAUT ST7 MD2, MD3 or MD4 (RS 232) modem; cable length 1.5 m	**6NH7701-4AL**
Connecting cable For connecting a TIM (RS 485) with a SINAUT ST7 MD2, MD3 or MD4 (RS 485) modem; cable length 1.5 m	**6NH7701-4DL**
Connecting cable For connecting a TIM (RS 232) with the GSM modem MD720-3; also suitable for third-party modems or radio equipment with standard RS 232 interface; cable length 2.5 m	**6NH7701-5AN**
Connecting cable with one end open for connecting a TIM (RS 232) to a third-party modem or radio unit (RS 232); cable length 2.5 m	**6NH7701-4BN**
Connecting cable For connecting two TIM modules via their RS 232 interface without modems ("null modem"); cable length 6 m	**6NH7701-0AR**
SITOP compact 24 V/0.6 A 1-phase power supply with wide-range input 85 … 264 V AC/110 … 300 V DC, stabilized output voltage 24 V, rated output current value 0.6 A, slim design	**6EP1331-5BA00**

© Siemens AG 2014

Overview

DNP3 (**D**istributed **N**etwork **P**rotocol) is a standardized, manufacturer-independent telecontrol protocol.

To implement a telecontrol system with DNP3 protocol, substations (RTU) can be set up based on SIMATIC.
The CP 1243-1 DNP3 for SIMATIC S7-1200 and the Telecontrol Interface Modules (TIM) for SIMATIC S7-300/400 are offered for this.

Telecontrol communications processors

CP 1243-1 DNP3

The CP 1243-1 DNP3 (DNP3 protocol) is an Industrial Remote Communication module for the telecontrol substation with SIMATIC S7-1200. It has an RJ45 interface, which allows communication over IP-based networks.

The TIM telecontrol communications module

TIM 3V-IE DNP3

The TIM 3V-IE DNP3 (DNP3 protocol) is a SINAUT communications module for the telecontrol substation with SIMATIC S7-300 and, as a station module, can be directly connected via the Ethernet to a PC as a DNP3 control center. It has an RS 232 interface to which a suitable external leased-line, radio or analog dialup modem can be connected. It additionally possesses an RJ45 interface, which permits communication over IP-based networks. On the TIM 3V-IE DNP3, both interfaces can be operated simultaneously, e.g. to implement path redundancy to a DNP3 control center.

TIM 4R-IE DNP3

The TIM 4R-IE DNP3 (DNP3 protocol) has two RS 232/RS 485 interfaces for data transmission via conventional WANs (copper dedicated line, analog dialup modems, wireless) and two additional RJ45 interfaces for connection to IP-based networks (WAN or LAN).

This TIM can be used as a communication processor in a SIMATIC S7-300, but it is especially suitable as a telecontrol module for a SIMATIC S7-400 or SIMATIC S7-400H. In this case it is connected to the S7-CPU as stand-alone device via one of its two Ethernet interfaces. The module can be configured as a station, node or master module. As a station module, it can be directly connected to a PC over Ethernet as a DNP3 control center.

The four transmission paths can all be different and operated independently of one another, but also in any redundant combination.

© Siemens AG 2014

Design

Configuration examples

S7-1200 substations can be connected to a DNP3-capable control center using CP 1243-1 DNP3 over the Industrial Ethernet interface and an external router, e.g. SCALANCE M via a WAN network.

S7-300 or S7-400 substations can be connected to a WAN via the isolated serial interfaces of the TIM DNP3 modules, and specifically via different data communication devices depending on the application:

- Dedicated line modems for point-to-point, point-to-multipoint or line connections
- Fiber-optic cable modules (via RS485 converters)
- Wireless devices from various manufacturers

S7-1200, S7-300 or S7-400 substations can be connected to Ethernet , i.e. to IP-based networks (LAN, IWLAN, DSL, GPRS, etc.) via the RJ45 interfaces of the DNP3 modules.

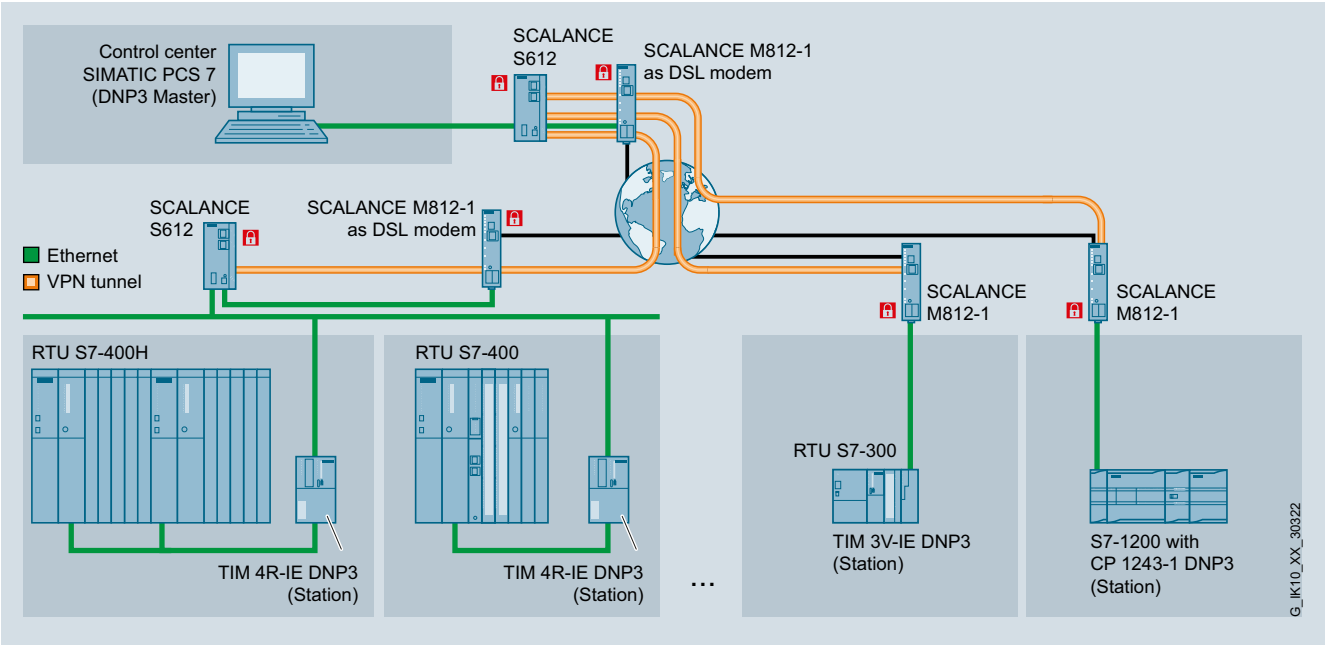

CP 1243-1 DNP3 with PCS 7 control center

© Siemens AG 2014

Overview

The CP 1243-1 DNP3 communications processor is used to connect a SIMATIC S7-1200 to a control center system via the DNP3 protocol and has the following characteristics:

- Support for the established DNP3 telecontrol protocol for standardized linking of the SIMATIC S7-1200 to WinCC, PCS 7, or other commercially available control center systems
- Data transfer of measured values, control variables, or alarms optimized for telecontrol systems
- Automatic sending of alert emails
- Clearly laid out LED signaling for fast and easy diagnostics
- Compact industrial enclosure in S7-1200 design for mounting on a standard mounting rail
- Fast commissioning thanks to easy configuration using STEP 7
- Data buffering of up to 64 000 values ensures a secure database even with temporary connection failures

Benefits

get Designed for Industry

- **Data security**
  The CP 1243-1 DNP3 has a large buffer for several thousand data values. Downtimes in the transmission link can then be bridged.
- **Fully automatic time stamp**
  To enable subsequent and correct archiving of process data in the control system, all data frames are assigned with a time stamp at their place of origin.
- **Fast and flexible data communication**
  Operators are therefore quickly provided with alarms, statuses and values from the process, and they can influence process control by entering commands or setpoints at any time.
- **Simple and low-cost engineering**
  The cyclic or event-controller transfer of measurements, setpoints or alarms can be implemented in only a few operations and without programming effort.
- **Remote diagnostics**
  Saving of traveling and maintenance costs due to cost-effective remote programming, diagnostics, control and monitoring via the Internet

Application

- Plants in water, wastewater or environmental sectors:
  - Irrigation systems
  - Drinking water supply
- Monitoring of power networks for consumption metering and cost control
  - District heating networks
  - Wind farms
- Plants in the oil and gas sector
  - Oilfield water injection
  - Pipelines

By using the CP 1243-1 DNP3, the S7-1200 can be used as a remote terminal unit (substation) in telecontrol applications. Typical uses include the collection of measured values in geographically widely distributed outdoor areas (level measurement for water tanks) or centralized opening and closing of valves (oil/gas transport in pipelines).

Design

The CP 1243-1 DNP3 offers all the advantages of the S7-1200 design:

- Rugged, compact plastic enclosure
- Easily accessible connection and diagnostics elements, protected by front flaps
- Simple mounting on the mounting rail of the S7-1200

The CP 1243-1 DNP3 is plugged into the left-hand system bus interface of the S7-1200. Power is supplied directly via the S7-1200. No additional wiring is necessary. Any required modems or routers are connected via the Ethernet interface on the underside of the module.

© Siemens AG 2014

Function

The CP 1243-1 DNP3 is a communication module for the S7-1200. The module allows the S7-1200 to be connected as a remote station to a DNP3-based control center in just a few steps.

Completely configurable application through "data point configuration"

The introduction of the "data point configuration" in STEP 7 dispenses with all programming effort for transfer of data to the control center.

The data of the CPU relevant to the control center is selected via user-friendly "item browsing" in STEP 7. In a clearly-arranged menu, the data transfer parameters are then assigned to the data points selected in this way. The cyclic or event-controller transfer of measurements, setpoints or alarms can thus be implemented in only a few operations and without programming effort.

Data backup

Data losses are prevented by the data buffering mechanisms integrated in the product.

In the event of a connection failure, up to 64 000 time-stamped values are buffered. When the connection returns, the buffered values are automatically transferred to the control center in the right order.

E-mail alerting

Alert e-mails can be configured for timely provision of stations' states to service or maintenance personnel. If previously defined events (such as threshold violation) should occur, application-specific information is sent automatically by e-mail.

Diagnostics

The CP 1243-1 DNP3 offers comprehensive diagnostic options for a quick and informative analysis of the station status. Elementary diagnostic information about the connection to the control center is signaled directly via LEDs at the CP.

Using STEP 7, comprehensive information can be retrieved, such as connection history, buffer status, and the transferred measured values.

DNP3 protocol

Communication with the control center is based on the established standard of DNP3 specification 2 (2007/2009).

Thanks to support of the object and data transfer mechanisms defined in the specification, compatibility with PCS 7, WinCC (with applicable telecontrol packages), and all other control center systems available on the market is warranted.

The security mechanisms already defined in the DNP3 standard for secure data transfer through trunk networks are fully supported.

Remote maintenance

For remote access from the control center to the substation, the CP provides a remote maintenance port in parallel with process operation. This ensures access for monitoring and program changes.

Interfaces

The CP 1243-1 DNP3 has an Ethernet interface to connect to the control center. The S7-1200 can be connected via an existing network or via other media by using additional routers (e.g. SCALANCE M for mobile wireless communication).

Power supply

Extra wiring for the CP power supply is not required. Power is supplied directly via the backplane bus of the S7-1200.

© Siemens AG 2014

Integration

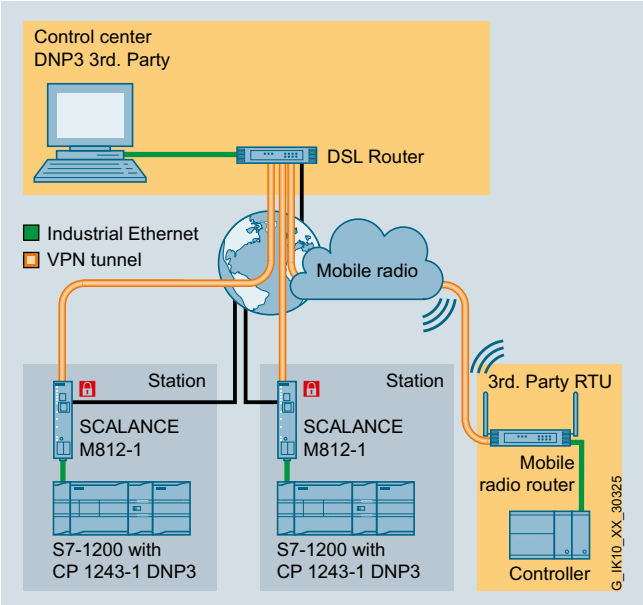

CP 1243-1 DNP3 with 3rd-party control center

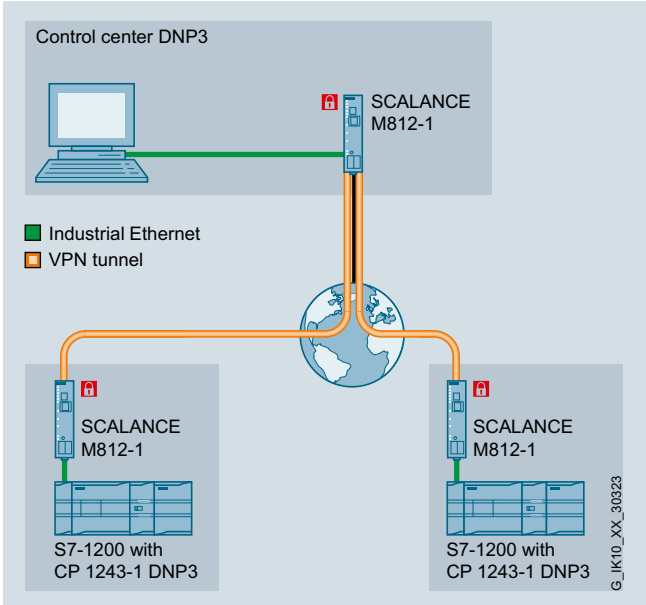

CP 1243-1 DNP3: Integration in existing telecontrol systems

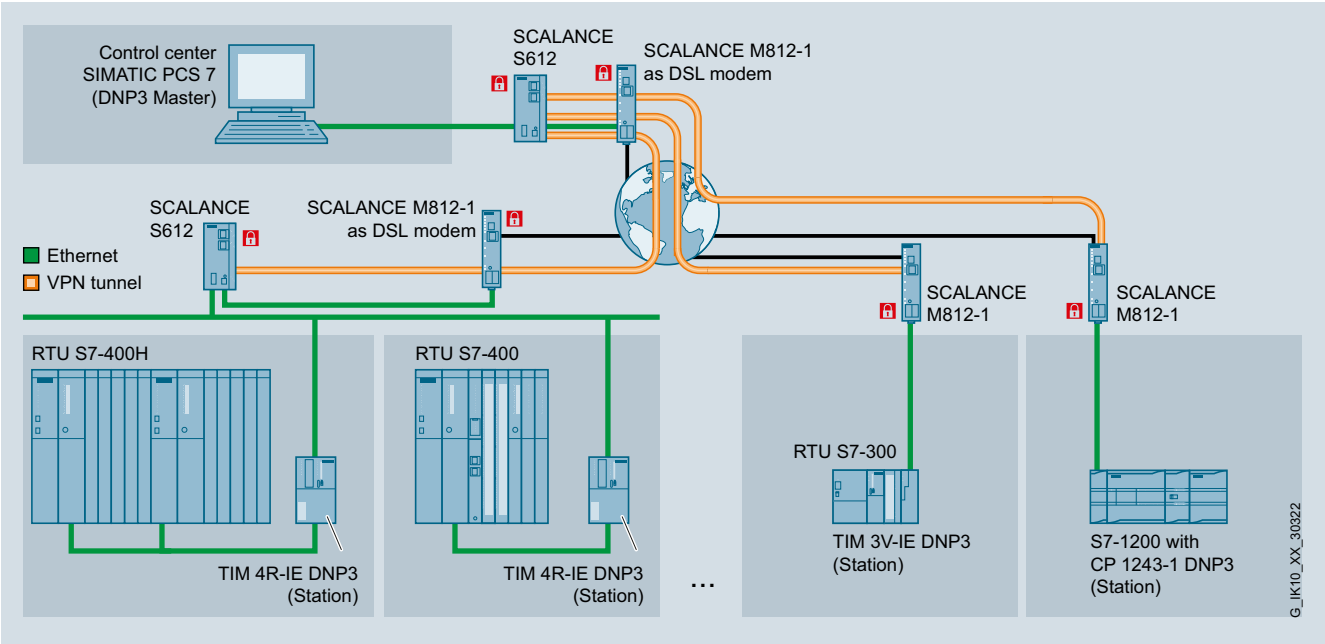

CP 1243-1 DNP3 with PCS 7 control center

© Siemens AG 2014

Technical specifications

Article No.	6GK7243-1JX30-0XE0
Product-type designation	**CP 1243-1 DNP3**
Transmission rate	
Transfer rate at the interface 1	10 … 100 Mbit/s
Interfaces	
Number of electrical connections at interface 1 in accordance with Industrial Ethernet	1
Design of electrical connection at interface 1 in accordance with Industrial Ethernet	RJ45 port
Supply voltage, current consumption, power loss	
Type of supply voltage	DC
Supply voltage 1 from backplane bus	5 V
Consumed current from backplane bus at 5 V for DC Typical	0.25 A
Resistive loss	1.25 W
Permitted ambient conditions	
Ambient temperature	
• for vertical installation during operating phase	-20 … +60 °C
• for horizontal installation during operating phase	-20 … +70 °C
• during storage	-40 … +70 °C
• during transport	-40 … +70 °C
Relative humidity at 25 °C without condensation during operating maximum	95 %
Protection class IP	IP20
Design, dimensions and weight	
Module format	Compact module S7-1200 single width
Width	30 mm
Height	110 mm
Depth	75 mm
Net weight	0.122 kg
Mounting type	
• 35 mm DIN rail mounting	Yes
• wall mounting	Yes
Product properties, functions, components general	
Number of modules	
• per CPU maximum	3

Article No.	6GK7243-1JX30-0XE0
Product-type designation	**CP 1243-1 DNP3**
Performance data	
Performance data S7 communication	
Number of possible connections for S7 communication note	like CPU
Performance data telecontrol	
Suitability for use	
• node station	No
• substation	Yes
• control center	No
• note	-
Connection to the control center	control center with DNP3 function
• note	Connection to Scada system using DNP3 services
• by means of a permanent connection	supported
• by means of demand-oriented connection	-
Protocol is supported	
• DNP3	Yes
• IEC 60870-5	No
Product function data buffering if connection is aborted	Yes
• note	64 000 values
Number of data points per station maximum	200
Performance data Teleservice	
Diagnostic function online diagnostics with SIMATIC STEP 7	Yes
Product function	
• program download with SIMATIC STEP 7	Yes
• remote firmware update	Yes
Product functions management, configuration	
Configuration software required	
Product functions Time	
Protocol is supported NTP	No

Ordering data

	Article No.
CP 1243-1 DNP3 communications processor	
Communications processor for connecting SIMATIC S7-1200 to a control center via the DNP3 protocol	**6GK7243-1JX30-0XE0**

More information

Technical requirements/compatibility

An S7-1200 CPU with firmware version 3 is required for operating the CP 1243-1 DNP3.

The CP 1243-1 DNP3 is configured using STEP 7 V12 SP1 and higher.

To connect to PCS 7/WinCC control center systems, the relevant telecontrol packages to support the DNP3 protocol are required.

© Siemens AG 2014

TIM 3V-IE DNP3

Overview

In a station for the S7-CPU, the new communication module TIM 3V-IE DNP3 V3.0 (**T**ele**C**ontrol Interface **M**odule) handles the data exchange with the assigned master system SIMATIC PCS 7 TeleControl V8.0 using the open DNP3 protocol. In addition, the V3.0 module now also supports master and node functionality.

- With the S7-300 housing, the module can be fully integrated into the S7-300 system
- The module has an RS 232 interface for the connection of an external modem for data transmission via a conventional WAN or the connection of a Modbus RTU slave to an S7-300 system
- The RJ45 port is used for data transmission via IP-based networks

Benefits

get Designed for Industry

- Flexible option for connection to any conventional or IP-based WAN
- Connection to DNP3 master systems from third-party vendors is possible by using the open protocol DNP3
- Saving of traveling and maintenance costs due to cost-effective remote programming, diagnostics, control and monitoring via the Internet
- Reduction in time and costs thanks to quick and user-friendly configuration of connections and data to be transferred with the SINAUT configuration software and block library
- Reliable back-up of important data:
  Storage of the DNP3 data points (max. 64 000 in the case of a master), including time stamp on the TIM if the communication path is faulty or a partner has failed

Application

- Low-cost automation of water/wastewater networks with both complex and simple structures
- Control and monitoring of energy distribution systems and supply stations, such as oil, gas or district heating networks
- Preventive maintenance (condition monitoring) of globally distributed systems
- Connection of plants with basic or high-level security and availability requirements
- Use in hybrid networks with dial-up, wireless, Ethernet or Internet communications

Design

The TIM 3V-IE DNP3 offers all the advantages of the SIMATIC S7-300 design:

- Compact design with S7-300 format
- 9-pin sub-D connectors with an RS232 interface for connection to a conventional WAN via an appropriate modem
- RJ45 socket for connection to Industrial Ethernet or an IP-based network;
  industrial design with additional retaining collar, for connecting the IE FC RJ45 Plug 180
- 2-pin plug-in terminal strip for connection of the 24 V DC external supply voltage
- Front-panel LEDs for indicating the module status and the communication
- Easy installation;
  the TIM 3V-IE DNP3 is mounted on the DIN rail of the S7-300 and connected to adjacent modules by means of the bus connector supplied with the TIM. No slot rules apply.
- Can be operated in the expansion rack (ER) in conjunction with the IM 360/361 interface modules
- Can be operated without a fan
- No backup battery or memory module is required

Function

- Data is transmitted using the open DNP3 protocol
- Media redundancy by using physically separated connection paths without data loss at switchover
- Extensive diagnostics functions including the option of logging the sent and received message frames
- Time-of-day synchronization with the assigned DNP3 master system is possible
- Remote programming in the case of IP-based networks
- Modbus RTU Master

© Siemens AG 2014

Function (continued)

Also available with the new Version 3.0

- DNP3 Master
- DNP3 nodes; the module operates simultaneously as master and slave and, as a data concentrator, links the RTUs with the control center
- Peer-to-peer communication in the Ethernet-based network between the TIM modules used as DNP3 slave
- Setting of DNP3 event classes (Class 1, Class 2 and Class 3)
- Routing between TIM modules
- Support of analog dialup modems (PSTN dialup)

The TIM 3V-IE DNP3 communications module has its own processor and a RAM for buffering up to 64 000 data points. This prevents any loss of data in the event of a fault on the communication link or the failure of a communication partner.

Diagnostics

The SINAUT diagnostics and service tool of the SINAUT ST7 Engineering Software V5.4 provides comprehensive diagnostic functions, including:

- Operating status of the TIM module
- Module status of the TIM module
- General diagnostic information
- Diagnostic buffer of the TIM module
- Status of the connections to remote communication partners
- Status and level of the transmit buffer
- TIM frame monitor for recording the frame traffic

Configuration

The SINAUT ST7 engineering software V5.4 is used for configuring the TIM 3V-IE DNP3 module. Parameters are assigned with the aid of the SINAUT configuration software in STEP 7 HW Config and STEP 7 Netpro.

Integration

By means of a floating RS232 interface, the TIM 3V-IE DNP3 module is connected to a WAN, and specifically via various data communication devices depending on the application:

- Dedicated line modems for point-to-point, point-to-multipoint or line connections
- Analog dialup modems (V3.0 or higher)
- Fiber-optic cable modules (via RS485 converters)
- Wireless devices from various manufacturers

In addition, it is possible to connect a Modbus RTU slave to the S7-300 system via the TIM 3V-IE DNP3.

Via the RJ45 interface, the TM 3V-IE DNP3 module can be connected to the Ethernet, i.e. to IP-based networks (LAN, IWLAN, DSL, GPRS, UMTS, etc.).

Configuration examples in conventional and IP-based WAN

Use in a station with transmission via a dedicated line network

The connection to the master station is via the MD2 modem, which sets up the connection via a dedicated line.

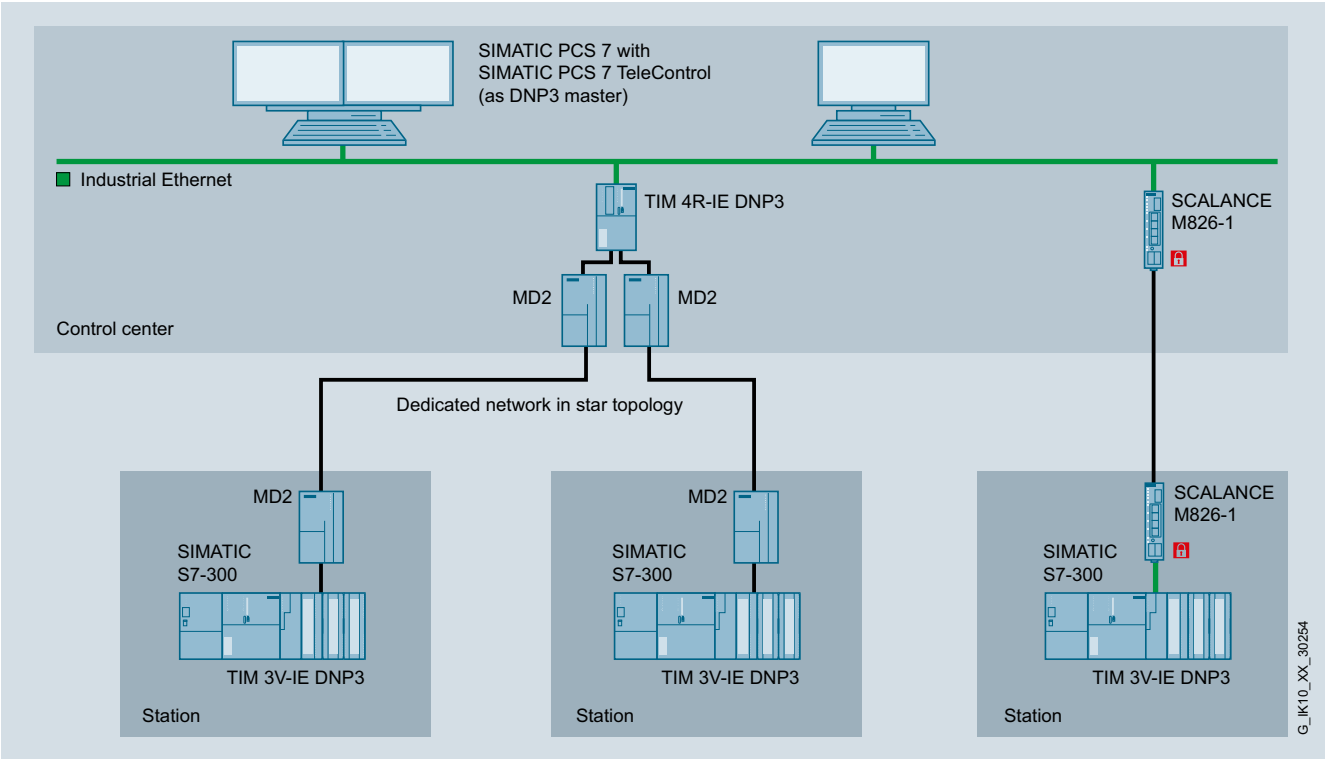

© Siemens AG 2014

Integration (continued)

Use in a station with transmission via Internet

The stations are connected by means of an Internet connection. In this case, DSL routers must be used in the station and control center – preferably in combination with SCALANCE S in order to establish secure connections using VPN tunnels.

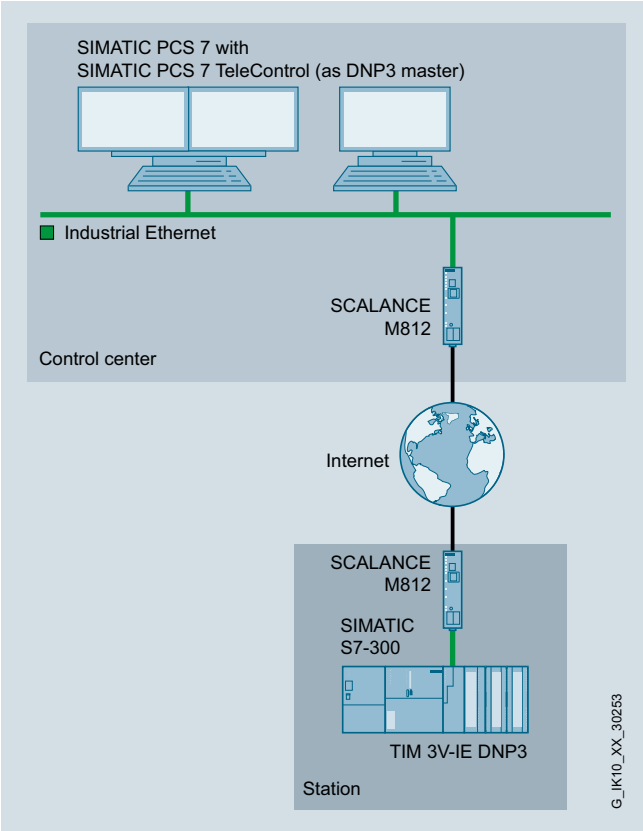

Use in a station with transmission over the GSM mobile telephone service GPRS or UMTS

The stations are connected via the GSM mobile telephone service GPRS. In this case the GPRS router SCALANCE M874-2 is used in the station and a SCALANCE S security module is used in the control center. This ensures that the VPN connections to the GPRS stations are set up.

For higher data rates, in place of the GRPS router SCALANCE M874-2, the UMTS router SCALANCE M874-3 can be implemented for use of the UMTS mobile wireless network.

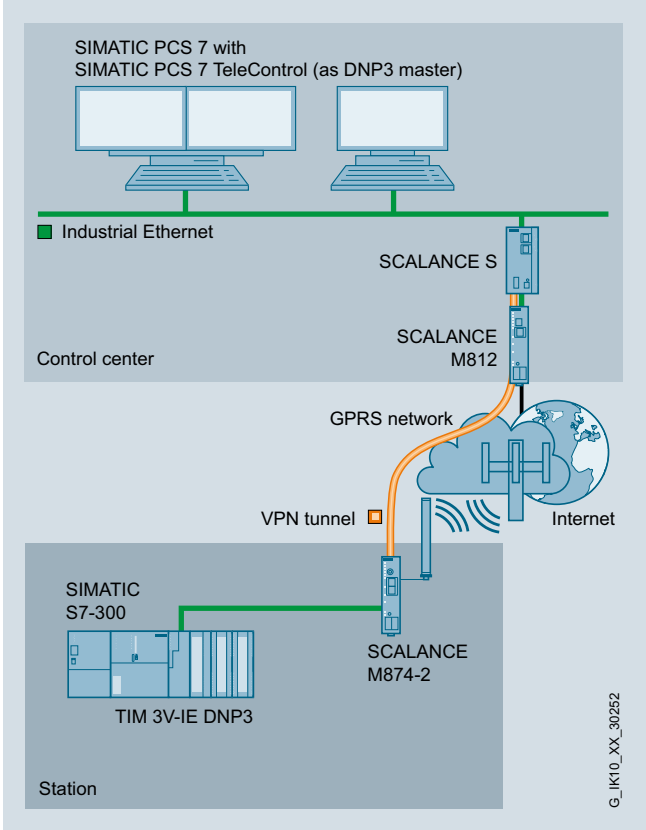

© Siemens AG 2014

Technical specifications

Article No.	6NH7803-3BA00-0AA0
Product-type designation	**TIM 3V-IE DNP3**
Transmission rate	
Transfer rate	
• for Industrial Ethernet	10 … 100 Mbit/s
• in accordance with RS 232	9 600 … 38 400 bit/s
Interfaces	
Number of interfaces according to Industrial Ethernet	1
Number of electrical connections	
• for external data transmission in accordance with RS 232	1
• for power supply	1
Design of electrical connection	
• the Industrial Ethernet Interface	RJ45 port
• at interface 1 for external data transmission	9-pin Sub-D connector (RS232)
• at interface 2 for external data transmission	-
• for power supply	2-pin, plug-in terminal strip
design of the removable storage C-PLUG	No
Supply voltage, current consumption, power loss	
Type of supply voltage	DC
Supply voltage	24 V
• minimum	20.4 V
• maximum	28.8 V
Consumed current	
• from backplane bus at 24 V for DC maximum	0.2 A
• from external supply voltage at 24 V with DC maximum	0.2 A
Resistive loss	5.8 W
Product expansion optional backup battery	No
Type of battery	-
Backup current	
• typical	-
• maximum	-
Permitted ambient conditions	
Ambient temperature	
• during operating	0 … 60 °C
• during storage	-40 … +70 °C
• during transport	-40 … +70 °C
Relative humidity at 25 °C without condensation during operating maximum	95 %
Protection class IP	IP20
Design, dimensions and weight	
Module format	Compact module S7-300 single width
Width	40 mm
Height	125 mm
Depth	120 mm
Net weight	0.25 kg

Article No.	6NH7803-3BA00-0AA0
Product-type designation	**TIM 3V-IE DNP3**
Product properties, functions, components general	
Number of modules note	Number of TIMs per S7-300: 1
Cable length	
• with RS 232 interface maximum	6 m
• with RS 485 interface maximum	-
Performance data	
Performance data S7 communication	
Number of possible connections for S7 communication	
• maximum	3
• with PG connections maximum	2
• with OP connections maximum	1
• note	only via LAN
Service	
• SINAUT ST7 through S7 communication	-
• PG-/OP-communication	Yes
Performance data multi-protocol mode	
Number of active connections with multiprotocol mode	-
Performance data telecontrol	
Suitability for use	
• node station	Yes
• substation	Yes
• control center	Yes
• note	-
Protocol is supported	
• TCP/IP	Yes
• DNP3	Yes
• SINAUT ST1 protocol	No
• SINAUT ST7 protocol	No
Number of DNP3 masters	
• with Ethernet maximum	8
• with RS 232 interface maximum	1
Product function data buffering if connection is aborted	Yes
• note	64 000 data points with one master
Product functions management, configuration	
Configuration software required	SINAUT ST7 ES
Storage location of TIM configuration data	On the CPU or TIM

© Siemens AG 2014

Ordering data

	Article No.
TIM 3V-IE DNP3 communications module With an RS232 interface for SINAUT communication via a conventional WAN and an IP-based network (WAN or LAN)	**6NH7803-3BA00-0AA0**
SINAUT Engineering Software V5.4 On CD-ROM, comprising • SINAUT ST7 Engineering Software V5.4 for the PG • SINAUT TD7 block library • Electronic manual in German and English	**6NH7997-0CA54-0AA0**
Accessories	
IE FC TP Standard Cable GP 2 x 2 (Type A) 4-core, shielded TP installation cable for connection to IE FC Outlet RJ45/IE FC RJ45 Plug; PROFINET-compatible; with UL approval; sold by the meter; max. length 1 000 m, minimum order quantity 20 m	**6XV1840-2AH10**
IE FC RJ45 Plug 180 RJ45 plug-in connector for Industrial Ethernet with a rugged metal housing and integrated insulation displacement contacts for connecting Industrial Ethernet FC installation cables; with 180° cable outlet; for network components and CPs/CPUs with Industrial Ethernet interface	
• 1 pack = 1 unit	**6GK1901-1BB10-2AA0**
• 1 pack = 10 units	**6GK1901-1BB10-2AB0**
• 1 pack = 50 units	**6GK1901-1BB10-2AE0**

	Article No.
IE FC Stripping Tool Preadjusted stripping tool for fast stripping of the Industrial Ethernet FC cables	**6GK1901-1GA00**
Connecting cable For connecting a TIM (RS 232) with a SINAUT ST7 MD2, MD3 or MD4 (RS 232) modem; cable length 1.5 m	**6NH7701-4AL**
Connecting cable For connecting a TIM (RS 232) with the GSM modem MD720-3; also suitable for third-party modems or radio equipment with standard RS 232 interface; cable length 2.5 m	**6NH7701-5AN**
Connecting cable with one end open for connecting a TIM (RS 232) to a third-party modem or radio unit (RS 232); cable length 2.5 m	**6NH7701-4BN**
Connecting cable For connecting two TIM modules via their RS 232 interface without modems ("null modem"); cable length 6 m	**6NH7701-0AR**

© Siemens AG 2014

Overview

In a station for the S7-CPU, the communication module TIM 4R-IE DNP3 (**T**eleControl **I**nterface **M**odule) handles the data exchange with the assigned SIMATIC PCS7 TeleControl V8.0 master system using the open DNP3 protocol. In addition, the V3.0 module now also supports master and node functionality.

- With the double-width S7-300 housing, the module can be fully integrated into the S7-300 system
- Can be connected as a stand-alone module to a SIMATIC S7-400 and SIMATIC S7-400 H System
- Two RS 232/RS 485 interfaces support connection of an external modem for data transmission via a conventional WAN or of a Modbus RTU slave to an S7-300 system
- The module has two RJ45 interfaces for data transmission via IP-based networks
- By using physically separate connection paths, the module permits media redundancy without loss of data during the switchover

Benefits

get Designed for Industry

- High plant availability by means of end-to-end redundancy
- Connection to DNP3 master systems from third-party vendors is possible by using the open protocol DNP3
- Saving of traveling and maintenance costs due to cost-effective remote programming, diagnostics, control and monitoring via the Internet
- Reduction in time and costs thanks to quick and user-friendly configuration of connections and data to be transferred with the SINAUT configuration software and block library
- Reliable back-up of important data;
  Storage of the DNP3 data points (max. 200 000 in the case of a master), including time stamp on the TIM if the communication path is faulty or a partner has failed

Application

- Low-cost automation of water/wastewater networks with both complex and simple structures
- Control and monitoring of energy distribution systems and supply stations, such as oil, gas or district heating networks
- Preventive maintenance (condition monitoring) of globally distributed systems
- Connection of plants with basic or high-level security and availability requirements
- Use in hybrid networks with wireless, Ethernet or Internet communications

Design

The TIM 4R-IE DNP3 offers all the advantages of the SIMATIC S7-300 design:

- Compact design with double-width S7-300 format
- Two 9-pin sub-D connectors with a combined RS232/RS485 interface for connection to a conventional WAN via an appropriate modem
- Two RJ45 sockets for connection to Industrial Ethernet or an IP-based network;
  industrial design with additional retaining collar, for connecting the IE FC RJ45 Plug 180
- 2-pin plug-in terminal strip for connection of the 24 V DC external supply voltage
- Front-panel LEDs for indicating the module status and the communication
- Easy installation;
  the TIM 4R-IE DNP3 is mounted on the DIN rail of the S7-300 and connected to adjacent modules by means of the bus connector supplied with the TIM. No slot rules apply.
  For connection of an S7-400 station, it is linked as a stand-alone device via one of its Ethernet ports with one or more S7-400 CPUs.
- Can be operated in the expansion rack (ER) in conjunction with the IM 360/361 interface modules
- Can be operated without a fan
- A backup battery and a memory module (C-PLUG) can be installed as options

© Siemens AG 2014

Function

- Data is transmitted using the open DNP3 protocol
- Media redundancy by the use of physically separated connection paths without the loss of data when switching over
- Extensive diagnostics functions including the option of logging the sent and received message frames
- Time-of-day synchronization with the assigned DNP3 master system is possible
- Remote programming in the case of IP-based networks
- Option for connecting a SIMATIC S7-400 and SIMATIC S7-400 H system
- Modbus RTU Master connected to a serial port

Also available with the new Version 3.0

- DNP3 Master
- DNP3 nodes;
  the module operates simultaneously as master and slave and, as a data concentrator, links the RTUs with the control center
- Peer-to-peer communication in the Ethernet-based network between the TIM modules used as DNP3 slaves
- Setting of DNP3 event classes (Class 1, Class 2 and Class 3)
- Routing between TIM modules
- Support of analog dialup modems (PSTN dialup)

The communications module TIM 4R-IE DNP3 has its own processor and a RAM for buffering up to 200 000 data points. This prevents any loss of data in the event of a fault on the communication link or the failure of a communication partner.

Diagnostics

The SINAUT diagnostics and service tool of the SINAUT ST7 Engineering Software V5.4 provides comprehensive diagnostic functions, including:

- Operating status of the TIM module
- Module status of the TIM module
- General diagnostic information
- Diagnostic buffer of the TIM module
- Status of the connections to remote communication partners (e.g. SIMATIC PCS7 TeleControl V7.1 SP2)
- Status and level of the transmit buffer
- TIM frame monitor for recording the frame traffic

Configuration

The SINAUT configuration software V5.4 is used for configuring the TIM 4R-IE DNP3 module. Parameters are assigned with the aid of the SINAUT configuration software in STEP 7 HW Config and STEP 7 Netpro.

Integration

The TIM 4R-IE DNP3 module is connected to a WAN via two floating RS232/RS485 interfaces, and specifically via various data communication devices depending on the application:

- Dedicated line modems for point-to-point, point-to-multipoint or line connections
- Analog dialup modems (V3.0 or higher)
- Fiber-optic cable modules (via RS485 converters)
- Wireless devices from various manufacturers

In addition, it is possible to connect a Modbus RTU slave to the S7-300 system via the TIM 4R-IE DNP3.

Via two RJ45 interfaces, the TIM 4R-IE DNP3 module can be connected to the Ethernet, i.e. to IP-based networks (LAN, IWLAN, DSL, GPRS, UMTS, etc.).

© Siemens AG 2014

Integration (continued)

Configuration examples in conventional and IP-based WAN

Use in a station with transmission via a dedicated line network

The connection to the master station is via the MD2 modem, which sets up the connection via a dedicated line.

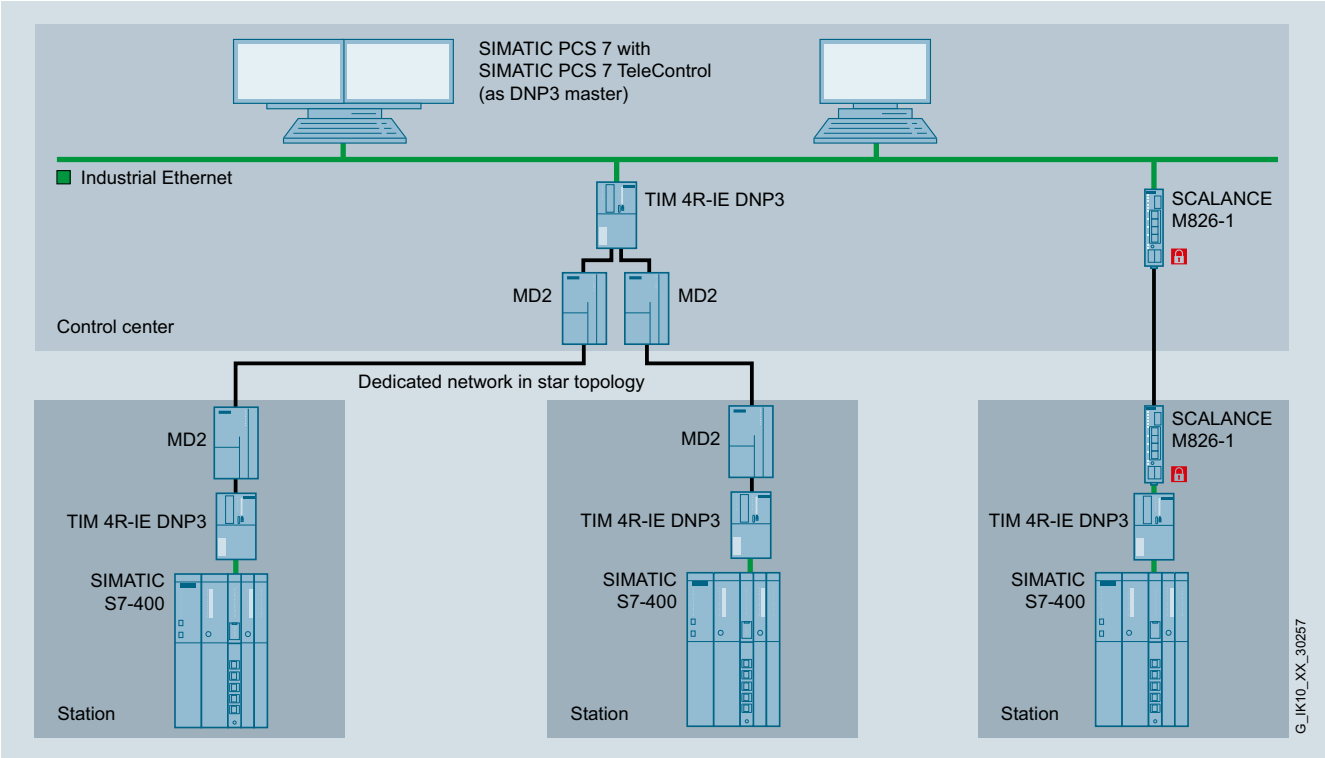

© Siemens AG 2014

Integration (continued)

Use in a station with transmission via Internet

The stations are connected by means of an Internet connection. In this case, DSL routers must be used in the station and control center – preferably in combination with SCALANCE S in order to establish secure connections using VPN tunnels.

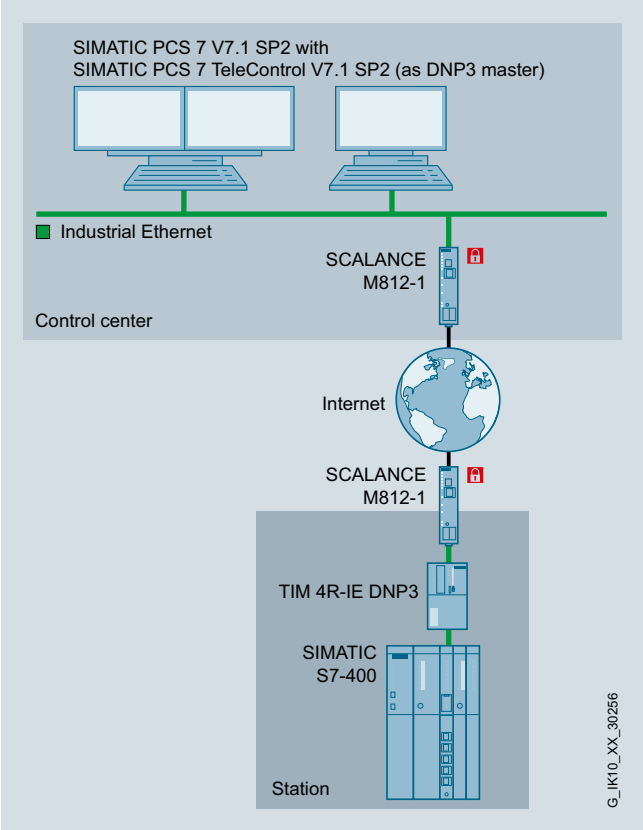

Use in a station with transmission over the GSM mobile telephone service GPRS or UMTS

The stations are connected via the GSM mobile telephone service GPRS. In this case the GPRS router MD741-1 is used in the station and a SCALANCE S security module is used in the control center which ensures that the VPN connections are set up with the GPRS stations.

For higher data rates, in place of the GRPS router MD741-1, the UMTS Router SCALANCE M875 can be implemented for use of the UMTS mobile radio network.

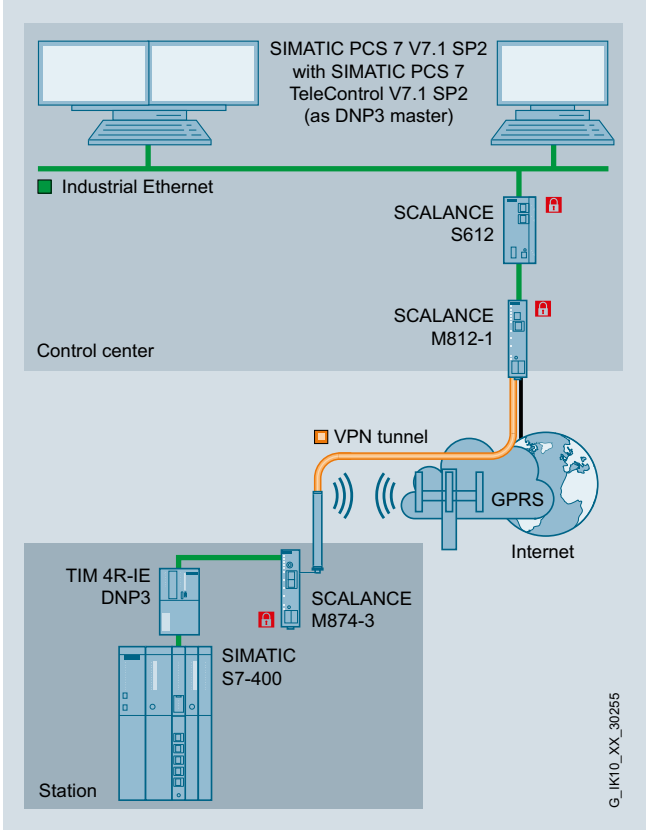

© Siemens AG 2014

Integration (continued)

Use in a station with path redundancy

The connection of the stations with a TIM 4R-IE DNP3 enables redundant connection paths to be set up. On the failure of the active connection (e.g. the Internet connection) a switch is made to the second connection path (e.g. WAN).

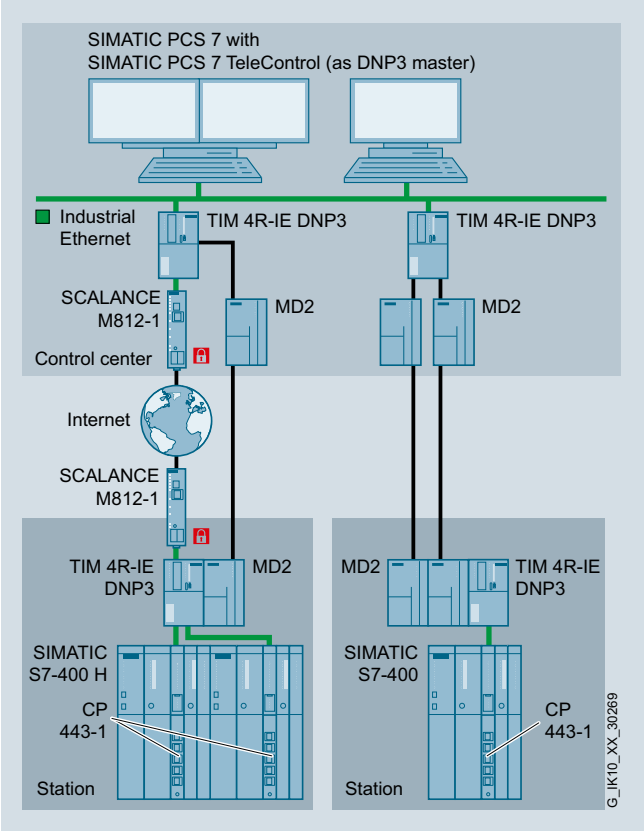

© Siemens AG 2014

Technical specifications

Article No.	6NH7803-4BA00-0AA0
Product-type designation	**TIM 4R-IE DNP3**
Transmission rate	
Transfer rate	
• for Industrial Ethernet	10 … 100 Mbit/s
• in accordance with RS 232	9 600 … 115 200 bit/s
Interfaces	
Number of interfaces according to Industrial Ethernet	2
Number of electrical connections	
• for external data transmission in accordance with RS 232	2
• for power supply	1
Design of electrical connection	
• the Industrial Ethernet Interface	RJ45 port
• at interface 1 • for external data transmission	9-pin Sub-D connector, RS232 switchable to RS485
• at interface 2 for external data transmission	9-pin Sub-D connector, RS232 switchable to RS485
• for power supply	2-pin, plug-in terminal strip
design of the removable storage C-PLUG	Yes
Supply voltage, current consumption, power loss	
Type of supply voltage	DC
Supply voltage	24 V
• minimum	20.4 V
• maximum	28.8 V
Consumed current	
• from backplane bus at 24 V for DC maximum	0.2 A
• from external supply voltage at 24 V with DC maximum	0.17 A
Resistive loss	4.6 W
Product expansion optional backup battery	Yes
Type of battery	Lithium AA / 3.6 V / 2.3 Ah
Backup current	
• typical	100 µA
• maximum	160 µA
Permitted ambient conditions	
Ambient temperature	
• during operating	0 … 60 °C
• during storage	-40 … +70 °C
• during transport	-40 … +70 °C
Relative humidity at 25 °C without condensation during operating maximum	95 %
Protection class IP	IP20
Design, dimensions and weight	
Module format	Compact module S7-300 double width
Width	80 mm
Height	125 mm
Depth	120 mm
Net weight	0.4 kg

Article No.	6NH7803-4BA00-0AA0
Product-type designation	**TIM 4R-IE DNP3**
Product properties, functions, components general	
Number of modules note	Number of TIMs per S7-300 / S7-400: 1
Cable length	
• with RS 232 interface maximum	6 m
• with RS 485 interface maximum	30 m
Performance data	
Performance data S7 communication	
Number of possible connections for S7 communication	
• maximum	5
• with PG connections maximum	2
• with OP connections maximum	1
Number of possible connections for S7 communication note	only via LAN
Service	
• SINAUT ST7 through S7 communication	-
• PG-/OP-communication	Yes
Performance data telecontrol	
Acceptability for application	
• node station	Yes
• substation	Yes
• control center	Yes
Suitability for use note	-
Protocol is supported	
• TCP/IP	Yes
• DNP3	Yes
• SINAUT ST1 protocol	No
• SINAUT ST7 protocol	No
Number of DNP3 masters	
• with Ethernet maximum	8
• with RS 232 interface maximum	1
Product function data buffering if connection is aborted	Yes
• note	200 000 data points with one master
Product functions management, configuration	
Configuration software required	
Storage location of TIM configuration data	On the CPU or TIM
Product functions Time	
Product component Hardware real-time clock	Yes
Product property battery-backed hardware real-time clock	Yes
Accuracy of hardware real-time clock per day maximum	4 s

© Siemens AG 2014

Ordering data

	Article No.
TIM 4R-IE DNP3 communications module With two combined RS 232/RS 485 interfaces for SINAUT communication via conventional WANs and two RJ45 interfaces for SINAUT communication via IP-based networks (WAN or LAN)	**6NH7803-4BA00-0AA0**
SINAUT Engineering Software V5.4 On CD-ROM, comprising • SINAUT ST7 Engineering Software V5.4 for the PG • SINAUT TD7 block library • Electronic manual in German and English	**6NH7997-0CA54-0AA0**
Accessories	
Backup battery 3.6 V/2.3 Ah for TIM 4R-IE DNP3	**6ES7971-0BA00**
IE FC TP Standard Cable GP 2 x 2 (Type A) 4-core, shielded TP installation cable for connection to IE FC Outlet RJ45/IE FC RJ45 Plug; PROFINET-compatible; with UL approval; sold by the meter; max. length 1 000 m, minimum order quantity 20 m	**6XV1840-2AH10**
IE FC RJ45 Plug 180 RJ45 plug-in connector for Industrial Ethernet with a rugged metal housing and integrated insulation displacement contacts for connecting Industrial Ethernet FC installation cables; with 180° cable outlet; for network components and CPs/CPUs with Industrial Ethernet interface	
• 1 pack = 1 unit	**6GK1901-1BB10-2AA0**
• 1 pack = 10 units	**6GK1901-1BB10-2AB0**
• 1 pack = 50 units	**6GK1901-1BB10-2AE0**

	Article No.
IE FC Stripping Tool Preadjusted stripping tool for fast stripping of the Industrial Ethernet FC cables	**6GK1901-1GA00**
Connecting cable For connecting a TIM (RS 232) with a SINAUT ST7 MD2, MD3 or MD4 (RS 232) modem; cable length 1.5 m	**6NH7701-4AL**
Connecting cable For connecting a TIM (RS 485) with a SINAUT ST7 MD2, MD3 or MD4 (RS485) modem; cable length 1.5 m	**6NH7701-4DL**
Connecting cable For connecting a TIM (RS 232) with the GSM modem MD720-3; also suitable for third-party modems or radio equipment with standard RS 232 interface; cable length 2.5 m	**6NH7701-5AN**
Connecting cable with one end open for connecting a TIM (RS 232) to a third-party modem or radio unit (RS 232); cable length 2.5 m	**6NH7701-4BN**
Connecting cable For connecting two TIM modules via their RS 232 interface without modems ("null modem"); cable length 6 m	**6NH7701-0AR**
SITOP compact 24 V/0.6 A 1-phase power supply with wide-range input 85 to 264 V AC/110 to 300 V DC, stabilized output voltage 24 V, rated output current value 0.6 A, slim design	**6EP1331-5BA00**

© Siemens AG 2014

Overview

IEC 60870-5-101, IEC 60870-5-103 and IEC 60870-5-104 are standardized vendor-independent protocols.

For implementing an RTU (**R**emote **T**elecontrol **U**nit) with IEC 60870-5 on the basis of SIMATIC, the CP 1243-1 IEC for SIMATIC S7-1200 and the SIPLUS RIC software bundle are offered.

Telecontrol communications processors

CP 1243-1 IEC

The CP 1243-1 IEC (IEC 60870-5-104 protocol) is an Industrial Remote Communication module for telecontrol substations with SIMATIC S7-1200. It has an RJ45 interface, which allows communication over IP-based networks.

SIPLUS RIC

With SIPLUS RIC, the IEC protocols can be parameterized with SIMATIC Manager without the need for additional installations.

As a result, SIMATIC controllers can also communicate with non-Siemens products.

The SIPLUS RIC bundles usually comprise:

- CPU
- Interface/communication module (if necessary)
- Memory card
- CD with library and registration code.

SIPLUS RIC products require additional material to establish telecommunication links, e.g. TCP/IP converters – serial, dedicated line modems, media converters, SCALANCE M industrial routers, SCALANCE S security modules, SCALANCE X Ethernet network components, cables etc.

© Siemens AG 2014

Overview (continued)

Configuration examples

In order to implement telecontrol networks, basic topologies including point-to-point, multi-point, star and ring can be configured using classic or TCP/IP-based media. These can be combined flexibly independent from existing infrastructure.

Classic WAN media (IEC 870-5-101 telecontrol protocol)

- Dedicated line via modem, e.g. SINAUT MD2
- Dedicated line over fiber-optic cables
- Private wireless networks

TCP/IP-based WAN media (IEC 870-5-104 telecontrol protocol)

- Ethernet networks, e.g. SCALANCE X with fiber-optic cables
- Industrial Wireless LAN with SCALANCE W
- Public networks and internet using SCALANCE M industrial routers
- Satellite communication, e.g. with Inmarsat

S7-1200 substations can be connected to an IEC-capable control center using CP 1243-1 IEC over the Industrial Ethernet interface and an external router, e.g. SCALANCE M via a WAN network.

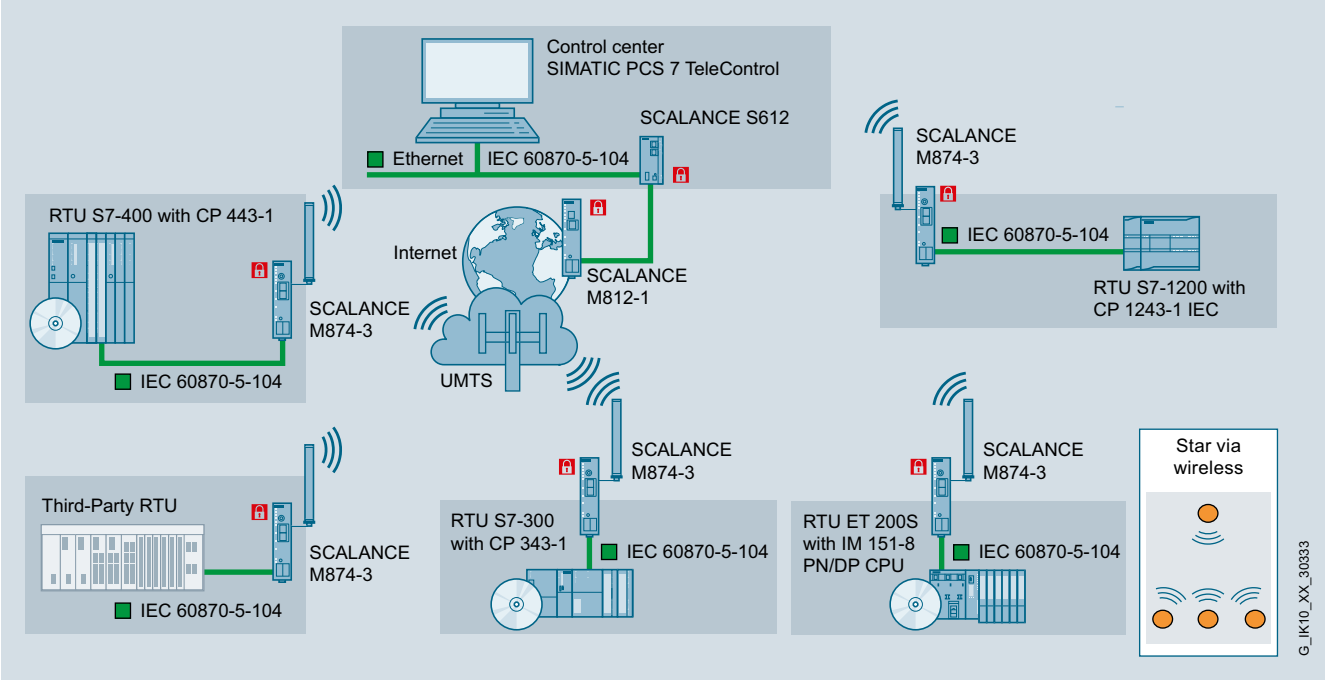

IEC 870-5-104 – example of TCP/IP-based WAN with GPRS radio network (star topology)

© Siemens AG 2014

Overview

The CP 1243-1 IEC communications processor is used to connect a SIMATIC S7-1200 to a control center system via the IEC 60870 protocol and has the following characteristics:

- Support for the established communication standard in accordance with IEC 60870-5-104 for standardized linking of the SIMATIC S7-1200 to WinCC, PCS 7, or other commercially available control center systems
- Data transfer of measured values, control variables, or alarms optimized for telecontrol systems
- Automatic sending of alert emails
- Clearly laid out LED signaling for fast and easy diagnostics
- Compact industrial enclosure in S7-1200 design for mounting on a standard mounting rail
- Fast commissioning thanks to easy configuration using STEP 7
- Data buffering of up to 64 000 values ensures a secure database even with temporary connection failures

Benefits

get Designed for Industry

- **Data security**
  The CP 1243-1 IEC has a large buffer for several thousand data values. Downtimes in the transmission link can then be bridged.
- **Fully automatic time stamp**
  To enable subsequent and correct archiving of process data in the control system, all data frames are assigned with a time stamp at their place of origin.
- **Fast and flexible data communication**
  Operators are therefore quickly provided with alarms, statuses and values from the process, and they can influence process control by entering commands or setpoints at any time.
- **Simple and low-cost engineering**
  The cyclic or event-controller transfer of measurements, setpoints or alarms can be implemented in only a few operations and without programming effort.
- **Remote diagnostics**
  Saving of traveling and maintenance costs due to cost-effective remote programming, diagnostics, control and monitoring via the Internet

Application

By using the CP 1243-1 IEC, the S7-1200 can be used as a remote terminal unit (substation) in telecontrol applications. Typical uses include the collection of measured values in geographically widely distributed outdoor areas (level measurement for water tanks) or centralized opening and closing of valves (oil/gas transport in pipelines).

- Plants in water, wastewater or environmental sectors:
  - Irrigation systems
  - Drinking water supply
- Monitoring of power networks for consumption metering and cost control
  - District heating networks
  - Wind farms
- Plants in the oil and gas sector
  - Oilfield water injection
  - Pipelines
- Traffic control systems
- Building monitoring
- Weather stations
- Wind energy and photovoltaic plants
- Environmental monitoring equipment
- Intelligent billboards

Design

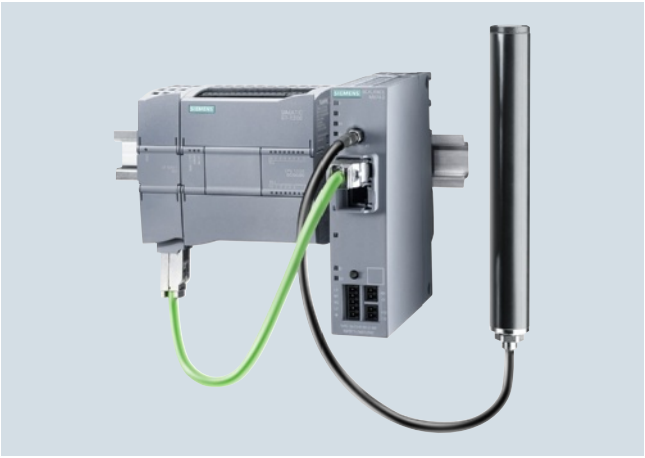

The CP 1243-1 IEC offers all the advantages of the S7-1200 design:

- Rugged, compact plastic enclosure
- Easily accessible connection and diagnostics elements, protected by front flaps
- Simple mounting on the mounting rail of the S7-1200

The CP 1243-1 IEC is plugged into the left-hand system bus interface of the S7-1200. Power is supplied directly via the S7-1200. No additional wiring is necessary. Any required modems or routers are connected via the Ethernet interface on the underside of the module.

© Siemens AG 2014

Function

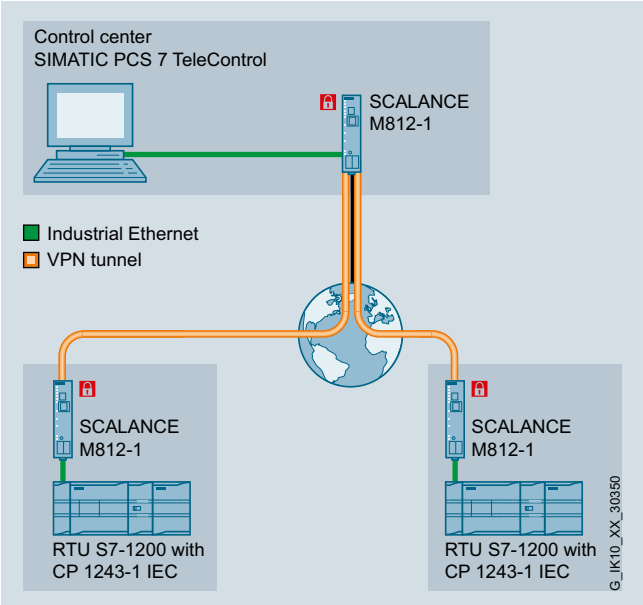

Linking of S7-1200 to PCS 7 via DSL-based IEC connection.

Completely configurable application through "data point configuration"

The introduction of the "data point configuration" in STEP 7 dispenses with all programming effort for transfer of data to the control center.

The data of the CPU relevant to the control center is selected via user-friendly "item browsing" in STEP 7. In a clearly-arranged menu, the data transfer parameters are then assigned to the data points selected in this way. The cyclic or event-controller transfer of measurements, setpoints or alarms can thus be implemented in only a few operations and without programming effort.

Data backup

Data losses are prevented by the data buffering mechanisms integrated in the product.

In the event of a connection failure, up to 64 000 time-stamped values are buffered. When the connection returns, the buffered values are automatically transferred to the control center in the right order.

E-mail alerting

Alert e-mails can be configured for timely provision of stations' states to service or maintenance personnel. If previously defined events (such as threshold violation) should occur, application-specific information is sent automatically by e-mail.

Diagnostics

The CP 1243-1 IEC offers comprehensive diagnostic options for a quick and informative analysis of the station status. Elementary diagnostic information about the connection to the control center is signaled directly via LEDs at the CP.

Using STEP 7, comprehensive information can be retrieved, such as connection history, buffer status, and the transferred measured values.

IEC 60870 standard

Communication with the control center is based on the established communication standard in accordance with IEC 60870-5-104. This ensures that telecontrol and instrumentation and control devices and systems from Siemens or other vendors can communicate with each other without any fundamental adaptation developments. The degrees of freedom of the standard allow different vendor-specific profiles (e.g. the frame types and functions used). The profiles can be coordinated with each other with the help of an interoperability list. This standard has become widely used, especially in European and Asian areas. The IEC 60870-5-104 telecontrol protocol is also suitable as a field or station bus. Use as a station bus also enables direct communication between the individual devices.

Remote maintenance

For remote access from the control center to the substation, the CP provides a remote maintenance port in parallel with process operation. This ensures access for monitoring and program changes.

Interfaces

The CP 1243-1 IEC has an Ethernet interface for connection to the control center. The S7-1200 can be connected directly via an existing network or via other media by using additional routers (e.g. SCALANCE M for mobile wireless communication).

Power supply

Extra wiring for the CP power supply is not required. Power is supplied directly via the backplane bus of the S7-1200.

© Siemens AG 2014

Technical specifications

Article No.	6GK7243-1PX30-0XE0
Product-type designation	**CP 1243-1 IEC**
Transmission rate	
Transfer rate	
• at the interface 1	10 … 100 Mbit/s
Interfaces	
Number of electrical connections	
• at interface 1 in accordance with Industrial Ethernet	1
Design of electrical connection	
• at interface 1 in accordance with Industrial Ethernet	RJ45 port
Supply voltage, current consumption, power loss	
Type of supply voltage	DC
Supply voltage 1 from backplane bus	5 V
Resistive loss	1.25 W
Permitted ambient conditions	
Ambient temperature	
• for vertical installation during operating phase	-20 … +60 °C
• for horizontal installation during operating phase	-20 … +70 °C
• during storage	-40 … +70 °C
• during transport	-40 … +70 °C
• Comment	-
Relative humidity at 25 °C without condensation during operating maximum	95 %
Protection class IP	IP20
Design, dimensions and weight	
Module format	Compact module S7-1200 single width
Width	30 mm
Height	110 mm
Depth	75 mm
Net weight	0.122 kg
Product properties, functions, components general	
Number of modules	
• per CPU maximum	3

Article No.	6GK7243-1PX30-0XE0
Product-type designation	**CP 1243-1 IEC**
Performance data	
Performance data S7 communication	
Number of possible connections for S7 communication	
• note	like CPU
Performance data telecontrol	
Suitability for use	
• node station	No
• substation	Yes
• control center	No
• note	-
Connection to the control center	
• note	
• by means of a permanent connection	supported
Protocol is supported	
• DNP3	No
• IEC 60870-5	Yes
Product function data buffering if connection is aborted	Yes
• note	64 000 values
Number of data points per station maximum	200
Performance data Teleservice	
Diagnostic function online diagnostics with SIMATIC STEP 7	Yes
Product function	
• program download with SIMATIC STEP 7	Yes
• remote firmware update	Yes, CPU V4 or higher
Product functions management, configuration	
Configuration software required	STEP 7 V13 (TIA Portal) and higher
Product functions Time	
Protocol is supported NTP	No

© Siemens AG 2014

Ordering data

	Article No.
CP 1243-1 IEC communications processor Communications processor for connecting SIMATIC S7-1200 to a control center via the IEC 60870-5-104 protocol	**6GK7243-1PX30-0XE0**
Accessories	
Compact Switch Module CSM 1277 Unmanaged switch for connecting a SIMATIC S7-1200 and up to three further nodes to Industrial Ethernet with 10/100 Mbit/s; 4 x RJ45 ports; external 24 V DC power supply, diagnostics LEDs, S7-1200 module including electronic manual on CD-ROM	**6GK7277-1AA10-0AA0**
IE FC RJ45 plugs RJ45 plug connector for Industrial Ethernet with a rugged metal housing and integrated insulation displacement contacts for connecting Industrial Ethernet FC installation cables; with 180° cable outlet; for network components and CPs/CPUs with Industrial Ethernet interface	
• 1 pack = 1 unit	**6GK1901-1BB10-2AA0**
• 1 pack = 10 units	**6GK1901-1BB10-2AB0**
• 1 pack = 50 units	**6GK1901-1BB10-2AE0**
IE FC TP Standard Cable GP 2 x 2 (Type A) 4-core, shielded TP installation cable for connection to IE FC Outlet RJ45/IE F RJ45 Plug; PROFINET-compatible; with UL approval; sold by the meter; max. length 1 000 m, minimum order quantity 20 m	**6XV1840-2AH10**

	Article No.
Accessories *(continued)*	
IE FC stripping tool Preadjusted stripping tool for fast stripping of Industrial Ethernet FC cables	**6GK1901-1GA00**
STEP 7 Basic Engineering Software V13 (TIA Portal) *Target system:* SIMATIC S7-1200, S7-1500, S7-300, S7-400, WinAC *Requirement*: Windows 7 Professional (64-bit), Windows 7 Enterprise (64-bit), Windows 7 Ultimate SP1 (64-bit), Windows 8.1 (64-bit), Windows 8.1 Professional (64-bit), Windows 8.1 Enterprise (64-bit), Windows Server 2008 R2 StdE (full installation), Windows Server 2012 StdE (full installation) *Form of delivery*: German, English, Chinese, Italian, French, Spanish	
• STEP 7 Basic V13, Floating License	**6ES7822-0AA03-0YA5**
• STEP 7 Basic V13, Trial License	**6ES7822-0AA03-0YA7**
• Upgrade STEP 7 Basic V12 to STEP 7 Professional Basic V13, Floating License	**6ES7822-0AA03-0YE5**
Software Update Service For a period of 12 months and for a fixed price, the customer is automatically provided with all upgrades and service packs for each installed software package. The contract is automatically extended by a further year unless canceled at least 12 weeks prior to expiration. Requires the current software version.	
• STEP 7 Basic V1x, Software Update Service Standard 1 year;	**6ES7822-0AA00-0YL0**
• STEP 7 Basic V1x, Software Update Service Compact, 1 year;	**6ES7822-0AA00-0YM0**

More information

Technical requirements/compatibility

An S7-1200 CPU with firmware version 3 is required for operating the CP 1243-1 IEC.

The CP 1243-1 IEC is configured using TIA Portal STEP 7 V13.

To connect to PCS 7/WinCC control center systems, the relevant telecontrol packages to support the IEC standard are required.

© Siemens AG 2014

Overview

Teleservice (remote diagnostics and remote maintenance)

Teleservice is data exchange with physically remote technical plants (machines, plants, computers, etc.) for the purpose of error detection, diagnostics, maintenance, repair, or optimization.

Machines and plants are increasingly operated in places which are far away from the supplier's premises. Despite this, plant builders must offer services to deal with faults or for preventive maintenance. During the warranty period in particular this can result in high costs. Teleservice helps to reduce this risk significantly.

There is a variety of possible applications for Teleservice. Plants can be diagnosed, values set and data transmitted from anywhere in the world via a telephone cable. Teleservice also enables the SIMATIC controllers to send text messages per SMS or e-mail, making a significant contribution to saving travel and personnel costs in service work.

Teleservice via IP-based networks

Optimum remote maintenance is based on reliable, permanently available, secured and economical data connections.

Depending on the application, SIMATIC NET provides the appropriate solution:

- For continuous connections or simultaneous access to several plants, a solution using the SCALANCE S and SCALANCE M security and communication components is recommended, both on the service and the plant side.
- For flexible access for remote maintenance from any Internet connection - whether in the office, home office or hotel room – SOFTNET Security Client is the right software solution for establishing a secure connection to the plants.
- For plants without a wired network connection, the SCALANCE M wireless router establishes remote maintenance access to the SCALANCE S in the service center.

In all cases, the communication is reliably protected by authentication and encryption via a VPN tunnel (**V**irtual **P**rivate **N**etwork) in order to rule out the possibility of attacks from outside.

Siemens Remote Services

The service concept of "Siemens Remote Services" provides a powerful, secure platform for remote access to machines and plants. The inclusion of "shared experts" ensures effective support, not only from Siemens but also from the company's own specialists.

© Siemens AG 2014

Overview

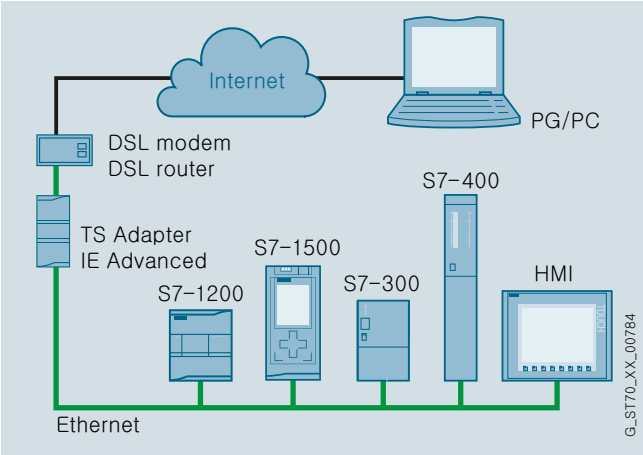

TS Adapter IE Advanced with WAN

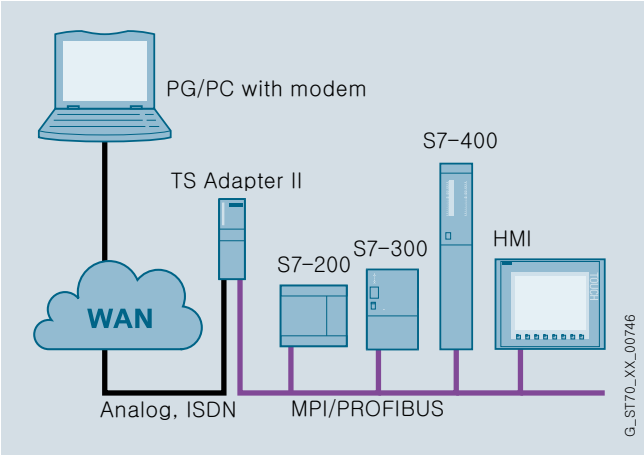

Teleservice with TS Adapter II

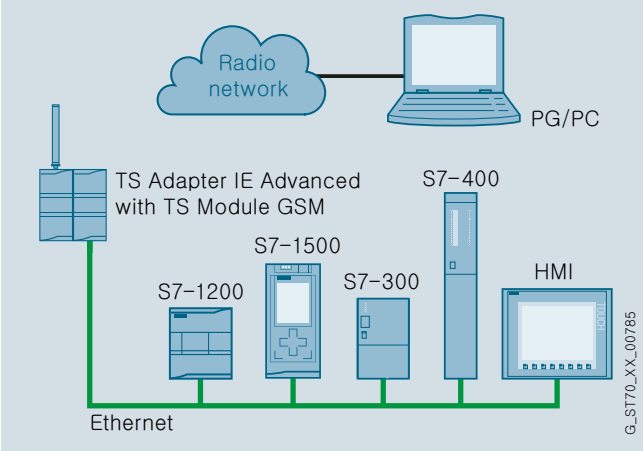

Teleservice with TS Adapter IE Advanced

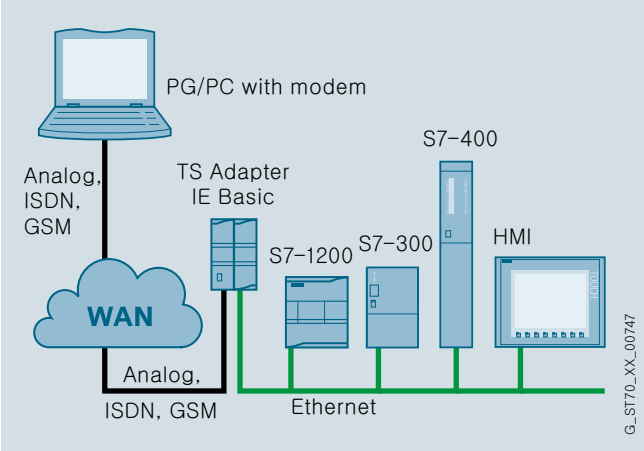

Teleservice with TS Adapter IE Basic

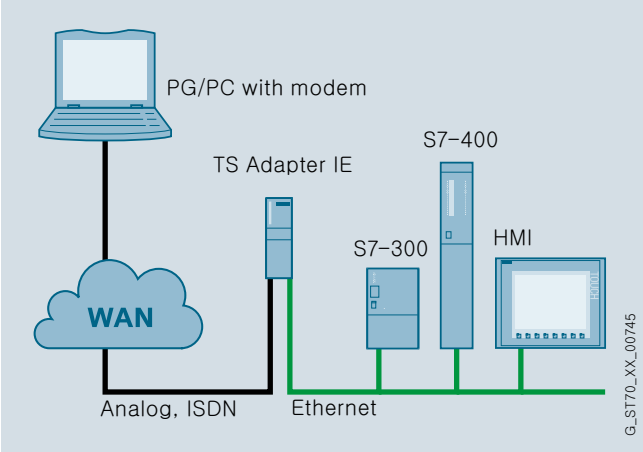

Teleservice with TS Adapter IE

- For performing remote maintenance:
  A programming device/PC with an engineering tool such as STEP 7, or the TIA Portal can access automation components (e.g. S7 CPUs) which are connected to the appropriate adapters over Industrial Ethernet or PROFIBUS.
- Comprising the TeleService software and various adapters:
  - TS Adapter II for connection to PPI, MPI or PROFIBUS DP
  - TS Adapter IE, TS Adapter IE Basic or TS Adapter IE Advanced for connection to Industrial Ethernet
- Additional functions with TS Adapter II:
  - Establishing a connection from/to remote plants, e.g. for calling up process data from an automation system (PG-to-AS remote coupling).
  - Exchanging data between plants (AS-to-AS remote coupling):
    Exchange of process data between two SIMATIC automation systems.
  - Sending a text message:
    Sending a text message from a SIMATIC automation system via a GSM wireless modem.

© Siemens AG 2014

Overview (continued)

- Additional functions with TS Adapter IE:
  - Remote operation of HMI devices:
    Access to the HMI device via an Internet browser installed on the adapter
  - Sending e-mails:
    Establishing a modem link to a dial-up server (e.g. to an Internet service provider): A SIMATIC CPU can send e-mails over an e-mail server that can be accessed in this manner.
  - Standard routing:
    A modem link can be established to an Internet service provider for accessing data on the Internet.
- Additional functions with TS Adapter IE Advanced:
  - Remote connection via the Internet

Application

With TeleService, remote servicing of SIMATIC S7 automation systems or HMI devices is possible using the programming device or PC over a fixed line/wireless network or via the Internet (TS Adapter IE Advanced). With the help of TeleService, the connection to the automation components is extended over the telephone network to the programming device or PC. The functions to be performed, such as programming, are completed using the same tools and functionality as if the job was being done locally. The user has access to the familiar functions of STEP 7 and the engineering tools, comparable to a local connection.

TeleService increases the effective availability of plants and machines. Access through TeleService means that technical services (e.g. maintenance, updating, and troubleshooting) can be performed cost-effectively from a central service center.

Apart from teleservice, a remote link to a programming device or PC can be established program-controlled using a function block call. This link allows process data to be exchanged between an S7 CPU and the programming device or PC with support from PRODAVE.

Design

Different components are required depending on the TeleService function or TS Adapter.

For remote maintenance:

- TeleService engineering software
  (not required when using the TIA Portal)
- A programming device/PC-side modem
  (TS Adapter II, TS Adapter IE or TS Adapter IE Basic)
- Internet access on the programming device/PC side
  (TS Adapter IE Advanced)
- A TS Adapter, line-side

Required in addition to the components for remote maintenance in the case of PG/PLC remote coupling:

- PRODAVE V5.0 and higher for PG/PC:
  Toolbox for process data traffic between SIMATIC S7/C7 and the PC for autonomous processing of data traffic
- "PG_DIAL" function block (included in TeleService software package) for the PLC
- A TS Adapter II, line-side

Required in addition to the components for remote maintenance in the case of PLC/PLC remote coupling:

- TS Adapter for the second PLC
- "AS_DIAL" function block (included in TeleService software package) for the PLCs
- A TS Adapter II, line-side

For sending SMSes:

- Engineering Software TeleService Version 5.2 and higher
- GSM wireless modem on line side, Hayes-compatible
- TS Adapter II, line-side
- Modem cable for connecting the TS Adapter and modem (included in TS Adapter II package)

For sending e-mails:

- Engineering Software TeleService Version 6.1 and higher or TIA portal
- TS Adapter IE, TS Adapter IE Basic or TS Adapter IE Advanced, line-side
- Internet service provider and an e-mail server that can be accessed there

For remote control of HMI devices:

- PG/PC with browser – e.g. Internet Explorer – and the Sm@rtViewer
- TS Adapter IE, TS Adapter IE Basic or TS Adapter IE Advanced, line-side
- SIMATIC HMI device with an installed Runtime option of WinCC flexible /Sm@rtService or /Sm@rtAccess.
  For further information on WinCC flexible and the Sm@rt options, see http://www.siemens.com/simatic-wincc-flexible

© Siemens AG 2014

Design (continued)

TS Adapter II

Main features of TS Adapter II:

- Single-width standard S7-300 housing
- Mounted onto DIN or S7-profile rail, therefore no time-consuming cabinet installation required using a mounting plate
- Integral modem, either analog or ISDN as required
- USB interface for parameterization. This interface can also be used locally as a programming interface for the connected devices
- Serial RS232 interface for connecting external modems (e.g. wireless modem)
- Firmware with update capability
- Power supply over MPI or over external 24 V power supply
- Connection of an external modem, e.g. a GSM wireless modem, over serial interface
- Can be connected to:
  - MPI
  - PROFIBUS DP up to 12 Mbit/s (previously 1.5 Mbit/s)
  - PPI

Scope of delivery:

The following components are supplied with the TS Adapter II:

- DVD with driver
- TeleService software V6.1 (Can be used for 14 days). For further operation, a license is required)
- MPI cable, 0.8 m, for connecting the adapter to the MPI/DP interface
- Standard telephone cable, 3 m, with RJ12 connectors (only for TS Adapter II modem)
- Standard telephone cable, 3 m, with RJ45 connectors (only for ISDN TS Adapter II)
- TAE6N plug (only for TS Adapter II modem)

When using the TS Adapter II modem outside Germany, a standard national telephone plug can be snapped onto the RJ12 connector. A TAE6N connector is supplied for Germany. In some countries, telephone sockets with RJ12 sockets are available, in which case telephone cables can be used without the need for a telephone plug.

For operation, TeleService Software Version 6.0 is required.

TS Adapter IE

Main features of TS Adapter IE:

- Single-width standard S7-300 housing
- Mounting on DIN or S7 rail
- Integral modem, either analog or ISDN as required
- Firmware with update capability
- Power supply over external 24 V power supply
- Serial interface for connection of an external modem, e.g. a GSM wireless modem
- An RJ45 Ethernet interface (10/100 Mbit/s)
- Industry-compatible in accordance with SIMATIC standard

Parameterization:

The TS Adapter IE can be parameterized locally or over a remote link. TeleService software V6.1 or an Internet browser is used for this purpose.

The firewall is parameterized easily by selecting and deselecting the appropriate services with a click of the mouse button.
In "expert mode", the adapter can also be parameterized like a standard router.

Security:

Only dial-in access is possible: The service engineer dials into the adapter using a supplied telephone number. Authentication is performed by means of a user log-in with a password and Challenge Handshake Authentication Protocol (CHAP).
Up to 8 user accounts can be created with different log-ins and passwords.

As an option, e.g. for security reasons or to save telephone charges, the TS Adapter IE will interrupt the connection following correct authentication and call the user back on the telephone number stored in the TS Adapter IE.

The implemented firewall protects the plant from unauthorized access over the Internet. By default, the firewall only permits S7 communication. The required services, e.g. Sm@rt-Access, Sm@rt-Service or PCAnywhere, can be individually enabled during parameterization. For sending e-mails, it is necessary to enable the SMTP protocol and to set the parameters for outgoing calls. It is also possible to block all incoming data packets during connection to the Internet.

Scope of delivery:

The following components are supplied with the TS Adapter IE:

- CD with drivers and TeleService V 6.1 software (can be used for 2 weeks without a license) including standard software for sending e-mails from S7 CPUs
- Standard telephone cable, 3 m, with RJ12 connectors (only for TS Adapter IE modem)
- Standard telephone cable, 3 m, with RJ45 connectors (only for ISDN TS Adapter IE)
- TAE6N plug (only for TS Adapter IE modem)

When using the analog TS Adapter IE outside Germany, a standard country-specific telephone plug can be snapped onto the RJ12 connector. A TAE6N connector is supplied for Germany. In some countries, telephone sockets with RJ12 sockets are available, in which case telephone cables can be used without the need for a telephone plug.

© Siemens AG 2014

Design (continued)

TS Adapter IE Basic

The TS Adapter IE Basic in SIMATIC S7-1200 design is optimized for operation with SIMATIC S7-1200. It can also be used with S7-300 and S7-400. The adapter has a modular design and comprises the following:

- Basic unit TS Adapter IE Basic
- TS module
  - TS module modem:
    Contains an analog modem for the connection to the analog telephone network
  - TS module ISDN:
    Contains a terminal adapter for the connection to the ISDN network
  - TS module RS232:
    With RS232 interface for connecting an external modem
  - TS module GSM:
    Contains a wireless modem for connecting to the GSM/GPRS network

Only the combination of a basic unit TS Adapter IE Basic and a TS module forms a complete functional unit (total unit). Basic unit and TS module are connected via a connector and assembled together.

The functions of the TS Adapter are implemented in the basic unit. The basic unit has an Ethernet interface for connecting to PGs, PCs, or automation system. The basic unit is supplied with 24 V DC and grounded via a socket board.

The TS modules form the electrical interface to the telephone network. They are supplied with electricity from the basic unit through the shared connector.

TS Adapter IE Basic (basic unit) and the TS module can be installed differently:

- Installing on the S7-300 standard rail. This requires an optionally available standard sectional rail adapter
- Installation on a standard rail
- Wall mounting
- Enclosure mounting

Product package

The following are supplied with the basic unit TS Adapter IE Basic:

- DVD "SIMATIC TeleService Edition" with software and documentation
- Support collar for Ethernet plug

TS Adapter IE Advanced

The TS Adapter IE Advanced makes it possible to access via the Internet all plant automation components, such as S7-CPUs, which are connected to Industrial Ethernet. To facilitate this a TIA Portal Version V12 SP1 or higher is required which runs on a programming device/PC under Windows 7 or Windows Server 2008.

TS Adapter IE Advanced connection types:

- Direct connection to programming device/PC:
  The TS Adapter IE Advanced can be parameterized with direct connection to the programming device/PC via Ethernet (LAN)
- Connection to the GSM network (GPRS):
  For connection to the GSM network, the TS Adapter IE Advanced must be operated together with the TS module GSM
- Connection to the Internet via DSL:
  For connection to the Internet, a DSL router must be operated at the WAN port of the TS Adapter IE Advanced
- Connection to the company network:
  Connection to the company network takes place directly at the WAN port of the TS Adapter IE Advanced

The TS Adapter IE Advanced has the following technical features:

- Standard S7-1200 housing, with 55 mm width
- Direct connection to system network (Industrial Ethernet); 2 ports (LAN)
- Connection to public grid; 1 port (WAN)
- 24 V DC connection
- Plug-in TS modules

Types of installation

There are three alternative methods for mounting the TS Adapter IE Advanced:

- On the standard rails of the S7-300 with mounting rail adapters that can be ordered separately
- On a standard DIN rail
- Wall mounting

Product package

- TS Adapter IE Advanced
- CD "TS Adapter IE Advanced" with documentation, open-source components and default certification

© Siemens AG 2014

Function

TeleService is stand-alone software and does not require the installation of other software products such as STEP 7.

When using the TIA Portal, the TeleService software is not required because the functions are already a component part of the TIA Portal.

The following functions are available for remote maintenance with TeleService:

- Support for the TS Adapter II, TS Adapter IE and TS Adapter IE Basic
- Parameterization of the modem:
  On the PG/PC side, parameterization using Windows tools is supported. On the line side, the TS Adapter (with default settings) performs parameterization
- Electronic telephone book:
  To support the administration of plants (e.g. telephone number, location)
- Multi-level access protection:
  Prevents unauthorized connection build-up to a plant by means of a password and/or callback telephone number (callback function)
- Callback function:
  The plant calls the service center back automatically following a TeleService call
- Routing of the PG functionality:
  Routing over TeleService is supported in the same manner as for a local connection. S7/M7 CPUs and CP modules with routing capability are required for this purpose
- Import/export of the TS Adapter parameters:
  The parameters can be saved in a file (*.tap) on the PG/PC and reloaded
- Authorization via the Automation License Manager
- Runs under Windows XP Professional, Windows Vista and Windows 7

TS Adapter II; TS Adapter IE and TS Adapter IE Basic provide additional functions

TS Adapter II:

- Establishing a connection from/to remote plants, e.g. for calling up process data from an automation system (PG-to-AS remote coupling)
- Exchange of data between plants (AS-to-AS remote link)
- Exchange of process data between two SIMATIC automation systems
- Sending a text message
- Sending a text message from a SIMATIC automation system via a GSM wireless modem

TS Adapter IE:

- Remote control of HMI devices:
  The TS Adapter IE in combination with a browser installed on the PG/PC (e.g. Internet Explorer) and the Sm@rtViewer supports access over the telephone network to a SIMATIC HMI device with an installed Runtime option of WinCC flexible /Sm@rtService or /Sm@rtAccess. The HMI device or machine/plant can then be remotely controlled from the PG/PC.
- Sending e-mails:
  The function block AS_MAIL (included in the scope of supply of the adapter or TeleService V6.1) can be used to send e-mails directly from a SIMATIC CPU over the TS Adapter IE. The TS Adapter IE builds up an outgoing modem connection to a dial-up server for this purpose, e.g. to an Internet service provider, and sends the e-mails via an e-mail server that can be accessed there. If the provider offers the service for converting e-mails to text messages, text messages can also be sent in this manner.
- Standard routing:
  The TS Adapter IE allows a modem link to be established to an Internet service provider for accessing data on the Internet over this link. While the link is established, telephone dial-up and therefore remote maintenance and remote control is not possible.

TS Adapter IE Basic (in conjunction with a TS module)

- Remote maintenance over the telephone network:
  The TS Adapter IE Basic enables an application running on the PG/PC, such as STEP 7, to access Industrial Ethernet-connected S7 and C7 automation components over the phone network. For this, the TS Adapter IE Basic requires the following:
  - A connection to the automation components via Industrial Ethernet, and
  - A modem connection to the PG/PC
- Sending e-mails:
  With the AS_MAIL function block, you can send e-mails from a SIMATIC CPU via the TS Adapter IE Basic. To do this, the TS Adapter IE Basic establishes an outgoing modem connection to a dial-up server, such as an Internet Service Provider (ISP), and sends the e-mails via a mail server accessible there.

To establish a remote connection through the telephone network you will alternatively need:

- TIA Portal V11.0 (contains all the necessary TeleService functions)
- TeleService V6.1 or
- Windows dial-up network

© Siemens AG 2014

TS Adapter IE Advanced

Functionality:

- Remote maintenance via a VPN connection
- Parameterization via an integrated web interface
- Enabling and disabling of connections, time-triggered if required
- User management with freely-definable password rules
- Logging of security events, exportable
- Own hardware clock, battery back-up, NTP client
- Configurable package filter
- Port forwarding routing
- NAT, SNMP
- Sending e-mails (via FBs on a SIMATIC CPU)
- Export and import of parameters
- Firmware update

Security:

The TS Adapter IE Advanced provides a high level of security, supported by hardware. System access is only possible via an encrypted VPN connection. Authentification is ensured by certificates.
The user management function enables user accounts with differing access rights to be set up. The firewall can be configured to filter data streams so they exactly fit customer requirements.

Advantages/customer benefits:

- High security standard due to VPN, certificates, hardware-generated random numbers and adherence to strict Siemens security guidelines
- Made-to-measure solutions for remote maintenance in the automation environment
- Transparent routing via web proxies ensures use directly from the company LAN (service side) to the system, with no release or configuration by IT administrators
- Only the TIA Portal is required to build up the VPN connection (VPN client)
  - SSTP (Windows 7 service) behaves like HTTPS access from the browser and is thus transparent in the infrastructure
  - Direct online connection from the TIA Portal at the press of a button (telephone book function: management of multiple teleservice adapters possible)
- Can be used as router or following a default router
- Integrated DCP proxy (support for life-list function as local, and use of topology editor via remote access)

Sending e-mails

The TS Adapter IE Advanced (gateway function) can be used to send e-mails from a SIMATIC-CPU in the system network (LAN) to a communication partner in the public grid (WAN).
The following blocks are available depending on the CPU used:

- TMAIL_C for S7-1500
- TM_MAIL for S7-1200 (for firmware versions V2.x and V3.x of a CPU from the S7-1200 series)
- AS_MAIL for S7-300/400

Technical specifications

TS Adapter II	
Dimensions (W x H x D) in mm	125 x 110 x 40
Weight, approx.	250 g
Interfaces	
• to S7/C7	RS 485 (up to 12 Mbit/s)
• to the PC	USB 1.1 (12 Mbit/s)
• to an external modem	RS 232 (up to 115 kbaud)
• to the analog telephone network	RJ12
• to the ISDN telephone network	RJ45
Supply voltage, external or via MPI interface	24 V DC
Current consumption	60 mA (typ.) / 120 mA (max.)
Switch-on current, max.	0.7 A; 8 µs
Degree of protection	IP20
Temperature	
• Operation	± 0 °C to +60 °C
• Storage/transport	-40 °C to +70 °C

TS Adapter IE	
Dimensions (W x H x D) in mm	125 x 110 x 40
Weight, approx.	approx. 370 g
Interfaces	
• Ethernet	RJ45 (10/100 Mbit/s)
• to an external modem	RS 232 (up to 115 kbaud)
• to the analog telephone network	RJ12
• to the ISDN telephone network	RJ45
Supply voltage, external or via MPI interface	24 V DC
Current consumption of the TSA-IE ISDN	typ. 170 mA / max. 230 mA
Current consumption of the modem TSA IE	typ. 180 mA / max. 240 mA
Switch-on current, max.	0.7 A; 8 µs
Degree of protection	IP20
Temperature	
• Operation	± 0 °C to +60 °C
• Storage/transport	-40 °C to +70 °C

© Siemens AG 2014

Technical specifications (continued)

TS Adapter IE Basic (basic unit)	
Dimensions (W x H x D) in mm	30 x 100 x 75
Weight, approx.	100 g
Interfaces	
• Ethernet	RJ45 (10/100 Mbit/s)
• To the TS module	Proprietary (can only be used for TS modules)
Supply voltage, external	24 V DC
Current consumption	
• With TS module modem	Typ. 50 mA, max. 80 mA
• with TS module ISDN	Typ. 50 mA, max. 80 mA
• with TS module RS232	Typ. 40 mA, max. 60 mA
• with TS module GSM	Typ. 100 mA, max. 180 mA
Switch-on current, max.	240 mA
Degree of protection	IP20
Temperature	
• Operation	±0 °C to +60 °C (horizontal installation) ±0 °C to +40 °C (vertical installation)
• Storage	40 °C to +70 °C

TS module modem	
Dimensions (W x H x D) in mm, approximately	30 x 100 x 75
Weight, approx.	98 g
ITU transmission standards	• V.21, V.22, V.22bis, V.23, V.32, V.32bis, V.34, V.34x, K56flex, V.90, V.92
Other features	• Error correction and data compression • a/b interface • Hayes (AT) command set • All data formats • Dial procedures: dual-tone multiple-frequency (DTMF), pulse dialing

TS module ISDN	
Dimensions (W x H x D) in mm	30 x 100 x 75
Weight, approx.	92 g
Reports	
• D channel protocols	DSS1 (Euro-ISDN), 1TR6
• B channel protocols	V.110 (9 600 bit/s, 19 200 bit/s, 38 400 bit/s) V.120 (64 Kbit/s) X.75 (64 Kbit/s)
Other features	• Multiple subscriber number (MSN) • AT command interpreter

TS module RS232	
Dimensions (W x H x D) in mm	30 x 100 x 75
Weight, approx.	100 g
Operating mode	Full duplex, asynchronous
Signals	TXD, RXD, DSR, CTS, RTS, DTR, DCD
Data transmission rate	2 400 ... 115 200 bit/s
Message frame	8 data bits (LSB first), no parity bit, 1 stop bit
Rule	according to RS232 standard
Connector	D-sub 9-pin, male (PC COMx)

TS module GSM	
Dimensions (W x H x D) in mm	30 x 100 x 75
Weight, approx.	118 g
Transmission rate	
• GPRS Multislot Class 10	
- Up to 2 uplinks	13.4 Kbit/s … 27 Kbit/s upload gross
- Up to 4 downlinks	40 Kbit/s … 54 Kbit/s download gross
Interfaces	
• SIM interface	3 V/1.8 V
• Antenna connection	1 x SMA antenna socket (50 Ohm)
Frequency ranges	Quad band: 850, 900, 1 800, 1 900 MHz
Transmitted output power	2 W at 850 MHz, 900 MHz 1 W at 1 800 MHz, 1 900 MHz

TS Adapter IE Advanced	
General information	
Engineering with	
STEP 7 TIA Portal can be configured/ integrated as of version	V12 SP1
Installation	
Rail mounting possible	Yes
Wall/direct mounting possible	Yes
Supply voltage	
24 V DC	Yes
Permissible range	+19.2 V ... +28.8 V
Input current	
Current consumption, typ.	100 mA
Current consumption, max.	200 mA; incl. TS module GSM
Switch-on current, max.	4.3 A
Activation time, max.	3.1 ms
Power loss	
Power loss, typ.	2.4 W
Interfaces	
Industrial Ethernet	
Industrial Ethernet interface	3x Ethernet (RJ45), 100 Mbit
Interrupts/diagnostics/ status information	
Diagnostics display LED	RUN LED, ERROR LED, MAINT LED, LINK LED, ONLINE LED, VPN LED, RX/TX LED
Insulation	
Insulation tested at	707 V DC (type test)
Dimensions	
W x H x D	55 x 117 x 75 mm
Weight	
Weight, approx.	225 g

© Siemens AG 2014

Ordering data

	Article No.
TeleService, Version 6.1 *Task:* Remote maintenance by means of wired or radio network *Target system:* SIMATIC S7-200, SIMATIC S7-300, SIMATIC S7-400, SIMATIC C7 *Requirement:* TS Adapter (STEP 7 not required) *Delivery package:* on CD, German, English, French, Spanish, Italian; with electronic documentation	
Floating License	**6ES7842-0CE00-0YE0**
Floating License Upgrade (from each previous version)	**6ES7842-0CE00-0YE4**
Software Update Service (requires current software version) [1]	**6ES7842-0CA01-0YX2**
TS Adapter II modem with MPI connection and RS 232; 9-pin, male	**6ES7972-0CB35-0XA0**
TS Adapter II ISDN with MPI connection and RS 232; 9-pin, male	**6ES7972-0CC35-0XA0**
TS Adapter IE modem with Ethernet connection RJ45 (10/100 Mbit/s) and RS 232; 9-pin, male	**6ES7972-0EM00-0XA0**
TS Adapter IE ISDN with Ethernet connection RJ45 (10/100 Mbit/s) and RS 232; 9-pin, male	**6ES7972-0ED00-0XA0**
USB cable for parameterizing the TS Adapter II, it can also be used for programming the connected devices. 5 m long	**6ES7901-0AE00-0XA0**

[1] For more information on the software update service, see Catalog ST 70.

	Article No.
TS Adapter IE Basic Basic unit	**6ES7972-0EB00-0XA0**
TS module modem	**6ES7972-0MM00-0XA0**
TS module ISDN	**6ES7972-0MD00-0XA0**
TS module RS 232	**6ES7972-0MS00-0XA0**
TS module GSM	**6GK7972-0MG00-0XA0**
TS Adapter IE Advanced for accessing automation components via the Internet (GSM, DLS, WAN)	**6ES7972-0EA00-0XA0**
S7 mounting rail adapter for mounting the TS Adapter IE Basic on S7-300 mounting rail, width 60 mm	**6ES7972-0SE00-7AA0**
SIMATIC Manual Collection Electronic manuals on DVD, multilingual: LOGO!, SIMADYN, SIMATIC bus components, SIMATIC C7, SIMATIC distributed I/O, SIMATIC HMI, SIMATIC Sensors, SIMATIC NET, SIMATIC PC Based Automation, SIMATIC PCS 7, SIMATIC PG/PC, SIMATIC S7, SIMATIC Software, SIMATIC TDC	**6ES7998-8XC01-8YE0**
SIMATIC Manual Collection update service for 1 year Current "Manual Collection" DVD and the three subsequent updates	**6ES7998-8XC01-8YE2**

© Siemens AG 2014

Overview

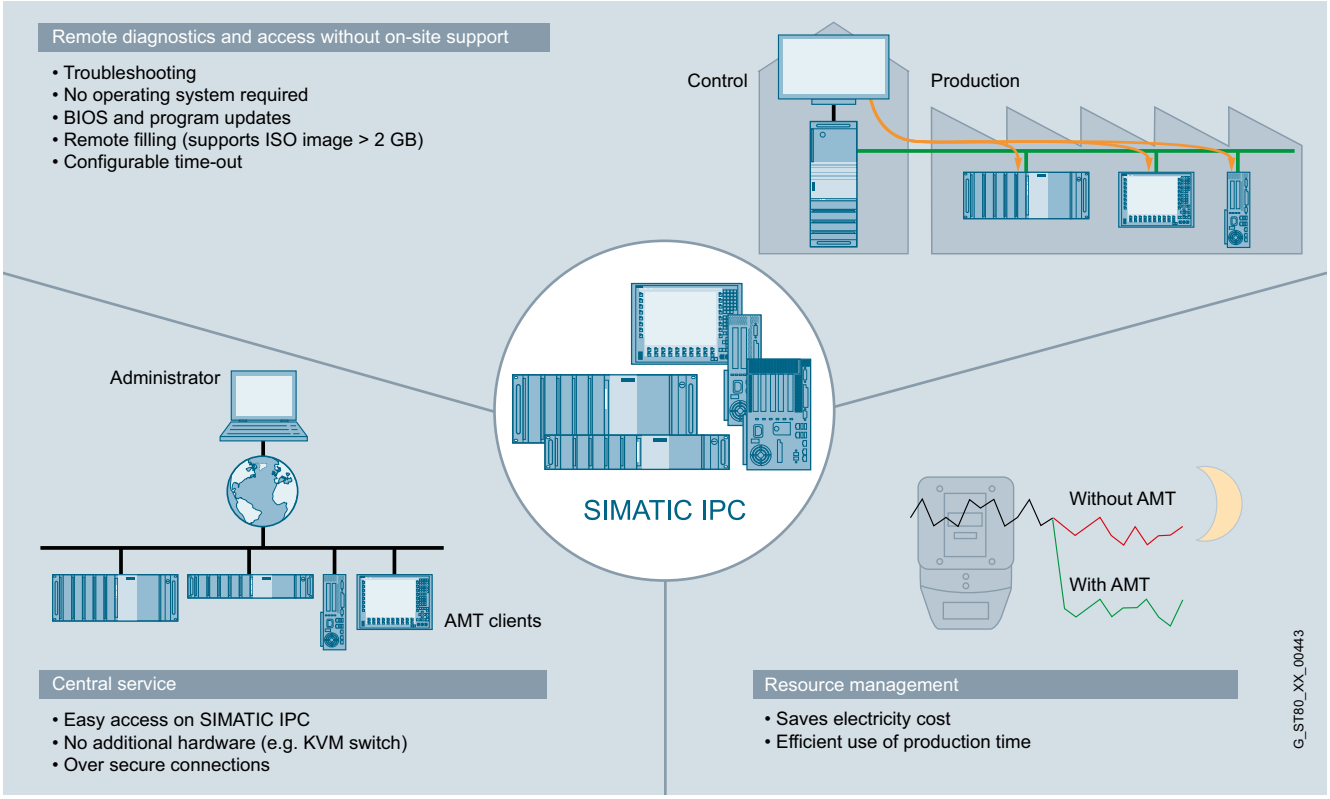

SIMATIC IPC Remote Manager

Efficient remote maintenance and management of SIMATIC IPCs.

With the SIMATIC IPC Remote Manager you can use functions of the Intel active management technology (Intel AMT) for SIMATIC IPCs. Intel AMT is used for remote management of PCs.

Intel AMT offers a range of functions, such as:

- Remote reboot
- IDE redirection
- Keyboard video mouse redirection
- Power on / off / reset, and
- An integrated Web server.

http://support.automation.siemens.com/WW/view/en/56230140

© Siemens AG 2014

Benefits

Central service

- Simple remote access to AMT clients
- Without additional hardware
- Via secure connections

Remote diagnostics and access without on-site presence

- Troubleshooting
- BIOS and program updates

Resource management

- Saving of electricity costs
- Efficient use of production time

Function

SIMATIC IPC Remote Management

Keyboard Video Mouse Redirection (KVM)

This can be used to divert the keyboard video mouse signal of a remote computer to or from an IT computer via a remote connection so that an administrator can access and operate the computer without additional hardware.

Remote Power Control

This allows SIMATIC IPCs with Intel AMT functions to be switched off and on via remote access, e.g. for maintenance purposes. If the operating system of the AMT computer is no longer operable, you can thus still perform a reset or restart. With this function, even the electricity costs of a company can be reduced e.g. by specifically shutting down computers left running by employees at night or at the weekend

Disk Redirection (IDE-R)

The AMT client can read data from an ISO image existing on the admin computer and start programs, e.g. to carry out BIOS and software updates.

Remote reboot

This can be used to reboot the PC by remote access from the hard disk, CD or a network drive, e.g. following a program update.

Web server

In addition, the Web server integrated in the AMT computer can be accessed using a Web browser (e.g. Internet Explorer). Here you can scan hardware and system information, and actions such as power on / off / reset can be performed.

System requirements

Hardware requirements for SIMATIC IPC Remote Manager:

- All SIMATIC PCs of the "B" generation
- All SIMATIC IPCs of the "C" generation
- SIMATIC Field PG M2 / M3 / M4

Operating system requirements for SIMATIC IPC Remote Manager:

- Microsoft Windows XP Professional SP3
- Microsoft Windows Vista Ultimate SP2
- Microsoft Windows Embedded Standard 2009
- Microsoft Windows Embedded Standard 2007
- Microsoft Windows 7 Ultimate
- Microsoft Windows 2003 R2 Server Edition
- Microsoft Windows 2008 Server Edition

Operating instructions / restrictions:

SIMATIC	Device	AMT client	Admin computer
Rack PC	IPC647C	Processors: Intel Core i5 or Core i7BIOS version: V15.01.05 and later	• With any operating system and Web browser • With Windows operating systems and SIMATIC IPC Remote Manager
	IPC847C		
	IPC547C	No	
Box PC	IPC627C	Processors: Core i7BIOS version: V15.02.05 and later	
	IPC827C		
Panel PC	HMI IPC677C	Processors: Core i7BIOS version: V15.02.05 and later	
	HMI IPC577C	No	
	HMI IPC477C	No	
Microbox PC	IPC427C	No	
Field PG	Field PG M2/M3	No	

- The SIMATIC IPC Remote Manager is offered exclusively with English menus.
- AMT functions are only integrated in the Intel Core i5 and Core i7 processors of the SIMATIC IPC847C, IPC627C, IPC647C, IPC827C and HMI IPC677C devices. With a Core i3 CPU, iAMT is not possible. A Field PG does not have integral AMT functionality either.

Ordering data

	Article No.
SIMATIC IPC Remote Manager V1.2 Software tool for remote maintenance and management of SIMATIC IPC, incl. manual on CD-ROM (English, German), single license	**6ES7648-6EA01-2YA0**

© Siemens AG 2014

Overview

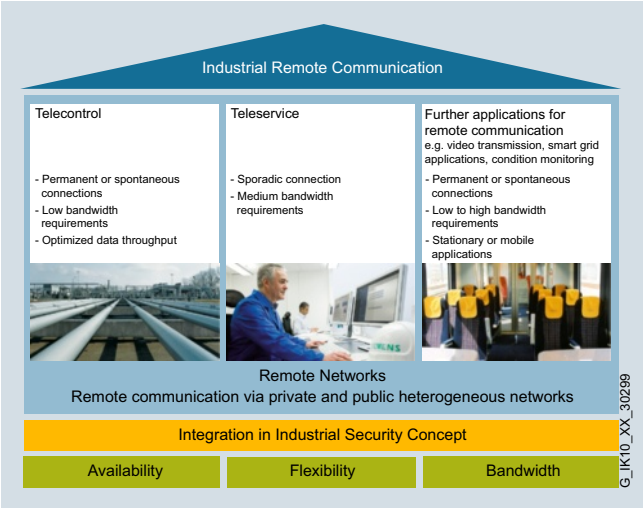

Connected in many ways via remote networks

Remote networks are public or private communication infrastructures for covering wide areas or long distances, for example mobile radio or fixed telephone networks. The extensive Siemens remote networks portfolio offers connection to both conventional and IP-based infrastructures.

Remote communication via private and public networks continually results in new opportunities in the public and industrial communication environment due to increasing bandwidths, higher availability and decreasing costs.

The new product spectrum of SCALANCE M provides the right network component for every application. SCALANCE M can be used universally in the fields of telecontrol, teleservice and any other application for industrial remote communication. The connection to remote networks is made via public communications infrastructures such as DSL and mobile radio. The components are optimized for industrial use and integrated into the TIA environment. Thanks to the integrated encryption and access protection mechanisms, the devices make a crucial contribution to security in data communication. Groundbreaking security concepts (firewall, VPN) for the use of public and, in some cases, open infrastructures, such as the internet, protect the communication systems against unauthorized access from outside.
In order to achieve a high level of process availability, the transmission networks can be redundantly structured.

Even for private leased lines or dialup networks, Siemens offers the right solution!

In order to achieve extensive networks, the connection via remote networks can be supplemented with further network components from the SIMATIC NET product portfolio – for example, with the fiber optic cable versions of the SCALANCE X industrial Ethernet switches or the SCALANCE W industrial wireless LAN components.

Security is the most important thing when constructing remote networks. Together with Security Integrated components, such as SCALANCE S, the remote access to IP-based networks can be protected with firewalls and VPN tunnels and saved from any risks.

© Siemens AG 2014

SCALANCE M874 mobile wireless router

Overview

The SCALANCE M874-3 is a mobile wireless router for cost-effectively and securely connecting Ethernet-based subnets and programmable controllers via the 3rd generation mobile wireless network (UMTS) and it supports HSPA+ (High Speed Packet Access). Thus, it allows high transfer rates of up to 14.4 Mbit/s in the downlink and up to 5.76 Mbit/s in the uplink (depending on the infrastructure of the mobile wireless provider).

The SCALANCE M874-2 is a mobile wireless router for cost-effectively and securely connecting Ethernet-based subnets and programmable controllers via the 2nd generation mobile wireless network (GSM) and it supports GPRS (General Packet Radio Service) and EDGE (Enhanced Data Rates for GSM Evolution).

The security of access and communication is ensured by the security functions of the integrated firewall and by VPN tunnels (end-to-end connection encryption through IPsec tunneling).

Product versions

SCALANCE M874-3:

- Penta-band UMTS with the frequency bands 800/850/1 700/1 900/2 100 MHz
- Quad-band GSM with the frequency bands 850/900/1 800/1 900 MHz
- Without UMTS network, automatic switchover to 2nd generation mobile radio data services, eGPRS or GPRS mode
- Support for UMTS with HSPA+ (downlink: 14.4 Mbit/s, uplink: 5.76 Mbit/s)

SCALANCE M874-2:

- Quad-band GSM with the frequency bands 850/900/1 800/1 900 MHz

Benefits

get Designed for Industry

- High security standards by means of a firewall (stateful packet inspection) and VPN connections (IP-Sec) as an integral component of the Industrial Security concept
- Low investment and operating costs for operator control and monitoring of remotely connected substations
- Reduction in traveling costs and personnel costs due to remote programming and diagnostics via mobile wireless networks
- Improved manageability thanks to mechanical integration due to the design (module format) with S7-1500 / ET200MP
- Wide application area thanks to large bandwidth, high performance and speed
- Application-dependent use of mobile wireless services (2nd and 3rd generation)
- Worldwide application

Application

The SCALANCE M874 can be used in industrial and semi-industrial applications:

- Worldwide remote programming and servicing, e.g. using STEP 7 via mobile wireless
- Worldwide flexible plant access for servicing and diagnostics purposes
- Connection of static and mobile stations for controlling and monitoring such things as:
  - Water/wastewater treatment plants
  - Oil and gas supplies
  - District heating networks
  - Power distribution
  - Pumping stations
  - Transportation systems
- Worldwide condition monitoring, e.g. for
  - Wind energy and photovoltaic plants
- Can be used worldwide due to:
  - UMTS: Penta-band technology
  - GSM: Quad-band technology

Note:

Country-specific approvals must be observed.

Due to the integral security functions, the SCALANCE M874 mobile wireless router enables protected connection of distributed automation cells to a control center via the mobile wireless network, and it can be used within the scope of the Siemens Remote Service. This comprehensive service allows companies to task Siemens with the monitoring, control and maintenance of distant plants and machines via remote access.

© Siemens AG 2014

Design

- The rugged plastic enclosure supports the following mounting methods:
  - S7-1500 mounting rail
  - S7-300 mounting rail
- Standard rail mounting
- Wall mounting
- 2 x RJ45 interface with 10/100 Mbit/s for Industrial Ethernet
- Diagnostics LEDs for modem status, field strength, connection control, and DI/DO channels
- SET button
- 5-pin screw terminal for redundant connection to the 24 V DC power supply
- 2-pin screw terminal for a digital input
- 2-pin screw terminal for a digital output
- 1 x SMA antenna connection for an UMTS/GSM antenna

Function

- Automatic setup and holding of IP-based online connection to the Internet
- Merging of distributed, IP-based networks via mobile radio networks
- Bi-directional IP-based data communication with a telecontrol center, e.g. ST7cc or ST7sc, WinCC or PCS 7
- Integrated security functions with firewall (stateful inspection)
- Integrated IPsec VPN tunnel encryption
- Data exchange between telecontrol stations (slave-slave communication) via a TIM communication module in the service center
- Secure data communication with the SINAUT ST7 stations, also over mobile radio provider networks which do not provide public and fixed IP addresses for the modem
- Automatic and user-defined sending of text messages
- Configuration data can be saved by means of the C-PLUG storage medium (not included in the scope of delivery)

Configuration

- User-friendly configuration of all network and firewall parameters of the router using the Web browser
  - CLI (Command Line Interface) available soon
  - Integration in TIA Portal available soon

Security

- Router for data transmission via public networks with NAT functionality (NAT Traversal, NAPT, 1:1-NAT)
- Standardized VPN termination of the control center via SCALANCE S
  - By means of IPsec protocol
  - OpenVPN available soon
- Firewall for protection against unauthorized access; the dynamic packet filter checks data packets based on the source and target address (stateful inspection)

Diagnostics / maintenance

- Connection buildup status and status of an existing connection via front LED display

Preconditions for using the SCALANCE M874 mobile radio router

- SIM card from a mobile network operator with UMTS support or alternatively, a SIM card from a mobile wireless operator with GSM support

© Siemens AG 2014

Integration

Application example:
SCALANCE M874 for remote maintenance with VPN tunnel

Classical applications such as remote programming, parameterization and diagnosis, but also monitoring of machines and plants installed worldwide can be performed securely via a VPN from a service center that is connected over the Internet. Access to any IP-based devices, especially IP-based programmable controllers, which are downstream of the SCALANCE M874 in the local network.

Multimedia applications like video streaming can be implemented thanks to the increased bandwidth in the uplink.

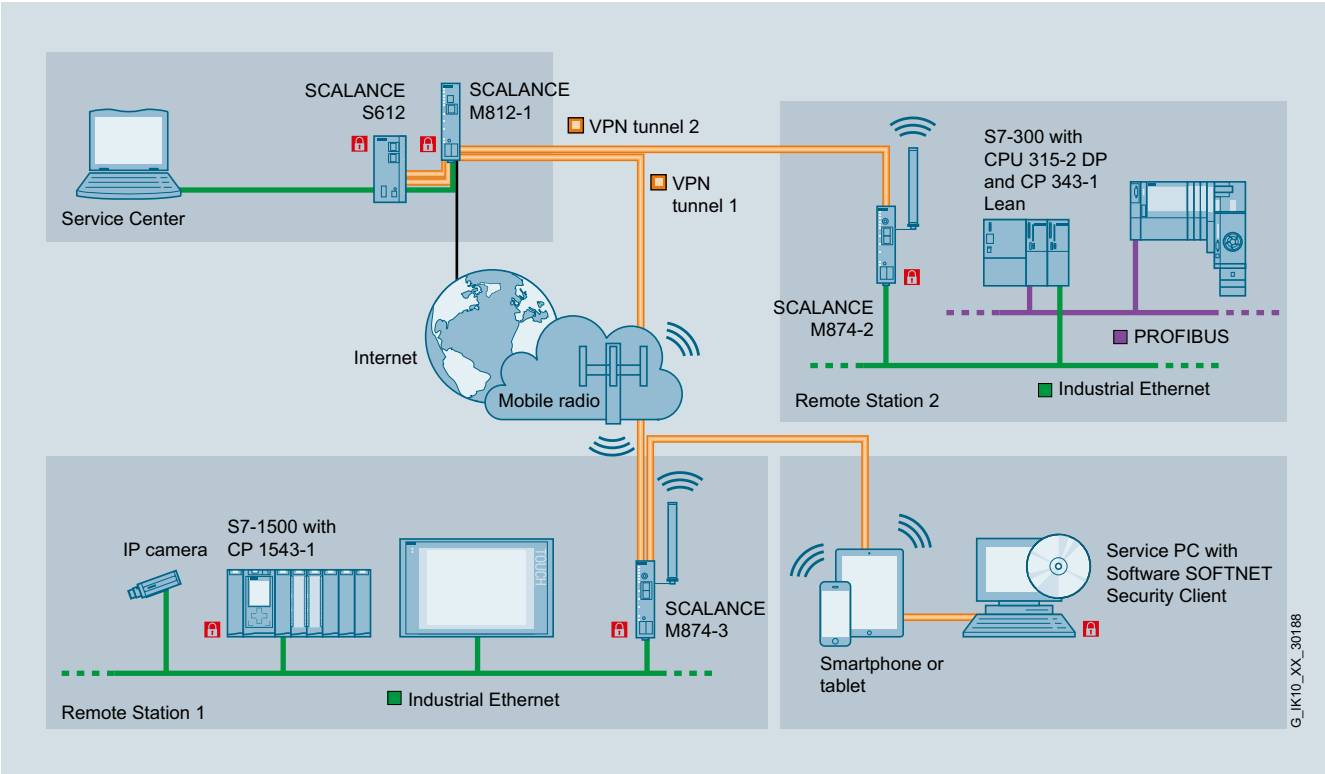

Typical remote access scenario via a secure UMTS-based Internet connection

© Siemens AG 2014

Integration (continued)

Application example: SINAUT ST7 with SCALANCE M874

The diagram below shows an S7-300 station with TIM 3V-IE and SCALANCE M874-2 connected to the control center (SINAUT ST7cc or ST7sc) via UMTS and Internet. Behind the SCALANCE S module, a TIM 4R-IE is installed. For the control center, this module performs the SINAUT communication with the stations connected via the Internet as well as with the stations that are connected to the TIM 4R-IE via two other networks. Cross traffic between individual stations in the various networks is routed via the TIM 4R-IE.

It is possible to forward fault messages from the plant to service personnel by text message, fax or e-mail.

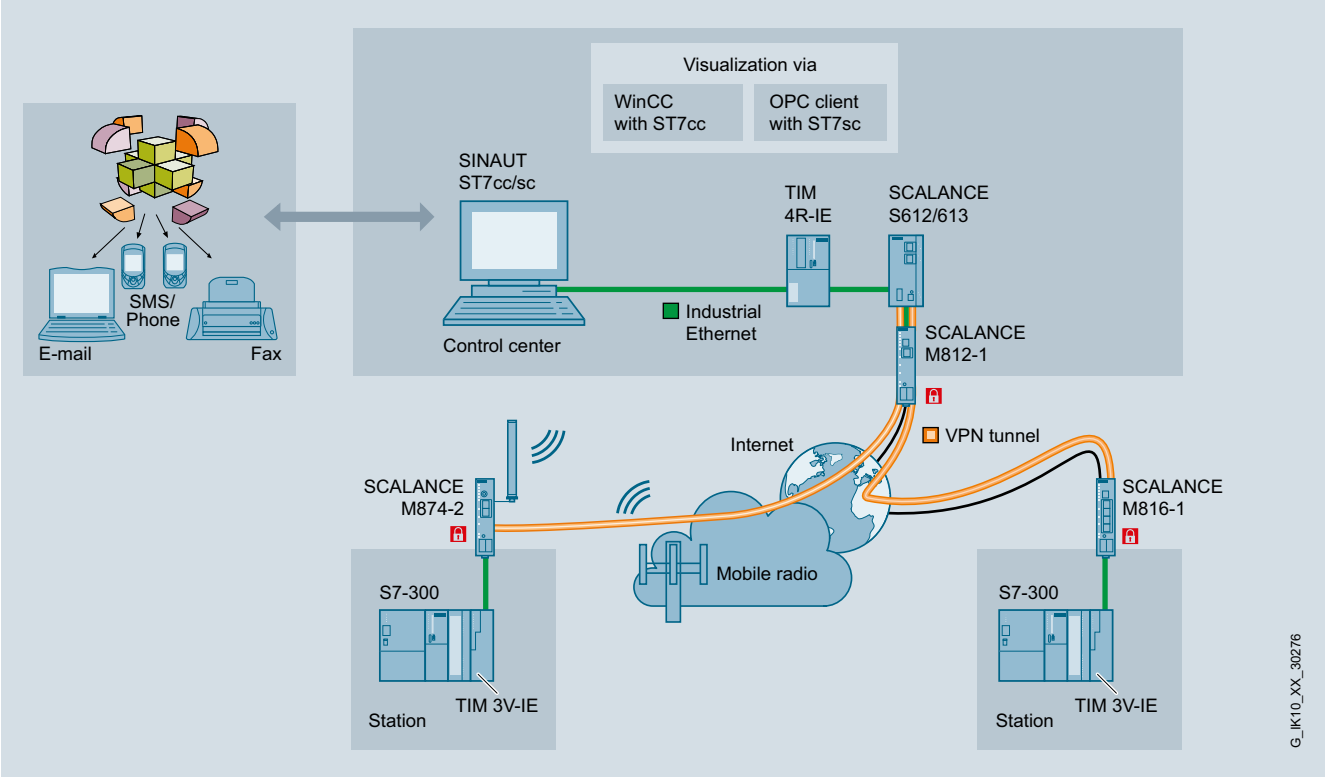

Secure telecontrol with SINAUT ST7 over IP-based networks

© Siemens AG 2014

Integration (continued)

Secure VPN communication with SIMATIC NET components

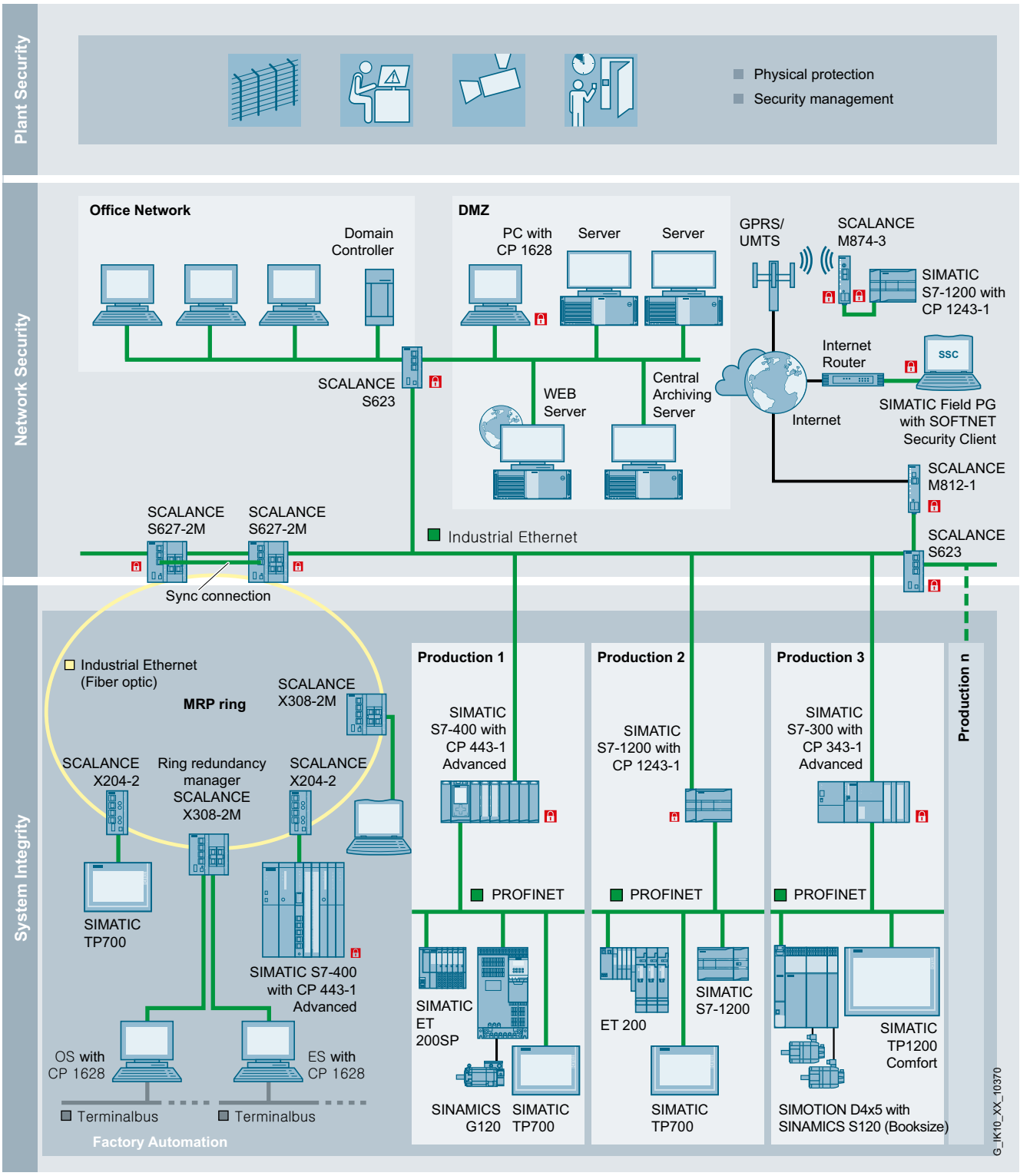

Secure VPN communication using Security Integrated components

© Siemens AG 2014

Technical specifications

Article No.	**6GK5874-2AA00-2AA2**	**6GK5874-3AA00-2AA2**
Product-type designation	**SCALANCE M874-2 2.5G**	**SCALANCE M874-3 3G**
Transfer rate		
• 1 for Industrial Ethernet	10 Mbit/s	10 Mbit/s
• 2 for Industrial Ethernet	100 Mbit/s	100 Mbit/s
• for GSM transmission	-	-
• with GPRS transmission		
- with downlink maximum	85.6 kbit/s	85.6 kbit/s
- with uplink maximum	85.6 kbit/s	85.6 kbit/s
• with eGPRS transmission		
- with downlink maximum	236.8 kbit/s	236.8 kbit/s
- with uplink maximum	236.8 kbit/s	236.8 kbit/s
• with UMTS transmission		
- with downlink maximum	-	14.4 Mbit/s
- with uplink maximum	-	5.76 Mbit/s
Interfaces		
Number of electrical connections		
• for internal network	2	2
• for external network	1	1
• for power supply	2	2
Design of the electrical connection		
• for internal network	RJ45 port (10/100 Mbit/s, TP, autocrossover)	RJ45 port (10/100 Mbit/s, TP, autocrossover)
• for external network	SMA antenna socket (50 ohms)	SMA antenna socket (50 ohms)
• for power supply	Terminal strip	Terminal strip
Signal-Inputs/outputs		
Number of electrical connections		
• for digital input signals	1	1
• for digital output signals	1	1
Design of electrical connection		
• for digital input signals	Terminal block	Terminal block
• for digital output signals	Terminal block	Terminal block
WAN connection		
Type of mobile wireless network is supported GSM	Yes	Yes
Type of mobile wireless service is supported		
• GPRS	Yes	Yes
• eGPRS	Yes	Yes
Type of mobile wireless network is supported UMTS	No	Yes
Type of mobile service is supported HSPA+	-	Yes
Operating frequency for GSM transmission		
• 850 MHz	Yes	Yes
• 900 MHz	Yes	Yes
• 1800 MHz	Yes	Yes
• 1900 MHz	Yes	Yes
Operating frequency for UMTS transmission		
• 800 MHz	-	Yes
• 850 MHz	-	Yes
• 900 MHz	-	No
• 1700 MHz	-	Yes
• 1900 MHz	-	Yes
• 2100 MHz	-	Yes
Supply voltage, current consumption, power loss		
Type of supply voltage	DC	DC
Supply voltage	24 V	24 V
Supply voltage		
• minimum	10.8 V	10.8 V
• maximum	28.8 V	28.8 V

© Siemens AG 2014

Technical specifications (continued)

Article No.	6GK5874-2AA00-2AA2	6GK5874-3AA00-2AA2
Product-type designation	**SCALANCE M874-2 2.5G**	**SCALANCE M874-3 3G**
Permitted ambient conditions		
Ambient temperature		
• during operating	-20 … +60 °C	-20 … +60 °C
• during storage	-40 … +85 °C	-40 … +85 °C
Relative humidity at 25 °C during operating maximum	95 %	95 %
Protection class IP	IP20	IP20
Design, dimensions and weight		
Design	compact	compact
Depth	127 mm	127 mm
Height	147 mm	147 mm
Width	35 mm	35 mm
Mounting type		
• 35 mm DIN rail mounting	Yes	Yes
• S7-300 rail mounting	Yes	Yes
• S7-1500 rail mounting	Yes	Yes
Product properties, functions, components general		
Product function		
• DynDNS client	Yes	Yes
• no-ip.com client	Yes	Yes
Product functions management, configuration		
Product function		
• CLI	No	No
• web-based management	Yes	Yes
• MIB support	Yes	Yes
• TRAPs via email	Yes	Yes
Protocol is supported		
• Telnet	No	No
• HTTP	Yes	Yes
• HTTPS	Yes	Yes
Type of configuration	Web-based management	Web-based management
Product functions Diagnosis		
Product function		
• Statistics Packet Size	No	No
• Statistics packet type	No	No
• Error statistics	No	No
• SysLog	Yes	Yes
• Packet Filter Log	Yes	Yes
Product functions DHCP		
Product function		
• DHCP client	Yes	Yes
• DHCP server - internal network	Yes	Yes
Product functions Routing		
Router function		
• NAT (IP masquerading)	Yes	Yes
• Port Forwarding	Yes	Yes
• NAT traversal	Yes	Yes
• 1:1 NAT	Yes	Yes
• DNS cache	Yes	Yes

© Siemens AG 2014

Technical specifications (continued)

Article No.	6GK5874-2AA00-2AA2	6GK5874-3AA00-2AA2
Product-type designation	**SCALANCE M874-2 2.5G**	**SCALANCE M874-3 3G**
Product functions Security		
Design of the firewall	Stateful inspection	Stateful inspection
Product function		
• Password protection	Yes	Yes
• packet filter	Yes	Yes
• Broadcast/Multicast/Unicast Limiter	No	No
• broadcast blocking	No	No
Suitability for installation Virtual Private Network	Yes	Yes
Product function with VPN connection	-	-
Number of possible connections for VPN connection	20	20
Type of authentication with Virtual Private Network PSK	Yes	Yes
Protocol is supported IPsec tunnel and transport mode	Yes	Yes
Key length		
• with IPsec DES with Virtual Private Network	56 bit	56 bit
• 1 with IPsec AES with Virtual Private Network	128 bit	128 bit
• 2 with IPsec AES with Virtual Private Network	192 bit	192 bit
• 3 with IPsec AES with Virtual Private Network	256 bit	256 bit
Type of Internet key exchange with Virtual Private Network main mode	Yes	Yes
Key length with IPsec 3DES with Virtual Private Network	168 bit	168 bit
Type of Internet key exchange with Virtual Private Network quick mode	Yes	Yes
Type of packet authentication with Virtual Private Network	MD5, SHA-1	MD5, SHA-1
IETF profile with Virtual Private Network X.509v3 certificate	Yes	Yes
Product functions Time		
Protocol is supported		
• NTP	Yes	Yes
• SNTP	Yes	Yes
Standards, specifications, approvals		
Verification of suitability	-	-
• CE mark	Yes	Yes
• Railway application in accordance with EN 50155	No	No

© Siemens AG 2014

Ordering data

	Article No.
SCALANCE M874 mobile wireless router	
Mobile wireless router for wireless IP communication from Industrial Ethernet-based subnets and programmable controllers via UMTS or GSM mobile networks; with integrated firewall and VPN with IPsec; 2 x RJ45 ports, 1 x antenna connection	
• **SCALANCE M874-3** [1]	**6GK5874-3AA00-2AA2**
• **SCALANCE M874-2** [1]	**6GK5874-2AA00-2AA2**
Accessories	
IE FC RJ45 Plug 180	
RJ45 plug connector for Industrial Ethernet with a rugged metal enclosure and integrated insulation displacement contacts for connecting Industrial Ethernet FC installation cables; with 180° cable outlet; for network components and CPs/CPUs with Industrial Ethernet interface	
• 1 pack = 1 unit	**6GK1901-1BB10-2AA0**
• 1 pack = 10 units	**6GK1901-1BB10-2AB0**
• 1 pack = 50 units	**6GK1901-1BB10-2AE0**
ANT794-4MR antenna	**6NH9860-1AA00**
Omnidirectional antenna for GSM (2G), UMTS (3G) and LTE (4G) networks; weather-resistant for indoor and outdoor use; 5 m cable with fixed connection to antenna; SMA connector; including mounting bracket, screws, wall plugs	
C-PLUG	**6GK1900-0AB00**
Swap medium for simple replacement of devices in the event of a fault; for storing configuration or application data; can be used for SIMATIC NET products with C-PLUG slot	
IE TP Cord RJ45/RJ45	
TP cable 4 x 2 with 2 RJ45 connectors	
• 0.5 m	**6XV1870-3QE50**
• 1 m	**6XV1870-3QH10**
• 2 m	**6XV1870-3QH20**
• 6 m	**6XV1870-3QH60**
• 10 m	**6XV1870-3QN10**

[1] Please note national approvals under http://www.siemens.com/mobilenetwork-approvals

Note:

Order data for further security products with firewall and VPN functionality can be found under Industrial Security

More information

You will find more information on the topic of Industrial Security on the Internet at:
www.siemens.com/industrialsecurity

© Siemens AG 2014

Overview

- Router for wireless IP communication between Industrial Ethernet-based programmable controllers via mobile radio networks of the 3rd generation (UMTS) and the 2nd generation (GSM)
- High data transfer rate thanks to HSDPA
- Integrated security functions with firewall
- Use as VPN end point (IPsec)

Benefits

get Designed for Industry

- Low investment and operating costs for operator control and monitoring of wirelessly connected telecontrol substations
- Reduced travel costs and telephone charges thanks to remote programming and remote diagnosis via UMTS
- High level of security thanks to an integrated firewall and VPN with IPsec
- Utilization of existing UMTS/GSM infrastructure of the mobile radio providers
- Worldwide application

Application

- Can be used in industrial and semi-industrial applications due to its design and electrical properties
- Remote programming and maintenance worldwide, e.g. with STEP 7 via the high-speed UMTS interface
- Linking of mobile stations, with central monitoring and control
- Energy-saving concepts in distributed systems, e.g. through status-dependent speed control of pumps in remote stations
- Control and monitoring of
  - Sewage treatment plants, water treatment
  - Oil and gas supplies
  - District heating networks
  - Power distribution
  - Pumping stations
  - Transportation systems
  - Buildings
  - Wind energy and photovoltaic plants
- Connection of telecontrol substations (e.g. SINAUT ST7) to control center via UMTS
- Video transmission e.g. from moving vehicles such as buses and trains
- Can be used worldwide due to:
  - UMTS: Penta-band technology
  - GSM: Quad-band technology

Note:

Country-specific approvals must be observed.

Due to the integral security functions, the SCALANCE M875 UMTS router enables protected connection of distributed automation cells to a control center via the mobile wireless network, and it can be used within the scope of the Siemens Remote Service. This comprehensive service allows companies to task Siemens with the monitoring, control and maintenance of distant plants and machines via remote access.

Design

- Rugged plastic enclosure for standard rail mounting
- 2 x RJ45 interface with 10/100 Mbit/s for Industrial Ethernet
- Diagnostic LEDs for modem status, field strength, connection control, and DI/DO channels
- SET service button
- 4-pin screw terminal for connection to the 24 V DC power supply
- 4-pin screw terminal for one digital input and one digital output
- 2 x SMA antenna connection for up to two UMTS/GSM antennas for improved reception bandwidth on mobile objects thanks to antenna diversity
- Type approval as vehicle component in accordance with Directive 72/245/EEC in Version 2009/19/EC
- Type approval for use on rolling stock in accordance with EN 50155

© Siemens AG 2014

Function

- Pentaband UMTS with the frequency bands 800/850/1 700/1 900/2 100 MHz
- Quad-band GSM with the frequency bands 850/900/1 800/1 900 MHz
- Support for UMTS with HSDPA+ (downlink: 14.4 Mbit/s, uplink: 5.76 Mbit/s)
- Without UMTS network, automatic switchover to 2nd generation mobile radio data services, eGPRS or GPRS mode
- Automatic setup and holding of IP-based online connection to the Internet
- Merging of distributed, IP-based networks via UMTS/GSM mobile radio networks
- Bi-directional IP-based data communication with the telecontrol center, e.g. ST7cc or ST7sc, WinCC or PCS 7
- Integrated security functions with firewall (stateful inspection)
- Integrated IPsec VPN tunnel encryption
- Data exchange between telecontrol stations (slave-slave communication) via a TIM communication module in the service center
- Secure data communication with the SINAUT ST7 stations, also over mobile radio provider networks which do not provide public and fixed IP addresses for the modem
- Automatic and user-defined sending of text messages

Configuration

- User-friendly configuration of all network and firewall parameters of the router using the web browser

Security

- Router for data transmission via public networks with NAT functionality (NAT Traversal, NAPT, 1:1-NAT)
- Suitable VPN termination of the control center via SCALANCE S
- Firewall for protection against unauthorized access; the dynamic packet filter checks data packets based on the source and target address (stateful inspection) and blocks undesirable data traffic (anti-spoofing)

Diagnostics / maintenance

- Status of connection buildup and of an existing connection via front LED display and web browser

Preconditions for using the SCALANCE M875 UMTS router

- SIM card from a UMTS network operator with HSDPA support, or alternatively a SIM card from a GSM network operator with eGPRS or GPRS support

© Siemens AG 2014

Integration

Application example: SCALANCE M875 for remote maintenance with VPN tunnel

Classical applications such as remote programming, parameterization and diagnosis, but also monitoring of machines and plants installed worldwide can be performed securely via a VPN from a service center that is connected over the Internet. Access to any IP-based devices, especially IP-based programmable controllers, which are downstream of the SCALANCE M875 in the local network.

Multimedia applications like video streaming can be implemented thanks to the increased bandwidth in the uplink.

Application example, broadband data transmission in vehicles with SCALANCE M875

The UMTS router SCALANCE M875, with its high down-link and uplink capacity, supports numerous data services with large bandwidth requirements via mobile wireless to and from vehicles. To increase the connection quality during motion, SCALANCE M875 is equipped with antenna diversity. Sensitive data can be transmitted in a secure VPN tunnel if required.

Video transmission in real time from the passenger cell is used to increase passenger safety (video surveillance). The video data from all vehicles is sent to a control center for monitoring and further processing.

In addition, applications such as data interfacing for ticket machines, infotainment services and internet on board, or proactive monitoring of vehicle engineering (telemetry) are also possible.

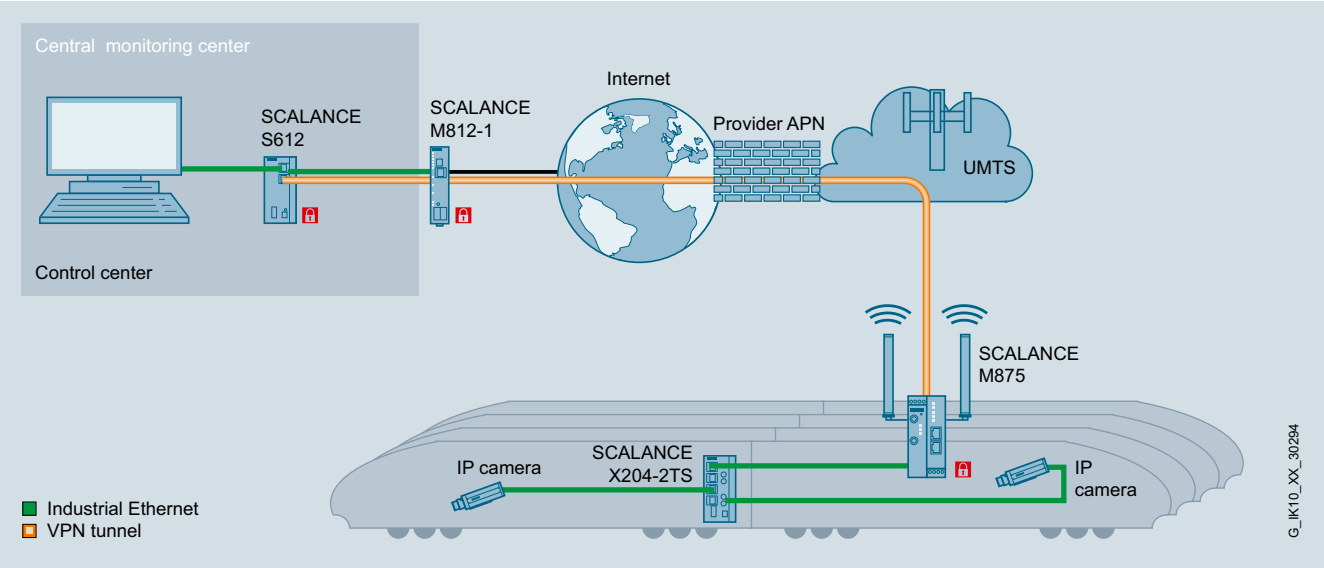

Broadband video data transmission over UMTS, protected via VPN, to increase passenger safety

© Siemens AG 2014

Technical specifications

Article No.	6GK5875-0AA10-1AA2	6GK5875-0AA10-1CA2
Product-type designation	**SCALANCE M875 UMTS ROUTER**	**SCALANCE M875 UMTS-ROUTER (J)**
Transmission rate		
Transmission rate		
• 1 for Industrial Ethernet	10 Mbit/s	10 Mbit/s
• 2 for Industrial Ethernet	100 Mbit/s	100 Mbit/s
• for GSM transmission	9 600 bit/s	9 600 bit/s
• with GPRS transmission		
- with downlink maximum	85.6 kbit/s	85.6 kbit/s
- with uplink maximum	42.8 kbit/s	42.8 kbit/s
• with eGPRS transmission		
- with downlink maximum	236.8 kbit/s	236.8 kbit/s
- with uplink maximum	118 kbit/s	118 kbit/s
• with UMTS transmission		
- with downlink maximum	14.4 Mbit/s	14.4 Mbit/s
- with uplink maximum	5.76 Mbit/s	5.76 Mbit/s
• for EV-DO transmission		
- downlink maximum	-	-
- uplink maximum	-	-
Interfaces		
Number of electrical connections		
• for internal network	2	2
• for external network	2	2
• for power supply	1	1
Design of the electrical connection		
• for internal network	RJ45 port (10/100 Mbit/s, TP, autocrossover)	RJ45 port (10/100 Mbit/s, TP, autocrossover)
• for external network	SMA antenna socket (50 ohms)	SMA antenna socket (50 ohms)
• for power supply	Terminal strip	Terminal strip
Signal-Inputs/outputs		
Number of electrical connections		
• for digital input signals	1	1
• for digital output signals	1	1
Design of electrical connection		
• for digital input signals	Terminal strip	Terminal strip
• for digital output signals	Terminal strip	Terminal strip
WAN connection		
Type of mobile wireless network is supported GSM	Yes	Yes
Type of mobile wireless service is supported		
• GPRS	Yes	Yes
• eGPRS	Yes	Yes
Type of mobile wireless network is supported UMTS	Yes	Yes
Type of mobile wireless service is supported		
• HSDPA	-	-
• HSUPA	-	-
• HSPA+	Yes	Yes
• CDMA	-	-
• EV-DO	-	-
Operating frequency		
• for GSM transmission		
- 850 MHz	Yes	Yes
- 900 MHz	Yes	Yes
- 1800 MHz	Yes	Yes
- 1900 MHz	Yes	Yes
• for UMTS transmission		
- 800 MHz	Yes	Yes
- 850 MHz	Yes	Yes
- 900 MHz	No	Yes
- 1700 MHz	Yes	No
- 1900 MHz	Yes	Yes
- 2100 MHz	Yes	Yes

© Siemens AG 2014

Technical specifications (continued)

Article No.	6GK5875-0AA10-1AA2	6GK5875-0AA10-1CA2
Product-type designation	**SCALANCE M875 UMTS ROUTER**	**SCALANCE M875 UMTS-ROUTER (J)**
Supply voltage, current consumption, power loss		
Type of supply voltage	DC	DC
Supply voltage		
• minimum	12 V	12 V
• maximum	30 V	30 V
Consumed current maximum	450 mA	450 mA
Active power loss typical	4 W	4 W
Permitted ambient conditions		
Ambient temperature		
• during operating	-40 … +75 °C	-40 … +75 °C
• during storage	-40 … +85 °C	-40 … +85 °C
Relative humidity at 25 °C during operating maximum	95 %	95 %
Protection class IP	IP20	IP20
Design, dimensions and weight		
Design	compact	compact
Depth	114 mm	114 mm
Height	99 mm	99 mm
Width	45 mm	45 mm
Net weight	280 g	280 g
Mounting type 35 mm DIN rail mounting	Yes	Yes
Product properties, functions, components general		
Product function		
• DynDNS client	Yes	Yes
• no-ip.com client	-	-
Product functions management, configuration		
Product function		
• CLI	No	No
• web-based management	Yes	Yes
• MIB support	No	No
• TRAPs via email	No	No
Protocol is supported		
• Telnet	No	No
• HTTP	No	No
• HTTPS	Yes	Yes
Type of configuration	Web-based management	Web-based management
Product functions Diagnosis		
Product function		
• Statistics Packet Size	No	No
• Statistics packet type	No	No
• Error statistics	No	No
• SysLog	Yes	Yes
• Packet Filter Log	Yes	Yes
Product functions DHCP		
Product function		
• DHCP client	Yes	Yes
• DHCP server - internal network	Yes	Yes
Product functions Routing		
Router function		
• NAT (IP masquerading)	Yes	Yes
• Port Forwarding	Yes	Yes
• NAT traversal	Yes	Yes
• 1:1 NAT	Yes	Yes
• DNS cache	Yes	Yes

© Siemens AG 2014

Technical specifications (continued)

Article No.	6GK5875-0AA10-1AA2	6GK5875-0AA10-1CA2
Product-type designation	**SCALANCE M875 UMTS ROUTER**	**SCALANCE M875 UMTS-ROUTER (J)**
Product functions Security		
Design of the firewall	Stateful inspection	Stateful inspection
Product function		
• Password protection	Yes	Yes
• packet filter	Yes	Yes
• Broadcast/Multicast/Unicast Limiter	No	No
• broadcast blocking	No	No
Suitability for installation Virtual Private Network	Yes	Yes
Product function with VPN connection	-	-
Number of possible connections for VPN connection	10	10
Number of network stations for internal network with VPN connection maximum	-	-
Type of authentication with Virtual Private Network PSK	Yes	Yes
Protocol is supported IPsec tunnel and transport mode	Yes	Yes
Key length		
• with IPsec DES with Virtual Private Network	56 bit	56 bit
• 1 with IPsec AES with Virtual Private Network	128 bit	128 bit
• 2 with IPsec AES with Virtual Private Network	192 bit	192 bit
• 3 with IPsec AES with Virtual Private Network	256 bit	256 bit
Type of Internet key exchange with Virtual Private Network main mode	Yes	Yes
Key length with IPsec 3DES with Virtual Private Network	168 bit	168 bit
Type of Internet key exchange with Virtual Private Network quick mode	Yes	Yes
Type of packet authentication with Virtual Private Network	MD5, SHA-1	MD5, SHA-1
IETF profile with Virtual Private Network X.509v3 certificate	Yes	Yes
Product functions Time		
Protocol is supported		
• NTP	Yes	Yes
• SNTP	-	-
Standards, specifications, approvals		
Standard		
• for EMC	-	-
• for EMC from FM	-	-
• for hazardous zone	-	-
• for safety of CSA and UL	Yes	-
• for hazardous area of CSA and UL	-	-
• for emitted interference	EN55022 Class A	EN55022 Class A
• for interference immunity	EN 61000-6-2	EN 61000-6-2
Verification of suitability	EN 61000-6-2	EN 61000-6-2
• CE mark	Yes	-
• C-Tick	-	-
• E1 approval	Yes	-
• e1 approval	Yes	-
• Railway application in accordance with EN 50155	Yes	-

© Siemens AG 2014

Ordering data

	Article No.
SCALANCE M875 mobile radio router	
Mobile radio router for wireless IP communication from Industrial Ethernet-based programmable controllers via UMTS/GSM mobile radio networks; EGPRS Multislot Class 12; with integrated firewall and VPN with IPsec; 2 x RJ45 ports, 2 x antenna connections	
• **SCALANCE M875** [1]	**6GK5875-0AA10-1AA2**
• **SCALANCE M875** [1] for Japan	**6GK5875-0AA10-1CA2**
Accessories	
IE FC RJ45 Plug 180	
RJ45 plug connector for Industrial Ethernet with a rugged metal enclosure and integrated insulation displacement contacts for connecting Industrial Ethernet FC installation cables; with 180° cable outlet; for network components and CPs/CPUs with Industrial Ethernet interface	
• 1 pack = 1 unit	**6GK1901-1BB10-2AA0**
• 1 pack = 10 units	**6GK1901-1BB10-2AB0**
• 1 pack = 50 units	**6GK1901-1BB10-2AE0**
ANT794-4MR antenna	**6NH9860-1AA00**
Omnidirectional antenna for GSM (2G), UMTS (3G) and LTE (4G) networks; weather-resistant for indoor and outdoor use; 5 m cable with fixed connection to antenna; SMA connector; including mounting bracket, screws, wall plugs	
IE TP Cord RJ45/RJ45	
TP cable 4 x 2 with 2 RJ45 connectors	
• 0.5 m	**6XV1870-3QE50**
• 1 m	**6XV1870-3QH10**
• 2 m	**6XV1870-3QH20**
• 6 m	**6XV1870-3QH60**
• 10 m	**6XV1870-3QN10**

[1] Please note national approvals under http://www.siemens.com/mobilenetwork-approvals

Note:

Order data for further security products with firewall and VPN functionality can be found under Industrial Security

More information

You will find more information on the topic of Industrial Security on the Internet at:
www.siemens.com/industrialsecurity

© Siemens AG 2014

SCALANCE M812-1 and SCALANCE M816-1 ADSL routers

Overview

The SCALANCE M812-1 and M816-1 are DSL routers for low-cost and secure connection of Ethernet-based subnets and programmable controllers to wired telephone or DSL networks and support ASDL2+ (Asynchronous Digital Subscriber Line). This allows the devices to have high downlink data rates of up to 25 Mbit/s and uplink data rates of up to 3.5 Mbit/s.

The security of access and communication is ensured by the security functions of the integrated firewall and by VPN tunnels (end-to-end connection encryption through IPsec tunneling).

Product versions

SCALANCE M812-1:

- 1 x RJ45 interface with 10/100 Mbit/s for Industrial Ethernet
- Router functionality can be activated as required (PPPoE pass through); modem functionality as default value

SCALANCE M816-1:

- 4 x RJ45 interfaces with 10/100 Mbit/s for Industrial Ethernet
- Configuration data can be saved by means of the C-PLUG storage medium (not included in the scope of delivery)

Benefits

get Designed for Industry

- High security standards by means of a firewall (stateful packet inspection) and VPN connections (IP-Sec) as an integral component of the Industrial Security concept
- Low investment and operating costs for operator control and monitoring of remotely connected substations
- Reduction in traveling costs and personnel costs due to remote programming and diagnostics via wired telephone or DSL networks
- Easy to use with existing infrastructure
- Improved manageability thanks to mechanical integration due to the design (module format) with S7-1500 / ET 200MP
- Wide application area thanks to large bandwidth, high performance and speed
- Worldwide application

Application

The SCALANCE M812-1 and M816-1 are suitable for industrial and semi-industrial applications:

- Worldwide remote programming and servicing, e.g. using STEP 7 via mobile wireless
- Worldwide flexible plant access for servicing and diagnostics purposes
- Connection of static stations for controlling and monitoring such things as
  - Water/wastewater treatment plants
  - Oil and gas supplies
  - District heating networks
  - Power distribution
  - Pumping stations
  - Transportation systems
- Worldwide condition monitoring, e.g. for
  - Wind energy and photovoltaic plants

Note:

Due to the integral security functions, the SCALANCE M812-1 and M816-1 DSL routers enable a protected connection of distributed automation cells to a control center via wired telephone or DSL networks and it can be used within the scope of the Siemens Remote Service. This comprehensive service allows companies to task Siemens with the monitoring, control and maintenance of distant plants and machines via remote access.

Design

- Available as Annex A (DSL over POTS) and Annex B (DSL over ISDN) version
- The rugged plastic enclosure supports the following mounting methods:
  - S7-1500 mounting rail
  - S7-300 mounting rail
  - DIN rail mounting
  - Wall mounting
- 1 x or 4 x RJ45 interfaces with 10/100 Mbit/s for Industrial Ethernet
- Diagnostic LEDs for modem status, connection control, and DI/DO channels
- SET button
- 5-pin screw terminal for redundant connection to the 24 V DC power supply
- 2-pin screw terminal for a digital input
- 2-pin screw terminal for a digital output
- 1 x RJ45 connection for ADSL2+

© Siemens AG 2014

Function

- Automatic setup and holding of IP-based online connection to the Internet
- Merging of distributed, IP-based networks via wired telephone or DSL networks
- Bi-directional IP-based data communication with a telecontrol center, e.g. ST7cc or ST7sc, WinCC or PCS 7
- Integrated security functions with firewall (stateful inspection)
- Integrated IPsec VPN tunnel encryption
- Data exchange between telecontrol stations (slave-slave communication) via a TIM communication module in the service center
- Secure data communication with the SINAUT ST7 stations

Configuration

- User-friendly configuration of all network and firewall parameters of the router using the web browser
  - CLI (Command Line Interface) available soon
  - Integration in TIA Portal available soon

Security

- Router for data transmission via public networks with NAT functionality (NAT Traversal, NAPT, 1:1-NAT)
- VPN termination
  - By means of IPsec protocol
  - OpenVPN available soon
- Firewall for protection against unauthorized access; the dynamic packet filter checks data packets based on the source and target address (Stateful Inspection)

Diagnostics / maintenance

- Connection buildup status and status of an existing connection via front LED display

Preconditions for using the SCALANCE M812-1 and 816-1 DSL routers

- Contract with a DSL provider with ADSL/ADSL2/ADSL2+ support
- Clarification in advance with the DSL provider about Annex A and Annex B support is required

Integration

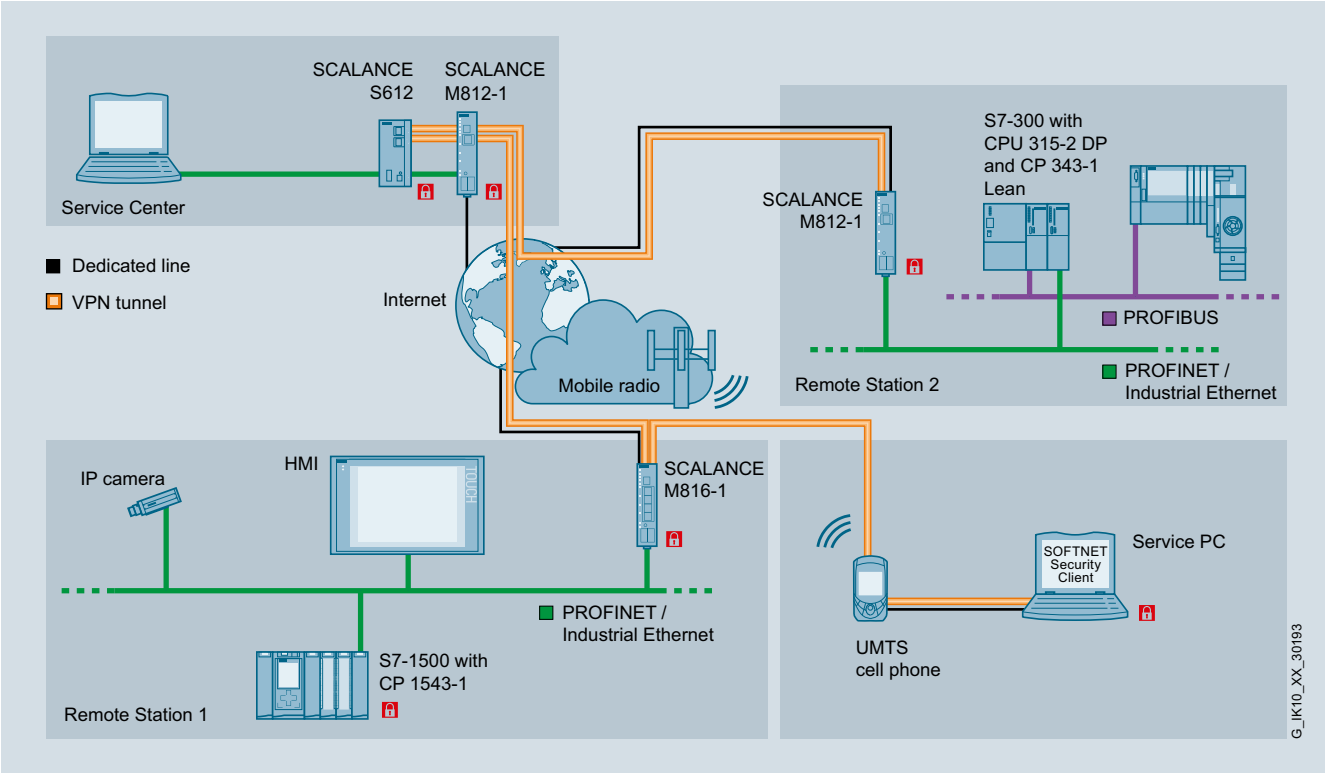

Application example: SCALANCE M812-1 and M816-1 for remote maintenance with VPN tunnel

© Siemens AG 2014

Technical specifications

Article No.	6GK5812-1AA00-2AA2	6GK5812-1BA00-2AA2	6GK5816-1AA00-2AA2	6GK5816-1BA00-2AA2
Product-type designation	**SCALANCE M812-1 ADLSL2+ (Annex A)**	**SCALANCE M812-1 ADLSL2+ (Annex B)**	**SCALANCE M816-1 ADLSL2+ (Annex A)**	**SCALANCE M816-1 ADLSL2+ (Annex B)**
Transmission rate				
Transmission rate				
• 1 for Industrial Ethernet	10 Mbit/s	10 Mbit/s	10 Mbit/s	10 Mbit/s
• 2 for Industrial Ethernet	100 Mbit/s	100 Mbit/s	100 Mbit/s	100 Mbit/s
• for ADSL2+ transmission				
- downlink maximum	25 Mbit/s	25 Mbit/s	25 Mbit/s	25 Mbit/s
- uplink maximum	1.4 Mbit/s	1.4 Mbit/s	1.4 Mbit/s	1.4 Mbit/s
• for SHSDL transmission maximum	-	-	-	-
Interfaces				
Number of electrical connections				
• for internal network	1	1	4	4
• for external network	1	1	1	1
Design of the electrical connection				
• for internal network	RJ45 port (10/100 Mbit/s, TP, autocrossover)	RJ45 port (10/100 Mbit/s, TP, autocrossover)	RJ45 port (10/100 Mbit/s, TP, autocrossover)	RJ45 port (10/100 Mbit/s, TP, autocrossover)
• for external network	RJ45 port	RJ45 port	RJ45 port	RJ45 port
Signal-Inputs/outputs				
Number of electrical connections				
• for digital input signals	1	1	1	1
• for digital output signals	1	1	1	1
Design of electrical connection				
• for digital input signals	Terminal block	Terminal block	Terminal block	Terminal block
• for digital output signals	Terminal block	Terminal block	Terminal block	Terminal block
WAN connection				
Type of WAN connection is supported				
• ADSL	Yes	Yes	Yes	Yes
• ADSL2	Yes	Yes	Yes	Yes
• ADSL2+	Yes	Yes	Yes	Yes
Operating mode for ADSL2/ADSL2+ is supported				
• Annex A	Yes	No	Yes	No
• Annex I	Yes	Yes	Yes	Yes
• Annex L	Yes	Yes	Yes	Yes
• Annex B	No	Yes	No	Yes
• Annex J	Yes	Yes	Yes	Yes
• Annex M	Yes	Yes	Yes	Yes
Type of WAN connection is supported SHSDL	-	-	-	-
Supply voltage, current consumption, power loss				
Type of supply voltage	DC	DC	DC	DC
Supply voltage	24 V	24 V	24 V	24 V
Supply voltage				
• minimum	10.8 V	10.8 V	10.8 V	10.8 V
• maximum	28.8 V	28.8 V	28.8 V	28.8 V
Consumed current maximum	-	-	-	-
Active power loss maximum	8 W	8 W	8 W	8 W

© Siemens AG 2014

Technical specifications (continued)

Article No.	6GK5812-1AA00-2AA2	6GK5812-1BA00-2AA2	6GK5816-1AA00-2AA2	6GK5816-1BA00-2AA2
Product-type designation	**SCALANCE M812-1 ADSL2+ (Annex A)**	**SCALANCE M812-1 ADSL2+ (Annex B)**	**SCALANCE M816-1 ADSL2+ (Annex A)**	**SCALANCE M816-1 ADSL2+ (Annex B)**
Permitted ambient conditions				
Ambient temperature				
• during operating	0 … 60 °C	0 … 60 °C	0 … 60 °C	0 … 60 °C
• during storage	-40 … +70 °C	-40 … +70 °C	-40 … +70 °C	-40 … +70 °C
Relative humidity at 25 °C during operating maximum	95 %	95 %	95 %	95 %
Protection class IP	IP20	IP20	IP20	IP20
Design, dimensions and weight				
Design	compact	compact	compact	compact
Depth	127 mm	127 mm	127 mm	127 mm
Height	147 mm	147 mm	147 mm	147 mm
Width	35 mm	35 mm	35 mm	35 mm
Net weight	400 g	400 g	400 g	400 g
Mounting type				
• 35 mm DIN rail mounting	Yes	Yes	Yes	Yes
• S7-300 rail mounting	Yes	Yes	Yes	Yes
• S7-1500 rail mounting	Yes	Yes	Yes	Yes
• wall mounting	Yes	Yes	Yes	Yes
Mounting type	-	-	-	-
Product properties, functions, components general				
Product function				
• DynDNS client	Yes	Yes	Yes	Yes
• no-ip.com client	Yes	Yes	Yes	Yes
Product functions management, configuration				
Product function				
• CLI	No	No	No	No
• web-based management	Yes	Yes	Yes	Yes
• MIB support	Yes	Yes	Yes	Yes
• TRAPs via email	Yes	Yes	Yes	Yes
Protocol is supported				
• Telnet	No	No	No	No
• HTTP	Yes	Yes	Yes	Yes
• HTTPS	Yes	Yes	Yes	Yes
Type of configuration	Web-based management	Web-based management	Web-based management	Web-based management
Product functions Diagnosis				
Product function				
• Statistics Packet Size	No	No	No	No
• Statistics packet type	No	No	No	No
• Error statistics	No	No	No	No
• SysLog	Yes	Yes	Yes	Yes
• Packet Filter Log	Yes	Yes	Yes	Yes
Product functions DHCP				
Product function				
• DHCP client	Yes	Yes	Yes	Yes
• DHCP server - internal network	Yes	Yes	Yes	Yes
Product functions Routing				
Router function				
• NAT (IP masquerading)	Yes	Yes	Yes	Yes
• Port Forwarding	Yes	Yes	Yes	Yes
• NAT traversal	Yes	Yes	Yes	Yes
• 1:1 NAT	Yes	Yes	Yes	Yes
• DNS cache	Yes	Yes	Yes	Yes

© Siemens AG 2014

Technical specifications (continued)

Article No.	6GK5812-1AA00-2AA2	6GK5812-1BA00-2AA2	6GK5816-1AA00-2AA2	6GK5816-1BA00-2AA2
Product-type designation	**SCALANCE M812-1 ADLSL2+ (Annex A)**	**SCALANCE M812-1 ADLSL2+ (Annex B)**	**SCALANCE M816-1 ADLSL2+ (Annex A)**	**SCALANCE M816-1 ADLSL2+ (Annex B)**
Product functions Security				
Design of the firewall	Stateful inspection	Stateful inspection	Stateful inspection	Stateful inspection
Product function				
• Password protection	Yes	Yes	Yes	Yes
• packet filter	Yes	Yes	Yes	Yes
• Broadcast/Multicast/Unicast Limiter	No	No	No	No
• broadcast blocking	No	No	No	No
Suitability for installation Virtual Private Network	Yes	Yes	Yes	Yes
Product function with VPN connection	-	-	-	-
Number of possible connections for VPN connection	20	20	20	20
Number of network stations for internal network with VPN connection maximum	-	-	-	-
Type of authentication with Virtual Private Network PSK	Yes	Yes	Yes	Yes
Protocol is supported IPsec tunnel and transport mode	Yes	Yes	Yes	Yes
Key length				
• with IPsec DES with Virtual Private Network	56 bit	56 bit	56 bit	56 bit
• 1 with IPsec AES with Virtual Private Network	128 bit	128 bit	128 bit	128 bit
• 2 with IPsec AES with Virtual Private Network	192 bit	192 bit	192 bit	192 bit
• 3 with IPsec AES with Virtual Private Network	256 bit	256 bit	256 bit	256 bit
Type of Internet key exchange with Virtual Private Network main mode	Yes	Yes	Yes	Yes
Key length with IPsec 3DES with Virtual Private Network	168 bit	168 bit	168 bit	168 bit
Type of Internet key exchange with Virtual Private Network quick mode	Yes	Yes	Yes	Yes
Type of packet authentication with Virtual Private Network	MD5, SHA-1	MD5, SHA-1	MD5, SHA-1	MD5, SHA-1
IETF profile with Virtual Private Network X.509v3 certificate	Yes	Yes	Yes	Yes
Product functions Time				
Protocol is supported				
• NTP	Yes	Yes	Yes	Yes
• SNTP	Yes	Yes	Yes	Yes
Standards, specifications, approvals				
Standard				
• for EMC	-	-	-	-
• for EMC from FM	-	-	-	-
• for hazardous zone	-	-	-	-
• for safety of CSA and UL	-	-	-	-
• for hazardous area of CSA and UL	-	-	-	-
• for emitted interference	-	-	-	-
• for interference immunity	-	-	-	-
Verification of suitability	-	-	-	-
• CE mark	Yes	Yes	Yes	Yes
• C-Tick	-	-	-	-
• E1 approval	-	-	-	-
• e1 approval	-	-	-	-
• Railway application in accordance with EN 50155	-	-	-	-

© Siemens AG 2014

Ordering data

	Article No.
SCALANCE M81x-1 DSL router	
DSL router for wired IP communication from Industrial Ethernet-based subnets and programmable controllers via telephone or DSL networks; with integrated firewall and VPN with IPsec; 1 x or 4 x RJ45 ports for Industrial Ethernet, 1 x RJ45 port for DSL	
• SCALANCE M812-1 (Annex A)	**6GK5812-1AA00-2AA2**
• SCALANCE M812-1 (Annex B)	**6GK5812-1BA00-2AA2**
• SCALANCE M816-1 (Annex A)	**6GK5816-1AA00-2AA2**
• SCALANCE M816-1 (Annex B)	**6GK5816-1BA00-2AA2**
Accessories	
IE FC RJ45 Plug 180	
RJ45 plug connector for Industrial Ethernet with a rugged metal enclosure and integrated insulation displacement contacts for connecting Industrial Ethernet FC installation cables; with 180° cable outlet; for network components and CPs/CPUs with Industrial Ethernet interface	
• 1 pack = 1 unit	**6GK1901-1BB10-2AA0**
• 1 pack = 10 units	**6GK1901-1BB10-2AB0**
• 1 pack = 50 units	**6GK1901-1BB10-2AE0**
C-PLUG	**6GK1900-0AB00**
Swap medium for simple replacement of devices in the event of a fault; for storing configuration data; can be used in SIMATIC NET products with PLUG compartment	
IE TP Cord RJ45/RJ45	
TP cable 4 x 2 with 2 RJ45 connectors	
• 0.5 m	**6XV1870-3QE50**
• 1 m	**6XV1870-3QH10**
• 2 m	**6XV1870-3QH20**
• 6 m	**6XV1870-3QH60**
• 10 m	**6XV1870-3QN10**

Note:

Order data for further security products with firewall and VPN functionality can be found under Industrial Security

More information

You will find more information on the topic of Industrial Security on the Internet at:
www.siemens.com/industrialsecurity

© Siemens AG 2014

SCALANCE M826-2 SHDSL router

Overview

The SCALANCE M826-2 is an SHDSL modem for low-cost, secure connection of Ethernet-based subnets and programmable controllers via existing two-wire or stranded cables and supports the ITU-T standard G.991.2 as well as SHDSL.biz (single-pair high-speed digital subscriber line). This gives the device high symmetrical data rates of up to 15.3 Mbit/s per wire pair.

The security of access and communication is ensured by the security functions of the integrated firewall and by VPN tunnels (end-to-end connection encryption through IPsec tunneling).

Benefits

get Designed for Industry

- High security standards by means of a firewall (Stateful Packet Inspection) and VPN connections (IP-Sec) as an integral component of the Industrial Security concept
- Low investment and operating costs for operator control and monitoring of remotely connected substations
- Protection of investments: Continued use of existing cable infrastructure for Ethernet transfer up to a distance of at least 10 km
- Simple and low-cost migration from classical remote communication to IP-based remote communication
- Alternative use instead of optical communication for Ethernet transfer over long distances using two-wire lines
- Improved manageability thanks to mechanical integration due to the design (module format) with S7-1500 / ET200MP
- Wide application area thanks to large bandwidth, high performance and speed
- Worldwide application

Application

The SCALANCE M826-2 can be used in industrial and semi-industrial applications:

- Remote programming and servicing, e.g. using STEP 7 via two-wire lines
- Connection of static stations for controlling and monitoring such things as
  - Water/wastewater treatment plants
  - Oil and gas supplies
  - District heating networks
  - Power distribution
  - Pumping stations
  - Transportation systems

Design

- The rugged plastic enclosure supports the following mounting methods:
  - S7-1500 mounting rail
  - S7-300 mounting rail
- DIN rail mounting
  - Wall mounting
- 4 x RJ45 interfaces with 10/100 Mbit/s for Industrial Ethernet
- Diagnostic LEDs for modem status, connection control, and DI/DO channels
- SET button
- 5-pole screw terminal for redundant connection to the 24 V DC power supply
- 2-pole screw terminal for a digital input
- 2-pole screw terminal for a digital output
- 2 x 2-pole screw terminal for connecting to one twin wire each for SHDSL communication

Function

- Automatic setup and maintaining of IP-based connection via two-wire lines
- Merging of distributed, IP-based networks via two or multi-wire line infrastructure
- Bi-directional IP-based data communication with a telecontrol center, e.g. ST7cc or ST7sc, WinCC or PCS 7
- Integrated security functions with firewall (Stateful Inspection)
- Integrated IPsec VPN tunnel encryption
- Data exchange between telecontrol stations (slave-slave communication) via a TIM communication module in the service center
- Secure data communication with the SINAUT ST7 stations

© Siemens AG 2014

Function (continued)

Data rates depending on the distance

- The resulting data rate depends on the following parameters
  - The length of a two-wire line
  - The cross-section of the two-wire line used
  - Age and quality of the two-wire line used

Distance [km]	Bandwidth [Mbit/s] (copper core pair with a diameter of 0.6 mm^2)	Bandwidth [Mbit/s] (copper core pair with a diameter of 1.4 mm^2)
0.2	13.3	14.0
0.5	11.8	13.2
1	9.24	11.6
2.5	4.47	7.92
5	1.33	4.18
7.5	0.40	2.21
10	0.124	1.20

Supported topologies

- Point-to-point connection
- Aggregation of two twin wires as a virtual connection with double data rate
- Setup of line topologies

Configuration

- User-friendly configuration of all network and firewall parameters of the router using the web browser
  - CLI (Command Line Interface) available soon
  - Integration in TIA Portal available soon

Security

- Router for data transmission via private two-wire line infrastructures with NAT functionality (NAT Traversal, NAPT, 1:1-NAT)
- Standardized VPN termination of the control center
  - By means of IPsec protocol
  - OpenVPN available soon
- Firewall for protection against unauthorized access; the dynamic packet filter checks data packets based on the source and target address (Stateful Inspection)

Diagnostics / maintenance

- Connection buildup status and status of an existing connection via front LED display

Integration

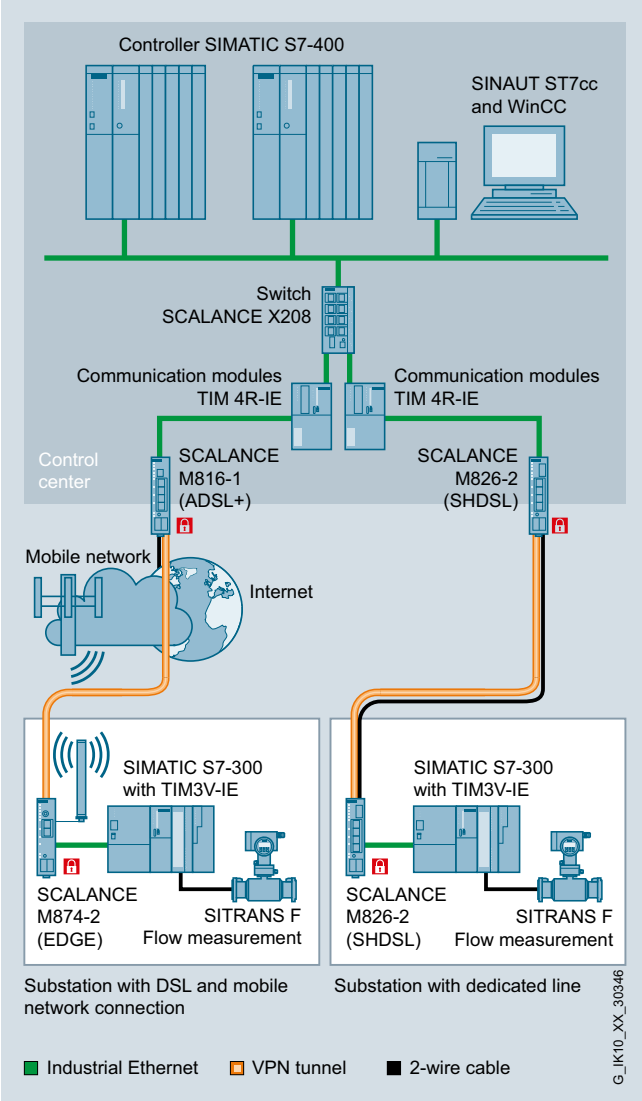

Connecting telecontrol substations to the telecontrol center using SCALANCE M routers

Application example for SCALANCE M826-2

The application examples given here show a typical telecontrol application with Telecontrol Professional, consisting of a telecontrol center with ST7cc/ST7sc. The following example shows a TIM 4R-IE that is connected via one of its two Ethernet interfaces with the control center PC (e.g. ST7cc). SINAUT stations are connected over the second Ethernet port using the SCALANCE M826-2 over SHDSL two-wire lines.

It is possible to operate up to 30 SINAUT dedicated line modems on this port. If the stations in this network have to be provided with the date and time, the control center PC assumes the function of the clock-time master. Via the Ethernet connection, the TIM 4R-IE is regularly synchronized by the PC and it then takes over the synchronization of the connected stations.

© Siemens AG 2014

Technical specifications

Article No.	6GK5826-2AB00-2AB2
Product-type designation	**SCALANCE M826-2 SHDSL**
Transmission rate	
Transfer rate	
• 1 for Industrial Ethernet	10 Mbit/s
• 2 for Industrial Ethernet	100 Mbit/s
Transmission rate for SHSDL transmission maximum	15.3 Mbit/s
Interfaces	
Number of electrical connections	
• for internal network	4
• for external network	2
Design of the electrical connection	
• for internal network	RJ45 port (10/100 Mbit/s, TP, autocrossover)
• for external network	Terminal strip
Signal-Inputs/outputs	
Number of electrical connections	
• for digital input signals	1
• for digital output signals	1
Design of electrical connection	
• for digital input signals	Terminal block
• for digital output signals	Terminal block
WAN connection	
Type of WAN connection is supported SHSDL	Yes
Supply voltage, current consumption, power loss	
Type of supply voltage	DC
Supply voltage	24 V
Supply voltage	
• minimum	10.8 V
• maximum	28.8 V
Consumed current maximum	-
Active power loss maximum	8 W
Permitted ambient conditions	
Relative humidity at 25 °C during operating maximum	95 %
Protection class IP	IP 20

Article No.	6GK5826-2AB00-2AB2
Product-type designation	**SCALANCE M826-2 SHDSL**
Design, dimensions and weight	
Design	compact
Depth	127 mm
Height	147 mm
Width	35 mm
Net weight	-
Mounting type	
• 35 mm DIN rail mounting	Yes
• S7-300 rail mounting	Yes
• S7-1500 rail mounting	Yes
• wall mounting	Yes
Product properties, functions, components general	
Product function	
• DynDNS client	Yes
• no-ip.com client	Yes
Product functions management, configuration	
Product function	
• CLI	No
• web-based management	Yes
• MIB support	Yes
• TRAPs via email	Yes
Protocol is supported	
• Telnet	No
• HTTP	Yes
• HTTPS	Yes
Type of configuration	Web-based management
Product functions Diagnosis	
Product function	
• Statistics Packet Size	No
• Statistics packet type	No
• Error statistics	No
• SysLog	Yes
• Packet Filter Log	Yes
Product functions DHCP	
Product function	
• DHCP client	Yes
• DHCP server - internal network	Yes
Product functions Routing	
Router function	
• NAT (IP masquerading)	Yes
• Port Forwarding	Yes
• NAT traversal	Yes
• 1:1 NAT	Yes
• DNS cache	Yes

© Siemens AG 2014

Technical specifications (continued)

Article No.	6GK5826-2AB00-2AB2
Product-type designation	**SCALANCE M826-2 SHDSL**
Product functions Security	
Design of the firewall	Stateful inspection
Product function	
• Password protection	Yes
• packet filter	Yes
• Broadcast/Multicast/Unicast Limiter	No
• broadcast blocking	No
Suitability for installation Virtual Private Network	Yes
Product function with VPN connection	Yes
Number of possible connections for VPN connection	20
Number of network stations for internal network with VPN connection maximum	-
Type of authentication with Virtual Private Network PSK	Yes
Protocol is supported IPsec tunnel and transport mode	Yes
Key length	
• with IPsec DES with Virtual Private Network	56 bit
• 1 with IPsec AES with Virtual Private Network	128 bit
• 2 with IPsec AES with Virtual Private Network	192 bit
• 3 with IPsec AES with Virtual Private Network	256 bit
Type of Internet key exchange with Virtual Private Network main mode	Yes
Key length with IPsec 3DES with Virtual Private Network	168 bit
Type of Internet key exchange with Virtual Private Network quick mode	Yes
Type of packet authentication with Virtual Private Network	MD5, SHA-1
IETF profile with Virtual Private Network X.509v3 certificate	Yes
Product functions Time	
Protocol is supported	
• NTP	Yes
• SNTP	Yes
Standards, specifications, approvals	
Verification of suitability	
• CE mark	Yes

Ordering data

	Article No.
SCALANCE M826-2 DSL router	
DSL router for wired IP communication from Industrial Ethernet-based subnets and programmable controllers via telephone or DSL networks; with integrated firewall and VPN with IPsec; 1 x or 4 x RJ45 ports for Industrial Ethernet; 1 x RJ45 port for DSL	
• SCALANCE M826-2 (Annex A)	**6GK5826-2AB00-2AB2**
Accessories	
IE FC RJ45 Plug 180	
RJ45 plug connector for Industrial Ethernet with a rugged metal enclosure and integrated insulation displacement contacts for connecting Industrial Ethernet FC installation cables; with 180° cable outlet; for network components and CPs/CPUs with Industrial Ethernet interface	
• 1 pack = 1 unit	**6GK1901-1BB10-2AA0**
• 1 pack = 10 units	**6GK1901-1BB10-2AB0**
• 1 pack = 50 units	**6GK1901-1BB10-2AE0**
C-PLUG	**6GK1 900-0AB00**
Swap medium for simple replacement of devices in the event of a fault; for storing configuration data; can be used in SIMATIC NET products with PLUG compartment	
IE TP Cord RJ45/RJ45	
TP cable 4 x 2	
with 2 RJ45 connectors	
• 0.5 m	**6XV1870-3QE50**
• 1 m	**6XV1870-3QH10**
• 2 m	**6XV1870-3QH20**
• 6 m	**6XV1870-3QH60**
• 10 m	**6XV1870-3QN10**

Note:

Order data for further security products with firewall and VPN functionality can be found under Industrial Security

More information

You will find more information on the topic of Industrial Security on the Internet at:
http://www.siemens.com/industrialsecurity

To assist in selecting the right products for Industrial Wireless Communication, the SIMATIC NET Selection Tool is available at:
http://www.siemens.com/snst

© Siemens AG 2014

Overview

SINAUT MD3 modem

Modems are used for wired transmission of signals and data between individual stations and the control center of a tele-control system. Siemens offers appropriate modems for both dedicated lines and dial-up networks.

Like the TIM modules, these are accommodated in an S7-300 enclosure:

- **MD2;**
  dedicated-line modem for multi-point connection,
  can be tapped,
  can also be used as a repeater,
  max. 19 200 bps
- **MD3;**
  modem for the analog telephone network,
  max. 33 600 bps;
  can also be used as a dedicated-line modem for a point-to-point connection,
  max. 33 600 bps in voice band

These modems can be connected to the serial modem interface of a TIM module.

The modems are supplied together with the WAN connecting cable required in each case. Connecting cables for connecting the modems to a TIM must be ordered separately.

Benefits

get Designed for Industry

- Diverse application options for use in dedicated-line networks or for conventional telephone networks (analog, ISDN, GSM)
- Matched to the telecontrol system by means of the design of the SIMATIC S7-300
- Electrical isolation between power supply and WAN interface

Application

The modems can be used in other applications as dedicated-line modems or dial-up modems independently of the SINAUT ST7 system.

Due to the design and the electrical properties, the modems are suited above all for applications in the industrial sector.

Design

All three modem types are identically designed and offer all the advantages of the SIMATIC S7-300 design:

- Compact construction;
  double standard width of SIMATIC S7-300 SM modules
- RJ12 socket for connecting the modem to the WAN (leased line or dialup network)
- 9-pin Sub-D connector with an RS232 interface for connection to the serial interface of a communication module, e.g. TIM
- 9-pin Sub-D socket with an RS 485 interface for connection to the serial interface of a communication module, e.g. TIM
- 4-pin plug-in terminal strip for connection of the 24 V DC external supply voltage
- Front-panel LEDs indicating TXD, RXD, DTR, RTS/ONL, CTS/RI and DCD
- Simple installation;
  on a mounting rail of the S7-300, or on a 35 mm standard rail
- The SINAUT ST7 modems can be operated without a fan

© Siemens AG 2014

Design (continued)

Configuration examples

An MDx modem is connected to a TIM by means of a standard connecting cable of type 7701. The modem is mounted on a separate S7-300 mounting rail or on a 35 mm standard mounting rail (an appropriate adapter is available).

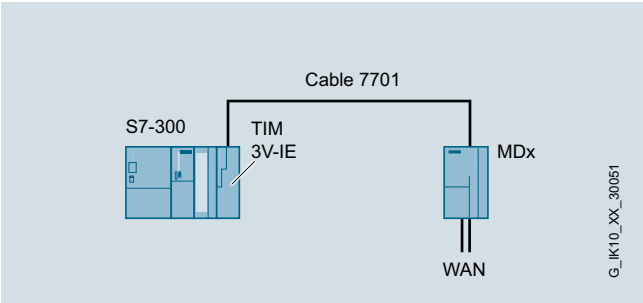

In the following configuration, the modem is accommodated to the far right in the rack. The TIM is connected to the adjacent module by means of a bus connector. There is no bus connector between TIM and modem. This means that no S7 modules may be used immediately to the right of the modem.

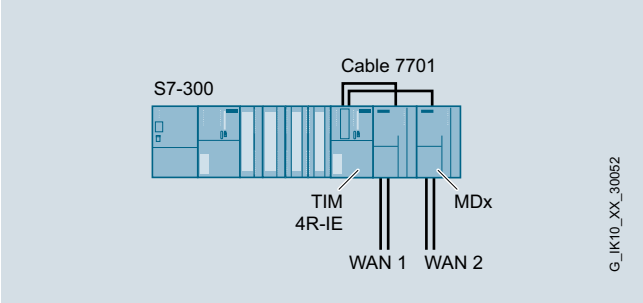

In an S7-400 with TIM 4R-IE the TIM and modem are mounted together on a separate S7-300 mounting rail. The TIM is connected to the CPU by means of one of its Ethernet interfaces. The TIM and MDx modem are connected by means of a standard connecting cable of type 7701.

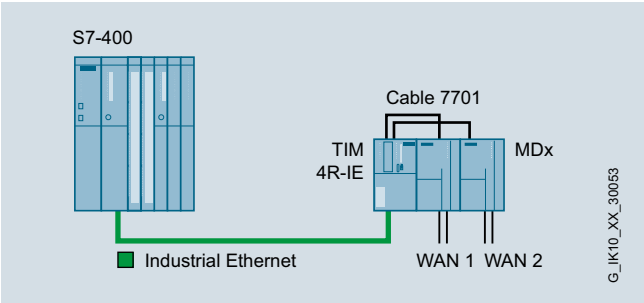

The following configuration shows the connection of a point-to-point dedicated line network to a TIM 4R-IE, which is used as a control center TIM, for example on the control center PC (e.g. SINAUT ST7cc or ST7sc). Each cable belonging to the point-to-point network is terminated with a modem in the control center. All these modems are connected by means of their RS485 interface to the RS232/RS485 interface of the TIM 4R-IE.

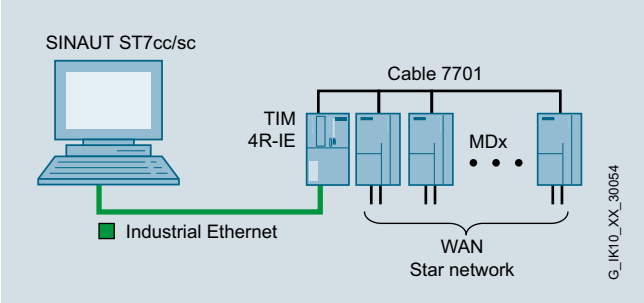

© Siemens AG 2014

MD2 dedicated line modem

Overview

- Frequency-modulated (FSK) dedicated line modem;
- Half-duplex data transfer over 2-wire dedicated line, duplex data transfer over 4-wire dedicated line
- Thanks to the modem's relaying ability, lines with several connected stations can also be implemented. The MD2 can also be used as repeater on 2-wire and 4-wire dedicated lines.
- Private or leased telephone lines can be used as dedicated lines. The MD2 is also suitable for connection to a radio device with modem input.

Benefits

get Designed for Industry

- RS 232 and RS 485 interface
- Isolation between voltage supply and RS 232/RS 485 interface
- 4 different transmission rates to select
- Supports tandem stations
- Integrated double transformer for the connection of two 2-wire lines
- Integrated repeater function for multiplication of range
- Suitable for connection to a wireless device with modem input

Application

The MD2 modem can be used as a dedicated-line modem independently of the SINAUT ST7 system. Due to its design and the electrical properties, the MD2 is especially suited for use in the industrial sector.

Examples of use outside the SINAUT ST7 system:

- Extension of Profibus and MPI links;
  see FAQ 23671172 (for PB) or 23671640 (for MPI)
- As leased line modem for S7-200;
  see Micro Automation Set MAS 17

The MD2 enables distances of up to 33 km (at 1 200 bit/s), 27 km (at 2 400 bit/s) and up to 11 km (at 9 600 and 19 200 bit/s) to be spanned without amplifiers/repeaters (guide values for uncoiled communication cable of type 2 x 2 x 0.8 J-Y(St)Y). By interconnecting two MD2 modems to a repeater, the specified distances can be extended several times.

The MD2 modem permits the construction of network structures in the "point-to-point", "star" or "linear" configurations, as well as combinations of these basic structures. If the modem is used in the control center, a small star network comprising two 2-wire cables can be connected at the modem output. By connecting several MD2s (max. 32) by means of their RS 485 interfaces, the star network can be expanded to a multiple of 2 x 2-wire.

For the arrangement of an MD2 along a line, the modem output can be switched to high impedance. This reduces the insertion loss to a minimum and thus only marginally reduces the maximal bridgeable distance. The very short transmitter make-times ensure a prompt execution of the data traffic with the "polling" used in the dedicated line network.

Apart from private dedicated lines, the MD2 can also be connected to Telekom leased lines. Corresponding approval exists. In the case of exclusively analog leased lines, the transmission rates 1 200 and 2 400 bit/s are possible, whereas for analog/digital-converted leased lines the speed is usually limited to 1 200 bit/s for technical reasons.

The MD2 is also ideal for data transmission via a walkie-talkie with modem input. In order to switch the walkie-talkie on and off via its PTT input, a floating optical relay is integrated in the MD2 modem that is linked with the RTS signal of the RS 232 interface. The two connections of the optical relay are available on the RJ12 socket.

As walkie-talkies usually only transmit voice signals in the 300 to 3 000 Hz frequency range, the transmission rate with the MD2 modem is limited here to 1 200 bit/s. For 2 400 bit/s, the frequency range would have to exceed 3 300 Hz.

© Siemens AG 2014

Design

The MD2 modem offers all the advantages of the SIMATIC S7-300 design:

- Compact construction;
  double standard width of SIMATIC S7-300 SM modules
- RJ12 socket for connecting the modem to the dedicated line
- 9-pin Sub-D connector with an RS 232 interface for connecting the modem to the RS 232/RS 485 interface of the TIM
- 9-pin Sub-D connector with an RS485 interface for connecting the modem to the RS232/RS485 interface of the TIM
- 4-pin plug-in terminal strip for connection of the 24 V DC external supply voltage
- Front-panel LEDs indicating TXD, RXD, DTR, RTS/ONL, CTS/RI and DCD
- Easy installation;
  the modem is mounted on an S7-300 mounting rail; alternatively, it can be mounted on a 35 mm standard rail using the adapter 6NH7760-0AA0, available separately.
- The modem can be operated without a fan.

Integration

Various ways in which the MD2 modem can be connected to a TIM or other MD2 modems, as well as to the dedicated line (via an LTOP overvoltage protection module), are illustrated below.

Connection of an MD2 to a TIM via the RS 232 interface

One MD2 modem can be connected to a TIM via the RS232 interface. This technique can be used to set up "point-to-point" and "line" network configurations as well as a small star network (only with TIM 4) with only two 2-wire lines.

Connection of several MD2s to a TIM via the RS 485 interface

Several MD2 modems can be connected to a TIM 4 via the RS 485 interface. This type of interconnection is used if a number of dedicated lines have to be combined on a single WAN port on the TIM, i.e. if a star topology is connected, as illustrated schematically below.

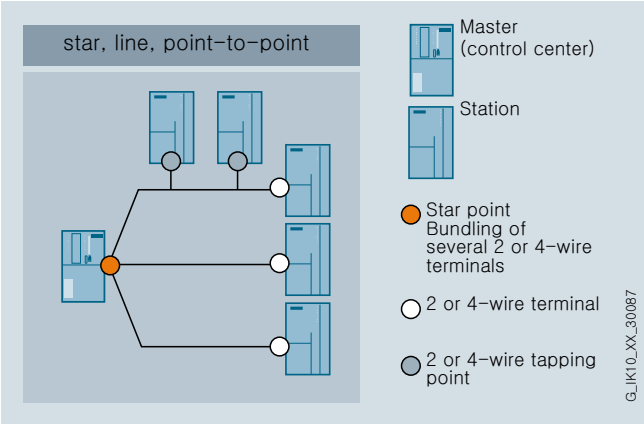

Calculating the maximum range (in km) based on transmission rate and wire diameter

The table below can be used to calculate approximate values for the maximum distance in km which can be covered by the MD2 modem, depending on transmission rate and wire diameter.

The values in the table are guide values for non-coil-loaded message lines type 2 x 2 x A J-Y(St)Y (A = core diameter in mm).

A level reserve of 4 dB was applied when calculating the maximum ranges. This should ensure that even in the event of deviations in cable characteristics, which experience has shown to be possible during operation, the level will always be sufficient to ensure fault-free data transmission.

© Siemens AG 2014

Integration (continued)

Transfer rate (bps)	Maximum range (km)			
	Transmission level –6 dB [1]		Transmission level 0 dB [1]	
	With LTOP	Without LTOP	With LTOP	Without LTOP
Core diameter 0.6 mm				
1 200	21.7 – AST x 0.6	22 – AST x 0.3	25.7 – AST x 0.6	26 – AST x 0.3
2 400	17.6 – AST x 0.4	17.8 – AST x 0.2	20.8 – AST x 0.4	21 – AST x 0.2
9 600 / 19 200	7.2. – AST x 0.6	7.6 – AST x 0.1	8.6 – AST x 0.6	9 – AST x 0.1
Core diameter 0.8 mm				
1 200	28.3 – AST x 0.7	28.6 – AST x 0.4	33.5 – AST x 0.7	33.9 – AST x 0.4
2 400	23.2 – AST x 0.5	23.5 – AST x 0.2	27.5 – AST x 0.5	27.8 – AST x 0.2
9 600 / 19 200	9.6 – AST x 0.7	10.3 – AST x 0.1	11.5 – AST x 0.7	12.1 – AST x 0.1
Core diameter 0.9 mm				
1 200	36.2 – AST x 0.9	36.6 – AST x 0.5	42.8 – AST x 0.9	43.3 – AST x 0.5
2 400	29.6 – AST x 0.6	30 – AST x 0.2	35 – AST x 0.6	35.4 – AST x 0.2
9 600 / 19 200	11.9 – AST x 0.9	12.6 – AST x 0.1	14.2 – AST x 0.9	15 – AST x 0.1
Core diameter 1.2 mm				
1 200	50.1 – AST x 1.3	50.7 – AST x 0.7	59.3 – AST x 1.3	60 – AST x 0.7
2 400	43.4 – AST x 0.8	44 – AST x 0.3	51.4 – AST x 0.8	52 – AST x 0.3
9 600 / 19 200	17.2 – AST x 1.3	18.3 – AST x 0.2	20.5 – AST x 1.3	21.6 – AST x 0.2
Core diameter 1.4 mm				
1 200	59.2 – AST x 1.5	60 – AST x 0.8	70.1 – AST x 1.5	70.9 – AST x 0.8
2 400	54.3 – AST x 1	55 – AST x 0.4	64.3 – AST x 1	65 – AST x 0.4
9 600 / 19 200	20.6 – AST x 1.5	22 – AST x 0.2	24.6 – AST x 1.5	26 – AST x 0.2

AST = number of tandem stations

[1] Not possible on leased telephone lines. Set transmission level to -9 dB.

© Siemens AG 2014

Technical specifications

Article No.	**6NH7810-0AA20**
Product-type designation	**MD 2 dedicated line modem**
Interfaces	
• Connection for dedicated line	1 x RJ12
• RS232 connection for data terminal equipment	1 x 9-pin Sub-D connector
• RS485 connection for data terminal equipment	1 x 9-pin Sub-D socket
• Connection for supply voltage	1 x 4-pin terminal block
Voltage supply	24 V DC
Current consumption	
• from 24 V DC	100 mA
Power loss	2.4 W
Permissible ambient conditions	
• Operating temperature	0 °C … +60 °C
• Transport/storage temperature	-40 °C … +70 °C
• Relative humidity	max. 95 % at +25 °C
Design	
• Module format	Compact module S7-300, double width
• Dimensions (W x H x D) in mm	80 x 125 x 120
• Weight	approx. 300 g
Degree of protection	IP20
Transmission path	2-wire, 2 x 2-wire or 4-wire, twisted pair cable, non-coil-loaded or lightly coil-loaded
Modulation method	Phase-continuous binary frequency modulation (FSK)
Data transmission rates via the dedicated line	1 200 bit/s 2 400 bit/s 9 600 bit/s (not for leased telephone lines) 19 200 bit/s (not for leased telephone lines)

Article No.	**6NH7810-0AA20**
Product-type designation	**MD 2 dedicated line modem**
Operating mode	
• 2-wire or 2 x 2-wire	Half-duplex
• 4-wire	Duplex or half-duplex
Transmission level can be set to	0 dB -6 dB -9 dB (for leased telephone lines) -15 dB
Receiving level	0 … -43 dB
Adjustable terminating resistor	
• for 1200 and 2400 bit/s	600 ohms
• for 9600 and 19200 bit/s	150 ohms
• for tapping point	> 6 kOhms
Clear to send	
• at 1200 bit/s	after 7 ms
• at 2400 bit/s	after 4 ms
• at 9600 and 19200 bit/s	after 0.5 ms
Minimum/maximum scanning frequency	
• at 1200 bit/s	1 300 Hz/2 100 Hz
• at 2400 bit/s	2 400 Hz/3 300 Hz
• at 9600 and 19200 bit/s	20 800 Hz/33 600 Hz
Asynchronous character format	10 or 11 bit
Floating opto-relay output	
• Max. supply voltage	60 V AC/DC
• Max. perm. continuous current	400 mA
• Max. R_{on}	3 ohms
Impulse strength $U_{1.2/50}$ acc. to DIN VDE 0804 between power supply circuit and	
• Power supply circuit and FSK trunk line circuits	2.5 kV
• Power supply circuit and opto-relay output	2.5 kV
Compatible with SINAUT modems	
• MD100	at 1 200 bit/s
• MD124	at 1 200, 2 400 and 19 200 bit/s
Approvals	EU approval CE 0682 X

Ordering data

	Article No.
MD2 dedicated line modem For multi-point connection, supports tandem stations, can also be used as a repeater, max. 19 200 bit/s; incl. WAN connecting cable (RJ12/RJ12) for connecting the modem with an LTOP overvoltage protection module	**6NH7810-0AA20**
Connecting cable For connecting a TIM with one of the SINAUT ST7 MD2, MD3 modems Cable length 1.5 m	
• RS 232	**6NH7701-4AL**
• RS 485 (not for TIM 3V-IE)	**6NH7701-4DL**

	Article No.
Accessories	
Connecting cable For connecting two MD2 modems (RS 232) in order to create a repeater; cable length 0.3 m	**6NH7701-1CB**
Line transformer with overvoltage protection	
• **LTOP1** for 2-wire terminal	**6NH9821-0BC11**
• **LTOP2** for 4-wire terminal, 2 x 2-wire terminal or 2-wire tandem station	**6NH9821-0BC12**
Adapters For mounting the MD2 modem on a 35 mm standard mounting rail	**6NH7760-0AA**
SITOP compact 24 V/0.6 A 1-phase power supply with wide-range input 85 … 264 V AC/110 … 300 V DC, stabilized output voltage 24 V, rated output current value 0.6 A, slim design	**6EP1331-5BA00**

© Siemens AG 2014

MD3 telephone modem

Overview

- Dial-up modem for data transfer using the analog telephone network
- It can also be used as a dedicated line modem.
  Duplex data transfer is thus possible in the voice band over 2-wire dedicated lines.
- Private or leased telephone lines can be used as dedicated lines.

Benefits

get Designed for Industry

- RS 232 and RS 485 interface
- Isolation between voltage supply and RS 232/RS 485 interface
- Transmission rate on the telephone network and dedicated line max. 33 600 bit/s

Application

The MD3 modem can be used as a telephone modem or dedicated-line modem independently of the SINAUT ST7 system. Due to its design and electrical properties, the MD3 is especially suited for use in the industrial sector.

Telephone modem

When used as a telephone modem, it enables connections to be set up with other MD3 or compatible modems, e.g. with the MD125 and MDM2425B DX modems that were used with the SINAUT ST1 system.

Dedicated-line modem:

Apart from private dedicated lines, the MD3 can also be connected to Telekom leased lines. Corresponding approval exists. There are no restrictions in terms of the possible transmission rates either with exclusively analog leased lines or with analog/digital converted leased lines.

When used as a dedicated-line modem on private lines, the MD3 enables distances of up to 34 km (at 300 bit/s), 28 km (at 1 200 to 19 200 bit/s) and up to 19 km (at 33 600 bit/s) to be spanned without amplifiers/repeaters (guide values for uncoiled communication cable of type 2 x 2 x 0.8 J-Y(St)Y).

When connected to Telekom leased lines, any distance can be spanned. Depending on the quality of the leased line in each case, the leased line provider guarantees sufficient reception signal level at both end points. The line qualities M1020 and M1025 are recommended.

Used as a dedicated-line modem, the MD3 enables networks to be constructed in "point-to-point" or "star" configurations. If the modem is used in the central office, the star network can be expanded to as many as 32 point-to-point connections by linking several MD3 modems via their RS485 interface.

Design

The MD3 modem offers all the advantages of the SIMATIC S7-300 design:

- Compact construction;
  double standard width of SIMATIC S7-300 SM modules
- RJ12 socket for connecting the modem via the supplied connecting cable to the telephone jack or the dedicated line
- 9-pin Sub-D connector with an RS 232 interface for connecting the modem to the RS 232/RS 485 interface of the TIM
- 9-pin Sub-D connector with an RS 485 interface for connecting the modem to the RS 232/RS 485 interface of the TIM
- 4-pin plug-in terminal strip for connection of the 24 V DC external supply voltage
- Front-panel LEDs indicating TXD, RXD, DTR, RTS/ONL, CTS/RI and DCD
- Easy installation;
  the modem is mounted on an S7-300 mounting rail; alternatively, it can be mounted on a 35 mm standard rail using the adapter 6NH7760-0AA, available separately.
- The modem can be operated without a fan.

© Siemens AG 2014

Integration

The diagrams below illustrate how the MD3 modem and the TIM module can be connected to the telephone outlet and which configurations are possible when the modem is used as a dedicated-line modem.

Telephone modem: Connection of the MD3 with a TIM and TAE6 telephone outlet

The diagram below illustrates how the MD3 modem, when operating in dial-up mode and using the standard connecting cable specified (the connecting cable is part of the scope of supply of the MD3), is connected to a TIM (via RS232) as well as to the telephone outlet (TAE6N socket). A telephone can be connected to the same telephone outlet in parallel with the modem (via the TAE6F socket).

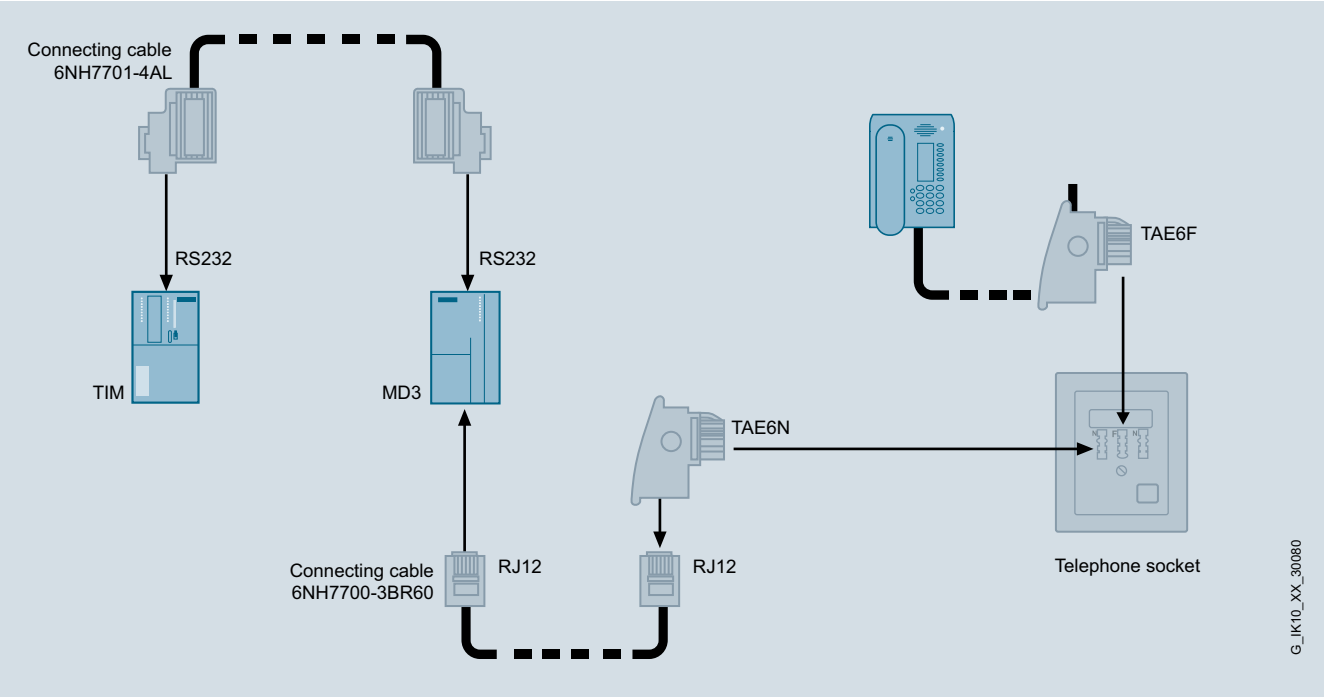

Connection of a MD3 with a TIM and TAE6 telephone outlet

Dedicated-line modem: Connection of an MD3 to a TIM via the RS 232 interface

One MD3 modem can be connected to a TIM via the RS 232 interface. This technique can be used to set up a "point-to-point" network configuration.

Dedicated-line modem: Connection of several MD3 to a TIM via the RS 485 interface

Several MD3 modems can be connected to a TIM via the RS 485 interface. This type of interconnection is used if several dedicated lines have to be combined on a single WAN port on the TIM, i.e. if a point-to-point network is connected.

Dedicated-line modem: Maximum range (in km) of the MD3 modem

The table below can be used to calculate approximate values for the maximum distance in km which can be covered by the MD3 modem, depending on transfer rate.
The values in the table are guide values for non-coil-loaded message lines type 2 x 2 x 0.8 J-Y(St)Y.

A level reserve of 4 dB was applied when calculating the maximum ranges. This should ensure that even in the event of deviations in cable characteristics, which experience has shown to be possible during operation, the level will always be sufficient to ensure fault-free data transmission.

Transfer rate (bps)	Maximum range (km)			
	Transmission level –15 dB		Transmission level -10 dB	
	With LTOP	Without LTOP	With LTOP	Without LTOP
With terminating resistor Z = Zr				
300	29	30	34	35
1 200 to 19 200	23	24	28	29
33 600	14	15	19	20

© Siemens AG 2014

Technical specifications

Article No.	6NH7810-0AA30
Product-type designation	**MD3 telephone modem**
Interfaces	
• Connection for telephone network or dedicated line	1 x RJ12
• RS 232 connection for data terminal equipment	1 x 9-pin Sub-D connector
• RS 485 connection • for data terminal equipment	1 x 9-pin Sub-D socket
• Connection for supply voltage	1 x 4-pin terminal block
Voltage supply	24 V DC
Current consumption	
• from 24 V DC	200 mA
Power loss	4.8 W
Permissible ambient conditions	
• Operating temperature	0 °C … +60 °C
• Transport/storage temperature	-40 °C … +70 °C
• Relative humidity	max. 95 % at +25 °C
Design	
• Module format	Compact module S7-300, double width
• Dimensions (W x H x D) in mm	80 x 125 x 120
• Weight	approx. 300 g
Degree of protection	IP20
Transmission path	Analog dial-up telephone network Dedicated line, 2-wire twisted pair cable, non-coil-loaded
Available ITU transmission standards in analog telephone network	
• V.22	1 200 bit/s, duplex
• V.22 up to	2 400 bit/s, duplex
• V.32 up to	4 800 bit/s, duplex
• V.32 up to	9 600 bit/s, duplex
• V.32 up to	14 400 bit/s, duplex
• V.34 up to	19 200 bit/s, duplex
• V.34 up to	33 600 bit/s, duplex
Error correction	V.42 and MNP4
Data compression	V.42bis and MNP5
Modem control	AT commands V.25bis commands

Article No.	6NH7810-0AA30
Product-type designation	**MD3 telephone modem**
Telephone charge pulse filter can be set to:	12 kHz 16 kHz
Dial-up procedure	Voice frequency dialing Pulse dialing
Loop current component	Available; can be connected and disconnected
Loudspeaker	Available; can be connected and disconnected
Line matching	600 ohms Zr (frequency-dependent)
Transmission level can be set to	-10 dB -15 dB
Asynchronous character format	10 or 11 bits
Standard dedicated-line profiles	300 bit/s (direct) 1 200 bit/s (direct) 2 400 bit/s (direct) 9 600 bit/s (direct) 19 200 bit/s (direct) 19 200 bit/s (buffered) 33 600 bit/s (buffered)
Compatible with SINAUT modems (as telephone modem)	
• MD125	
- V.22	1 200 bit/s, duplex
- V.22 up to	2 400 bit/s, duplex
• MDM2425B DX	
- V.22 up to	2 400 bit/s, duplex
• MD3 (HW version < 4)	
- V.22	1 200 bit/s, duplex
- V.22 up to	2 400 bit/s, duplex
- V.32 up to	4 800 bit/s, duplex
- V.32 up to	9 600 bit/s, duplex
- V.32 up to	14400 bit/s, duplex
Approvals	Europe U.S.A. Canada
Recommended line quality on leased telephone lines	M1020 M1025

Ordering data

	Article No.
MD3 telephone modem For the analog telephone network, max. 33 600 bit/s; can also be used as a dedicated-line modem for a point-to-point connection, max. 33 600 bit/s in voice band; incl. WAN connecting cable (RJ12 -RJ12/TAE6) with snap-on TAE6N connector for connecting the modem to a telephone outlet (TAE6N or RJ12) or an LTOP overvoltage protection module (for dedicated-line operation)	**6NH7810-0AA30**

	Article No.
Accessories	
Connecting cable For connecting a TIM with one of the SINAUT ST7 MD2, MD3 modems Cable length 1.5 m	
• RS 232	**6NH7701-4AL**
• RS 485 (not for TIM 3V-IE)	**6NH7701-4DL**
Line transformer with overvoltage protection (for dedicated line only)	
• **LTOP1** for 2-wire terminal	**6NH9821-0BC11**
Adapters For mounting the MD3 modem on a 35 mm standard mounting rail	**6NH7760-0AA**
SITOP compact 24 V/0.6 A 1-phase power supply with wide-range input 85 … 264 V AC/110 … 300 V DC, stabilized output voltage 24 V, rated output current value 0.6 A, slim design	**6EP1331-5BA00**

© Siemens AG 2014

Overview

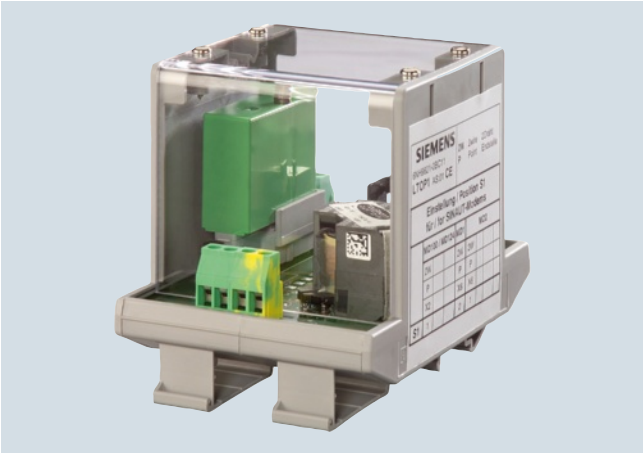

- Line transformer with overvoltage protection
- For electrical isolation of a dedicated line modem from the trunk line
- For protection against overvoltages that can be injected into a trunk line

Benefits

get Designed for Industry

- Reduces overvoltage to tolerable levels before they reach sensitive electronics circuits
- Electrically isolates line sections; prevents interference due to external voltages
- Limits damage to segments affected by overvoltage
- The protective components are housed in a plug-in OPM overvoltage module. The OPM can be replaced without interrupting the trunk line.

Application

Dedicated copper lines are susceptible to electromagnetic interference. The coupling of extraneous voltages can be inductive or capacitive, for example due to the effects of lightning. Direct conductive coupling is also possible due to bad insulation.

The LTOP overvoltage protection limits external voltage and overvoltage to a non-critical level. The floating transformer additionally provides electrical isolation, and the transfer of voltages to other cable sections are therefore prevented.

LTOP protects people and investments, and is therefore an essential safety element in private trunk line networks.

Note:
The LTOP modules are not suitable for protecting dial-up connections (telephone or ISDN network). Companies such as Phoenix and Dehn offer TAE6, S_0, RJ-12, and RJ-45 jacks with overvoltage protection.

Design

The protection concept consists of a combination of components that complement each other in terms of functionality:

- Surge arresters filled with noble gas as coarse protection (G1, G2)
- Inductance that limits the rise of the current (L1, L2)
- Metal-oxide varistor as surge protection (voltage-dependent resistor; R1)
- Translator for galvanic decoupling (T1)
- Suppressor diode for limiting the secondary voltage of the translator (V1)

The overvoltage protection module LTOP is available in two variants:

- **LTOP 1;**
  overvoltage protection module for use at the beginning or at the end of a 2-wire cable
- **LTOP 2;**
  overvoltage protection module for use at the beginning or at the end of a 4-wire cable or at a 2-wire grading point. At a 4-wire graded point, two LTOP2 units are needed.

Both LTOP variants feature screw-type terminals and an RJ12 Western jack. The WAN connecting cable (RJ12 - RJ12) that came with the MD2 and MD3 modems (used as dedicated line modem) can be connected directly to this RJ12 jack.

© Siemens AG 2014

Function

The combination of arresters and limiters supplemented by the line transformer is more effective than galvanically-coupled protection concepts.

Leakage voltages place considerable strain on protective components in the OPM, slowly destroying them beyond repair. We therefore recommend that OPMs are replaced approximately once a year. In areas affected by frequent thunderstorms, this should be reduced to approximately every 6 months as a precautionary measure.

Integration

If necessary, several LTOP enclosures can be interconnected.

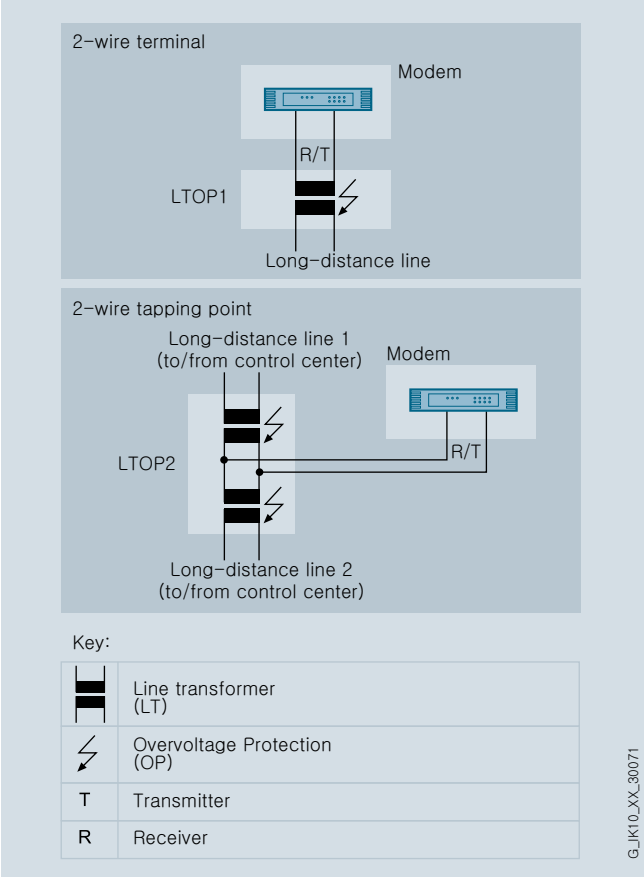

Configuration examples with LTOP

© Siemens AG 2014

Technical specifications

Article No.	**6NH9821-0BC11/6NH9821-0BC12**			
Product-type designation	**LTOP overvoltage protection**			
Transmission paths	Private non-coil-loaded or coil-loaded trunk lines			
Transmission ratio	1 : 1; ± 5% (e.g. 600/600 ohms in voice band)			
Transfer range	300 Hz ... 35 kHz			
Frequency-dependent attenuation	Attenuation [dB]	Frequency [Hz]	Transmission rate [bps]	
			MD2	MD3
	0.2	1 300 ... 3 300	1 200 2 400	all
	1.0	20 800 ... 30 600	9 600 19 200	
Insulation resistance	> 2 000 MOhms			
Test voltage	4 kV, 50 Hz, 10 sec			
Impulse withstand voltage	6 kV/2 J acc. to EN 60 099-1			
Rated discharge current i_{sn} (8/20 µs)	5 kA			
Output voltage limit at i_{sn}	approx. 15 V			
Trunk line connection	Screw terminals Cross-section 0.2 – 4 mm^2 with rigid cores Cross-section 0.2 – 2.5 mm^2 with flexible cores			
Modem connection	Screw terminals (wire cross-section see trunk line connection) or RJ12 socket for Western connector			
Installation location	As near as possible to where the cable enters the building			
Perm. ambient conditions				
• Operating temperature	0 °C ... +60 °C			
• Transport/storage temperature	-40 °C ... +70 °C			
• Relative humidity	Max. 95% at +25 °C			
Construction				
• Dimensions (W x H x D) in mm	90 x 75 x 110 mm			
• Weight				
- LTOP1	300 g			
- LTOP2	320 g			
- OPM	10 g			
Degree of protection	IP20			
Installation	DIN rail TS35 (35 mm; EN 50 022)			

Ordering data

	Article No.
LTOP 1 overvoltage protection Single line transformer, with one OPM overvoltage protection module for use at the start or end of a 2-wire line	**6NH9821-0BC11**
LTOP 2 overvoltage protection 2-way line transformer with two overvoltage protection modules (OPM) for use at the beginning or at the end of a 4-wire cable or at a 2-wire grading point.	**6NH9821-0BC12**
Accessories	
OPM Overvoltage protection module for LTOP1 and LTOP2, plug-in (pack of 4)	**6NH9821-0BB00**

© Siemens AG 2014

ANT794-4MR 2G / 3G / 4G antenna

Overview

- Omnidirectional antenna for use in GSM/GPRS/UMTS/LTE networks
- Remote antenna for indoors/outdoors
- Suitable for quad band
- Complete with cable and mounting bracket for direct connection to SINAUT GPRS modems

Benefits

get Designed for Industry

- Weatherproof design allows installation outside buildings to improve the field strength
- Quad band technology permits international use

Application

- For use in GSM/GPRS/UMTS/LTE networks
- For indoors/outdoors (IP65 degree of protection)
- Operating temperature -40 °C to 70°C

Design

- Radiator accommodated in a plastic tube for protection
- RF cable with fixed connection to antenna
- Fixed and rugged vertical installation outside control cabinet

Technical specifications

Article No.	**6NH9860-1AA00**
Product-type designation	**ANT794-4MR antenna**
Wireless frequencies	
Type of mobile wireless network is supported	
• GSM	Yes
• UMTS	Yes
• LTE	Yes
Operating frequency	
• 800 MHz (LTE)	Yes
• 850 MHz	Yes
• 900 MHz	Yes
• 1 800 MHz	Yes
• 1 900 MHz	Yes
• 2 200 MHz	Yes
• 2 600 MHz (LTE)	Yes
Electrical data	
Radiation characteristic	omnidirectional
Antenna gain	0 dB
Standing wave ratio VSWR maximum	2
Number of electrical connections of antenna	1
Design of electrical connection of antenna	SMA connector
Front-to-back ratio	-
Transmit power maximum	20 W
Permitted ambient conditions	
Ambient temperature during operating	-40 … +70 °C
Protection class IP	IP65
Design, dimensions and weight	
Width	24 mm
Height	193 mm
Depth	24 mm
Diameter	24 mm
Net weight	310 g
Type of mounting	
Cable length of antenna cable	5 m
Product properties, functions, components general	
Material of outer shell	Hard PVC, UV-resistant

© Siemens AG 2014

Ordering data

	Article No.
GSM/GPRS antenna	
ANT794-4MR antenna Omnidirectional antenna for GSM (2G), UMTS (3G) and LTE (4G) networks; weather-resistant for indoor and outdoor use; 5 m cable with fixed connection to antenna; SMA connector; including mounting bracket, screws, wall plugs	**6NH9860-1AA00**

Dimensional drawings

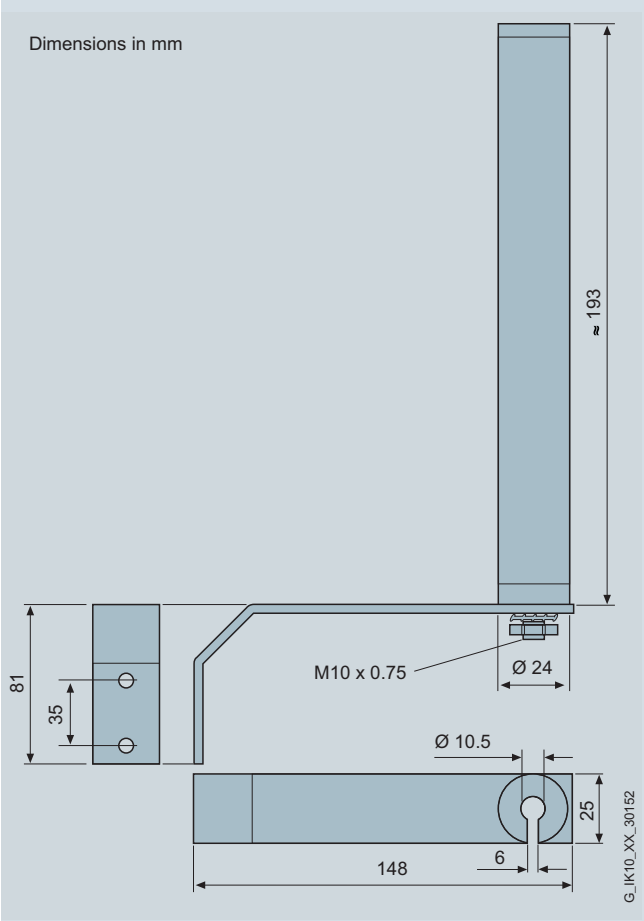

More information

Selection tools:

To assist in selecting the right Industrial Wireless Communication, the SIMATIC NET Selection Tool is available at:

SIMATIC NET Selection Tool:

- Online version:
  http://www.siemens.com/snst
- Offline version
  http://www.siemens.com/snst-download

Wireless approvals:

Current approvals can be found on the Internet at:
http://www.siemens.com/mobilenetwork-approvals

© Siemens AG 2014

ANT794-3M GSM/GPRS antenna

Overview

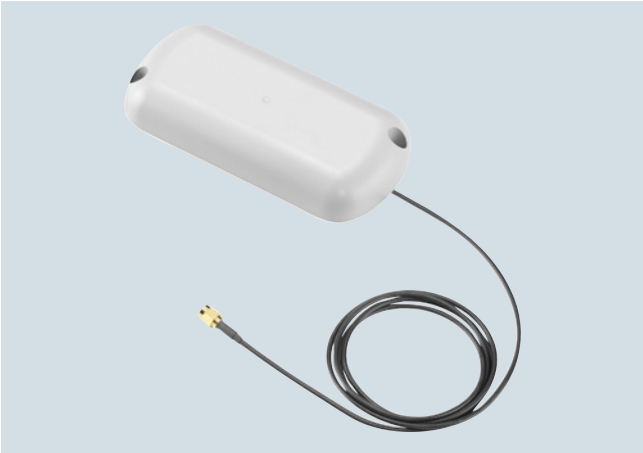

- Flat panel antenna for mobile telephony for GSM 900/1 800/1 900
- Suitable for exterior and interior installation
- Electrically independent installation
- Ready for connection with cable for GSM/GPRS modems with SMA connection

Benefits

get Designed for Industry

- Durable mounting in plastic switching boxes
- Installation without specialist knowledge of high frequency
- Universal in use, also on grounded or non-grounded metal surfaces without adversely affecting the radiation properties

Application

- For use in GSM/GPRS networks
- Indoors and outdoors (IP64 degree of protection)
- Operating temperature –40 °C to +70 °C
- For installation in plastic control boxes

Design

- Emitters accommodated in protective plastic housing
- Installation using screws or adhesive pad

Technical specifications

Article No.	**6NH9870-1AA00**
Product-type designation	**ANT794-3M antenna**
Wireless frequencies	
Type of mobile wireless network is supported	
• GSM	Yes
• UMTS	No
Operating frequency	
• 850 MHz	No
• 900 MHz	Yes
• 1 800 MHz	Yes
• 1 900 MHz	Yes
• 2 200 MHz	No
Electrical data	
Radiation characteristic	directional
Antenna gain	0 dB
Standing wave ratio VSWR maximum	1.5
Number of electrical connections of antenna	1
Design of electrical connection of antenna	SMA connector
Front-to-back ratio	-
Transmit power maximum	10 W
Permitted ambient conditions	
Ambient temperature during operating	-40 … +75 °C
Protection class IP	IP64
Design, dimensions and weight	
Width	70.5 mm
Height	20.5 mm
Depth	146.5 mm
Diameter	-
Net weight	130 g
Mounting type	screw fixing
Cable length of antenna cable	1.2 m
Product properties, functions, components general	
Material of outer shell	ABS Polylac PA-765, light gray (RAL 7035)

© Siemens AG 2014

Ordering data

	Article No.
GSM/GPRS antenna	
ANT794-3M antenna Flat panel antenna for GSM (2G) networks, for triband with 900/1 800/1 900 MHz; weather-resistant for indoor/outdoor use, 1.2 m cable with fixed connection to antenna; SMA connector, incl. assembly adhesive tape	**6NH9870-1AA00**

Dimensional drawings

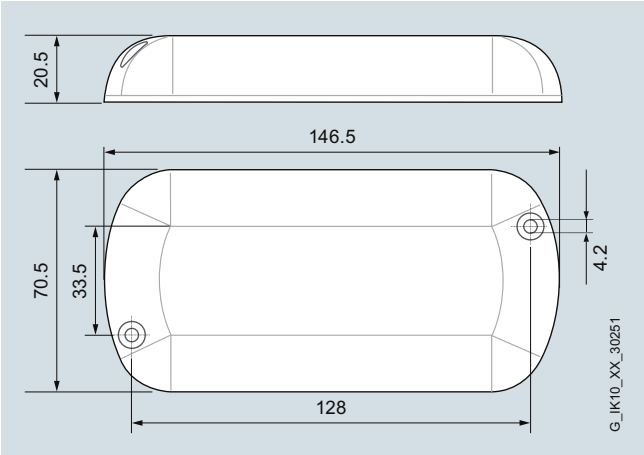

More information

Selection tools:

To assist in selecting the right Industrial Wireless Communication, the SIMATIC NET Selection Tool is available at:

SIMATIC NET Selection Tool:

- Online version:
  http://www.siemens.com/snst
- Offline version:
  http://www.siemens.com/snst-download

Radio approvals

Current approvals can be found on the Internet at:
http://www.siemens.com/mobilenetwork-approvals

© Siemens AG 2014

PPI modem cable

Overview

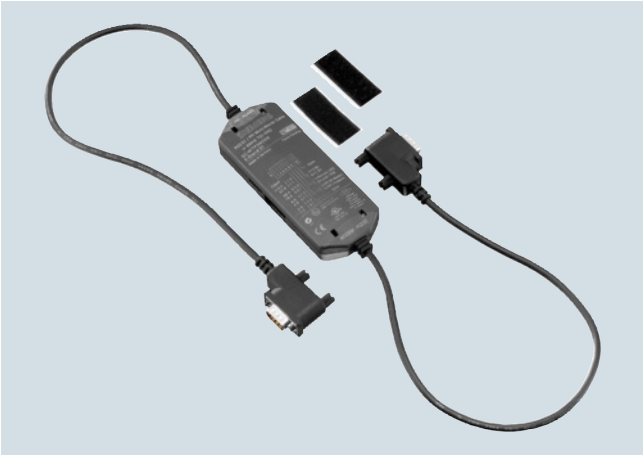

- Intelligent RS 232/PPI multimaster cable for connecting modems with RS 232 interface to SIMATIC S7-200 (RS 485)

Benefits

get Designed for Industry

- Matching cable length for control cabinet assembly
- No RS 232 adapter (gender changer) required for modem connection
- Simple fixing of cable in control cabinet using Velcro fastener

Application

The intelligent RS 232/PPI multimaster cable can be used for the connection between modems and the S7-200. It is then possible to connect modems such as the GSM modem MD720-3 with RS 232 interface to the PPI interface of the S7-200 without using a gender changer. As a result of the short cable lengths and the industrial Velcro fasteners, the PPI modem cable is suitable for use in control cabinets.

Design

- 24 V DC power supply via the RS 485 interface of the SIMATIC S7-200
- Three LEDs for status display:
  - Tx, green: RS 232 send
  - Rx, green: RS 232 receive
  - PPI, green: RS 485 send

Function

PPI mode:

- Signal conversion from RS 232 to RS 485
- Control of token in a multimaster PPI network (PPI master)
- Supports 10-bit modem protocol via RS 232, and DPT and PPI protocols via RS 485

Freeport mode:

- Signal conversion from RS 232 to RS 485
- Switchover between local and remote modes
- Configuration in local mode using DIP switches
- Configuration in remote mode using terminal program (e.g. MS Hyper Terminal)
- Supports AT modem commands and PIN for Siemens modems

Technical specifications

Article No.	**6NH9701-0AD**
Product-type designation	**PPI modem cable**
Acceptability for application	For connecting modems (MD720-3) to S7-200
Cable length	1.1 m
Mechanical data	
Net weight	0.3 kg

Ordering data

	Article No.
PPI modem cable For connecting modems with RS 232 interface to SIMATIC S7-200	**6NH9701-0AD**

© Siemens AG 2014

Overview

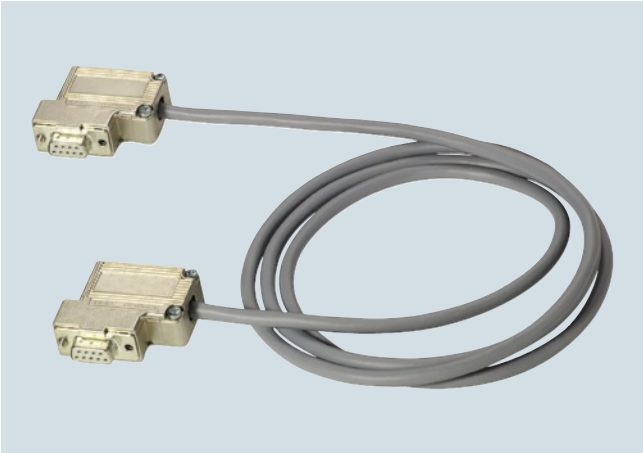

There is a series of standard connecting cables for connecting the SINAUT components to one another or to the respective WAN. Some of these cables are already supplied as a permanent item along with the hardware components and are listed in the ordering data of these components as spare parts.

Technical specifications

Article No.	**6NH7701-4AL**	**6NH7701-4DL**	**6NH7701-1CB**	**6NH7701-5AN**
Product-type designation	**Connecting cable SINAUT ST7, CC 701-4A**	**Connecting cable SINAUT ST7, CC 701-4D**	**Connecting cable SINAUT ST7, CC 701-1C**	**Connecting cable SINAUT ST7, CC 701-5A**
Acceptability for application	For connecting a TIM to a SINAUT ST7 modem (MD2, MD3, MD4) over an RS232 interface	For connecting a TIM to a SINAUT ST7 modem (MD2, MD3, MD4) over an RS4852 interface	For connecting two MD2 modems over an RS232 interface to create a repeater	For connecting a TIM to the GSM Modem MC45T or MD720 via the RS232 interface
Cable length	1.5 m	1.5 m	0.3 m	2.5 m
Mechanical data				
Net weight	-	-	-	-

Article No.	**6NH7701-4BN**	**6NH7701-0AR**
Product-type designation	**Connecting cable SINAUT ST7, CC 701-4B**	**Connecting cable SINAUT ST7, CC 701-0A**
Acceptability for application	For connecting a TIM with a third-party modem or radio unit over an RS232 interface, one free end	For connecting two TIM modules via an RS232 interface without modems
Cable length	2.5 m	6 m
Mechanical data		
Net weight	-	-

© Siemens AG 2014

Ordering data

	Article No.
Connecting cable For connecting a TIM with a SINAUT ST7 MD2, MD3 or MD4 modem; cable length 1.5 m	
• RS 232 Also suitable for interfacing the modems listed with a SIMATIC point-to-point CP such as the CP340, CP341 or CP441 with RS 232 interface	**6NH7701-4AL**
• RS 485	**6NH7701-4DL**
Connecting cable For connecting two MD2 modems (RS 232) in order to create a repeater; cable length 0.3 m	**6NH7701-1CB**

	Article No.
Connecting cable For connecting a TIM (RS 232) with the GSM modem MD720-3; also suitable for third-party modems or radio equipment with standard RS 232 interface; cable length 2.5 m	**6NH7701-5AN**
Connecting cable open at one end For connecting a TIM (RS 232) with a third-party modem or radio unit (RS 232); cable length 2.5 m	**6NH7701-4BN**
Test cable Connecting cable for connecting two TIMs via their RS 232 interface without modems ("null modem"); cable length 6 m	**6NH7701-0AR**