Compendium

Edition: AH

simovert masterdrives

Motion Control

SIEMENS

Промэлектроника, sales@prom-elec.com

For **START-UP** of the unit, please refer to Section 3 "First Start up" in the **operating instructions** supplied with the inverters/converters.

In the following, we would like to give you some tips on how to proceed further and how to use the **COMPENDIUM** for detailed **PARAMETERIZATION** of the units.

Preparatory measures for detailed parameterization

☞ Make yourself familiar with the **connection diagrams of the power and control terminals**: You can find these in the **operating instructions** for the units and options in the section "Connecting-up" (in the case of optional boards, consult the "Description" section as well). The operating instructions are supplied with the units.

☞ Make yourself familiar with the **basic functions of the units** (brief introduction): see the following sections in this **Compendium**:

- Section 4: "**Function blocks and parameters**“ (blocks, connectors, binectors, parameters, data sets, BICO system)
- Sections 5.1 to 5.3: "**Parameterization**“ (parameter menus, operator control and displays on the PMU (operator control panel)) (Section 5.4 "Parameter input via the OP1S“ only if necessary)

DETAILED PARAMETERIZATION (COMPENDIUM):

GENERAL TIPS

- The units can be parameterized with the PMU / OP1S (operator control panels) or with a PC and the SIMOVIS/DriveMonitor software package.
- If you need more detailed information about specific parameters, connectors or binectors, you can find a "**parameter list**", with a **connector and binector list** added onto the end, plus an overview of the **data-set parameters** (assignment of the indices) in the appendix (Volume 2) of the Compendium.
  (Please note the "Explanations" at the beginning of the parameter list!)
  These lists can be used as a **reference whenever necessary.**
- If faults or alarms occur during start-up (Fxxx , Axxx), you can find detailed descriptions of them in the appendix (Volume 2) under "**Faults and Alarms**“.
- The units are delivered with their **factory setting**.
  If you want to restore the factory setting in the case of a repeat start-up, incorrect inputs or a change between the type of start-up indicated below (Sections 1.), 2.) and 3.)), this can be done at any time with the function described in Section 6.1, "**Parameter reset to factory setting**“.
  (**Abbreviated instructions:** P053 = 6 > P060 = 2 > P970 = 0)

The following are the different types of start-up. In the annex, there are some tips on information to be found in the internet.

1.) Paramterization of the basic unit during initial start-up

2.) Parameterization of the F01 technology option (if present) during initial start-up

3.) Parameterization of the unit by means of downloading if data backup is provided

- **Annex (tips on information in the internet)**

1.) Parameterization of the basic unit during initial start-up

Choose the method of start-up you require:

1.1) Initial start-up:

a.) Quick parameterization
(QUICK standard start-up in order to quickly "turn" the motor for the first time, for example, and to test its basic functioning)
- See Section 6.3.3.

b.) "Menu-guided start-up“ with PC / SIMOVIS/DriveMonitor
(QUICK standard start-up in order to quickly "turn" the motor for the first time, for example, and to test its basic functioning)
- See SIMOVIS/DriveMonitor (menu: " Parameters“ > submenu: "Menu-guided start-up")

c.) Detailed parameterization
- See Section 6.2
- After completing parameterization in accordance with Section 6.2, you can use the following setting to start the drive immediately and test it: (precondition: P366 = 0 (STANDARD)):
  - P554.i1 = 10 ; P555.i1 = 10:
    The drive can be switched ON and OFF (coast to stop without electrical braking torque) by means of terminal –X101 / 3.
  - P443.i1 = 41; P462.i1 = 3 sec; P464.i1 = 3 sec; (as long as V/f characteristic has first been selected with P290 = 1: P320.i1 = 75): the setpoint can thus be specified in % by means of P401.i1 (ramp-up/ramp-down times = 3 sec).

For further parameterization, see the following "Notes on how to proceed further".

Notes on how to proceed further

☞ You should always **refer to the function diagrams first (graphic illustration of functions)** before carrying out **further parameterization** (process data (control values, setpoints and actual values), functions etc.) or **diagnosis**.
They can be found in the appendix (Volume 2) of the Compendium.

The function diagrams are subdivided into those for basic functions, free function blocks, supplementary boards (EBx, SCBx) and the F01 technology option.

Use the list of contents (at the beginning of the function diagrams) to look for functions.

First read the following pages:

- **Basic functions**:
  "General“: Pages [10], [12], [15], [20], [30]
  "Diagnostics“: Pages [510], [515]
  "Functions“: Pages [540], [550]
- **Free function blocks** (if used):
  "Sampling times, sampling sequence“: Page [702]
  (see also Section 7.1: "Functions / Basic functions")
- **Control word** commands and **status word** messages:
  In addition to the function diagrams (pages [180], [190], [200], [210]), you can find detailed descriptions of the individual commands /messages in Section 10, "Process data".
- **Interfaces** (USS, PROFIBUS, SIMOLINK, CAN):
  In addition to the function diagrams, you can find detailed descriptions of the interface functions in Section 8, "Communication".

2.) Parameterization of the F01 technology option (if present) during initial start-up

After completing "parameterization of the basic unit during initial start-up" (Point 1), you can parameterize the F01 technology option.

First read the sections you need for your application in **Section 9 "Technology F01"** of the Compendium and, at the same time, refer to the **function diagrams for the F01 technology option** in the appendix (Volume 2) of the Compendium.

Please pay special attention to pages [799], [800], [802] and [850] in the **function diagrams for the F01 technology option**.

If you are interested in more detailed information on the technology functions (especially if SIMATIC S7 / GMC-BASIC / GMC-OP_OAM / M7 are used), you can find relevant details in the "Motion Control planning package for MASTERDRIVES MC and SIMATIC S7" (manual / CD-ROM can be ordered separately).
Here, you can also find detailed descriptions of the technology-specific fault messages of the unit for job management, AUTOMATIC BLOCK (U591), and the GMC-FBs) in "Appendix A".

3.) Parameterization of the unit by means of downloading if data backup is provided:

The parameter settings to be entered for your application are available, stored in the OP1S or as a SIMOVIS/DriveMonitor file.

3.1) Start-up if data protection provided:

a.) Parameter set stored in the OP1S:
Download by means of OP1S
- See Sections 6.3.2 and 5.4

b.) Parameter set available as a SIMOVIS/DriveMonitor file:
Download by means of SIMOVIS/DriveMonitor
- See Section 6.3.2 or on-line help of SIMOVIS/DriveMonitor

♦ **ANNEX (tips on information in the internet):**

Information and software in the INTERNET relating to SIMOVERT MASTERDRIVES:

- In the INTERNET, you can find the following: software releases (DOWNLOAD of current firmware for the units), additions and alterations to the manuals / Compendium, frequently asked questions, service contact points, a HOTLINE and so on.

  Contents located under:
  SIEMENS / Products & Solutions / Product index / Variable-speed drives /
  MASTERDRIVES MC / contact partner / A&D Automation and Drives /
  Support, Training & Services / Customer Support / Variable-Speed drive Systems

Definitions and Warnings

Qualified personnel

For the purpose of this documentation and the product warning labels, a "Qualified person" is someone who is familiar with the installation, mounting, start-up, operation and maintenance of the product. He or she must have the following qualifications:

- Trained or authorized to energize, de-energize, ground and tag circuits and equipment in accordance with established safety procedures.
- Trained or authorized in the proper care and use of protective equipment in accordance with established safety procedures.
- Trained in rendering first aid.

DANGER

indicates an **imminently** hazardous situation which, if not avoided, will result in death, serious injury and considerable damage to property.

WARNING

indicates a **potentially** hazardous situation which, if not avoided, could result in death, serious injury and considerable damage to property.

CAUTION

used with the safety alert symbol indicates a potentially hazardous situation which, if not avoided, may result in minor or moderate injury.

CAUTION

used without safety alert symbol indicates a potentially hazardous situation which, if not avoided, may result in property damage.

NOTICE

NOTICE used without the safety alert symbol indicates a potential situation which, if not avoided, may result in an undesireable result or state.

NOTE

For the purpose of this documentation, "Note" indicates important information about the product or about the respective part of the documentation which is essential to highlight.

WARNING

Hazardous voltages are present in this electrical equipment during operation.

Non-observance of the warnings can thus result in severe personal injury or property damage.

Only qualified personnel should work on or around the equipment

This personnel must be thoroughly familiar with all warning and maintenance procedures contained in this documentation.

The successful and safe operation of this equipment is dependent on correct transport, proper storage and installation as well as careful operation and maintenance.

NOTE

This documentation does not purport to cover all details on all types of the product, nor to provide for every possible contingency to be met in connection with installation, operation or maintenance.

Should further information be desired or should particular problems arise which are not covered sufficiently for the purchaser's purposes, the matter should be referred to the local SIEMENS sales office.

The contents of this documentation shall not become part of or modify any prior or existing agreement, commitment or relationship. The sales contract contains the entire obligation of SIEMENS AG. The warranty contained in the contract between the parties is the sole warranty of SIEMENS AG. Any statements contained herein do not create new warranties or modify the existing warranty.

SIEMENS

SIMOVERT MASTERDRIVES

MOTION CONTROL

Compendium

in Volume 1

- System Description
- Configuration and Connection Examples
- Instructions for Design of Drives in Conformance with EMC Regulations
- Function Blocks and Parameters
- Parameterization
- Parameterizing Steps
- Functions
- Communication
- Technology Option F01
- Process Data
- Engineering Information

in Volume 2

- Function Diagrams
- Parameter Lists
- Faults and Alarms
- Lists of Stored Motors
  Dimension Drawings

Version AH

6SE7087-6QX50

Contents

1 SYSTEM DESCRIPTION 1-1

1.1 Overview 1-1

1.2 System Description 1-2

1.3 Construction Sizes 1-3

1.4 Communication 1-4

2 CONFIGURATION AND CONNECTION EXAMPLES 2-1

2.1 Compact PLUS type units 2-1
2.1.1 Single-axis drive 2-1
2.1.2 Multi-axis drive up to 3 axes 2-1
2.1.3 Multi-axis drive 2-2
2.1.4 Configuration and Connection Examples (Compact PLUS) 2-5

2.2 Compact and chassis-type units 2-9
2.2.1 Water-cooled units 2-9
2.2.2 Single-axis drive with Compact or chassis-type units 2-9
2.2.3 Multi-axis drive with Compact or chassis-type units 2-9
2.2.4 Explanations relating to the configuration examples (Compact and chassis-type units) 2-13

2.3 Points to look out for when using certain option boards and CUMC 2-16
2.3.1 Encoder interface connections 2-16
2.3.2 TB boards 2-17
2.3.3 EB boards 2-18
2.3.4 CUMC 2-18

3 INSTRUCTIONS FOR DESIGN OF DRIVES IN CONFORMANCE WITH EMC REGULATIONS 3-1

3.1 Foreword 3-1

3.2 Principles of EMC 3-2
3.2.1 What is EMC? 3-2
3.2.2 Noise emission and noise immunity 3-2
3.2.3 Industrial and domestic applications 3-3
3.2.4 Non-grounded systems 3-3

3.3 The frequency converter and its electromagnetic compatibility 3-4
3.3.1 The frequency converter as a noise source 3-4
3.3.2 The frequency converter as a noise receiver 3-7

3.4 EMC planning ... 3-8
3.4.1 The zone concept ... 3-10
3.4.2 Use of filters and coupling elements ... 3-12

3.5 Design of drives in conformance with EMC regulations ... 3-13
3.5.1 Basic EMC rules ... 3-13
3.5.2 Examples ... 3-19

3.6 Assignment of SIMOVERT MASTERDRIVES, radio interference suppression filters and line reactors ... 3-26

3.7 Specified standards ... 3-26

4 FUNCTION BLOCKS AND PARAMETERS ... 4-1

4.1 Function blocks ... 4-1

4.2 Connectors and binectors ... 4-2

4.3 Parameters ... 4-4

4.4 Connecting up function blocks (BICO system) ... 4-8

5 PARAMETERIZATION ... 5-1

5.1 Parameter menus ... 5-1

5.2 Changeability of parameters ... 5-5

5.3 Parameter input via the PMU ... 5-6

5.4 Parameter input via the OP1S ... 5-11
5.4.1 General ... 5-11
5.4.2 Connecting, run-up ... 5-13
5.4.2.1 Connecting ... 5-13
5.4.2.2 Run-up ... 5-14
5.4.3 Operator control ... 5-16
5.4.3.1 Operator control elements ... 5-16
5.4.3.2 Operating display ... 5-17
5.4.3.3 Basic menu ... 5-18
5.4.3.4 Slave ID ... 5-19
5.4.3.5 OP: Upread ... 5-20
5.4.3.6 OP: Download ... 5-21
5.4.3.7 Delete data ... 5-22
5.4.3.8 Menu selection ... 5-23
5.4.3.9 Issuing commands via the OP1S ... 5-29
5.4.4 Bus operation ... 5-30
5.4.4.1 Configuring slaves ... 5-30
5.4.4.2 Changing slaves ... 5-31
5.4.5 Technical data ... 5-31

5.5 Parameter input with SIMOVIS / DriveMonitor 5-32
5.5.1 Installation and connection 5-32
5.5.1.1 Installation 5-32
5.5.1.2 Connection 5-32
5.5.2 Bus configuration (SIMOVIS) 5-33
5.5.2.1 Creating a project 5-33
5.5.2.2 Setting the interface 5-34
5.5.2.3 Selecting a device 5-35
5.5.2.4 Testing the connection 5-37
5.5.3 Drive configuration DriveMonitor 5-38
5.5.3.1 Setting the interface 5-38
5.5.3.2 Drive settings 5-39
5.5.4 Parameterization 5-42
5.5.4.1 Calling up the drive window (SIMOVIS) 5-42
5.5.4.2 Drive window 5-42
5.5.4.3 Operating modes 5-44
5.5.4.4 Parameterization options (Menu Parameter) 5-45
5.5.4.5 Structure of the parameter lists, parameterization with SIMOVIS / DriveMonitor 5-48
5.5.5 Operation with USS 5-49
5.5.5.1 Requirements 5-49
5.5.5.2 Operating functions 5-51
5.5.6 Service functions 5-53
5.5.6.1 Upread (Upload) / download 5-53
5.5.6.2 Script files 5-54
5.5.6.3 Trace 5-60
5.5.6.4 Diagnostic menu 5-66
5.5.6.5 Menu prompted start-up 5-66
5.5.6.6 Learning a database 5-70

6 PARAMETERIZING STEPS 6-1

6.1 Parameter reset to factory setting 6-3

6.2 Detailed parameterization 6-5
6.2.1 Power section definition 6-5
6.2.2 Board configuration 6-8
6.2.3 Drive setting 6-12
6.2.4 Motor identification 6-19
6.2.5 Function adjustment 6-19

6.3 Quick parameterization procedures 6-20
6.3.1 Parameterizing with user settings 6-20
6.3.2 Parameterizing by loading parameter files (download P060 = 6) 6-21
6.3.3 Parameterizing with parameter modules (quick parameterization, P060 = 3) 6-24

7 FUNCTIONS 7-1

7.1 Basic functions 7-1
7.1.1 Time slots 7-1
7.1.1.1 Time slots T0 to T20 7-1
7.1.1.2 Processing sequence 7-3
7.1.1.3 Assignment of function blocks to time slots 7-4
7.1.2 Processing sequence of the function blocks 7-6
7.1.2.1 Time monitoring 7-7
7.1.2.2 Influencing the time response 7-8

7.2 Technology functions 7-9
7.2.1 Comfort ramp-function generator 7-9
7.2.2 Technology controller 7-10
7.2.3 Basic positioning 7-11
7.2.3.1 Functions 7-15
7.2.3.2 Normalization 7-23
7.2.3.3 Operating modes 7-26
7.2.3.4 Preprocessing of position setpoint 7-41
7.2.3.5 Application example 7-43
7.2.3.6 Change history 7-46

7.3 Converter functions 7-47
7.3.1 Friction characteristic function (function diagram 399) 7-47
7.3.1.1 Friction characteristic 7-47
7.3.1.2 Friction characteristic recording (automatic procedure) 7-47
7.3.2 Torque constant adaptation for synchronous motors (function diagram 393) 7-49
7.3.3 Tr adaptation function (function diagram 394) 7-51
7.3.4 Position test function 7-52
7.3.5 Function "PRBS signal with recording" (function diagram 796) 7-55
7.3.6 Function "speed filter" (function diagram 361) 7-57
7.3.7 "Speed controller characteristic" function (function diagram 360) 7-61

7.4 Special functions 7-62
7.4.1 Loading firmware 7-62

8 COMMUNICATION 8-1

8.1 Universal Serial Interface (USS) 8.1-1
8.1.1 Protocol specification and bus structure 8.1-2
8.1.1.1 Protocol specification 8.1-2
8.1.1.2 Bus structure 8.1-7
8.1.2 The structure of net data 8.1-10
8.1.2.1 General structure of the net-data block 8.1-10
8.1.2.2 PKW area 8.1-11
8.1.2.3 Process-data area (PZD) 8.1-19
8.1.3 Interface overview 8.1-20
8.1.4 Connecting-up 8.1-23
8.1.4.1 Bus cable connection 8.1-23
8.1.4.2 Fitting the bus cable 8.1-24
8.1.4.3 EMC measures 8.1-25
8.1.4.4 Bus termination, USS protocol 8.1-28
8.1.5 Start-up 8.1-31
8.1.5.1 Parameterization of the USS protocol (1st step) 8.1-32
8.1.5.2 Parameterizing the parameterizing enable and process-data interconnections (2nd step) 8.1-36

8.2 PROFIBUS 8.2-1
8.2.1 Product description of the CBP communications board 8.2-1
8.2.2 Description of the CBP's functions on the PROFIBUS-DP 8.2-3
8.2.2.1 Cyclical data transmission 8.2-5
8.2.2.2 Acyclical data transfer 8.2-10
8.2.2.3 Acyclical master class 1, automation (PLC) 8.2-12
8.2.2.4 Acyclical master class 2 - Configuration (DriveES) 8.2-16
8.2.2.5 Acyclical master class 2 - Operator control (SIMATIC OP) 8.2-17
8.2.3 Mechanisms for processing parameters via the PROFIBUS 8.2-18
8.2.4 PROFIdrive V3: Acyclic parameter accessing with data block 47 ..... 8.2-25
8.2.4.1 Comparison between parameter tasks to PROFIdrive version 2 and 3 ..... 8.2-27
8.2.4.2 Example of "Request parameter value", simple 8.2-28
8.2.4.3 Example of "Change parameter value", simple 8.2-29
8.2.4.4 Example of "Request parameter value", more than one array element 8.2-30
8.2.4.5 Example of "Change parameter value", more than one array element 8.2-31
8.2.4.6 Example of "Request parameter value", multi-parameter 8.2-32
8.2.4.7 Example of "Change parameter value", multi-parameter 8.2-34
8.2.4.8 Request description, individual 8.2-36
8.2.4.9 Request description, total 8.2-37
8.2.4.10 Request text, individual 8.2-38
8.2.5 Mounting methods / CBP slots 8.2-39
8.2.5.1 CBP mounting slots in MC Compact PLUS units 8.2-39
8.2.5.2 CBP slots in Compact units and chassis-type units with the CUs of function classes Motion Control (CUMC) and Vector Control (CUVC) 8.2-40
8.2.5.3 CBP slots in Compact and chassis-type units with the CUs of function classes FC (CU1), VC (CU2) or SC (CU3) 8.2-42
8.2.6 Connecting up the CBP to the PROFIBUS 8.2-43
8.2.6.1 Assignment of plug-in connector X448 ..... 8.2-43
8.2.6.2 Connecting up the bus cable by means of the RS485 bus connecting system 8.2-43
8.2.6.3 Connecting the bus cable with the fiber-optic cable system 8.2-47
8.2.6.4 Shielding of the bus cable / EMC measures 8.2-49

8.2.7	Starting up the CBP	8.2-52
8.2.7.1	Basic parameterization	8.2-52
8.2.7.2	Process data interconnection in the units	8.2-57
8.2.7.3	Process data interconnection via standard telegrams	8.2-64
8.2.7.4	Process data monitoring	8.2-66
8.2.8	Settings for the PROFIBUS-DP master (Class 1)	8.2-68
8.2.8.1	Operating the CBP with a SIMATIC S5	8.2-70
8.2.8.2	Operating the CBP with a SIMATIC S7	8.2-72
8.2.8.3	Operating the CBP with a non-Siemens system	8.2-74
8.2.8.4	Operating the CBP2 with extended functions with a SIMATIC S7	8.2-75
8.2.8.5	CBP2 with cross traffic operated with a SIMATIC S7	8.2-76
8.2.8.6	CBP2 with clock synchronization operated with a SIMATIC S7	8.2-78
8.2.8.7	CBP2 with clock synchronization on a PROFIBUS master in accordance with PROFIdrive V3	8.2-81
8.2.9	MASTERDRIVES as PROFIdrive V3-Slave	8.2-83
8.2.9.1	Incorporation of drives in automation systems / plant characterization	8.2-85
8.2.9.2	Communication model	8.2-89
8.2.9.3	Drive control	8.2-90
8.2.9.4	Checkback messages (status words)	8.2-91
8.2.9.5	Setpoints / Actual values	8.2-92
8.2.9.6	Dynamic Servo Control (DSC)	8.2-93
8.2.9.7	Communication interface	8.2-101
8.2.9.8	Clock synchronous application	8.2-101
8.2.9.9	Encoder interface (from SW 1.6)	8.2-102
8.2.10	Diagnosis and troubleshooting	8.2-112
8.2.10.1	Evaluating the possibilities of hardware diagnosis	8.2-112
8.2.10.2	Fault and alarm display on the basic unit	8.2-114
8.2.10.3	Evaluating CBP diagnostic parameters	8.2-117
8.2.10.4	Meaning of information in the CBP diagnostic channel	8.2-120
8.2.10.5	Additional methods of diagnosis for start-up personnel	8.2-124
8.2.10.6	CBP2 diagnostic parameters	8.2-130
8.2.10.7	Special CBP2 diagnosis for start-up personnel	8.2-133
8.2.11	Appendix	8.2-136
8.3	SIMOLINK	8.3-1
8.3.1	General principles	8.3-1
8.3.2	Peer-to-peer functionality	8.3-5
8.3.3	Application with peer-to-peer functionality	8.3-6
8.3.4	Components of the peer-to-peer functionality	8.3-8
8.3.5	Parameterization of the peer-to-peer functionality	8.3-10
8.3.6	Diagnostics of the peer-to-peer functionality	8.3-14
8.3.7	Synchronization of the control circuits by means of the bus cycle time (MC only)	8.3-16
8.3.8	Synchronization diagnostics (MC only)	8.3-18
8.3.9	Switchover of the synchronization source (MC only)	8.3-18
8.3.10	Special data and application flags	8.3-20
8.3.11	Configuration (example of peer-to-peer functionality)	8.3-21
8.3.12	Master/slave functionality	8.3-25
8.3.13	Application with master/slave functionality	8.3-26

8.4 CBC Communications Board 8.4-1
8.4.1 Product description 8.4-1
8.4.2 Mounting methods / CBC slots 8.4-4
8.4.2.1 Mounting positions of the CBC in MC Compact PLUS units 8.4-4
8.4.2.2 Mounting positions of the CBC in Compact and chassis units of function classes MC (CUMC) and VC (CUVC) 8.4-5
8.4.2.3 Mounting positions of the CBC in Compact type and chassis type units with the CU of the function classes FC (CU1), VC (CU2) or SC (CU3) 8.4-6
8.4.2.4 Mounting positions of the CBC in VC Compact PLUS units 8.4-7
8.4.3 Connecting 8.4-8
8.4.3.1 Connection of the bus cable 8.4-9
8.4.3.2 EMC measures 8.4-10
8.4.3.3 Bus termination of the CAN bus (jumper S1.2) 8.4-13
8.4.3.4 Ground connection (jumper S1.1) 8.4-13
8.4.3.5 Interface X458 / X459 with jumper strip S1 ..... 8.4-14
8.4.3.6 Recommended circuits 8.4-15
8.4.4 Data transfer via the CAN bus 8.4-16
8.4.4.1 General 8.4-16
8.4.4.2 Parameter area (PKW) 8.4-17
8.4.4.3 Process data area (PZD) 8.4-24
8.4.5 Start-up of the CBC 8.4-31
8.4.5.1 Basic parameterization of the units 8.4-32
8.4.5.2 Process-data softwiring in the units 8.4-45
8.4.6 Diagnosis and troubleshooting 8.4-52
8.4.6.1 Evaluation of hardware diagnostics 8.4-52
8.4.6.2 Fault displays and alarms on the basic unit 8.4-54
8.4.6.3 Evaluation of the CBC diagnostic parameter 8.4-56
8.4.6.4 Meaning of CBC diagnosis 8.4-57
8.4.7 Appendix 8.4-60

8.5 CBC CANopen communication board 8.5-1
8.5.1 Object directory 8.5-5
8.5.2 Commissioning the CBC 8.5-16
8.5.2.1 General settings 8.5-16
8.5.2.2 NMT state 8.5-27
8.5.2.3 Relation between PDO/PZD and SDO/PKW 8.5-29
8.5.2.4 PDO mapping 8.5-34
8.5.3 Manufacturer-specific objects 8.5-48
8.5.3.1 Parameter editing 8.5-48
8.5.3.2 Example: Change parameter value with object 4001h 8.5-52
8.5.3.3 Setting factory values (defaults) via CANopen 8.5-53
8.5.3.4 Changing the baud rate and bus address (on MASTERDRIVES MC only) 8.5-54
8.5.4 Faults and alarms 8.5-55
8.5.4.1 Structure of object 1003_h (pre-defined error field) 8.5-55
8.5.4.2 Error codes 8.5-56
8.5.5 Life guarding / node guarding 8.5-59
8.5.6 The state machine 8.5-60
8.5.6.1 Control word 8.5-61
8.5.6.2 Status word 8.5-62
8.5.6.3 Modes of operation 8.5-64
8.5.7 Description of individual modes 8.5-65
8.5.7.1 Profile Position mode 8.5-65
8.5.7.2 Profile Velocity Mode 8.5-68

8.5.7.3 Synchronous mode 8.5-70
8.5.7.4 Homing mode 8.5-71
8.5.7.5 Profile Torque mode 8.5-97
8.5.7.6 Setup mode 8.5-97
8.5.7.7 Automatic Position mode 8.5-98
8.5.7.8 Automatic Single Block mode 8.5-98
8.5.8 Diagnostics and troubleshooting 8.5-99
8.5.8.1 Error and alarm displays on basic unit 8.5-99
8.5.8.2 Evaluation of CBC diagnostic parameter 8.5-103
8.5.8.3 Meaning of CBC diagnostics 8.5-104
8.5.9 CANopen EDS 8.5-106
8.5.10 Parameterization 8.5-107
8.5.10.1 Parameterization for the CBC CANopen with MASTERDRIVES MC_F01 and MASTERDRIVES MC_B-Pos 8.5-107
8.5.11 Logical interconnections for control and status words 8.5-108
8.5.12 General plans of interconnections in MASTERDRIVES MC 8.5-116
8.5.13 Terms and abbreviations 8.5-133

9 TECHNOLOGY OPTION F01 9-1

9.1 Enabling Technology Option F01 9-1

9.2 Overview of the Documentation 9-1

9.3 Application Areas 9-3
9.3.1 General Functions 9-3
9.3.2 Positioning 9-5
9.3.3 Synchronization 9-7
9.3.4 Technology Functions Already Included in the Standard Software 9-13
9.3.5 Seamless Integration in SIMATIC Automation Solutions 9-14

9.4 Brief Description of the Technology Functions 9-15
9.4.1 Overview of the Function Diagrams 9-15
9.4.2 Integrating the Technology into the Basic unit [801] 9-16
9.4.3 General Information on Position Encoder Evaluation [230] ... [270] 9-16
9.4.4 Resolver Evaluation [230] 9-18
9.4.5 Optical Sin/Cos Encoder [240] 9-19
9.4.6 Multiturn Encoder Evaluation [260, 270] 9-21
9.4.7 Pulse Encoder Evaluation [250, 255] 9-30
9.4.8 Position Sensing System for Motor Encoder [330] 9-33
9.4.9 Using absolute encoders for positioning of motors with load-side gearing and rotary axis 9-46
9.4.10 Linear axis with absolute encoder when the traversing range is greater than the display range of the encoder. 9-49
9.4.11 Position Sensing System for External Machine Encoder [335] 9-50
9.4.12 Position Control System [340] 9-51
9.4.13 Technology Overview and Mode Manager [802] 9-54
9.4.14 Machine Data [804] 9-56
9.4.15 Parameter Download File POS_1_1 [806] 9-57
9.4.16 Positioning Control Signals [809] 9-58
9.4.17 Positioning Status Signals [811] 9-58
9.4.18 Digital I/Os for Positioning [813] 9-59

9.4.19	Evaluation and Control of the Position Sensing System, Simulation Mode [815]	9-59
9.4.20	Setpoint Output and Enabling [817]	9-60
9.4.21	Faults, Warnings, Diagnostics [818]	9-60
9.4.22	Setup Mode [819]	9-61
9.4.23	Homing Mode [821]	9-62
9.4.23.1	Homing with homing switch only	9-65
9.4.23.2	Homing with encoder zero mark only	9-66
9.4.23.3	Use of a reversing switch during homing	9-66
9.4.24	MDI Mode [823]	9-67
9.4.25	Control Mode [825]	9-71
9.4.26	Automatic and Automatic Single-Block Mode [826, 828]	9-72
9.4.27	Roll Feed [830]	9-72
9.4.28	Synchronization Mode - Overview [831]	9-73
9.4.29	Virtual Master Axis [832]	9-81
9.4.30	Real Master with Deadtime Compensation [833]	9-82
9.4.31	Engaging/Disengaging Cycle [834]	9-83
9.4.32	Gearbox Function [835]	9-87
9.4.33	Generation of the Position Setpoint [836]	9-88
9.4.34	Catch-up Function [837]	9-88
9.4.35	Cam [839]	9-89
9.4.36	Synchronization to master value [841]	9-95
9.4.37	Displacement Angle Setting [841]	9-96
9.4.38	Position Correction [843]	9-97
9.4.39	Referencing "on the fly" for synchronization [843]	9-98
9.5	Communication with the Technology	9-99
9.5.1	Process Data Communication (PZD)	9-99
9.5.2	Parameter Transfer (PKW)	9-102
9.5.3	Standard Function Blocks for PROFIBUS-DP and USS	9-103
9.5.4	Additionally Available SIMATIC S7 Software	9-104
9.5.5	USS Interface	9-106
9.5.6	SIMOLINK	9-107
9.6	Configuration	9-109
9.6.1	Encoders for the Position Sensing System	9-109
9.6.2	Requirements of Position Encoders for Rotary Axes	9-110
9.6.3	Brake Controller	9-111
9.7	Application Examples	9-112
9.7.1	Positioning of a Linear Axis via PROFIBUS	9-112
9.7.2	Positioning and Synchronization with Virtual Master Axis (Suitable for Self-Study)	9-112
9.7.2.1	Task Description	9-112
9.7.2.2	Overview Diagram	9-113
9.7.2.3	Connection of Digital Inputs	9-116
9.7.2.4	Connection and Parameters of the Position Sensing System	9-119
9.7.2.5	Velocity Normalization P353 [20.5] and P205 [340.2]	9-120
9.7.2.6	Machine Data Input U501 and U502 [804]	9-121
9.7.2.7	Connecting the Technology to the Speed and Position Controllers	9-123
9.7.2.8	Setting the Parameters for the Positioning Modes	9-124
9.7.2.9	Testing the Positioning Functions of the Application Example	9-125
9.7.2.10	Setting the Parameters for the Virtual Master Axis	9-126

9.7.2.11 Testing the Virtual Master Axis 9-127
9.7.2.12 Configuring the Synchronization Function....9-127
9.7.2.13 Configuring the SIMOLINK Master....9-128
9.7.2.14 Setting the Parameters for Drive 1 (SIMOLINK Slave) 9-129
9.7.2.15 Testing the Synchronization in the Application Example....9-129
9.7.3 Synchronism with the virtual master axis by means of clock-synchronized Profibus (suitable for private study)....9-131
9.7.4 Roll Feed....9-140
9.7.5 Application Using the SIMATIC S7 GMC Software....9-140

9.8 Commissioning the Technology....9-140
9.8.1 Measurement and Diagnostics Resources 9-140
9.8.2 Commissioning the Technology....9-141
9.8.3 Checking the Speed/Position Controller 9-142
9.8.4 Defining the Actual Speed Value Normalization....9-143
9.8.5 Commissioning the MASTERDRIVES Basic Functions....9-144
9.8.6 Defining the Length Unit LU 9-144
9.8.7 Defining the Actual Value Weighting Factor (AVWF) 9-145
9.8.8 Defining the Maximum Traversing Velocity....9-147
9.8.9 Procedure for Using the "GMC-BASIC" S7 Software....9-148
9.8.10 Defining the Positioning Input Signals....9-149
9.8.11 Defining the Positioning Status Signals....9-150
9.8.12 Connection and Parameters of the Position Sensing System....9-151
9.8.13 Machine Data Input MD1...MD50....9-153
9.8.14 Connecting the Technology to the Speed and Position Controller....9-154
9.8.15 Setting the Parameters for the Positioning Modes....9-155
9.8.16 Safety Information, Hardware Limit Switches 9-156
9.8.17 Commissioning the Positioning Modes 9-157
9.8.18 Configuring and Testing the Virtual Master Axis 9-159
9.8.19 Setting the Parameters for the Synchronization Block....9-160
9.8.20 Configuring and Testing the SIMOLINK Drive Connection 9-162
9.8.21 Testing the Synchronization Functions 9-162
9.8.22 Help, My Axis Won't Start! 9-163
9.8.23 General Commissioning Information....9-164

9.9 Faults, Warnings, Diagnostics 9-166

9.10 Hardware and Software Replacement Measures 9-167

9.11 Modification History of Technology Option F01....9-168
9.11.1 Software Version V1.0....9-168
9.11.2 Software Version V1.1....9-168
9.11.3 Software Version V1.2....9-169
9.11.4 Software Version V1.3....9-171
9.11.5 Software Status V1.4....9-174

9.12 References, Software Products and Accessories....9-178

10 PROCESS DATA 10-1

10.1 Description of the control word bits 10-1

10.2 Description of the status word bits 10-9

11 ENGINEERING INFORMATION 11-1

11.1 Clarification of the type of drive, technical data and other border conditions .. 11-2

11.2 Specification of the travel curve 11-3

11.3 Calculation of the maximum speed under load and the maximum load torque, selection of the gear 11-4

11.4 Selection of the motor 11-12

11.5 Selection of converters or inverters 11-17

11.6 Selection of the rectifier unit for multi-axis drives 11-19

11.7 Selection of the braking units and braking resistors 11-21

11.8 Selection of other components 11-22

11.9 Calculating example 11-25
11.9.1 Calculation of the x-axis as the travel gear 11-25
11.9.2 Calculating the y-axis as the travel gear 11-34
11.9.3 Calculating the z-axis as the lifting drive 11-35
11.9.4 Selection of the rectifier unit 11-43
11.9.5 Selection of the braking resistor 11-44

Annex

Function diagrams

Parameter lists

Faults and Alarms

Lists of stored motors

Dimension Drawings

1 System Description

1.1 Overview

The SIMOVERT MASTERDRIVES MC (Motion Control) belongs to the SIMOVERT MASTERDRIVES product group. This product group represents an overall modular, fully digital component system for solving all drive tasks posed by three-phase drive engineering. The availability of a high number of components and the provision of various control functionalities enable it to be adapted to the most diversified applications.

Control functionality

The control functionality is determined by the software stored in the inverter and converter modules. The following different control versions are provided within the SIMOVERT MASTERDRIVES product group:

- Vector control (VC)
  Vector control for higher demands regarding accuracy and dynamic performance
- Motion control (MC)
  Vector control for servo-drive applications, as an option with higher-level technology functions

Components

The SIMOVERT MASTER DRIVES product group comprises the following components:

- Accessories Complete converters
- Inverters
- Rectifier units (RU)
- Rectifier/regenerative feedback units (RU, AFE)
- Braking units and braking resistors
- Capacitor module (CM)
- Linking module
- DC link bus module
- Line filters
- Input reactors
- Fuses
- Optional boards:
  - Sensor boards (SBx) for speed and position sensing
  - Communication boards (CBx) for field bus interfacing
  - SIMOLINK (SLx) for fast transmission of setpoints and actual values
- Software options
- Accessories

1.2 System Description

The control functionality of Motion Control is especially tailored to the demands of servo-drive engineering. The vector current control enables fast current injection into the motor windings in conjunction with short sampling times. The related highly dynamic build-up of the torque provides a good basis for higher-level closed-loop control circuits.

With the closed-loop current control, it is possible to operate both synchronous motors and induction motors. Various types of encoders can be used for sensing the necessary speed and positional signals.

The Motion Control functionality is available both in converter and inverter modules which are designed for a system voltage range of 380 V – 15 % to 480 V + 10 %.

All units are provided with a comprehensive basic functionality which can be expanded, if required, by extensive technology and communication functions by the use of software and hardware options. This enables the units to be adapted to the most diversified conditions of service. All closed-loop control functions are implemented with freely assignable function blocks which can be combined as desired. This enables the software to be flexibly adapted to various applications.

Menu structures stored in the unit software simplify start-up and visualization of the drives in conjunction with various operator control panels. PC-assisted tools enable effective parameter setting and data security.

Performance features

The units with Motion Control functionality have the following performance features:

- Available as a converter and as an inverter module
- Output range from 0.5 kW to 250 kW
- Various configurations possible for multi-axis drives
- Integrated DC link bus module and fusing
- integrated "Safe STOP" function (optional)
- Control functionality with servo-characteristics for synchronous and induction motors
- Interfacing of various position encoders and tachometers
- Integrated USS interface for the configuration of simple bus systems
- Interfacing of various field buses
- Drive networking with up to 200 nodes via SIMOLINK
- Integrated technology functions for positioning, synchronism and cam disk
- Definition of the closed-loop control structures by means of freely assignable function blocks
- User-friendly start-up and diagnostics procedures
- Menu prompting
- Graded operator control and visualization by means of an integrated simple standard operator control panel, a user-friendly operator control panel or via PC
- Uniform PC-capable programming software (SIMOVIS/DriveMonitor)
- In accordance with the currently applicable European standards, CE designation
- UL/CSA approval

1.3 Construction Sizes

The power components (converter, inverter, rectifier unit and regenerative feedback unit) used for the Motion Control functionality are available in three types of construction. With reference to the converter/inverter, control versions are available which are assigned to the following output ranges:

- Compact PLUS 550 W to 18.5 kW
- Compact 2.2 kW to 37 kW
- Chassis 45 kW to 250 kW

1.4 Communication

A differentiated communication concept makes it possible to use the correct communication medium depending on the respective requirement. The following communication interfaces are available:

- Integrated serial interface(s) with USS protocol for parameter setting, operator control and visualization of the units with OP1S or PC
- Optional boards for various field bus interfaces (e.g. Profibus DP) for integration in the automation
- Optional board for connecting up SIMOLINK for fast and synchronous data transfer between technologically connected drives (e.g. angular synchronism).

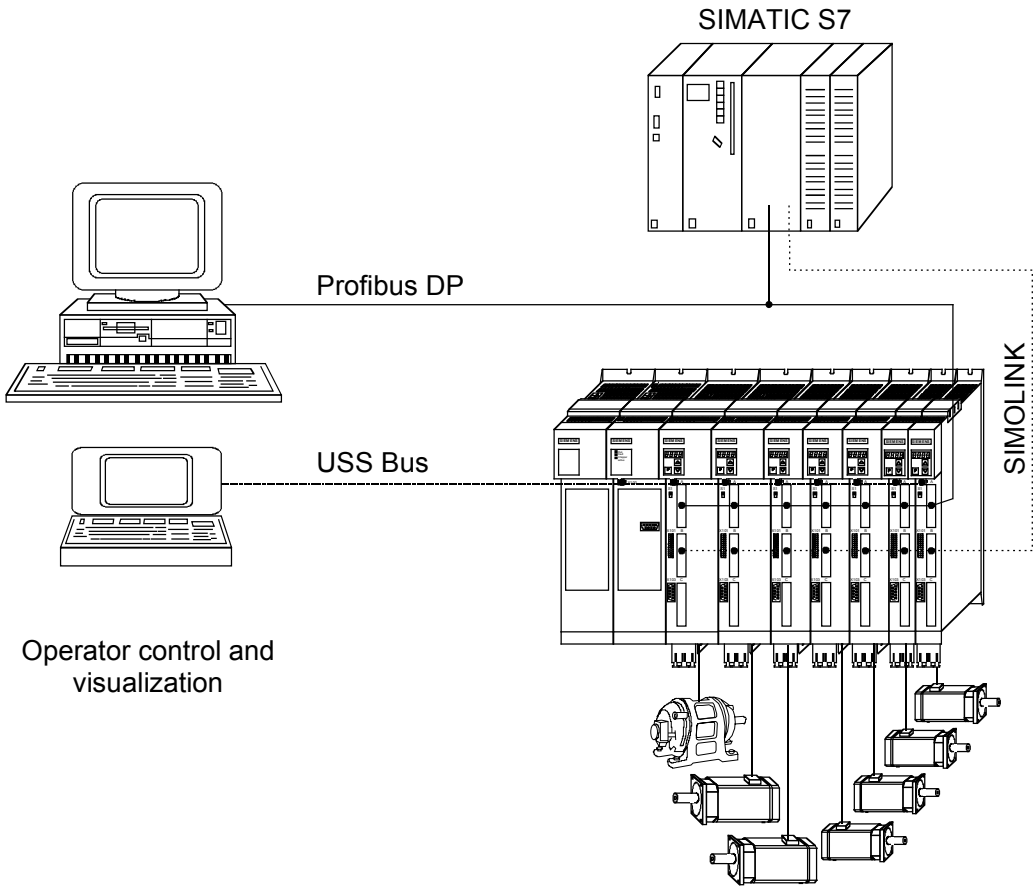

Fig. 1-1 Communication

2 Configuration and Connection Examples

DANGER

The device must be disconnected from its voltage supplies (24 V DC electronics supply and DC link / mains voltage) before the control and encoder leads are connected or disconnected!

2.1 Compact PLUS type units

2.1.1 Single-axis drive

The single-axis drive (see Fig. 2-1 on page 2-2) is used if only single-drive tasks need to be accomplished or if power equalization through several axes is either undesired or not possible.

For this purpose, a converter is used that is directly connected to the 3-phase supply via an external main contactor, a line filter and a line reactor as necessary. Any regenerative energy is stored in the capacitor module or reduced in the braking resistor.

2.1.2 Multi-axis drive up to 3 axes

In the case of multi-axis drives (see Fig. 2-2 on page 2-3) a converter (AC-AC) can be combined with inverters (DC-AC). The converter rectifies the line voltage and supplies the inverters with direct voltage via the DC link bus module. The power supply integrated in the converter further provides the 24 V supply voltage for the electronics of a maximum of 2 inverters.

CAUTION

If more than 2 inverters are connected, the 24 V supply for the electronics must be provided by an external power supply.

The total rated output currents of the inverters supplied by a converter must not exceed the rated output current of the feeding converter (in the case of 6SE7021-0EP50 only half the rated output current).

The regenerative energy generated in one axis can either be used up by the other motors, stored in the capacitor module or reduced in the braking resistor.

2.1.3 Multi-axis drive

In the case of multi-axis drives (see Fig. 2-3 on page 2-4) with more than 3 axes, several inverters are connected to the line voltage via a common rectifier unit.

An external power supply is required for the 24 V supply voltage for the inverter electronics.

The regenerative energy originating in one axis can be used by the other motors, stored in the capacitor module or dissipated in the braking resistor.

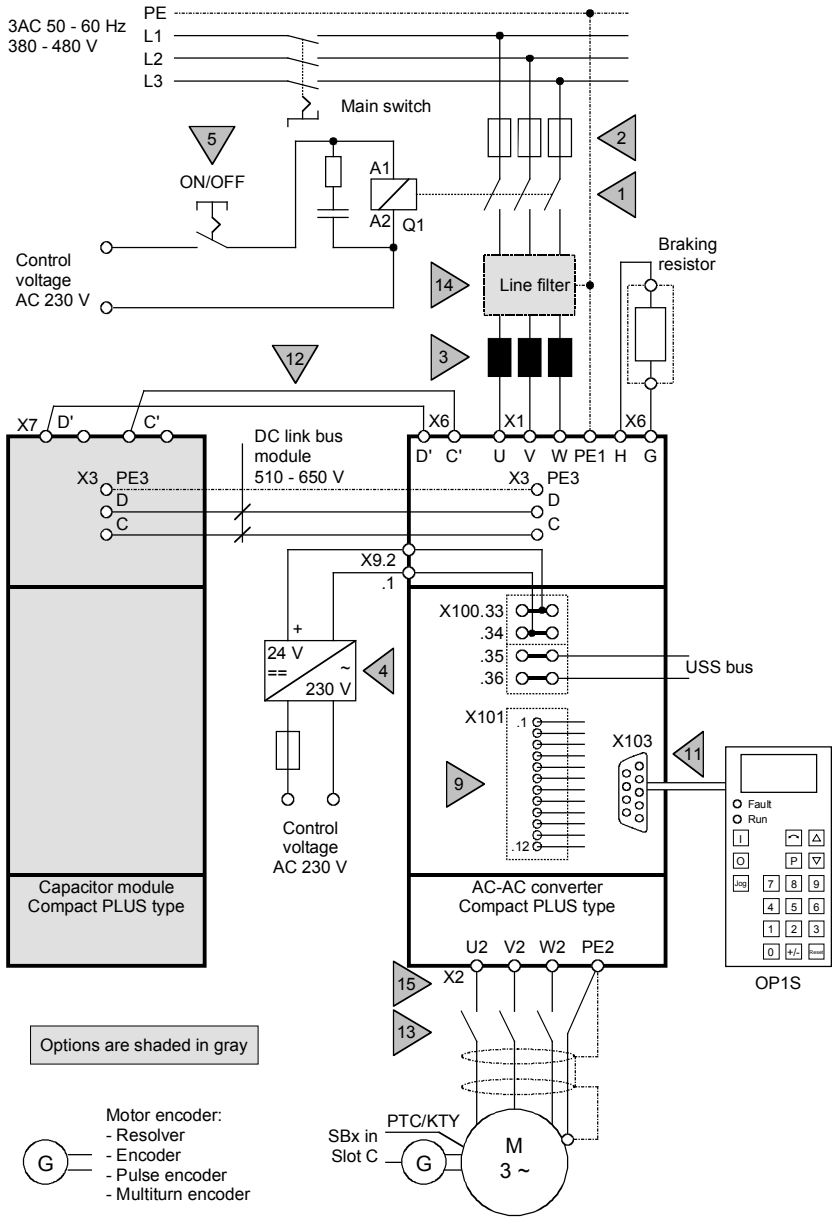

Fig. 2-1 Configuration example of a single-axis drive of the Compact PLUS type

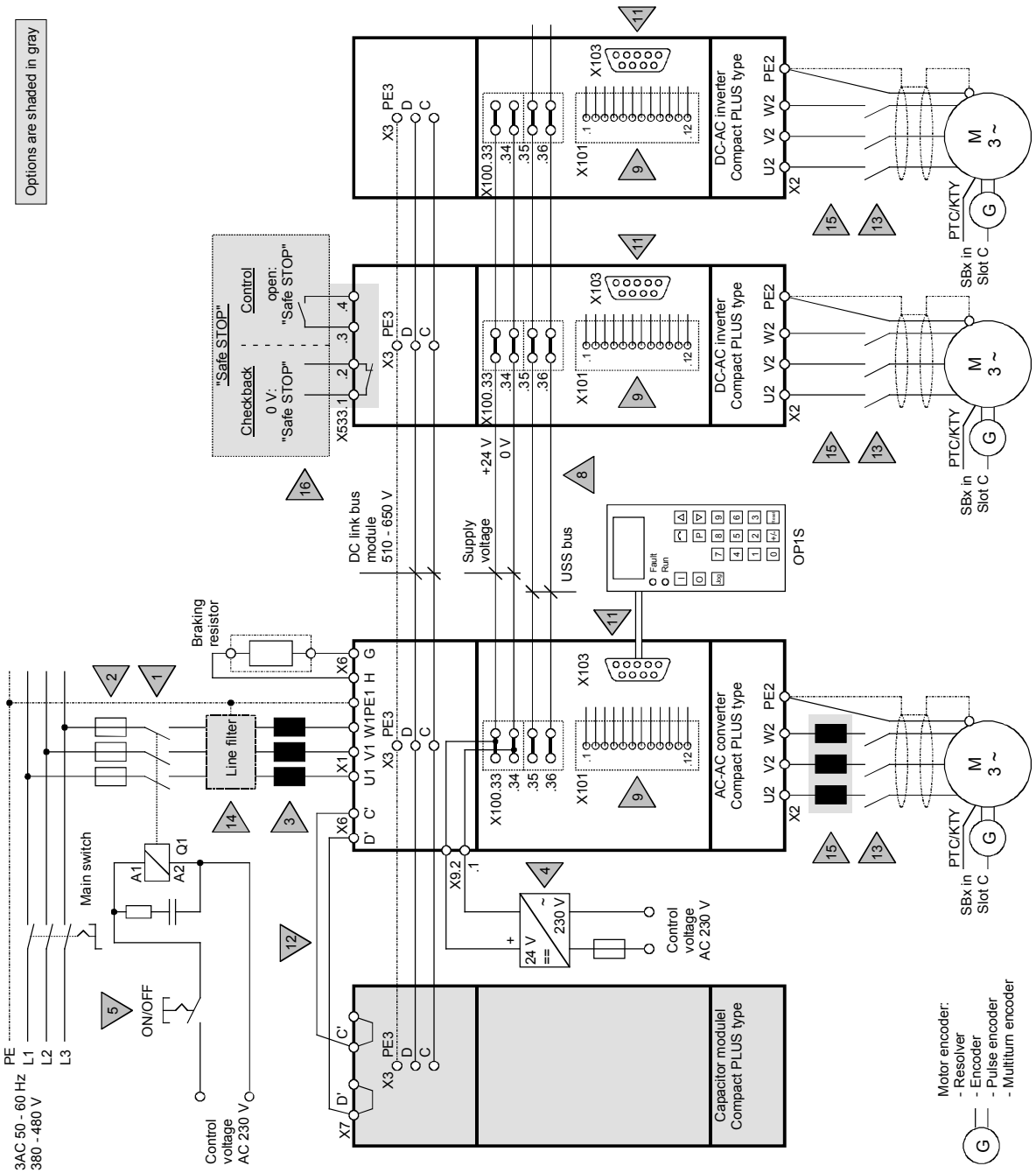

Fig. 2-2 Configuration example of a multi-axis drive with up to 3 axes of the Compact PLUS type

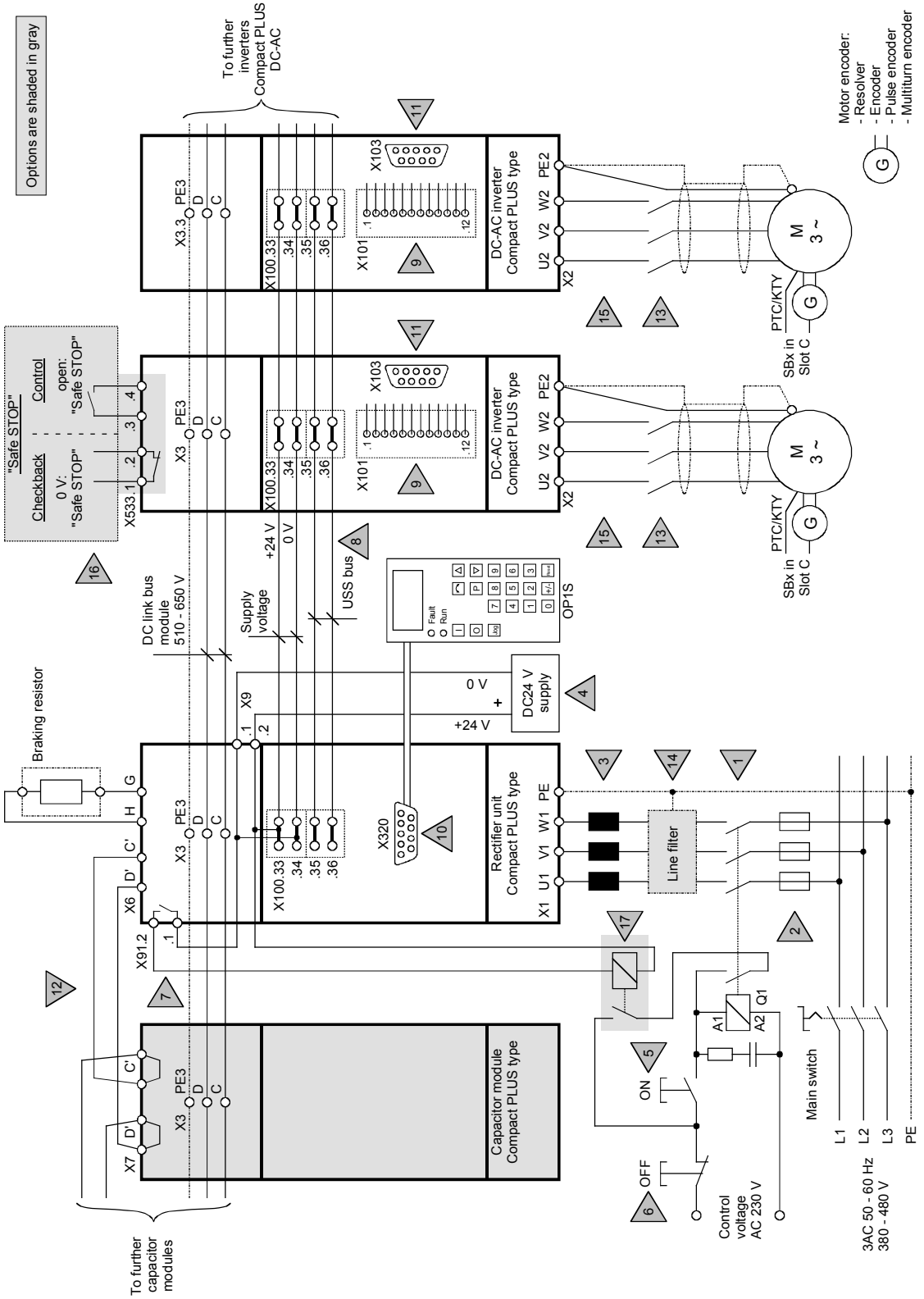

Fig. 2-3 Configuration example of a multi-axis drive with rectifier unit of the Compact PLUS type

2.1.4 Configuration and Connection Examples (Compact PLUS)

NOTE

The following explanations refer to the numbered gray triangles in Figs. 2-1 to 2-3. These figures are just examples of possible configurations of drives. The necessary individual components have to be clarified according to the specific task.

The information and notes required for dimensioning the individual components and the respective order numbers can be found in the Catalog.

1) Line contactor Q1

All the equipment is connected to the line via the line contactor, which is used to separate it from the line if required or in the event of a fault. The size of the line contactor depends on the power rating of the connected converter or inverter.
If the line contactor is controlled from the converter, the main contactor checkback time P600 should be set to at least 120 ms.

2) Line fuses

According to their response characteristic and to suit the requirements, the line fuses protect the connected cables and also the input rectifier of the unit.

3) Line commutating reactor

The line commutating reactor limits current spikes, reduces harmonics and is necessary for keeping system perturbations to within the limits laid down by VDE 0160.

4) 24 V power supply

The external 24 V supply is used to maintain the communication and diagnostics of the connected-up units even with powered-down line voltage.

The following criteria apply regarding dimensioning:

- A current of 1 A must be provided for the rectifier unit, and a current of 2 A for each inverter connected.
- When the 24 V supply is powered up, an increased inrush current will be generated that has to be mastered by the power supply.
- No controlled power supply unit has to be used; the voltage must be between 20 V and 30 V.

5) ON/OFF

In the case of a single drive and a multi-axis drive without a rectifier unit, a switch is used to energize or de-energize the line contactor. When they are switched off, the drives are not brought to a controlled standstill, but are braked only by the load.

In the case of a multi-axis drive with a rectifier unit, a pushbutton is used to energize the line contactor. The line contactor is kept energized by means of a lock-type contact connected to the fault signaling relay of the rectifier unit, as long as no fault is detected at the rectifier unit.

6) OFF switch

Operating the OFF switch causes the line contactor to open immediately.

The drives are not brought to a controlled standstill, but are braked only by the load.

7) Fault signaling relay

If a fault occurs in the rectifier unit, a fault message is output via the connecting contacts of the signaling relay.

When the 24 V supply is connected, the relay closes as long as no fault is present.

In the event of a fault, the lock of the line contactor is opened, the contactor drops out and the drives coast down.

8) Internal USS bus

The USS bus is used for the internal communication of the units and only has to be connected if it is required.

9) X101

The digital inputs and outputs and the analog input and output have to be assigned according to the requirements of the drives.

CAUTION: Terminal X101.1 may **not** be connected with the external 24V supply.

10) X320 interface of the rectifier unit

The X320 interface of the rectifier unit serves only for permanently connecting the user-friendly OP1S operator control panel and for connection to the on-line inverters.

Please refer to the relevant operating instructions for the applicable measures and notes for correct operation.

11) X103 serial interface

The serial interface is used to connect the user-friendly OP1S operator control panel or a PC. It can be operated either according to the RS232 or the RS485 protocol.

Please refer to the relevant operating instructions for the applicable measures and notes for correct operation.

12) Precharging the capacitor module

When a capacitor module is used, the terminals for precharging the capacitors must be connected.

13) Output contactor

The use of an output contactor is purposeful if a motor needs to be electrically isolated from the converter/inverter with the DC link charged.

14) Line filter

Use of a line filter is necessary if the radio interference voltages generated by the converters or rectifier units need to be reduced.

15) Motor supply line

The Siemens cables described in the catalog should be used for connecting the converter and the motor to each other.

The use of output reactors, output filters, sinusoidal and dv/dt filters is not permissible.

The permissible cable lengths are shown in the following tables:

Compact PLUS Inverter DC-AC

	Pulse frequency 5 kHz		Pulse frequency 10 kHz	
Unit MLFB	**Shielded cable**	**Shielded cable**	**Unshielded cable**	**Unshielded cable**
6SE7012-0TP50	100 m	70 m	50 m	35 m
6SE7014-0TP50	140 m	100 m	70 m	50 m
6SE7016-0TP50	140 m	100 m	70 m	50 m
6SE7021-0TP50	140 m	100 m	70 m	50 m
6SE7021-3TP50	140 m	100 m	70 m	50 m
6SE7021-8TP50	140 m	100 m	70 m	50 m
6SE7022-6TP50	140 m	100 m	70 m	50 m
6SE7023-4TP50	140 m	100 m	70 m	50 m
6SE7023-8TP50	140 m	100 m	70 m	50 m

Compact PLUS Frequency Converter AC-AC

	Pulse frequency 5 kHz		Pulse frequency 10 kHz	
Unit MLFB	**Unshielded cable**	**Shielded cable**	**Unshielded cable**	**Shielded cable**
6SE7011-5EP50	100 m	70 m	50 m	35 m
6SE7013-0EP50	140 m	100 m	70 m	50 m
6SE7015-0EP50	140 m	100 m	70 m	50 m
6SE7018-0EP50	140 m	100 m	70 m	50 m
6SE7021-0EP50	140 m	100 m	70 m	50 m
6SE7021-4EP50	140 m	100 m	70 m	50 m
6SE7022-1EP50	140 m	100 m	70 m	50 m
6SE7022-7EP50	140 m	100 m	70 m	50 m
6SE7023-4EP50	140 m	100 m	70 m	50 m

The maximum lengths for pulse frequencies between 5 and 10 kHz are obtainable by linear interpolation between the length for 5 kHz and the length for 10 kHz.

16) Safe STOP (Option)

The "Safe Stop" option enables the power supply for the transmission of pulses into the power section to be interrupted by a safety relay. This ensures that the unit will not generate a rotating field in the connected motor.

17) Auxiliary contactor

The auxiliary contactor is used to interrupt the self-holding condition of the main contactor in the event of a fault signal. It must be used if the control voltage for line contactor Q1 is 230 V AC.

The auxiliary contactor is not required if a line contactor with a control voltage of 24 V DC is used.

Braking resistor

The brake choppers are already included in the Compact PLUS rectifier units and converters. Only a suitable external braking resistor has to be connected up, if required.

See also Chapter 11.7.

Encoder cable

You will find preassembled encoder cables in Catalog DA65.11, chapter 3. Please note that different encoder cables are required for encoders and multiturn encoders. If the wrong encoder cable is used for one or the other, fault F051 (during operation) or alarm A018 or A019 is generated.

DANGER

The encoder cable must only be connected and plugged in when the converter is disconnected from the supply (24 V and DC link). Damage to the encoder could result if this advice is not heeded. This especially concerns the multiturn encoder EQN1325. Encoder or encoder cable faults can result in incorrect field orientation and therefore in uncontrolled axis movements.

2.2 Compact and chassis-type units

2.2.1 Water-cooled units

If you are using **water-cooled** MASTERDRIVES please note that the permissible operating pressure depends on the construction type.

Type B to G Operating pressure ≤ 1 bar. Operating pressures above 1 bar not permitted! If the system is to be operated at higher pressure, the pressure on each unit must be reduced to 1 bar initial pressure.

Type ≥ J Operating pressure ≤ 2.5 bar. Operating pressures above 2.5 bar not permitted! If the system is to be operated at higher pressure, the pressure on each unit must be reduced to 2.5 bar initial pressure.

2.2.2 Single-axis drive with Compact or chassis-type units

The single-axis drive (see Fig. 2-4 on page 2-9) is used for single-axis applications or where energy balancing over several axes is not wanted or not possible.

In this case, only one converter is used that, where applicable, is connected directly to the three-phase system via an external main contactor, a line filter and a line reactor. Any regenerative energy is dissipated in the braking resistor.

2.2.3 Multi-axis drive with Compact or chassis-type units

In the case of multi-axis drives, several inverters are connected to the line voltage via a common rectifier unit.

A 24 V power supply is needed for the rectifier unit.

The regenerative energy originating in one axis can be used by the other motors, stored in the capacitor module or dissipated in the braking resistor.

- Configuration examples:
  - Multi-axis drive with Compact units (see Fig 2-5 on page 2-10)
  - Multi-axis drive with chassis-type units (see Fig. 2-6 on page 2-11)

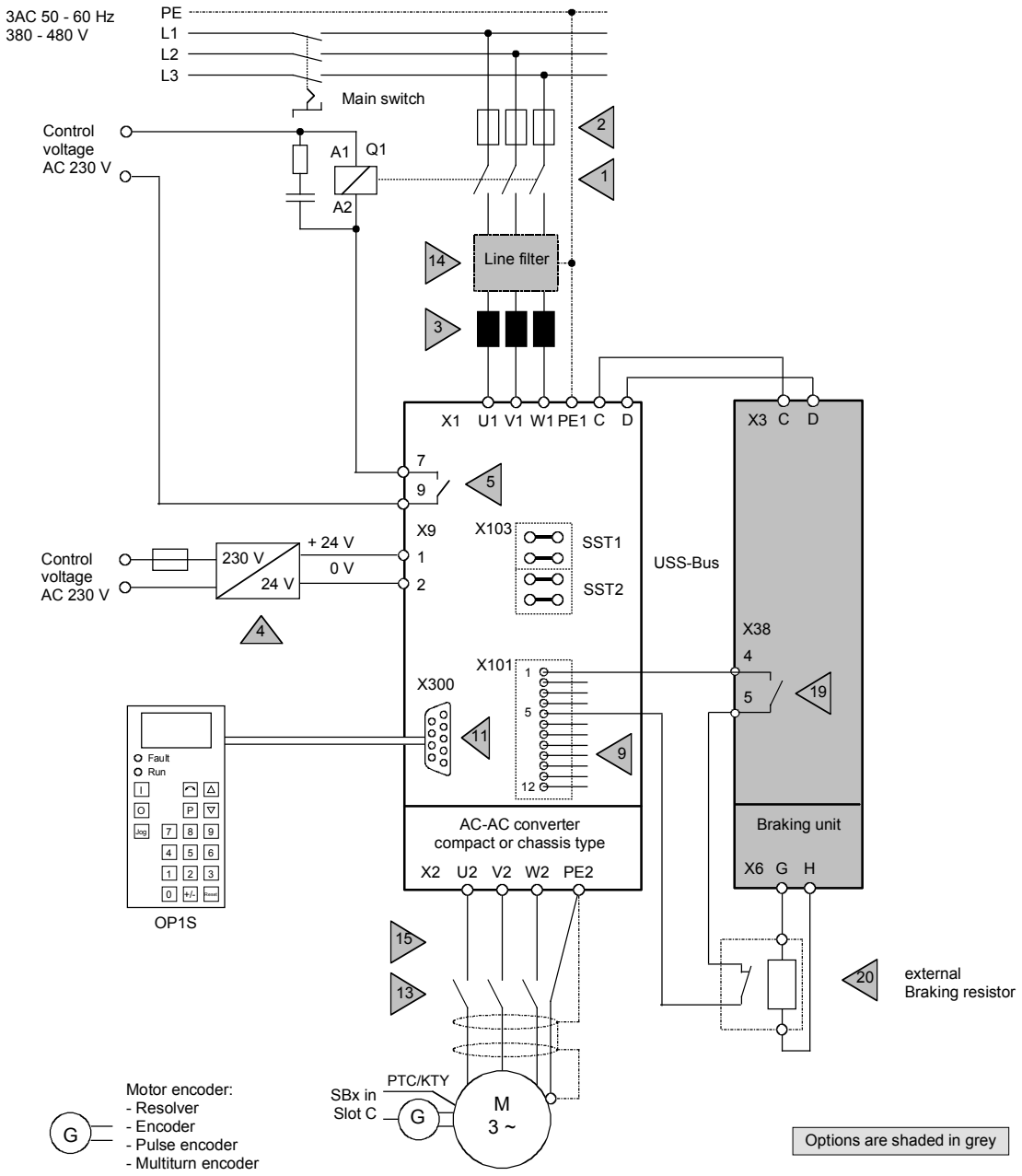

Fig. 2-4 Configuring example: single-axis drive with Compact or chassis-type units

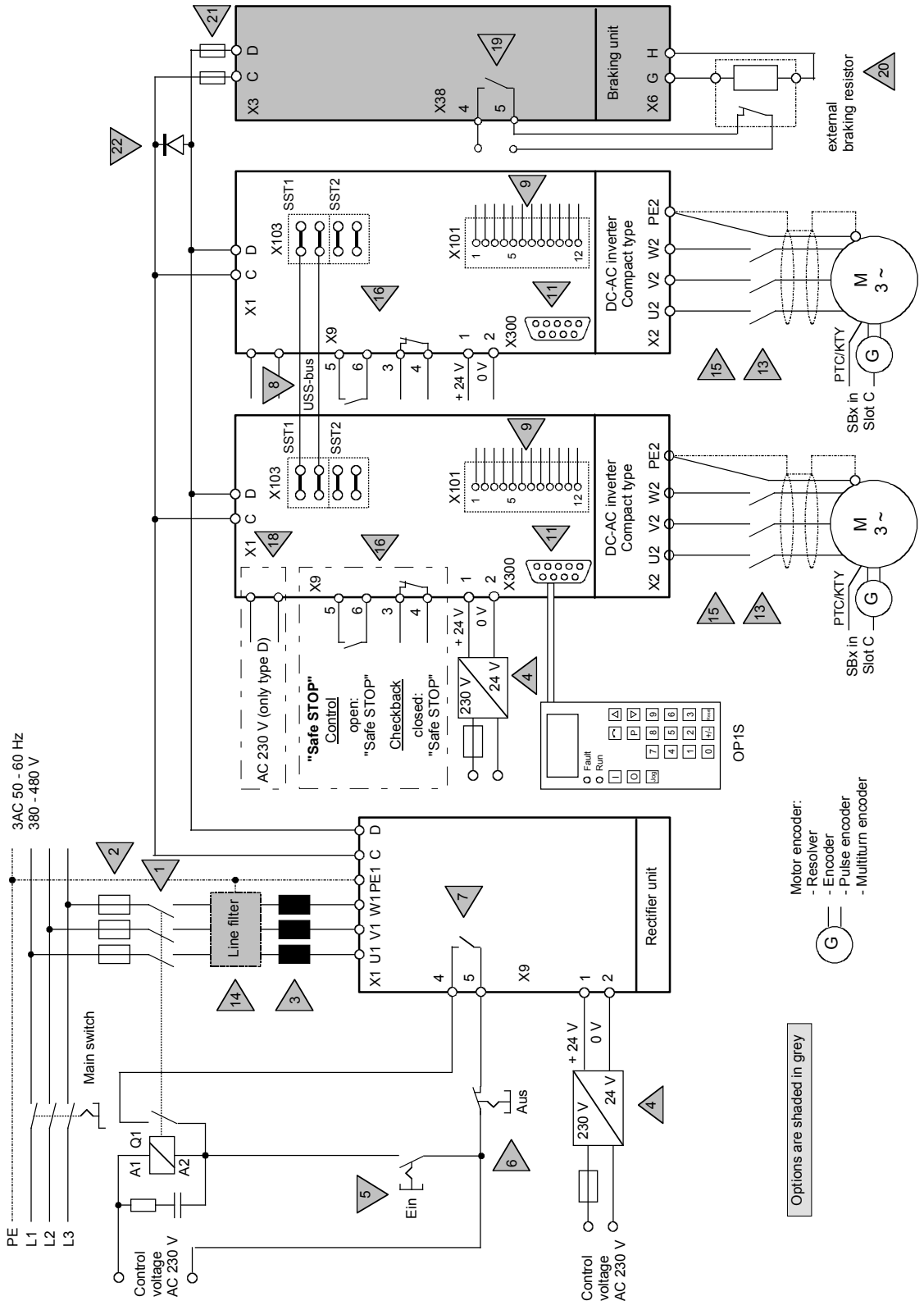

Fig. 2-5 Configuration example: multi-axis drive with Compact units

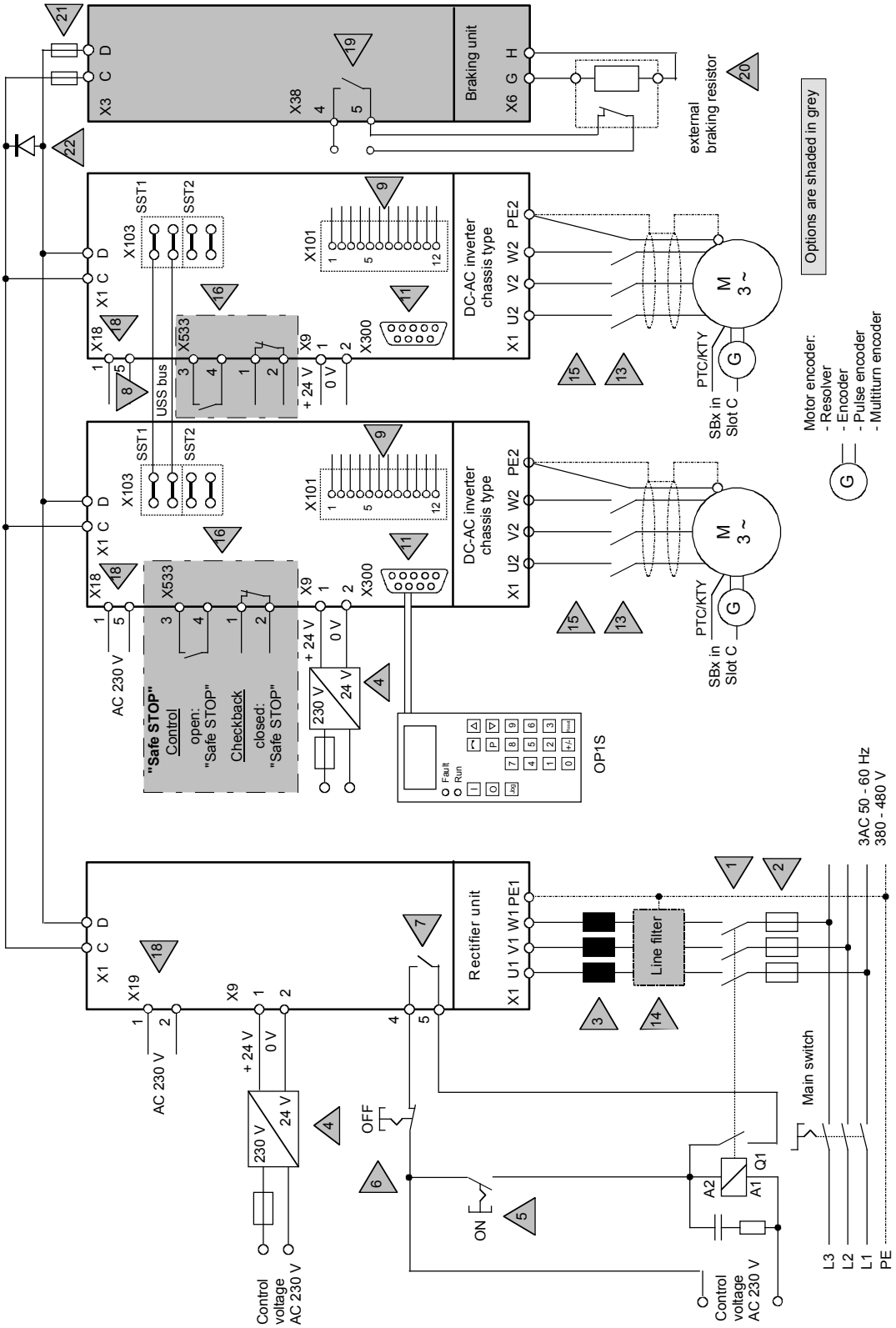

Fig. 2-6 Configuration example: multi-axis drive with chassis-type units

2.2.4 Explanations relating to the configuration examples (Compact and chassis-type units)

NOTE

The following explanations refer to the numbered gray triangles in Figs. 2-4 to 2-6, showing the drives in an example configuration. The application decides which components are required.

In the catalog you will find the necessary information, order numbers and notes concerning the ratings of the individual components.

1) Q1 line contactor

The line contactor is used to connect the entire system up to the supply and disconnect it from the supply if required or in the event of a fault.

Dimensioning depends on the output of the connected converters or inverters.

2) Line fuses

According to their response characteristic and to suit the requirements, the line fuses protect the connected cables and also the input rectifier of the unit.

3) Line commutating reactor

The line commutating reactor limits current spikes, reduces harmonics and is necessary for keeping system perturbations to within the limits laid down by VDE 0160.

4) 24 V power supply

The external 24 V supply is used to maintain the communication and diagnostics of the connected-up units even with powered-down line voltage. Rectifier units always require an external 24 V supply.

The following criteria apply regarding dimensioning:

- Currents (see catalog DA65.11)
- When the 24 V supply is powered up, an increased inrush current will be generated that has to be mastered by the power supply.
- No controlled power supply unit has to be used; the voltage must be between 20 V and 30 V.

5) ON/OFF

On a single drive, the line contactor is also switched (via X9: 7,9) with the ON/OFF command (e.g. via the control terminal strip). When it is switched off, depending on the parameterization, the drive is brought to a standstill in a controlled manner before the line contactor opens.

If the line contactor (1) is controlled from the converter (via X9:7,9), the main contactor checkback time P600 should be set to at least 120 ms.

In the case of a multi-axis drive with a rectifier unit, a pushbutton is used to energize the line contactor. The line contactor is kept energized by means of a lock-type contact connected to the fault signaling relay of the rectifier unit, as long as no fault is detected at the rectifier unit.

6) OFF switch

The line contactor is opened as soon as the OFF switch is activated.

The drives are not brought to a standstill in a controlled manner; they are braked only by the connected load.

7) Fault signaling relay

If a fault occurs in the rectifier unit, a fault message is output via the connecting contacts of the signaling relay.

When the 24 V supply is connected, the relay closes as long as no fault is present.

In the event of a fault, the lock of the line contactor is opened, the contactor drops out and the drives coast down.

8) Internal USS bus

The USS bus is used for the internal communication of the units and only has to be connected if it is required.

9) X101

The digital inputs and outputs and the analog input and output have to be assigned according to the requirements of the drives.

If the digital inputs are supplied from an external 24 V supply, this must be referenced to frame X101.2.

CAUTION: Terminal X101.1 may **not** be connected with the external 24V supply.

11) X300 serial interface

The serial interface is used to connect the user-friendly OP1S operator control panel or a PC. It can be operated either according to the RS232 or the RS485 protocol.

Please refer to the relevant operating instructions for the applicable measures and notes for correct operation.

13) Output contactor

The use of an output contactor is purposeful if a motor needs to be electrically isolated from the converter/inverter with the DC link charged.

14) Line filter

Use of a line filter is necessary if the radio interference voltages generated by the converters or rectifier units need to be reduced.

15) Motor supply line

The use of output reactors, sinusoidal or dv/dt filters is not permissible for MASTERDRIVES MC units.

16) Safe STOP (Option for chassis units)

The "Safe STOP" option enables the power supply for the transmission of pulses into the power section to be interrupted by a safety relay. This ensures that the unit will not generate a rotating field in the connected motor.

18) Fan supply

An AC 230 V connection is necessary for the fans on all the chassis-type units (via X18: 1, 5).

On Compact units of type D, the voltage has to be connected directly at the fan fuses F101 and F102.

19) Monitoring of braking unit

This contact opens if there is a fault in the braking unit. It enables the corresponding converter and the line contactor to be de-energized via a digital input of the X101 control terminal strip and via parameterization at "External fault 2" (P586). The thermal contact can be switched in series if an external braking resistor is used.

On a multi-axis drive, depending on the application, a check has to be made as to where the NC contact has to be looped in. It must be borne in mind that contact X38: 4,5 does not close until the DC link voltage has built up at the braking unit.

20) External braking resistor

An external braking resistor can be connected on braking units up to P_{20} = 20 kW in order to increase the continuous braking power.

The internal braking resistor has to be disconnected in this case. On braking units where P_{20} > 20 kW, operation is only possible with an external braking resistor.

21) Fuses for braking unit

The braking units have to be fused on multi-axis drives (see Catalog DA65.11).

22) Free-wheeling diode

If a braking unit is used on multi-axis drives or with strongly varying inverter outputs, a free-wheeling diode has to be used (see Catalog DA65.1).

Encoder cable

You will find preassembled encoder cables in Catalog DA65.11, chapter 3. Please note that different encoder cables are required for encoders and multiturn encoders. If the wrong encoder cable is used for one or the other, fault F051 (during operation) or alarm A018 or A019 is generated.

DANGER

The encoder cable must only be connected and plugged in when the converter is disconnected from the supply (24 V and DC link). Damage to the encoder could result if this advice is not heeded. This especially concerns the multiturn encoder EQN1325. Encoder or encoder cable faults can result in incorrect field orientation and therefore in uncontrolled axis movements.

2.3 Points to look out for when using certain option boards and CUMC

2.3.1 Encoder interface connections

1. **SBM, SBM2 or SBP**
   The encoder cable must only be connected or plugged when the converter is de-energized (24 V and DC link). Damage to the encoder can result if this advice is not heeded. This especially applies to the multiturn encoder EQN1325. An encoder or cable fault can cause incorrect field orientation and therefore uncontrolled axis movement on synchronous machines.
2. **SBM, SBM2 or SBP**
   If two SBPs (pulse encoder evaluation board), two SBMs, or two SBM2s (encoder/multiturn encoder evaluation) are used with the CUMC (6SE7090-0XX84-0AD0), they must not both be slotted into slot A and C simultaneously. Evaluation of the motor temperature encoder will then be incorrect.
   Remedy: Slot motor encoder into slot C and connect the motor temperature sensor. Connect the external encoders using an ADB in slot D, E, F, or G. Applies to compact and chassis units only.
   On the CUMC 6SE7090-0XX84-0AD**1** and greater, two encoder evaluation boards can be connected to the board simultaneously. The motor temperature is always evaluated by the encoder evaluation board in slot C.
3. **SBM2 or SBP**
   Only the SBM2 and the SBP are permitted to be used for an **external encoder.** The pulse encoder simulation of the SBM2 is generally switched off (also on the X420 front connector).
4. **SBM2 or SBP or SBR2**
   The pulse encoder simulation of the **motor** encoder (always in slot C!) on the backplane bus is always applied for further processing by the technology board T300 or T400.
5. SBP or SBM2 or SBM
   If the SBP or the SBM2 or the SBM is the only encoder board inserted, this board will always be recognized as evaluation for the motor encoder.
6. If only one encoder board is inserted, this should be installed in Slot C (otherwise it will not be possible to evaluate the motor temperature).

7. **SBM or SBM2**
   Different encoder cables must be used for encoders and multiturn encoders! Fault F051 (during operation) or alarm A18 or A19 is output if an incorrect encoder cable is used.
8. **SBR2**
   As soon as the supply voltage for the electronics is connected, the pulse encoder simulation outputs as many pulses as are needed for the position actual value counter count for a two-pole resolver to correspond to that of the current rotor position (with reference to 1 revolution).

2.3.2 TB boards

1. In the combination **CUMC** + **CBP** + (**T100** or **T300**) no access to the parameters of the T100 or T300 is possible via the PROFIBUS. This only applies when the CBP is slotted into slot A or slot C.
   Remedy: slot CBP into the adapter board (ADB) in slot G. See also Catalog DA65.11, Chapter 6.
2. Basic device parameters cannot be read or altered via the USS interface of the **T100**.
3. With the OP1S, TB parameters (**T100, T300**) can only be read and altered if the parameter number is entered via the numerical keypad. Access to parameter numbers is no longer possible with the "up" and "down" keys if the next parameter does not exist.
4. If the **T300** is used together with the **SLB** in a single unit, The T300 with item no. 477 407 9000 02 must be product version B or higher. All product versions can be used for item no. 477 407 9000 12.
5. If the**T100** is used together with the **SLB** in a single unit, T100 must be product version L8 or higher.

2.3.3 EB boards

EB1 item no. 477 491 9000 00 with product vers. A on slot A of the CUMC

EB1 connector 5103/monitoring parameters 662.3 (analog input channel3) does **not** display the input of channel 3, but the input of channel 2.

Remedy

Slot EB1 into another slot (adapter board or slot C), or in the case of item no. 477 491 9000 00, use product version B or higher. All product versions can be used with item no. 477 491 9000 10.

2.3.4 CUMC

Positioning with CUMC

The number of traversing data sets available for positioning is limited to 49 on older CUMCs. All 50 data sets are available on
CUMC 475 403 9000 00 hardware version D and higher,
CUMC 475 403 9000 01 (all versions), and Compact Plus units. These boards have a larger EEPROM than older CUMCs.

3 Instructions for Design of Drives in Conformance with EMC Regulations

3.1 Foreword

The modular design of SIMOVERT MASTERDRIVES permits a large number of possible drive converter/equipment combinations so that it is not practical to provide a separate description for every individual combination here. It is more purposeful for this document to provide basic information and generally applicable rules so that you can configure your particular drive converter/equipment combination in an "electromagnetically compatible" manner.

The drives are operated in widely varying environments and any additionally used components (control systems, switch-mode power sections, etc.) can differ considerably as far as their noise immunity and noise emission levels are concerned. For this reason, it is permissible to deviate from the EMC regulations on a case-to-case basis after individual investigation.

In the context of the EMC Law, SIMOVERT MASTERDRIVES are considered as "components" rather than "units". For a better understanding of these instructions, however, the generally used term "units" is used.

With effect from June 1996, the "EMC product standard including special test methods for electric drive units" EN 61800-3 (VDE 0160 T100, IEC 1800-3) is applicable for frequency converters. Before this product standard came into force, the standards EN 50081 with EN 55011 and EN 50082 with IEC 801 were applicable. These are no longer relevant for frequency converters now that the product standard has come into force.

Please contact your local Siemens office regarding any other queries you may have relating to EMC.

3.2 Principles of EMC

3.2.1 What is EMC?

EMC stands for "ElectroMagnetic Compatibility" and, in accordance with the EMC Law §2(7), it defines "the capability of a unit to operate satisfactorily in an electromagnetic environment, without itself causing electromagnetic disturbances which would be unacceptable for other electrical units in this environment".

In principle, this means that units should not interfere with each other. And this is a feature that you have always looked for in your electrical products!

3.2.2 Noise emission and noise immunity

EMC is dependent on two characteristics of the units concerned - the emitted noise and the noise immunity. Electrical equipment can either be treated as a noise source (transmitter) and/or a noise receiver. Electromagnetic compatability exists when the existing interference sources do not affect the function of the noise receivers. It is also possible for a unit to be both an interference source and an interference receiver at the same time. For example, the power section of a frequency converter can be regarded as a noise source, whereas the control section can be regarded as a noise receiver.

The **noise emission** of frequency converters is governed by the European Standard EN 61800-3. The cable-related noise at the mains connection is measured under standard conditions as radio interference voltage. Electromagnetically emitted noise is measured as radio interference (radiated noise). The standard defines limit values "First environment" (public supply networks) and "Second environment" (industrial networks).

When the equipment is connected up to the public supply, the maximum harmonics specified by the local power supply company must be observed.

The **noise immunity** of a unit describes how it behaves when subjected to electromagnetic noise/interference. The requirements and evaluation criteria for the behaviour of the electrical units are also laid down in standard EN 61800-3.

3.2.3 Industrial and domestic applications

Limit values are laid down for emitted noise and noise immunity depending on the application for which the units are envisaged. A differentiation is made between industrial and domestic environments. In industrial environments, the noise immunity of the units must be very high, but lower requirements are made concerning the emitted noise. In domestic environments, i.e. when connected to public supply systems, there are strict regulations concerning emitted noise but, on the other hand, the units can be designed with a lower noise immunity.

If the drive is an integral part of a system, it does not initially have to satisfy any demands regarding emitted noise and noise immunity. However, the EMC Law specifies that a system must as a whole be electromagnetically compatible within its environment. Within the system, the owner will, in his own interest, make sure that his equipment is electromagnetically compatible.

Without a radio interference suppression filter, the emitted noise of the SIMOVERT MASTERDRIVES frequency converters exceeds the limit value "First environment". Limit values are currently still under discussion for the "Second environment" sector (see EN 61800-3 section 6.3.2). However, their high noise immunity makes them insensitive to the noise emitted by units in their vicinity. If all control components of the system (e.g. automation devices) have a noise immunity suitable for industrial environments, then it is not necessary for every drive to maintain this limit value.

3.2.4 Non-grounded systems

In some industrial sectors, non-grounded supplies (IT supplies) are used to increase the availability of the plant/installation. In the event of a ground fault, no fault current flows, and the plant can still produce. However, when a radio interference suppression filter is used, a fault current will flow when a ground fault occurs, which may cause shutdown of the drives or even the destruction of the radio interference suppression filter. In order to minimize this fault current, the radio interference suppression filter has to be designed differently which will quickly reach the physical limits. Radio interference suppression filters additionally affect the concept of non-grounded supply networks and can thus result in a safety risk when used with these networks (see Product Standard EN 61800-3: 1996). If required, radio interference suppression should thus be realized at the grounded primary side of the supply transformer or with a single special filter at the secondary side. The special filter also generates leakage currents to ground. A ground-leakage monitor which is usually used in non-grounded systems has to be adjusted to the special filter.

3.3 The frequency converter and its electromagnetic compatibility

3.3.1 The frequency converter as a noise source

Mode of operation of SIMOVERT MASTERDRIVES

SIMOVERT MASTERDRIVES frequency converters operate with a voltage-source DC link.

In order to keep the power losses as low as possible, the inverter switches the DC link voltage to the motor winding in the form of voltage blocks.

An almost sinusoidal current flows in the motor.

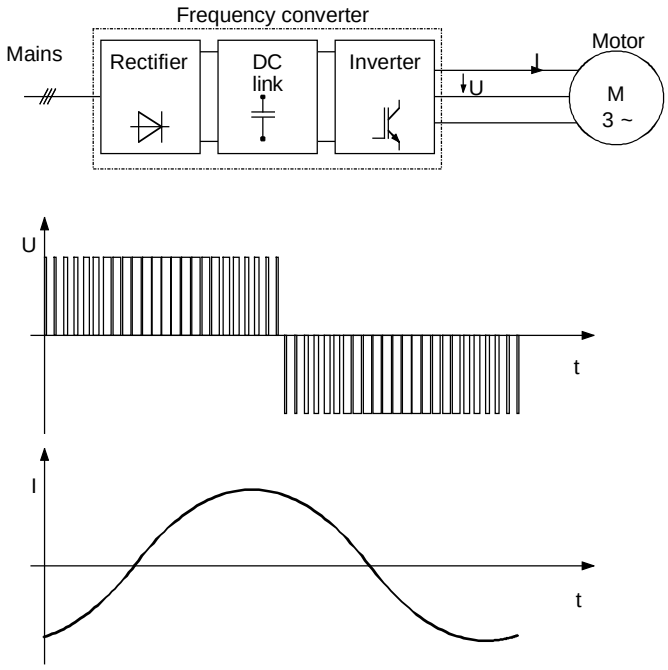

Fig. 3-1 Block diagram showing output voltage V and motor current I of a frequency converter

The described mode of operation in conjunction with high-performance semiconductor switching elements have made it possible to develop compact frequency converters which now play a vital role in drive technology.

As well as having many advantages, the fast semiconductor switches also have one disadvantage:

A pulse-type noise current flows to ground through parasitic capacitances C_P at each switching edge. Parasitic capacitances exist between the motor cable and ground, and also within the motor.

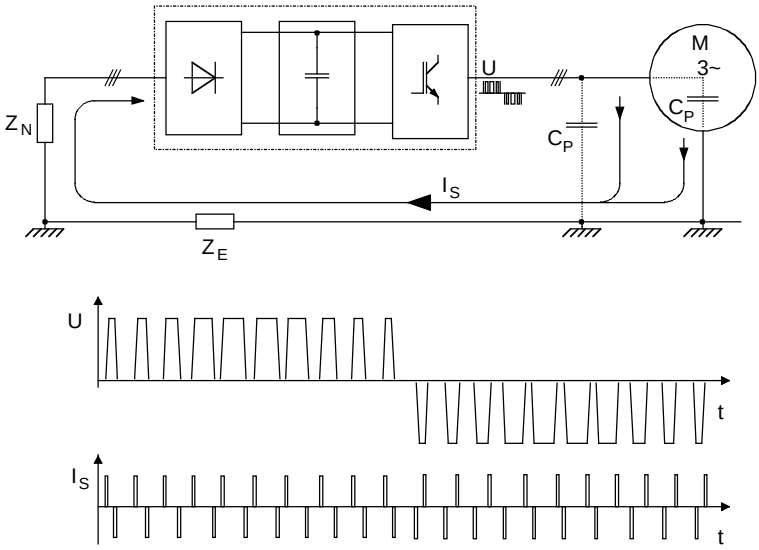

Fig. 3-2 Block diagram showing output voltage V and fault current Is

The source of the fault current I_S is the inverter, which is the reason why the fault current must also flow back to the inverter. Impedance Z_N and ground impedance Z_E act in the return flow path. Impedance Z_N forms parasitic capacitances between the supply cable and ground, which is connected in parallel with the impedance (between phase and ground) of the supply transformer. The noise current itself and the voltage drops across Z_N and Z_E caused by the noise current can also affect other electrical units.

Frequency converters generate the high-frequency noise currents which have already been described. In addition, low-frequency harmonics should be taken into account. As a result of rectification of the line supply, a non-sinusoidal line current is drawn which causes a distortion of the line supply voltage.

Measures to reduce noise emission

Low-frequency harmonics are reduced using **line reactors**.

The high-frequency noise emission can only be reduced if the generated noise current is correctly routed. Using non-shielded motor cables, the noise current flows in an undefined fashion back to the frequency converter, e.g. via foundation/base frame grounders, cable ducts, cabinet frames. These current paths have a very low resistance for currents with a frequency of 50 or 60 Hz. However, the noise current induces a high-frequency component, which can result in problematical voltage drops.

A **shielded motor cable** is absolutely necessary to enable the fault current to flow back to the frequency converter in a defined fashion. The shield must be connected to the housing of the frequency converter and to the motor housing through a large surface area. The shield now forms the easiest path for the noise current to take when returning to the frequency converter.

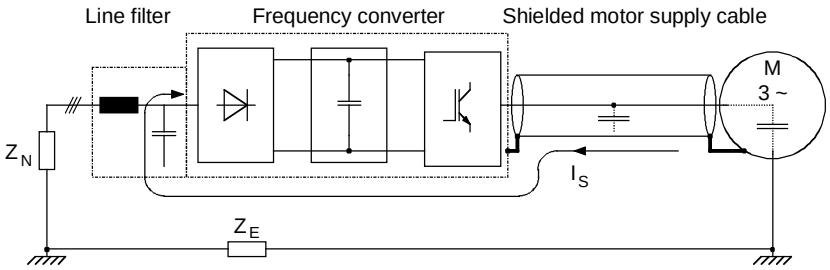

Fig. 3-3 Flow of the noise current with shielded motor cable

A shielded motor cable with a **shield connected at both sides** causes the noise current to flow back to the frequency converter through the shield.

Although (almost) no voltage drop arises across impedance Z_E for shielded motor cables, the voltage drop across impedance Z_N can affect other electrical units.

For this reason, a **radio interference suppression filter** should be installed in the supply feeder cable to the frequency converter. Arrangement of the components as per the following figure.

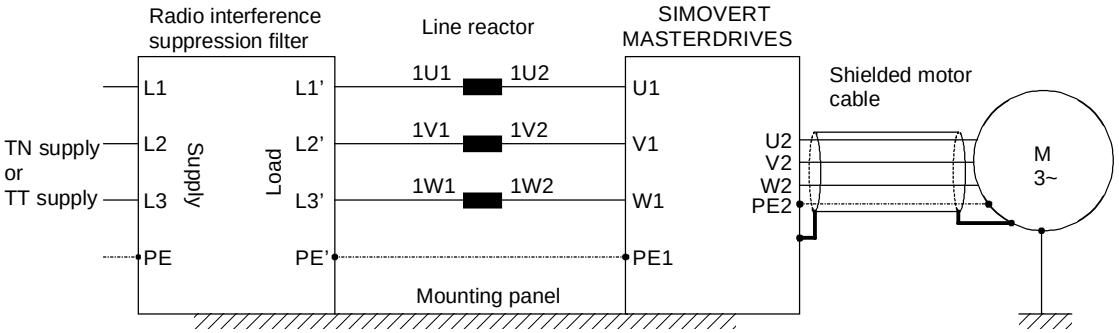

Fig. 3-4 Arrangement of the components

Radio interference suppression filters and frequency converters must be connected through a low-ohmic resistance for the high-frequency noise currents. In practice, this requirement is best satisfied by mounting the frequency converters and radio interference suppression filters on a common panel. Frequency converters and radio interference suppression filters must be connected to the mounting panel through the largest possible surface area.

The SIMOVERT MASTERDRIVES must be installed in an enclosed **cabinet** in order to limit the radio interference radiation. In particular, the radio interference radiation is determined by the control section with its microprocessor and it is therefore comparable with the noise emitted from a computer. If there are no radio transmission services in the immediate vicinity of the SIMOVERT MASTERDRIVES, there is no need for a high-frequency-sealed cabinet.

Radio interference radiation is not limited if the units are installed in racks. In this case, adequate shielding should be provided by suitably designing the equipment room/area.

3.3.2 The frequency converter as a noise receiver

Ways in which noise is received

Noise can enter a unit either galvanically, inductively or capacitively.

The equivalent circuit diagram shows a noise source which causes noise current I_S in the unit due to capacitive coupling effects. The magnitude of the coupling capacitance C_K is determined by the cabling and the mechanical design.

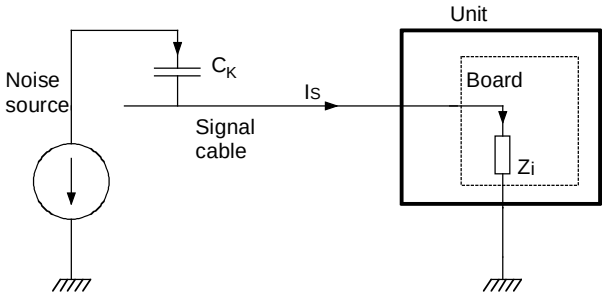

Fig. 3-5 Capacitive coupling for non-shielded signal cables

Noise current I_S produces a voltage drop across impedance Z_i. If the noise current flows through a board with fast electronic components (e.g. microprocessor), even a small spike in the µs area and an amplitude of just a few volts can lead to disturbing noise.

Measures to increase noise immunity

The most effective way of preventing noise being coupled-in is to rigorously **separate power and signal cables.**

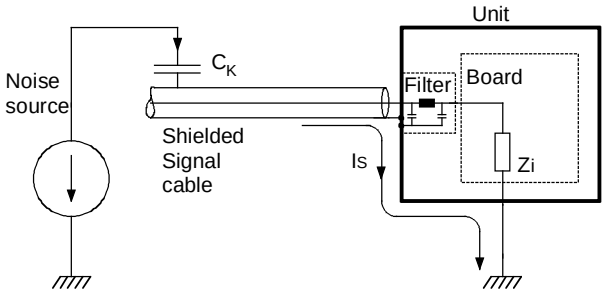

Fig. 3-6 Increasing the noise immunity by using shielded signal cables

The inputs and outputs of the SIMOVERT MASTERDRIVES control section are fitted with filters that keep noise currents I_S separate from the electronics. The filters also smooth the useful signal. In the case of signal cables with extremely high-frequency signals, e.g. from the digital tachometer, this smoothing has a disturbing effect. As no smoothing is possible on account of its functionality, **shielded signal cables** have to be used here. The noise current now flows back to the noise source via the shield and the housing.

The shields of **digital signal cables** always have to be connected at both ends, i.e. at the transmitter and at the receiver!

In the case of **analog signal cables,** low-frequency noise can arise if the shield is connected at both ends (hum is coupled-in). In this case, the shield must only be connected at one end at the SIMOVERT MASTERDRIVES. The other end of the shield should be grounded through a capacitor (e.g. 10 nF/100 V type MKT). This capacitor enables the shield to be connected at both ends after all as far as high-frequency noise is concerned.

3.4 EMC planning

If two units are not electromagnetically compatible, the noise radiated by the noise transmitter can be reduced, or the noise immunity of the noise receiver can be increased. Noise sources are often power electronic units with a large current drain. Complex filters are necessary to reduce their noise emission. Noise receivers especially include control devices and sensors/transmitters, as well as their evaluation circuit. Not so much effort and cost is required to increase the noise immunity of low-power units. In industrial environments, it is therefore more cost-effective to increase the noise immunity than to reduce the noise emission.

To maintain the "Second environment" limit value class specified in EN 55011, the radio interference voltage at the mains connection point can be a maximum of 79 dB (µV) between 150 kHz and 500 kHz, and a maximum of 73 dB (µV) between 500 kHz und 30 MHz. When expressed in volts, these values are 9 mV and 4.5 mV respectively!

Before radio interference measures can be applied, it must first be clarified at which locations you or your customer require EMC. See the following example:

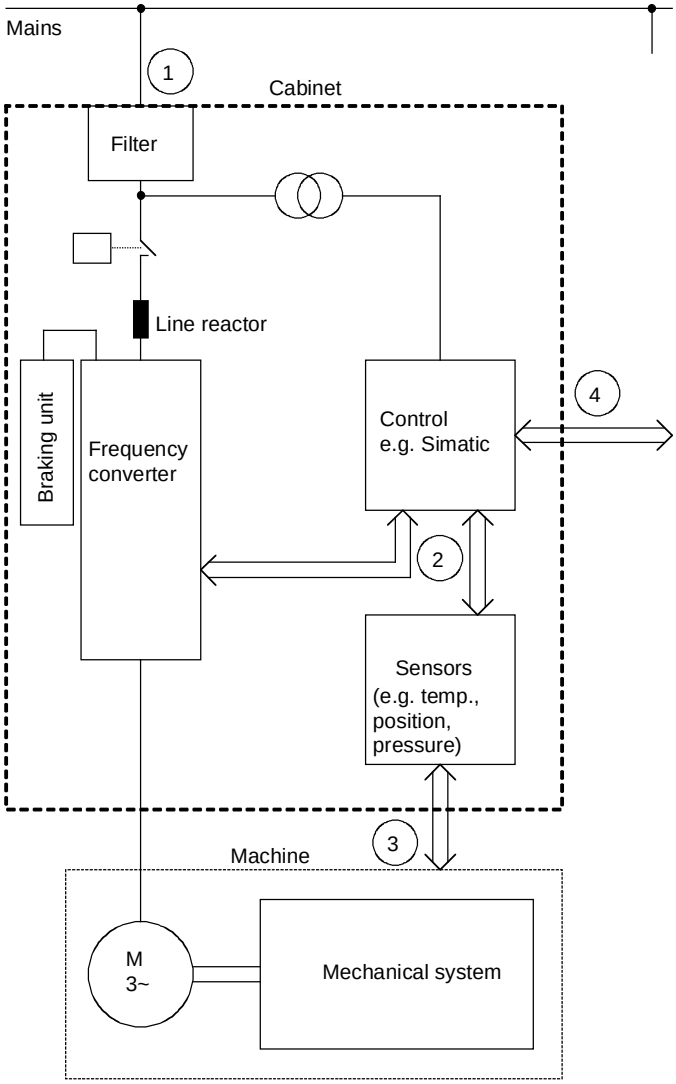

Fig. 3-7 Block diagram of a drive system

The purpose of a frequency converter is to drive a motor. The frequency converter, the relevant open-loop control and sensor system are accommodated in a cabinet. The emitted noise has to be limited at the mains connection point and therefore radio interference suppression filters and line reactors are installed in the cabinet.

Assuming that all requirements are met at Point ① - can it be supposed that electromagnetic compatibility exists?

This question cannot just be answered with "yes" because EMC has to be reliably ensured inside the cabinet as well. It is possible that the control system produces electromagnetic influences at interfaces ② and ④, and the sensor system at interfaces ② and ③.

Therefore, a radio interference suppression filter by itself cannot ensure EMC!

See the following sections.

3.4.1 The zone concept

The most cost-effective measure of reducing interference is to spatially separate the noise sources and the noise receivers. This must, however, already be taken into account during the planning stage of a machine/system. The first question that has to be answered is whether the unit used is a noise source or a noise receiver. Noise sources in this connection are, for example, frequency converters, braking units, contactors.

Noise receivers are, for example, automation devices, encoders and sensors.

The machine/system is then divided up into EMC zones and the units are assigned to these zones. Each zone has its own requirements regarding noise emission and noise immunity. The zones have to be spatially separated, which is best done using a metal housing or, within a cabinet, using grounded partitions. If necessary, filters have to be used at the zone interfaces. The zone concept is explained using the following diagram as an example which shows a simplified drive system:

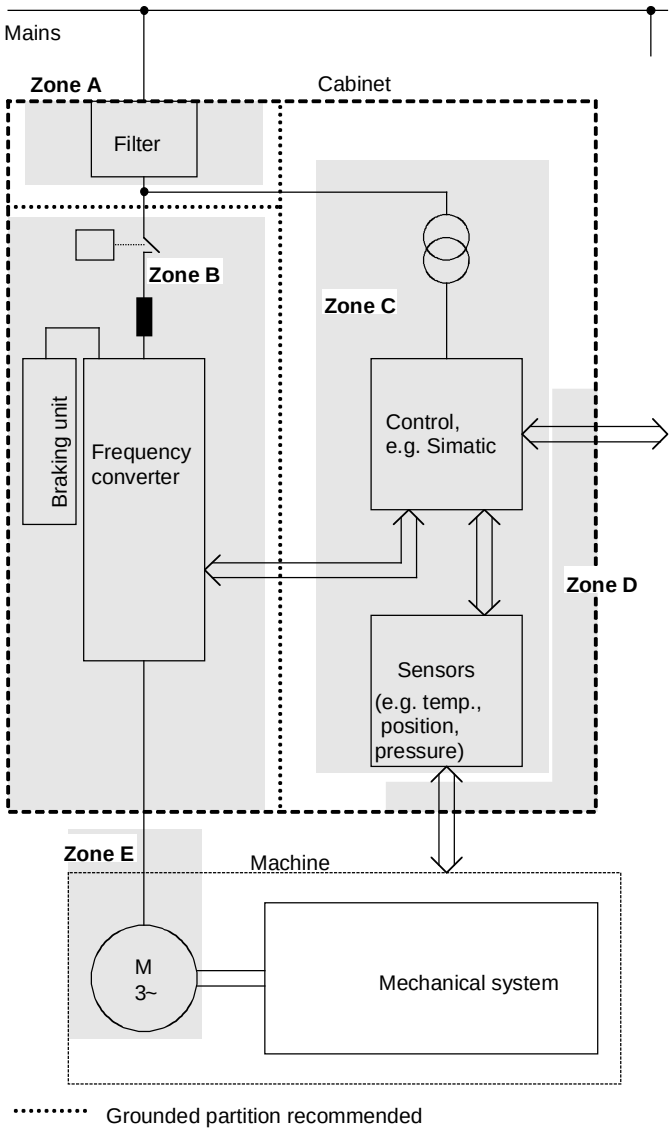

Fig. 3-8 Sub-dividing a drive system into zones

- Zone A is the cabinet connection to the line supply including filter. The emitted noise should be kept at specific limit values here.
- Zone B contains the line reactor and the noise sources: frequency converter, braking unit, contactor.
- Zone C accommodates the control transformer and the noise receivers: control and sensor system.
- Zone D forms the interface between the signal and control cables to the periphery. A defined noise immunity level is required here.
- Zone E comprises the three-phase motor and the motor supply cable.
- The zones should be spatially separated in order to achieve electromagnetic de-coupling.

- Minimum clearance 20 cm.
- De-coupling by means of grounded partitions is even better. It is not permissible to route cables which have been assigned to various zones together in the same cable ducts!
- If necessary, filters should be installed at the interface locations between the zones.
- Non-shielded signal cables can be used within one zone.
- All bus cables (e.g. RS 485, RS 232) and signal cables leaving the cabinet must be shielded.

3.4.2 Use of filters and coupling elements

EMC cannot be brought about just by installing filters! Measures such as shielded motor feeder cables and spatial separation are also necessary.

Radio interference suppression filters

Radio interference suppression filters reduce the cable-related noise interference voltage at the mains connection point. In order to maintain the limit values ("First environment" or "Second environment"), a radio interference suppression filter is necessary, irrespective of whether a dv/dt or sinusoidal filter is used at the output of the frequency converter.

dv/dt filters

dv/dt filters are used in the first place to protect the motor winding, by reducing the maximum voltage stressing, and in the second place, the reduced voltage gradient will result in a lower noise current.

Sinusoidal filters

Sinusoidal filters are low-pass filters which generate an almost sinusoidal voltage from the voltage blocks which the converter switches at the output terminals. The voltage gradient and the maximum voltage peaks are limited even more effectively than in the case of dv/dt filters.

Coupling elements

In addition, data line filters and/or coupling elements may be required at the interfaces between the zones. Coupling elements with electrical isolation (e.g. isolating amplifiers) prevent the noise from being propagated from one zone to the next. Isolating amplifiers particularly have to be provided in the case of analog signals.

3.5 Design of drives in conformance with EMC regulations

3.5.1 Basic EMC rules

Rules 1 to 13 are generally applicable. Rules 14 to 20 are particularly important for limiting noise emission.

Rule 1 All of the metal cabinet parts must be connected through the largest possible surface areas (not paint on paint). If required, use serrated washers. The cabinet door must be connected to the cabinet through grounding straps which must be kept as short as possible.

NOTE Grounding installations/machines is essentially a protective measure. However, in the case of drive systems, this also has an influence on the noise emission and noise immunity. A system can either be grounded in a star configuration or each component grounded separately. Preference should be given to the latter grounding system in the case of drive systems, i.e. all parts of the installation to be grounded are connected through their surface or in a mesh pattern.

Rule 2 Signal cables and power cables must be routed separately (to eliminate coupled-in noise). Minimum clearance: 20 cm. Provide partitions between power cables and signal cables. The partitions must be grounded at several points along their length.

Rule 3 Contactors, relays, solenoid valves, electromechanical operating hours counters, etc. in the cabinet must be provided with quenching elements, for example, RC elements, diodes, varistors. These quenching devices must be connected directly at the coil.

Rule 4 Non-shielded cables associated with the same circuit (outgoing and incoming conductor) must be twisted, or the surface between the outgoing and incoming conductors kept as small as possible in order to prevent unnecessary coupling effects.

Rule 5 Eliminate any unnecessary cable lengths to keep coupling capacitances and inductances low.

Rule 6 Connect the reserve cables/conductors to ground at both ends to achieve an additional shielding effect.

Rule 7 In general, it is possible to reduce the noise being coupled-in by routing cables close to grounded cabinet panels. Therefore, wiring should be routed as close as possible to the cabinet housing and the mounting panels and not freely through the cabinet. The same applies for reserve cables/conductors.

Rule 8 Tachometers, encoders or resolvers must be connected through a shielded cable. The shield must be connected to the tachometer, encoder or resolver and at the SIMOVERT MASTERDRIVES through a large surface area. The shield must not be interrupted, e.g. using intermediate terminals. Pre-assembled cables with multiple shields should be used for encoders and resolvers (see Catalog DA65).

Rule 9

The cable shields of digital signal cables must be connected to ground at both ends (transmitter and receiver) through the largest possible surface area. If the equipotential bonding is poor between the shield connections, an additional equipotential bonding conductor with at least 10 mm² must be connected in parallel to the shield, to reduce the shield current. Generally, the shields can be connected to ground (= cabinet housing) in several places. The shields can also be connected to ground at several locations, even outside the cabinet.

Foil-type shields are not to be favoured. They do not shield as well as braided shields; they are poorer by a factor of at least 5.

Rule 10

The cable shields of **analog** signal cables can be connected to ground at both ends if the equipotential bonding is good. Good equipotential bonding is achieved if Rule 1 is observed.

If low-frequency noise occurs on analog cables, for example: speed/measured value fluctuations as a result of equalizing currents (hum), the shields are only connected for analog signals at one end at the SIMOVERT MASTERDRIVES. The other end of the shield should be grounded through a capacitor (e.g. 10 nF/100 V type MKT). However, the shield is still connected at both ends to ground for high frequency as a result of the capacitor.

Rule 11

If possible, the signal cables should only enter the cabinet at one side.

Rule 12

If SIMOVERT MASTERDRIVES are operated from an external 24 V power supply, this power supply must not feed several consumers separately installed in various cabinets (hum can be coupled-in!). The optimum solution is for each SIMOVERT MASTERDRIVES to have its own power supply.

Rule 13

Prevent noise from being coupled-in through the supply.

SIMOVERT MASTERDRIVES and automation units/control electronics should be connected-up to different supply networks. If there is only one common network, the automation units/control electronics have to be de-coupled from the supply using an isolating transformer.

Rule 14

The use of a radio interference suppression filter is obligatory to maintain limit value class "First environment" or "Second environment", even if sinusoidal filters or dv/dt filters are installed between the motor and SIMOVERT MASTERDRIVES.

Whether an additional filter has to be installed for further consumers, depends on the control used and the wiring of the remaining cabinet.

Rule 15

A noise suppression filter should always be placed close to the fault source. The filter must be connected to the cabinet housing, mounting panel, etc. through a large surface area. A bare metal mounting panel (e.g. manufactured from stainless steel, galvanized steel) is best, as electrical contact is established through the entire mounting surface. If the mounting panel is painted, the paint has to be removed at the screw mounting points for the frequency converter and the noise suppression filter to ensure good electrical contact.

The incoming and outgoing cables of the radio interference suppression filter have to be spatially separated/isolated.

Rule 16

In order to limit the noise emitted, all variable-speed motors have to be connected-up using shielded cables, with the shields being connected to the respective housings at both ends in a low-inductive manner (through the largest possible surface area). The motor feeder cables also have to be shielded inside the cabinet or at least shielded using grounded partitions. Suitable motor feeder cable e.g. Siemens PROTOFLEX-EMV-CY (4 x 1.5 mm^2 ... 4 x 120 mm^2) with Cu shield. Cables with steel shields are unsuitable.

A suitable PG gland with shield connection can be used at the motor to connect the shield. It should also be ensured that there is a low-impedance connection between the motor terminal box and the motor housing. If required, connect-up using an additional grounding conductor. **Do not use plastic motor terminal boxes!**

Rule 17

A line reactor has to be installed between the radio interference suppression filter and the SIMOVERT MASTERDRIVES.

Rule 18

The line supply cable has to be spatially separated from the motor feeder cables, e.g. by grounded partitions.

Rule 19

The shield between the motor and SIMOVERT MASTERDRIVES must not be interrupted by the installation of components such as output reactors, sinusoidal filters, dv/dt filters, fuses, contactors. The components must be mounted on a mounting panel which simultaneously serves as the shield connection for the incoming and outgoing motor cables. Grounded partitions may be necessary to shield the components.

Rule 20

In order to limit the radio interference (especially for limit value class "First environment "), in addition to the line supply cable, all cables externally connected to the cabinet must be shielded.

Examples of these basic rules:

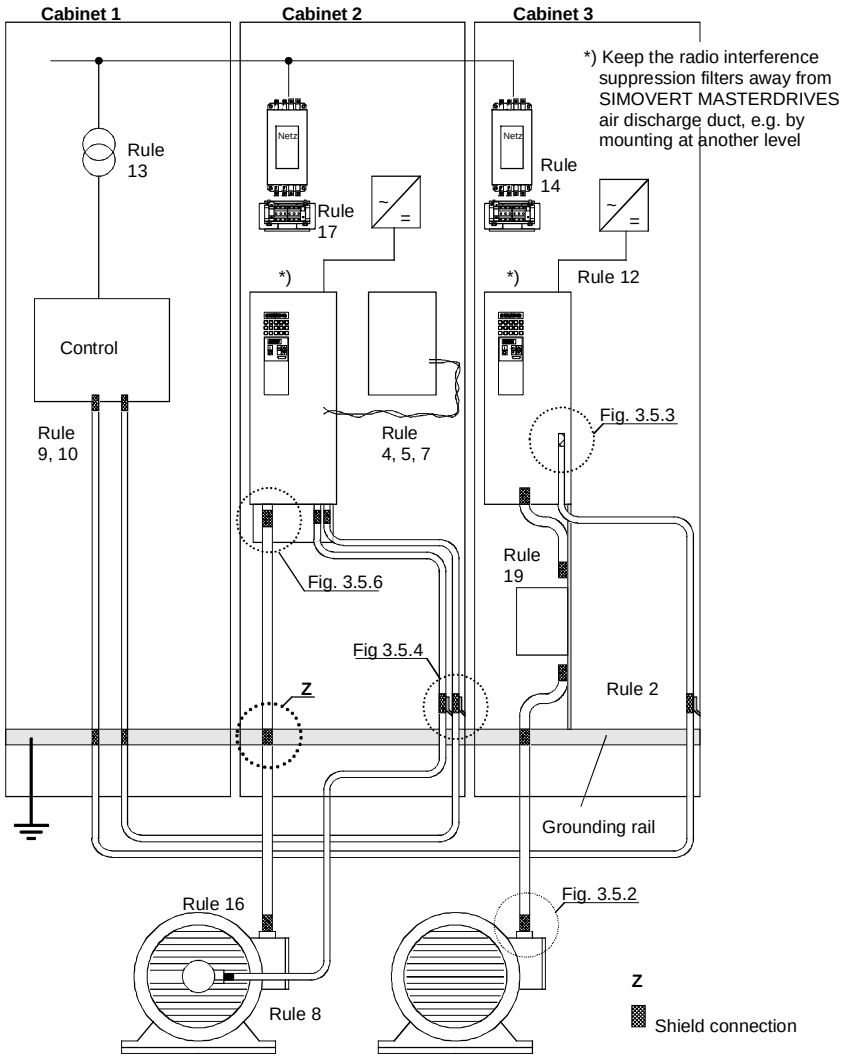

Fig. 3-9 Examples for applying the basic EMC rules

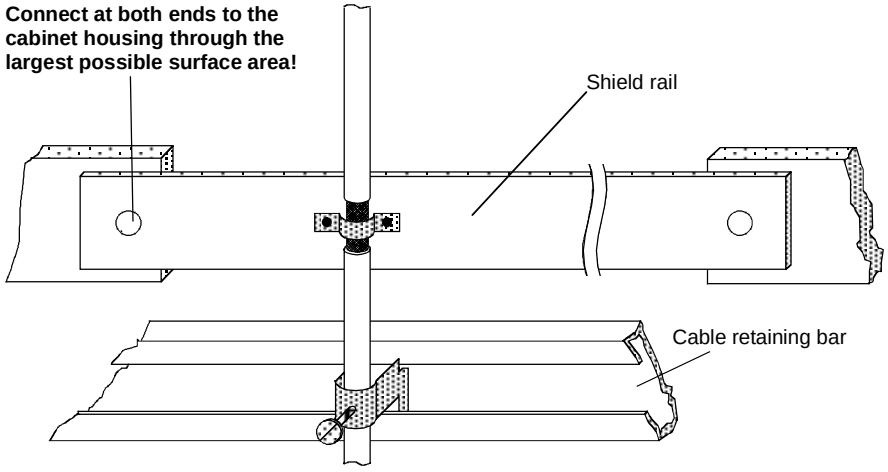

Fig. 3-10 Connecting the motor cable shield where the cable enters the cabinet

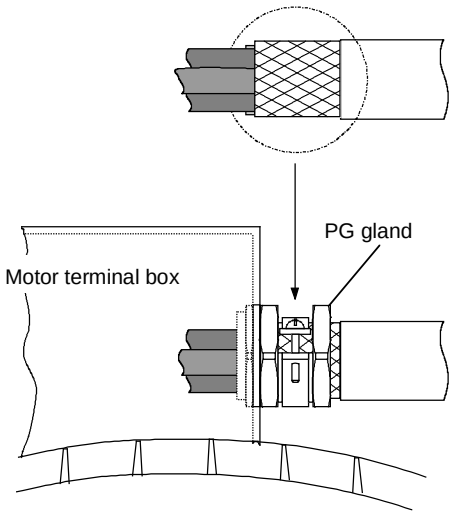

Fig. 3-11 Shield connection at the motor

The shield can be connected through a PG gland (nickel-plated brass) with a strain relief bar. Thus, the degree of protection IP 20 can be achieved.

For higher degrees of protection (up to IP 68), there are special PG glands with shield connection, e.g.:

- SKINDICHT SHVE, Messrs. Lapp, Stuttgart
- UNI IRIS Dicht or UNI EMV Dicht, Messrs. Pflitsch, Hückeswagen

It is not permissible to use plastic motor terminal boxes!

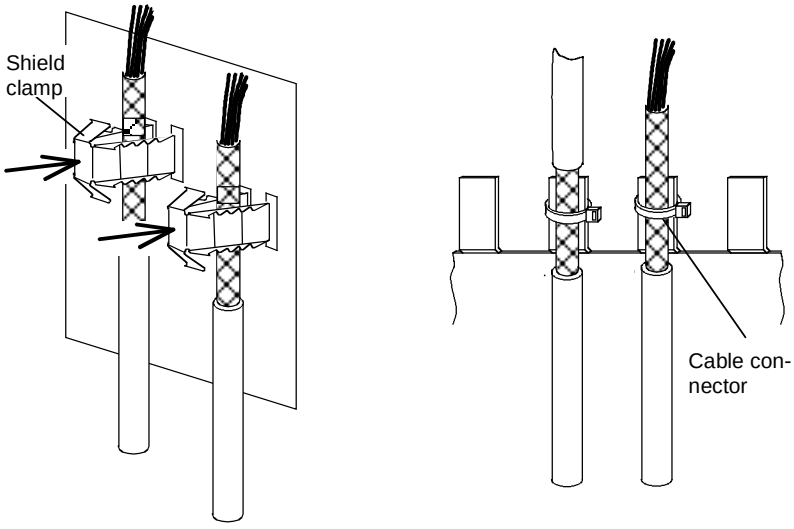

Fig. 3-12 Connecting the signal cable shields for SIMOVERT MASTERDRIVES

- Every SIMOVERT MASTERDRIVES has shield clamps to connect the signal cable shields.
- For chassis units (sizes ≥ E), the shields can be additionally connected using cable connectors at the shield connecting locations.

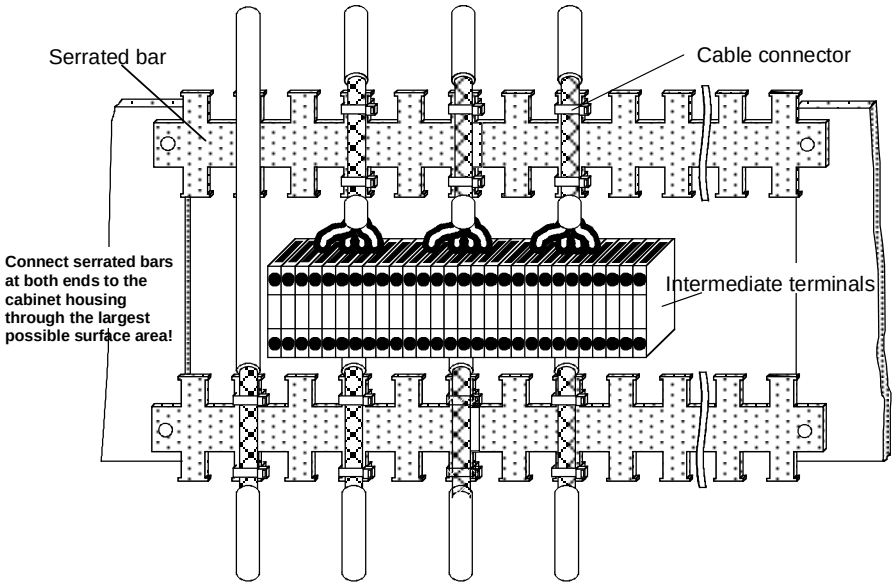

Fig. 3-13 Connecting signal cable shields in the cabinet

Wherever possible, intermediate terminals should not be used as they reduce the shielding effect!

3.5.2 Examples

Compact PLUS type drive

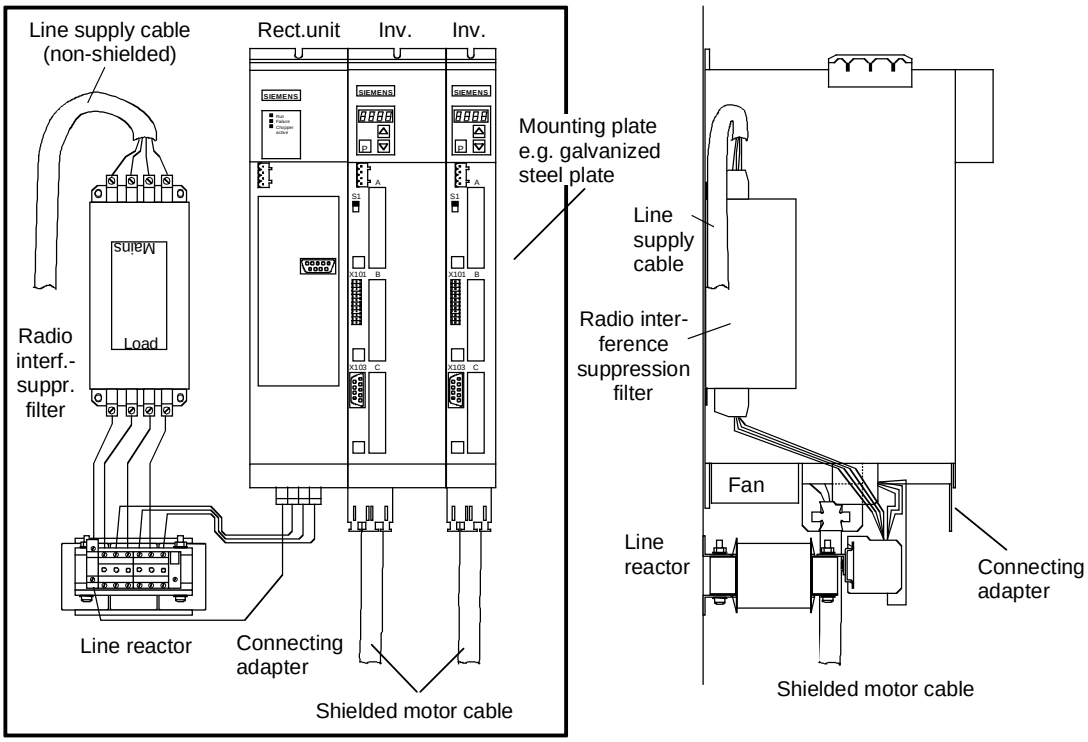

Fig. 3-14 Example of a Compact PLUS type unit with radio interference suppression filter and line reactor

The cabling should be kept as short as possible. The line supply cable to the radio interference suppression filter must be routed separately away from other cables (zone concept!).

The motor must be connected using a shielded cable! The shield has to be connected through the largest possible surface area at the motor and the inverter.

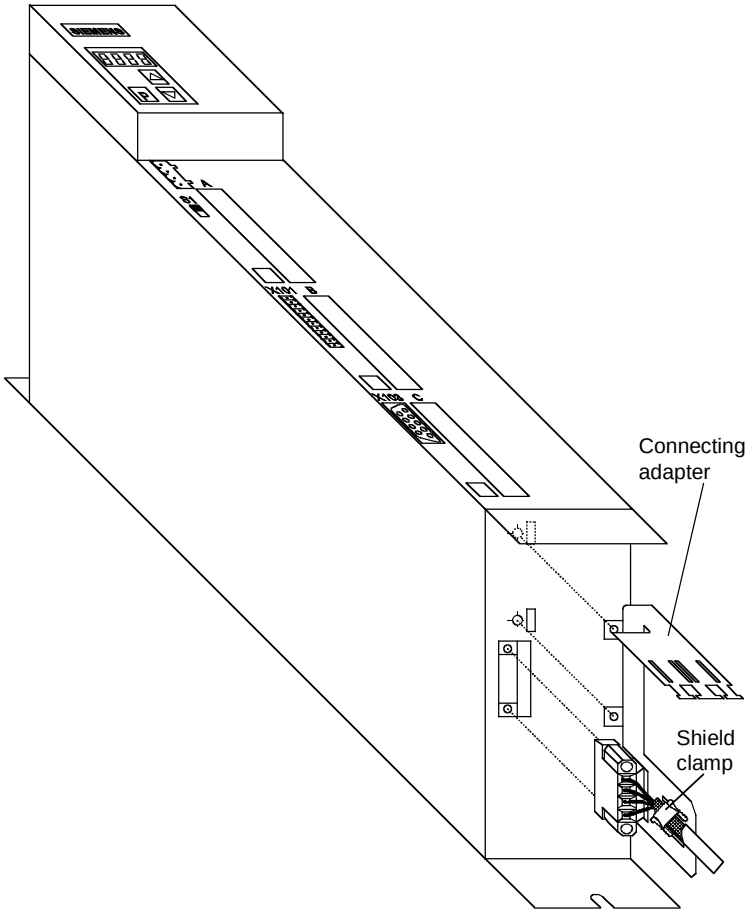

Fig. 3-15 Installing the motor connection and the connecting adapter

The following procedure should be carried out to connect the motor cable and to mount the shield:

- First connect the motor cable to the removed X2 motor connector
- Connect the shield of the motor cable through the largest possible surface area at the connecting adapter, e.g. with shield clamps.
- Insert the fastening straps of the connecting adapter through the slots in the lower housing section and screw them into place.
- Locate the motor connector X2 and screw tightly to the unit.

The control cables can be attached at the front of the connecting adapter using shield clamps.

Drive unit of Compact type

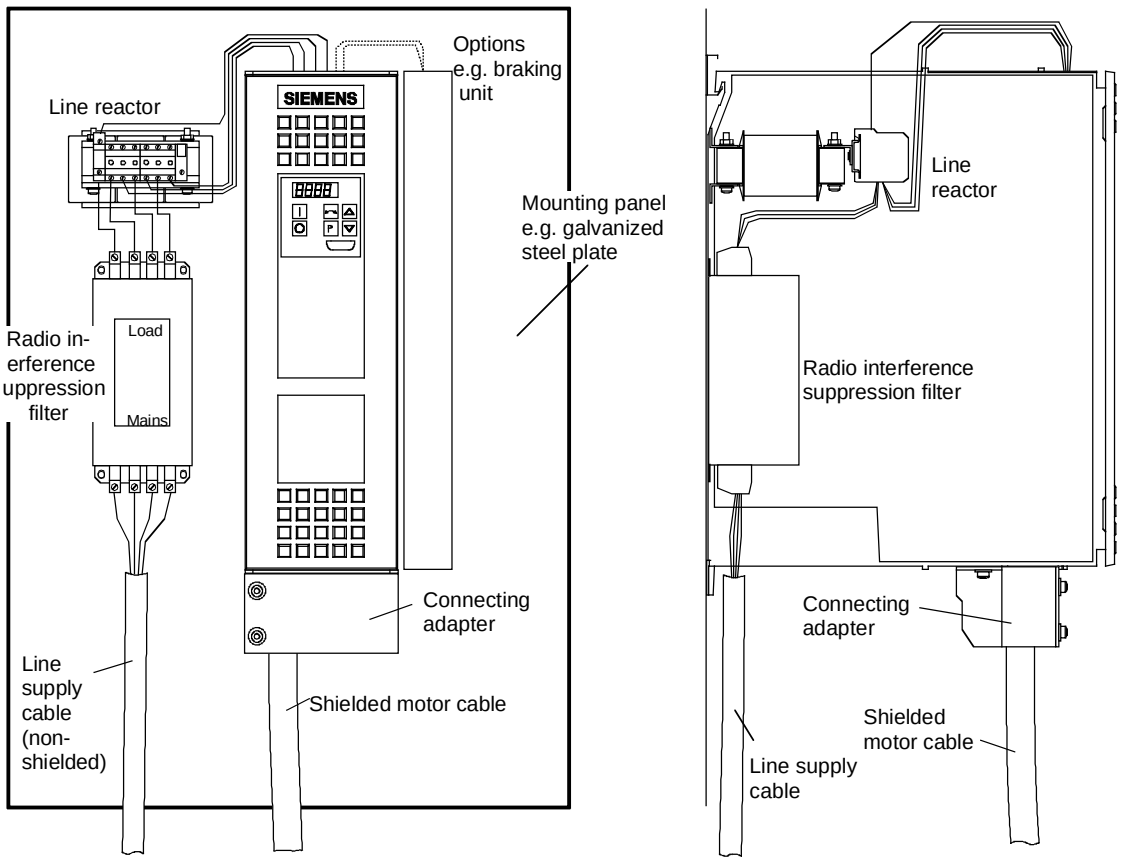

Fig. 3-16 Example of a Compact type unit with radio interference suppression filter and line reactor

The cabling should be kept as short as possible. The line supply cable to the radio interference suppression filter must be routed separately away from other cables (zone concept!).

The motor must be connected using a shielded cable! The shield must be connected through the largest possible surface area at the motor and drive converter. The optional connecting adapter can be used to connect the shield to SIMOVERT MASTERDRIVES.

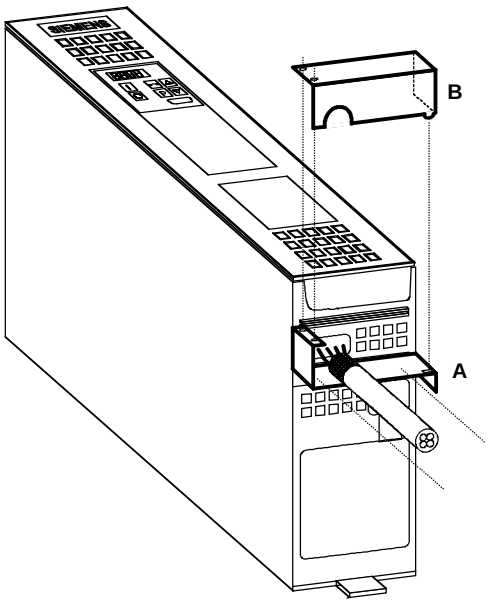

Fig. 3-17 Mounting the connecting adapter

- Screw lower section A to SIMOVERT MASTERDRIVES.
- Mount SIMOVERT MASTERDRIVES on the mounting panel.
- Connect the shielded motor cable and shield to section A through the largest possible surface area, e.g. attach using cable connectors.
- Locate upper part B and screw into place. The shields of signal cables can be connected to the upper section.

Chassis type drive unit

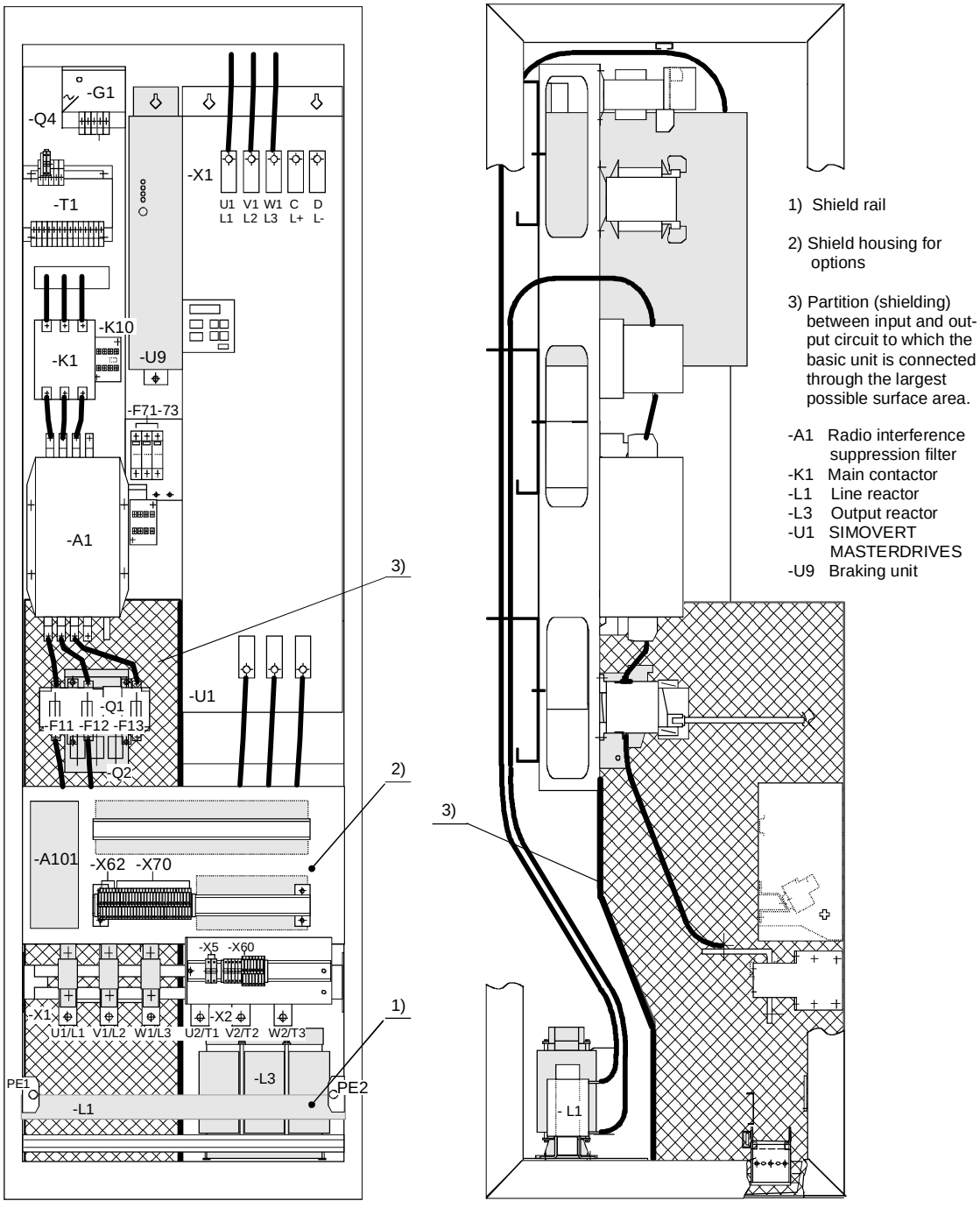

Fig. 3-18 Example of a chassis unit mounted in the cabinet with radio interference suppression filter and line reactor

Example of correct cable routing

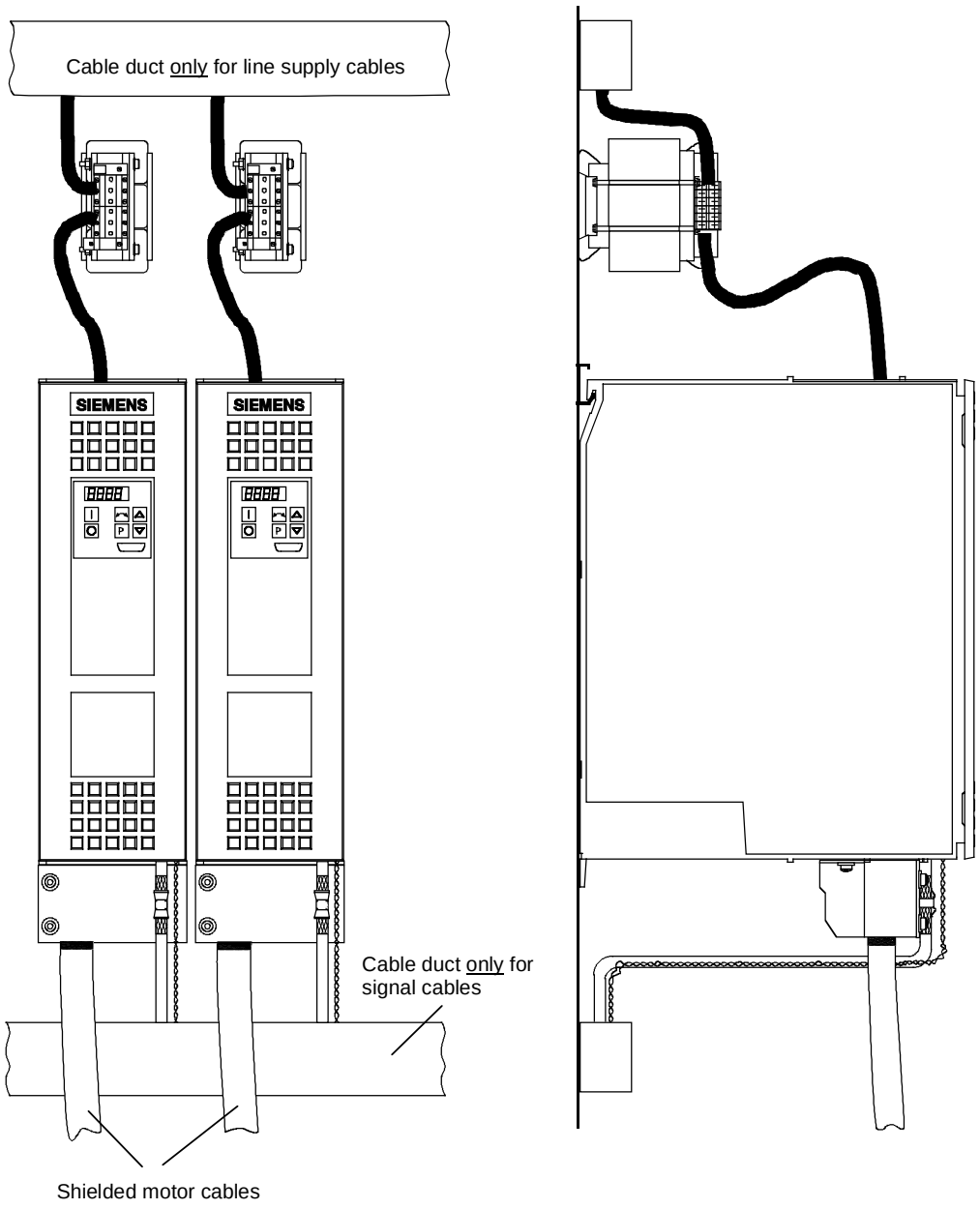

Fig. 3-19 Installation with separate cable ducts

Installation with cable ducts only for the line supply cables. Line supply cables are non-shielded.

The motor and signal cables are routed separately from each other.

The shields of the motor and signal cables have to be mounted on the shield connections through the largest possible surface area.

Example of incorrect cable routing

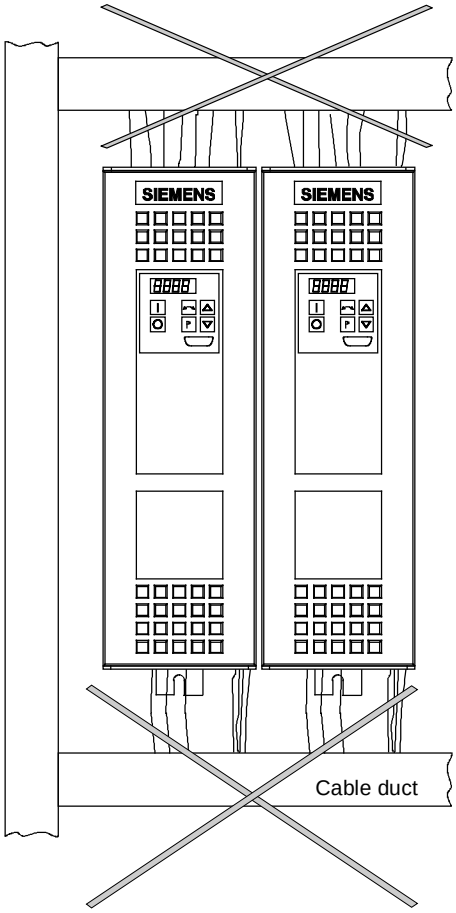

Fig. 3-20 Installation with cable ducts

Installation with cable ducts, mounted on a painted mounting panel. All of the cables are non-shielded.

Optically this layout looks good.

But from an EMC perspective, this installation is useless!

The motor and signal cables are routed in parallel in the lower cable duct. The same is true for line supply cables and external power supplies in the upper cable duct. All of the cables are then routed together in the vertical cable duct.

Cabling such as this allows noise to be easily propagated and coupled-in!

3.6 Assignment of SIMOVERT MASTERDRIVES, radio interference suppression filters and line reactors

The assignment of SIMOVERT MASTERDRIVES, radio interference suppression filters and line reactors is specified in Catalog DA 65.1 and DA 65.11 and the Operating Instructions for the 6SE70 radio interference suppression filters.

The 6SE70 radio interference suppression filters were checked to make sure they maintain the limit values, using layouts consisting of SIMOVERT MASTERDRIVES and the associated line reactors. The components were mounted in cabinets (Type 8MC) in observance of the specified rules. The motor feeder cable was 30 m long.

3.7 Specified standards

EN 55011:	1991	Limits and methods of measurement of radio disturbance characteristics of industrial, scientific and medical (ISM) radio-frequency equipment
EN 50081-1:	1992	Generic emission standard Part 1: Residential, commercial and light industry
EN 50081-2:	1993	Generic emission standard Part 2: Industrial environment
EN 50082-1:	1992	Generic immunity standard Part 1: Residential, commercial and light industry
EN 50082-2:	1995	Generic immunity standard Part 2: Industrial environment
EN 61800-3:	1996	EMC product standard including special test methods for variable-speed electric drive units

4 Function blocks and parameters

Control functions

A large number of open-loop and closed-loop control functions, communication functions, as well as diagnostics and operator control functions are implemented in the software of the converters and inverters by means of function blocks. These function blocks can be parameterized and freely interconnected.

The interconnection method can be compared with electrical circuit engineering where various function units, e.g. integrated circuits or other components are interconnected by cables.

The difference is, however, that function blocks are interconnected not by cables, but via software.

4.1 Function blocks

Functions are implemented in function blocks. The function scope of the individual function blocks depends on its special task.

The function blocks are provided with inputs, outputs and parameters and are processed in time slots.

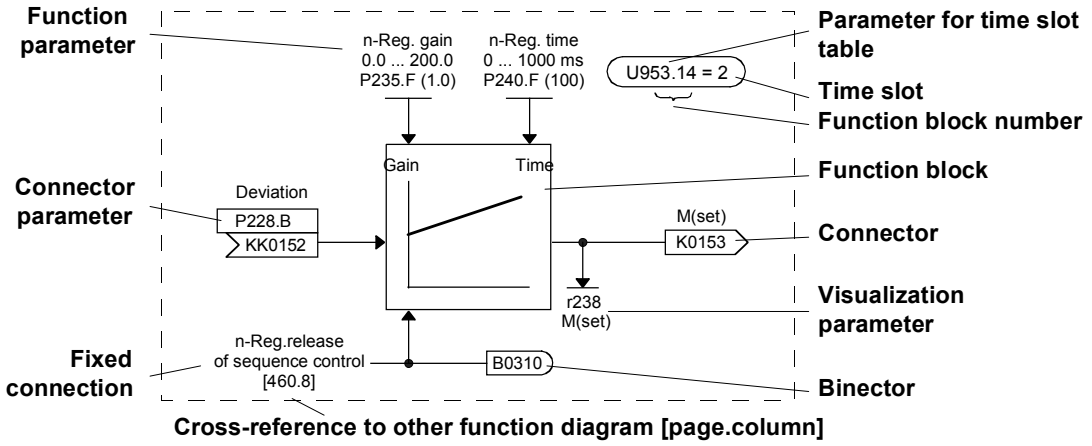

Fig. 4-1 A function block

Function block number

Each function block has a function block number (FB number) by which it can be clearly identified. With the FB number, you can define which time slot can be used for processing a large number of function blocks. For this purpose, each function block is allocated an indexed parameter which contains the relevant FB number in its parameter number and its parameter index.

Example:

U950.01 is the code of FB number 001
U953.50 is the code of FB number 250
U953.99 is the code of FB number 299
U954.74 is the code of FB number 374

The parameter for selecting the time slot as well as the corresponding factory setting are indicated in the function diagrams for each function block. This data takes the form of an ellipse in order to distinguish it optically from the other elements of a function block.

In addition to the time slot, the processing sequence can also be determined for most of the function blocks.

4.2 Connectors and binectors

Connectors and binectors are elements which are used to exchange signals between individual function blocks. They are each cyclically filled by function blocks with one signal value. Other function blocks can then call up these values, depending on parameterization.

Connectors

Connectors can be likened to storage locations which are used to archive "analog" signals. They are clearly designated. Each connector designation comprises the connector name, the connector number and an identification letter.

The identification letter depends on the numerical representation:

- K Connector with word length (16 bit)
- KK Connector with double-word length (32 bit, increased accuracy)

The connector number always has four digits.

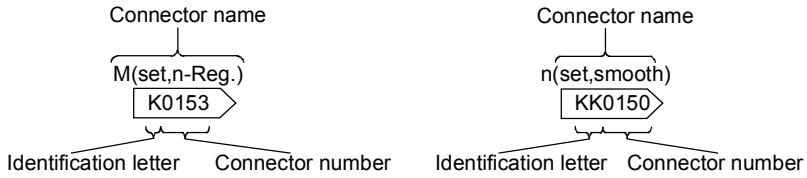

Fig. 4-2 Connectors with word lengths of 16 bit and 32 bit

Value range of the connectors

The values stored in the connectors are normalized values, with a few exceptions (e.g. connectros for control words).

The value range of these connectors covers a percentage value range of:

- -200 % (8000H / 8000 0000H for double-word connectors) to
- +199,99 % (7FFFH / 7FFF FFFFH for double-word connectors).

100 % corresponds to the value 4000H (4000 0000H for double-word connectors).

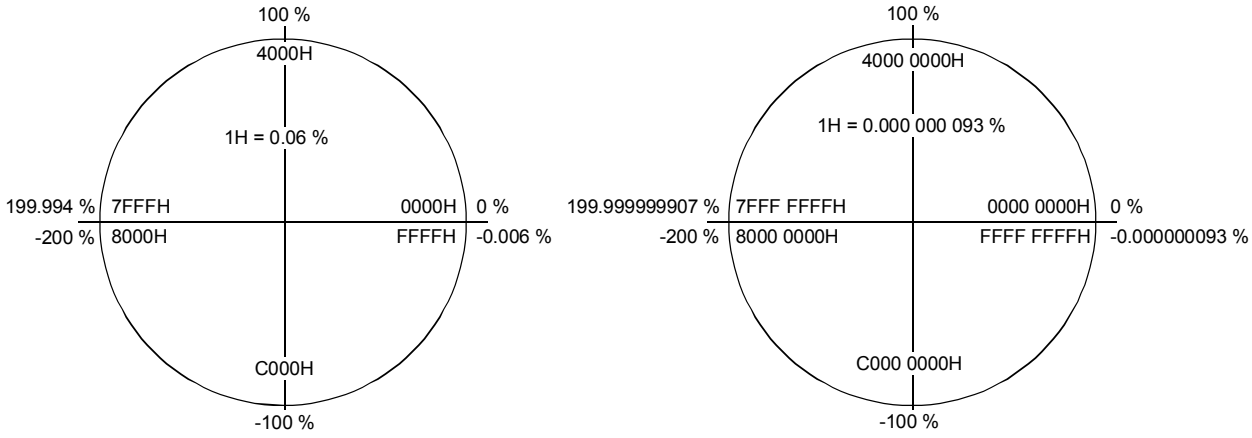

Fig. 4-3 Value range and assignment of the figure ranges for connectors

Binectors

Function blocks archive the **bi**nary (digital) output information in binary con**nectors**, the binectors. Binectors can therefore be likened to storage locations used for storing binary signals. They are clearly identified. Each binector designation comprises the binector name, the binector number and an identification letter. The identification letter is B.

The binector number always has four digits.

On account of their definition, binectors can only assume the two states "0" (logically no) and "1" (logically yes).

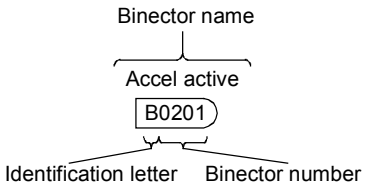

Fig. 4-4 Binectors

4.3 Parameters

Parameters are the intervention points for adapting function blocks to an application, for interconnecting function blocks via connectors and binectors and for visualizing internal signals.

The various parameters are differentiated according to their function as follows:

- Function parameters (can be read and written)
- BICO parameters (can be read and written)
- Visualization parameters (can only be read).

Each parameter is clearly designated.The parameter designation comprises the parameter name and the parameter number, and enables every parameter to be clearly identified. In addition to the parameter name and the parameter number, many parameters also have a parameter index. With the aid of this index, it is possible to store several values for one parameter under one parameter number.

The function diagrams indicate the factory setting for every BICO parameter and every function parameter. They further indicate the value ranges for the changeable function parameters.

Parameter numbers on the PMU

The parameter numbers shown on the parameterizing unit (PMU) which is directly mounted on the unit consist of a letter and a three-digit number.

The following applies for the letters:

- Upper-case letters (P, U, H and L) represent the BICO parameters and function parameters which can be changed
- Lower-case letters (r, n, d and c) represent the visualization parameters which cannot be changed.

The three-digit number covers the value range from 000 to 999; but not all values are used.

Parameter numbers on the OP1S

The OP1S operator control panel enables parameters to be selected directly by their parameter numbers. As the OP1S only has a numerical keypad, the parameter number must be replaced by a figure when input. The following replace mode is applicable:

- "P"xxx and "r"xxx are replaced by "0"xxx
- "H"xxx and "d"xxx are replaced by "1"xxx
- "U"xxx and "n"xxx are replaced by "2"xxx
- "L"xxx and "c"xxx are replaced by "3"xxx

Examples:

Select r004 on OP1S: Input 0004
Select P050 on OP1S: Input 0050
Select U123 on OP1S: Input 2123
Select L411 on OP1S Input 3411

Function parameters

The response of a function block is determined by function parameters. Typical examples of function parameters are:

- Normalization of an input signal
- Acceleration or deceleration times in the ramp-function generator
- Proportional gain (Kp) and integral time (Tn) in the speed controller.

Function parameters can be indexed. The significance of the parameter values stored in the various indices depends on the definition of the respective parameter. A special group is formed by the function parameters which are part of the so-called function data sets.

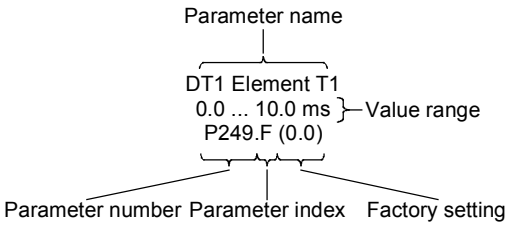

Fig. 4-5 Function parameters

Function data sets (Setpoint data sets)

Special function parameters are put together in function data sets. These parameters are marked in the function diagrams with the parameter index **.F**.

The parameters concerned are indexed four-fold, which means that one parameter value can be stored under each parameter index, i.e. a total of four parameter values can be stored.

The active function data set determines which value is currently being used. If function data set 1 is active, the parameter value stored in parameter index 1 is used. If function data set 2 is active, the parameter value stored in parameter index 2 is used, etc.

Example:

P462.1 = 0.50
P462.2 = 1.00
P462.3 = 3.00
P462.4 = 8.00

A total of 4 values are stored under parameter P462 (Accel Time). If function data set 1 is active, the acceleration time is 0.50 secs. If function data set 2 is active, the acceleration time is 1.00 secs. If function data set 3 is active, the acceleration time is 3.00 secs and if function data set 4 is active, the acceleration time is 8.00 secs.

The individual function data sets are selected by means of control word bits 16 and 17 in control word 2 (P576.B and P577.B). Changeover is possible at any time.

The active function data sets are displayed via the visualization parameter r013 (Active FuncDSet).

CAUTION

Changeover of all the indexed parameters of the function data sets between parameter indices 1, 2, 3 and 4 is always effected jointly.

BICO parameters

With BICO parameters, you can determine the sources of the input signals of a function block. This means that you can use BICO parameters to define the connectors and binectors from which a function block reads in its input signals. In this manner, you can "soft-wire" the function blocks stored in the units to meet your requirements. This is referred to as the BICO system.

For every BICO parameter, the type of input signals (connector or binector) which you can connect to the inputs is specified. BICO parameters have the following identification:

- B Binector parameter
  for connecting binectors
- K Connector parameter
  for connecting connectors with word length (16 bit)
- KK Connector parameter
  for conneting connectors with double-word length (32 bit)

Reciprocal "softwiring" of binectors and connectors is not permitted. However, you can always connect connector with word length and double-word length to the connector parameters.

BICO parameters are available in two forms; they can either be

- non-indexed, or
- double-indexed.

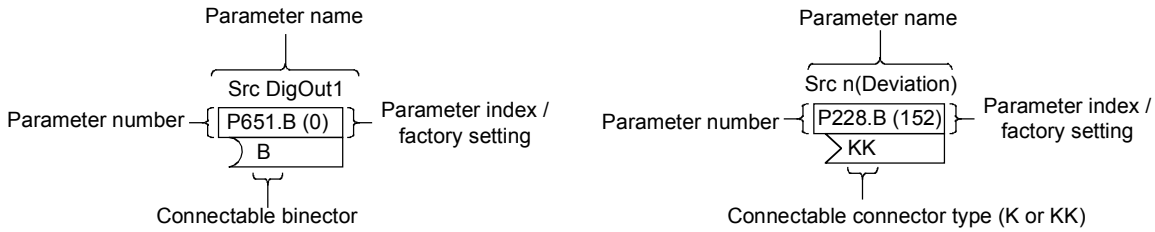

Fig. 4-6 Binector and connector parameters

BICO data sets (Basic/reserve data sets)

Selected BICO parameters are put together in BICO data sets. These parameters are marked in the function diagrams with the parameter index **.B.**

The parameters concerned are double-indexed, which means that one parameter value can be stored under each parameter index of these parameters, i.e. a total of two parameter values can be stored.

The active BICO data set determines which value is currently being used. If BICO data set 1 is active, the parameter value stored in parameter index 1 is used. If BICO data set 2 is active, the parameter value stored in parameter index 2 is used.

Example:

P554.1 = 10
P554.2 = 2100

A total of 2 values are stored under parameter P554 (Src ON/OFF1). If BICO data set 1 is active, the ON command comes from digital input 1 of the basic unit. If BICO data set 2 is active, the ON command comes from bit 0 of the first data word received by serial interface 1.

Individual BICO data sets are selected by means of control word bit 30 in control word 2 (P590.

The active BICO data set is displayed via visualization parameter r012 (Active BICO DS).

CAUTION

All indexed BICO parameters are always switched jointly between parameter index 1 and 2.

Visualization parameters

Visualization parameters are used for visualizing internal quantities (e.g. applicable output current). These parameters are only displayed and cannot be changed by you.

To distinguish them from the other parameters, they are designated with a lower-case letter (r, n, d and c) in the parameter number.

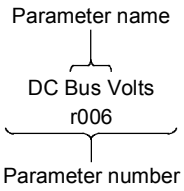

Fig. 4-7 Visualization parameters

4.4 Connecting up function blocks (BICO system)

BICO system is the term used to descrbe the method of creating connections between function blocks. This is performed with the aid of **bi**nectors and **co**nnectors. The name **BICO** system is derived from these two terms.

A connection between two function blocks consists of a connector or binector on the one side, and a BICO parameter on the other side. The connection is always made from the point of view of the input of a function block. You must always assign an output to an input. Assigment is made by entering in a BICO parameter the number of the connector or the binector from which the required input signals are read in. You are allowed to enter the same connector and binector numbers several times in different BICO parameters and thus use output signals of one function block as input signals for several other function blocks.

Example:
In the following figure, connector K0152 is connected to connector parameter P228. For this purpose, you must assign the number of connector K0152 as the value to the connector parameter P228, i.e. in this case 152.

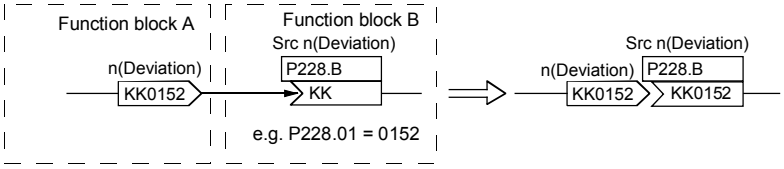

Fig. 4-8 Connecting two function blocks

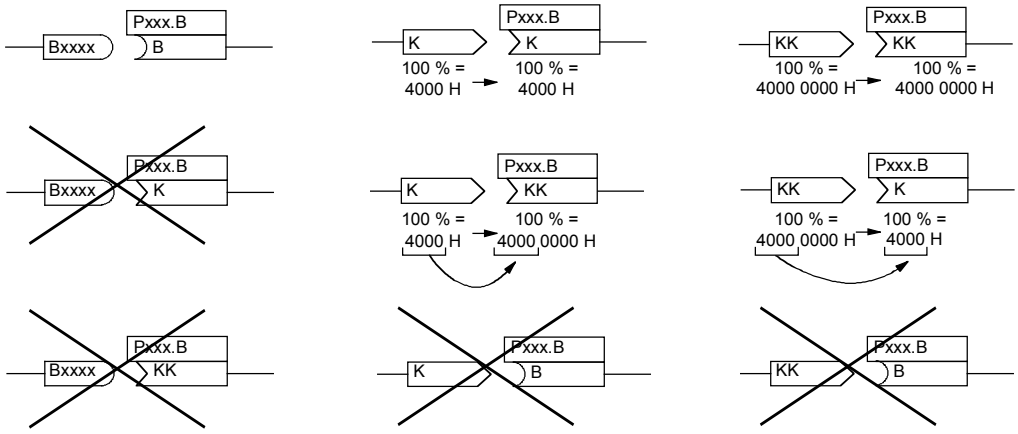

Fig. 4-9 Possible and impossible BICO connections

Interconnecting different connector types

Depending on their characteristics, connectors either have a length of a word (16 bit) or a double-word (32 bit). Accordingly, function blocks have BICO parameters which are suitable for connecting the respective connector type. It is, however, possible in principle to mix the types among the connectors. The word length is then automatically adjusted according to the following mode:

Interconnection of a word connector to	a word connector parameter	Value stays the same
	a double-word connector parameter	Value is taken over in high-word, low-word is filled up with 0000H
Interconnection of a double-word connector to	a word connector parameter	Value is taken over from high-word, low-word deleted
	a double-word connector parameter	Value stays the same

Table 4-1 Interconnecting different connector types

NOTE

When a double-word connector is interconnected to a word connector parameter, the signal resolution will drop from 32 bit to 16 bit. As the low-word is cut off, the information of the lower-order 16 bit of the double-word connectors is then lost.

5 Parameterization

5.1 Parameter menus

Parameters with related functions are compiled in menus for structuring the parameter set stored in the units. A menu thus represents a selection out of the entire supply of parameters of the unit.

It is possible for one parameter to belong to several menus. The parameter list indicates which individual menus a parameter belongs to. Assignment is effected via the menu number allocated to each menu.

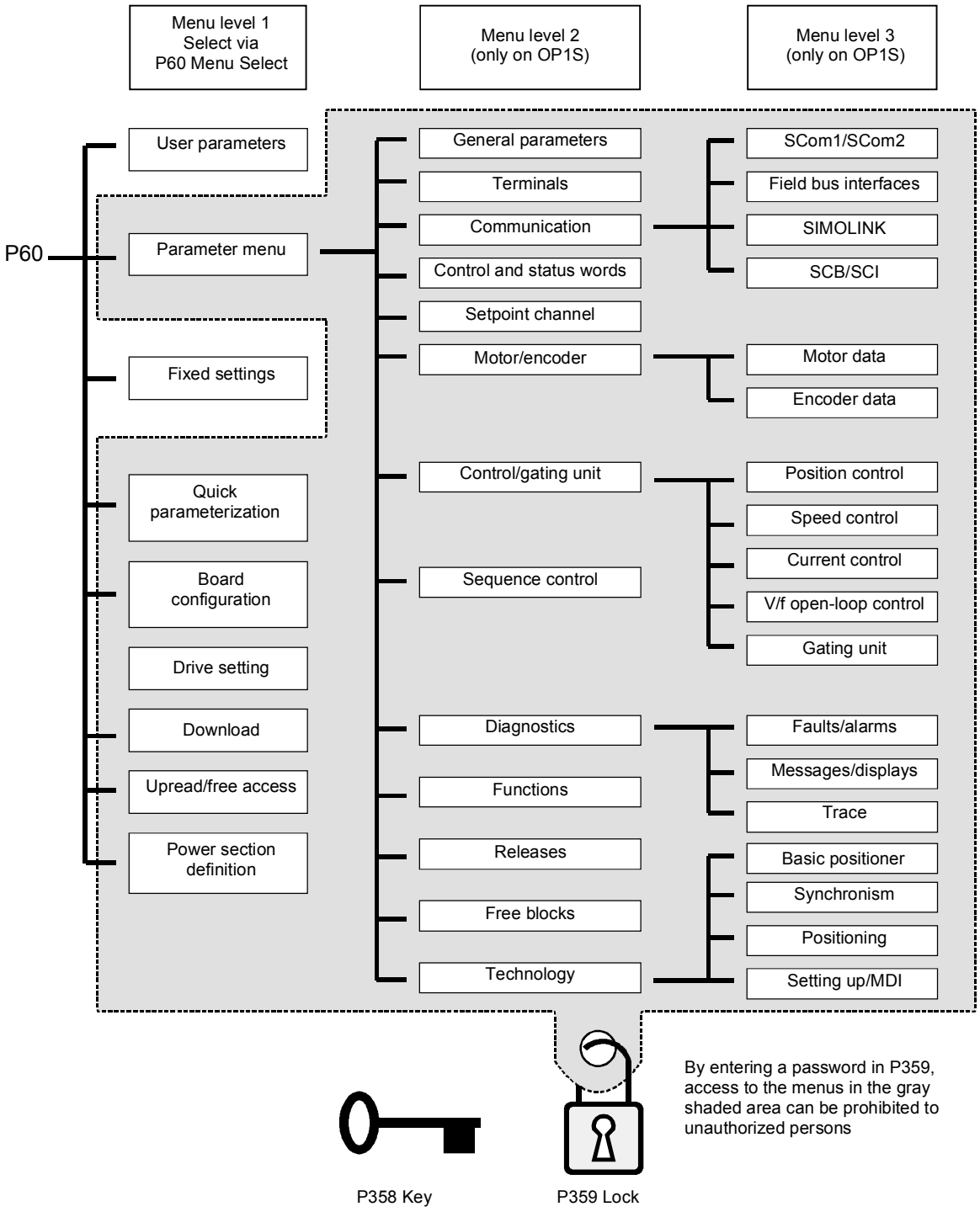

Fig. 5-1 Parameter menus

Menu levels

The parameter menus have several menu levels. The first level contains the main menus. These are effective for all sources of parameter inputs (PMU, OP1S, SIMOVIS / DriveMonitor, field bus interfaces).

The main menus are selected in parameter P60 Menu Selection.

Examples:
P060 = 0 "User parameters" menu selected
P060 = 1 "Parameter menu" selected
...
P060 = 8 "Power section definition" menu selected

Menu levels 2 and 3 enable the parameter set to be more extensively structured. They are used for parameterizing the units with the OP1S operator control panel.

Main menus

P060	Menu	Description
0	User parameters	• Freely configurable menu
1	Parameter menu	• Contains complete parameter set • More extensive structure of the functions achieved by using an OP1S operator control panel
2	Fixed settings	• Used to perform a parameter reset to a factory or user setting
3	Quick parameterization	• Used for quick parameterization with parameter modules • When selected, the unit switches to status 5 "Drive setting"
4	Board configuration	• Used for configuring the optional boards • When selected, the unit switches to status 4 "Board configuration"
5	Drive setting	• Used for detailed parameterization of important motor, encoder and control data • When selected, the unit switches to status 5 "Drive setting"
6	Download	• Used to download parameters from an OP1S, a PC or an automation unit • When selected, the unit switches to status 21 "Download"
7	Upread/free access	• Contains the complete parameter set and is used for free access to all parameters without being restricted by further menus • Enables all parameters to be upread by an OP1S, PC or automation unit
8	Power section definition	• Used to define the power section (only necessary for units of the Compact and chassis type) • When selected, the unit switches to status 0 "Power section definition"

Table 5-1 Main menus

User parameters

In principle, parameters are firmly assigned to the menus. However, the "User parameters" menu has a special status. Parameters assigned to this menu are not fixed, but can be changed. You are thus able to put together the parameters required for your application in this menu and structure them according to your needs.

The parameters to be included in the "User parameters" menu are selected in parameter P360 (Select UserParam). This parameter is indexed and permits the input of 100 parameter numbers. The sequence in which the parameter numbers are entered also determines the sequence in which they appear in the "User parameters" menu. If parameters with parameter numbers greater than 999 are to be included in the menu, they have to be input in the usual notation for the OP1S (replacing letters by figures).

Example:

Parameterization of P360	Contained in "User parameters" menu:
P360.1 = 053	P053 Parameter access (always contained)
P360.2 = 060	P060 Menu select (always contained)
P360.3 = 462	P462 Accel Time
P360.4 = 464	P464 Decel Time
P360.5 = 235	P235 n-Reg Gain1
P360.6 = 240	P240 n-Reg Time
P360.7 = 2306	U306 Timer5 Time_s

Table 5-2 Example: Parameterizing a user menu

Lock and key

In order to prevent undesired parameterization of the units and to protect your know-how stored in the parameterization, it is possible to restrict access to the parameters by defining your own passwords with the parameters:

- P358 key and
- P359 lock.

If P358 and P359 do not have the same parameterization, only the "User parameters" and the "Fixed settings" menus can be selected in parameter P60 (Menu selection). This means that only the enabled parameters in the "User parameters" menu and the parameters of the "Fixed settings" menu are accessible to the operator. These restrictions are canceled again only if P358 and P359 are given the same parameter setting.

You should proceed in the following manner when using the lock and key mechanism:

1. Adopt key parameter P358 in the "User parameters" menu (P360.x = 358).
2. Program the lock parameter P359 in both parameter indices with your specific password.
3. Change over to the "User parameters" menu.

Depending on the parameterization of the key parameter P358 (the same or not the same as P359), you can now leave the "User parameters" menu and carry out or not carry out further parameterization (Exception: "Fixed settings" menu).

Examples:

Lock	Key	Event
P359.1 = 0 P359.2 = 0 (Factory setting)	P358.1 = 0 P358.2 = 0 (Factory setting)	Lock and key have the same parameter setting, all menus are accessible.
P359.1 = 12345 P359.2 = 54321	P358.1 = 0 P358.2 = 0	Lock and key do not have the same parameter setting, only the "User parameters" and "Fixed settings" menus are accessible.
P359.1 = 12345 P359.2 = 54321	P358.1 = 12345 P358.2 = 54321	Lock and key have the same parameter setting, all menus are accessible.

Table 5-3 Examples of using the lock and key mechanism

5.2 Changeability of parameters

The parameters stored in the units can only be changed under certain conditions. The following preconditions must be satisfied before parameters can be changed:

Preconditions	Remarks
• Either a function parameter or a BICO parameter must be involved (identified by upper-case letters in the parameter number).	Visualization parameters (identified by lower-case letters in the parameter number) cannot be changed.
• Parameter access must be granted for the source from which the parameters are to be changed.	Release is given in P053 Parameter access.
• A menu must be selected in which the parameter to be changed is contained.	The menu assignment is indicated in the parameter list for every parameter.
• The unit must be in a status which permits parameters to be changed.	The statuses in which it is possible to change parameters are specified in the parameter list.

Table 5-4 Preconditions for being able to change parameters

NOTE

The current status of the units can be interrogated in parameter r001.

Examples:

Status (r001)	P053	Result
"Ready for ON" (09)	2	P222 Src n(act) can only be changed via the PMU
"Ready for ON" (09)	6	P222 Src n(act) can be changed via the PMU and SCom1 (e.g. OP1S)
"Operation" (14)	6	P222 Src n(act) cannot be changed on account of the drive status

Table 5-5 Influence of drive status (r001) and parameter access (P053) on the changeability of a parameter

5.3 Parameter input via the PMU

The PMU parameterizing unit enables parameterization, operator control and visualization of the converters and inverters directly on the unit itself. It is an integral part of the basic units. It has a four-digit seven-segment display and several keys.

The PMU is used with preference for parameterizing simple applications requiring a small number of set parameters, and for quick parameterization.

PMU in units of the Compact PLUS type

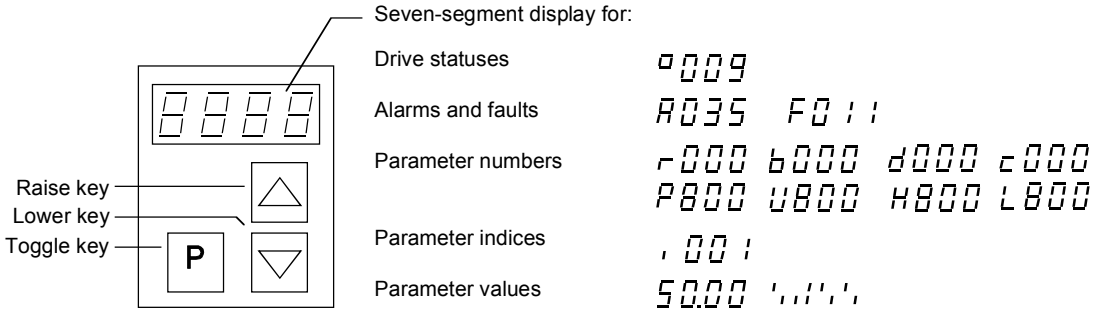

Fig. 5-2 PMU in units of the Compact PLUS type

Key	Significance	Function
P	Toggle key	• For switching between parameter number, parameter index and parameter value in the indicated sequence (command becomes effective when the key is released) • If fault display is active: For acknowledging the fault
△	Raise key	For increasing the displayed value: • Short press = single-step increase • Long press = rapid increase
▽	Lower key	For lowering the displayed value: • Short press = single-step decrease • Long press = rapid decrease
P + △	Hold toggle key and depress raise key	• If parameter number level is active: For jumping back and forth between the last selected parameter number and the operating display (r000) • If fault display is active: For switching over to parameter number level • If parameter value level is active: For shifting the displayed value one digit to the right if parameter value cannot be displayed with 4 figures (left-hand figure flashes if there are any further invisible figures to the left)
P + ▽	Hold toggle key and depress lower key	• If parameter number level is active: For jumping directly to operating display (r000) • If parameter value level is active: For shifting the displayed value one digit to the left if the parameter value cannot be displayed with 4 figures (right-hand figure flashes if there are any further invisible figures to the right)

Table 5-6 Operator control elements of the PMU (Compact PLUS type)

PMU in units of the Compact and chassis type

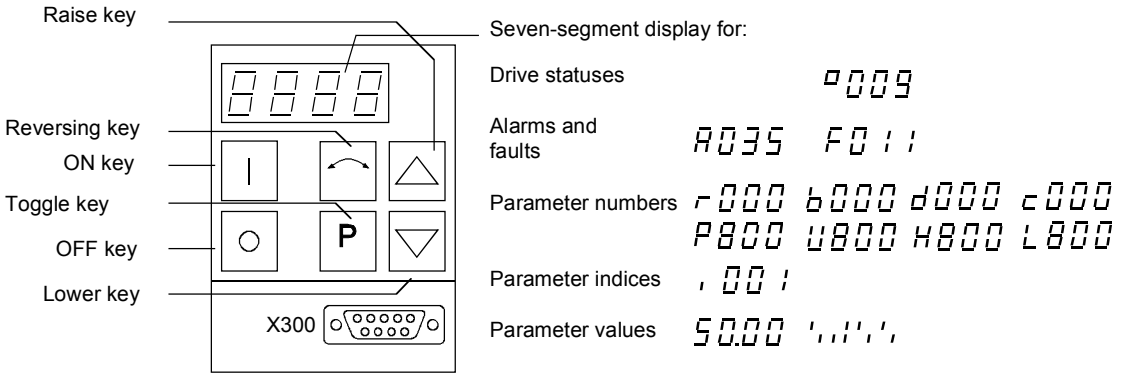

Fig. 5-3 PMU parameterizing unit

Key	Significance	Function
	ON key	• For energizing the drive (enabling motor activation). • If there is a fault: For returning to fault display
	OFF key	• For de-energizing the drive by means of OFF1, OFF2 or OFF3 (P554 to 560) depending on parameterization.
	Reversing key	• For reversing the direction of rotation of the drive. The function must be enabled by P571 and P572
P	Toggle key	• For switching between parameter number, parameter index and parameter value in the sequence indicated (command becomes effective when the key is released). • If fault display is active: For acknowledging the fault
	Raise key	For increasing the displayed value: • Short press = single-step increase • Long press = rapid increase
	Lower key	For lowering the displayed value: • Short press = single-step decrease • Long press = rapid decrease
P +	Hold toggle key and depress raise key	• If parameter number level is active: For jumping back and forth between the last selected parameter number and the operating display (r000) • If fault display is active: For switching over to parameter number level • If parameter value level is active: For shifting the displayed value one digit to the right if parameter value cannot be displayed with 4 figures (left-hand figure flashes if there are any further invisible figures to the left)
P +	Hold toggle key and depress lower key	• If parameter number level is active: For jumping directly to the operating display (r000) • If parameter value level is active: For shifting the displayed value one digit to the left if parameter value cannot be displayed with 4 figures (right-hand figure flashes if there are any further invisible figures to the right)

Table 5-7 Operator control elements on the PMU

Toggle key (P key)

As the PMU only has a four-digit seven-segment display, the 3 descriptive elements of a parameter

- Parameter number,
- Parameter index (if the parameter is indexed) and
- Parameter value

cannot be displayed at the same time. For this reason, you have to switch between the individual descriptive elements by depressing the toggle key. After the desired level has been selected, adjustment can be made using the raise key or the lower key.

With the toggle key, you can change over:

- from the parameter number to the parameter index
- from the parameter index to the parameter value
- from the parameter value to the parameter number

If the parameter is not indexed, you can jump directly from the parameter number to the parameter value.

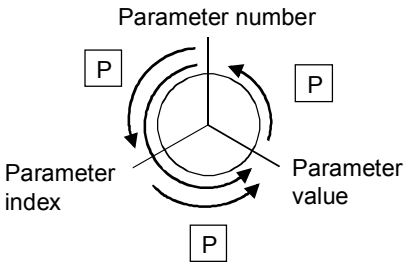

NOTE

If you change the value of a parameter, this change generally becomes effective immediately. It is only in the case of acknowledgement parameters (marked in the parameter list by an asterisk ‘ * ’) that the change does not become effective until you change over from the parameter value to the parameter number.

Parameter changes made using the PMU are always safely stored in the EEPROM (protected in case of power failure) once the toggle key has been depressed.

Example The following example shows the individual operator control steps to be carried out on the PMU for a parameter reset to factory setting.

Set P053 to 0002 and grant parameter access via PMU

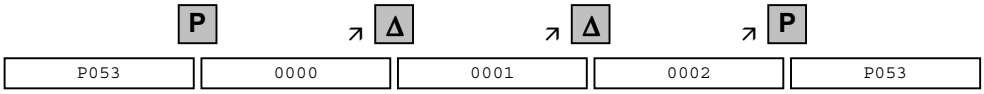

Select P060

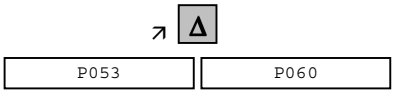

Set P060 to 0002 and select "Fixed settings" menu

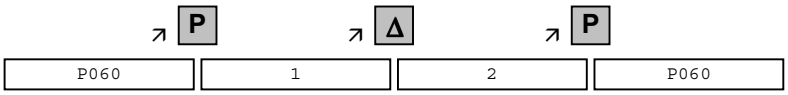

Select P970

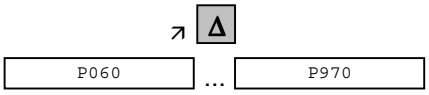

Set P970 to 0000 and start parameter reset

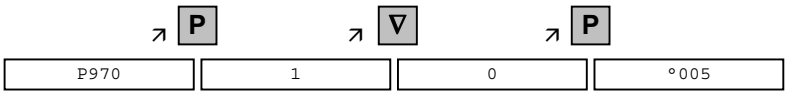

5.4 Parameter input via the OP1S

5.4.1 General

The operator control panel (OP1S) is an optional input/output device which can be used for parameterizing and starting up the units. Plain-text displays greatly facilitate parameterization.

The OP1S has a non-volatile memory and can permanently store complete sets of parameters. It can therefore be used for archiving sets of parameters. The parameter sets must be read out (upread) from the units first. Stored parameter sets can also be transferred (downloaded) to other units.

The OP1S and the unit to be operated communicate with each other via a serial interface (RS485) using the USS protocol. During communication, the OP1S assumes the function of the master whereas the connected units function as slaves.

The OP1S can be operated at baud rates of 9.6 kBd and 19.2 kBd, and is capable of communicating with up to 32 slaves (addresses 0 to 31). It can therefore be used both in a point-to-point link (e.g. during initial parameterization) and within a bus configuration.

The plain-text displays can be shown in one of five different languages (German, English, Spanish, French, Italian). The language is chosen by selecting the relevant parameter for the slave in question.

Order numbers

Components	**Order Number**
OP1S	6SE7090-0XX84-2FK0
Connecting cable 3 m	6SX7010-0AB03
Connecting cable 5 m	6SX7010-0AB05
Adapter for installation in cabinet door incl. 5 m cable	6SX7010-0AA00

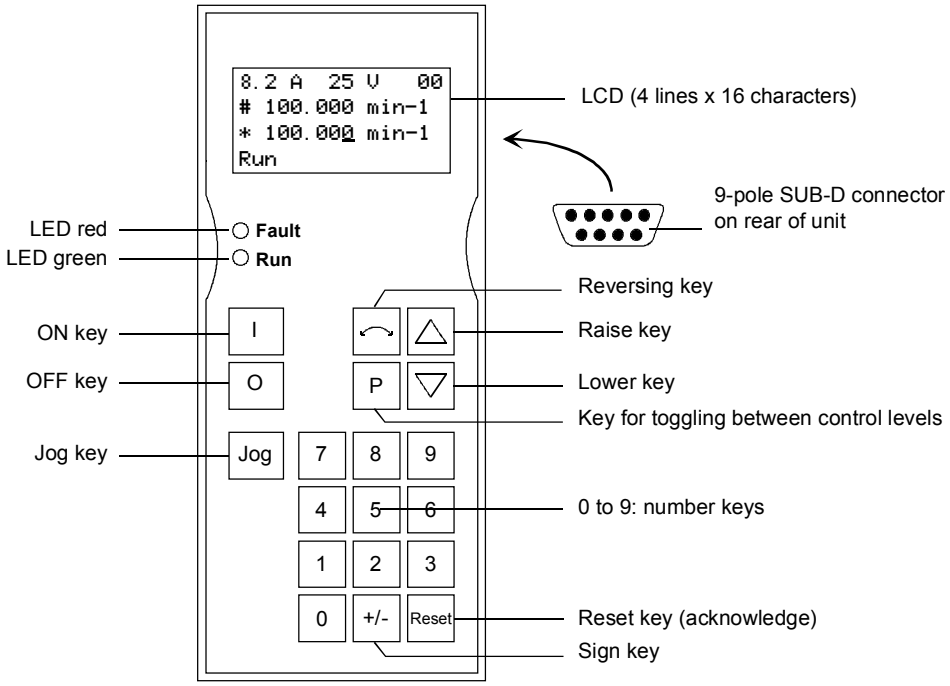

Fig. 5-4 View of the OP1S

OP1S connection

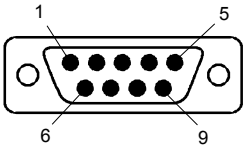

Pin	Designation	Significance	Range
1			
2			
3	RS485 P	Data via RS485 interface	
4			
5	N5V	Ground	
6	P5V	5 V aux. voltage supply	±5%, 200 mA
7			
8	RS485 N	Data via RS485 interface	
9		Reference potential	

Table 5-8 OP1S connections

5.4.2 Connecting, run-up

5.4.2.1 Connecting

The OP1S can be connected to the units in the following ways:

- Connection via 3 m or 5 m cable (e.g. as a hand-held input device for start-up)
- Connection via cable and adapter for installation in a cabinet door
- Plugging into MASTERDRIVES Compact units (for point-to-point linking or bus configuration)
- Plugging into MASTERDRIVES Compact PLUS units (for bus configuration)

Connection via cable

The cable is plugged into the Sub D socket X103 on units of the Compact PLUS type and into Sub D socket X300 on units of the Compact and chassis type.

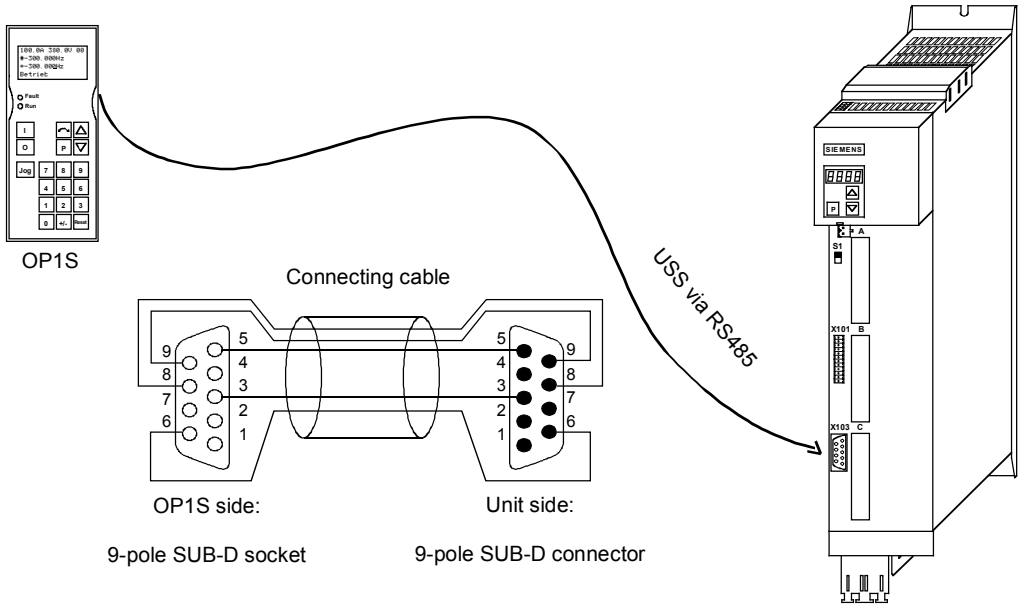

Fig. 5-5 Example: The OP1S in a point-to-point link with the Compact PLUS unit

Plugging into units of the Compact and chassis type

Carefully penetrate the pre-punched holes for the fixing screws in the front panel of the Compact units. Plug the OP1S onto the Sub D socket X300 and screw it tight using the two screws (M5 x 10, accessory pack) from the inside of the front panel.

Plugging onto Compact PLUS rectifier unit

On the Compact PLUS rectifier unit, you can plug the OP1S onto the Sub D socket X320 and lock it in place on the front cover.

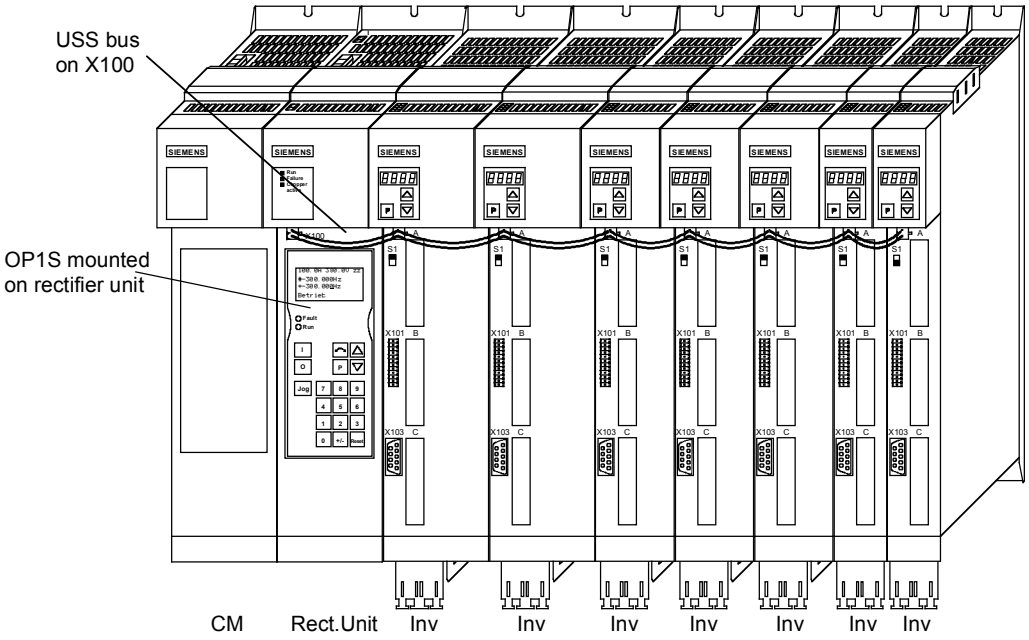

Fig. 5-6 Example: The OP1S during bus configuration with Compact PLUS units

NOTE

During bus operation, the Compact PLUS rectifier unit is only for mechanically restraining the OP1S and for connecting the bus to the inverters. It does not function as a slave.

5.4.2.2 Run-up

After the power supply for the unit connected to the OP1S has been turned on or after the OP1S has been plugged into a unit which is operating, there is a run-up phase.

NOTICE

The OP1S must not be plugged into the Sub D socket if the SCom1 interface parallel to the socket is already being used elsewhere, e.g. bus operation with SIMATIC as the master.

NOTE

In the as-delivered state or after a reset of the parameters to the factory setting with the unit's own control panel, a point-to-point link can be adopted with the OP1S without any further preparatory measures.

When a bus system is started up with the OP1S, the slaves must first be configured individually. The plugs of the bus cable must be removed for this purpose (see section "Bus operation").

During the run-up phase, the text "Search slave" is shown in the first line of the display, followed by "Slave found" and the found slave number as well as the set baud rate.

```
Slave found
Adress:   [00]
Baudrate:  [6]
```

Example of a display after the run-up phase (6 corresponds to 9.6 kBd)

After approximately 4 s, the display changes to

```
     SIEMENS
MASTERDRIVES VC
6SE7016-1EA61
SW:V3.0 OP:V2T20
```

Example of what is displayed after a slave address has been found

After a further 2 s, there is a changeover to the operating display. If it is not possible to start communicating with the slave, an error message ”Error: Configuration not ok” appears. About 2 s later, a request is made for new configuration.

```
New config?

#yes
 no
```

Error message displayed when communication is not possible

If the "P" key is pressed, the connected unit is reconfigured, i.e. the interface parameters are set to the standard values.

Number of PKWs (P702): 127

Number of PZDs (P703): 2 or 4

Telegram failure time (P704): 0 ms

If communication with the slave is still impossible, the reasons may be as follows:

- Defective cabling
- Bus operation with two or more slaves with the same bus address (see section "Bus operation")
- The baud rate set in the slave is neither 9.6 nor 19.2 kBd

In the latter case, an error message "Error: No slave found" appears. The unit's own PMU control panel must then be used to set parameter P701 (baud rate) to 6 (9.6 kBd) or 7 (19.2 kBd) or to reset the parameters to the factory setting.

5.4.3 Operator control

5.4.3.1 Operator control elements

Key	Significance	Function
I	ON key	• For energizing the drive (enabling motor activation). The function must be enabled by P554.
O	OFF key	• For de-energizing the drive by means of OFF1, OFF2 or OFF3. The function must be enabled by P554 to P560.
Jog	Jog key	• For jogging with jog setpoint 1 (only effective when the unit is in the "Ready to start" state). This function must be enabled by P568.
	Reversing key	• For reversing the direction of rotation of the drive. This function must be enabled by P571 and P572.
P	Toggle key	• For selecting menu levels and switching between parameter number, parameter index and parameter value in the sequence indicated. The current level is displayed by the position of the cursor on the LCD display (the command comes into effect when the key is released). • For conducting a numerical input.
Reset	Reset key	• For leaving menu levels • If fault display is active: For acknowledging the fault. This function must be enabled by P565
△	Raise key	For increasing the displayed value: • Short press = single-step increase • Long press = rapid increase • If motorized potentiometer is active, this is for raising the setpoint. This function must be enabled by P573
▽	Lower key	For lowering the displayed value: • Short press = single-step decrease • Long press = rapid decrease • If motorized potentiometer is active, this is for lowering the setpoint. This function must be enabled by P574
+/-	Sign key	• For changing the sign so that negative values can be entered
0 to 9	Number keys	• Numerical input

Table 5-9 Operator control elements of the OP1S

5.4.3.2 Operating display

After run-up of the OP1S, the following operating display appears:

```
     0.0A  0V  00
#      0.00 min-1
*      0.00 min-1
Ready.
```

Example of an operating display in the "Ready" status

The values shown in the operating display (except for slave number, 1st line on the far right) can be specified by means of parameterization:

1st line, left (P0049.001)	in the example "Output current"
1st line, right (P0049.002)	in the example "DC link voltage"
2nd line actual value (P0049.003)	in the example "Actual speed" (only a visualization parameter)
3rd line setpoint (P0049.004)	in the example "Speed setpoint"
4th line (P0049.005)	in the example "Operating state"

In the operating display, the actual value is indicated with "#" and the setpoint with "*".

In addition to the operating display on the display unit, the operating state is indicated by the red and green LEDs as follows:

	Flashing	**Continuous**
red LED	Alarm	Fault
green LED	Ready for ON	Operation

Table 5-10 Operating displays

5.4.3.3 Basic menu

When the "P" key is pressed, a changeover is made from the operating display to the basic menu.

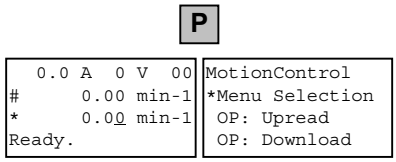

Display of the basic menu

The basic menu is the same for all units. The following selections can be made:

- Menu selection
- OP: Upread
- OP: Download
- Delete data
- Change slave
- Config. slave
- Slave ID

As not all the lines can be shown at the same time, it is possible to scroll the display as required with the "Lower" and "Raise keys.

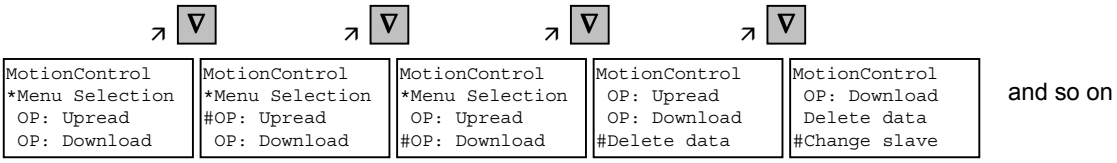

Example of switching from one line to the next

The currently active function is indicated by the "*" symbol and the selected function by the "#" symbol. After the "P" key has been pressed, the relevant symbol jumps to the selected function. The "Reset" key is for returning to the operating display.

5.4.3.4 Slave ID

With the "Slave ID" function, the user can request information about the connected slave. The slave ID consists, for example, of the following lines:

MASTERDRIVES MC

PLUS

6SE7014-0TP50

1.5 kW

V1.0

15.09.1997

Starting from the basic menu, the "Slave ID" function is selected with "Raise" or "Lower" and activated with "P". As all the lines cannot be shown at the same time, it is possible to scroll the display as required with the "Lower" and "Raise" keys. In addition, the slave number is shown at the top on the right-hand side.

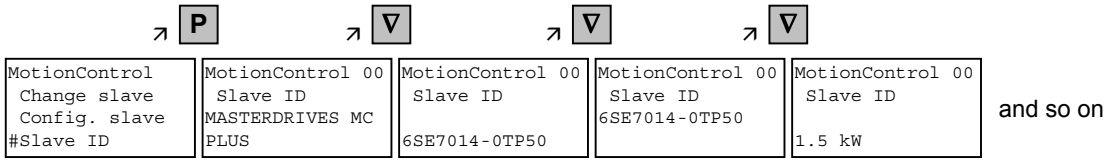

Example of a slave ID

5.4.3.5 OP: Upread

With the "OP: Upread" function, the parameters of the connected slave can be upread and stored in the flash memory inside the OP1S. Starting from the basic menu, the "OP: Upread" function is selected with "Lower" or "Raise" and started with "P". If the available memory is insufficient, the procedure is interrupted with an appropriate error message. During upread, the OP1S indicates the parameter currently being read. In addition, the slave number is shown at the top on the right-hand side.

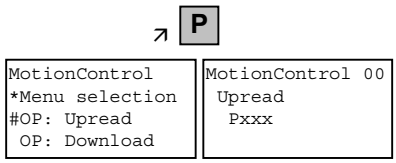

Example: Selecting and starting the "Upread" procedure

With "Reset", the procedure can be interrupted at any time. If the upread procedure has been completed in full, the user is requested to enter an ID with a maximum of 12 characters for the stored parameter set. This identification can, for example, consist of the date and two differentiating numbers. It is entered with the numerical keypad. With "Lower" a number which has been entered can be deleted.

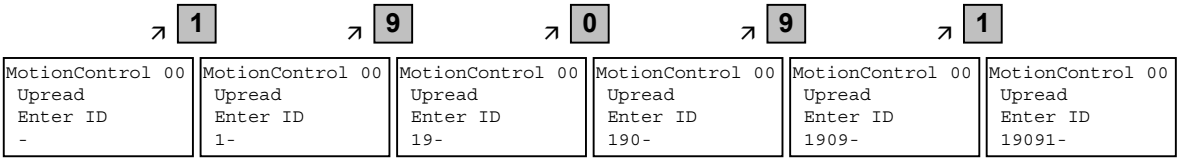

Example of entering an ID

When "P" is pressed, the message "Upread ok" appears and the display changes to the basic menu.

5.4.3.6 OP: Download

With the "OP: Download" function, a parameter set stored in the OP1S can be written into the connected slave. Starting from the basic menu, the "OP: Download" function is selected with "Lower" or "Raise" and activated with "P".

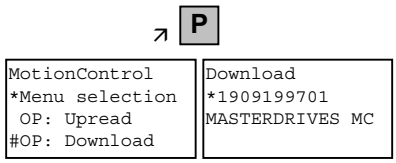

Example: Selecting and activating the "Download" function

One of the parameter sets stored in the OP1S must now be selected with "Lower" or "Raise" (displayed in the second line). The selected ID is confirmed with "P". The slave ID can now be displayed with "Lower" or "Raise" (see section "Slave ID"). The "Download" procedure is then started with "P". During download, the OP1S displays the currently written parameter.

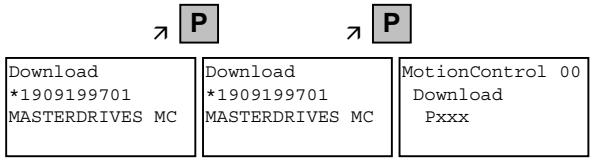

Example: Confirming the ID and starting the "Download" procedure

With "Reset", the procedure can be stopped at any time. If downloading has been fully completed, the message "Download ok" appears and the display returns to the basic menu.

After the data set to be downloaded has been selected, if the identification of the stored software version does not agree with the software version of the unit, an error message appears for approximately 2 seconds. The operator is then asked whether downloading is to be discontinued.

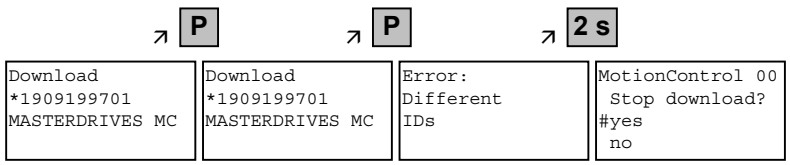

Yes: The "Download" procedure is discontinued.

No: The "Download" procedure is carried out.

5.4.3.7 Delete data

With the "Delete data" function, the user can delete parameter sets stored in the OP1S, thus, for example, creating space for new parameter sets. Starting from the basic menu, the "Delete data" function is selected with "Lower" or "Raise" and activated with "P".

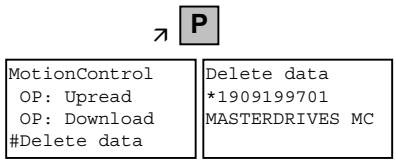

Example: Selection and activation of the "Delete data" function

One of the parameter sets stored in the OP1S must now be selected with "Lower" or "Raise" (displayed in the second line). With "P", the selected ID is confirmed. The slave ID can now be displayed with "Lower" or "Raise" (see section "Slave ID"). The "Delete data" procedure can now be started with "P". After completion, the message "Data deleted" appears and the display returns to the basic menu.

5.4.3.8 Menu selection

The actual parameterization and start-up of the connected slave is performed by means of the "Menu selection" function. Starting from the basic menu, the "Menu selection" function is selected with "Lower" or "Raise". By pressing "P", the unit-specific sub-menu is displayed with the following choices:

- User Param.
- Param Menu..
- FixedSet...
- Quick Param...
- Board Conf.
- Drive Set
- Download
- UpR/fr.Access
- Power Def.

Two or more dots after these items mean that there is a further sub-menu level. If "Parameter menu.." is selected, access is possible to all parameters via correspondingly structured sub-menus. If "UpR/fr. Access" is selected, direct access is gained to the parameter level.

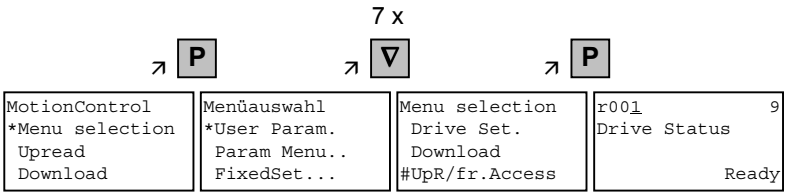

Example: Selecting the parameter level by means of UpR/fr.access

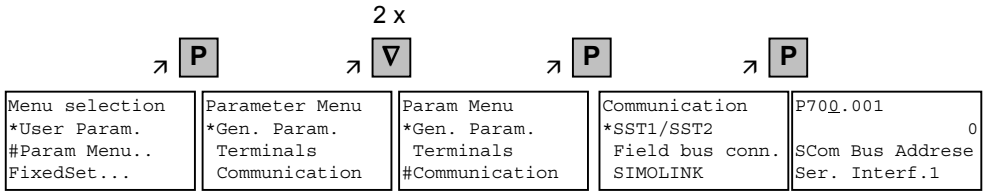

Example: Selecting a parameter via sub-menus

Parameter display and parameter correction

A parameter number can be selected from the parameter level directly with the numerical keys or with "Raise"/"Lower". The parameter number is shown as a three-figure quantity. In the event of four-figure parameter numbers, the first figure (1, 2 or 3) is not displayed. A distinction is made with the letters (P, H, U etc.).

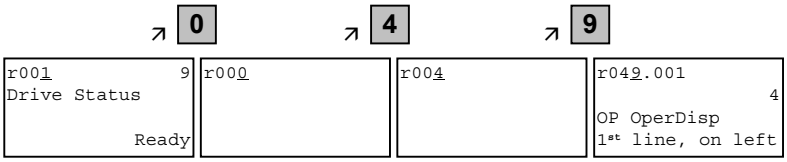

Example: Direct input of the parameter number with the numerical keypad

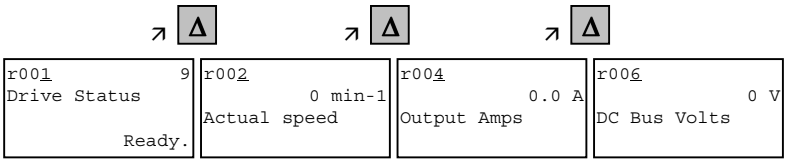

Example: Correcting the parameter number by means of "Raise"

If the parameter is found not to exist when the number is entered, a message "No PNU" appears. A non-existent parameter number can be skipped by selecting "Raise" or "Lower".

How the parameters are shown on the display depends on the type of parameter. There are, for example, parameters with and without an index, with and without an index text and with and without a selection text.

Example: Parameter with index and index text

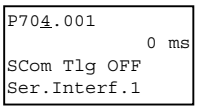

1st line: Parameter number, parameter index
2nd line: Parameter value with unit
3rd line: Parameter name
4th line: Index text

Example: Parameter with index, index text and selection text

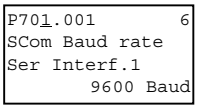

1st line: Parameter number, parameter index, parameter value
2nd line: Parameter name
3rd line: Index text
4th line: Selection text

Example: Parameter without index, with selection text, binary value

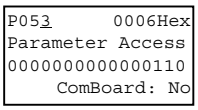

1st line: Parameter number, parameter value, hexadecimal parameter value

2nd line: Parameter name

3rd line: Parameter value, binary

4th line: Selection text

Transition between the parameter number, parameter index and parameter value levels is made with "P".

Parameter number → "P" → Parameter index → "P" → Parameter value

If there is no parameter index, this level is skipped. The parameter index and the parameter value can be corrected directly with the "Raise"/"Lower" keys. An exception to this are parameter values shown in binary form. In this case, the individual bits are selected with "Raise"/"Lower" and corrected with the numerical keys (0 or 1).

If the index number is entered by means of the numerical keys, the value is not accepted until "P" is pressed. If the "Raise" or "Lower" keys are used to correct the number, the value comes into effect immediately. The acceptance of an entered parameter value and return to the parameter number does not take place until "P" is pressed. The level selected in each case (parameter number, parameter index, parameter value) is marked with the cursor. If an incorrect parameter value is entered, the old value can be obtained by pressing "Reset". The "Reset" key can also be used to go one level lower.

Parameter value → "Reset" → Parameter index → "Reset" → Para.No.

Parameters which can be changed are shown in upper-case letters and visualization parameters which cannot be changed are shown in lower-case letters. If a parameter can only be changed under special conditions or if an incorrect value has been entered with the numerical keys, an appropriate message follows, e.g.:

- "Value not perm." Incorrect value entered
- "Value <> min/max" Value too large or too small
- "P53/P927?" No parameter access
- "Operating status?" Value can only be changed in the "Drive setting" status, for example

With "Reset", the message is deleted and the old value is re-instated.

NOTE

Parameter changes are always stored with power-failure protection in the EEPROM of the unit connected to the OP1S.

Example of parameter correction:

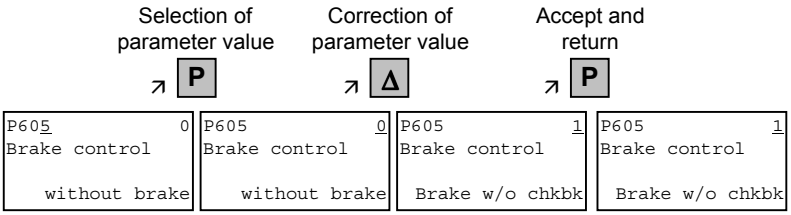

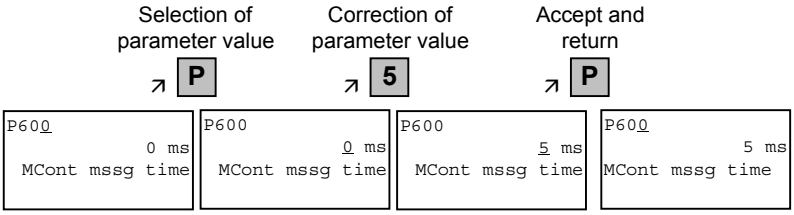

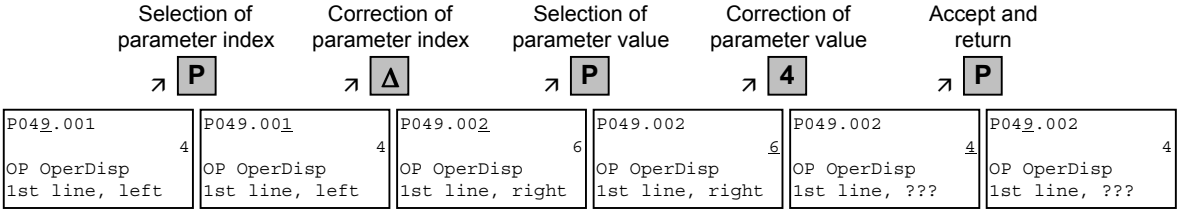

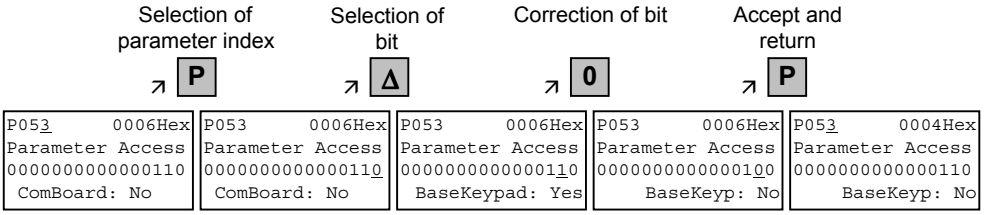

Some parameters may also be displayed without a parameter number, e.g. during quick parameterization or if "Fixed setting" is selected. In this case, parameterization is carried out via various sub-menus.

Example of how to proceed for a parameter reset.

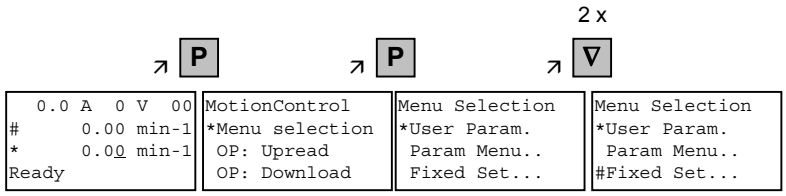

Selection of fixed setting

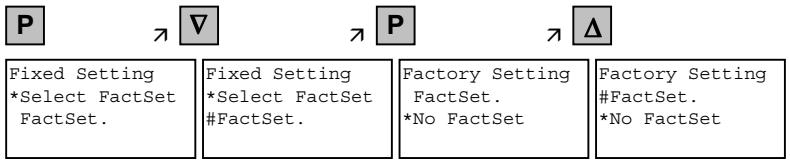

Selection of factory setting

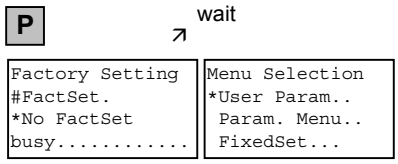

Start of factory setting

NOTE It is not possible to start the parameter reset in the "Run" status.

Fault and alarm messages

A fault or alarm message is indicated by the red LED. In the event of a fault, the red LED lights up and stays on. A fault message appears in the 3rd and 4th line of the operating display.

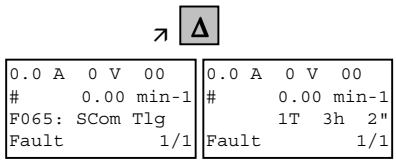

Example of a fault display

The fault number and the respective text are shown in the 3rd line. Up to 8 fault messages can be stored but only the first fault to occur is shown on the display. Several subsequent faults are shown in the 4th line, e.g. with 1/3 (first of three). Information on all faults can be obtained from the fault memory. With "Raise"/"Lower", the associated operating hours are shown when a fault is waiting to be remedied.

After the cause of a fault has been removed, the fault is acknowledged with "Reset" inside the operating display (the "Reset" key must be appropriately parameterized. See section "Issuing commands via the OP1S"). By pressing "P" and "Lower" at the same time, it is possible to skip back directly to the operating display from the parameter level.

When there is an alarm, the red LED flashes. A warning appears in the 4th line of the operating display.

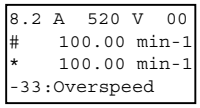

Example of an alarm display

The alarm number and the respective text is shown in the 4th line. There can be several alarms at the same time but only the first alarm to occur is shown on the display. Several alarms are shown in the 4th line before the alarm number with an "+" instead of "–". Information on all alarms can be obtained with the alarm parameters r953 to r969.

An alarm cannot be acknowledged. As soon as the cause no longer exists, the alarm/display disappears automatically.

5.4.3.9 Issuing commands via the OP1S

Control functions and setpoint specifications for the connected unit can be selected with the corresponding keys of the OP1S, for example during start-up. To do so, the sources of the control commands have to be added to the corresponding bits of word 1 of the SCom1 interface. For setpoint specification, the sources of the setpoints must be appropriately "interconnected". In addition, the setpoint to be changed is to be parameterized as a displayed value in the 3rd line of the operating display.

Key	Function	Parameter number	Parameter value
I O	ON/OFF1	P554 Source ON/OFF1	2100
△ ▽	Motorized potentiometer: setpoint higher, lower (only effective within the operating display)	P573 Source Raise MOP P574 Source Lower MOP P443 Source Main Setpoint P049.004 Setpoint Operating Disp	2113 2114 KK0058 (MOP Output) 424 (MOP Out)
0 to 9 △ or ▽	Setpoint specification by means of fixed setpoint (only effective within the operating display. If entered with numerical key, confirm with "P")	P443 Source Main Setpoint P573 Source Raise MOP P574 Source Lower MOP P049.004 Setpoint Operating Disp	KK0040 (Fixed setpoints) 0 0 e.g. 401 (selected fixed setpoint)
↶	Reversing	P571 Source clockwise direc. of rotation P572 Source anti-clockwise direc. of. rotation	2111 2112
Reset	Acknowledging (only effective within the operating display)	P565 Source Acknowledge	2107
Jog	Jogging with jog setpoint 1 (only effective in the "Ready" status)	P568 Source Jog Bit 0 P448 Jog Setpoint 1	2108 Setpoint in %

NOTE

The OFF function can also be performed with OFF2 or OFF3 instead of OFF1. For this, the source of OFF2 (P555) or OFF3 (P556) must be "interconnected" to 2101 or 2102 respectively in addition to setting P554.

5.4.4 Bus operation

In order to start operating a bus system with the OP1S, the slaves must first be configured individually. To do this, the bus connecting cable between the slaves must be interrupted (pull out the bus-cable plug). For configuration, the OP1S is connected with each slave one after the other. A precondition for carrying out the configuration is a baud rate of 9.6 or 19.2 kBd set in the slave (see section "Run-up").

5.4.4.1 Configuring slaves

Starting from the basic menu, the "Config. slave" function is selected with "Lower"/"Raise" and activated with "P". The user is now requested to enter a slave address.

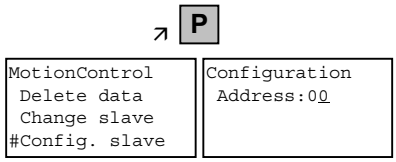

Example of activating the "Config. slave" function

After a different slave address for each slave has been entered by means of the "Raise" key or with the numerical keypad and confirmed with "P", configuration is carried out, i.e. the interface parameters are set to the standard value (see section "Run-up"). In addition, the slave address is entered and a baud rate of 9.6 kBd is set in the slave. After configuration has been completed, the message "Configuration ok" appears, followed by a return to the basic menu. If the configuration of all slaves has been successfully completed, bus operation can be started after the bus connection between the slaves has been restored.

NOTE

During bus operation, each slave must have a different address (P700). Bus operation is also possible at 19.6 kBd (set P701 to 7). The baud rate, however, must be set the same in all slaves.

5.4.4.2 Changing slaves

During bus operation, a specific slave can be selected via the OP1S with the "Change slave" function without any re-plugging. Starting from the basic menu, the "Change slave" function is selected with the "Lower"/"Raise" key and activated with "P". The user is then requested to enter a slave address.

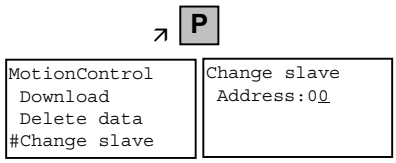

Example of activating the "Change slave" function

After the slave address has been entered with "Raise"/"Lower" and confirmed with "P", a change is made to the required slave and the display returns to the basic menu. If the slave cannot be found, an error message is output.

5.4.5 Technical data

Order number	6SE7090-0XX84-2FK0
Supply voltage	5 V DC ± 5 %, 200 mA
Operating temperature	0 °C to +55 °C
Storage temperature	-25 °C to +70 °C
Transport temperature	-25 °C to +70 °C
Environment class • Humidity • Pollution resistance	Acc. to DIN IEC 721 Part 3-3/04.90 03K3 13C3
Protection class	II acc. DIN VDE 0160 Part 1/05.82 IEC 536/1976
Degree of protection • Front • Rear	Acc. to DIN VDE 0470 Part 1/11.92 IP54 EN60529 IP21
Dimensions W x H x D	74 x 174 x 26 mm
Standards	VDE 0160/E04.91 VDE 0558 Part 1/07.87 UL, CSA

Table 5-11 Technical data

5.5 Parameter input with SIMOVIS / DriveMonitor

Operation of SIMOVIS / DriveMonitor via the PC and USS interfaces is described below.

5.5.1 Installation and connection

5.5.1.1 Installation

A CD is included with the devices of the MASTERDRIVES Series when they are delivered. The operating tool supplied on the CD (SIMOVIS / DriveMonitor) is automatically installed from this CD. If "automatic notification on change" is activated for the CD drive on the PC, user guidance starts when you insert the CD and takes you through installation of SIMOVIS / DriveMonitor. If this is not the case, start file "Autoplay.exe" in the root directory of the CD.

5.5.1.2 Connection

There are two ways of connecting a PC to a device of the SIMOVERT MASTERDRIVES Series via the USS interface. The devices of the SIMOVERT MASTERDRIVES Series have both an RS232 and an RS485 interface.

RS232 interface

The serial interface that PCs are equipped with by default functions as an RS232 interface. This interface is not suitable for bus operation and is therefore only intended for operation of a SIMOVERT MASTERDRIVES device.

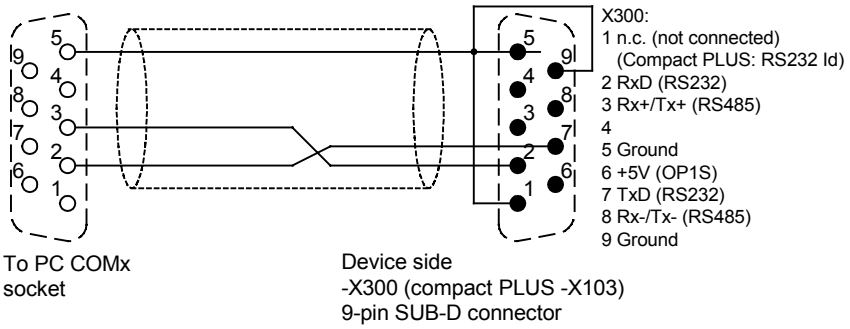

Fig. 5-7 Connecting cable for connecting PC COM(1-4) to SIMOVERT MASTERDRIVES X300

NOTICE

SIMOVIS / DriveMonitor must not be operated via the Sub-D socket X300 if the SST1 interface parallel to it is already being used for another purpose, e.g. bus operation with SIMATIC as the master.

RS485 interface

The RS485 interface is multi-point capable and therefore suitable for bus operation. You can use it to connect 31 SIMOVERT MASTERDRIVES with a PC. On the PC, either an integrated RS485 interface or an RS232 ↔ RS485 interface converter is necessary. On the device, an RS485 interface is integrated into the -X300 (compact PLUS -X103) connection. For the cable: see pin assignment -X300 and device documentation of the interface converter.

5.5.2 Bus configuration (SIMOVIS)

After you have launched SIMOVIS, the "SIMOVIS bus configuration" window appears. Here you must define, how many devices are to be addressed by SIMOVIS, of what type (device series from the SIMOREG or SIMOVERT families) these devices are, and how the connection with the devices is configured.

5.5.2.1 Creating a project

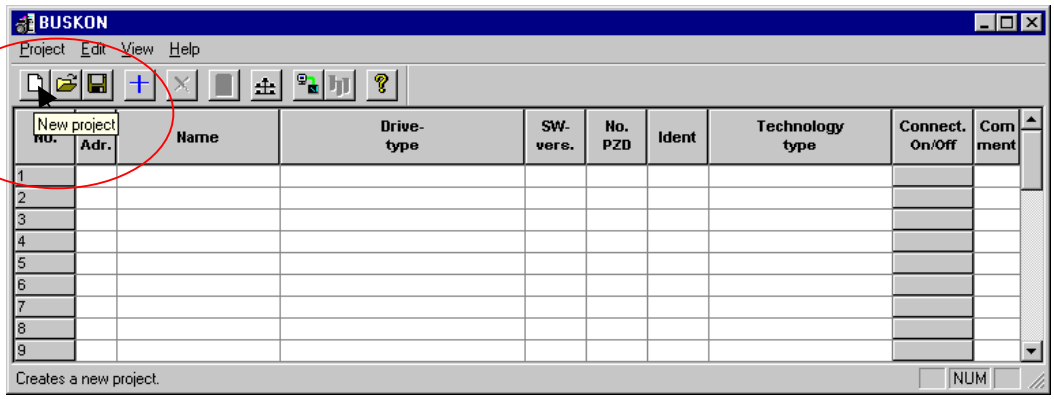

Fig. 5-8 Creating a project

First create a project. That is done as follows:

- If the toolbar is being displayed, you can create a project by clicking on the button *New project* (see Fig. 5-8) or selecting the menu command *Project → New*.
- After that, enter a project name that is not yet being used in field "Filename" in the following dialog box (Fig. 5-9) and save the project with button *Save*.

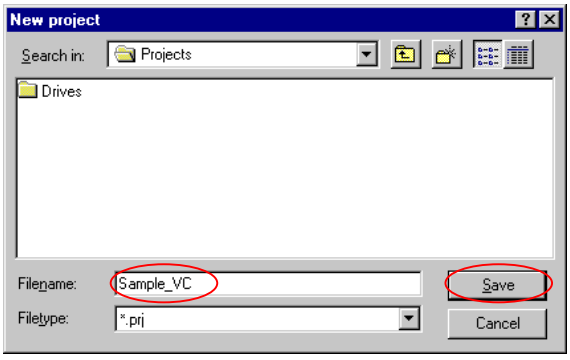

Fig. 5-9 Dialog box for creating a project

5.5.2.2 Setting the interface

For each project, you can configure the USS interface individually. When configuring, you must specify the baudrate and select a PC interface (COM 1-4). To set the interface, please proceed as follows:

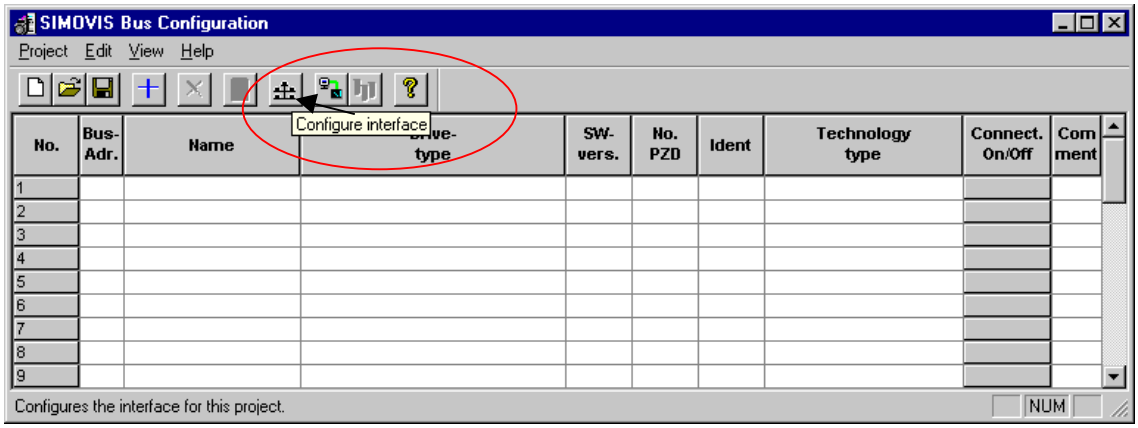

Fig. 5-10 Configuring the interface

If the toolbar is being displayed, click on button *Configure interface* (see Fig. 5-10) or select the menu command *Edit → Interface*. In window "Communication" you can then specify the required COM interface of the PC (COM1 to COM4) and the required baudrate (see Fig. 5-11[1]).

NOTE

Set the baudrate to the baudrate parameterized in the SIMOVERT MASTERDRIVES (P701) (factory setting 9600 baud).

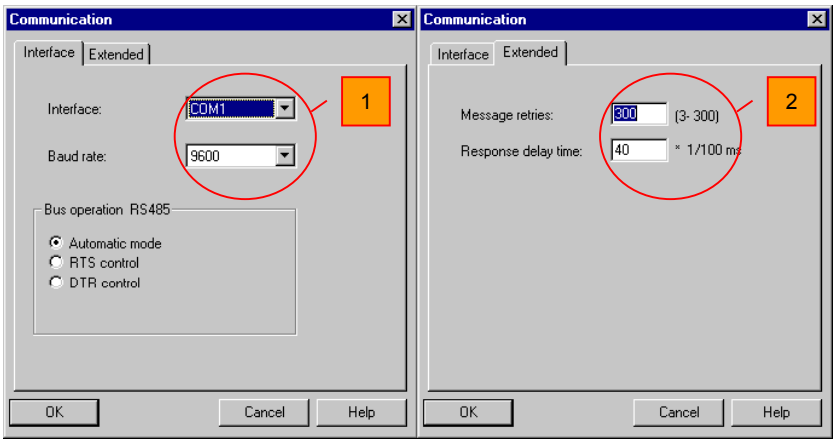

Fig. 5-11 Communication

You can also set:

- Operating mode of bus operation (RS485); for the setting, see the description of the interface converter RS232/RS485
- Request repetitions and response timeout on tab card "Extended", (see Fig. 5-11 [2]). Here, you can increase the values already set if communication errors occur frequently.

5.5.2.3 Selecting a device

After you have set the interface, select the connected device. This can be done in one of two ways:

- Set the device with "Add drive".
  If the toolbar is being displayed, click on button *Add drive* or select the menu command *Edit → Add drive*.

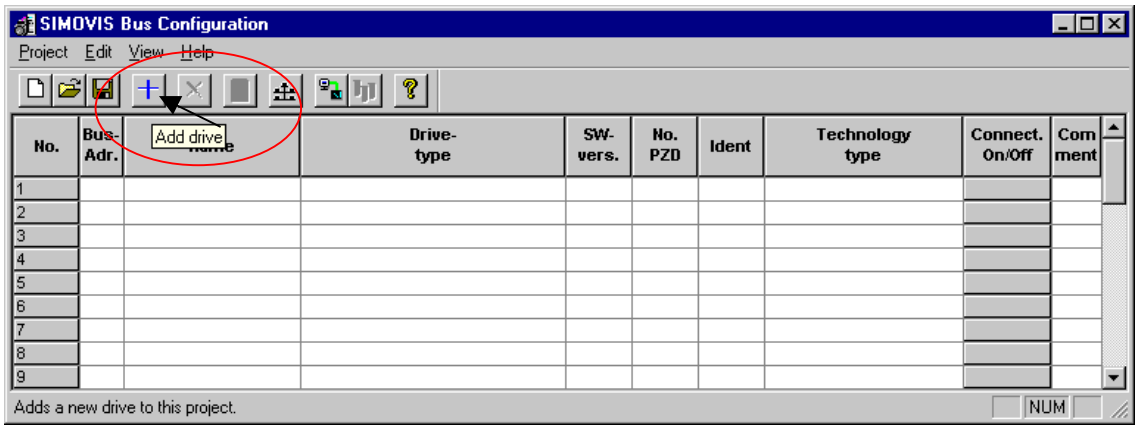

Fig. 5-12 Add drive

In window "Add a drive", the next free bus address is displayed in field "Bus adress" as a recommended value.

Fig. 5-13 Window for adding a device

NOTE

The bus address specified must match the SST bus address (P700) parameterized in the SIMOVERT MASTERDRIVES.

In dropdown list box "Drive" you can select the device type (e.g. MASTERDRIVES VC(CUVC)). You can only select stored devices.

In dropdown list box "SW-version" you can set the software version of the device. (For software versions not listed, see Section 5.5.6.6 "Learning a database".)

You can select the technology type that is to run on a T100, T300, or T400 technology module in dropdown list box "Techn. type".

If you require, you can enter any additional information about the device in field "Comment".

NOTE

Field "No. PZD" has no special significance for the parameterization of MASTERDRIVES. If you require operation using SIMOVIS, set this field to 4.

If the value is changed, it must be/remain ensured that the setting value in the program matches the value in parameter P703 of the drive at all times.

- Set the device with *Connect to all devices/identify devices*
  You can select this function using the toolbar or the menu command *Edit → Connect to drives/ identify drives*. For this function, it is necessary that there is a physical connection with the device and that the baudrate set in SIMOVIS is the same as that set in the device parameterized.

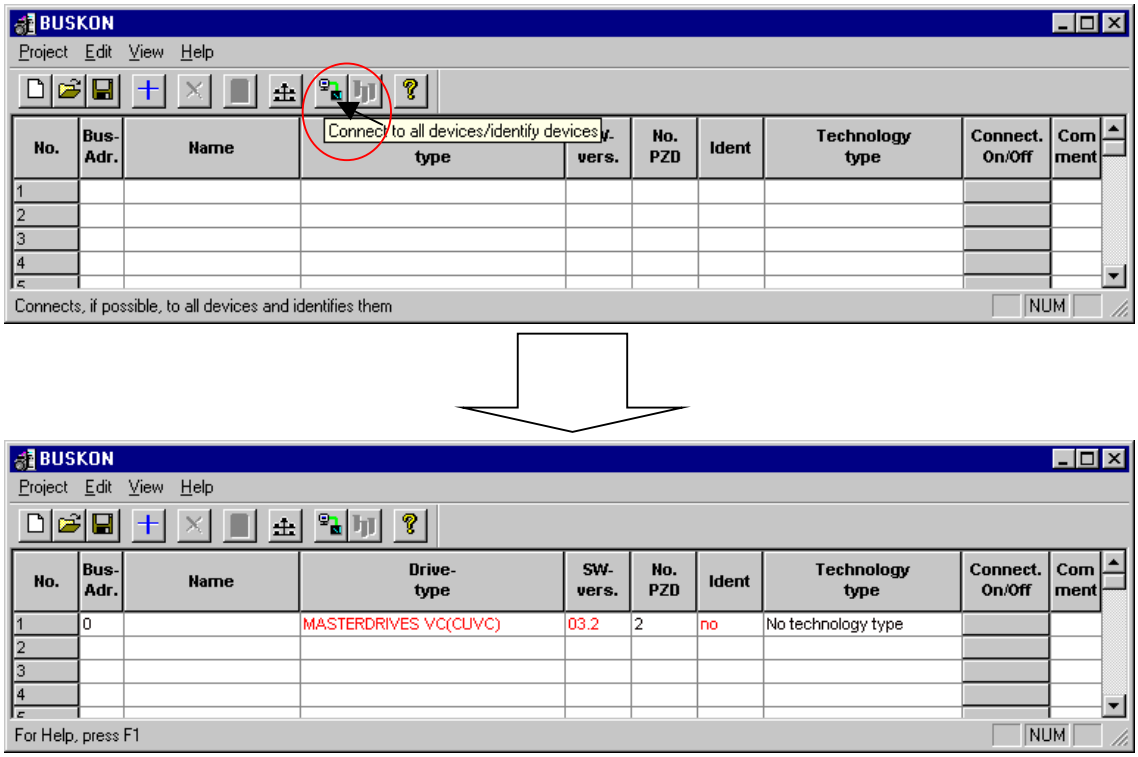

Fig. 5-14 Automatic identification

5.5.2.4 Testing the connection

To establish the connection with the device, click on field "Connect. On/Off" in the row of the device in question in the bus configuration table. With the set interface data, an attempt is then made to establish a connection. The color of the field then indicates the status of the connection (see Fig. 5-15):

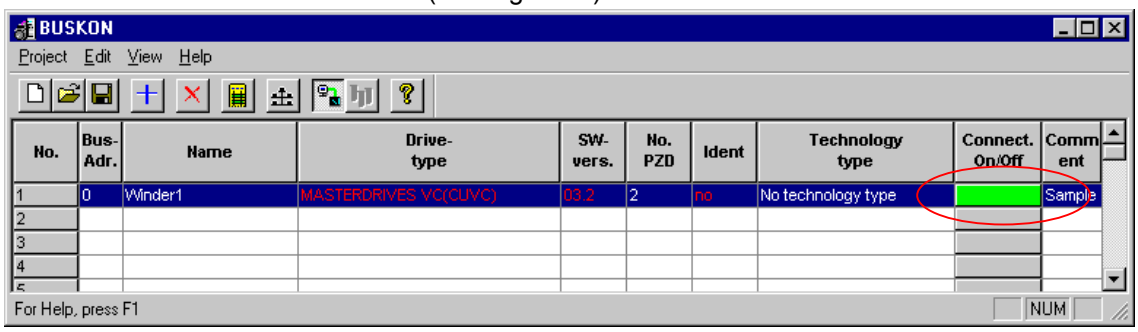

Fig. 5-15 Connection

green	Connection up, everything OK
yellow	Connection up, an alarm is pending on the device
red	Connection up, a fault is pending on the device
black	Connection not possible. Possible reasons for this: Incorrect PC interface, incorrect baudrate, device with this bus address does not exist, connection broken.

5.5.3 Drive configuration DriveMonitor

Unlike SIMOVIS, DriveMonitor starts with an empty drive window. You cannot perform bus and drive configuration here.

5.5.3.1 Setting the interface

You can configure the interface with menu *Tools → ONLINE Settings*.

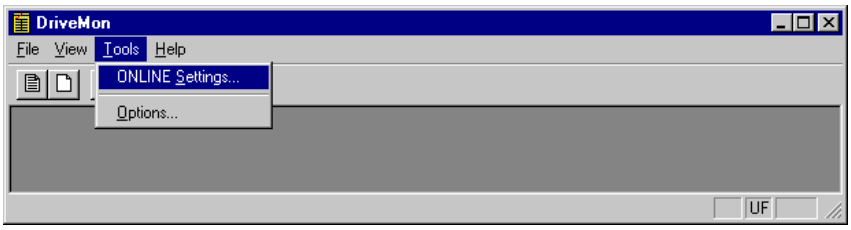

Fig. 5-16 Online settings

The following settings (Fig. 5-17) are possible:

- **Tab card "Bus Type",** options
  USS (operation via serial interface)
  Profibus DP (only if DriveMonitor is operated under Drive ES).
- **Tab card "Interface"**
  You can enter the required COM interface of the PC (COM1 to COM4) and the required baudrate here.

NOTE

Set the baudrate to the baudrate parameterized in SIMOVERT MASTERDRIVES (P701) (factory setting 9600 baud).

Further settings: operating mode of the bus in RS485 operation; setting according to the description of the interface converter RS232/RS485

- **Tab card "Extended"**
  Request retries and Response timeout; here you can increase the values already set if communication errors occur frequently.

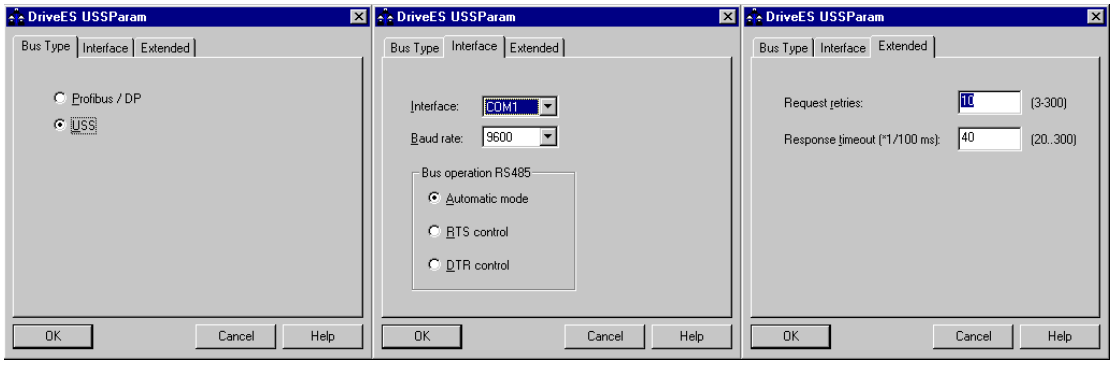

Fig. 5-17 Interface configuration

5.5.3.2 Drive settings

With menu *File→ New →...* you can create a new drive for parameterization (see Fig. 5-18). The system creates a download file (*.dnl), in which the drive characteristic data (type, software version) are stored. You can create the download file on the basis of an empty parameter set or the factory setting.

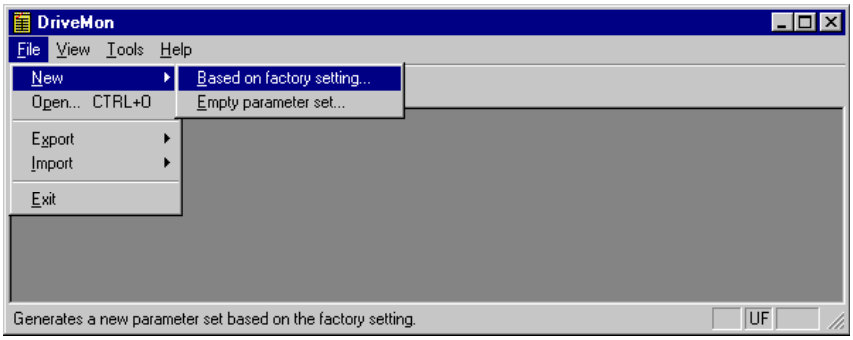

Fig. 5-18 Creating a new drive

Once you have created a drive, you can start it again with the menu function *File → Open* for parameterization by opening the download file.

When you create a new drive, the window "Properties - Drive" (Fig. 5-19) opens. Here you must enter the following data:

- In dropdown list box "Device type", select the type of device (e.g. MASTERDRIVES VC(CUVC)). You can only select the devices stored.
- In dropdown list box "Software version", you can select the software version of the device. You can generate databases for (new) software versions that are not listed when you start online parameterization.

- You can select the technology type that is to run on the technology module T100, T300, or T400, in dropdown list box "Technology type".
- You must only specify the bus address of the drive during online operation (switchover with button Online/Offline)

NOTE

The specified bus address must be the same as that of the parameterized SST bus address in SIMOVERT MASTERDRIVES (P700).

NOTE

Field "Number of PCD" has no special significance for the parameterization of MASTERDRIVES. If you require operation using SIMOVIS, set this field to 4.

If the value is changed, it must be/remain ensured that the setting value in the program matches the value in parameter P703 of the drive at all times.

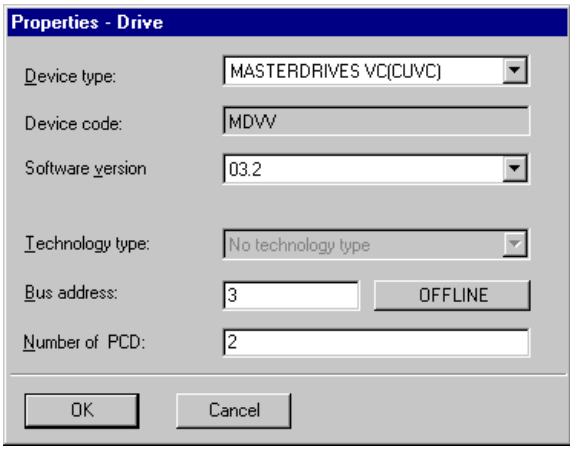

Fig. 5-19 Drive setting

After you have confirmed the drive settings with *ok*, you can still specify the name and the storage location of the download file to be created. After that, the parameter list opens in offline mode (Fig. 5-20).

With buttons *Offline, Online (RAM), Online (EEPROM)* (Fig. 5-20 [1]) you can switch modes. When you switch to online mode, device identification is performed. If the configured device and the real device do not match (device type, software version), an alarm appears. If an unknown software version is recognized, the option of creating the database is offered. (This process takes several minutes.)

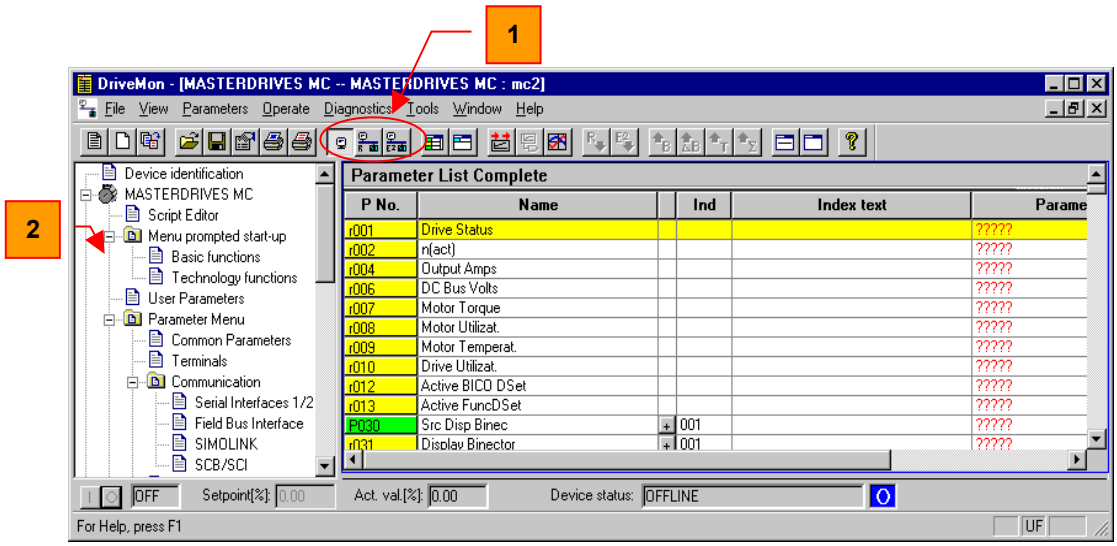

Fig. 5-20 Drive window/parameter list

The DriveMonitor drive window has a directory tree for navigation purposes (Fig. 5-20 [2]). You can deselect this additional operating tool in menu *View*.

Otherwise there is no difference between operation and parameterization of DriveMonitor and SIMOVIS.

5.5.4 Parameterization

5.5.4.1 Calling up the drive window (SIMOVIS)

You can open the drive window from the bus configuration window in one of the following ways:

- Double-click on the device to be parameterized (Fig. 5-21 [2])
- Call-up on the toolbar *Parameterize drive* (Fig. 5-21 [1])
- Call-up with the menu command *Edit → Parameterize drive* (Fig. 5-21 [3])

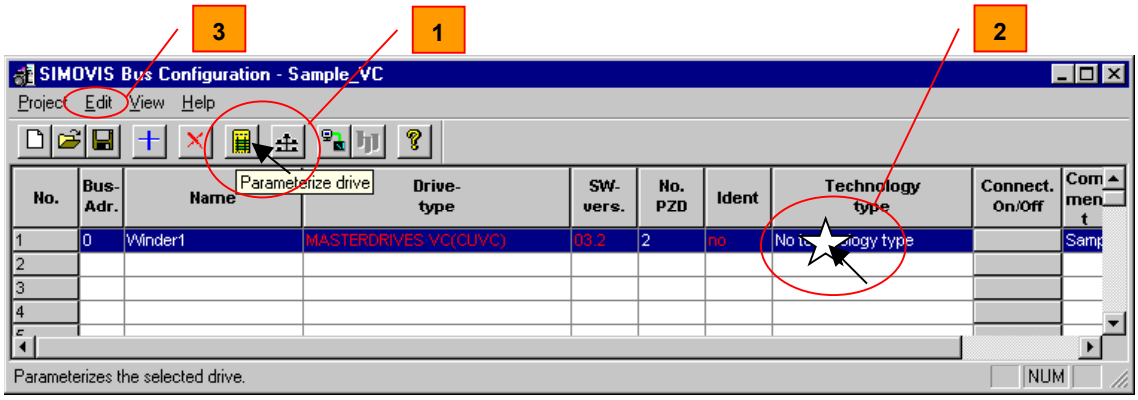

Fig. 5-21 Parameterizing a device

The drive window is then opened with an empty parameter list (*free parameterization*).

5.5.4.2 Drive window

NOTE

DriveMonitor starts immediately with the empty drive window without bus configuration. (See Section 5.5.3 "Drive configuration DriveMonitor".) After you have set the drive or opened a download file, the parameter list is displayed.

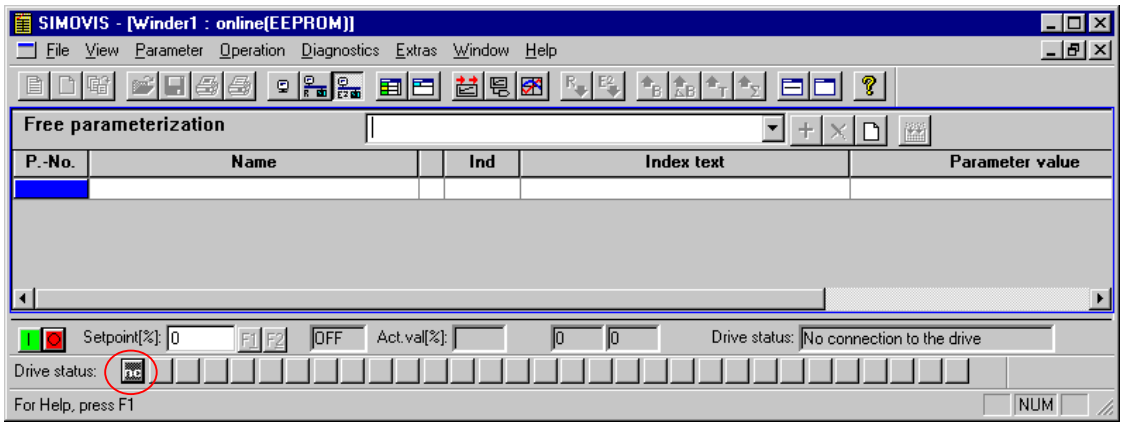

Fig. 5-22 Drive window

The drive window contains all elements required for the parameterization and operation of the connected device. In the lower bar (see Fig. 5-22), the status of the connection with the device is displayed:

Connection and device ok

Connection ok, device in fault state

Connection ok, device in alarm state

Device is parameterized offline

No connection with the device can be established (only offline parameterization possible).

NOTE

If no connection with the device can be established because the device does not physically exist or is not connected, you can perform offline parameterization. First switch to offline mode. In this mode, you can edit the parameter data set on the basis of the factory setting. In that way, you can create an individually adapted download file, which you can load into the device later.

5.5.4.3 Operating modes

You can switch between operating modes using the toolbar (Fig. 5-23 [1]) or menu *View* (Fig. 5-23 [2]).

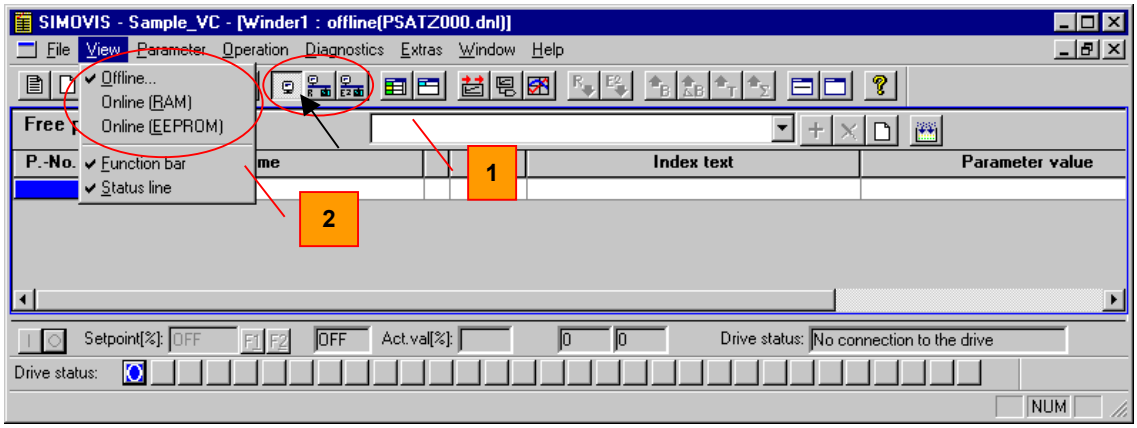

Fig. 5-23 Operating modes

The following modes are available:

- **Offline**
  In this mode, you can edit a parameter set on the basis of the factory setting (default for *View Offline*) or on the basis of a parameter file. You can open or create a parameter data set that is based on a file with menu *File → Open...* bzw. *File → New → Empty parameter set*. You can transfer the parameter data sets created or changed in this way into the device later with the download function.
- **Online RAM**
  In this mode, the edited parameter values are read out of the device online. The parameter changes are only written to the RAM and will therefore be lost when the device is switched off.
- **Online EEPROM**
  In this mode, the edited parameter values are read out of the device online. The parameter changes are written to the EEPROM and are therefore stored in the device nonvolatilely.

5.5.4.4 Parameterization options (Menu Parameter)

Menu *Parameter* contains several selection options for parameterization.

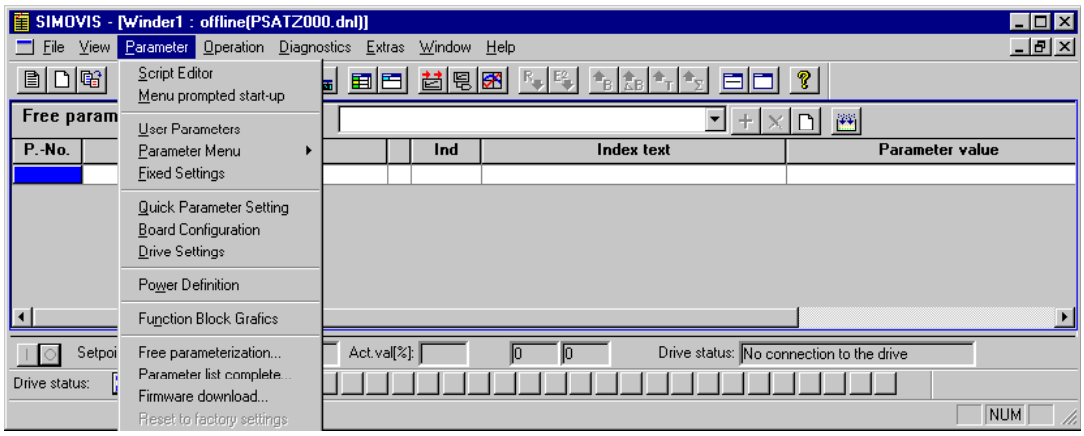

Fig. 5-24 Menu Parameter

Drive menus according to the device

The selection is made in SIMOVIS / DriveMonitor in accordance with the assignment of parameters to individual menus. (If permissible), the selection in Parameter menu (P60) is automatically set to the correct value. MASTERDRIVES VC/MC contains the following parameter menus:

- **User parameters (P60 = 0)**
  In this menu, only the parameters defined in the device as user parameters (P360) are visible.
- **Parameter menu (P60 = 1)**
  This menu is further subdivided. The parameters are assigned to function groups. In that way, you can perform a particular parameterization task effectively without global knowledge of the parameter set.

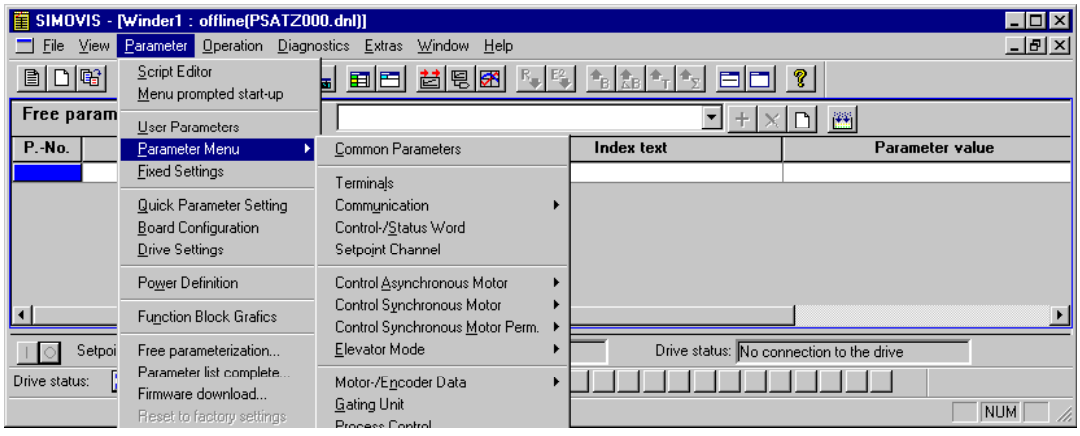

Fig. 5-25 Parameter menu

- **Fixed Settings (P60 = 2)**
  In this menu, the parameters required to make the factory setting are displayed.
- **Quick Parameter Setting (P60 = 3)**
  In this menu, the parameters required to perform quick parameterization are displayed.
- **Board Configuration (P60 = 4)**
  In this menu, the parameters required to perform board definition are displayed.
- **Drive Settings (P60 = 5)**
  In this menu, the parameters required to set the motor are displayed.
- **Power Definition (P60 = 8)**
  In this menu, the parameters required to define the power section are displayed.

SIMOVIS DriveMonitor parameter menus

- **Free parameterization**
  In menu *Free parameterization*, you can create individual parameter lists. First click on button *New list* on the toolbar of "Free parameterization" (Fig. 5-26 [1]). Then enter a name for the list in the window to the left of that (Fig. 5-26 [2]) and store the list with button *Add list* (Fig. 5-26 [3]). You can make a selection of lists already created with the dropdown text field on the toolbar.

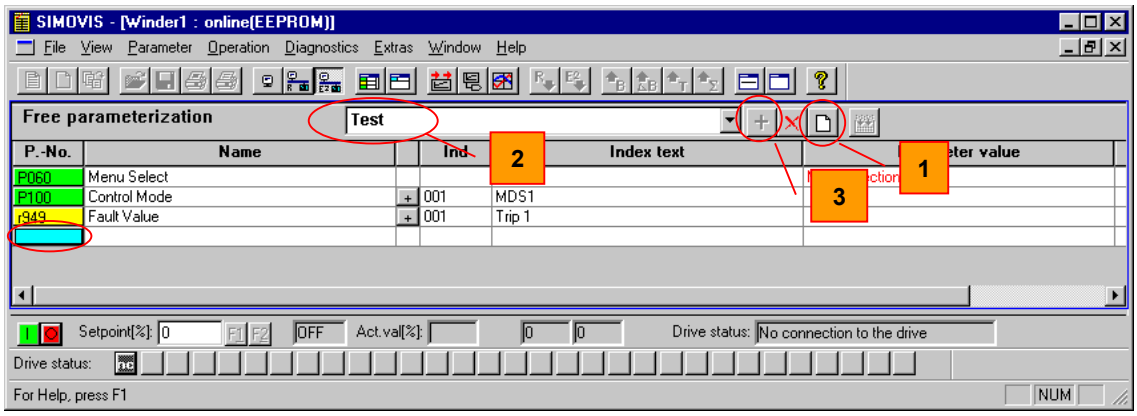

Fig. 5-26 Creating a parameter list

A new parameter list initially appears empty. At the end of the parameter list, the user can then enter the required parameter number by clicking on the last empty field, entering the number, and confirming with *Enter*. You can delete parameters that you do not require by selecting them with a mouse click and pressing *Enter*.

- **Parameter list complete**
  In menu *Parameter list complete*, all parameters stored in the device are displayed. The visibility and changeability of the parameter value depends on the device status. (See Chapter Parameter list column "Read/Write".)

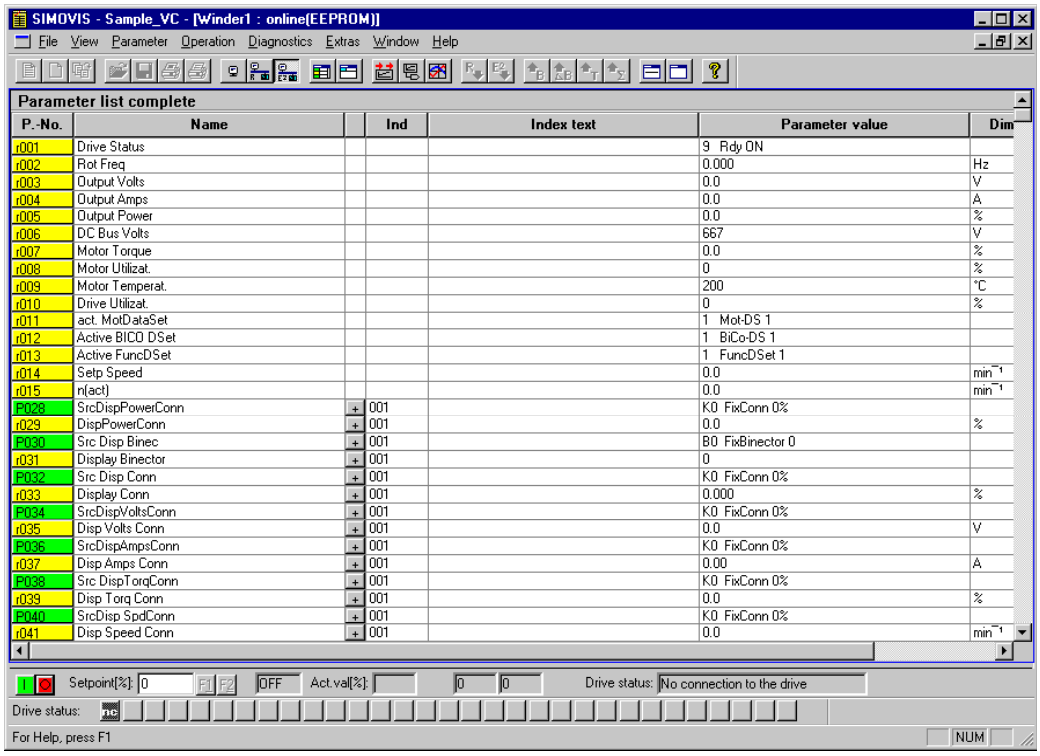

Fig. 5-27 Parameter list of all parameters

5.5.4.5 Structure of the parameter lists, parameterization with SIMOVIS / DriveMonitor

Parameterization using the parameter list is basically the same as parameterization using PMU (See Chapter "Parameterizating steps"). The parameter list provides the following advantages:

- Simultaneous visibility of a larger number of parameters
- Text display for parameter names, parameter value, binectors, and connectors
- On a change of parameters: Display of parameter limits or possible parameter values

The parameter list has the following structure:

Field No.	Field Name	Function
1	P. Nr	Here the parameter number is displayed. You can only change the field in menu *Free parameterization*.
2	Name	Display of the parameter name, in accordance with the parameter list
3	Ind	Display of the parameter index for indexed parameters. To see more than index 1, click on the [+] sign. The display is then expanded and all indices of the parameter are displayed
4	Index text	Meaning of the index of the parameter
5	Parameter value	Display of the current parameter value. You can change this by double-clicking on it or selecting and pressing *Enter*.
6	Dim	Physical dimension of the parameter, if there is one

5.5.5 Operation with USS

Using SIMOVIS / DriveMonitor, you can not only parameterize but also perform simple operation of the device. You can define a setpoint and display an actual value. For control purposes, you can define a control word and display a status word.

WARNING

When SIMOVIS/DriveMonitor is operated via the USS interface (X103), it may cause the technology option F01 to be influenced. This results in setpoint step jumps (cracks) during the cam disc function, and in incorrect processing of the traversing records (e.g. sporadic interruption of the axle motion) during automatic mode.

5.5.5.1 Requirements

For operation via the USS interface, you must implement minimum connector/binector wiring at the MASTERDRIVES VC/MC end:

Minimum settings

Wire the first word received via the serial interface SST1 Word1 to the control word of the drive:

Basic device parameters	SST1 binector	Comment
P554	B2100	required (acc. to fast parameterization)
P555	B2101	required (acc. to fast parameterization)
P558	B2102	not required for the basic functionality
P561	B2103	not required for the basic functionality
P562	B2104	not required for the basic functionality
P563	B2105	not required for the basic functionality
P564	B2106	not required for the basic functionality
P565	B2107	required (acc. to fast parameterization)
P568	B2108	required (acc. to fast parameterization)
P569	B2109	not required for the basic functionality
P571	B2111	required (acc. to fast parameterization)
P572	B2112	required (acc. to fast parameterization)
P573	B2113	not required for the basic functionality
P574	B2114	not required for the basic functionality
P575	B2115	not required for the basic functionality

Then wire the second word received via the serial interface word, SST1 Word2, to the setpoint of the drive (e.g. for speed setpoint P443 = K2002).

The drive must transmit the following values for monitoring purposes:

- Status_word1 in the first word transmitted (P707.1 = K032)
- The actual value in the second word transmitted (e.g. for speed actual value P707.2 = KK148).

You can also make this setting, which is the minimum required, with function *Quick Parameter Setting → Select Setpoint Source* (P368) = USS. In that case, however, only the control word wiring marked *necessary* is established.

Complete setting

Drive control and monitoring is performed in four process data words. For that purpose, set PZD = 4 during device selection. (See Section 5.5.2.3 "Selecting a device".)

In addition to the minimum setting, also establish the following wiring:

- To ensure that the double connectors are available with full resolution, also transmit the setpoint and actual value in Word3. Example of speed setpoint and speed actual value: Wire P443 = KK2032, P707.3 = KK148.
- Control_word2 and Status_word2 are also made available for operation. This is done by wiring the fourth word received via the serial interface (B2400...B2415) to Control_word2 of the drive.
- Transmit Status_word2 with the fourth word of the serial interface (P707.4 = K033).

With this parameterization, the full scope of operation and monitoring available under SIMOVIS / DriveMonitor is functional.

5.5.5.2 Operating functions

In the drive window, you can operate the device SIMOVERT MASTERDRIVES VC/MC by the following means:

Operating bar

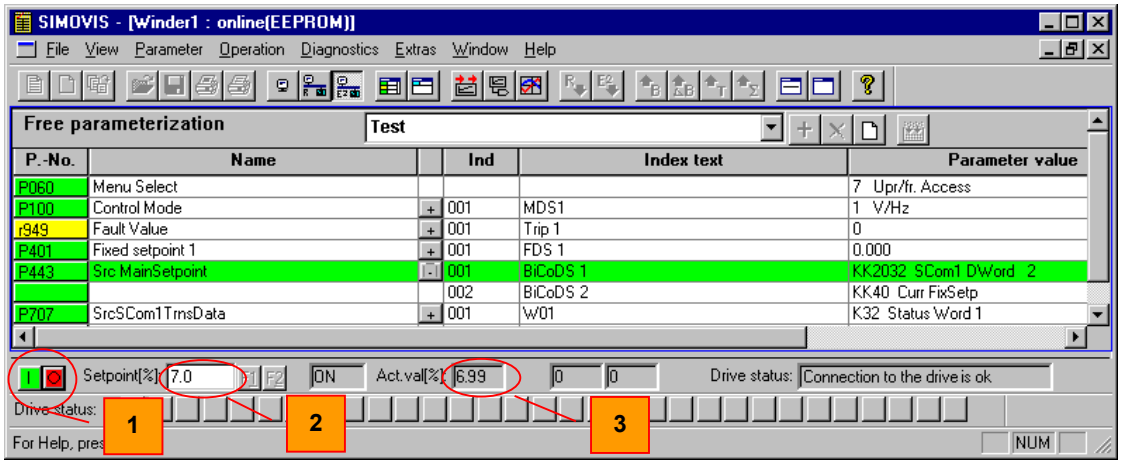

Fig. 5-28 Operating bar

- ON/OFF (Fig. 5-28 [1])
  You can activate or deactive the drive using the ON/OFF buttons or buttons on the status bar.
- Setpoint setting and actual value display (Fig. 5-28 [2] [3])
  On the status bar, you can specify a setpoint by clicking on the field Setpoint and entering a setpoint. You can then apply the setpoint by pressing *Enter*.

By **menu selection** you can explicitly operate the control word or monitor the status word.

- **Control word**
  You can call up the display of control word 1 or 2 with menu *Operation → Control word 1* or *Control word 2*.

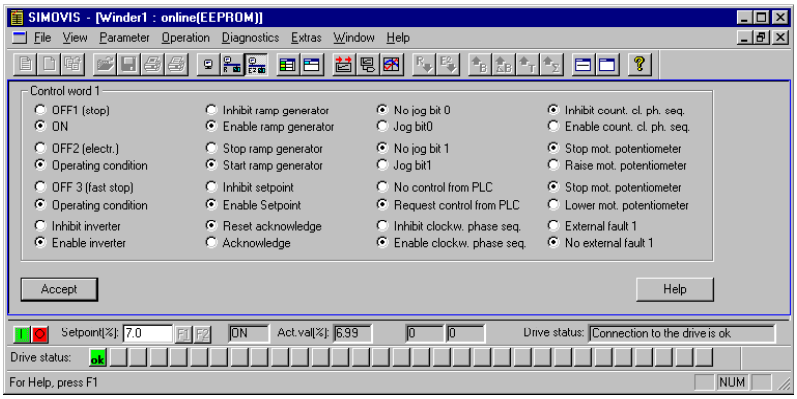

Fig. 5-29 Control word 1

In this display, you can set each control word bit individually. Apply the setting by clicking on button *Accept*.

- **Status word**
  You can call up the display of status word 1 or 2 with menu *Operation → Status word 1* or *Status word 2*.
  In this display, you can display the status word bits individually and in plain text.

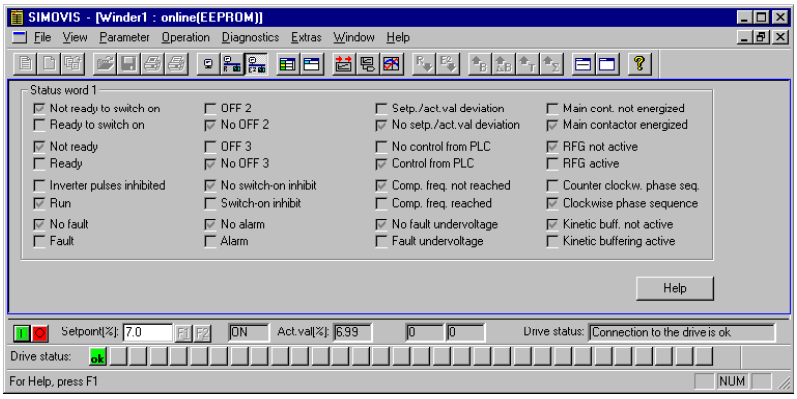

Fig. 5-30 Status word 1

5.5.6 Service functions

5.5.6.1 Upread (Upload) / download

You can read out and store the parameterization of the connected device with function *Upread*. You can call up the function with menu *Datei → Upread → Grundgerät...* (Fig. 5-31 [1]) or on the toolbar (Fig. 5-31 [2]). You can select either a complete upread of all parameters or readout of those values that are different from the factory setting.

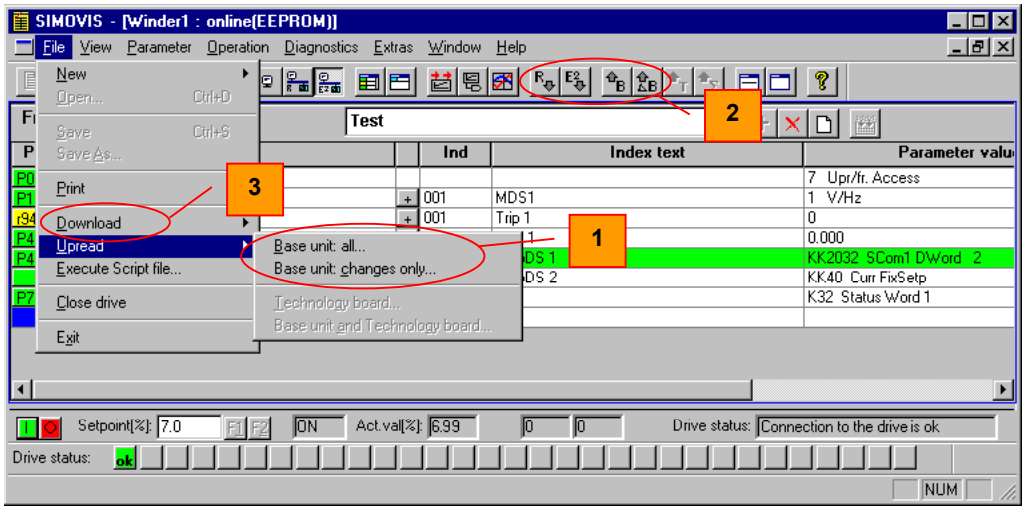

Fig. 5-31 Upread/Download

The values read out are stored under the name specified in a file with extension .dnl. After the function has finished, the message *UpRead(SIMOVIS) / UpLoad (DriveMonitor) for file XXX successful/terminated with errors* is displayed and you must acknowledge it.

You can transmit the files created in this way into a device with function *Download*. You can call up the function with menu *File → Download...* (Fig. 5-31 [3]) or on the toolbar (Fig. 5-31 [2]). You can transmit the parameter values both nonvolatilely (*Save [EEPROM]*) and volatilely (*Write [RAM]*).

NOTE

When you download with SIMOVIS / DriveMonitor, certain parameters (such as the power section definition P070) are not written. You will find the list of parameters that will not be written in the *.ini file assigned to the device type under the heading "[DontWrite]".
Example of a path of the *.ini file in MASTERDRIVES VC in SIMOVIS:
c:\Siemens\SIMOVIS\System\Drives\MASTERDRIVES VC(CUVC)\MDVV.ini
in DriveMonitor:
c:\Siemens\STEP7\p7vrvisx\system\device\MDVV\MDVV.ini

5.5.6.2 Script files

Description

Script files are used to parameterize devices of the MASTERDRIVES series as an alternative to downloading a parameter set. A script file is a pure text file that must have the filename extension ***.ssc**. The script file executes individual commands using a simple command syntax for the purpose of device parameterization. (You can write the script files using a simple text editor, such as WordPad.)

You can launch execution of a script file with menu command *File → Execute Script file*.

Advantages:

- Structured format according to functions/function modules possible, because
  - You can arrange the parameters in any order and insert any comments.
  - With jump functions (CALL commands) you can call up function modules (minimization of data to be managed, parameterization, of possible sources of error and of the configuration effort)
- Interactive communication e.g. by MSG / LOCALMSG commands (guiding the customer, final customer)
- It is possible to force, monitor, and wait for converter states and to start "background calculations" in the converter.

Commands

Commands are interpreted line by line. You can mark off comments with "REM" or a semicolon ";".

Tabs and blanks are permissible both as a separator between the command and the arguments and at the beginning of a line.

A line to be interpreted consists of a command and arguments, and can have the following appearance:

<tab><command><tab><1.argument><tab><2.argument>etc.

Example of a command sequence:

WRITE	60	0	5	(Meaning: Set par. 60 to value 5)
WAIT	1	0	5	(Meaning: Wait until the converter is in status drive setting)
WRITE	96	0	1	(Meaning: Set par. 96 to value 1)

- **READ**

  Command: READ

  Description: For reading parameter values. The value read is written to the logfile.

  Max. arguments: 2

  Syntax: READ PNU IND

  The parameter number is absolutely necessary.

  If index 255 is specified, all indices of the parameter are read out and written to the logfile.

  The index is optional.

  If you forget the index in an indexed parameter, or if the index is 0, index 1 is interpreted automatically. If the index is specified for an unindexed parameter, it is ignored.

- **WRITE**

  Command: WRITE

  Description: For writing parameter values.

  Max. arguments: 3

  Syntax: WRITE PNU IND PWE

  The parameter number is absolutely necessary.

  For an indexed parameter, 3 arguments must be present. If there are fewer than 3 arguments, the line is ignored.

  For an unindexed parameter, 2 or 3 arguments must be present. If there are 3 arguments, the 2nd argument is the index and is ignored. If there are fewer than 2 arguments, the line is ignored.

- **WAIT**

  Command: WAIT

  Description: A defined length of time is allowed to elapse before a certain parameter is assigned a defined value.

  Max. arguments: 4

  Syntax: WAIT PNU IND PWE1/PWE2/PWE3 ZEIT

  The parameter number is absolutely necessary.

  Specifying the time is optional. If you do not specify a time, the function waits until the expected parameter value comes about. If you specify a time in seconds (positive integer), the same condition applies but for no longer than the time specified. The WAIT command is ignored if SIMOVIS / DriveMonitor is in the offline state. For the parameter number, you can specify up to three values, which are ORed. The separator between the values is the character "/" and must be without gaps (no spaces or tabs). The parameter values are considered to be an argument.

  Specify the values (PWE) as they appear in the download file because they are not converted to numeric values.

  Example: 0000000001010111 and not 87
  0x21E and not 542

  For indexed parameters, 3 arguments must be present. If there are fewer than 3 arguments, the line is ignored.

  For unindexed parameters, 2 or 3 arguments must be present. If there are 3 arguments, the 2nd argument is the index and is ignored. If there are fewer than 2 arguments, the line is ignored.

- **TIME**

  Command: TIME

  Description: Allows the specified time to elapse before the following scripts are further processed.

  Max. arguments: 1

  Syntax: TIME ZEIT

  The TIME command is ignored if SIMOVIS / DriveMonitor is in the offline state. You must specify the time as a positive integer number of seconds. If there is more than one argument, the following arguments are ignored. If there is no argument after the command, the line is ignored.

- **CALL**

  Command: CALL

  Description: Another script file is executed and then execution of the calling script file is resumed at the next instruction.

  Max. arguments: 1

  Syntax: CALL PFAD

  Under PFAD, you must specify the script file to be called by its full pathname. If there is more than one argument, the following arguments are ignored. If there is no argument after the command, the line is ignored.

- **MSG**

  Command: MSG

  Description: The string following the command up to the end of line is displayed as information on the screen in a message box.

  Max. arguments: 1

  Syntax: MSG STRING

  The message box includes an *OK* and a *Cancel* button. The information symbol also appears next to the string. Execution of the script file is halted until you click on the *OK* button. If you click on the *Cancel* button, execution of the script file is terminated.

  Example:

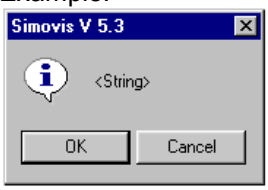

- **LOCALMSG**

  Command: LOCALMSG

  Description: This command works like MSG except that when you click on the "Cancel" button, only execution of the current script file is terminated and not script execution as a whole.

  Max. arguments: 1

  Syntax: LOCALMSG STRING

  In that way, you can terminate scripts that have been called up with the CALL command from a script file without terminating execution of the higher-level script(s).

- **PRINT**

  Command: PRINT

  Description: This command places the string specified as the argument up to the end of line in the LOG file.

  Max. arguments: 1

  Syntax: PRINT STRING

- **EXECDIALOG STRING**

  Command: EXECDIALOG STRING

  Description:
  - This command starts a dialog box from which you can launch individual script commands. You can enter the parameters in the dialog box. You can have this logged into the current logfile. (You can activate logging in the dialog box.) The following commands can be implemented at present: READ, WRITE, PRINT, TIME, CALL, WAIT, MSG, LOCALMSG

  The string following the command up to the end of line is displayed as information.

  Max. arguments: 1

  Syntax: EXECDIALOG STRING

  The following window is displayed, in which you can enter the commands interactively. If you click on button *Execute* the command set is executed. If you click on *Close*, the dialog box will be closed and script execution resumed.

  Example:

  EXECDIALOG This is a note

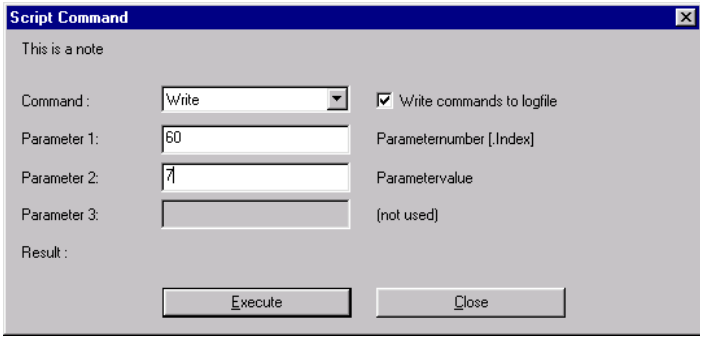

- **PARAMDIALOG**

  Command: PARAMDIALOG

  Description: This command starts the standard dialog box of SIMOVIS / DriveMonitor, in which you can change a parameter. It is the same dialog box that appears when you double-click on a parameter in the parameter list.

  Max. arguments: 2

  Syntax: PARAMDIALOG PNU IND

  Example: PARAMDIALOG 61 0

- **BEGINDESCRIPTION.....ENDDESCRIPTION**

  Command: BEGINDESCRIPTION
  .....
  ENDDESCRIPTION

  Description: This command brackets off any text, which is displayed to the user as information. This description is only evaluated with Drive ES.

  Max. arguments:

  Syntax: BEGINDESCRIPTION
  The description to be displayed
  ENDDESCRIPTION

- **BEGINLINKS.....ENDLINKS**

  Command: BEGINLINKS
  .....
  ENDLINKS

  Description: This command brackets off a list of information combinations. The information combinations are files, with which the content of the script file can be described in greater detail. This description is only evaluated with Drive ES.

  Max. arguments:

  Syntax: BEGINLINKS
  C:\SIMOVIS\Doc\querschneider.pdf
  C:\SIMOVIS\Doc\querschneider.jpg ENDLINKS

- **Logging script files**

  Script execution is logged by default. You can deactivate logging with the command Set Log Off or reactivate it with Set Log On. If logging is active, SIMOVIS / DriveMonitor creates a file with the same name as the script file being executed but with the extension "LOG". All commands of a transmission are logged in this file with their results. The "LOG" file is stored in the file containing the script file.

5.5.6.3 Trace

Trace is an add-on for SIMOVIS / DriveMonitor that permits visualization of recorded data. You can also store the data read out of the device and open it again later. It is also possible to import such data into text processing programs, such as Microsoft Word, or into spreadsheet programs, such as Microsoft Excel.

You can perform simple measurements of amplitudes and instants using two movable cursors.

WARNING

MASTERDRIVES MC:
If you are operating SIMOVIS/DriveMonitor-TRACE via the basic device interface X103, the technology option F01 will be affected. This causes sudden setpoint changes in the curve writing function (cracking) and, in automatic mode, it causes incorrect processing of the traversing data sets.

You can start the trace (device-internal cyclic store function) with menu command *Diagnostics → Trace* or on the toolbar .

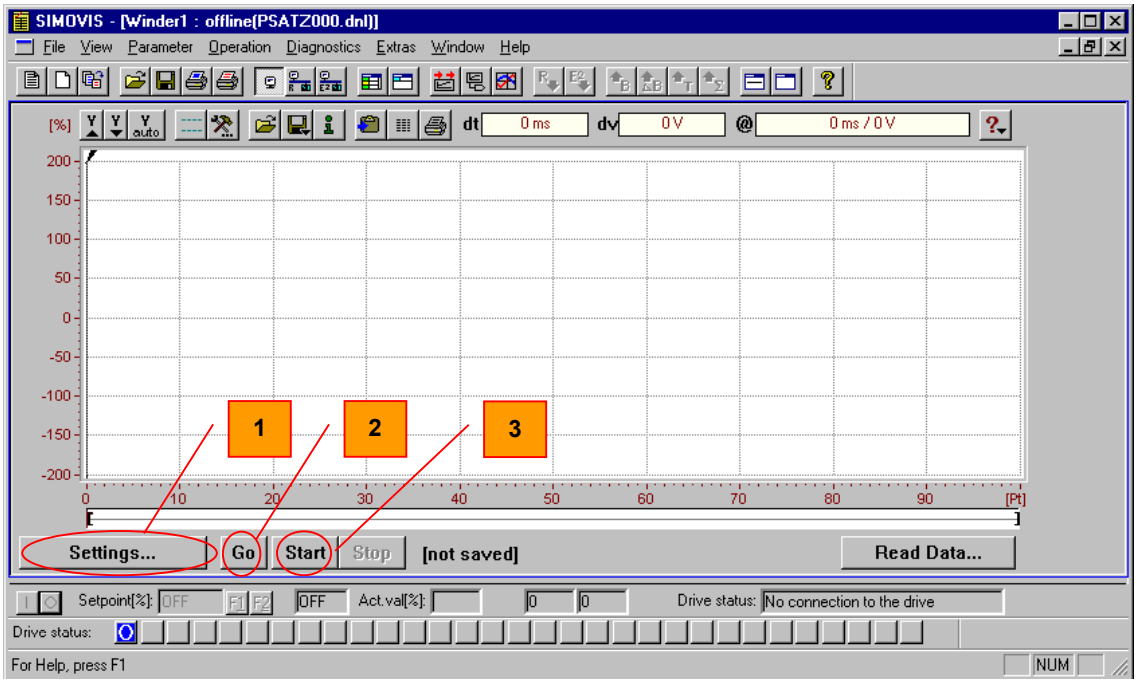

Fig. 5-32 Trace initial window

After an initialization phase, the initial window appears (Fig. 5-32) from which further operation starts.

Setting the recording data

With button *Record Settings* (Fig. 5-32 [1]) you can open the window for defining the recording data and the trigger condition.

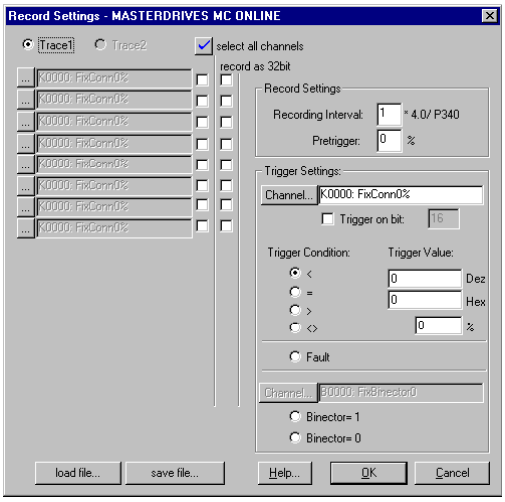

Fig. 5-33 Recording settings

In this window, you can specify the connectors you want to have recorded in the eight available channels. If you click on the associated button, the connectors available in the MASTERDRIVES VC/MC are displayed. You can deactivate unnecessary channels (checkbox). For double connectors, you can activate 32-bit recording.

In addition to the recording settings, you must also specify the sampling rate in field "Recording Interval", the trigger derivation action in field "Pretrigger", and the trigger setting. For the trigger setting, you can select the connector or binector via which triggering is performed (button *Channel*) and the trigger condition is specified. As trigger conditions for the connectors, you can use comparison operators less than (<), equal to (=), greater than (>), and not equal to (<>) and triggering on a certain bit of the connector (e.g. for status words) and the triggering on a fault. For connectors, specify the state (0 or 1) at which you want to trigger as the trigger source.

After you have exited the recording settings, recording is activated with the *Start* (Fig. 5-32 [3]) button. Recording starts as soon as the trigger condition is fulfilled. When recording is completed, the data are read out of the device and displayed in the trace window (see Fig. 5-34).

With button *Go* (Fig. 5-32 [2]), you can activate recording immediately without taking the trigger condition into account.

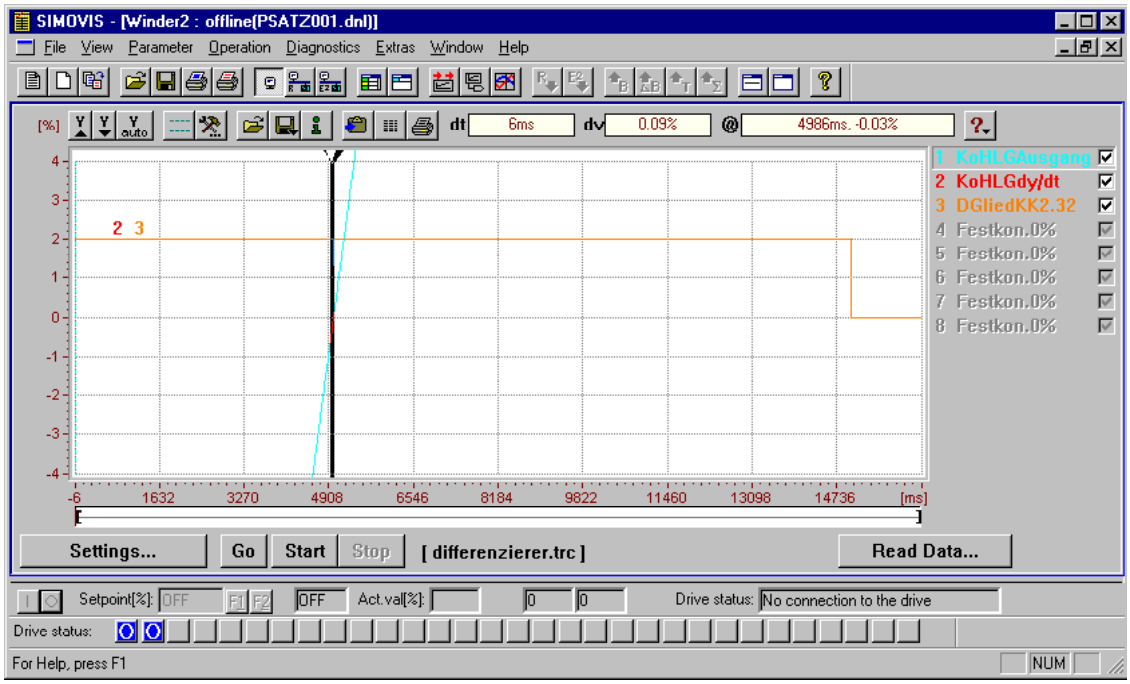

Fig. 5-34 Example trace

Display of the data

You can adapt the graphic display to your individual needs. Some displays only apply for the active curve (curve name highlighted). You can change the active curve by clicking on the curve description (to the right of the graphic window).

Trace settings

On the trace toolbar, you can call up the graphic trace settings with the function button . The trace settings contain the following tab cards:

- X- Scale

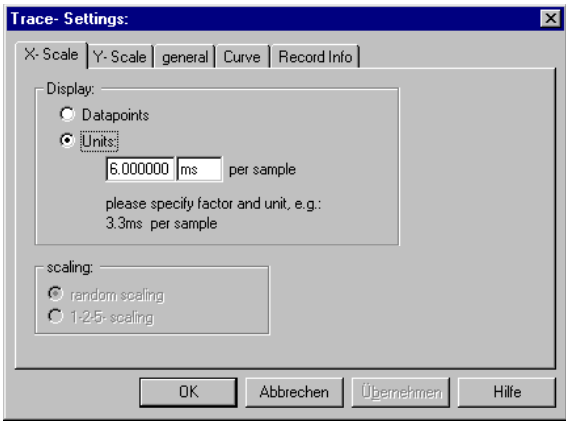

Display in data points:	Scaling is performed in data points. The triggering time is interpreted as the data point zero so that data points are scaled negatively to the left of the trigger time (pretrigger).
Display in units:	Scaling of the X-axis is performed taking the freely defined factor and unit text into account, e.g.: 3.2 ms per sampled value. This type of display is by default automatically correct in [ms] for trace recordings, which results in correct time scaling.

- Y-Scale (only valid for the active curve)

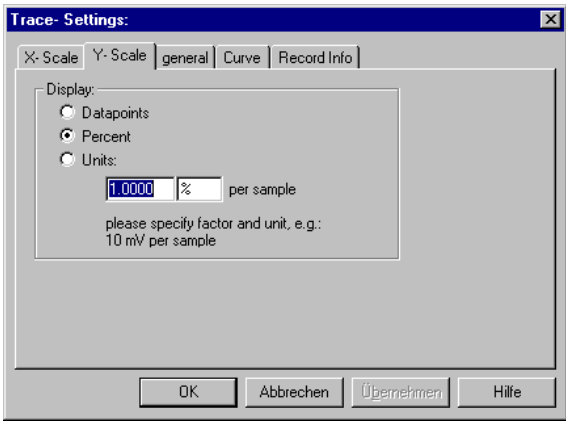

Display in data points:	Scaling is performed in data points.
Display as a percentage:	Scaling is performed as a percentage. 16384 (4000Hex) = 100 % for 16-bit curves and 1073741824 (40000000Hex) = 100 % for 32-bit curves.
Display in units:	Scaling of the Y-axis is performed taking the freely defined factor and unit text into account, e.g. 10 mV per sampled value.

- general
  Generally valid settings of the trace display.
  Visibility of the grid, cursor, and curve numbers.
  Background color
  Settings for the clipboard and WMF export

♦ Curve (only valid for the active curve)

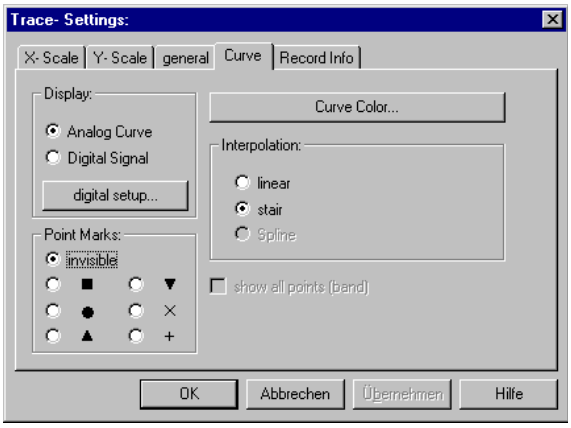

Settings for displaying the trace curve.

Analog Curve:	Display as a linear value	
Digital Signal:	Bitwise display of the 16-bit value recorded. You can define which bits are displayed in *digital setting*.	
Point Marks:	Way the individual data points are identified. Note: Data point identifiers are not displayed graphically until the zoom factor is large enough to allow you to distinguish between them.	
Interpolation:	linear:	Linear connection between the data points.
	stair:	Curve display as a step function.

Amplification setting

You can change the amplification of a trace (active curve). To do that, click on the appropriate button above the Y-scale. The *auto* button scales the Y-axis in such a way that the smallest and largest value recorded fit into the display.

Offset

To obtain a better overview, you can shift individual traces (active curve) and thus superimpose traces. Drag the Y-scale using the mouse (by drag and drop).

Defining the visible area

Using the *Zoombar* below the curve display, you can set the visible portion of the time axis using the movable boundaries [ ]. You can also set the zoom to *All* or to *last View* in the context menu (mouse click on the zoombar with the right mouse button).

Measurement of time and amplitude

Using the two freely movable cursor bars, you can ascertain both the absolute signal amplitude and the instant, and the difference between two signal amplitudes and instants.

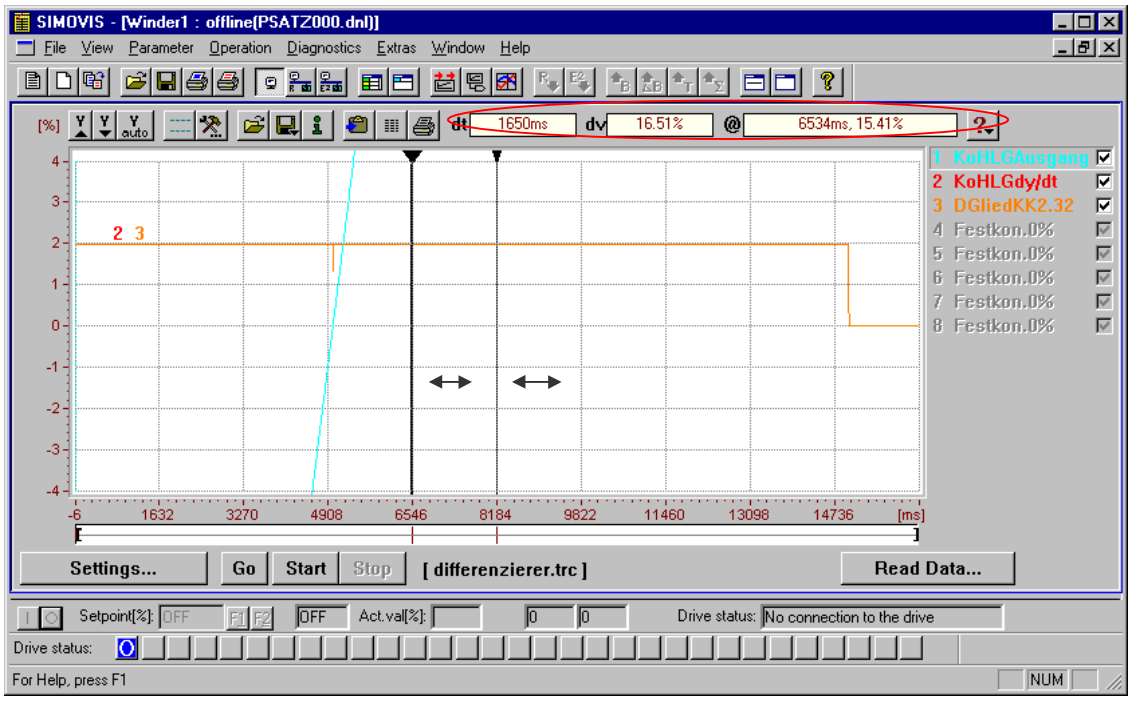

Fig. 5-35 Cursor

When you start the function the cursor bars are at the right-hand edge of the display. Then you can position them anywhere in the display by drag and drop. In field @, the absolute values of the position of the cursor you are clicking on are displayed, in field "dt" the time difference, and in field "dv" the signal amplitude difference between the positions of the two cursors (see Fig. 5-35).

Data management

You can save the trace curves recorded in SIMOVIS / DriveMonitor, export them, or reload them to view them again.

- Saving and exporting trace data:
  You can save trace data in the form of trace files (.trc), as a WMF file (e.g. for exporting or linking in text files) or as an ASCII file (display in columns, e.g. for export into spreadsheet programs).
  Select button *Save Trace file* on the toolbar.
- Loading trace data from the file:
  With button *Open trace file* you can load and view data stored as a trace file.
- Copying trace data into the clipboard:
  To copy the trace display directly into a graphics or text processsing program, you can use the button *Copy traces to clipboard* to copy it into the clipboard in WMF format and then paste it into the target program with *Insert*.
- Printing the curve display:
  With button *Print all visible traces* you can print out the curve display.

5.5.6.4 Diagnostic menu

In menu *Diagnostics* on the menu bar, you can display the parameters as predefined parameter lists for diagnostic purposes.

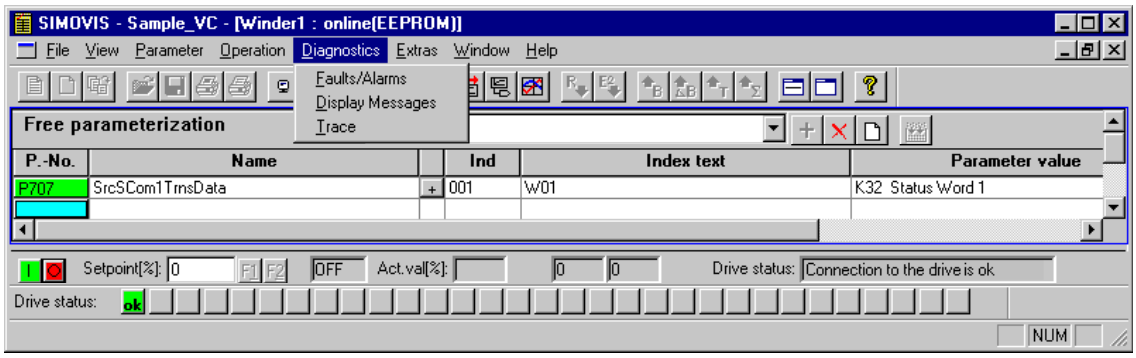

Fig. 5-36 Menu diagnostics

The parameter lists faults/alarms and messages/displays are available. In each of these, only those parameters are displayed that are relevant for the faults and alarms and for messages and displays. You can change or monitor the parameters just like in any other parameter list.

5.5.6.5 Menu prompted start-up

The function *Menu prompted start-up* is available under SIMOVIS / DriveMonitor for MASTERDRIVES VC/MC for simple parameterization with user guidance. In *Menu prompted start-up*, the user is guided through parameterization of the drive by forms. Here, not parameter numbers but texts and selection fields are shown, which makes operation easier to understand. This means that freedom of parameterization is restricted to some extent but is sufficient for standard applications.

Restrictions

The following restrictions apply to menu prompted start-up:

- Parameterization is only performed for the 1st data set (motor data set, function data set, BICO data set).
- A limited selection of setpoint sources is available, for MASTERDRIVES VC they are:
  - PMU and motor potentiometer
  - Analog setpoint and terminal block
  - Fixed setpoints via terminal block
  - Motor potentiometer via terminal block
  - Fixed setpoint via OP1S
  - OP1S and motor potentiometer
  - Serial interface (USS)
  - Profibus DP and terminal block

NOTE

The selection option of the setpoint sources is restricted by the type of closed-loop control selected.

- No parameterization of special solutions (externally excited synchronous machine, factory setting for elevators and hoisting gear) is possible.
- No parameterization of additional IO boards (EB1, EB2, SCI)

Procedure

You can call up prompted start-up from the drive window either with the button on the toolbar or with menu *Parameter→ Menu prompted start-up* (see Fig. 5-37 [1]).

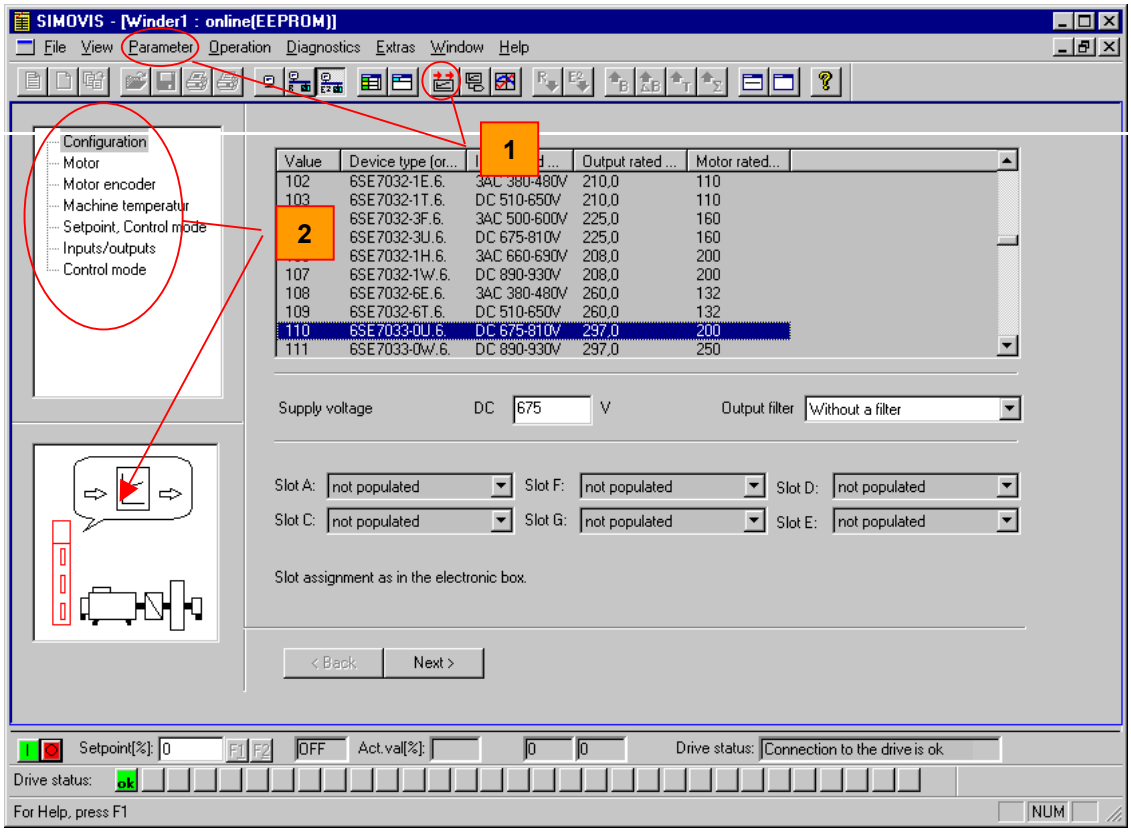

Fig. 5-37 Initial window for prompted start-up

In online mode, the field values displayed are initialized to the existing device parameterization, in offline mode to the existing offline data set. (If no special data set has been loaded, this is the factory setting)

After initialization, the form for parameterization of the device data (Fig. 5-37) appears as the initial window of Menu prompted start-up. All input forms have the following layout:
On the left-hand side, you will find the context display (Fig. 5-37 [2]) with an indication in words and graphics of the part of guided parameterization to which the form belongs. Below the form, you will find function buttons for switching between forms (*Next, Back*). In the form, fields for parameterization are displayed. The fields contain recommended values. You can change the values by typing them in directly or by selection from the dropdown list boxes.

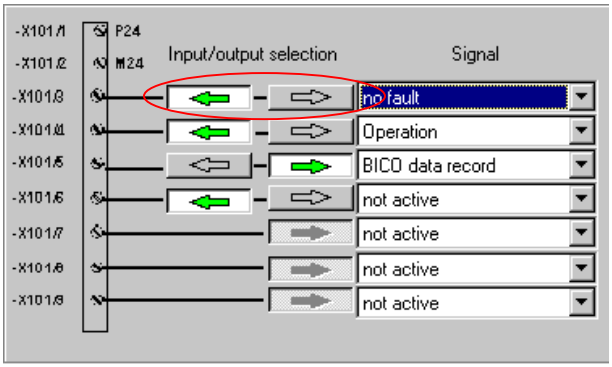

Fig. 5-38 Terminal wiring

When you specify the terminal wiring (Fig. 5-38), you can switch between the input and output for bidirectional inputs/outputs using the function buttons. For parameterization of the inputs and outputs (both the digital and the analog I/Os), only a limited selection of wiring options are offered in the dropdown list boxes.

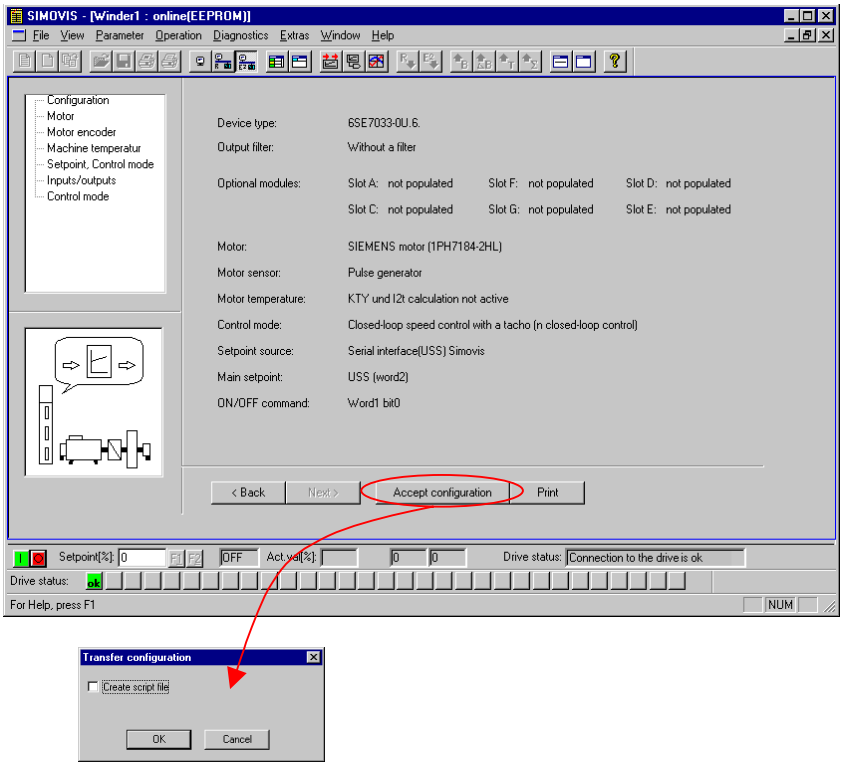

Fig. 5-39 Menu prompted start-up: Summary

To complete guided parameterization, a form with the most important basic data of the parameterization you have just performed is displayed by way of a summary. You can then transfer the values to the device with button *Accept configuration* (Fig. 5-38).

It is also possible to have a script file generated for the parameterization you have just performed (e.g. to parameterize other devices in exactly the same way, or to provide a record of the parameterization in offline mode).

NOTE

With menu prompted start-up, first the factory setting is made with *Accept configuration*, all previous parameterization in the device is reset. (The factory setting type is retained.)

For MASTERDRIVES MC, menu prompted start-up also exists for starting up the technology functions. The appearance and operation are analogous to that of menu prompted start-up for the basic device.

5.5.6.6 Learning a database

If a known device type has an unknown firmware version, it is possible to learn the parameter sets (names, factory setting values, min and max limits) under SIMOVIS / DriveMonitor.

NOTE

In order to establish a connection, it is necessary to specify a firmware version. It is advisable to select the predecessor version of the firmware version to be learned if possible.

Procedure for SIMOVIS

In the window "Bus Configuration" establish a connection with the device (see Section 5.5.2.4 "Testing the connection"). After that, you can learn the parameter set with button *Generate database* or with menu *Edit→ Create ("lern")*. This process can take several minutes. After that, this firmware version is also available to you for parameterization.

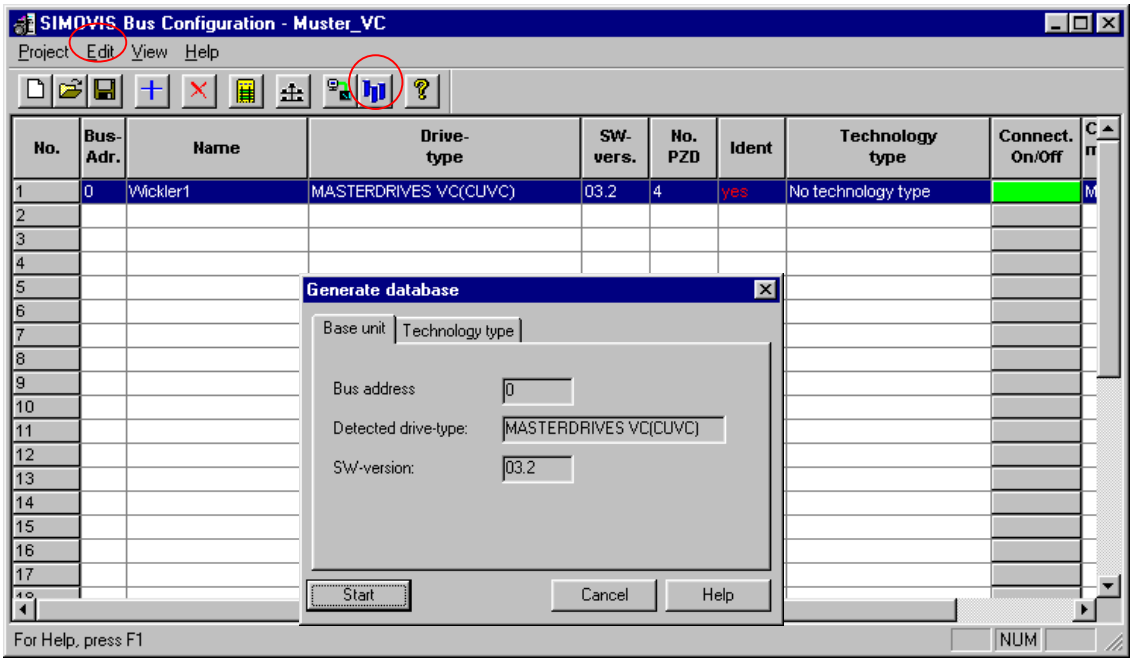

Fig. 5-40 Function "Learning"

Procedure for DriveMonitor

When you switch to online mode, device identification is performed. You can also trigger device identification with menu *Parameters→ Device identification*. If an unknown software version is detected, you are offered the option (Fig. 5-41 button *Generate database*), of generating the database. (This process takes several minutes.)

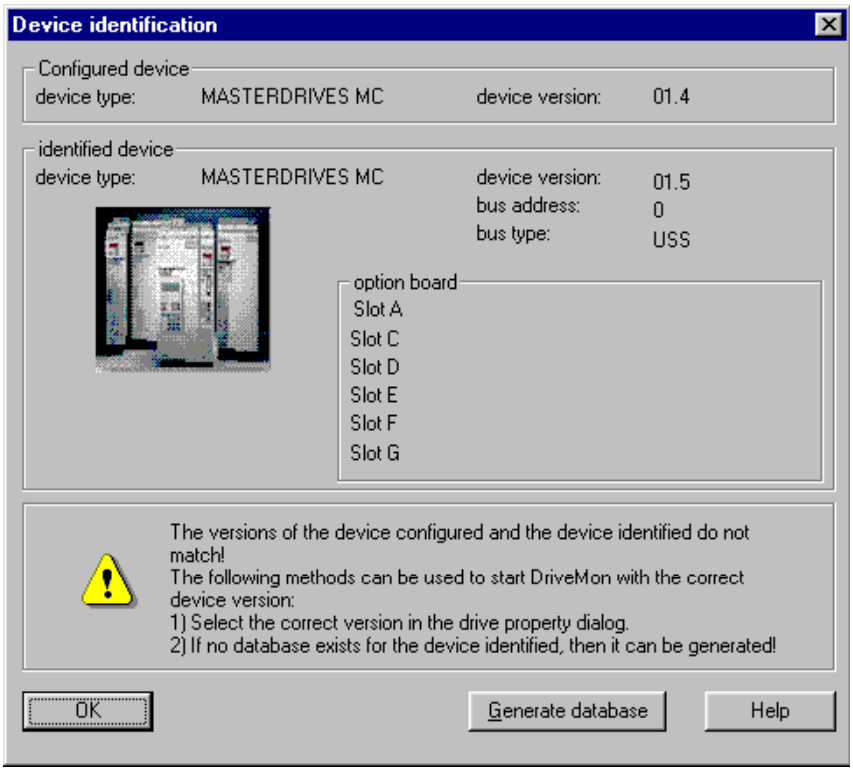

Fig. 5-41 Creating a database

NOTE

Because the device function scope is unknown for the unknown firmware versions, the functionality is restricted to a minimum in the parameterization window. The functions "Trace", "Menu prompted start-up", and the drive menus are therefore not available.

It is not possible to learn a known firmware version, the message *The database for VC/MC with software-version XXX already exists!* appears.

6 Parameterizing steps

Detailed parameterization

In general, parameterization can be subdivided into the following main steps:

1. Power section definition (P060 = 8)
2. Board definition (P060 = 4)
3. Drive definition (P060 = 5)
4. Function adjustment.

Not all parameterizing steps have to be run through in detail in each case during start-up. It is possible under certain conditions to combine some of the steps and shorten parameterization by using quick procedures. The following quick procedures are possible:

Quick parameterization

1. Parameterizing with user settings
   (Fixed setting or factory setting, P060 = 2)
2. Parameterizing with existing parameter files
   (Download, P060 = 6)
3. Parameterizing with parameter modules
   (Quick parameterization, P060 = 3)

Depending on the specific prevailing conditions, parameterization can be carried out either in detail or in accordance with one of the specified quick procedures.

By activating a fixed setting (P060 = 2), the parameters of the unit can also be reset to the original values.

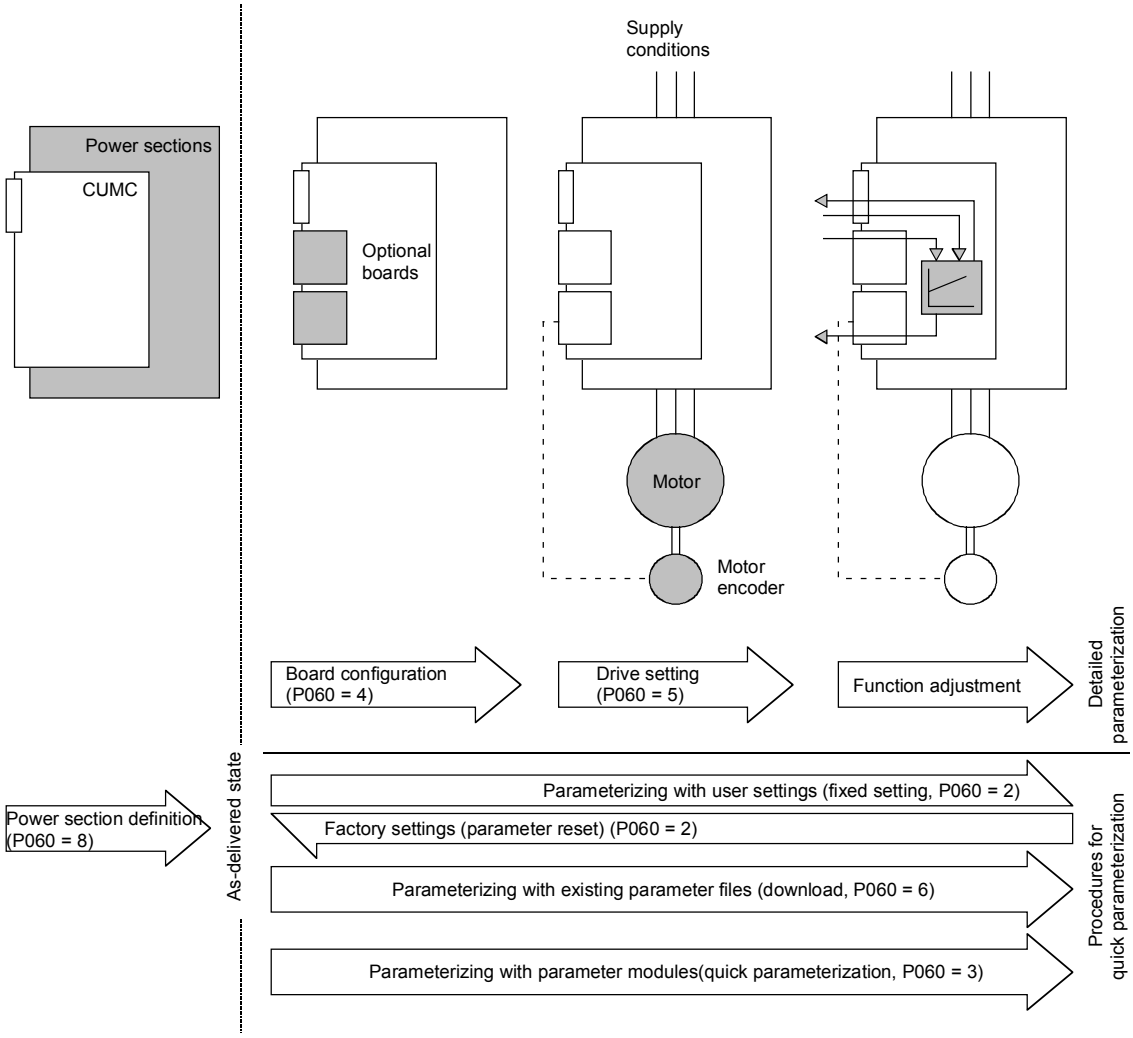

Fig. 6-1 Detailed and quick parameterization

6.1 Parameter reset to factory setting

The factory setting is the defined initial state of all parameters of a unit. The units are delivered with this setting.

You can restore this initial state at any time by resetting the parameters to the factory setting, thus canceling all parameter changes made since the unit was delivered.

The parameters for defining the power section and for releasing the technology options and the operating hours counter and fault memory are not changed by a parameter reset to factory setting.

Parameter number	Parameter name
P050	Language
P070	Order No. 6SE70..
P072	Rtd Drive Amps
P073	Rtd Drive Power
P366	Select FactSet
P947	Fault memory
P949	Fault value
U976	Serial number
U977	PIN

Table 6-1 Parameters that are not changed by the factory setting

If the parameters are reset to the factory setting via one of the parameters (SST1, SST2, SCB, 1.CB/TB, 2.CB/TB), the interface parameters of that interface are not changed either. Communication via that interface therefore continues even after a parameter reset to the factory setting.

Parameter number	Parameter name
P053	Parameterization enable
P700	SST bus address
P701	SST baud rate
P702	SST PKW number
P703	SST PZD number
P704	SST frame failure

*Table 6-2 The factory setting is made either via interface SST1 or SST2: Parameters that are not changed by the factory setting either. **None** of the indices of the parameters is changed.*

Parameter number	Parameter name
P053	Parameterization enable
P696	SCB protocol
P700	SST bus address
P701	SST baud rate
P702	SST PKW number
P703	SST PZD number
P704	SST frame failure

*Table 6-3 The factory setting is made via interface SCB2: Parameters that are not changed by the factory setting either. **None** of the indices of the parameters is changed.*

Parameter number	Parameter name
P053	Parameterization enable
P711 to P721	CB parameters 1 to 11
P722	CB/TB frame failure
P918	CB bus address

*Table 6-4 The factory setting is made either via interface 1.CB/TB or 2.CB/TB: Parameters that are not changed by the factory setting either. **None** of the indices of the parameters is changed.*

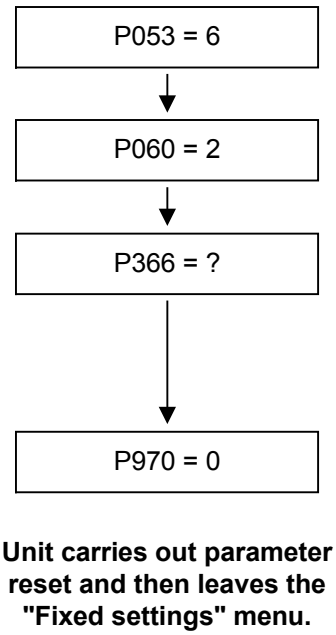

Grant parameter access
6: Parameter changes permitted via PMU and serial interface SCom1 (OP1S and PC)

Select "Fixed settings" menu

Select desired factory setting
0: Standard

Note: This parameter was correctly set prior to delivery of the unit and only needs to be changed in exceptional cases.

Start parameter reset
0: Parameter reset
1: No parameter change

Fig. 6-2 Sequence for parameter reset to factory setting

6.2 Detailed parameterization

Detailed parameterization should always be used in cases where the application conditions of the units are not exactly known beforehand and detailed parameter adjustments need to be carried out locally. An example of a typical application is initial start-up.

6.2.1 Power section definition

During the power section definition, the control electronics is informed about which power section it is working with. This step is necessary for Compact, chassis and cabinet units. On these units, the CUMC control board is accommodated in the electronics box and is not firmly connected to the power section.

The power section definition has already been completed in the as-delivered state. It is therefore only necessary on replacement of the CUMC or after loading a firmware version with a different parameter database (version ID: Change the 1st decimal place) and not under normal conditions.

CAUTION

If CUMC boards are changed over between different units without the power section being re-defined, the unit can be destroyed when connected up to the voltage supply and energized.

If a CUMC board which has already been parameterized is inserted into a unit with a different power section, an automatic parameterization via parameter P115 = 1 has to be carried out in the drive setting status (P60 = 5) after the power section definition.

The unit has to be switched to the "Power section definition" state for carrying out the power section definition. This is done by selecting the "Power section definition" menu. The power section is then defined in this menu by inputting a code number.

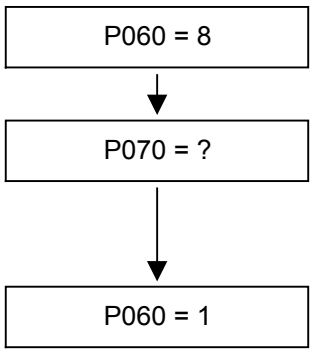

Select "Power section definition" menu

Input the code number for the unit concerned
The code number is allocated to the order numbers (MLFB).
The order number can be read off the unit's rating plate.
The list of units is on the following pages.

Return to parameter menu

Fig. 6-3 Sequence for performing the power section definition

NOTE

To check the input data, the values for the converter supply voltage in P071 and the converter current in P072 should be checked after returning to the parameter menu. They must tally with the data given on the unit rating plate.

Frequency converter, Compact PLUS AC-AC type

Order number	In [A]	PWE
6SE7011-5EP50	1.5	1
6SE7013-0EP50	3.0	3
6SE7015-0EP50	5.0	5
6SE7018-0EP50	8.0	7
6SE7021-0EP50	10.0	9
6SE7021-4EP50	14.0	13
6SE7022-1EP50	20.5	15
6SE7022-7EP50	27.0	17
6SE7023-4EP50	34.0	19

Inverter, Compact PLUS DC-AC type

Order number	In [A]	PWE
6SE7012-0TP50	2.0	2
6SE7014-0TP50	4.0	4
6SE7016-0TP50	6.1	6
6SE7021-0TP50	10.2	8
6SE7021-3TP50	13.2	12
6SE7021-8TP50	17.5	14
6SE7022-6TP50	25.5	16
6SE7023-4TP50	34.0	18
6SE7023-8TP50	37.5	20

Frequency converter, Compact AC-AC type

Order number	In [A]	PWE
6SE7016-1EA51	6.1	3
6SE7018-0EA51	8.0	9
6SE7021-0EA51	10.2	11
6SE7021-3EB51	13.2	18
6SE7021-8EB51	17.5	25
6SE7022-6EC51	25.5	35
6SE7023-4EC51	34.0	42
6SE7023-8ED51	37.5	46
6SE7024-7ED51	47.0	52
6SE7026-0ED51	59.0	56
6SE7027-2ED51	72.0	66

Inverter, Compact DC-AC type

Order number	In [A]	PWE
6SE7016-1TA51	6.1	4
6SE7018-0TA51	8.0	10
6SE7021-0TA51	10.2	12
6SE7021-3TB51	13.2	19
6SE7021-8TB51	17.5	26
6SE7022-6TC51	25.5	36
6SE7023-4TC51	34.0	43
6SE7023-8TD51	37.5	47
6SE7024-7TD51	47.0	53
6SE7026-0TD51	59.0	57
6SE7027-2TD51	72.0	67

Frequency converter, chassis-type AC-AC units

Order number	In [A]	PWE
6SE7031-0EE50	92.0	74
6SE7031-2EF50	124.0	82
6SE7031-8EF50	186.0 1) 155.0 2)	98
6SE7032-1EG50	210.0 1) 175.0 2)	102
6SE7032-6EG50	260.0 1) 218.0 2)	108
6SE7033-2EG50	315.0 1) 262.0 2)	112
6SE7033-7EG50	370.0 1) 308.0 2)	116
6SE7035-1EK50	510.0 1) 423.0 2) 3)	147
6SE7036-0EK50	590,0 1) 491,0 2) 3)	151

Inverter, chassis-type DC-AC units

Order number	In [A]	PWE
6SE7031-0TE50	92.0	75
6SE7031-2TF50	124.0	83
6SE7031-8TF50	186.0 1) 155.0 2)	99
6SE7032-1TG50	210.0 1) 175.0 2)	103
6SE7032-6TG50	260.0 1) 218.0 2)	109
6SE7033-2TG50	315.0 1) 262.0 2)	113
6SE7033-7TG50	370.0 1) 308.0 2)	117
6SE7035-1TJ50	510.0 1) 423.0 2) 3)	120
6SE7036-0TJ50	590,0 1) 491,0 2) 3)	123

1) theoretical rated output current at 3 kHz pulse frequency

2) rated output current at 5 kHz pulse frequency; the permissible rated output current will be reduced further at higher pulse frequencies (see technical data, derating)

3) This device is a chassis unit (from type J). The overload over 30 s is therefore limited to 1.36 x the rated output current at 5 kHz.

Water-cooled DC-AC inverter

Order number	In [A]	PWE
6SE7035-1TJ50 -1AA1 or -1AA0	510,0 1) 423 2) 3)	206
6SE7036-0TJ50 -1AA1 or -1AA0	590,0 1) 491 2) 3)	209

1) theoretical rated output current at 3 kHz pulse frequency

2) rated output current at 5 kHz pulse frequency; the permissible rated output current will be reduced further at higher pulse frequencies (see technical data, derating)

3) This device is a chassis unit (from type J). The overload over 30 s is therefore limited to 1.36 x the rated output current at 5 kHz.

6.2.2 Board configuration

During board configuration, the control electronics is informed in what way the installed optional boards have to be configured. This step is always necessary when optional boards CBx or SLB are used.

The unit must be switched to the "Board configuration" status for this purpose. This is done by selecting the "Board configuration" menu. In this menu, parameters are set that are required for adapting the optional boards to the specific application (e.g. bus addresses, baud rates, etc.). After leaving the menu, the set parameters are transferred and the optional boards are initialized.

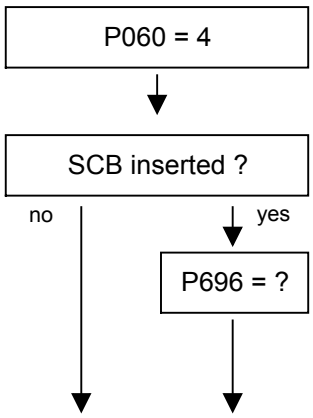

Select "Board configuration" menu

NOTE: Only possible with CUMC.
Not with Compakt PLUS units.

SCB protocol
0: SCI
1: USS 4-wire
2: USS 2-wire
3: Peer-to-Peer

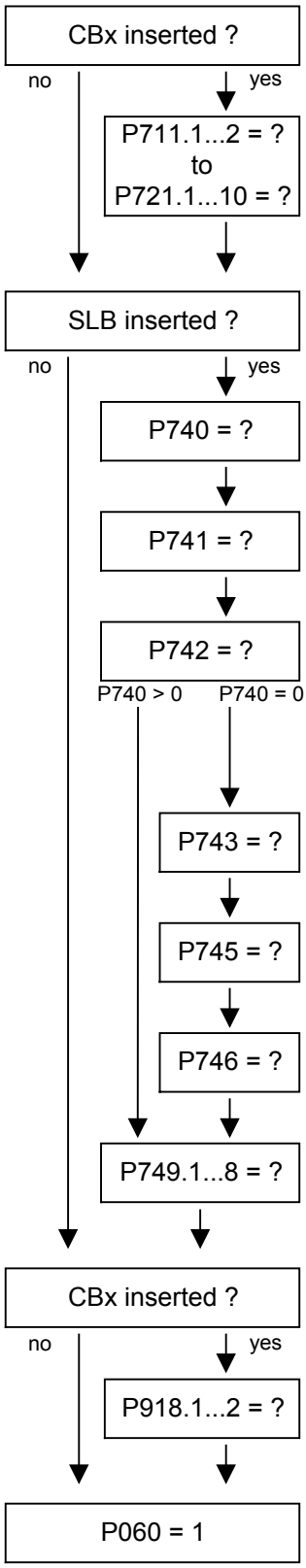

Enter the CB parameters 1 to 11 necessary for the inserted communications boards CBx
The necessary CB parameters and their significance can be derived from the function diagrams of the individual communications boards.

Enter the SLB module address
0: Unit operates as a dispatcher
greater than 0: Unit operates as a transceiver

Enter the SLB telegram failure time in ms
0: No monitoring
greater than 0: Monitoring time in ms

Enter the SLB transmit power (for plastic fiber-optic cables)
1: weak up to 15 m fiber-optic cable length
2: medium up to 25 m fiber-optic cable length
3: strong up to 40 m fiber-optic cable length
NOTE: If glass fiber-optic cables are used, the possible lengths are increased by the factor 7.5.

Enter the number of modules (incl. dispatcher) in the SIMOLINK ring

Enter the number of channels per module

Enter the SIMOLINK cycle time in ms

Enter the SLB read addresses

Enter the CB bus addresses

Return to the parameter menu

Board codes

The visualization parameter r826.x is used for displaying the board codes. These codes enable the type of installed electronic boards to be determined.

Parameter	Index	Position
r826	1	Basic board
r826	2	Slot A
r826	3	Slot B
r826	4	Slot C
r826	5	Slot D
r826	6	Slot E
r826	7	Slot F
r826	8	Slot G

If a technology board (T100, T300, T400) or an SCB1 or SCB2 is inserted in mounting positions 3 or 2, their board code can be found in the following indices:

Parameter	Index	Position
r826	5	Mounting position 2
r826	7	Mounting position 3

General board codes

Parameter value	Significance
90 to 109	Mainboards or Control Unit
110 to 119	Sensor Board (SBx)
120 to 129	Serial Communication Board (Scx)
130 to 139	Technology Board
140 to 149	Communication Board (Cbx)
150 to 169	Special boards (Ebx, SLB)

Special board codes

Board	Significance	Parameter value
CUVC	Control Unit Vector Control	92
CUMC	Control Unit Motion Control	93
CUMC+	Motion Control Compact PLUS	94
CUA	Control Unit AFE	106
CUSA	Control Unit Sinus AFE	108
SBP	Sensor Board Pulse	111
SBM	Sensor Board Encoder / Multiturn	112
SBM2	Sensor Board Encoder / Multiturn 2	113
SBR1	Sensor Board Resolver 1	114
SBR2	Sensor Board Resolver 2	115
SCB1	Serial Communication Board 1 (fiber-optic cable)	121
SCB2	Serial Communication Board 2	122
T100	Technology board	131
T300	Technology board	131
T400	Technology board	134
CBX	Communication Board	14x
CBP	Communication Board PROFIBUS	143
CBD	Communication Board DeviceNet	145
CBC	Communication Board CAN Bus	146
CBL	Communication Board CC-Link	147
CBP2	Communication Board PROFIBUS 2	148
EB1	Expansion Board 1	151
EB2	Expansion Board 2	152
SLB	SIMOLINK bus interface	161

6.2.3 Drive setting

During the drive setting, the control electronics is informed about the incoming voltage supply with which the drive converter is operating, about the connected motor and about the motor encoder. In addition, the motor control (V/f open-loop control or vector control) and the pulse frequency are selected. If required, the parameters necessary for the motor model can be calculated automatically. Furthermore, the normalization values for current, voltage, frequency, speed and torque signals are determined during the drive setting.

For start-up of the induction motor, first enter the manufacturer's parameters completely (see below):

- In doing so, you must observe whether the induction motor has a star or a delta connection.
- You must always use the S1 data from the rating plate.
- You must enter the rating data for **mains duty** (not converter duty).
- You must always enter the correct rated motor current **P102** (rating plate). If there are two different rated currents on the rating plate for special fan motors, you must use the value for M ~ n for constant torque (not M ~ n^2). A higher torque can be set with the torque and active-current limits.
- The accuracy of the rated motor current has a direct effect on the torque accuracy, as the rated torque is normalized to the rated current. If a rated current is increased by 4 %, this will also approximately result in a 4 % increase in the torque (referred to the rated motor torque).
- For group drives, you have to enter the total rated current **P102** = $x*I_{mot,rated}$.
- As the rated magnetizing current **P103** (not to be confused with the no-load current during operation with rated frequency **P107** and rated voltage **P101**) is usually not known, you can first enter 0.0 %. An approximation value is calculated using power factor (cosPHI) **P104** and then entered in P103.
  Experience shows that the approximation supplies values that are rather on the large side in the case of motors with a high rating (over 800 kW), whereas it supplies values that are slightly too low in the case of motors with low rating (below 22 kW).
  The magnetizing current is defined as a field-generating current component during operation at the rated point of the machine (U = **P101**, f = **P107**, n = **P108**, i = **P102**).
- P294 = 1 (≙ controlled, flux regulator not active) should be set for asynchronous motors. In V1.40 and higher, this is done in automatic parameterization.
- In field weakening, operation is permitted only up to twice the motor transition frequency (2 x P293).

- Input of rated frequency **P107**, rated speed **P108** and number of pole pairs **P109** is necessary.
- In the case of induction motors, you should enter in **P108** not the synchronous no-load speed, but the true motor rated speed, i.e. the slip frequency at rated load must be given by parameters **P107...P109**.
- The rated motor slip (1 - **P108**/60 x **P109**/**P107**) should usually be greater than 0.35 % x **P107**.
  These low values are, however, only achieved in the case of motors with a very high rating (above approx. 1000 kW).
  Motors with average rating (45..800 kW) have slip values around 2.0...0.6 %.
  Motors with low rating (below 22 kW) can also have slip values up to 10 %.
- If the rated motor frequency (engineered!) is below 8 Hz, you have to set **P107** = 8.0Hz in the drive setting. The rated motor voltage **P101** has to be calculated in the ratio 8 Hz / $f_{Mot,N}$ and the rated motor speed **P108** should result in a much greater slip:
  P108 = ((8 Hz - **P107**$_{old}$) x 60 / **P109**) + **P108**$_{old}$.

NOTE

When leaving the "Drive setting" menu, the entered parameter values are checked for plausibility. Parameter settings that are not plausible will lead to a fault. The wrongly set parameters are entered in parameter r949 (fault value).

If current control is selected as the motor control, a suitable sensor board (SBx) must be inserted beforehand and a permissible motor encoder selected. If this is not carried out, the unit will also generate a fault when it tries to leave the "Drive setting" menu.

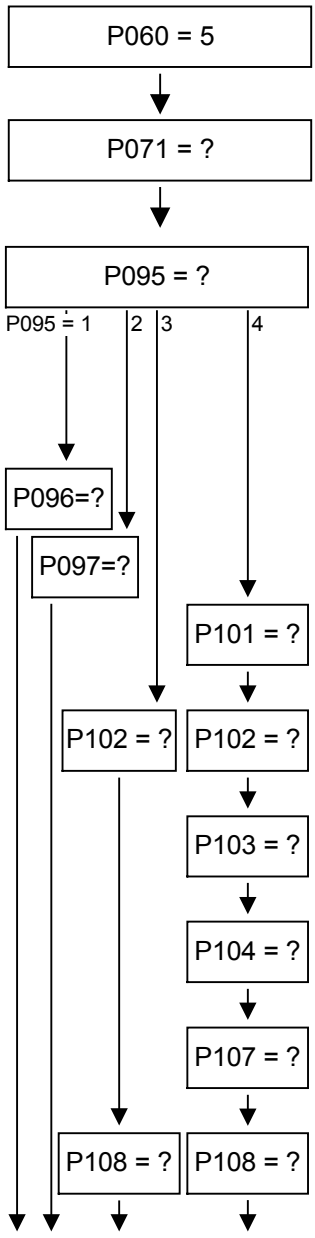

Select "Drive setting" menu

Input unit line voltage in V
AC units: RMS value of AC voltage
DC units: DC link voltage

Input of motor type
0: No motor connected
1: Synchronous servomotor 1FT6/1FK6
2: Asynchronous servomotor 1PH7(=1PA6)/1PL6/1PH4
3: Synchronous servomotor general
4: Asynchronous servomotor

Input of code number for the connected 1FK6/1FT6 motor (see list attached)

Input of code number for the connected 1PH7(=1PA6)/1PL6/1PH4 motor (see list attached)

Input of motor rated voltage in V according to rating plate

Input of motor rated current in A according to rating plate

Input of magnetizing current in A
If this is not known, enter "0" here. The value is then calculated by the automatic parameterization.

Input of power factor cos(phi) according to rating plate

Input of motor rated frequency in Hz according to rating plate

Input of motor rated speed in rpm according to rating plate

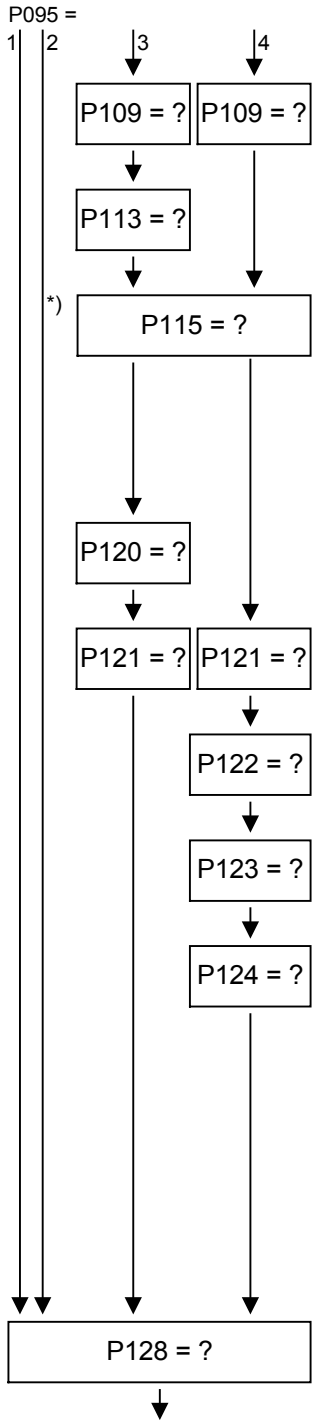

Input the pole pair number of the motor

Input the motor rated torques per rating plate in Nm

Start of calculation of derived motor data
For this purpose, set P115 from 0 to 1.
*) That is necessary with P095 = 2 only in the case of firmware versions 1.24 and older.
The motor parameters for setting the current control are calculated from the rating plate data. At the end of the calculation, P115 is automatically set to 0.

Input the main field inductance in mH

Input the stator resistance in mOhm

Input the total leakage reactance in mOhm
Pre-assigned during calculation of derived motor data (P115).

Input the stator reactance in mOhm
Pre-assigned during calculation of derived motor data (P115).

Input the rotor time constants in ms
Pre-assigned during calculation of derived motor data (P115).

NOTE: If automatic motor identification is performed after leaving the "Start drive" status (r001 = 005), no further inputs are necessary for parameters P120 to P124. For vector control (P290 = 0), automatic motor identification should always be performed (see section entitled "Motor identification").

Input the maximum output current in A

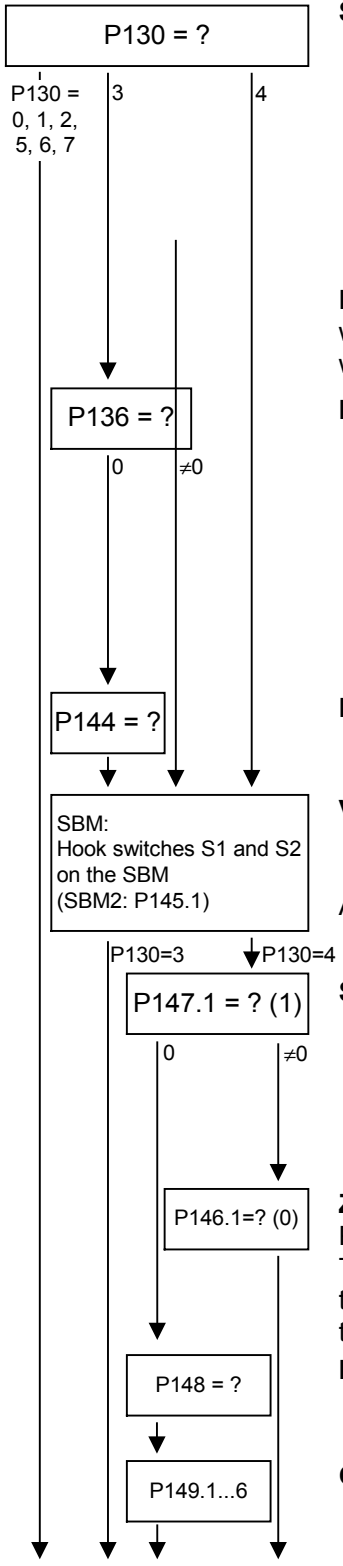

Select the motor encoder

0: Without encoder
1: 2-pole resolver (SBR)
2: Resolver with pole pair number of motor (SBR)
3: Encoder (SBM)
4: Multiturn encoder (SBM)
5: Pulse encoder in Slot C (SBP)
6: Pulse encoder not in Slot C (SBP)
7: Encoder without C/D track

NOTE: Asynchronous motors 1PA6, 1PL6, 1PH4, and 1PH7 with encoder are usually supplied with encoder ERN1381 without C/D tracks.

Increment encoder

0: Pulse number is not a power of 2.
Pulse number in P144 is applicable.
9: $2^9 = 512$
10: $2^{10} = 1024$
11: $2^{11} = 2048$
12: $2^{12} = 4096$
15: Increment = 2048 and zero pulse is not evaluated (from V1.24)

Motor encoder pulse number

Voltage supply encoder

Is set at the factory to 5 V to match the standard encoder used with SIEMENS motors.

Also see function diagram 240.

Setting of P147:

0: No standard encoder, parameterization in P148, P149
1: Encoder EQN1325 (Heidenhain) EnDat
2: Encoder ECN1313 (Heidenhain) EnDat
6: EnDat (Heidenhain)
7: EQI1325 (Heidenhain)

Zero offset in revolutions

Project planning note:
The travel range of the linear axes must be within the range of the encoder. Otherwise the mapping range will be shifted with the zero offset.

Increment multiturn encoder

Configuration Protocol

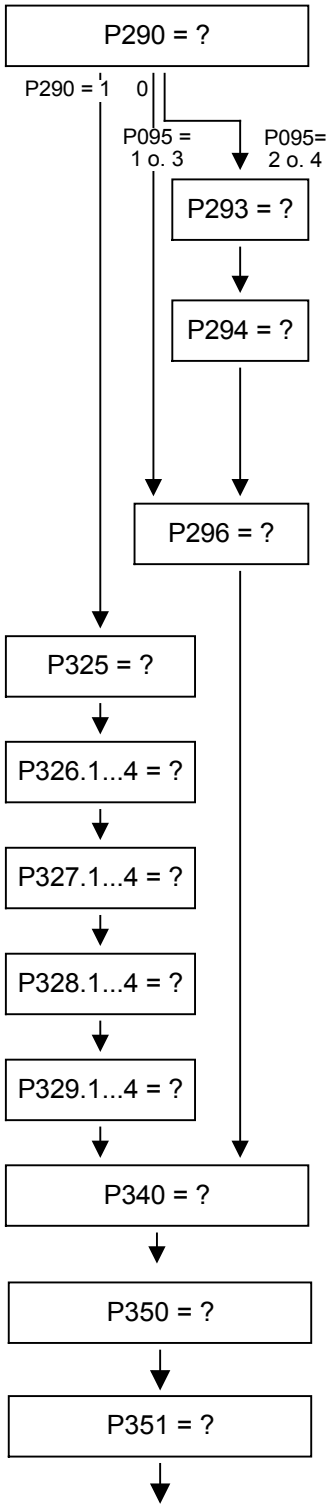

Select type of current control
0: vector contol, e.g. for variable-speed operation with 1FT-, 1PH4-, 1PH7(=1PA6)- and 1PL6 motors
1: v/f open-loop control e.g. for induction machines without encoder

Input the field weakening frequency in Hz
Pre-assigned during calculation of derived motor data (P115).

Select the flux control
0: Closed-loop, flux controller active
1: Open-loop, flux controller not active
As a rule, P294 = 1 should be set on asynchronous machines. This is performed by automatic parameterization in V1.40 and higher.

Select the current controller dynamics
0: Highest dynamics
1: Average dynamics
2: Lowest dynamics

Input the voltage boost at frequency = 0 in %

Input the frequency points for curve 1 in Hz

Input the voltage points for curve 1 in V

Input the frequency points for curve 2 in Hz

Input the voltage points for curve 2 in V

Input the pulse frequency in kHz
The length of the shortest time slot T0 is also defined with the pulse frequency.

Input the reference value for all current variables
(normalization variable for current limitations and current setpoints and current actual values).

Input the reference value for all voltage variables
(normalization variable for voltage limitations and voltage setpoints and voltage actual values).

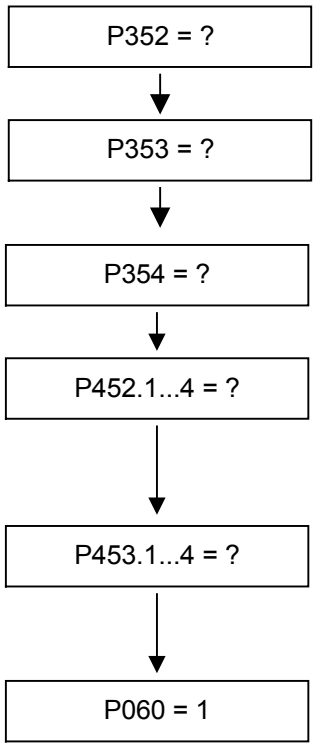

Input the reference value for all frequency variables
(normalization variable for frequency limitations and frequency setpoints and frequency actual values).

Input the reference value for all speed variables
(normalization variable for speed limitations and speed setpoints and speed actual values).

Input the reference value for all torque variables
(normalization variable for torque limitations and torque setpoints and torque actual values).

Input the maximum speed in positive direction of rotation in % (referred to P353).
If asynchronous motors are used (P095 = 2 or 4), only operation up to twice the motor corner frequency (2 x P293) is permissible in field weakening.

Input the maximum speed in negative direction of rotation in % (referred to P353).
If asynchronous motors are used (P095 = 2 or 4), only operation up to twice the motor corner frequency (2 x P293) is permissible in field weakening.

Return to the parameter menu

NOTE

When leaving the "Drive setting" menu, the entered parameter values are checked for plausibility. Parameter settings that are not plausible will lead to a fault. The wrongly set parameters are entered in parameter r949 (fault value).

If current control is selected as the motor control, a suitable sensor board (SBx) must be inserted beforehand and a permissible motor encoder selected. If this is not carried out, the unit will also generate a fault when it tries to leave the "Drive setting" menu.

6.2.4 Motor identification

From Version V1.30 onwards, automatic motor identification is available. In the case of Siemens motors (P095 = 1 or 2) the motor type is first selected in P096 or P097. In the case of non-Siemens motors (P095 = 3 or 4), the rating plate data and number of pole pairs have to be entered, and then automatic parameterizing is called with P115 = 1.

After exit from the "drive initial start-up" status with P060 = 1, P115 = 2 is set and hence motor identification is selected. The converter must now be switched in within 30 s so that measuring can start. The alarm A078 is set during the 30 s.

WARNING

The motor shaft can move slightly during the measurement operation. The motor cables are live. Voltages are present at the converter output terminals and hence also at the motor terminals; they are therefore hazardous to touch.

DANGER

It must be ensured that no danger for persons and equipment can occur by energizing the power and the unit.

If measurement is not started within 30 s or if it is interrupted by an OFF command, error F114 is set. The converter status during measurement is "Motid-Still" (r001 = 18). Measurement is ended automatically, and the converter reverts to the status "Ready for start-up" (r001 = 009).

Depending on the motor size (rotor time constant), measurement will take 2 to 10 minutes.

In current-controlled mode (P290 = 0), automatic motor identification should **always** be performed during initial start-up.

6.2.5 Function adjustment

Once the description of the hardware has been completed, function adjustment has to take place. The function blocks available in the unit are selected, interconnected and adjusted to suit the specific application. Parameterization is carried out in the parameter menu. The function diagrams serve as a basis for the function adjustment. Please refer to the parameter list for more detailed information on the individual parameters. The interconnectable binectors and connectors are listed in the relevant binector and connector lists.

The indicated lists are attached hereto.

6.3 Quick parameterization procedures

The following quick procedures are always used in cases where the application conditions of the units are exactly known and no tests and related extensive parameter corrections are required. Typical examples of applications for quick parameterization are when units are installed in standard machines or when a unit needs replacing.

6.3.1 Parameterizing with user settings

During parameterization by selecting user-specific fixed settings, the parameters of the unit are described with values that are permanently stored in the software. In this manner, it is possible to carry out the complete parameterization of the units in one step just by setting a few parameters.

The user-specific fixed settings are not contained in the standard firmware; they have to be compiled specifically for the customer.

NOTE

If you are interested in the provision and implementation of fixed settings tailored to your own requirements, please get in contact with your nearest SIEMENS branch office.

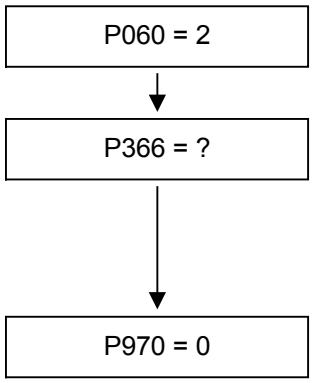

Select "Fixed settings" menu

Select desired user setting
0: Factory settings
1...3: (Not implemented at present)
4: User setting 1
5: User setting 2
...

Start parameter reset
0: Parameter reset
1: No parameter change

Fig. 6-4 Sequence for parameterizing with user settings

6.3.2 Parameterizing by loading parameter files (download P060 = 6)

Download

When parameterizing with download, the parameter values stored in a master unit are transferred to the unit to be parameterized via a serial interface. The following can serve as master units:

1. OP1S operator control panel
2. PCs with SIMOVIS/DriveMonitor service program
3. Automation units (e.g. SIMATIC)

The interfaces SCom1 and SCom2 with USS protocol of the basic unit (SCom2 not in the case of units of the Compact PLUS type) and field bus interfaces used for parameter transfer (e.g. CBP for PROFIBUS DP) can serve as serial interfaces.

Using download, all changeable parameters can be set to new values.

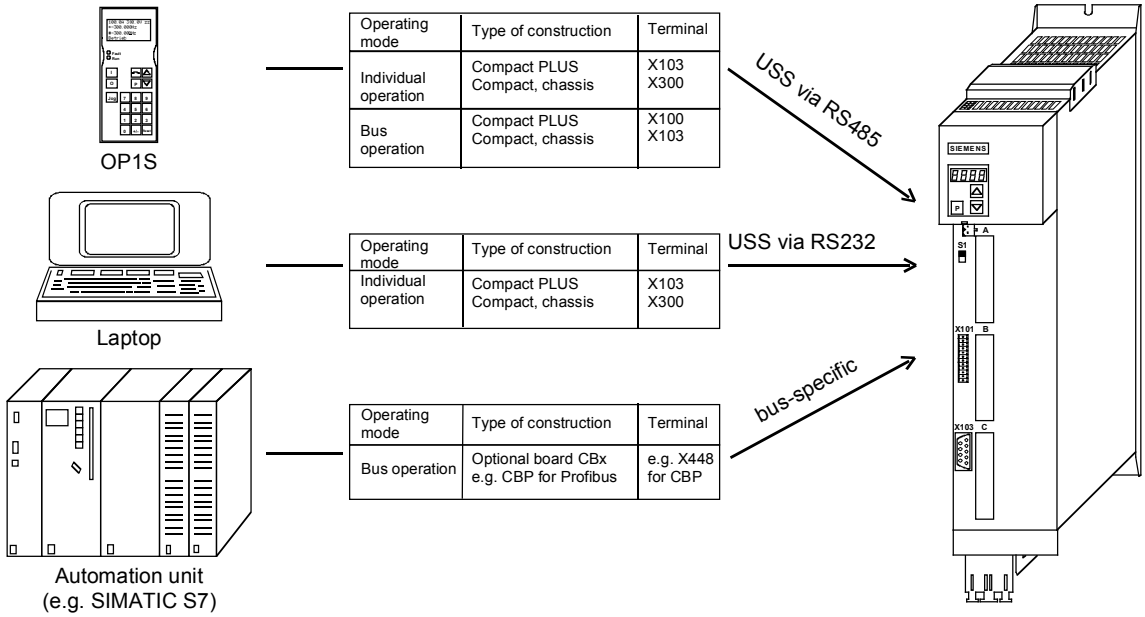

Fig. 6-5 Parameter transfer from various sources by download

Downloading with the OP1S

The OP1S operator control panel is capable of upreading parameter (Upread or Upload) sets from the units and storing them. These parameter sets can then be transferred to other units by download. Downloading with the OP1S is thus the preferred method of parameterizing replacement units in a service case.

During downloading with the OP1S, it is assumed that the units are in the as-delivered state. The parameters for the power section definition are thus not transferred. If a PIN has been entered to release optional technology functions, this is also not overwritten during downloading. (Refer to Section "Detailed parameterization, power section definition")

Parameter number	Parameter name
P060	Menu selection
P070	Order No. 6SE70..
P072	Rtd Drive Amps(n)
P073	Rtd Drive Power(n)
U977	PIN

Table 6-5 Parameters you cannot overwrite during download

The OP1S operator control panel also stores and transfers parameters for configuring the USS interface (P700 to P704). Depending on the parameterization of the unit from which the parameter set was originally upread, communication between the OP1S and the unit can be interrupted on account of changed interface parameters after downloading has been completed. To enable communication to re-commence, briefly interrupt the connection between the OP1S and the unit (disconnect OP1S or the cable). The OP1S is then newly initialized and adjusts itself after a short time to the changed parameterization via the stored search algorithm.

Download with SIMOVIS / DriveMonitor

By using the SIMOVIS/DriveMonitor PC program, you can upread (from SIMOVIS, upload from DriveMonitor) parameter sets from the units, store them on the hard disk or on floppy disks and transfer them back to the units by download. You have the additional possibility of editing the parameters off-line and of creating parameter files especially for your application. These files do not have to contain the complete parameter scope. They can be limited to parameters that are relevant for the particular application.

On downloading with SIMOVIS/DriveMonitor, no power section data are written to protect the device. Similarly, overwriting of the communication parameters and the PIN enable are prevented.

Parameter number	Parameter name
P060	Menu selection
P070	Order No. 6SE70..
P072	Conv.current(s)
P073	Conv.power(s)
P700	IF bus address
P701	IF baudrate
P702	IF no. of PKW
P703	IF no. of PZD
P836	Optional card data download
P850 – P899	OP special parameters
P918	CB bus address
P952	Number of faults
P970	Factory setting
P971	EEPROM accept.
U976	Product number
U977	PIN

Table 6-6 Parameters that cannot be changed on downloading with SIMOVIS/DriveMonitor

NOTE

Successful parameterization of the units by download is only ensured if the unit is in the "Download" status when the data is being transferred. Transition into this status is achieved by selecting the "Download" menu in P060.

P060 is automatically set to 6 after the download function has been activated in the OP1S or in the SIMOVIS service program.

If the CU of a converter is replaced, the power section definition has to be carried out before parameter files are downloaded.

If only parts of the entire parameter list are transferred by download, the parameters of the following table must always be transferred too, as these automatically result during the drive setting from the input of other parameters. During download, however, this automatic adjustment is not carried out.

Parameter number	Parameter name
P109	Pole pair number
P352	Reference frequency = P353 x P109 / 60
P353	Reference frequency = P352 x 60 / P109

Table 6-7 Parameters that always have to be loaded during download

6.3.3 Parameterizing with parameter modules (quick parameterization, P060 = 3)

Pre-defined, function-assigned parameter modules are stored in the units. These parameter modules can be combined with each other, thus making it possible to adjust your unit to the desired application by just a few parameter steps. Detailed knowledge of the complete parameter set of the unit is not required.

Parameter modules are available for the following function groups:

1. Motors
2. Motor encoders
3. Control types
4. Setpoint and command sources

Parameterization is effected by selecting a parameter module from each function group and then starting quick parameterization. In accordance with your selection, the necessary unit parameters are set to produce the desired control functionality. The parameters necessary for fine adjustment of the control structure (all the parameters of the respective function diagrams) are automatically adopted in the user menu (P060 = 0).

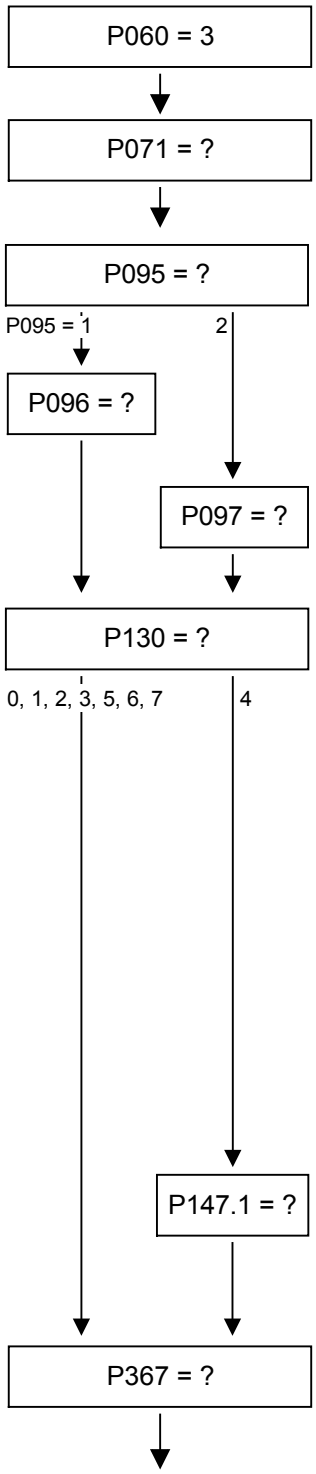

Select "Quick Parameterization" menu

Input of unit line voltage in V
AC Units: RMS value of AC voltage
DC Units: DC link voltage

Input of motor type
0: No motor connected
1: 1FT6/1FK6 synchronous servo-motor
2: 1PH7(=1PA6)/1PL6/1PH4 induction servo-motor

Input the code number for the connected 1FK6/1FT6 motor (see attached list)

Input the code number for the connected 1PH7(=1PA6), 1PH4, 1PL6 motor (see attached list)

Select motor encoder
0: Without encoder
1: 2-pole resolver
2: Resolver with pole pair number of motor
3: Encoder 2048/rev.
4: Multiturn encoder 2048/rev.
5: Pulse encoder 1024/rev.
7: Encoders without C/D track 2048/rev (SW V1.30 and later)
The absolute initial position is not set on encoders without a C/D track. These can only be used on asynchronous machines. The position is corrected via a zero pulse (if connected).
1PA6, 1PL6, 1PH4 and 1PH7 asynchronous motors with encoder:
These motors are normally supplied with an ERN1381 encoder without C/D track.

Selection of a multiturn enocder
1: EQN1325 (2048 lines)
2: ECN1313 (2048 lines)
6: EnDat
7: EQI1325 (32 lines)

Select type of control
0: V/f open-loop control
2: Torque control
3: Speed control

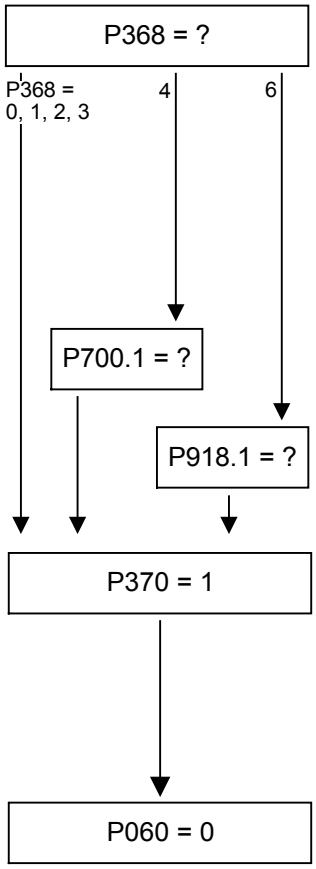

Select setpoint and command source
- 0: PMU (not for Compact PLUS)
- 1: Analog input and terminal strip
- 2: Fixed setpoints and terminal strip
- 3: MOP and terminal strip
- 4: USS
- 5: not used
- 6: PROFIBUS (CBP2)
- 7: OP1S and fixed setpoints
- 8: OP1S and MOP

Input the USS address

Input the PROFIBUS address

Start of quick parameterization
- 0: No parameter change
- 1: Parameter change according to chosen combination of parameter modules

Note:
After start-up an automatic factory setting of P366 = 0 takes place, followed by the associated parameterization.

Return to user menu

NOTE

Parameterizing with parameter modules is carried out only in BICO data set 1 and in function data set 1.

If data set changeover is required, you will have to carry out a further detailed parameterization using parameter modules after having performed quick parameterization.

Quick parameterization is effected in the "Download" converter status.

Function diagram modules

Function diagram modules (function diagrams) are shown on the following pages for the parameter modules stored in the unit software. There is a module on every page beginning at the top for each of the following:

- Setpoint and command source,
- Control type and
- Motor encoder or the relevant sensor board (SBx)

Cutting lines have been marked in between the individual function diagram modules to enable the modules to be separated and then individually combined, i.e. you can create a function diagram to exactly fit the selected combination of parameter modules. This will give you an overview of the functionality parameterized in the units and of the necessary assignment of the terminals.

The function parameters and visualization parameters specified in the function diagrams are automatically adopted in the user menu and can be visualized or changed there.

Setpoint and command source

Terminal strip and analog input

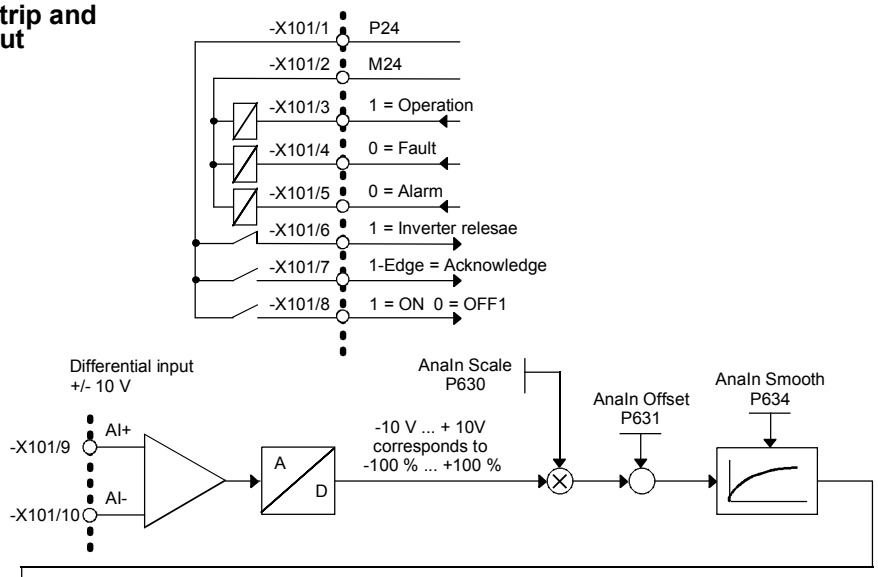

Control type:

Speed control

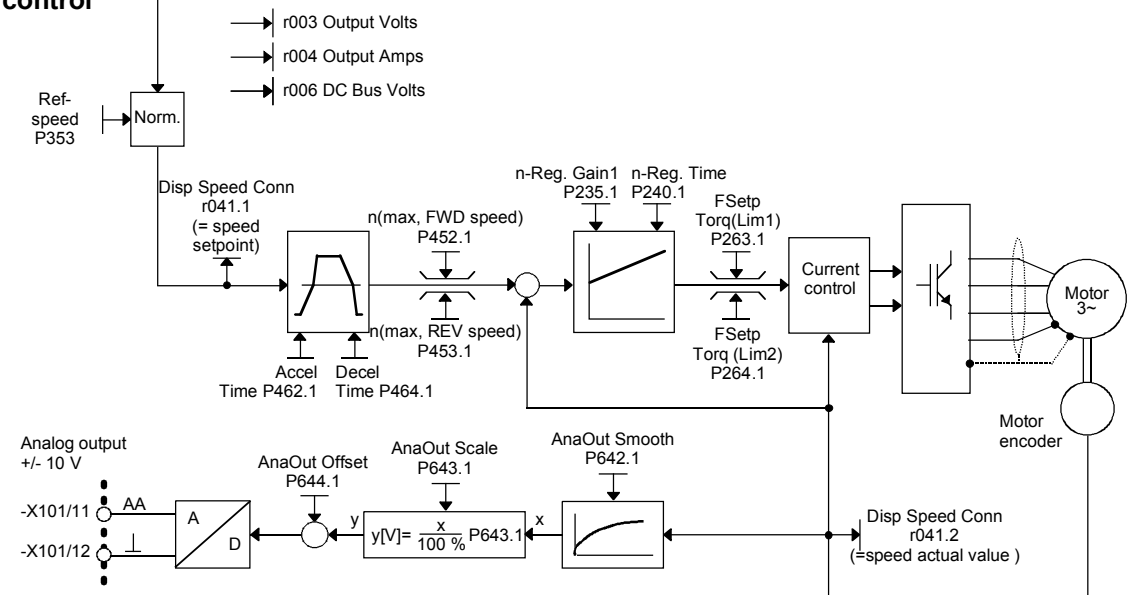

Type of encoder:

Resolver

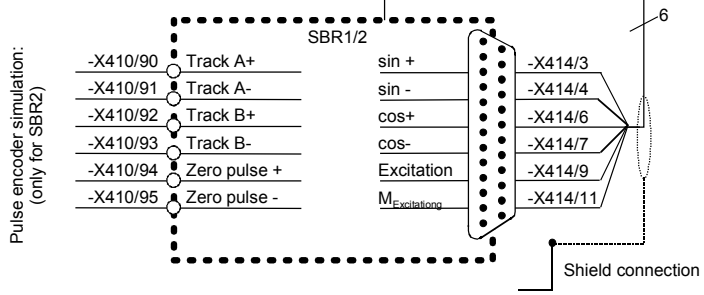

Data of resolver to be connected:
- 2-pole

Data of pulse encoder simulation:
- 1024 pulses/revolution

Setpoint and command source:

Terminal strip and fixed setpoints (FSetp)

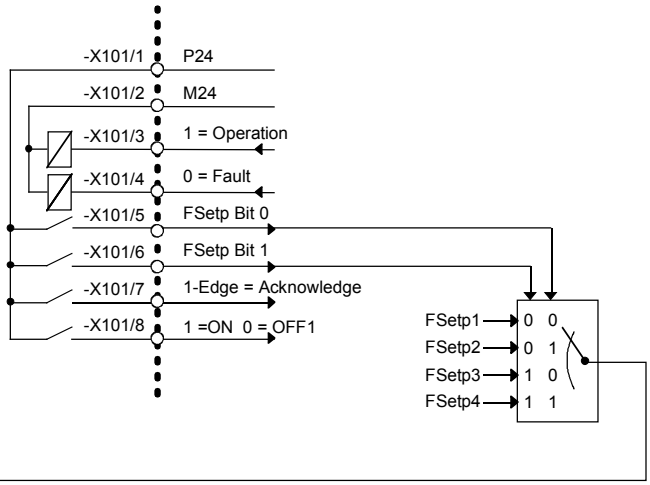

Control type:

Torque control

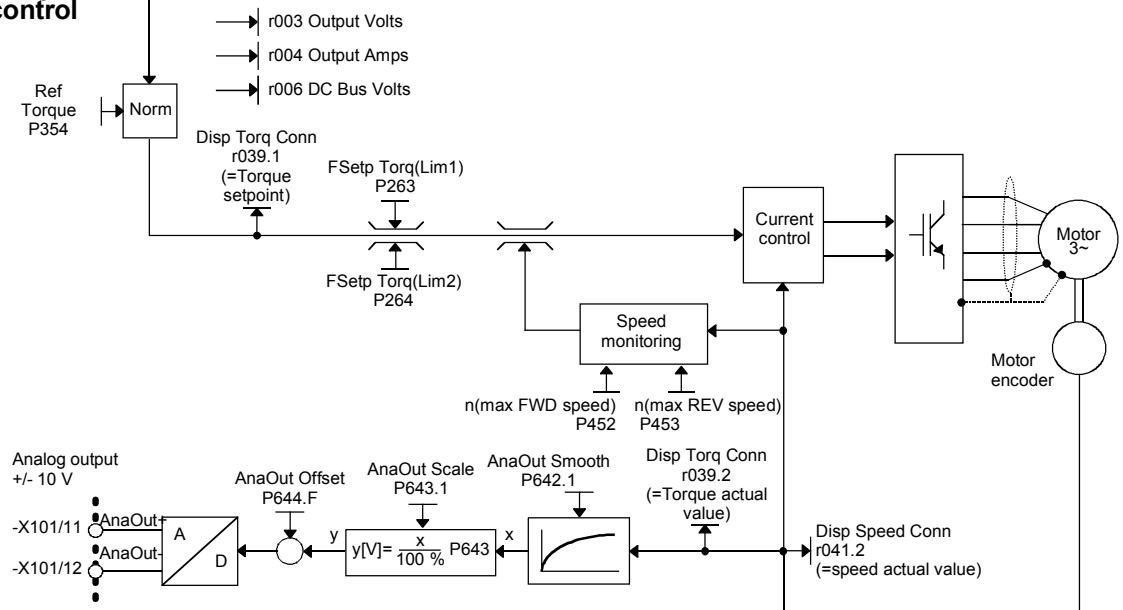

Type of encoder:

Pulse encoder

Full information on pulse encoder connection is given in the SBP operating instruction (Order No. 6SE7087-6NX84-2FA0).

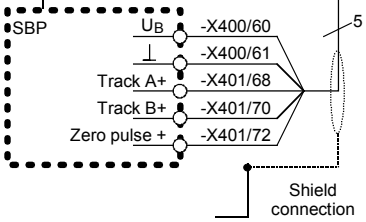

Data of pulse encoder to be connected:
- HTL encoder (15 V)
- 1024 Inc.
- without control track

Setpoint and command source

Terminal strip and motorized potentiometer

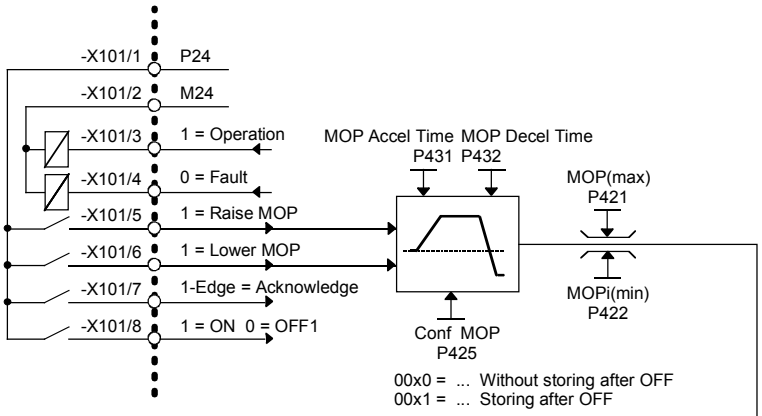

Type of control

V/f control

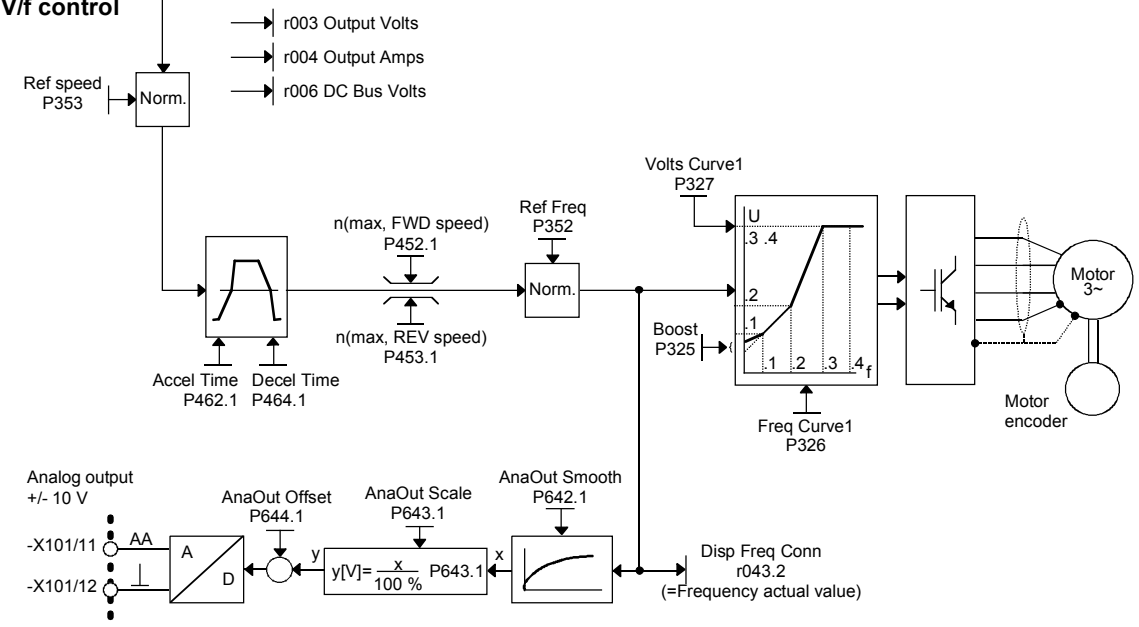

Type of encoder:

Without encoder

Setpoint and command source

PMU (not for Compact PLUS units)

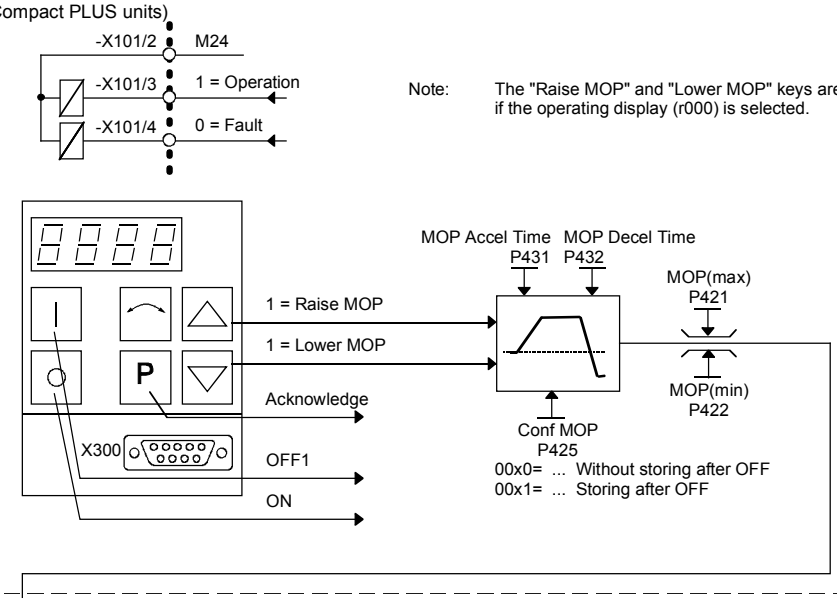

Setpoint and command source

USS

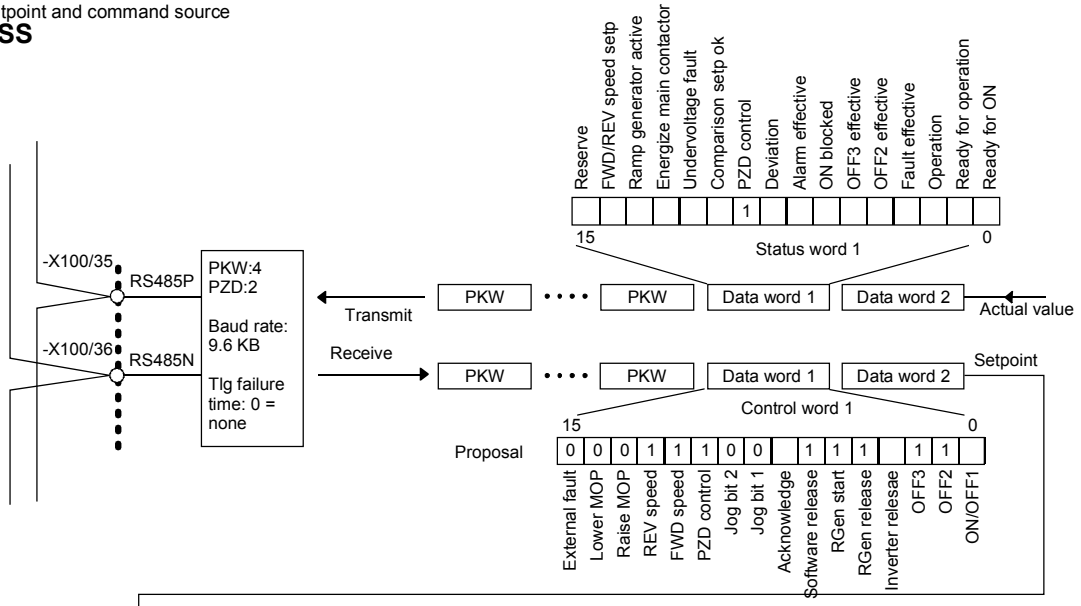

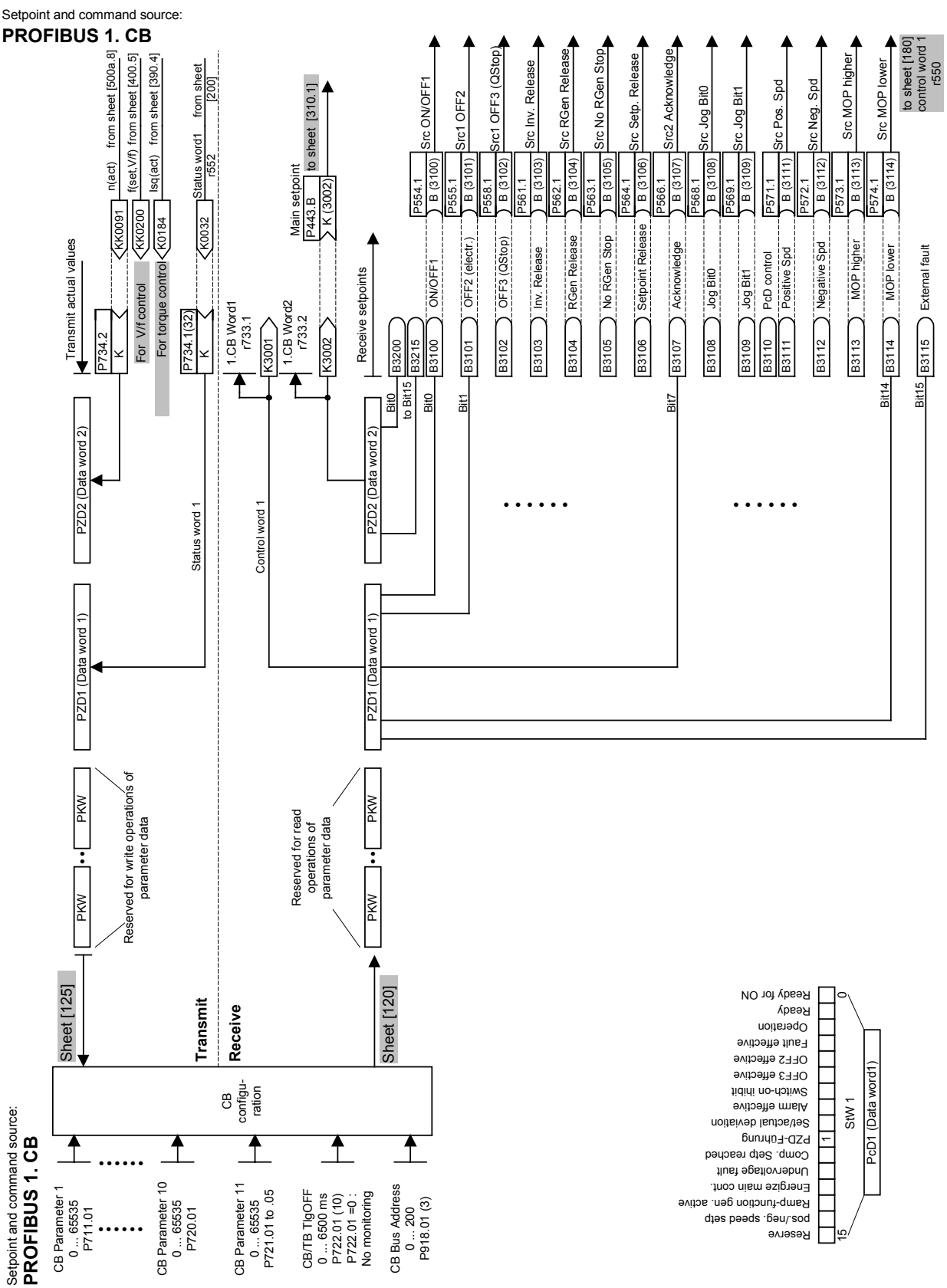
Setpoint and command source:
PROFIBUS 1. CB
Transmit actual values
n(act) from sheet [500a.8]
f(set,V/f) from sheet [400.5]
Isq(act) from sheet [390.4]
Status word1 from sheet [200]
r552
KK0091
KK0200
K0184
K0032
P734.2
K
P734.1(32)
K
For V/f control
For torque control
Main setpoint
P443.B
K (3002)
to sheet [310.1]
1.CB Word1
r733.1
1.CB Word2
r733.2
K3001
K3002
Receive setpoints
B3200
B3215
B3100
B3101
B3102
B3103
B3104
B3105
B3106
B3107
B3108
B3109
B3110
B3111
B3112
B3113
B3114
B3115
Bit0
to Bit15
Bit0
Bit1
Bit7
Bit14
Bit15
ON/OFF1
OFF2 (electr.)
OFF3 (QStop)
Inv. Release
RGen Release
No RGen Stop
Setpoint Release
Acknowledge
Jog Bit0
Jog Bit1
PcD control
Positive Spd
Negative Spd
MOP higher
MOP lower
External fault
P554.1
B (3100)
P555.1
B (3101)
P558.1
B (3102)
P561.1
B (3103)
P562.1
B (3104)
P563.1
B (3105)
P564.1
B (3106)
P566.1
B (3107)
P568.1
B (3108)
P569.1
B (3109)
P571.1
B (3111)
P572.1
B (3112)
P573.1
B (3113)
P574.1
B (3114)
Src ON/OFF1
Src1 OFF2
Src1 OFF3 (QStop)
Src Inv. Release
Src RGen Release
Src No RGen Stop
Src Setp. Release
Src2 Acknowledge
Src Jog Bit0
Src Jog Bit1
Src Pos. Spd
Src Neg. Spd
Src MOP higher
Src MOP lower
to sheet [180]
control word 1
r550
PZD2 (Data word 2)
PZD1 (Data word 1)
Status word 1
Control word 1
PKW
Reserved for write operations of parameter data
Reserved for read operations of parameter data
Sheet [125]
Sheet [120]
Transmit
Receive
CB configu-ration
Setpoint and command source:
PROFIBUS 1. CB
CB Parameter 1
0 ... 65535
P711.01
CB Parameter 10
0 ... 65535
P720.01
CB Parameter 11
0 ... 65535
P721.01 to .05
CB/TB TlgOFF
0 ... 6500 ms
P722.01 (10)
P722.01 =0 :
No monitoring
CB Bus Address
0 ... 200
P918.01 (3)
Reserve
pos./neg. speed setp
Ramp-function gen. active
Energize main cont.
Undervoltage fault
Comp. Setp reached
PZD-Führung
Setpoint deviation
Alarm effective
Switch-on inhibit
OFF3 effective
OFF2 effective
Fault effective
Operation
Ready
Ready for ON
15
1
0
SW 1
PcD1 (Data word1)

7 Functions

7.1 Basic functions

7.1.1 Time slots

The microprocessor system processes the function blocks sequentially. Each function block requires a certain calculating time and must be re-processed within a specified time. The microprocessor system therefore makes different times available to each individual function block. These times are designated as time slots.

A time slot is the period of time within which all output values of a function block are newly calculated.

NOTE

The following texts refer to the function diagram 702 "Setting and monitoring the sampling times and sampling sequence".

The terms "Time slot" and "Sampling time" have a synonymous meaning in the documentation and are interchangeable.

7.1.1.1 Time slots T0 to T20

T0 represents the shortest possible time slot within which a function block can be processed. The duration of time slot T0 is a function of the selected pulse frequency (P340), calculated as per the following formula:

$$T0 = {}^{1}\!/_{\text{Pulse frequency}}$$

This means:

- With a low pulse frequency (P340), the time slot T0 is longer. A large amount of calculating time is available for the individual function blocks. The reaction time is slower.
- With a high pulse frequency (P340), the time slot T0 is shorter. There is not much calculating time available for the individual function blocks. The reaction time is faster.

The time slot T0 forms the basis for all further time slots.

The time slots T1 to T10 and time slot T20 are available in addition to time slot T0. The time slots T1 to T10 are derived from time slot T0.

The time slot T20 is used as an archive for function blocks that are not needed. Function blocks stored in time slot T20 are not processed.

Overview of the time slots

Time slot	As a function of T0	Duration in ms at P340 = 5 kHz	Duration in ms as P340 = 7.5 kHz
T0	T0	0.2	0.133
T1	2 x T0	0.4	0.267
T2	4 x T0	0.8	0.533
T3	8 x T0	1.6	1.067
T4	16 x T0	3.2	2.133
T5	32 x T0	6.4	4.267
T6	64 x T0	12.8	8.533
T7	128 x T0	25.6	17.067
T8	256 x T0	51.2	34.133
T9	512 x T0	102.4	68.267
T10	1024 x T0	204.8	136.533
T20	none	archive	archive

7.1.1.2 Processing sequence

The time slots are processed in the sequence of their priority, whereby time slot T0 has the highest priority and time slot T10 the lowest priority. Each higher-priority time slot can interrupt a lower-priority time slot.

The sequence control of the converters and inverters starts every time slot automatically. If a higher-priority time slot is started, although another time slot is being processed, the time slot having the lower priority will be stopped and the time slot having the higher priority will then be processed before the interrupted time slot can be further processed.

Lower-priority time slots are lined up in a queue and are not processed until all higher-priority time slots are finished.

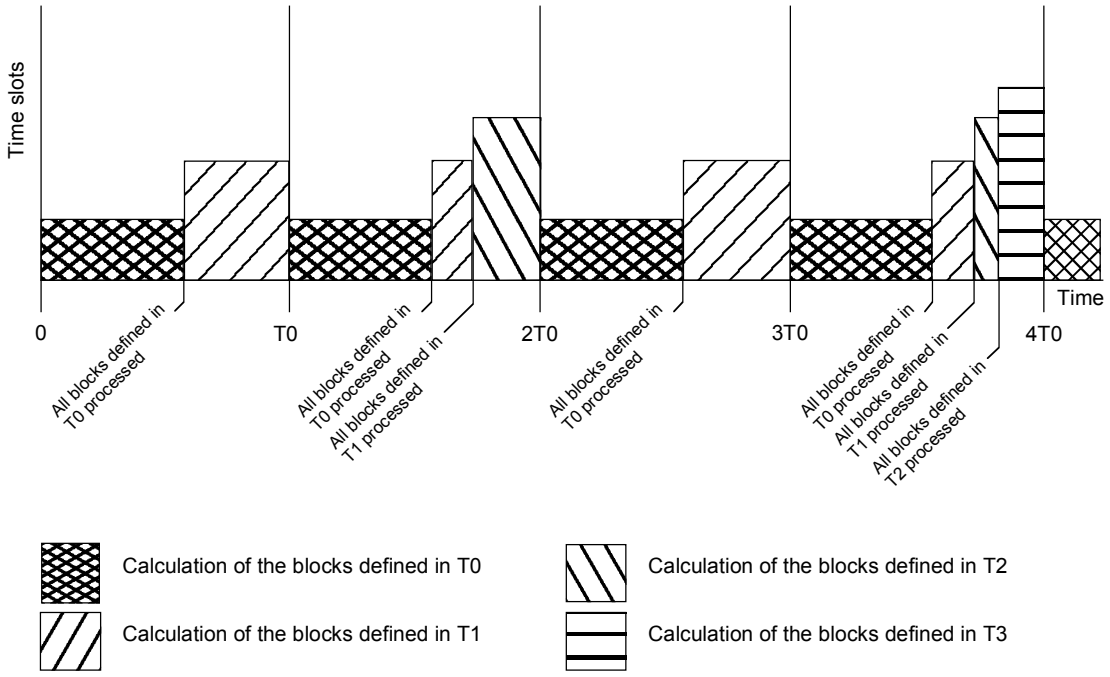

Fig. 7-1 Processing sequence of the time slots

7.1.1.3 Assignment of function blocks to time slots

To enable function blocks to carry out processing, a time slot (sampling time) is assigned to each function block. Assignment is effected by parameterizing in a table.

Some assignments are permanently stored in the firmware and cannot be changed. The two time slots T0 and T1 are reserved for time-critical function blocks. It is neither possible to remove function blocks from these time slots nor to assign further function blocks to these two time slots.

Time slot table

The time slot table consists of parameters U950 to U953. These parameters are indexed and have 100 indices each. Each index is assigned to precisely one function block. This means that the time slot in which the relevant function block is to be processed can be entered in the respective index.

The following applies regarding the assignment of the function block number to the parameter number with parameter index:

Parameter number	Parameter index	Assigned function block
U950	001 ... 098 099	1 ... 98 99
U951	001 ... 098 099	101 ... 198 199
U952	001 ... 098 099	201 ... 298 299
U953	001 ... 098 099	301 ... 398 399

Table 7-1 Time slots

The following assignment applies regarding the parameterization of time slots in parameters U950 to U953:

Time slot	Parameter value
T0	-
T1	-
T2	2
T3	3
T4	4
T5	5
T6	6
T7	7
T8	8
T9	9
T10	10
T20	20

Examples:

1. Function block 350 should be processed in time slot T4:
   U953.50 = 4
2. Function block 390 should be processed in time slot T9:
   U953.90 = 9
3. Function block 374 should not be processed:
   U953.74 = 20

DANGER

When the units are delivered, time slots are already assigned to the function blocks. You should adjust these to suit your requirements once you have determined the interconnection of the function blocks.

Please note that an incorrect processing sequence will lead to uncontrolled axis movements!

7.1.2 Processing sequence of the function blocks

The function blocks are processed sequentially. For this reason, it is necessary to determine the processing sequence. The definition is carried out by means of parameterization in a table.

The processing sequence for some functions blocks is permanently stored in the firmware and cannot be changed. This concerns the function blocks that are defined in the two time slots T0 and T1.

Processing table

The processing table consists of parameters U960 to U963. These parameters are indexed and have 100 indices each. Each index is assigned to precisely one function block. This enables a processing number to be entered in the respective index for the function block concerned. Processing of the function blocks is then carried out in ascending order.

The following applies regarding the assignment of the function block number to the parameter number with parameter index:

Parameter number	Parameter index	Assigned function block
U960	001 ... 098 099	1 ... 98 99
U961	001 ... 098 099	101 ... 198 199
U962	001 ... 098 099	201 ... 298 299
U963	001 ... 098 099	301 ... 398 399

Examples:

1. Function block 350 should be processed in time slot T4 before function block 390:
   U953.50 = 4
   U953.90 = 4
   U963.50 = 1000
   U963.90 = 1010
2. Function block 350 should be processed in time slot T9 after function block 390:
   U953.50 = 9
   U953.90 = 9
   U963.50 = 1050
   U963.90 = 1010

DANGER

When the units are delivered, a processing sequence has already been determined. You should adjust this to suit your requirements once you have determined the interconnection of the function blocks.

Please note that an incorrect processing sequence will lead to uncontrolled axis movements!

7.1.2.1 Time monitoring

Depending on the number and frequency of the blocks to be processed, the microprocessor system of the units has a varying degree of utilization. In order to avoid any dangerous overloading, the operating system has a time monitoring facility, which

- monitors the system for its overall workload
- monitors the various time slots to ensure they are being completely processed within the allocated time
- generates alarms and fault messages if calculating times are not adequate.

7.1.2.2 Influencing the time response

The time response affects two different areas:

- Calculation workload
- Control response

Calculation workload

You can influence the calculation workload as follows:

- By changing the pulse frequency P340. With a high pulse frequency, less calculating time is available per time slot. With a low pulse frequency, more calculating time is available per time slot.
- By assigning function blocks to different time slots.

If you assign too many function blocks to one time slot, it is no longer possible to process all function blocks within the specified time. The time monitoring facility generates an alarm and de-energizes the unit if the alarm occurs repeatedly.

Control response

You can influence the control response as follows:

- By changing the pulse frequency P340. With a high pulse frequency, the reaction time is shorter. With a low pulse frequency, the reaction time is longer.
- By assigning function blocks to other time slots.
- By changing the processing sequence.
- By changing time-relevant parameters.

If you assign a function block to a slow time slot (e.g.T10), the result of this function block is seldom re-calculated, i.e. the long processing time acts on the control circuit as a delay element. If you change the processing sequence of two consecutive function blocks by having one output block calculated before its associated input block, you will have integrated a delay element of the duration of one time slot into the control circuit.

Rules

You should observe the following rules regarding the assignment of function blocks to the time slot table and the processing table.

- Function blocks that can be combined to form a function group (with a mutual task) should be processed in the same time slot.
- Function blocks should be processed in the fastest necessary time slot, not in the fastest possible time slot.
- The sequence in which the function blocks are entered into the processing table should correspond to the signal flow.

7.2 Technology functions

DANGER

It is the user's responsibility to make allowance for the safety-relevant requirements when using the technology functions as free blocks and to interlock them.

7.2.1 Comfort ramp-function generator

Adaptation

- The adaptation function has no effect with ramp-up/ramp-down times in ‘min’ and ‘h’.
- The resolution is 11 bits = 0.2 %.
- The adaptation function only has an effect for ramp-up/ramp-down times, not for rounding off.
- With an adaptation factor of 0 %, the rounding time at least has an effect.

Rounding

- The rounding function has no effect with ramp-up/ramp-down times in ‘min’ and ‘h’.
- The rounding function also has an effect during zero passage.
- There is no overshooting over zero.
- The rounding function can be altered during ramp-up/ramp-down.
- Initial rounding is always limited to at least 10 % of the final rounding.

Calculating time

The following calculating times apply to the comfort ramp-function generator:

- Without rounding:
  65 to 79 µsec
- With initial rounding = final rounding:
  96 to 105 µsec
- With initial rounding <> final rounding:
  105 to 114 µsec
- With initial rounding <> final rounding and adaptation:
  123 to 132 µsec

Sampling time

The ratio of the sampling time to the ramp-up, ramp-down and rounding times is as follows:

- With 1 : 100, a very good result
- Example.: When Tsa : Tround. = 1 : 10, the ramp-up/ramp-down time can be false by a maximum of 10 %
- Max. sampling time: 200.00 msec

Priorities

The priorities of the commands of the comfort ramp-function generator are as follows:

1. Enable
2. Quick stop
3. Set
4. Ramp down to zero
5. Stop

RFG tracking

The ramp-function generator tracking (limiting) always has an effect, i.e. even if the RFG is blocked. The positive limiting value should always be greater than the negative limiting value, otherwise the limitation cannot be correctly calculated. If the positive limiting value is negative, the output is limited to this negative value even if the RFG has been blocked!

RFG bridging

Bridging of the ramp-function generator has the following effect:

- The output value y is equal to the input value x, irrespective of the commands ramp down and stop.
- In the case of quick stop, however, the quick-stop time has an effect.

7.2.2 Technology controller

Calculating time

The following calculating times apply to the technology controller:

- PI controller with Kp adaptation: 38 µsec
- PID controller with Kp adaptation and smoothing: 48 µsec
- With all (droop, precontrol, RFG at output): 58 µsec

Kp adaptation

Due to negative factor, a sign reversal is possible!

I component

- The I component is always set, irrespective of whether the controller is blocked or enabled.
- If the controller is blocked, the controller output is always zero, even when the I component is set
- When Tn = 0, the I component is deleted, the effect is equal to Tn = ∞
- Tracking of the I component only occurs when the output is limited (B555 = 1) and Tn <> 0 and the controller is enabled and the I component is not set.

Controller block

Blocking of the technology controller results in the following:

- The limiting ramp-function generators are reset
- The setpoint, actual value, smoothing and controller input are calculated
- The D component is calculated
- Droop and precontrol are added
- P component and controller output are zero
- No setting of the I component => I component is deleted
- The output limitation is calculated (with B+ = B- = 0)

Smoothing

- No sub-sampling, i.e. each value is used
- With a smoothing time of zero, the smoothing element is set to the input value
- Smoothing time : scan time < 500
  => max. 1 % error in smoothing time
- Smoothing time : scan time = 3000
  => max. 10 % error in smoothing time
- Smoothing time : scan time > 20000
  => should not be set

RFG output limitation

- Ramp time : scan time < 500
  => max. 1 % error in ramp time
- Ramp time: scan time = 1500
  => max. 10 % error in ramp time
- Ramp time: scan time > 10000
  => should not be set
- Always B- ≤ B+
- The upper limit (U370.1) always has higher priority than the lower limit (U370.2)

7.2.3 Basic positioning

Principle

The basic positioner can be used for "basic" positioning tasks. It is implemented using three free function blocks and provides the necessary operating modes and functionality to move an axis from A to B under position control.

As can be seen in the "overview" in function diagram 788a, the basic positioner consists of the three free function blocks that are completely pre-wired together in the factory setting for the "Basic positioner with motor encoder" function (these three blocks can also be used individually for further applications).

All that therefore has to be done is to modify the desired inputs in function diagram 788a (shown in more detail in function diagram 789a) and connect the outputs (see function diagrams 788a and 789c) as recommended (for motor encoder).

Enabling (ENABLE POS/ REF) is implemented in the factory setting using the "position controller enabled" checkback signal, i.e. best way to enable the basic positioner is by means of the user-selectable source "enable position controller" (P210, [340.4]).

Function diagram 788 also provides a graphical overview of the embedding.

As practically all the variables of the basic positioner (including those between the three free function blocks) are binector or connector inputs/outputs, the function can be controlled both using only one signal or with the desired sequence/interlocking.

Consequently, the desired function/movement must be ensured by the user.

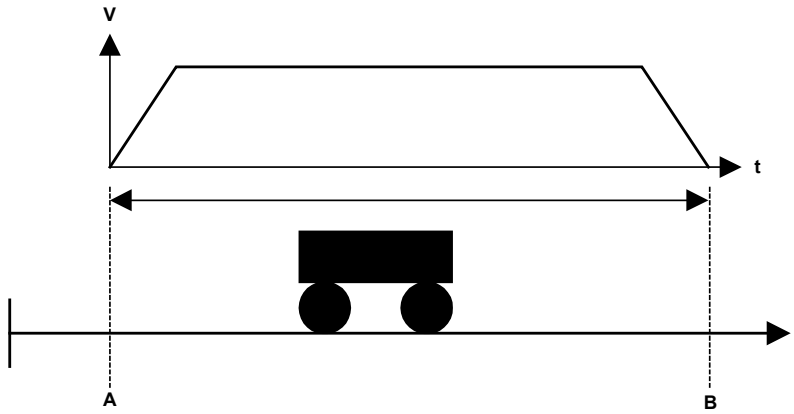

Fig. 7-2 Moving from A to B

NOTE

Standard applications are available including parameter assignment and documentation. These can be obtained from your regional SIEMENS AG office and are available from the Application Center for Production Machines.

Characteristics

What the basic positioner offers:

Positioning POS (absolute/relative) of linear and circular axes with motor encoder or machine encoder

- SETUP (stepless)
- Homing REF (homing movement/homing on the fly)
- Software limit switch SWE (for linear axis)
- Backlash compensation (with preferred position)
- Exact positioning window (POS_OK window + delay time)
- Window evaluation for post-homing
- Rate-of-change limitation (adaptable)
- Continuous or triggered setpoint transfer
- Mode change on the fly (REF, POS, SETUP)
- Setpoint change on the fly possible using PZD

Advantages of basic positioner:

- Cost neutral (with basic unit functionality)
- Easy to understand (basic commissioning)
- Continuous setpoint evaluation (during constant transfer)
- Control/checkback interface using BICO technology (e.g. PLC connection)
- Mode change on the fly (REF, POS, SETUP)
- Lower calculation time loading
- Lower project engineering costs
- Greater freedom for applications
- SIMATIC S7 not absolutely necessary

Differences from existing technology option F01:

- No automatic processing of blocks
- No automatic lag monitoring (this can be implemented using free blocks if required, see Section "Script files with project examples")
- No fixed error messages or warnings (these can be implemented using free blocks if required)
- No remaining traverse path in the case of relative positioning (in the sense of F01)

The basic positioner, referred to in the subsequent text as positioner or by the abbreviation BPos (in the parameters), is implemented using three free function blocks. The factory settings of these all match and the function blocks are already wired ready for operation with a motor encoder. The user simply has to make the connections to the basic unit (see function diagram 789c).

Overview of the three function blocks

Setpoint transfer and mode management [FD789a]

Setpoint transfer block with mode management and edge-controlled setpoint transfer for consistent data transfer.

Setup/positioning [FD789b]

Setup/positioning block that traverses a specified path relatively or absolutely using the specified deceleration, acceleration and speed.

Correction value/homing [FD789c]

Correction block that provides the position correction and position setpoints for linking to the position controller and also the position detection (see overview diagram FD788, FD788a for linking to the basic unit).

Recommendations

Function diagrams 788 to 789c are necessary for an understanding of these instructions.

For the standard user, it is sufficient to work with function diagram 788a and to use these instructions for reference if required.

NOTE

The control/checkback signals have **positive** logic (up to RESET SET setpoint).

Application

The basic positioner consists of the three free blocks and is available at no extra cost with the same functionality as the basic unit to provide a solution for **"basic" positioning applications**.
(In the factory setting, the three free blocks are **completely** pre-wired for the "basic positioner with motor encoder" application.)

The positioner leaves all options open to the user when designing a solution for a positioning task. Thus, the positioner can be expanded or modified by its own BICO interconnections from the blocks available in the unit.

DANGER

The user is responsible for taking account of and providing interlocks for the relevant safety requirements when implementing a positioning task using the basic positioner.

NOTE

The positioner only operates as a pure position controller. The positioner is enabled using B220 on U866.1 ENABLE_POS_REF (enable basic positioner).
It is expected that parameter assignment of the basic unit has already taken place before the commissioning of the positioner.

Process data traffic is not linked to predefined jobs (e.g. from an S7), but can be implemented using the PKW/PZD basic unit functions (see project examples).

Using the communication options of the basic unit (SIMOLINK, USS-BUS, PROFIBUS-DP, etc.), the position setpoint, maximum speed, acceleration and deceleration and the control word can be processed directly as setpoints and the actual values and statuses can be read back.

The **setup/positioning** block is a setpoint generator. The position and speed setpoints required for a positioning process are formed from the target position, the maximum speed and the maximum acceleration or deceleration.
These parameters are used to calculate the speed and position setpoints such that the target position is reached without violating the specified limits.
The setpoint generator can also be used as a pure ramp function generator and setpoint generator for a control process (setup) or as lead value source for synchronous tasks.

The **setpoint transfer block** carries out the setpoint transfer and interlocks the possible modes of homing, positioning and setup.
This also generates a homing movement that processes the core block as a ramp generator (SETUP) using reversing cams.

The **correction block/homing command** provides the setpoints with speed precontrol, the position correction signals and handles the measured value memory.

The blocks must always be configured so they have the shortest possible interrogation time (< 5 ms). If too slow an interrogation time is chosen, setpoint jumps or uneven running of the axis may occur.

Preferably, the interrogation time should be the same as that used for technology option F01 (interrogation time T4).

U953.60 = 4
U953.61 = 4
U953.62 = 4

7.2.3.1 Functions

Set setpoint transfer Setpoint transfer and mode management (function diagram 789a)

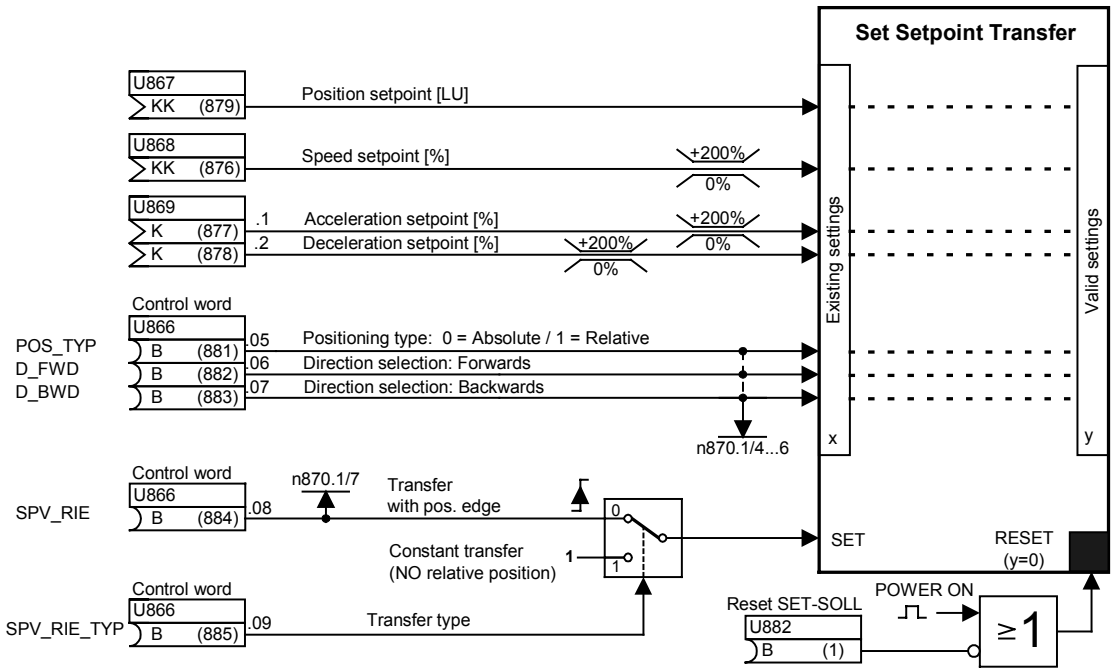

Fig. 7-3 Setpoint transfer input

The effective setpoints, such as position setpoint [LU], speed [%], acceleration [%] and deceleration [%], and the binary signals for type of positioning (absolute or relative) and for direction selection (forwards or backwards) all form part of the "set setpoint" transfer.

NOTE

The speed, acceleration and deceleration setpoints are percentage values that must always be positive (negative setpoints are limited to 0 %).

Set setpoint transfer with edge control [SPV_RIE_TYP] = 0

If edge-controlled transfer is selected, the active setpoint values are always valid at the same time as the rising edge on SPV_RIE from 0 1.
After transfer of the setting values, the SPV_RIE_ACKN transfer acknowledgement is set as checkback for the user. An acknowledgement-controlled setpoint transfer can be implemented with the checkback signal SPV_RIE_ACKN (see section "Acknowledge transfer").

Set/setpoint transfer with constant transfer [SPV_RIE_TYP] = 1

If constant setpoint transfer is selected, all the pending setting values are transferred immediately as valid values. A rising edge on SPV_RIE 0 1 no longer has any effect on this. The checkback signal SPV_RIE_ACKN has no function in this mode of setpoint transfer and therefore remains at logical zero.

NOTE

The following limitation applies to constant setpoint transfer:
The relative positioning type (POS_TYP = 1) is locked in the case of constant setpoint transfer (SPV_RIE_TYP = 1).
The valid speed setpoint is set to 0%.
Therefore, **no relative positioning** is possible with constant setpoint transfer.

Reason:
For a relative travel movement, the travel path is started as an incremental dimension with a rising edge on POS_ON. Therefore, only an edge-controlled transfer makes sense.

Acknowledge transfer [SPV_RIE_ACKN]

With edge-controlled transfer, the signal [SPV_RIE_ACKN] is set as checkback for the user after transfer of the setting values. If the control signals and setpoints are transferred from a higher-level system (e.g. PC, SIMATIC S7) in conjunction with the communication capabilities of the basic unit, the acknowledge transfer can be employed by the user to initiate the [SPV_RIE] signal under acknowledgement control.

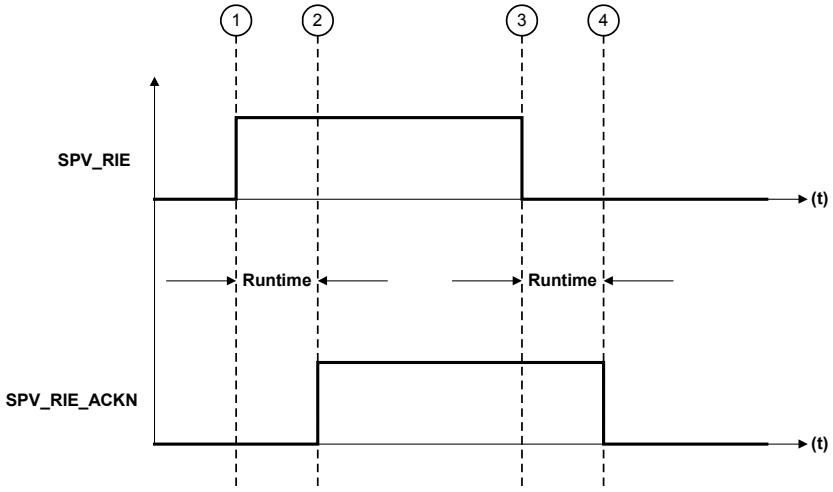

Fig. 7-4 Signal sequence of acknowledgement controlled setpoint transfer

Description:

① The block transfers the pending setting values from the user when a rising edge is detected on the SPV_RIE signal (from 0 to 1).

② Checkback signal SPV_RIE_ACKN = 1
Acknowledges the transfer of the setpoints from the positioner in the form of a checkback signal for the user

③ With control signal SPV_RIE = 0
acknowledge transfer is confirmed by the user

④ Checkback signal SPV_RIE_ACKN = 0
as conclusion of setpoint transfer

Reset set setpoint (U882)

This input is low active and is connected to logical 1 in the factory setting as an auxiliary input. All outputs of the basic positioner (i.e. binectors and connectors) of the set/setpoint transfer are set to zero with logical "0" (KK874, KK875, K872, K873, B874, B875, B876 = 0) as is the case after Power ON.

This gives the user the option to delete the valid outputs.

DANGER

An abrupt compensating movement of the axis may occur if the RESET signal is output without precautionary measures having been taken.

Mode management

The mode management and setpoint transfer block can be found on function diagram 789a and is assigned to a time slot by means of U953.60.

The mode management function block interlocks the homing, positioning and setup modes against each other. This interlocking ensures the priority of the modes.

Priorities:

REF_ON	homing	= highest priority
POS_ON	positioning	= second highest priority
SETUP_ON	setting up	= lowest priority

Transfer between the modes takes place on the fly. A mode change can be carried out without a drop in speed. The priorities are always taken into account, even if modes are selected simultaneously.

Example:

If all modes are selected simultaneously REF_ON = 1 with REF_TYP = 1, POS_ON = 1, SETUP_ON = 1, homing movement always has priority. If homing movement is deselected (REF_ON = 0 with REF_TYPE = 1), the positioning mode is effective.

NOTE

Homing on the fly (REF_TYPE = 0) is always effective with REF_ON and has no effect on the priority.

If positioning is also deselected, the setup mode immediately becomes active.

Mode management also safeguards the sequence control of the homing movement, i.e. homing movement with preferred direction evaluation and reversing cams.
This mode permits the positioning block to travel to and fro in SETUP = 1 using the reversing cams REF_BWD_STOP, REF_FWD_STOP until REF_STOP [ARFD] = 1 is achieved.

See "Homing movement" section for further information.

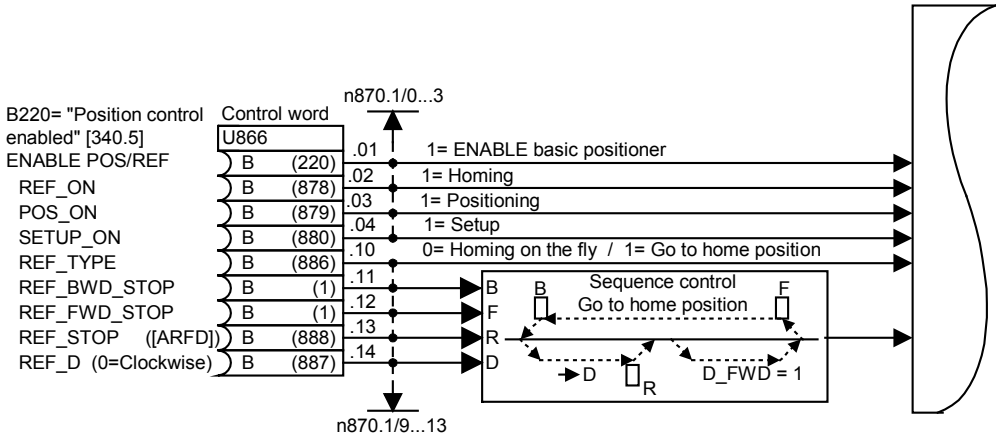

Fig. 7-5 Mode management input on control word U866

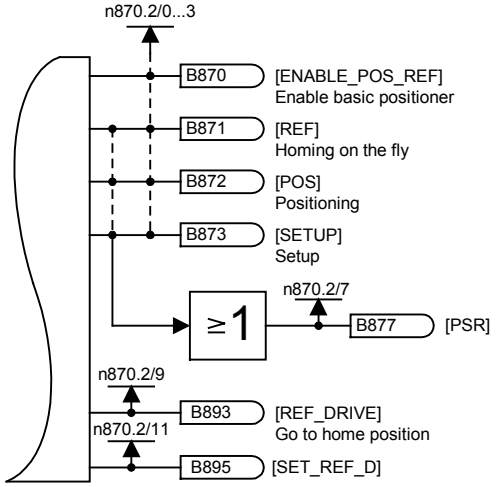

Fig. 7-6 Mode management outputs

The mode management outputs become the control signals for the position ramp function generator and the correction block.

Binector B870 ENABLE_POS_REF = 1 enables the series-connected function blocks (positioning block, correction block).

Binector B877 PSR (**P**OS/**S**ETUP/**R**EF) shows that one of the three modes POS, REF or SETUP is active.

Binector B893 REF_DRIVE = 1 shows that "homing movement" with reversing cams is active.

Binector B895 SET_REF_D = 1 shows the preferred direction REF_D (input Src U866.14).

Homing on the fly		**Input (control signals)**										**Output**
REF_TYP = 0		ENABLE	REF_ON	POS_ON	SETUP_ON	REF_TYP	REF_STOP	REF_D	D_FWD	D_BWD	POS_TYP	
ENABLE_POS_REF	B870	1	x	x	x	x	x	x	x	x	x	1
REF	B871	1	1	x	x	0	x	1	x	x	x	1
POS	B872	1	x	1	x	0	x	x	x	x	x	1
SETUP	B873	1	x	0	1	0	x	x	0	1	x	1
D_FWD_ACT	B875	1	x	0	1	0	x	1	1	0	x	1
D_BWD_ACT	B876	1	x	1	0	0	x	0	0	1	x	1
PSR	B877	1	1	1	1	x	x	x	x	x	x	1
REF_DRIVE	B893	1	x	x	x	0	x	x	x	x	x	0
POS_TYP_ACT	B874	1	0	1	x	0	x	x	x	x	0	0
		1	0	1	x	0	x	x	x	x	1	1(V=0)
SET_REF_D	B895	x	x	x	x	x	x	1	x	x	x	1
Homing												
REF_TYP = 1												
ENABLE_POS_REF	B870	1	x	x	x	x	x	x	x	x	x	1
REF	B871	1	1	x	x	1	0	1	x	x	x	1
POS	B872	1	1	x	x	1	x	x	x	x	x	0
SETUP	B873	1	1	x	x	1	0	x	0	1	x	1
D_FWD_ACT	B875	1	1	x	x	1	0	1	1	0	x	1
D_BWD_ACT	B876	1	1	x	x	1	0	0	0	1	x	1
PSR	B877	1	1	x	x	x	0	x	x	x	x	1
REF_DRIVE	B893	1	1	x	x	1	0	x	(1)*)	(1)*)	x	1
POS_TYP_ACT	B874	1	0	1	x	1	x	x	x	x	0	0
		1	0	1	x	1	x	x	x	x	1	1(V=0)
SET_REF_D	B895	x	x	x	x	x	x	1	x	x	x	1

x= don't care

*) Depending on selection of direction D_FWD_ACT / D_BWD_ACT

Table 7-2 Mode truth table

Status signals n870 Status signals of monitoring parameter n870

n870 Index 1: setpoint/mode input (-> K886)

Bit 0	U866.1	ENABLE_POS/REF	Enable basic positioner
Bit 1	U866.2	REF_ON	Homing on
Bit 2	U866.3	POS_ON	Positioning on
Bit 3	U866.4	SETUP_ON	Setup on
Bit 4	U866.5	POS_TYP	Positioning mode
Bit 5	U866.6	D_FWD	Positive direction
Bit 6	U866.7	D_BWD	Negative direction
Bit 7	U866.8	SPV_RIE	Transfer with positive edge
Bit 8	U866.9	SPV_RIE_TYP	Transfer type
Bit 9	U866.10	REF_TYP	Transfer type
Bit 10	U866.11	REF_BWD_STOP	Positive direction reversing cam
Bit 11	U866.12	REF_FWD_STOP	Negative direction reversing cam
Bit 12	U866.13	REF_STOP	Terminate homing
Bit 13	U866.14	REF_D	Homing approach direction

Table 7-3 BPos STW status of monitoring parameter n870.1: setpoint/mode input

The BPos STW status input is the same as connector 886.

n870 Index 2: setpoint/mode output (->K887)

Bit 0	B870	ENABLE_POS_REF	Enable basic positioner
Bit 1	B871	REF	Homing on the fly
Bit 2	B872	POS	Positioning
Bit 3	B873	SETUP	Setting up
Bit 4	B874	POS_TYPE_ACT	Valid positioning type
Bit 5	B875	D_FWD_ACT	Valid positive direction
Bit 6	B876	D_BWD_ACT	Valid negative direction
Bit 7	B877	PSR	POS or SETUP or REF active
Bit 8		----------	
Bit 9	B893	REF_DRIVE	Homing active
Bit 10	B894	SPV_RIE_ACKN	Transfer acknowledge
Bit 11	B895	SET_REF_D	Homing approach direction

Table 7-4 BPos STW status of monitoring parameter n870.2: setpoint/mode output

The BPos STW status output is the same as connector 887.

Special case when selecting direction D_FWD and D_BWD

Case 1: A rotary axis (U858.1 <> 0) is positioned absolutely (POS_TYP = 0).

In this case, in addition to the mode, the direction of movement must be determined through the two control binector inputs D_FWD or D_BWD:

[D_FWD]	[D_BWD]	
0	0	= shortest path
1	0	= always positive direction
0	1	= always negative direction
1	1	= no selection of direction of movement (or: axis is stopped on ramp)

Case 2: The homing mode is selected with a circular or linear axis.

In this case, in addition to the mode, the direction of movement must be determined through the two control binector inputs D_FWD or D_BWD:

[D_FWD]	[D_BWD]	
0	0	= no selection of direction of movement (or: axis is stopped on ramp)
1	0	= positive direction
0	1	= negative direction
1	1	= no selection of direction of movement (or: axis is stopped on ramp)

Case 3: A linear axis (U858.1 <> 0) is positioned absolutely (POS_TYP = 0) or relatively (POS_TYP = 1).

In the case of relative positioning, the sign of the position setpoint determines the direction of movement. With absolute positioning, the direction of movement is determined by the difference between the position setpoint and actual values. Activation of the control binector inputs D_FWD or D_BWD has **no** effect.

7.2.3.2 Normalization

The purpose of normalization is to establish the relationship between the mechanical (e.g. mm) and electronic (LU) representation.

In positioning, the path dimension unit is called a **L**ENGTH **U**NIT LU. This means that LU can be mm, inches, degrees, etc.

LU = **L**ENGTH **U**NIT is a neutral length dimension.

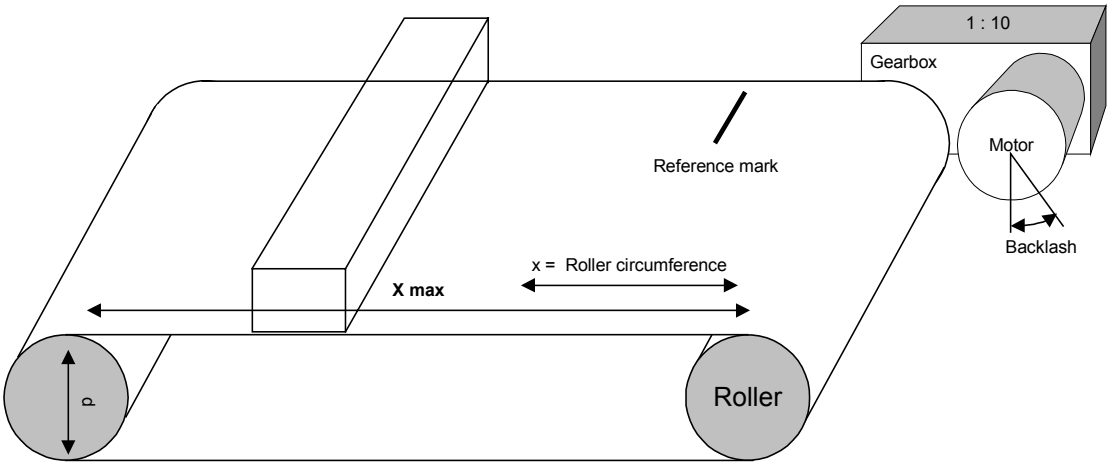

Fig. 7-7 Typical positioning application

The arrangement shown in Fig. 7-7.

NOTE

The factory setting values are pure motor-related normalizations.

Example:
Encoder: 131 072 pulses per motor revolution [resolution in 2^n (n = 17)]
with a gearbox having 1:10.00 ratio (i), this gearbox factor must be included in the calculation.

131072 x 10 = 1 310 720 pulses per roller revolution

The diameter of the drive roller (d) is 300.000 mm

$$x = d \times \pi = 300 \text{ mm} \times 3.1415 = 942.477 \text{ mm}$$

The following is to be represented: **1LU = 1 µm**

The circumference of the roller (x) is therefore 942477 LU.

Actual-value weighting factor

AVWF = actual-value weighting factor as conversion constant/factor.

For example, if 1 LU = 1 µm, a decimal setpoint of 1000 LU represents a travel distance of 1000 µm, or 1 mm.

Without the AVWF factor, the length information always refers to the encoder pulses depending on the resolution of parameter P171 (motor encoder) 2^{P171}.

e.g. P171 = 12 4096 LU/revolution

The AVWF is calculated from this as follows:

$$\text{AVWF} = \frac{\text{Path distance per motor revolution}}{\text{LU per motor revolution}} \quad \text{or}$$

$$\text{AVWF} = \frac{\text{Roller circumference}}{\text{LU per motor revolution} \times \text{gearbox factor (i)}}$$

The aim should be to have a resolution of about 1 µm / encoder increment. Table 7-5 shows how large the factors are and hence how high a resolution is to be selected.

In the example, the AVWF factors result from a roller diameter of 300.00 mm (circumference = 942477 µm). This must then be multiplied by the gearbox factor (AVWF*).

P171	Resolution	AVWF	AVWF*
12	4096	230.096924	23.0096924
13	8192	115.048462	11.5048462
14	16384	57.524231	5.7524231
15	32768	28.7621155	2.87621155
16	65536	14.3810577	1.43810577
17	131072	7.19052887	**0.719052887**
18	262144	3.59526443	0.359526443
19	524288	1.79763222	0.179763222
20	1048576	0.89881611	0.089881611
21	2097152	0.44940805	0.044940805

Table 7-5 AVWF factors resulting from a roller diameter of 942477 µm

This results in an AVWF factor (which should be less than 1) of **0.71905288** or, as a fraction

$$\frac{\text{Numerator}}{\text{Denominator}} = \frac{942477}{1310720} = 0.71905288$$

as gearbox factor or factor for the AVWF.

More encoder increments per revolution should therefore be specified (P171) than there are LUs per revolution.

NOTE

The AVWF, which is entered in P169 for the figured before the decimal point and in P170 for the figures after the decimal point, can be entered as a decimal with a maximum of 8 figures. Alternatively, the AVWF parameters can be entered as a gearbox factor (fraction) numerator/denominator, P180.1, P180.2 of the motor encoder.

Rated speed (U856)

The rated speed is a reference value used to represent speed.

The AVWF is also used to calculate the rated speed U656 which, in the factory setting, is 12288.00 [1000 LU/Min]. If this value is changed, the basic unit parameter P205 (rated V) must also be set to the same value, ignoring the figures after the decimal point.

Rated V = resolution x AVWF **factor x reference speed x 10^{-3}**

The rated V is specified in 1000 LU/min and the reference speed in rpm.

In the factory setting, the resolution of $2^{12} = 4096$ increments/revolution, an AVWF = 1.0 and 3000 rpm results in a rated speed of 12 288 000 LU/min. This speed then corresponds to 100% in the equipment.

In the example, the rated V derived from:

131 072 [LU/rev.], an AVWF of **0.71905288 [**AVWF**]** and 3000 rpm rated motor speed results in a rated speed of 282743097 [LU/min].

U856 = rated V = 2^{17} x 0.71905288 [IBF] x 3000 [rpm] x 10^{-3}
= **282743.096** in 1000 LU/min

The value is entered in 1000 LU/min with 2 decimal places
= 282743.09 in 1000 LU/min

Rated acceleration (U857)

The acceleration represents the change of speed (LU/min) within a time unit.
The rated acceleration is defined as the rate at which the drive accelerates from v = 0 to the rated speed (rated V) in t = 1 sec.
The following equation is used to calculate this:

Rated acceleration = U857 (in 1000 LU/s^2)
Rated speed = U856 (in 1000 LU/min)

$$(\text{U857})\,\text{rated acceleration} = \frac{\text{ratedspeed}\,(\text{U856})}{60 \times \text{t}}$$

Example (referred to factory setting):

Rated V = 12288.00 [1000 LU/Min],

results in the following with a desired runup time of 1 second from 0 100 %

$$\text{U857} = \frac{12288.00\,[1000\ \text{LU}/\text{Min}]}{60 \times 1} = 204.00\,[1000\ \text{LU}/\text{s}^2]$$

the value calculated for the rated acceleration is transferred to parameter U857. It is used to normalize the acceleration setpoint (U852.1) and the deceleration setpoint (U852.2), which are specified in percent.

7.2.3.3 Operating modes

Setup mode (SETUP_ON)

In setup mode, the functionality of the setup/positioning block becomes available. This function block can be found in function diagram 789b and is assigned to a time slot using parameter U953.61.

Setup means position-controlled jogging.

In setup mode (SETUP_ON or SETUP = 1), the axis is moved under position control by means of the direction selection [D_FWD] and [D_BWD] taking into account the set values for acceleration and deceleration and the speed.

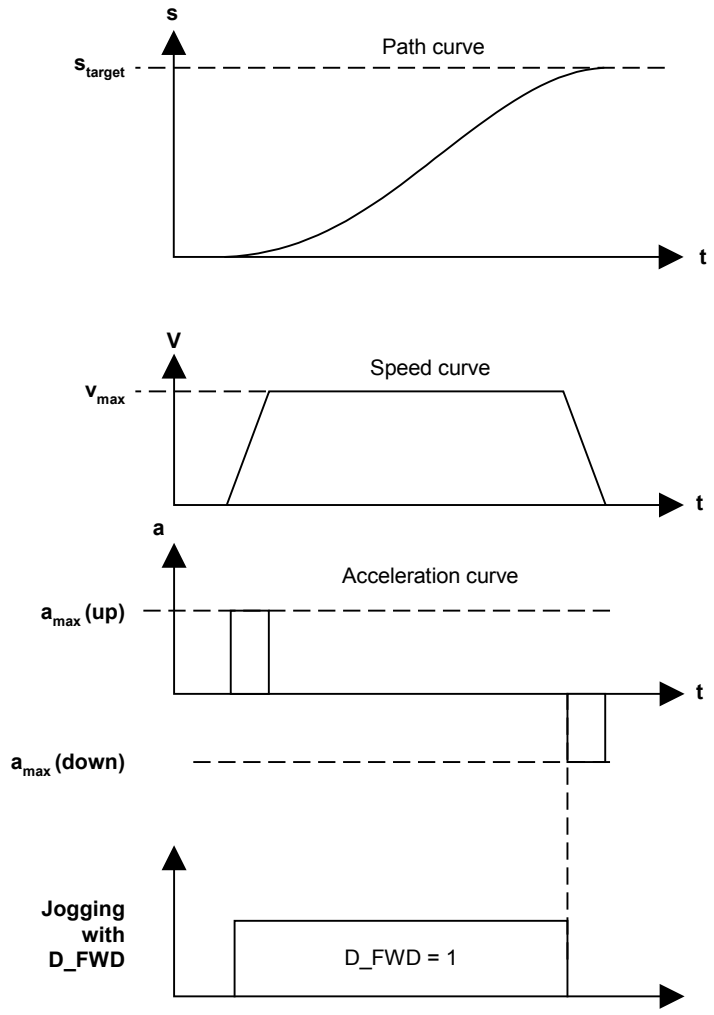

Fig. 7-8 Setup process SETUP = 1 and D_FWD = 11

To activate the setup mode, the enable positioner/homing command ENABLE_POS_REF must be set. Because of the order of priority, neither positioning (POS_ON) nor homing movement (REF_TYP = HIGH) may be set.

In the setup mode with linear axis, the software limit switches become effective after homing.

The cycle length of a rotary axis is entered in the parameter U858 (axis cycle) in LU. U858 should be set to 0 in the case of a linear axis. The value (–1) in index 2 means that the value for index 2 = corresponds to the value in index 1.

Homing mode (REF_ON)

The correction and homing block always provides the functionality. The associated function block can be found in function diagram 789c and is assigned to a time slot using parameter U953.62.

The homing mode is employed when incremental path encoders are used, as there is no relationship between the measuring system (incremental path encoder) and the mechanical position of the axis when the drive is switched on.

In this mode, a basic distinction is made between two types of homing. The type of homing depends on the selected homing type REF_TYP, which is set using parameter U875.10 or source U866.9.

The following settings are possible:

- REF_TYP = 0: Homing on the fly (post-homing)
- REF_TYP = 1: Homing movement in preferred direction and sequence control with reversing cams.

Homing on the fly REF_TYP = 0

Homing on the fly means setting the position setpoint and actual value simultaneously. This is implemented in the basic unit by position correction of the position detection and of the position setpoint of the position controller.
A reference position REF_setpoint is specified for this in U874.2. Alternatively, this reference position can be transferred via the connector to parameter U877.3.

From V1.6

The correction of position setpoint and position actual-value is always performed irrespective of the direction of rotation, unless (from V1.6) the direct setting of REF_D_REF is activated at the correction block (function diagram 789c) with REF_D_REF_EN = 1.
Signal SET_REF_D (B895) always shows the status of REF_D (input Src U866.14 preferred direction). This is linked with the input REF_D_REF at U878.5 (factory setting), which also enables the direction to be evaluated during homing on the fly (function diagram 789c).

If the current direction of rotation corresponds to [SET_REF_D] (B895), (1 = counter-clockwise / 0 = clockwise) and a valid measured value is received, a correction is carried out by means of "Start Ref." taking the "skip window" into account.

Homing movement REF_TYP = 1

Homing movement is initiated by a rising edge on REF_ON with homing movement selected by REF_TYP = 1 and the selection of a preferred direction using D_FWD or D_BWD. If the homing movement is terminated with REF_STOP and REF_ON is then removed, the active modes then take effect in their order of priority. REF_TYP is no longer taken into account. Homing movement is only initiated again with a rising edge on REF_ON.

Homing movement is initiated by a rising edge on REF_ON and the preferred direction selected using D_FWD or D_BWD. The reversing cams REF_STOP_FWD and REF_STOP_BWD reverse the movement until the homing signal [ARFD] on the input REF_STOP (U866.13) terminates the movement or the homing enable is removed.
For example, the homing signal is transmitted from a proximity switch to the interrupt-enabled digital inputs 4 or 5, thus saving the actual position at the moment the interrupt occurred in the motor encoder position measurement memory (function diagram 330). The source position measurement memory enable must be connected (P179 = 891) to the BPos measurement memory enable (function diagram 789c). The position measurement memory enable B891 is controlled by the BPos.

The outputs from the position measurement memory pass to the correction block/homing of the BPos (function diagram 789c).

Actual position at interrupt	U877.4 = 122	(position measurement memory)
Start referencing	U878.3 = 212	(measurement valid)

No correction is performed if the deviation between the reference position U877.3 and the actual position is less than the innermost window F1 (U879.1). If the deviation is between F1 and F2 (U879.2), the position setpoint and actual values are corrected by the deviation. If the deviation is greater than F2, B892 is set (print mark outside window 2).

In the factory setting, binector B888 (axis referenced) is connected to the control signal REF_STOP (U866.13, function diagram 789a). If the input REF_STOP is set, the homing movement is stopped.
The axis then stops on the ramp, which means that it has not reached the homing position but was stopped ahead of or behind it, depending on the direction in which it was moving. If required, POS_ON can be used to carry out an absolute movement (POS_TYP = 1) to this homing point.

The binector input REF_FWD_STOP restricts the homing movement in the FWD direction and reverses the direction that was previously selected using D_FWD and Ref ON (or that is indicated on REF_STOP_BWD after the reversal).

The REF_D signal specifies the direction in which a "coarse pulse" is to be evaluated. This means that the evaluation of the "coarse pulse" on the measurement memory (position detection) in the opposite direction with respect to [REF_D] will be ignored and that the measurement memory will not be enabled by the BPos until the homing direction corresponds to that indicated by [REF_D].

Sequence of homing movement D_FWD = 1

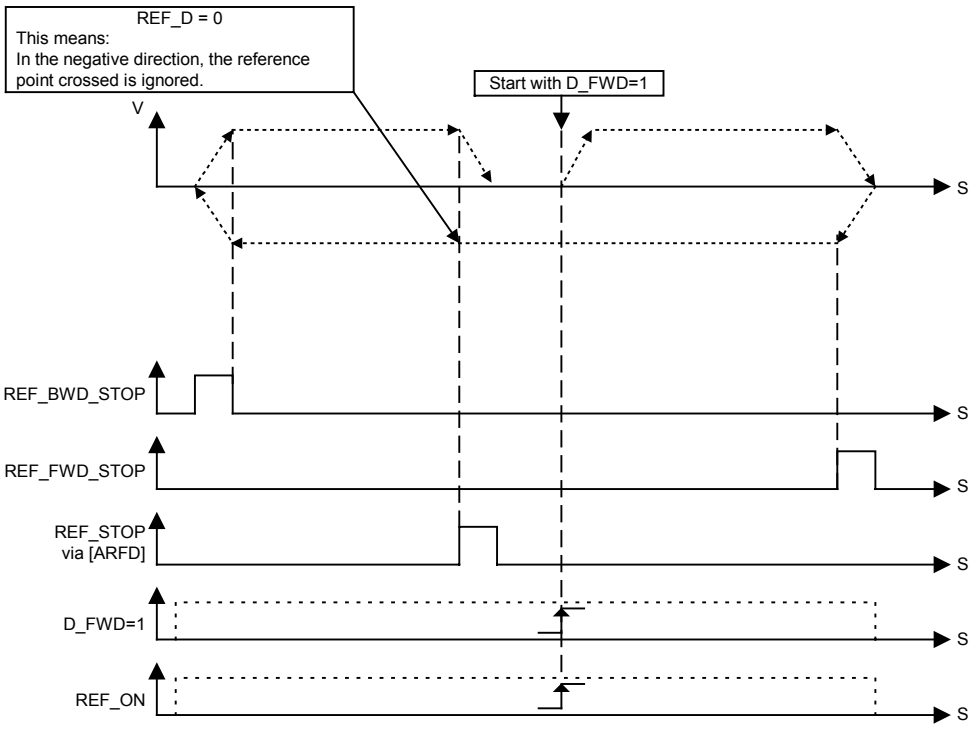

Fig. 7-9 Example of homing movement sequence start D_FWD to the right from the Proximity switch and homing direction REF_D = 0 (positive)

The setting values for acceleration and deceleration/delay are maintained during all movements. In the case of a constant transfer (U875.8 SPV_RIE_TYP = 1) these values can be changed with each rising edge on U875.7 SPV_RIE, even during the homing movement.

If the axis is in the homing mode [ARFD] = HIGH, this process can be repeated as often as required (note: 1 sampling time delay!). No user intervention is necessary as REF_STOP (and consequently ARFD) are reset to zero with the rising edge on REF_ON.

Homing movement with coarse pulse and zero pulse evaluation

This can be implemented if required by means of the basic unit functionality (see position detection, function diagram 330) in the speed controller.

Positioning mode (POS_ON)

The setup/positioning block provides the positioning functionality. This function block can be found in function diagram 789b and, as for setup, is assigned to a time slot using parameter U953.61.

The positioner is a position controller whose position difference (ΔS[LU]), which is derived from the setpoint position and actual position, is reduced to "0" using the specified acceleration and deceleration and maximum speed values.

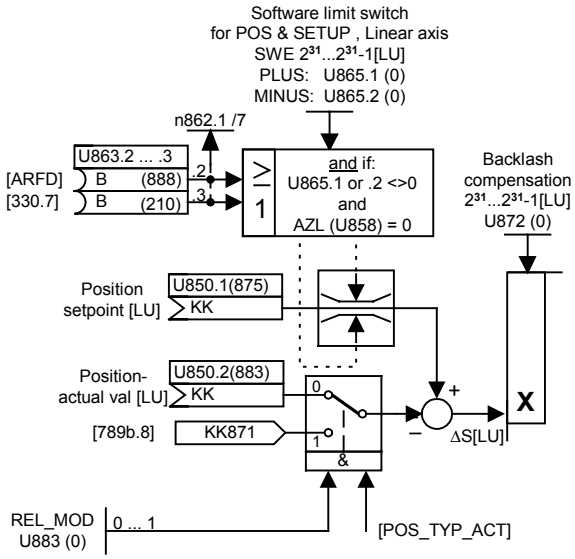

Fig. 7-10 Position controller: derivation of ΔS position difference

The positioner can be operated both in the block configuration described here or as a stand-alone function. The block then behaves as with constant transfer from the set setpoint module in function diagram 789a. The triggered variant is implemented by the upstream connection of the set setpoint block.

Changes to the setpoint are effective immediately.

The positioner consists of a position controller that controls the position difference ΔS to ΔS = 0 while maintaining the specified acceleration and deceleration and the speed setpoint. In doing this, the position controller operates correctly according to established control technology principles.
Possible overrunning of the target position is not prevented, as the compensation movements are carried out within the limits of the specified setpoints (acceleration/deceleration).

Example: If a target position is not reached within the set ramp, braking takes place on the ramp and the axis travels to the target position in the opposite direction.

DANGER

Behavior in accordance with correct control principles also means possible overrunning of the specified target position (oscillation).

DANGER

In the case of constant transfer SPV_RIE_TYP = 1 (or with stand-alone operation of the function block) and active POS or SETUP with D_FWD_ACT or D_BWD_ACT, a movement is initiated when the controller is enabled.

There is **no** START enable or read-in enable; setpoints are evaluated immediately.

Software limit switches

The software limit switches are only active in the case of a linear axis.

Reason: The image of a rotary axis only represents part of the range of movement over several axis cycles; there is therefore no point in having a limit within the axis cycle.

Recommendations:

If, for instance, a rotary table is to have a limited range of movement, it can have parameters assigned as for a linear axis.

To activate the software limit switches, parameter value U865.1 must be <> 0 or U865.2 must be <> 0

The software limit switches have the effect of limiting the range of movement of the setpoints and take into account any possible backlash compensation (end position ± backlash) that may be set.

The software limit switches only affect a referenced ("homed") linear axis.
The checkbacks for this are already predetermined in the factory settings of parameters U863.2 and U863.3.
The sources are ARFD (function diagram 789c.7, B888) from the homing using the basic positioner or "acknowledgement reference point detected" (function diagram 330.7, B210) from the reference point detection function in the basic unit in n control mode (see basic unit description - position detection).

If a software limit switch is approached, it is only possible to move away from it in the opposite direction. This is possible by specifying a new target position outside the limits of the software limit switches or by jogging in SETUP mode in the opposite direction to the software end limit.

NOTE

The effect of the software limit switches can be deactivated or reconfigured by the user (using BICO technology).

Example:

SWE_MINUS: 1000 LU

SWE_PLUS: 150000 LU

Permissible range of movement from 1000 to 150000 [LU]

Reversal backlash compensation (U872)

To activate reversal backlash compensation, parameter U872 must be <> 0.
Reversal backlash compensation is used to compensate for mechanical reversal backlash. In the case of an indirect measuring system (path encoder on motor), the mechanical backlash is first traveled before the effective (real) axis movement begins. The result is position errors. There is no minimum travel distance.

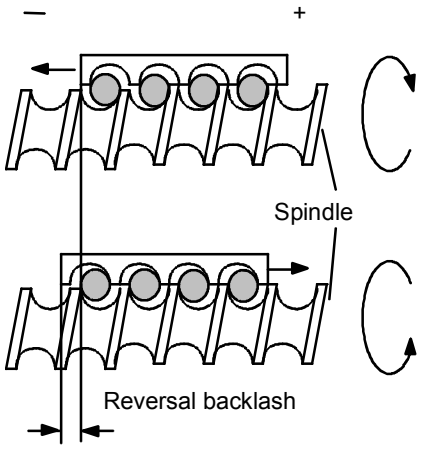

The sign gives the preferred position for the reversal backlash compensation.

This means:
Positive value = positive preferred position on the first positive movement after switching on the converter, no reverse backlash is taken into account.

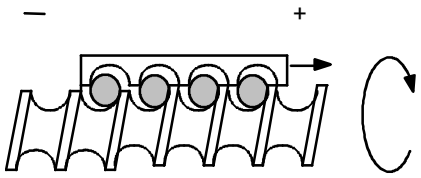

Negative value = negative preferred position on the first negative movement after switching on the converter, no reverse backlash is taken into account.

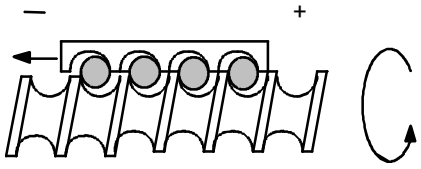

Parameter value = 0:
No reversal backlash compensation takes place.

The backlash compensation is taken into account in the software limit switches as follows:
If movement takes place over the software limit switch in the direction of the backlash, the axis stops at the software limit switch plus backlash.
This means that the unit itself is at the software limit switch but the position setpoint is beyond it.

Example:

Negative position (preferred position neg.)		**Positive position** (preferred position plus)
Software limit switch plus:	100000 LU	100000 LU
Software limit switch minus:	50000 LU	50000 LU
Backlash:	-100 LU	200 LU
Specified setpoint:	150000 LU	150000 LU
Output setpoint:	100100 LU	100000 LU
Actual-value:	100100 LU	100000 LU
Specified setpoint:	0 LU	0 LU
Output setpoint:	50000 LU	49800 LU
Actual-value:	50000 LU	49800 LU

Absolute positioning

In the case of absolute positioning, absolute equality is created between the position setpoint and the actual position value.

Setpoint = actual value

The POS input enables the positioner and movement takes place to the specified setpoint using the positioning movement. A new target position can be set at any time by changing the position setpoint.

If the POS input is reset during absolute positioning, movement is stopped immediately while maintaining the specified acceleration and deceleration and the specified speed setpoint. If the POS input is set again, the setpoint becomes valid again and the position setpoint is approached again.

With linear axis

In the case of a linear axis, a position setpoint in the range -2^{31} to $+2^{31}-1$ is possible, i.e. the range can be used to its full extent.

The software limit switches can be used with a linear axis.

In general, the use of a linear axis makes sense for limited movement paths. Nevertheless, it must be ensured that the path representation fits into the range.

Example:

A path is to have a resolution of 1/1000 mm = 1 µm:
4294.967297 could be represented with a 32 bit position setpoint of -2^{31} = -2147483648 [LU] to $+2^{31}-1$ = 2147483647 [LU].

Because of the resolution in 2^n steps and the mechanical coupling, a actual-value weighting factor (AVWF) usually results that allows the position setpoint to be converted to mechanical µm or [LU].

With rotary axis

In the case of a rotary axis (U858.1 <> 0), we speak of an axis cycle. The axis cycle can lie in the counting range from
0 to $+2^{31}-1$ = 2147483647 [LU]

Also in the case of a rotary axis, absolute equality is created between the setpoint position and actual position value within an axis cycle.

This means that the target position only lies within the axis cycle.

The movement is specified by the direction: shortest path, only positive or only negative.
See: evaluation of direction selection D_FWD / D_BWD

The setpoint is calculated and corrected (MODULO) within the axis cycle for both negative and positive setpoints.

Example:

-5000 becomes 3192 with AZL = 4096 (5000 MOD 4096)

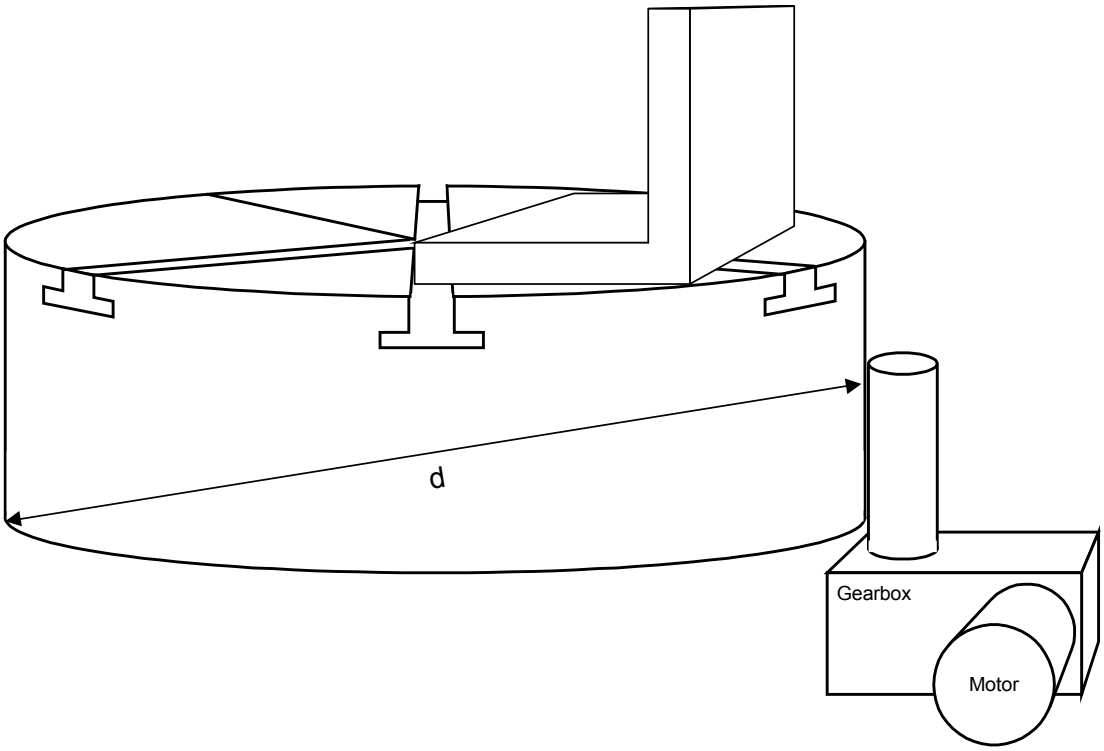

Fig. 7-11 Example of rotary axis, the rotary table

Relative positioning

In the case of relative positioning, also known as incremental travel, movement takes place over a specified distance. This movement is initiated by a positive edge on POS_ON (enable positioning) or transfer with positive edge in transfer type SPV_RIE_TYP = 0.

Re-triggering of this movement is possible at any time. In this case, the remaining distance is disregarded and a new relative distance is traveled from the time of triggering.

Example: Actual value = 12567
Setpoint = 5000
New target position: 12567 + 5000 = 17567

Setting the homing on the fly changes the actual value. As a result, the target position reached depends on the displacement of the measuring system caused by homing on the fly. This can, however, be selected to be dependent on the RELMOD mode (U883) (see next section).

The software limit switches refer to the sum of the distance (actual value) and interrupt relative positioning when the software limit switch is reached. Further movement can only take place in the direction opposite to that in which the software limit switch was approached.

NOTE

The relative movement is interrupted if the POS-ON is removed before the target position is reached or a positive edge in given on SPV_RIE. In this case, the remaining distance is deleted.

Recommendations:

if a relative movement is to be interrupted, i.e. without again travelling the total relative distance, the speed setpoint on U851 can be set to 0% by an analog switch. Stopping then takes place on the ramp. When switched again to a valid setpoint, the axis travels to the old setpoint position, i.e. the remaining distance will then be traveled.

Relative positioning mode

RELMOD = 0 (U883=0)

For relative positioning (POS_TYP_ACT = 1), the actual value from the position value content of source U850.2 is used, as in all other modes.

This means that, when homing on the fly, the corrected setpoint is taken into the travel distance calculation (SET = ACT).

NOTE

The positioner behaves in accordance with correct control principles. In the case of a rotary axis, the correction is carried out by the shortest path. This may mean that a reversal of direction is possible, especially if the correction value > 1/2 x axis cycle.

RELMOD = 1 (U883=1)

In the case of relative positioning (POS_TYP_ACT=1), the internal position value S_pos (KK871) is used.
This means that, when homing on the fly, the corrected setpoint is not taken into the travel distance calculation (SET <> ACT).

NOTE

In some circumstances, the software limit switches no longer refer to the actual value of the measuring system, as the internal position value is used.

The travel distance is not corrected, the distance that is specified is traveled.

With linear axis

In the case of relative positioning with a linear axis, the valid position setpoint is traveled as the distance.

The movement is only limited to the range (from -2^{31} to $+2^{31}-1$).

The software limit switches can be used with a linear axis.

With rotary axis

In the case of relative positioning with a rotary axis, the valid position setpoint is traveled as the distance.

The movement is otherwise limited to the range (from -2^{31} to $+2^{31}-1$).

The software limit switches cannot be used with a rotary axis.

Auxiliary inputs:

The purpose of the auxiliary inputs is to set the positioner output and to implement tracking mode.

Setting value

As standard, the setting value is the actual position value (KK120 motor encoder) to enable the actual position value to track to the position setpoint (jump suppression).

Position setting value

The position setting value can also be from another source (motor encoder/machine encoder) depending on the application.

Set trigger

With [ENABLE_POS], output KK871 tracks the position setting value source U850.3 (statically) and all statuses are reset.

ENABLE_POS

With [ENABLE_POS], output KK871 tracks the position setting value source U850.3 (statically) and all statuses are reset.

ENABLE_REF

With [ENABLE_REF], output KK882 tracks the position setting value source U877.2 (statically) and is corrected in the axis cycle. This implements the rotary axis representation of the actual position value in tracking mode.

Position of current actual value

Here, the actual value of the POS-OK representation is read; the actual position value can come from the motor encoder or machine encoder, but can also be from any other source.

The purpose of these auxiliary inputs is to delay the POS_OK signal output and to influence it if necessary.

Window width Pos OK

For the POS_OK representation, a window width (exact positioning window) in LU is invoked. The POS_OK checkback is set when the target position is reached.

POS_OK delay time POS_OK forms the delay time from the time parameter 0 to 100.00 s after reaching the target position in the window. A target position is expected after a time of 0 to 100.00 s to be certain that the position is held.

External position OK To influence POS OK externally or to ensure a handshake with another unit or to hide the checkback, the signal is evaluated in parallel.

Setpoint mode output:

B871: REF homing If the control binector "homing ON" [REF_ON] is active and travel takes place in the selected direction REF_D, REF is set to HIGH to enable the homing function on function diagram 789c.

Note: This signal is independent of status U866.1 ENABLE_POS/REF so that, when the positioner is enabled again through status U866.1 ENABLE_POS/REF, status ARFD = 1 is not reset.

(See the "Mode management" section.)

B872: POS positioning If the block is enabled (ENABLE_POS/REF = 1) and the "positioning ON" binector [POS_ON] is active and if no homing movement (REF_DRIVE = 1) is valid, status binector POS = 1 is shown.
(See the "Mode management" section.)

B873: SETUP If the block is enabled (ENABLE_POS/REF = 1) and the "setup ON" binector [SETUP_ON] is active and if no positioning or homing movement (REF_DRIVE = 1) is active ([POS_ON] and [REF_ON] = LOW), status binector [SETUP] = 1 is shown.
(See the "Mode management" section.)

B877: PSR positioning/homing/ setup active If the "positioning" status binector [POS] **or** the "homing" status binector [REF] **or** the "setup" status binector [SETUP] is active, this is shown through the status binector [PSR] = HIGH.

B893: REF_DRIVE homing movement active If the block is enabled (ENABLE_POS/REF = 1 and REF_TYP = 1 and REF_ON =1), REF_DRIVE is set to 1.

B895: SET_REF_D preferred direction SET_REF_D (B895) = REF_D (source U866.14), irrespective of all operating modes.

B874: POS_TYP_ACT current POS_TYP The "current POS_TYP" status binector [POS_TYP_ACT] always shows the signal level of the last valid, i.e. transferred, status binector [POS_TYP].
See section about [POS_TYP] control binector.

[POS_TYP_ACT] = 0:
ABSOLUTE positioning through the [POS_TYP] control binector is transferred/valid.

[POS_TYP_ACT] = 1:
RELATIVE positioning through the [POS_TYP] control binector is transferred/valid.

B875: D_FWD_ACT
Positive direction active

The "D_FWD active" status binector [D_FWD_ACT] always shows the signal level of the last valid, i.e. transferred, status binector [D_FWD]. See section about [D_FWD] and [D_BWD] control binectors.

B876: D_BWD_ACT
Negative direction active

The "D_BWD active" status binector [D_BWD_ACT] always shows the signal level of the last valid, i.e. transferred, status binector [D_BWD]. See description of [D_FWD] and [D_BWD] control binectors.
See "Setup/positioning output" section.

B860: POS_OK
Position OK

The binector has a HIGH signal:

- if positioning is switched on ([POS] = HIGH)

and

- if, as in the case of ABSOLUTE and RELATIVE positioning, the current actual position value is within the assignable parameters of the position window (U859; ± tolerance in [LU]), referred to the expected position (valid position setpoint).

B861: POS_RUN
Positioning running

The status binector "positioning running" is only HIGH if the axis moves (ramp runs) with positioning selected ([POS] = HIGH).
i.e. [POS] = HIGH AND [AXS_RUN] = HIGH

B862: RFG_RUN
Axis in motion

The "Axis in motion" status binector will always be HIGH when the axis is moving (ramp-function generator running).
This may be the case during homing and/or positioning or when slowing down to a stop (positioning/homing disabled; invalid input [POS_TYP] with constant SET setpoint transfer, etc.).

B863: RU_ACT
Acceleration active

The binector will only be set HIGH when the RFG is accelerating, irrespective of the mode of operation (positioning, homing, etc.).

B864: RD_ACT
Deceleration active

The binector will only be set HIGH when the RFG is decelerating, irrespective of the mode of operation (positioning, homing, etc.).

B876: POS_DELTA
Position not yet reached

The binector will be set HIGH when positioning has been activated (POS = 1) but the target position has still not been reached (valid position setpoint).

If a new SET setpoint is transferred [SPV_RIE], [POS_DELTA] will also be reset again. The remaining traverse path will be deleted.

B866: FWD_RUN
Forwards running

The binector will only be set HIGH when the RFG has generated a positive movement, irrespective of the mode of operation (positioning, homing, etc.).

B863: BWD_RUN
Backwards running

The binector will only be set HIGH when the RFG has generated a negative movement, irrespective of the mode of operation (positioning, homing, etc.).

B868: SW_E_PLUS
Plus software limit switch

The binector will only be set HIGH when the software limit switches are active (approached); the movement has been limited by the Plus software limit switch.

B869: SW_E_PLUS Minus software limit switch

The binector will only be set HIGH when the software limit switches are active (approached); the movement has been limited by the Minus software limit switch.

Positioner/correction value and homing

B888: ARFD axis referenced

The binector is only set HIGH following a successful **homing** operation (valid measurement in the enabled travel direction [REF_D] taking account of the masking window function or active correction performed).
The signal remains HIGH until the ARFD binector is reset through REF_ON being set again.

The signal will automatically be reset if there is a POWER-OFF on the converter or [REF] is set again, unless an absolute value encoder is present (i.e. [ARFD] **remains** HIGH following the first valid reference mark if [REF] is on and a number of coarse pulses have been received (reference mark).

The signal is not continuously set to HIGH in the case of absolute value encoders.

NOTE

If an absolute value encoder is used, the software limit switches which require the signal [ARFD] = High at U863.2 for their activation, can be activated by manually setting the signal to high at U863.2.

CAUTION

The user is responsible for monitoring the signal and ensuring the appropriate interlocks are in place!!!

B892 : F_REF_WD fault Reference point correction outside window 2

Binector for masking window homing

(see "Masking window for homing" section)

Status binectors/connectors/visualization parameters

The parameter U862 BPos RM-Signal shows the status of the basic positioner as status signals.

Index 1 : BPos (K888) input
BIT0 = ENABLE_POS
BIT1 = RESERVIERT
BIT2 = POS
BIT3 = SETUP
BIT4 = POS_TYP_ACT (was: ABS_REL)
BIT5 = D_FWD_ACT
BIT6 = D_BWD_ACT
BIT7 = EXT_REF_OK B888 or B210 = 1
BIT8 = EXT_POS_OK
BIT9 = SET_TRIG
BIT10 = Internal POS_OK (reached position)

Index 2 : BPos output and homing command (K889)
BIT16 = B860 [POS_OK]
BIT17 = B861 [POS_RUN]
BIT18 = B862 [RFG_RUN]
BIT19 = B863 [RU_ACT]
BIT20 = B864 [RD_ACT]
BIT21 = B866 [FWD_RUN]
BIT22 = B867 [BWD_RUN]
BIT23 = B865 [POS_DELTA]
BIT24 = B868 [SW_E_PLUS]
BIT25 = B869 [SW_E_MINUS]
BIT26 = B888 [ARFD]
BIT27 = B892 [F_REF_WD]

7.2.3.4 Preprocessing of position setpoint

The correction block is used to preprocess the position setpoint. The correction block can be found in FD789c and is inserted into the time slot using U953.62.

Its function is to provide the corresponding signals for the position controller and the position detection.

Example of the connections to the basic unit when the motor encoder is being used:

Position control [FD340]

position setpoint	P190 = 882
Speed setpoint	P209 = 881

Position detection [FD330]

correction value	P174 = 885
Correct position POV/NOV	P174 = 889, P175 = 890
Enable measurement memory	P179 = 891

If a rotary axis is in use, the actual position has to be corrected by means of the control inputs in order to detect the position correctly.

In the case of homing, the correction value is taken from the position measurement memory.

Any rate-of-change limitation required is provided at this point in order to pass the corrected actual value to the positioner (without rate-of-change limitation) during homing. This causes the position controller to function as a closed control loop and carry out homing corrections without any jerks or sudden changes.

Smoothing adaptation (rate-of-change limitation)

This programmable rate-of-change limitation is estimated using an adaptive connector input (U881).
Rate-of-change limitation is disabled if the parameter has a value of 0 or is assigned a value of 0% from an adaptive connector input.

The values and parameters can be changed if the ramp function generator is not active (U876 V- set IN = 0).

NOTE

"Computed" smoothing as found in the "deluxe" ramp function generator has been dispensed with owing to the amount of computing time required.

Masking window for homing

Setting of a homing point on the fly can be influenced through two movable windows. The points of reference of the windows are based on the reference position of U874.2 or the source on U877.3 and define the permissible deviation between the reference position and the measured position.
The windows allow setting of the homing point to be suppressed if the deviations are too small or too large.

NOTE

The contents of the windows are only used when the axis is referenced (ARFD = 1). The first sensing of the reference mark following runup leads to a setting of the homing point, irrespective of the window settings.

If the deviation is within the innermost window (window 1), the homing point is not set. Neither is the homing point set if the deviation is outside the outermost window (window 2).
The output B892 error homing point proximity switch outside window 2 is activated.
This output signal stays on until a homing point mark is next evaluated.

Both windows can be disabled individually by assigning them values of 0.

Fault and warning messages

The free BASIC POSITIONER blocks do not generate any fault or warning messages. The positioning software does not respond to messages caused by incorrect parameters either (e.g. violation of limit values).

Definitions

Def. homing:

Homing on the fly, also referred to as post-homing, appears in the correction value/homing block, function diagram 789c, with window evaluation.

Homing as homing movement mode with reversing cam appears in the setting value/setpoint block function diagram 789a.

7.2.3.5 Application example

Definitions and warnings

Qualified personnel within the scope of the documentation are individuals who are familiar with the erection, installation, commissioning, operation and maintenance of the SIMOVERT MASTERDRIVES product and who have the appropriate qualifications to perform their activities, such as:

- ♦ trained and authorized to energize, de-energize, ground and tag circuits and equipment in accordance with established safety procedures.
- ♦ trained in the proper care and use of protective equipment in accordance with established safety procedures.
- ♦ trained in rendering first aid.

This document does not contain any explicit warnings. However, reference is made to the warnings contained in the operating instructions for the relevant product in the MASTERDRIVES range.

The application examples are provided free of charge. They may be copied, modified and used and passed on to third parties. They may only be passed on in a complete and unmodified state together with all patent rights notices. The commercial distribution to third parties (e.g. as shareware or freeware) is only permitted with the prior written permission of Siemens AG.

NOTE

As the application examples are provided to you free of charge, the authors and copyright holders are unable to entertain any warranty claims. You use them at your own risk. The authors and copyright holders shall only be liable for their premeditated actions and gross negligence. All other claims are excluded. In particular the authors and copyright holders accept no liability for any defects or consequential damages. Please let us know if you find any errors in the application examples.

Standard applications

Basic applications in the form of scripts including full documentation
are available, e.g.:

- full functionality of the basic positioner through PROFIBUS interface;
- basic positioner through terminal strip interface,
- etc..

NOTE

Standard applications are available including parameter assignment and documentation. These can be obtained from your regional SIEMENS AG office and are available from the Application Center for Production Machines.

Lag monitoring

An example of lag monitoring with variable limit values [in LU] on U015 for Standstill Lag and U016 for Travel Lag.

If F148 trips, the drive shuts down with pulse disable (drive coasts).

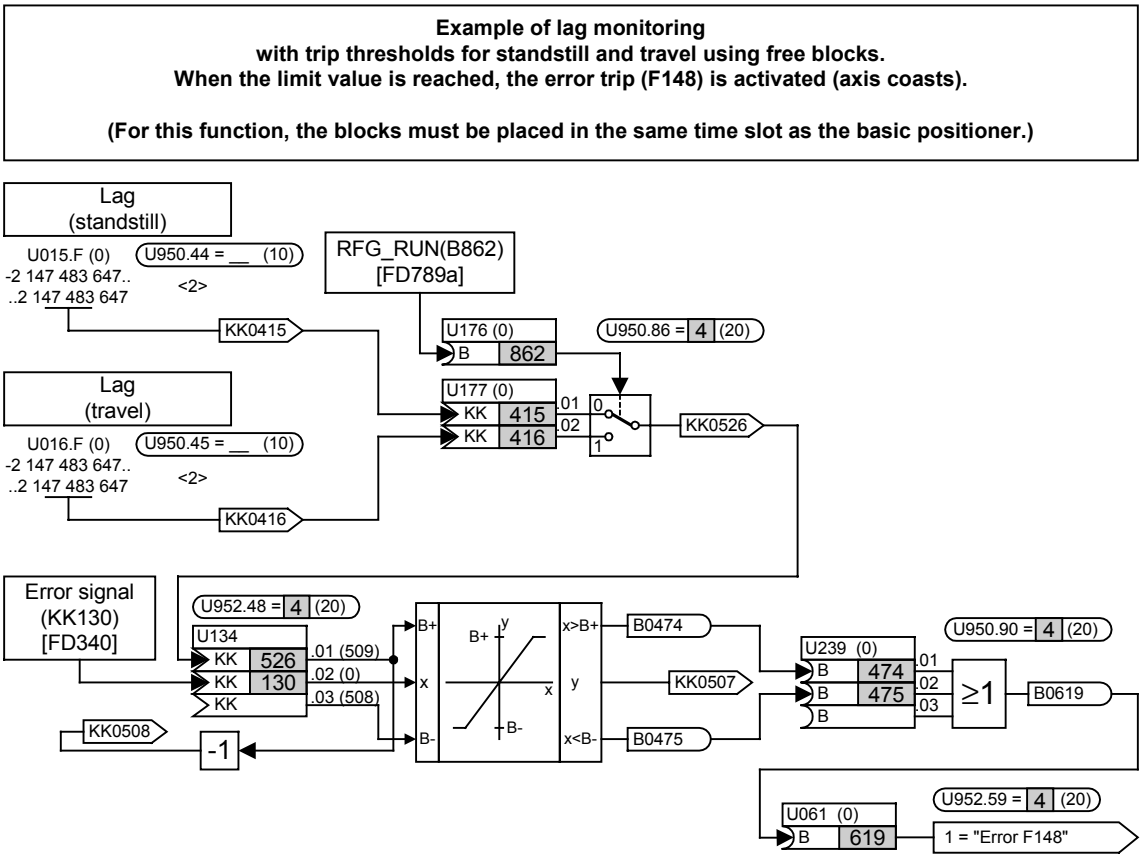

Fig. 7-12 Implement lag monitoring using free blocks

NOTE

The user should determine the shutdown strategy for the device using the appropriate operating mode OFF1, OFF2, OFF3 with brake control or pulse disabling through fault message triggering (as in the example).

Script file: Example of parameters for lag monitoring

```
SET LOG ON
REM ************************************************************
REM * File name: EP_Schlepp.txt                                *
REM * Script file for MASTERDRIVES Compact Plus and *
REM * MASTERDRIVES Compact                                     *
REM * Date    : 27.09.2000                                    *
REM *                                                          *
REM *  Example of lag monitoring using free *
REM *  blocks.                                                 *
REM *  Standstill Lag 100 LU                                   *
REM *  Travel Lag 1000 LU                                      *
REM *                                                          *
REM ************************************************************


REM ************************************************************
REM ** Fixed setpoints for Standstill Lag [FD705] **
REM ************************************************************

REM ---Insert in time slot
WRITE 2950 44 4
REM ---Standstill Lag
WRITE 2015 0 100

REM ************************************************************


REM ************************************************************
REM ** Fixed setpoints for Travel Lag [FD705  **
REM ************************************************************

REM ---Insert in time slot
WRITE 2950 45 4
REM ---Travel Lag
WRITE 2016 0 1000

REM ************************************************************
REM **    Analog signal selector switches [FD750]          **
REM ************************************************************

REM ---Insert in time slot
WRITE 2950 86 4
REM ---Switch of RFG_RUN axis running
WRITE 2176 0 0x862
REM ---Standstill Lag
WRITE 2177 1 0x415
REM ---Travel Lag
WRITE 2177 2 0x416
```

```
REM ************************************************************
REM ** Limiters with threshold checkback signal [FD735] **
REM ************************************************************

REM ---Insert in time slot
WRITE 2952 48 4
REM ---Pass limit value from switch
WRITE 2134 1 0x526
REM ---Control difference from position controller as input [FD340]
WRITE 2134 2 0x130

REM ************************************************************
REM **    OR with limit value signal  [FD765]                 **
REM ************************************************************

REM ---Insert in time slot
WRITE 2950 90 4
REM ---Evaluate upper B+ from limiter
WRITE 2239 1 0x474
REM ---Evaluate upper B- from limiter
WRITE 2239 2 0x475


REM ************************************************************

REM ************************************************************
REM **    Trigger fault message [FD710]                       **
REM ************************************************************

REM ---Insert in time slot
WRITE 2952 59 4
REM ---Wire up OR output
WRITE 2061 0 619

REM ************************************************************
SET LOG OFF
```

7.2.3.6 Change history

V1.60

- Selection of speed-dependent enable "Homing on the fly" U878.5 / U878.6, see Section 7.2.3.3 "Operating modes".
- Measured value _OK U878.7 for correction block / homing newly introduced.

NOTICE

Factory setting for motor encoder (B70)
If a machine encoder is used B71 (measured value valid / machine encoder) has to be parameterized.

7.3 Converter functions

7.3.1 Friction characteristic function (function diagram 399)

7.3.1.1 Friction characteristic

The friction characteristic is made up of 10 intermediate points each with a speed value (x axis) and a torque value (y axis). The pair of values (U215, U216) defining the intermediate point is to be given in % of the reference speed and in % of the reference torque.

The characteristic refers to the absolute value of the input variable (U214, e. g. KK0091 actual speed value). The derived torque (K0615) is output as a positive or negative value according to the current sign of the input. Weighting of the friction characteristic can be performed with the aid of parameter U217. BICO parameter U218 serves for selecting the source from which the friction characteristic is switched in (switched out => K0615 = 0).

7.3.1.2 Friction characteristic recording (automatic procedure)

Start of measuring

BICO parameter U219 is used to select the source for starting automatic recording of the friction characteristic. When the status of this source changes from 0 to 1 friction characteristic recording is started, feedforward control of the friction characteristic is prevented internally (K0615 = 0).

In the first step, the necessary enables and assignments are checked:

Prescribed assignments:

- Master drive (P587 = 0)
- P260 = 153 or P262 = 153;
- P228 = 152;

Necessary enables:

- Enable pulse
- Enable speed control
- Enable direction of rotation (positive and/or negative)
- Positive and negative speed limits (P452, P453) chosen so that, with due regard to the direction of rotation enabled, the characteristic takes full effect in the pertinent direction of rotation.

If incorrect assignments are made or an enable is absent, fault F99 occurs.

If the assignments and enables are correct, the converter displays alarm A72 and waits for the ON command in order to begin with rotary measuring. If the ON command is not given within 30s, friction characteristic recording is interrupted with fault F99.

NOTE

Measuring can be started only from converter status °008 and °009.

Rotary measuring

After the ON command, the converter approaches all characteristic points independently. The ramp time is independently determined by the converter, but is not less than 2 s. If both directions of rotation are enabled, the positive and negative speed values of the characteristic points are approached alternately. The mean is derived from the measured friction torques.

If it is not possible to approach all characteristic points in the positive and negative directions of rotation, the converter displays alarm A74. At the end of friction characteristic recording, the drive is stopped, the values recorded (provided that no fault occurs, or recording is not interrupted) are transferred to parameter U216 and the converter is switched off. Binector B690 changes to 1 and indicates the end of friction characteristic recording. After the friction characteristic recording command (U219) is cancelled, binector B690 is reset to 0.

Interruption of measuring

Measuring can be interrupted at any time by canceling the ON command or by a fault (with the exception of F99).

The converter then displays alarm A73 and waits to be switched ON again. After being switched ON (or fault acknowledgement and switching ON) the converter continues measuring from the point at which the interruption occurred. If there is a delay of longer than 5min before the converter is switched ON, the converter ends friction characteristic recording with fault F99.

Termination of measuring

Friction characteristic recording can be interrupted by the converter itself on occurrence of fault F99. Fault F99 while measuring is in progress is caused by:

- BICO change, or function dataset change (not allowed during friction characteristic recording)
- Change/cancellation of direction of rotation enable
- Speed setpoint not reached
- Measured value not plausible (e.g. < 0 in the case of positive direction of rotation)
- Cancellation of friction characteristic recording command (U219 = 0)

The values acquired up until termination of measuring are **not** transferred to parameter U216.

Friction characteristic faults and alarms

F99:

Measuring has been terminated, the reason is given by the fault variable (P949).

Meaning of the fault variable:

Bit	Val.	Meaning
0	1	Positive direction of rotation not possible
1	2	Negative direction of rotation not possible
2	4	Releases absent
3	8	Assignment not allowed
4	16	Termination through cancellation of the record command
5	32	Dataset switchover
6	64	Time exceeded (switch ON or switch ON again)
7	128	Measuring fault: Measuring point not reached or measured value not plausible.

A72:

Waiting for ON command, max. 30 s.

A73:

Waiting for ON command when measuring interrupted, max. 5 min.

A74:

Measuring of **all** characteristic points in the positive **and** negative directions of rotation is not possible.

7.3.2 Torque constant adaptation for synchronous motors (function diagram 393)

The function "torque constant adaptation for synchronous motors" serves to improve the absolute torque accuracy for control of synchronous motors. Variations in the magnetization of the permanent magnets arise from manufacturing tolerances and temperature fluctuations.

This "kT estimator" function adapts the torque constant kT [Nm/A] in the control to the instantaneous magnetization.

It makes sense to use the kT estimator only in combination with the friction characteristic because the kT estimator corrects only the internal torque of the machine. The friction losses must be compensated by an additional torque derived from the friction characteristic.

Using the kT estimator

The kT estimator needs the most exact possible motor parameter values in order to attain high torque accuracy. Before use is made of the kT estimator, motor identification (P115 = 2) must therefore be performed to define the values for P119, P120 and P121. The motor should be at room temperature for identification.

The motor temperature is needed by the estimator for tracking the temperature-dependent variables. If no motor temperature sensor is wired up, good accuracy is attained only during operation at the temperature at which motor identification was performed.

The kT estimator is not activated until a definite speed (P091.1) is reached. The voltage at the converter terminals is always subject to minor errors, introduced by voltage drops at the semiconductors, etc. The lower the speed and hence the output voltage, the more the estimate is disturbed by minor voltage errors. That is why the estimate is turned off below a definite speed (factory setting: 20 % of rated speed). When the speed falls below this level, the last-estimated value is frozen.

The estimator is activated by setting the maximum deviation (P091.2) to a value greater than 0 %. To turn on the estimator, this value can be set to 30 %.

The standstill torque constant (P098) is preassigned with the stored value in the case of a Siemens motor, and with the value M_rated/i_rated in the case of a non-Siemens motor. The value can vary as a result of manufacturing tolerances. If the estimator has been activated and the motor speed is higher than the selected speed, a corrected standstill torque constant value can be read from visualization parameter r088. This value can then be entered in P098.

The temperature dependence (P090.2) of the magnet material is set to 12 % at the factory. This means that magnetization declines by 12 % when the temperature of the rotor rises by 100 K. This is the usual value for the neodymium-iron-boron magnet material now used. If no temperature sensor is connected, the temperature adaptation is turned off.

The temperature adaptation is also effective when the estimated value is frozen or when the estimator was turned off with P091.2 = 0.

7.3.3 Tr adaptation function (function diagram 394)

The Tr adaptation function serves to improve torque accuracy in the case of induction machine control. The rotor time constant (Tr) has a substantial effect on determining the slip frequency, and hence on the calculated field angle.

Because it includes the rotor resistance, the rotor time constant depends strongly on temperature and can therefore vary by up to 50 %. Such variations lead to wrong orientation of the dq system and hence to an error in the injected torque variable.

Initial start-up of the Tr adaptation

Temperature tracking for the rotor time constant is based on a voltage model that has to operate with the most precise possible motor parameters. Before the Tr adaptation is used, motor identification (P115 = 2) **must** be performed to define the values P111.1 to 10, P121, P122, P123. The motor should be at room temperature during identification. In the case of a non-Siemens induction machine (P095 = 4), automatic parameterization (P115 = 1) is necessary before motor identification starts.

Tr adaptation is turned on by setting P092 to a value greater than 0 %.

Because of the underlying principle, the voltage model returns sensible results only at rotor frequencies greater than 3 Hz and at load currents greater than 0.15 x motor rated current. If these conditions are not satisfied, Tr adaptation is turned off internally and the last-calculated value is frozen. Visualization parameter r093 indicates the actual rotor time constant value effective in the flux model referred to P124.

7.3.4 Position test function

On synchronous motors, the torque control must be able to detect the position of the rotor in the motor so that the current is always injected at the correct position. That position is supplied by the encoder, which is installed in the motor (resolver, multiturn encoder, encoder). The encoder is mounted on the rotor wit the correct alignment in the factory. However, if the encoder is replaced as the result of a fault or if a non-Siemens synchronous motor is operated on the MASTER-DRIVES converter, the alignment of the encoder and the direction of rotation must be checked and corrected, if necessary.

The position test consists of injecting a current with a fixed angular position into the stator of the synchronous motor. The rotor must be free to move so that it can align itself toward the injected current with its permanent magnet (if necessary, release the holding brake and decouple from the mechanical system).

1. Switching on

The converter switches to status "Operation with position test" when the ON command is output and while parameter P115 = 8 or value 1 is pending on binector input "Source position test" (P549).

2. Setpoint

The user must set a current setpoint so that the motor aligns itself (e.g. 100 % at P260 "source M(set)" or 1 % speed setpoint, which also results in 100 % torque setpoint via the speed controller).
The current causes the free moving motor to align itself to the fixed electrical angle. Depending on the number of poles of the motor, this will be one of several possible mechanical angular positions within one revolution of the motor. (For example, for a six-pole motor there are three mechanical angular positions within one revolution into which the motor can lock. It is of no consequence for the adjustment into which of the three positions the motor locks.)

3. Encoder adjustment

The incorrect orientation of the encoder can be read off in mechanical degrees in r286 "position test angle" (function diagram 390). A value of ± 1° mechanical for motors with a low number of poles (<= 8 poles) lies within the range of measuring inaccuracy and need not be altered. (This degree of inaccuracy can even be induced by turning the motor shaft slightly by hand during measurement.)
When the encoder is replaced, correction should preferably be made mechanically, i.e. by disconnecting the encoder, turning it until the "position test angle" r286 shows the value 0° and then tightening it again so that the encoder is again installed in the position as set in the factory. If it is not completely safe to align the encoder mechanically during operation, the deviation can also be corrected by parameterizing an offset in P132 "angular offset" to a position test angle r286 of 0°. Making the correction in the parameters is especially recommended for motors of non-Siemens suppliers who install their encoders in a standard position other than that of SIEMENS. **During operation with position test**, it is possible to change parameter P132 "angular offset" manually with the position test, or reduce it automatically with a falling edge at binector input "source position test" (P549) by the current displayed value r286 "position test angle".

In both cases, the position test angle r286 must finally show the value 0°.

4. Checking the direction of rotation

Not only the angular position but also the direction of rotation of the encoder can be checked:
If the position test is performed during operation, the current pointer can be turned with bit 11 in control word 1 "enable positive direction of rotation" (see function diagram 180, P571 "Q.positive DR").
If the bit is switched from 0 to 1, the injected current pointer slowly turns to the right by one "electrical revolution" (approx. 1 to 2 s). This turns the motor one pole division to the right. Connector KK186 ("theta(I cont.)" function diagram 390) then turns one full revolution in the positive direction (0 % > 100 % > +199 % / –200 % > –100 % > 0 %). (If the bit is switched from 1 to 0, the procedure is reversed.)
If KK186 does not turn a full revolution, either the parameterized number of pole pairs (P109) is incorrect (how far did the motor turn mechanically, does it correspond to the pole pair number?) or has the encoder been incorrectly parameterized (incorrect number of increments?).
If KK186 completes a full revolution during the test but in the opposite direction, either a track has been reversed on the encoder or two phases have been reversed on the motor (correct on motor or on encoder and repeat point 3 "encoder adjustment").

5. Normal operation

NOTE

Do not forget to reset parameters P115, P260 or the binector at P549 so that normal current-controlled operation can continue!

NOTE about removing the encoder on SIEMENS motors

If an encoder or multiturn encoder is to be completely removed, a screw is required to force off the encoder! The encoder has a conical shaft end that is inserted into the motor shaft. Even after all fixing screws have been removed, the encoder shaft is usually fixed so tight in the motor shaft that the encoder can only be removed without damaging it by forcing it out with a special screw.

Depending on the design of the encoder shaft, different screws will be required for forcing off the encoder (see Fig. 7-13 and Fig. 7-14).

DANGER

If the encoder is adjusted incorrectly, the motor can overspeed.

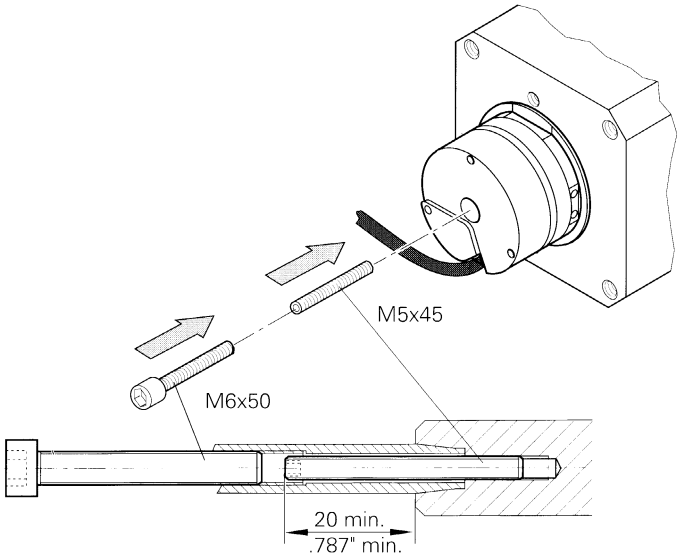

Fig. 7-13 Forcing off an encoder of old design

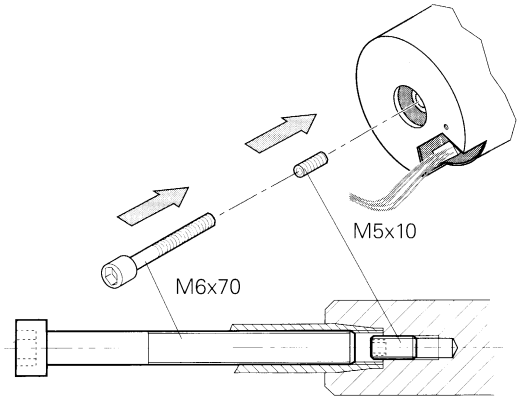

Fig. 7-14 Forcing off an encoder of new design

7.3.5 Function "PRBS signal with recording" (function diagram 796)

Recording

The free block "PRBS signal with recording" generates a pseudo random binary sequence which can be scaled with a selectable amplitude (U477 "PRBS-Ampl"). This signal is available on K630. Connector K630 supplies a noise signal with frequency components of 0.6 Hz to 625 Hz at a pulse frequency of 5 kHz (and recording of 2 single connectors). The noise signal is called "pseudo random" because even though the bit sequence of a cycle has no repetitions, the noise generator always supplies the same bit sequence on each start.

The block can record one or two channels simultaneously, physically using the trace memory in the converter. If the noise generator is assigned to the time slot (U953.70 = 2), the trace must be removed (U953.72 = 20), as both are supplied via the same connectors and both parameters and use the same memory.

Recording is always performed in T2. Unlike the normal trace, with the PRBS signal a series of recordings (U478 "PRBS cycles") can be started (U478 "PRBS cycles") and those recordings then averaged through addition. As a result, random interference is averaged out and even small noise amplitudes produce good results. In order to prevent the value range from immediately overflowing, the DC value is derived by an additional noise cycle that is automatically transmitted before the measurement itself. However, if a counter overflow occurs, alarm A032 is set. The alarm is only reset when a measurement is restarted. Monitoring parameters n479 "PRBS cycles CntD" counts the set cycles back to 0 during measurement. In this way, measuring progress is measured and the occurrence of alarm A032 can be detected, if necessary.

Reading out

As recording is configured and started using the same parameters (U480, U481, U488) as normal trace, recording can be configured and started in SIMOVIS/DriveMonitor with the Trace menu item. (Please first ensure that the time slot for noise is activated and the time slot for the trace bock is deactivated! U953.72 = 20 and U953.70 = 2).

In the case of SIMOVIS/DriveMonitor, item "Trace" in menu "Diagnosis" must be selected. In the window "Settings.." you can then select the connector(s) to be recorded. No more than the first two channels can be activated. The "recording interval" or "trigger settings" bear no relevance to the PRBS recording. Recording starts as soon as you click on the "Start" button.

The recorded data are automatically stored in file "C:\Siemens\SIMOVIS\Projects\Drives\MASTERDRIVES MC\ TRACE.TXT" when read out with SIMOVIS/DriveMonitor. Existing files are overwritten. The file is an ASCII file with integer values and commas as separators, which can be imported into commercial mathematical programs.

Evaluation

Evaluation of the data in a mathematical program is **the task of the user**, i.e. the user must first create a worksheet in a mathematical program in which he or she edits, evaluates, and graphically represents the data as required.
One suitable program is, for example, the mathematical software" "Mathcad " produced by the company MathSoft (http://www.mathsoft.com), which provides a relatively uncomplicated introduction to the subject area.

The following graphics show the amplitude and phase response of the closed speed control loop (factory setting, without optimization). The data was evaluated and displayed graphically using "Mathcad 8 ".

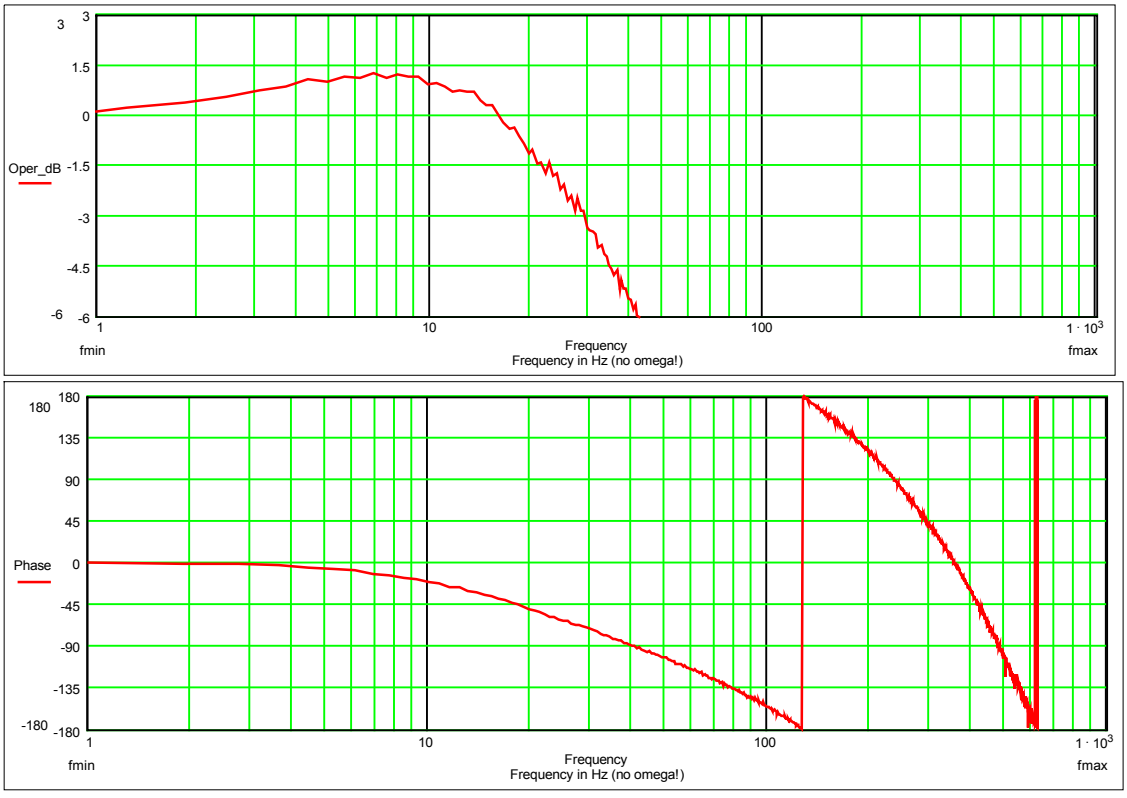

Fig. 7-15

7.3.6 Function "speed filter" (function diagram 361)

The free block "speed filter" contains three digital filters of the second order connected in series. They are always calculated in the time slot of the speed controller (T1) and can be wired freely. It is usual practice to insert the filter block in front of the speed controller (P252 = KK0152 and P228 = KK0158) when the PI controller is operated as a speed controller (P238 = 0 (default)) or downstream of the speed controller (P252 = K0153 and P260 = KK0158) when the PIR controller is employed as a speed controller (P238 = 1). The advantage of this is that vibrations that are injected by means of the speed **set**point (e.g. position controller output) are also acquired.

To prevent further deadtimes from resulting in the speed control loop in this configuration, the arithmetic sequence of the individual blocks must be changed such that the filter block is calculated after the setpoint/actual value difference has been generated. This can be set in parameter U963 (arithmetic sequence): U963.42 = 5 (filter), U963.43 = 2 (smoothing elements), U963.45 = 3 (setpoint/actual value difference generation).

Application and system analysis

It is possible to improve the stability of the control loop using filters. If the mechanical transmission elements contain disturbing frequencies they can be removed with the low-pass filters or band-stop filters. However, it is important to note that these filters increase the sum of the small delay times and the substitute delay time of the speed control loop and can therefore not be used in all cases.

First of all, the natural frequencies of the system must be determined. The simplest way of doing this is to inject or deactivate a torque setpoint in steps. The natural vibration of the system overlays the progression of the speed actual value after the step changes. These vibrations can be induced by triggering "AUS2" during a speed controlled acceleration and therefore deactivating the torque suddenly. If the vibrations are to be induced by injecting a square-wave additional torque setpoint, the speed controller must be set very slowly so that it does not intervene to compensate.

A good overview of the vibrations is provided by recording the speed actual value for a whole series of different speed actual values. The frequency spectra of the recordings are represented in a staggered 3D arrangement in a cascade diagram. In such a diagram it is possible to differentiate between the speed-dependent harmonic components and the natural frequencies of the system. The speed-dependent harmonic components which, for example, result from the unbalance or eccentricity appear as straight lines forming the origin in the cascade diagram. The natural frequencies of the system appear in the diagram as lines of constant frequency.

An examination of the transmission function of the open speed control loop (e.g. using the built-in noise excitation, function diagram 796) provides information about the amplitude and phase margin of the control loop for critical frequencies. As the filters always change the phase progression it also possible to change the phase margin specifically by applying filters. For example, the phase of frequencies above the blocking frequency is raised by a band-stop filter, which can be utilized to increase the phase margin.

As low natural frequencies always have a detrimental effect on the dynamics and therefore fault suppression of the system, it is worth examining the source of natural frequencies in the mechanical system. By measuring the transmission functions with additional encoders, the measured natural frequencies can be assigned to the mechanical components and their frequencies increased specifically by using more rigid components or lighter masses.

Example 1 Low pass (P256 = 2; P254 = 50 Hz)

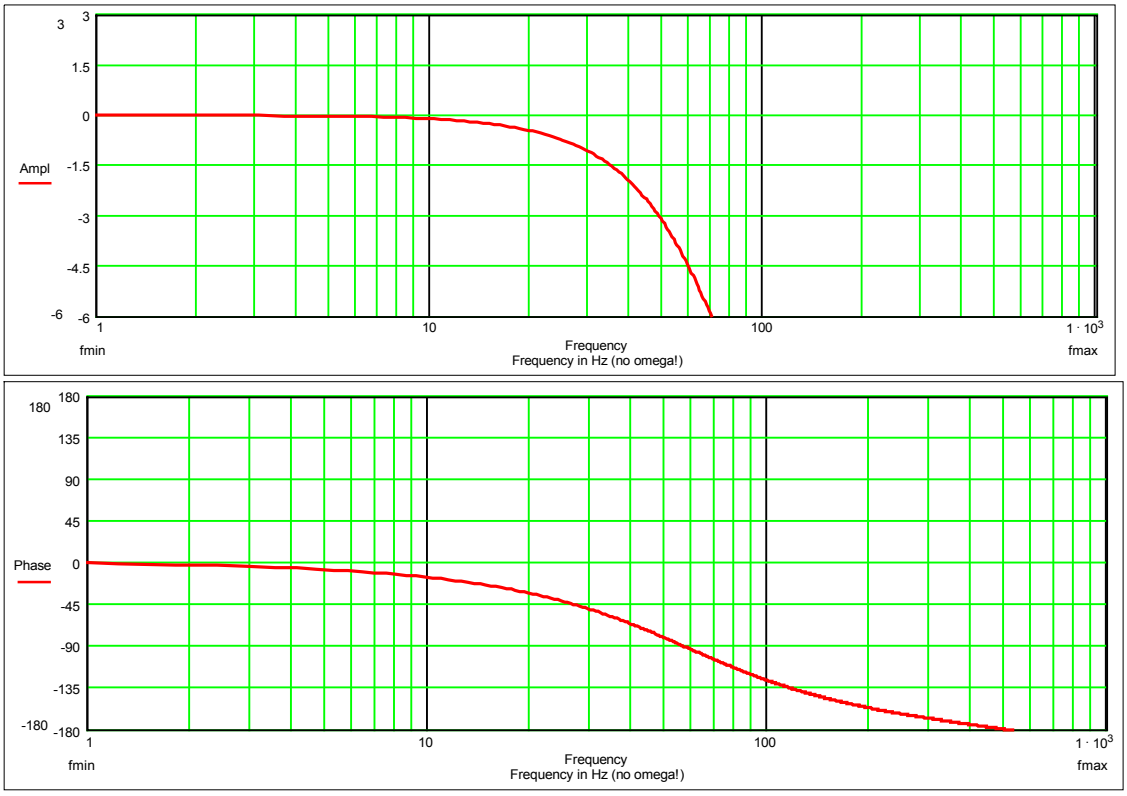

Example 2 Band-stop filter of average quality and semi-suppression of the resonant frequency
(P256 = 1; P254 = 50 Hz; P253 = 1.0; P257 = 50 %)

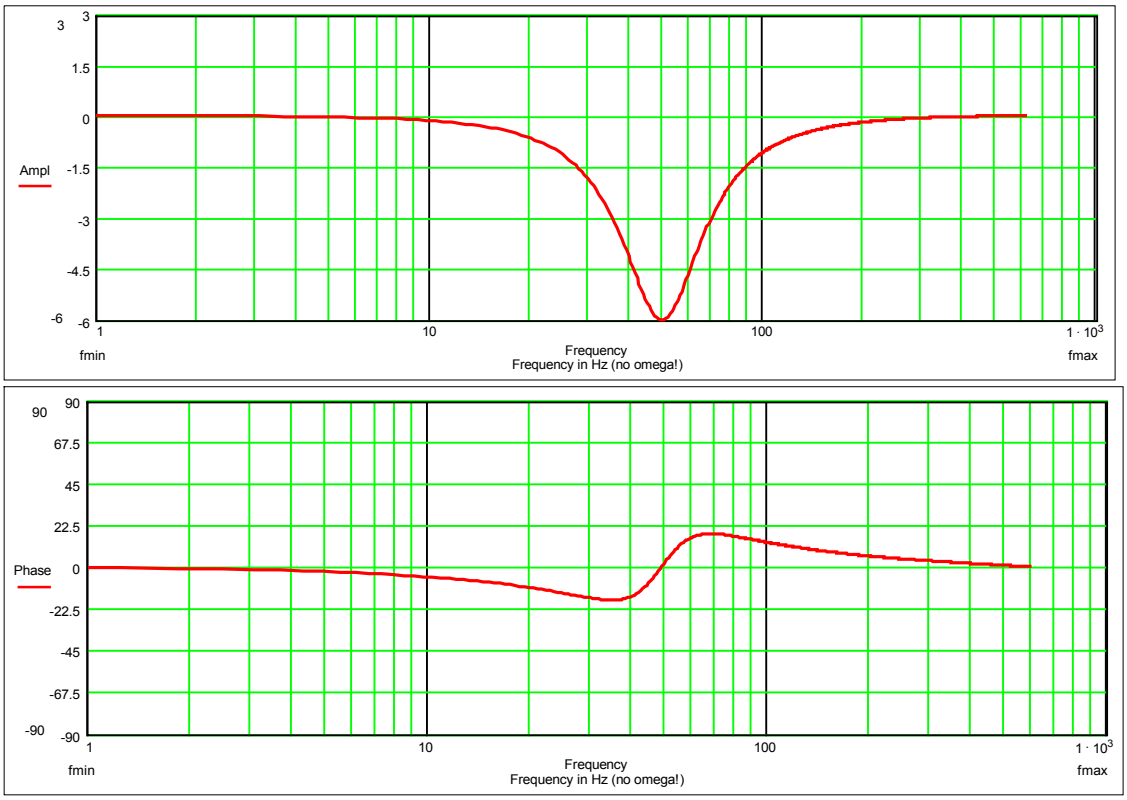

Example 3 Band-stop filter with full suppression and high quality:
(P256 = 1; P254 = 50 Hz; P253 = 3.0; P257 = 0 %)

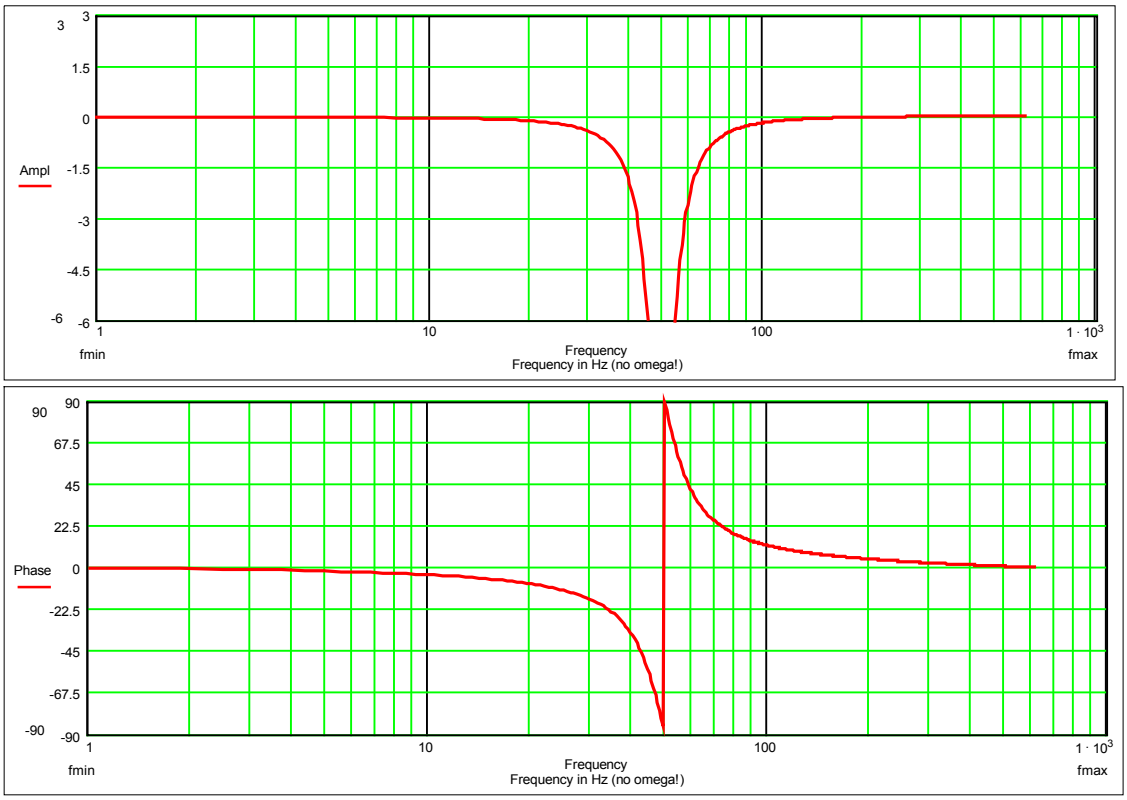

7.3.7 "Speed controller characteristic" function (function diagram 360)

You can select the speed controller characteristic via parameter P238.

P238 = 0: PI controller (default)

The speed controller is optimized in accordance with the known rules, e.g. Symmetrical Optimum.

While the controller is being optimized, e.g. according to the Symmetrical Optimum for a good fault response, overshoots occur in the response to setpoint changes. This should be reduced by appropriate setpoint smoothing (e.g. P221) or using the reference model (P238 = 1).

P238 = 1: PIR controller (reference model for the I-action component)

The response to setpoints by the speed controller can be improved (overshoot reduction) by means of the PIR controller characteristic (reference model). This is conditional on the controller being set according to PI controller conditions (see above P238 = 0). For a PIR controller (P238 = 1), the time constant of the reference model (P239) for the PIR controller must also be adjusted such that, for example, the smallest possible overshoot occurs in response to a setpoint step change.
Plant conditions permitting, you can do this in the following way: Set TN (P240) to a value of 0 (make note of original value!) and trace K0155 as the setpoint is changed, the time constant (P239) must be adjusted such that the areas above and below the zero line of K0155 are approximately equal in size. Then reset TN (P240) to its original value.

References relevant to reference model:
"Electrical Feed Drives in Automation"
SIEMENS AG; H.Groß, J.Hamann, G.Wiegärtner
(ISBN: 3-89578-058-8)

NOTES

- When you use the reference model (P238 = 1), the source selected in P228 (Src n (deviation) is inoperative; KK152 is linked permanently to the speed controller internally (as per default setting for P228).
- When you use the reference model (P238 = 1), the sampling time / sampling sequence of the speed controller itself is determined via U953.45 / U963.45 (not just the speed controller total as per P238 = 0); i.e. the sampling time / sampling sequence set via n959.52 / n969.52 is inoperative in this case.

7.4 Special functions

7.4.1 Loading firmware

The firmware supplied in the units is stored non-volatilely in electrically erasable memory chips, so-called flash EPROMs. If required, the firmware can be erased and overwritten with new firmware.

It is necessary to import new firmware if

- an extended function scope is available in a new firmware version and this needs to be used, or if
- user-specific firmware needs to be loaded into the units.

The firmware can be loaded using a laptop or PC and the data is transferred into the units via the serial interface SCom or SCom1. A special cable is necessary for importing the firmware.

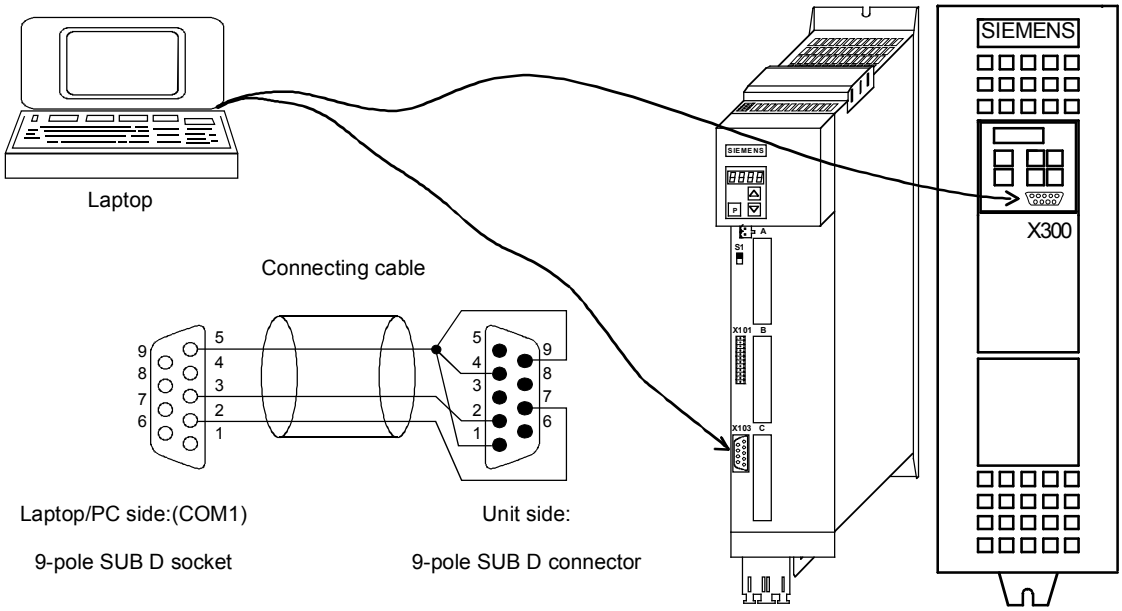

Fig. 7-16 Loading firmware by means of laptop or PC

Loading the firmware from a laptop/PC entails the steps listed below. All other programs using the same PC port (COM1 or COM2) (e.g. SIMOVIS/DriveMonitor) must be closed from the outset.

If problems should occur with the loading program bsl.exe under Windows NT, the program Win BSL.exe is also available after installation of DriveMonitor (Path: \Siemens\DriveMonitor\ P7vrvisx\SYSTEM\WINBSL).

Before you load the software, save your parameter settings (upread with OP1S or SIMOVIS, or upload with DriveMonitor)!

If the position after the decimal point of the firmware changes (e.g. when upgrading from 1.3x to 1.4x), the module is reset in full. A CUMC signals status °000 and waits for the power section definition (input of the converter ID in P70).

The following parameters are read and stored when upread from SIMOVIS (upload from DriveMonitor), but not written to the unit when downloaded for safety reasons:

Parameter number	Parameter name
P060	Menu selection
P070	Order No. 6SE70..
P072	Conv.current(s)
P073	Conv.power(s)
P700	IF bus address
P701	IF baudrate
P702	IF no. of PKW
P703	IF no. of PZD
P918	CB bus address
P952	Number of faults
P970	Factory setting
P971	EEPROM accept.
U976	Product number
U977	PIN

Table 7-6 Parameters that cannot be changed on downloading with SIMOVIS/DriveMontitor

Where necessary, these parameters must be parameterized separately, for example, via the parameter menu of SIMOVIS/DriveMonitor; via a script file, or directly on the converter. The values of the specified parameters can be viewed by opening the backed-up download file in SIMOVIS/DriveMonitor "offline".

When **upgrading a MASTERDRIVES MC to a current firmware version**, we make a distinction between 2 cases:

1. Only the third position of the version number changes (e.g. from V1.40 to V1.41). In this case, the firmware can be loaded directly into the unit. The parameterization remains the same.
2. The second position of the version number changes (the third position is then of no significance, e.g. from V1.32 to 1.40). In this case, the parameterization must be saved with SIMOVIS/DriveMonitor. It is important to remember to use the differences from the factory setting **only** (under SIMOVIS: File, Upread, Base unit: changes only... , under DriveMonitor: File, Upload...).
   The new firmware is then loaded into the unit. When initialization is complete, all parameters are reset to the factory setting. Now the file previously generated can be loaded back into the unit with SIMOVIS/DriveMonitor (under File, Download).

The first and second position of the firmware version can be read out in r069.01 and the third position corresponds to the first position after the decimal point in r828.01=0.1 (e.g. V1.32 corresponds to r69.01=1.3 and r828.01=0.2).

When upgrading from versions 1.1x, 1.2x to version 1.3, the following measures are **also** necessary.

When upreading a parameter data set from firmware V1.0, V1.1, or V1.2 and downloading to firmware V1.3 and higher:

U953 ⇒ **CAUTION: After downloading, these values must be entered in the following indices!**
(not necessary when upgrading firmware from V1.3 to a higher version)

U953.40 = 3 ⇒ Setpoint channel with interpolator for position controller.
Please note the ramp-function bypass newly introduced in V1.30 in the setpoint channel on function diagram 320.7 and 320.8.

U953.41 = 1 ⇒ Speed controller droop

U953.42 = 1 ⇒ Band-stop filter

U953.43 = 1 ⇒ Setpoint and actual value smoothing

U953.44 = 1 ⇒ DT1 element

U953.45 = 1 ⇒ Addition setpoint and actual values

Otherwise the function blocks of the speed controller (function diagram 360) are not calculated.

P137 ⇒ Rejection of parameter (number of marks of external encoders) on parameter download
Input has been changed from a power of two to an absolute number of marks (in the case of V1.3x).

P360 ⇒ Upread/download where there is a deviation from the factory setting does not function with V1.30.
However, the problem has been eliminated with V1.31 and higher.

P380, P381 ⇒ If the motor temperature is masked by parameter value 300, the parameter is rejected on downloading (masked by P131 = 0; no temperature sensor).

P806 ⇒ If there is no blocking protection (new in Version 1.30), P806 = 2 must be set.
Please also note the ramp-function generator bypass newly introduced in function diagram 320. If you set P772 = 0, this function can be deactivated and performance is then the same as for older firmware versions 1.2x.

DANGER

As a consequence, when the technology function synchronism is used as a free block in an AUS command, the drive is **not** stopped. When using this technology, factory setting P772 = 1 should be retained!

P647, P648: The meaning of the parameters has only changed for **compact/chassis type units**:

Meaning	V1.1x, V1.2x	V1.3x and higher
Normal digital input	0	0
Immediate pulse disable (AUS2) with rising signal edge	2	1
Immediate pulse disable (AUS2) with falling signal edge	1	2
Transfer of the positional measuring value with rising edge	4	3
Transfer of the positional measuring value with falling edge	3	4

On compact PLUS units the meaning of P647 and 648 has not changed.

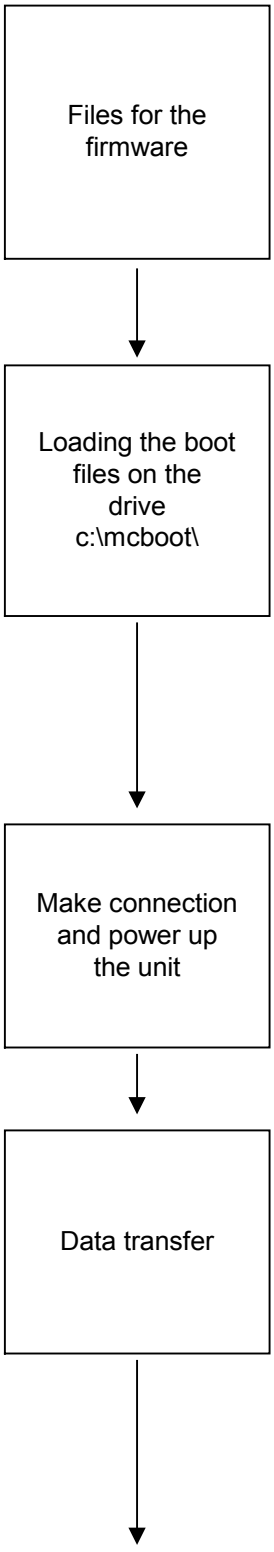

As a general rule, you will receive the firmware in the form of a self-unpacking *.exe-File:
Mc_vxxx.exe for Compact, chassis and cubicle units
Mcp_vxxx.exe for Compact PLUS units.
xxx stands for the firmware version: e.g. xxx = 121 signifies Version V1.21. The file contains the software necessary for loading the firware from the PC to the converter as well as the firmware itself.
You will find the latest version of the firmware on the Internet at http://www.ad.siemens.de/ld/html_00/custosup/html_00/ds_update.htm

Copy the compressed file "Mc_vxxx.exe" or "Mcp_vxxx.exe", which you have received by e-mail or downloaded from the Internet, to your hard disk, e.g. to c:\mcboot. Call the file with the command Mc_vxxx or Mcp_vxxx. The following files will then be unpacked from Mc_xxx.exe:
bsl. exe, bslmc.bat, bslmc.cfg, bslmc.bin, Readmemc.doc, Tech.pdf, Teche.pdf and mc_vxxx.b86.
The following files will then be unpacked from Mcp_xxx.exe:
bsl. exe, bslmcp.bat, bslmcp.cfg, bslmc.bin, Readmemc.doc, Tech.pdf, Teche.pdf und mcp_vxxx.b86.
After unpacking, the files are available in directory c:\mcboot.
If necessary, the PC interface and the baud rate can be changed in file bslmc.cfg or bslmcp.cfg. The default settings are COM1 and 57600 baud.

Switch OFF the 24 V power supply at the converter. Use the above-mentioned connecting cable to connect the COM port of the PC with plug connector X103 in the case of Compact PLUS units, or X300 in the case of Compact and chassis units. Switch ON the 24 V power supply at the converter.
If the connecting cable is making proper contact at the ports, the PMU (seven-segment display on the converter) will remain dark in the case of Compact PLUS units, or an "E" will appear on the PMU in the case of Compact and chassis units.

Now start the boot procedure by calling from directory C: batch file bslmcp in the case of Compact PLUS units, or bslmc in the case of Compact and chassis units.
The flash memory is erased. During the correct boot procedure, the number "8" appears on the PMU in the case of Compact PLUS units, or an "E" in the case of Compact and chassis units. In the DOS window on the PC screen appears a number that constantly counts upwards.
Wait until the DOS prompt appears again in the DOS window. It takes about 2 to 3 minutes, depending on microprocessor performance.
The converters are initialized automatically at the end of the boot procedure, i.e. the parameters are counted up at the PMU.

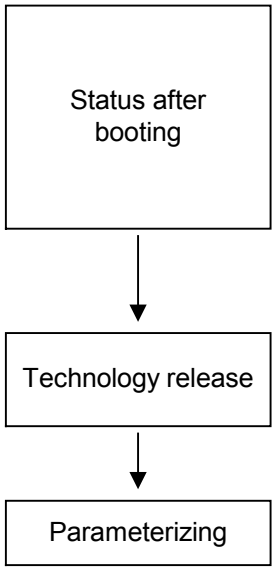

If the parameter structure between the firmware status before booting and the new firmware has not changed, then the units retain the same operating status (e.g. °009 ready for operation) and the parameterization (see below) as before.
Otherwise, after booting Compact PLUS units go to status °005 drive setting, and Compact and chassis units go to status °000 power section definition.
The software version can be read in parameter r069.1, and the extended software identifier in parameter r828.1.

Further information concerning the technology functions (synchronism and positioning) is to be found in the files Tech.pdf (German) and Teche.pdf (English). These files can be read only with the Acrobat Reader program.

After removing the cable, you can make a start with parameterizing.

8 Communication

A differentiated communication concept makes it possible to use the correct communication medium for a specific requirement. The following communication interfaces are available:

- Integrated serial interface(s) with USS protocol for parameterization, operator control and visualization of the units with OP1S or PC
- Optional boards for various field bus interfaces (e.g. PROFIBUS DP) for integration into the automation
- Optional board for connecting up SIMOLINK for fast synchronous data transfer between technologically connected drives (e.g. angular synchronism).

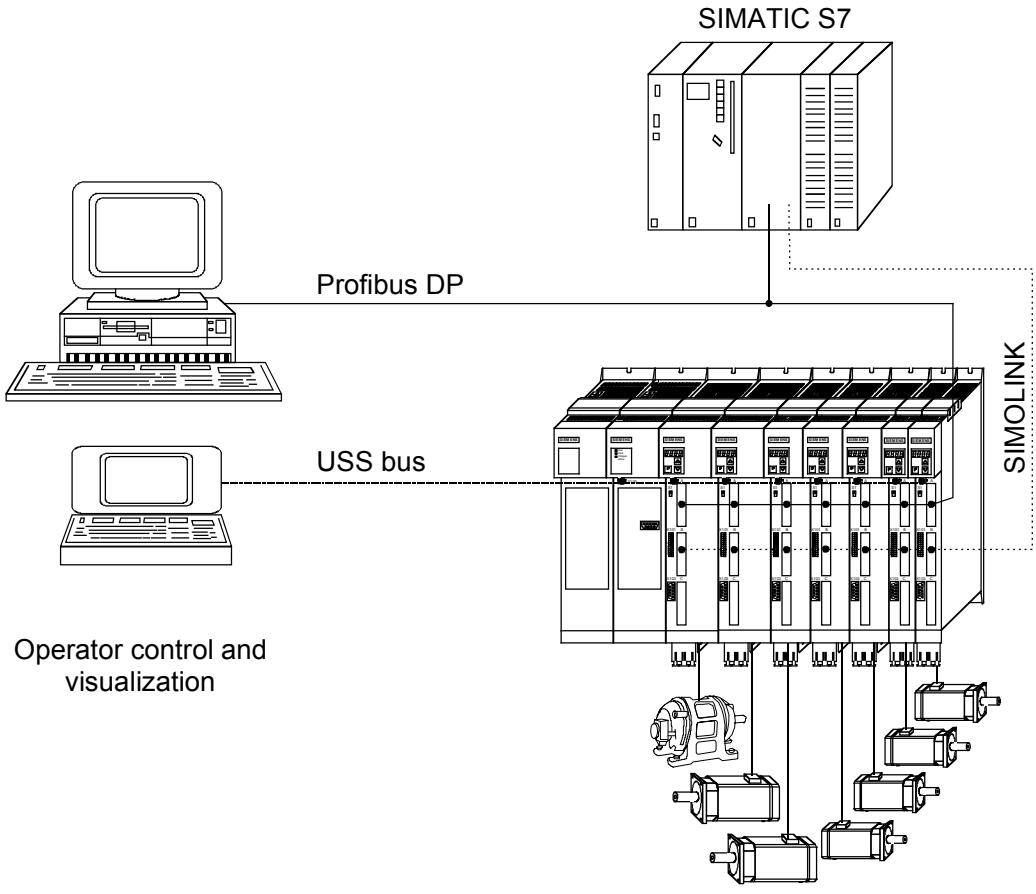

Fig. 8-1 Overview for communication

8.1 Universal Serial Interface (USS)

Introduction

This documentation describes the application of the Universal Serial Interface Protocol (USS) for SIMOVERT MASTERDRIVES MC and VC.

NOTE

The USS protocol is a simple serial data transfer protocol, defined by Siemens AG, which is fully tailored to the requirements of drive technology. A detailed description of the protocol specifications, the physical interface, the bus structure as well as a definition of the transferred net data for drive applications are documented in the specification "Universal serial interface protocol USS® protocol" (Order No. E20125-D0001-S302-A1).

Using the USS protocol, a user can establish a serial bus link between a higher-level master system and several slave systems. Master systems can be, for example, PLCs or PCs. SIMOVERT MASTERDRIVES drive converters are always the slaves on the bus system. Furthermore, SIMOVERT MicroMaster, SIMOVERT P 6SE21 and 6RA23 and 6RA24 drive converters can be operated as slaves on the USS bus.

The USS protocol allows the user to implement both automation tasks with cyclical telegram traffic (⇒ a fixed telegram length is necessary) as well as visualization tasks. In this case, the protocol with variable telegram length is advantageous, as texts and parameter descriptions can be transferred in one telegram without chopping up the information.

8.1.1 Protocol specification and bus structure

Features

The USS protocol has the following significant features:

- Supports a multi-point-capable link, e.g. EIA RS 485 hardware or a point-to-point link, e.g. EIA RS 232.
- Master-slave access technique
- Single-master system
- Maximum 32 nodes (max. 31 slaves)
- Operation with variable or fixed telegram length
- Simple, reliable telegram frames
- The same bus mode of operation as with the PROFIBUS (DIN 19245 Part 1)
- Data interface to the basic unit according to PROFILE variable-speed drives. This means that, when the USS is being used, information is transferred to the drive in the same way as with the PROFIBUS-DP.
- Can be used for start-up, service and automation
- PC-based service tools (e.g. SIMOVIS/DriveMonitor) for SIMOREG and SIMOVERT
- Can be easily implemented in customized systems

8.1.1.1 Protocol specification

Introduction

The USS protocol defines an access technique according to the master-slave principle for communications via a serial bus. The point-to-point link is included as a sub-quantity.

One master and a maximum of 31 slaves can be connected to the bus. The individual slaves are selected by the master using an address character in the telegram. A slave can never transmit without first being initiated by the master so that direct information transfer between individual slaves is not possible. Communication takes place in the half-duplex mode.

The master function cannot be transferred (single-master system).

The following illustration shows a bus configuration using drive technology as an example.

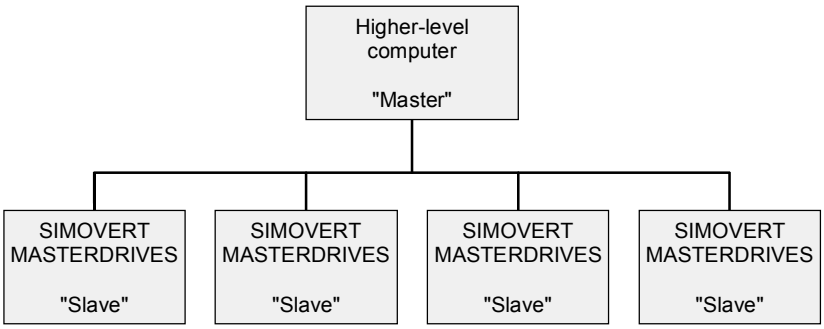

Fig. 8.1-1 Serial linking of SIMOREG/SIMOVERT drive converter (slaves) with a higher-level computer as the master

Telegram structure

Each telegram begins with the start character STX (= 02 hex), followed by the length information (LGE) and the address byte (ADR). The net characters then follow. The telegram is terminated by the BCC (Block Check Character).

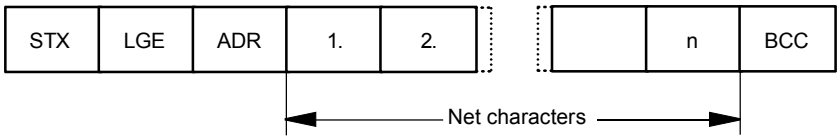

Fig. 8.1-2 Telegram structure

For single-word data (16 bit) in the net data block (= net character block), the high byte (first character) is always sent and then the low byte (second character). The same applies to double-word data: the high word is sent first followed by the low word.

The protocol does not identify tasks in the net characters. The contents of the net data for SIMOVERT MASTERDRIVES drive converters is dealt with in Section 8.1.3.

Data coding

Information is coded as follows:

- STX (start of text)
  ASCII characters: 02 hexadecimal
- LGE (telegram length)
  1 byte, contains the telegram length
- ADR (address byte)
  1 byte, contains the slave address and the telegram type (binary coded)
- Net characters
  Each one byte, contents are task-dependent
- BCC
  1 byte, Block Check Character

Assigning the address byte (ADR)

In the address byte, information other than the node number is coded: The individual bits in the address byte are assigned as follows:

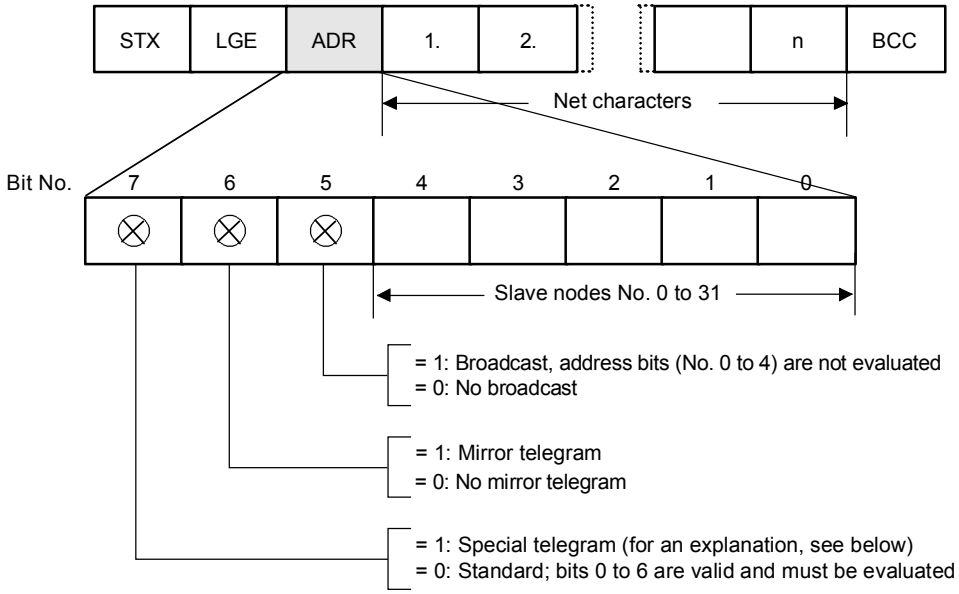

Fig. 8.1-3 Assignment of the address byte (ADR)

Data transfer procedure

The master ensures cyclical telegram data transfer. The master addresses all of the slave nodes one after the other with a task telegram. The addressed nodes respond with a reply telegram. In accordance with the master-slave procedure, the slave, after receiving the task telegram, must send the reply telegram to the master before the master can address the next slave node.

Handling data transfer

The sequence of the addressed slave nodes can be specified, for example, by entering the node numbers (ADR) in a circulating list (polling list) in the master. If it is necessary to address several slaves in a faster cycle than the other slaves, their node number can occur several times in the circulating list. A point-to-point link can be implemented by means of the circulating list, in which case only one node is entered into the circulating list.

Example of configuration

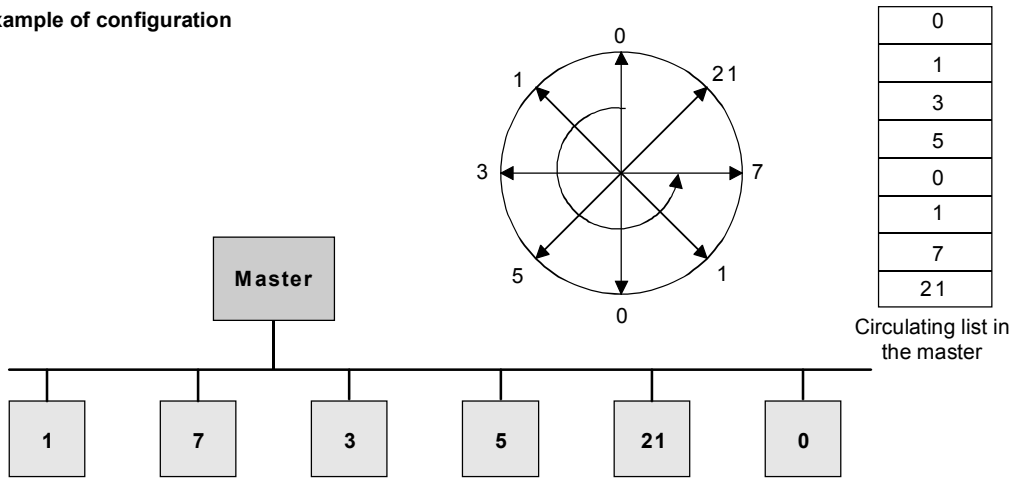

SIMOVERT MASTERDRIVES with the addresses 0, 1, 3, 5, 7 and 21
Nodes 0 and 1 are signalled twice as often as others

Fig. 8.1-4 Circulating list

Cycle time

The length of a cycle time is determined by the time needed for the sequential occurrence of data exchange with the individual nodes.

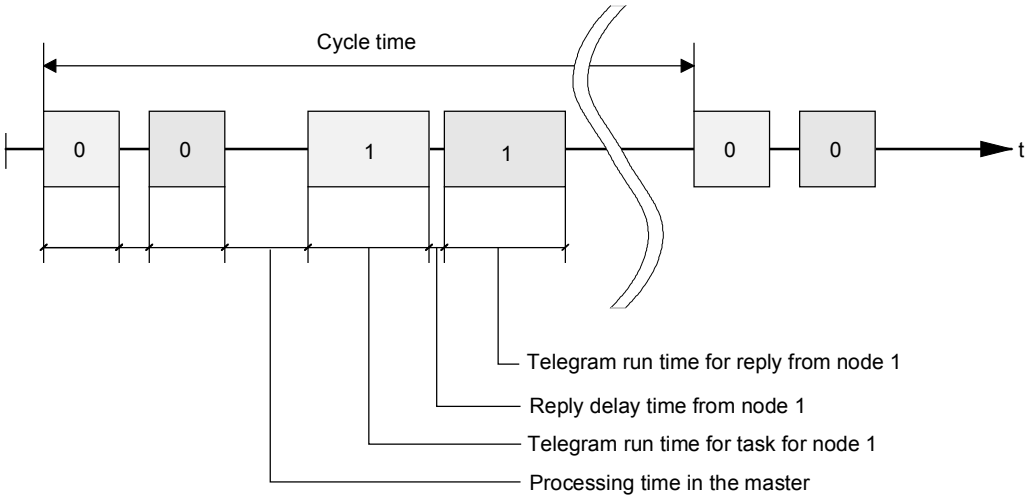

Fig. 8.1-5 Cycle time

Due to inconstant reply delay and processing times, the cycle time is not fixed.

Start interval

The STX start character (= 02 hexadecimal) by itself is not sufficient for the slaves to clearly identify the start of a telegram because the bit combination 02/hexadecimal can also occur in the net characters. For this reason, a no-character start interval of at least 2 character run-times before the STX is specified for the master. The start interval is part of the task telegram.

Baud rate in bit/s	Start interval in ms
9600	2,30 ms
19200	1,15 ms
38400	0,58 ms
76800	0,29 ms
93750	0,23 ms
187500	0,12 ms

Table 8.1-1 Minimum start intervals for various baud rates

Only an STX with a preceding start interval identifies the valid start of a telegram.

Data is always transferred in accordance with the diagram illustrated below (half-duplex mode):

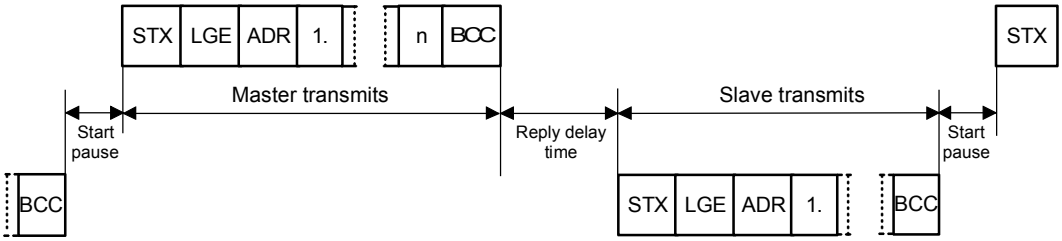

Fig. 8.1-6 Transmit sequence

Reply delay time

The time interval between the last character of the task telegram (BCC) and the start of the reply telegram (STX) is known as the **reply delay time**. The maximum permissible reply delay time is **20 ms, but it must not be less than the start interval**. If node x does not respond within the maximum permissible reply delay time, an error message is deposited in the master.
The master than sends the telegram for the next slave node.

8.1.1.2 Bus structure

The data transfer medium and the physical bus interface are essentially determined by what the bus system is used for.

The physical interface of the USS protocol is based on the "Recommended Standard RS-485". For point-to-point links, a sub-quantity of EIA RS-232 (CCITT V.24), TTY (20 mA current loop) or fiber-optic cables can be used as the physical interface.

The interfaces for SIMOVERT MASTERDRIVES are always RS 485 with 2-wire cable.

Exception: Either RS 485 or RS 232 can be connected at the 9-pin SUB D socket connector on the PMU (operator control and parameterizing unit) of the basic units.

NOTICE

This section describes how a USS field bus has to be structured in order to ensure reliable data transfer via the transfer medium in standard applications. Under special conditions of use, additional factors must be taken into account which require further measures or restrictions that are not described in this document.

Topology

The USS bus is based on a linear topology without branches.

Both ends of the line terminate at a node.

The maximum cable length and therefore the maximum distance between the master and the last slave is limited by the characteristics of the cable, the ambient conditions and the data transfer rate. With a data transfer rate of < 100 kbit/s, a maximum length of 1200 m is possible.

The number of nodes is limited to a maximum of 33 (1 master, 32 slaves).

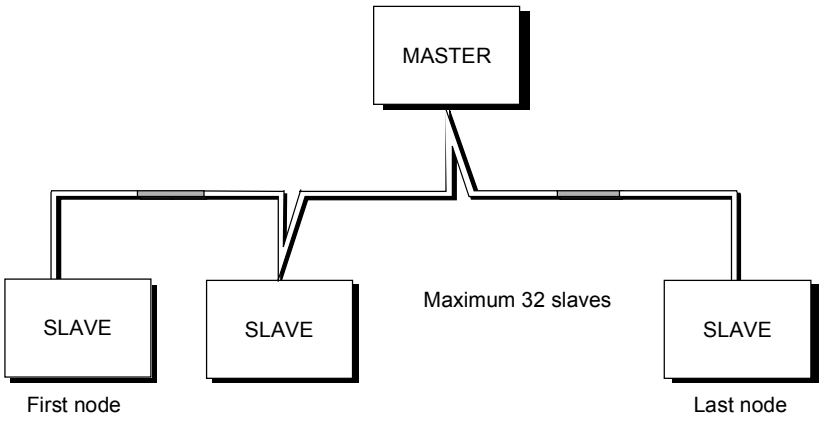

Fig. 8.1-7 USS bus topology

The two ends of a bus line (first node and last node) must be terminated with bus terminating networks.
Point-to-point connections are handled just like bus connections. One node has the master function and the other has the slave function.

Data transfer technology

Data is transferred in accordance with Standard EIA 485. RS 232 can be used for point-to-point links. Data transfer is always half-duplex – i.e. alternating between transmitting and receiving – and it must be controlled by the software. The half-duplex technique allows the same cables to be used for both data-transfer directions. This permits simple and inexpensive bus cabling, operation in environments subject to interference and a high data transfer rate.

Cable characteristics

A shielded, twisted two-wire cable is used as the bus cable.

Conductor diameter ∅	$2 \times \approx 0{,}5\ mm^2$
Conductor	≥ 16 x ≤ 0,2 mm
Lay ratio	≥ 20 twists / m
Overall shield	Braided, tin-plated copper wire, diameter ∅ ≥ $1{,}1\ mm^2$ 85 % optical coverage
Overall diameter∅	≥ 5 mm
External sheath	Depending on the requirements regarding flame retardation, deposits after burning etc.

Table 8.1-2 Structural data

NOTE

All information should only be considered as a recommendation. Deviations or different measures may be required depending on the particular requirements, the specific application and the conditions on site.

Thermal and electrical characteristics

Cable resistance (20°C)	≤ 40 Ω/km
Insulation resistance (20°C)	≥ 200 MΩ/km
Operating voltage (20°C)	≥ 300 V
Test voltage (20°C)	≥ 1500 V
Temperature range	-40 °C ≤ T ≥ 80 °C
Load capability	≥ 5 A
Capacitance	≤ 120 pF/m

Table 8.1-3 Thermal and electrical characteristics

Mechanical characteristics

Single bending: ≤ 5 x outer diameter
Repeated bending: ≤ 20 x outer diameter

Recommendations

1. Standard, without any special requirements:
Two-core, flexible, shielded conductor in accordance with VDE 0812, with colored PVC sheath.
PVC insulation resistant to oil and petroleum products.

- Type: LIYCY 2 x 0,5 mm^2
  e.g. Metrofunk Kabel-Union GmbH
  Postfach 41 01 09, 12111 Berlin
  Tel 030-831 40 52, Fax: 030-792 53 43

2. Halogen-free cable (no hydrochloric acid is generated when the cable burns):
Halogen-free, highly flexible, resistant to extreme heat and cold.
Sheath manufactured from a special ASS silicon-based composite.

- Type: ASS 1 x 2 x 0,5 mm^2
  e.g. Metrofunk Kabel-Union GmbH
  Postfach 41 01 09, 12111 Berlin
  Tel 030-831 40 52, Fax: 030-792 53 43

3. Recommended if halogen-free and silicon-free cables are required:

- Type: BETAflam G-M/G-G-B1 flex. 2 x 0,5 mm^2
  e.g. Studer-Kabel-AG, CH 4658 Däniken

Cable lengths

The cable length is dependent on the data transfer rate and the number of connected nodes. The following cable lengths are possible given the specified cable characteristics:

Data transfer rate	Max. number of nodes	Max. cable length
9.6 kbit/s	32	1200 m
19.2 kbit/s	32	1200 m
93.75 kbit/s	32	1200 m
187.5 kbit/s	30	1000 m

Table 8.1-4 Cable lengths

8.1.2 The structure of net data

Information which, for example, a SIMATIC S5 control unit (= master) sends to a drive (= slave) or the drive sends to the control unit is placed in the net-data area of each telegram.

8.1.2.1 General structure of the net-data block

Introduction

The net-data block is divided into two areas:

- the PKW (parameter ID value) range
- the PZD (process data) range

Telegram structure

The structure of the net data in the USS-protocol telegram is shown below.

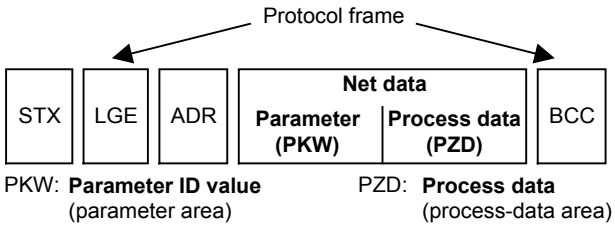

- The **PKW area** relates to the handling of the parameter ID value (PKW) interface. The PKW interface is not a physical interface but a mechanism which handles parameter transfer between two communication partners (e.g. control unit and drive). This involves, for example, reading and writing parameter values and reading parameter descriptions and associated texts.
  All tasks which are performed via the PKW interface essentially involve operator control and visualization, service and diagnosis.
- The **PZD area** contains the signals required for the **automation** system:
  - Control word(s) and setpoint(s) from the master to the slave
  - Status word(s) and actual value(s) from the slave to the master.

Structure of the PKW and PZD areas

PKW area			PZD area		
PKE	IND	PKW elements	PZD1	• • •	PZD16
Variable length			Variable length		

The two areas together make up the net data block. This structure applies to telegrams from the master to the slave and vice versa.

8.1.2.2 PKW area

With the help of the PKW mechanism, the following tasks can be performed via any serial interface with the USS protocol:

- Reading and writing parameters in the basic unit and, if available, parameters on a technology board, e.g. T100
- Reading the description of a parameter (applies to parameters of the basic unit and of technology boards)
- Reading of texts assigned to the indices of an indexed parameter. (Applies to parameters of the basic unit and of the technology modules.)
- Reading of texts assigned to the values of a parameter. (Applies to parameters of the basic unit and of the technology modules.)

Settings in the PKW area

The PKW area can be varied. Depending on the particular requirement, **3-word, 4-word or variable word lengths** can be parameterized.

PKW area parameterized for 3 words

The following is an example of a structure when access (write/read) is made to **single-word** (16 bit) parameter values:

1st word	2nd word	3rd word
PKE	IND	PWE1
Parameter ID	**Index**	**Parameter value 1**

The PKW area must be permanently set to 3 words at the master and the slave. This setting is made during start-up and should not be altered any more during bus operation.

PKW area parameterized to 4 words

The following is an example of a structure when access (write/read) is made to **double-word** (32 bit) parameter values:

1st word	2nd word	3rd word	4th word
PKE	IND	PWE1	PWE2
		High-Word	Low Word
Parameter ID	**Index**	**Parameter value (double word)**	

Parameterization to a fixed length of 4 words applies to telegrams from the master to the slave and from the slave to the master. The setting must be made both at the master and at the slave and can no longer be altered during bus operation.

PKW area parameterized with variable word length

1st word	2nd word	3rd word	4th word		(m+2) word
PKE	IND	PWE1	PWE2	• • •	PWEm

With:

- 1 word ≤ m ≤ 110 words (maximum) when 16 PZD words (maximum) are contained in the net data block.
- 1 word ≤ m ≤ 126 words (maximum) when there is no PZD.

Telegram data transfer with variable telegram length means that the slave responds to a telegram from the master with a telegram whose length does not have to be the same length as the telegram from the master to the slave. The length of elements PEW 1 to PWE m in the reply telegram and what is contained in them depends on the task issued by the master. Variable length means that only the number of words necessary to pass on the appropriate information is transferred. The minimum length, however. is always 3 words.

If a slave, for example, transfers a parameter value which is a 16-bit quantity (e.g. the output voltage in parameter r003), then only 3 words of the PKW area are sent in the telegram from the slave to the master. With regard to the MASTERDRIVES MC/VC for example, if the current speed (parameter r002) is to be read, the PKW area in the telegram from the slave to the master is 4 words long since the speed is stored as a 32-bit quantity in parameter r002. Variable word-length parameterization is mandatory if, for example, all values are to be read at once from an "indexed" parameter or if the parameter description of a parameter is to be partially or completely read. This setting to variable word-length is made during start-up.

NOTICE

Do not use a variable word length if a SIMATIC S5 or SIMATIC S7 is the master.

Structure of the parameter area (PKW)

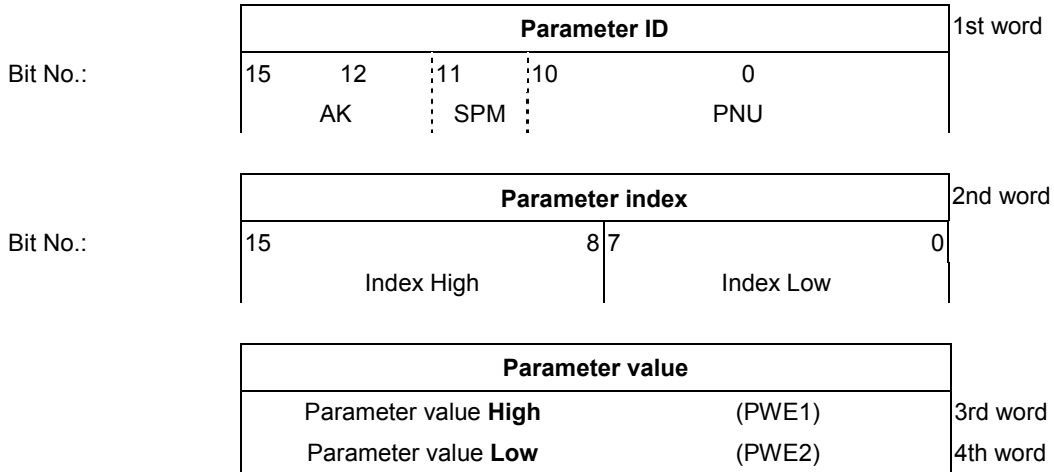

AK: Task or reply ID

SPM: Toggle bit for processing of parameter-change reports

PNU: Parameter number

NOTE

The PKW area is transferred in increasing order, always starting with the 1st word.

Parameter ID (PKE), 1st word

The parameter ID (PKE) is always one word (16-bit quantity).

Bits 0 to 10 (PNU), together with bit 15 of the parameter index, make up the number of the desired parameter (see parameter list).

Number	PKE: Bits 0 to 10 (PNU)	Index: Bit 15	
1 - 999	1 - 999	0	Basic unit
2000 - 2999	0 - 999	1	Basic unit
1000 - 1999	1000 - 1999	0	Technology module
3000 - 3999	1000 - 1999	1	Technology module

Bit 11 (SPM) is the toggle for parameter-change reports.
MASTERDRIVES do not support parameter change reports.

Bits 12 to 15 (AK) contain the task or reply ID.

The **task IDs** are sent in the telegram from the master to the slave. The meaning of the IDs is given in Table 8.1-5. Correspondingly, the **reply IDs** are transferred at this position in the telegram from the slave to the master (see Table 8.1-6). Depending on the task ID, only certain reply IDs are possible. If the reply ID is 7 (task cannot be executed), then an error number is entered in parameter value 2 (PWE2). The error numbers are shown in Table 8.1-7.

Task ID	Meaning	Reply ID	
		positive	negative
0	No task	0	7 or 8
1	Request parameter value	1 or 2	↑
2	Change parameter value (word)	1	|
3	Change parameter value (double word)	2	|
4	Request descriptive element [1]	3	|
6	Request parameter value (array)[1]	4 or 5	|
7	Change parameter value (array, word)[2]	4	|
8	Change parameter value (array, double word)[2]	5	|
9	Request the number of array elements	6	|
10	Reserved	-	|
11	Change parameter value (array, double word) and save in EEPROM [2]	5	|
12	Change parameter value (array, word) and save in EEPROM [2]	4	|
13	Change parameter value (double word) and save in EEPROM	2	|
14	Change parameter value (word) and save in EEPROM	1	↓
15	Read or change text (only supported via OP or SIMOVIS/DriveMonitor)	15	7 or 8

[1] The required element of the parameter description is specified in IND (2nd word)
[2] The required element of the indexed parameter is specified in IND (2nd word)

Table 8.1-5 Task IDs (master -> drive converter)

Reply ID	Meaning
0	No reply
1	Transfer parameter value (word)
2	Transfer parameter value (double word)
3	Transfer descriptive element [1]
4	Transfer parameter value (array, word) [2]
5	Transfer parameter value (array, double word) [2]
6	Transfer the number of array elements
7	Task cannot be executed (with error number)
8	No control/change rights for the PKW interface
9	Parameter change report (word)
10	Parameter change report (double word)
11	Parameter change report (array, word) [2]
12	Parameter change report (array, double word) [2]
13	Reserved
14	Reserved
15	Transfer text

* For table footnotes [1] and [2], see Table 8.1-5

Table 8.1-6 Reply IDs (drive converter -> master)

Example

Source for the ON/OFF1 command (control word1, bit 0):
P554 (=22A hex) Change parameter value (array, word) and save in the EEPROM.

	Parameter ID (PKE)				1st word
Bit No.:	15 12	11	10 0		
	AK	SPM	PNU		
	1 1 0 0	0	0 1 0	0 0 1 0	1 0 1 0	Binary value
	C	2	2	A	HEX value

- Bits 12 to 15: Value = 12 (= "C" hex); change parameter value (array, word) and save in the EEPROM
- Bits 0 to 11: Value = 554 (= "22A" hex); parameter number with a set change-report bit

Error numbers for reply "Task cannot be executed"

No.	Meaning
0	Inadmissible legal parameter number (PNU); if PNU is not available
1	Parameter value cannot be changed; if the parameter is a visualization parameter
2	Lower or upper limit exceeded
3	Erroneous sub-index
4	No array
5	Incorrect type of data
6	Setting not permitted (can only be reset)
7	Descriptive element cannot be changed; not possible
11	No operator control rights
12	Key word missing; Drive converter parameter: 'Access Key' and/or 'Parameter Special Access' not correctly set
15	No text array available
17	Task cannot be executed due to operating status; drive converter status does not permit the set task at the moment
101	Parameter number deactivated at the moment; Parameter has no function in the present state of the drive converter (e.g. type of closed-loop control)
102	Channel width too small; only for short channels The parameterized length of the PKW area is too large due to internal limitations of the drive converter. This error message can occur with the USS protocol on the T100 technology board only if access is made to parameters of the basic unit from this interface.
103	Number of PKWs incorrect; only for G-SCom 1/2 and SCB interface (USS); The error number is transferred in the following two cases: • if the task concerns all the indices of an indexed parameter (task index equal to 255) or the whole parameter description is requested and a variable telegram length has not been parameterized. • if the parameterized number of PKWs (process-data items) in the telegram is too small for the set task (e.g. alteration from the double word and the number of PKWs is 3 (words).
104	Parameter value not permissible; This error number is transferred if the parameter value which is to be transferred does not have an assigned function in the drive converter or cannot be accepted at the instant of the change for internal reasons (although it lies within the limits).
105	The parameter has been indexed e.g. task 'PWE change word' for indexed parameter
106	Task not implemented

Table 8.1-7 Error numbers for the reply ID "Task cannot be executed"

Example Error message 104

The parameter 'SCom/SCB PKW #" P702:

- Minimum value: 0 (0 words)
- Maximum value: 127 (corresponds to: variable length)
- Permissible values for USS: 0, 3, 4 and 127.

If a change task with a PWE which is not 0, 3, 4 or 127 is issued to the drive converter, the reply is "Task cannot be executed" with error value 104.

Parameter index (IND) 2nd word

The low-part of the index (bit 0 to 7), depending on the task, describes a definite element:

- desired array element in the case of indexed parameters,
- desired element of the parameter description,
- for indexed parameters with "index text": desired index text,
- for non-indexed parameters with "selection text": desired selection text.

Bits 8 to 14 must as a general rule all be equal to 0. The only exceptions are those parameters that are indexed and possess "selection texts". In this case bit 9 must be set to 1 to clearly identify the desired text type. The low-part then defines the desires "selection text".

Bit 15, together with bits 0 to 10 in the PKE, serves to constitute the number of a parameters (see Parameter coding).

Special significance of index value 255 (low-part)

With regard to the task "Request (parameter element) descriptive element" (= AK 4) or tasks relating to the reading/writing of indexed parameters (= arrays), index value 255 has a special significance:

Task ID	Meaning
4	The complete (parameter) description is requested
6	Request all values of the indexed parameter This task can generate error message 102.
7, 8, 11 or 12	All values of the indexed parameter are to be changed. These tasks can generate error message 102.

Table 8.1-8 Tasks with index value 255

Example
Parameter index

Source for ON/OFF1 command (control word 1, bit 0): P554 (= 22A hex)
Change parameter value of index 1.

	Parameter index				2nd word
Bit No.:	15 8		7 0		
	0	0	0	1	HEX value

Bit 0 to 7: Index or number of the descriptive element
Bit 8 to 14: 0
Bit 15: 0

Parameter value (PWE) 3rd and 4th words

Depending on the word length parameterization of the PKW area, the parameter value (PWE) is transferred as word or double word (32 bit). Only one parameter value can be transferred in a telegram.

If the word length of the PKW area is parameterized with 3 words, then only 16 bit parameters can be transferred. Parameter description elements larger than 16 bit and texts cannot be transferred.

If the word length of the PKW area is parameterized with 4 words, then 16 and 32 bit parameters can be transferred. Parameter description elements larger than 32 bit and texts cannot be transferred.

If the word length of the PKW area is parameterized with "Variable length" (127), then 16 and 32 bit parameters can be transferred. Parameter description elements and texts can also be transferred. Furthermore, all elements of an indexed parameter can be read or changed as a single task and the whole parameter description can be called (index value: low-part = 255).

Transfer of a 16-bit parameter value:

1. PKW area, fixed, 3 words:
   PWE1 contains the value
2. PKW area, fixed, 4 words:
   PWE2 (least significant word, 4th word) contains the value; PWE1 is set to 0.
3. PKW area, variable:
   PWE1 contains the value. There is no PWE2 or higher!

Transfer of one 32-bit parameter value:

1. PKW area, fixed, 3 words:
   Task is rejected with error message 103.
2. PKW area, fixed, 4 words:
   PWE1 (most significant word; 3rd word) contains the high-word of the double word
   PWE2 (least significant word; 4th word) contains the low-word of the double word.
3. PKW area, variable:
   As 2.; There is no PWE3 or higher!

Example
Parameter value

Source for the ON/OFF1 command (control word 1, bit 0): P554 (= 22A hex)
Change parameter value of index 1 to the value 2100 (hex).

	Parameter value				
Bit No.:	31 24		23 16		3rd word, PWE1 (hex)
	0	0	0	0	
Bit No.:	15 8		7 0		4th word, PWE2 (hex)
	2	1	0	0	

Bit 0 to 15: Parameter value for 16-bit parameter or low component for 32-bit parameter
Bit 16 to 31: Value = 0 for 16-bit parameter or high component for 32-bit parameter

8.1.2.3 Process-data area (PZD)

In this area, process data are **continually** exchanged between the master and slaves. The process data to be exchanged with a slave is configured at the start of communications. The setpoint for the current is to be transferred to slave x in the second PZD (= PZD2), for example. This setting is fixed for the whole procedure of data transfer.

PZD1-PZD16 = Process data
(= control / status word(s) and setpoint(s) / actual value(s))

The control/status word(s), setpoint(s) and actual value(s) required for the automation system are transferred in this area.

The length of the PZD area is determined by the number of PZD elements and their size (e.g. word, double word). In contrast to the PKW area, which can be variable, the length of this area (master and slaves) must always be agreed on between the communication partners. The maximum number of PZD words per telegram is limited to 16 words. If only PKW data is to be transferred in the net data block, the number of PZDs may even be 0!

In PZD1, control word 1 or status word 1 is always transferred, depending on the direction of data transfer and, in PZD2, the main setpoint or the main actual value is always transferred, again depending on the direction of data transfer. In the subsequent process data areas PZD3 to PZDn, additional setpoints and actual values are sent. For SIMOVERT MASTERDRIVES, control word 2 or status word 2, if necessary, is transferred in PZD4.

Structure of the PZD area

1 word	1 word	1 word		1 word
PZD1	PZD2	PZD3	• • •	PZD16

Maximum 16 words
Minimum 0 words, i.e. no PZD area in the net data block

NOTE

PZDn is always transferred before PZDn+1 on the USS bus.

Task telegram (master ⇒ slave)

PZD1	PZD2 / PZD3	PZD4	PZD5 ... PZD16
Control word 1	Setpoint (32 Bit) / Setpoints (16 Bit)	Setpoint / Control word 2	Setpoints

Reply telegram (slave ⇒ master)

PZD1	PZD2 / PZD3	PZD4	PZD5 ... PZD16
Status word 1	Main actual value 1)	Actual values 1) / Status word 2	Actual values

1) Setpoint/actual value assignments are freely selectable, which means, for example, that the speed setpoint can be given in the task telegram in the PZD2, while the actual speed value can be returned in the reply telegram in the PZD2 (technologically useful). Or another actual value can be returned, such as actual torque value, actual position value or actual current value.

8.1.3 Interface overview

The following section describes all of the presently available SIMOVERT MASTERDRIVES MC/VC interfaces which use the USS protocol.

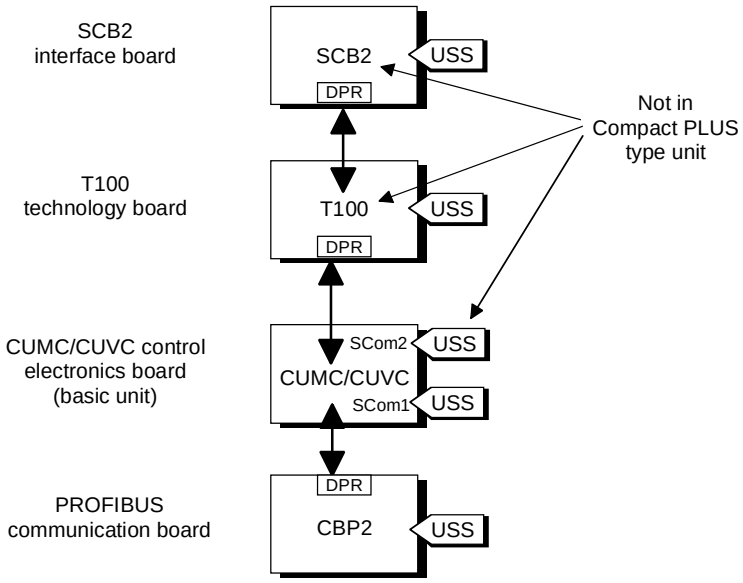

Fig. 8.1-8 Interface overview

Basic unit with CUMC/CUVC/CUVP

In the SIMOVERT MASTERDRIVES MC series, the control electronics board, CUMC (Control Unit Motion Control) or CUVC (Control Unit Vector Control), is used. Depending on the type of basic unit, it has at least one serial interface with the USS protocol. The following table shows the available interfaces:

Board	Number of interfaces	Physical interface	Baud rate [kBit/s]
CUMC in Compact PLUS unit	1 interface with USS protocol Designation: SCom1	RS485 / 2-wire at terminal strip X100 or RS232 or RS485 / 2-wire at 9-pole SUB-D socket X103	max. 38.4
CUMC in Compact and chassis type unit	2 interfaces with USS protocol Designation: SCom1 and SCom2	RS485 / 2-wire on terminal strip X103 (SCom1 and SCom2) or RS232 or RS485 / 2-wire at 9-pole SUB-D socket X300 (SCom1)	max. 38.4
CUVC in Compact and chassis type unit	2 interfaces with USS protocol Designation: SCom1 and SCom2	RS485 / 2-wire on terminal strip X101 (SCom2) and RS232 or RS485 / 2-wire at 9-pole SUB-D socket X300 (SCom1)	max. 38.4
CUVP in Compact PLUS unit	2 interfaces with USS protocol Designation: SCom1 and SCom2	RS485 / 2-wire on terminal strip X100 (SCom2) and RS232 or RS485 / 2-wire at 9-pole SUB-D socket X103	max. 38.4

Table 8.1-9 Interfaces on the CU board

NOTICE

All the interfaces on the CU boards are non floating (not electrically isolated).

SCB 2 supplementary board

The SCB2 (Serial Communications Board) is an expansion board of the SIMOVERT MASTERDRIVES. The board has a floating RS485 interface. Either the peer-to-peer protocol or the USS protocol can be used at this interface.

NOTE

The supplementary SCB2 board cannot be built into the Compact PLUS type of unit.

Board	Number of interfaces	Physical interface
SCB2	1 interface with USS protocol	RS485 / 2-wire at terminal strip X128

Table 8.1-10 Interface on the SCB 2 board

NOTE

For a more detailed description of the SCB 2, refer to the instruction manual, "Serial Communication Board 2"
(Order No.: 6SE7087-6CX84-0BD0).

T100 technology board

The T100 technology board is an expansion board of the SIMOVERT MASTERDRIVES. The board has two, non-floating RS485 interfaces. One interface is permanently provided for the peer-to-peer protocol, the other is for the USS protocol.

NOTE

The T100 technology board cannot be built into the Compact PLUS type of unit.

Board	Number of interfaces	Physical interface
T100	1 interface with USS protocol and 1 interface for peer-to-peer linking	RS485 / 2-wire at terminal strip X132

Table 8.1-11 Interfaces on the T100 board

NOTE

For a more detailed description of the T100, refer to the instruction manual "Technology Board T100" [Order No. 6SE7080-0CX87-0BB0, (hardware) and 6SE7080-0CX84-0BB0 (software)].

CBP2 supplementary board

The CBP2 interface board (Communication Board PROFIBUS 2) is an extension board of the SIMOVERT MASTERDRIVES. The board has a floating RS485 interface. For this interface, either the PROFIBUS protocol or the USS protocol can be used.

Board	Number of interfaces	Physical interface
CBP2	1 interface with USS protocol	RS485 / 2-wire at terminal strip X448

Table 8.1-12 Interface on the CBP2 board

NOTE

A more detailed description of the CBP2 can be found in the operating instructions "CBP/CBP2 - Communication Board PROFIBUS" (Order No.: 6SE7087-6NX84-0FF0).

8.1.4 Connecting-up

DANGER

- The equipment is operated at high voltages. They must be in a no-voltage condition (off load) during all connecting work!
- When work is being done on the unit, it must be in a no-load condition, i.e. it must be disconnected and locked-out from the line supply.
- Only appropriately qualified personnel may work on or with the equipment.
- Death, severe bodily injury or considerable material damage may result if this warning is not complied with.
- Due to the DC link capacitors, there are still hazardous voltage levels in the equipment for at least 5 minutes after it has been disconnected from supply. There must therefore be a delay of at least 5 minutes before the unit is opened.
- The power terminals and the control terminals can still carry hazardous voltage even when the motor has been shut down.

8.1.4.1 Bus cable connection

On SIMOVERT MASTERDRIVES, connection of the USS bus cable depends on the control version and, in the case of MC units, it is dependent on the respective type of construction.

MC, VC, "Compact PLUS" type

With the "Compact PLUS" type of unit, either terminal strip X100 or connector X103 can be used to connect up the USS bus cable. The exact pin assignment is given in the relevant operating instructions for the basic unit.

MC, "Compact type" and "chassis type"

With "Compact type" and "chassis type" units, the SCom1 and SCom2 interfaces can be operated at the same time on terminal strip X103 with the USS protocol. Alternatively, connector X300 can be used as SCom1. The exact pin assignment of terminal strip X103 or connector X300 is given in the relevant operating instructions of the basic unit.

VC, "Compact type" and "chassis type"

In the case of the "Compact type" and "chassis type" units, either the connection of terminal strip X101 (SCom2) or X300 (SCom1) can be used to connect up the USS bus cable. The exact pin assignment of terminal strip X101 or connector X300 is given in the relevant operating instructions of the basic unit.

SCB 2 board

In the case of the SCB2 board, the bus cable is terminated at terminal strip X128. The exact pin assignment and other notes on termination are given in the operating instructions for the SCB2.

Technology board T100

In the case of the T100 technology board, the USS protocol is implemented at interface 1. The bus cable is terminated at terminal strip X132. The exact pin assignment and other notes on termination are given in the hardware operating instructions for the T100.

8.1.4.2 Fitting the bus cable

At all interfaces to the CUMC, CUVC control electronics, the SCB2 board and the T100, except for connectors X103 and X300 or X448 (9-pin SUB-D connectors), the USS bus cable is connected by means of screw/plug-in terminals. The correct method of connecting the bus cable at the connector is shown in the following diagram.

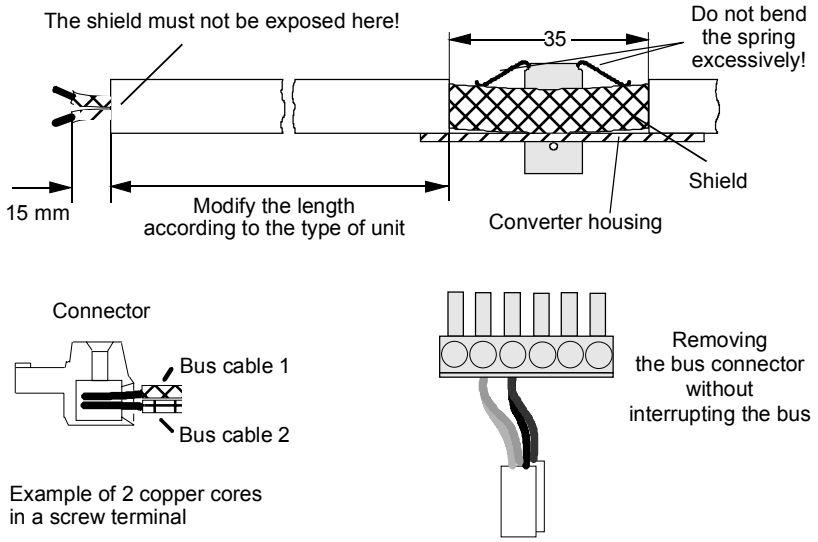

Fig. 8.1-9 Connecting up the bus cables

NOTE

It must be ensured that both copper cores are securely held inside the screw terminal.

8.1.4.3 EMC measures

For interference-free operation of the USS, it is absolutely necessary that the following measures are carried out:

Shielding

Shielding is necessary for damping magnetic, electrical and electromagnetic interference fields. Interference currents are discharged to earth by the shield braiding via the housing earth.

NOTE

The bus cables must be twisted and shielded and are to be routed separately from power cables, the minimum clearance being 20 cm. The shield must be connected through the largest possible surface area on both sides, i.e. the shield of the bus cable between 2 converters must be connected to the converter housing at **both** ends. The same applies to the shield of the bus cable between master and converter.

If bus and power cables intersect, they must do so at an angle of 90 °.

- With regard to the bus cable, the shield must not be exposed in the bus connector. Shielding is provided by the shield clamps (Compact type units) or shield clamps and cable ties (chassis type units) at the converter housing. How to use the shield clamps is shown in the following illustration. It must be ensured that the solid copper core is not damaged when the insulation is removed from the ends of the conductors.
- It must also be ensured that the shield of every bus cable is connected where the cable enters the cabinet as well as at the converter housing!

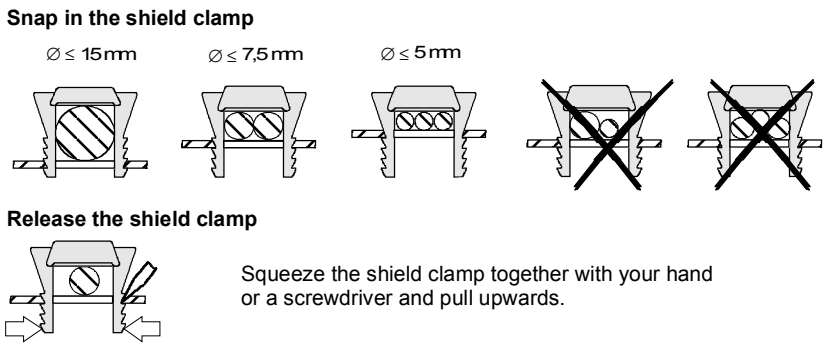

Fig. 8.1-10 Using the shield clamps

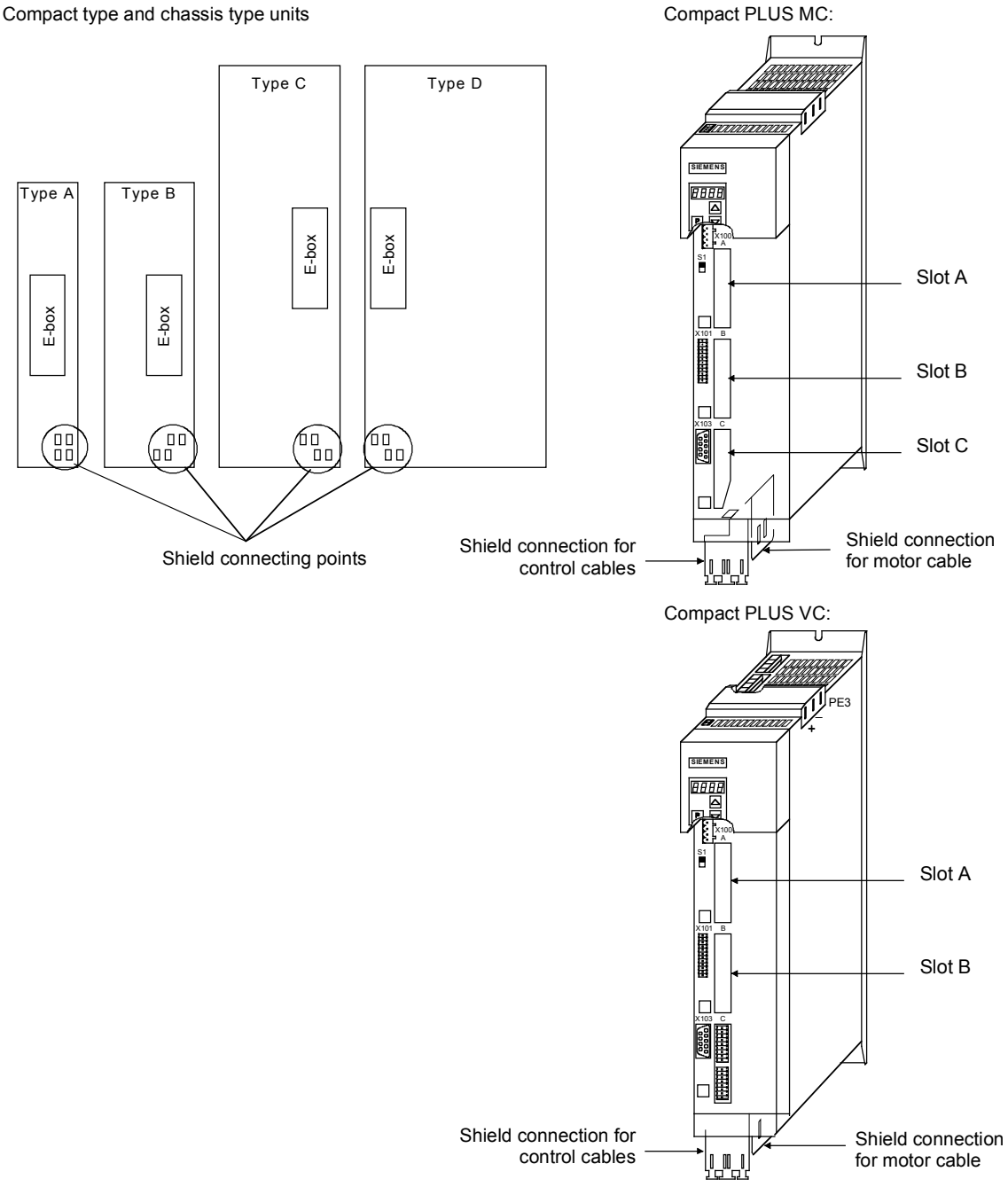

Fig. 8.1-11 Position of the shield connecting points

Equipotential bonding

Equipotential bonding is necessary in order to prevent differences in potential (e.g. due to different supply voltages) between the individual bus nodes (converters and master system).

- This is achieved with the help of equipotential-bonding conductors:
  - 16 mm^2 Cu for equipotential-bonding conductors up to 200 m in length
  - 25 mm^2 Cu for equipotential-bonding conductors more then 200 m in length
- The equipotential-bonding conductors are to be laid so that there is the smallest possible surface area between a conductor and any signal cables.
- The equipotential-bonding conductor must be connected to the earth electrode/protective conductor through the largest possible surface area.

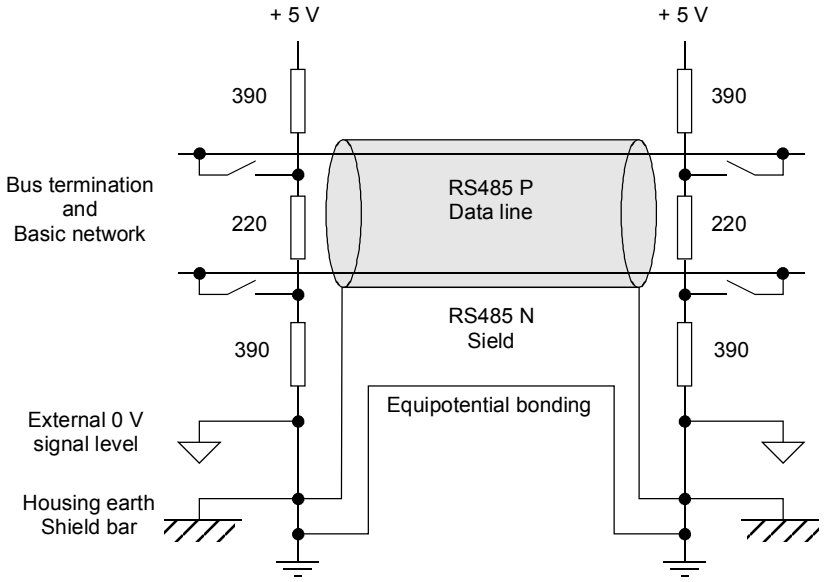

Fig. 8.1-12 Shielding and equipotential bonding

Laying cables

Instructions for laying cables:

- Bus cables (signal cables) must not be laid close to and parallel to power cables.
- Signal cables and the associated equipotential-bonding cables must be laid as closely together as possible and kept as short as possible.
- Power cables and signal cables must be laid in separate cable ducts.
- Shields must be connected through the largest possible surface area.

For more information on electromagnetically compatible installation of systems, see for example Chapter 3 of the Compendium or the description "Instructions for Design of Drives in Conformance with EMC Regulations" (Order No. 6SE7087-6CX87-8CE0).

8.1.4.4 Bus termination, USS protocol

In order to ensure interference-free USS operation, the bus cable must be terminated with bus terminating resistors at both ends. The bus cable from the first USS node to the last USS node is to be regarded as **one** bus cable. The USS bus therefore must be terminated twice. The bus terminating resistors must be switched in at the **first** bus node (e.g. master) and **last** bus node (e.g. converter).

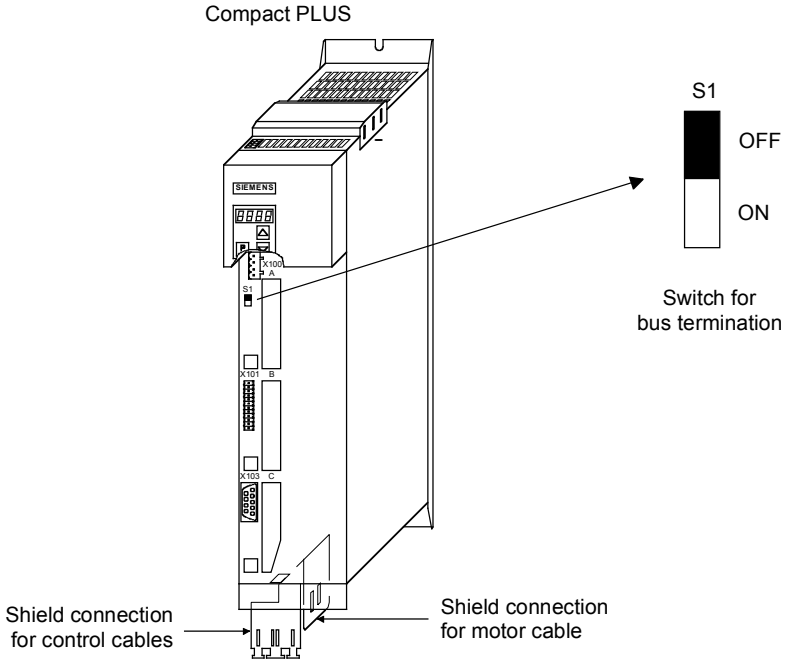

Fig. 8.1-13 S1 bus-terminating switches in the Compact PLUS type of unit

NOTE

In the Compact and chassis type units, two mutually independent USS interfaces (SCom1 and SCom2) are available. Switch S1 or S2 is provided for switching in the terminating resistor.

If the bus-terminating node is a T100 board, the bus terminating resistors are switched in through the two plug-in jumpers, X8 and X9.

NOTE

- When the unit is supplied, the terminating resistors are not switched in!
- Please note that the bus termination is switched in only at the first bus node (e.g. SIMATIC S 5/CP524) and last bus node (e.g. CUMC)! When the matching resistors are being set, the electronics box must be **isolated from supply**!
- **Data transmission faults possible on the bus!**
  During active bus operation, the units with a **switched-in** terminating resistor must not be disconnected from supply. The matching resistor when disconnected from supply (off-load) is no longer effective because the terminating resistor obtains its voltage from the connected unit.

Bus connection via terminal strip

The following illustration shows an example of the bus connection at terminal strip X100 (Compact PLUS). If the connector at terminal strip X100 of one node is removed, data transfer via bus is **not** interrupted. The other nodes on the bus continue to be supplied with data via the bus.

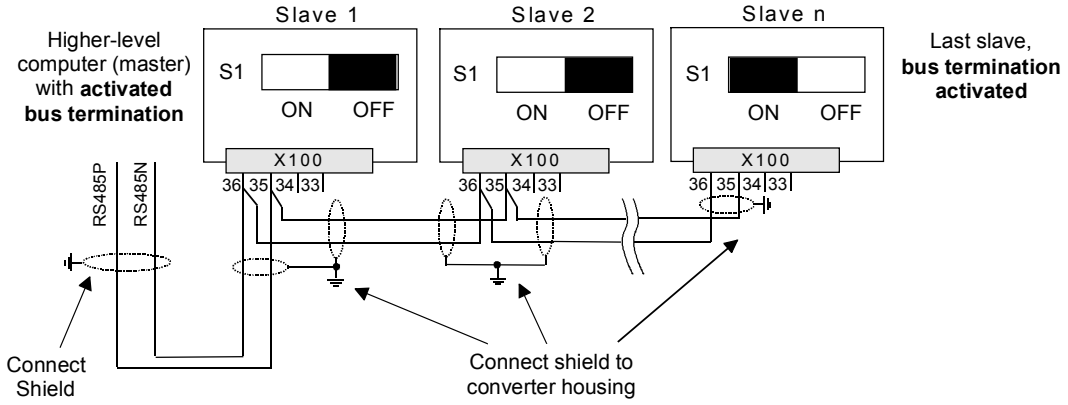

Fig. 8.1-14 Connection of the 2-wire bus cable at terminal strip X100 (Compact PLUS)

Bus connection via connector X103

The following illustration shows the structure of a bus connection via the 9-pin connector, X103 (Compact PLUS).

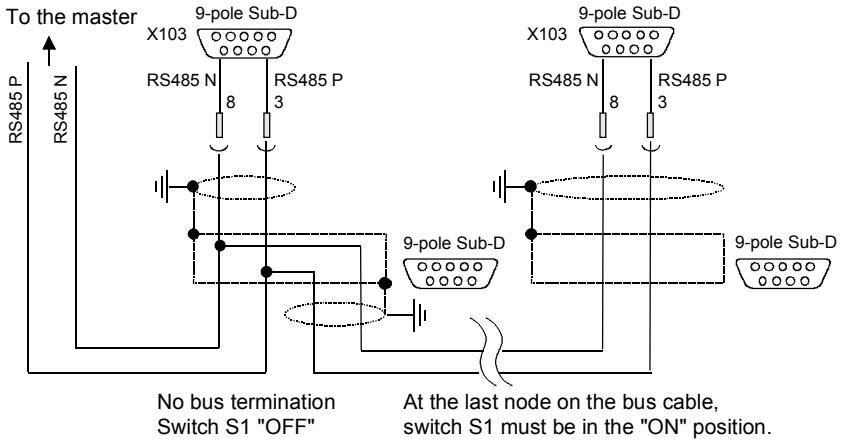

Fig. 8.1-15 Connection of the 2-wire bus cable at terminal strip X103 (Compact PLUS)

8.1.5 Start-up

The USS protocol can be started up in two steps:

1. Parameterization of the USS protocol at the "selected" interface
2. Parameterization of process-data interconnections and the "parameterizing enable" for the selected interface.

Parameterizing the USS protocol
Create the right conditions: • Set P060 = 1 (menu selection)
Parameterize the interface: Settings to be made: • P682 (SCB protocol) only applies to the SCB2, • P700 (SCom/SCB BusAddr), P701 (SCom/SCB baud rate), • P702 (SCom/SCB PKW #), P703 (SCom/SCB PcD # and P704 (SCom/SCB TlgOFF)

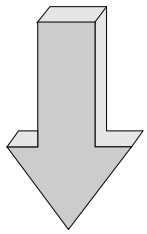

Parameterizing the parameterizing enable and process-data interconnections
Set the **parameterizing enable** via USS at the selected interface: • Set P053 (parameter access)
Set process-data interconnections: • For status words and actual values: P707 (Src SCom 1 TrnsDat) and P708 (Src SCom 2 TrnsDat) for CUMC P690 (SCB actual value) for SCB 2 board • For control words and setpoints: e.g. P554 (control word, bit 0) to P591 (control word, bit 32), P443 (Src Main Setp), P433 (Src Add Setp1), etc.

8.1.5.1 Parameterization of the USS protocol (1st step)

The USS protocol is parameterized at serial interfaces SCom 1 and SCom 2 on the CU board of the basic units or at the serial interface on the SCB 2 board by means of the following parameters: **P682, P700, P701, P702, P703** and **P704**.

NOTE

The USS protocol is parameterized at the serial interface of the T100 technology board by means of the "technology parameters" H290, H291, H292, H293, H294 and H295. These parameters are part of the T100 (see software instruction manual of the T100).

Example 1 **USS protocol at the SCom1 on MASTERDRIVES MC**

As already described in Section 8.1.3, the bus cable for the SIMOVERT MASTERDRIVES MC can be connected either at terminal strip X100/X103 ("Compact PLUS" type) or at connector X103/X300 ("Compact" and "chassis" types).

- Settings:
  USS protocol with 19.2 kbit/s and 3-word PKW area and 2-word PZD area
  - 3-word PKW area:
    With this setting, all parameters whose values are 16-bit quantities (1 word) can be read and written via the USS protocol.
  - 2-word PZD area:
    Transfers control word 1 and a setpoint (each of them 16 bit) from the master to the converter and status word 1 and an actual value (each of them 16 bit) from the converter to the master.
- Preconditions:
  P060 = 1 or 7 (default setting)
- Parameterizing the SCom 1 interface (applies to X100 or X103 ("Compact PLUS" type) and X103 or X300 ("Compact" and "chassis" types) at the same time):

Parameter number	Parameter	Index and value (index i001 for SCom 1)	Comments
P700	SCom/SCB BusAddr	i001 = 0	Bus address SCom1 = 0
P701	SCom/SCB Baud	i001 = 7	19.2 kbit/s
P702	SCom/SCB PKW #	i001 = 3	3-word PKW (SCom 1)
P703	SCom/SCB PcD #	i001 = 2	2-word PZD (SCom 1)
P704	SCom/SCB TlgOFF	i001 = 0 to 6500	0: No monitoring >0: Monitoring time in ms

Example 2 **USS protocol at the SCom2 (only in Compact type and chassis type units)**

- Setting:
  USS protocol with 38.4 kbit/s and 4-word PKW area and 6-word PZD area
  - 4-word PKW area:
    With this setting, all parameters whose values are 16-bit (= 1 word) or 32-bit (double word) quantities can be read or written via the USS protocol.
  - 6-word PZD area:
    Transfers control words 1 and 2 and a maximum of four setpoints (each of them 16 bits) from the master to the converter or control words 1 and 2 (each one of them 16 bits) and a maximum of four actual values (each one of them 16 bits) from the converter to the master.
- Preconditions:
  P060 = 1 or 7
- Parameterizing the SCom2 interface (CUMC: X103, CUVC: X101):

Parameter number	Parameter	Index and value (index i002 for SCom 2)	Comments
P700	SCom/SCB BusAddr	i002 = 15	Bus address, SCom 2 = 15
P701	SCom/SCB Baud	i002 = 8	38.4 kbit/s
P702	SCom/SCB PKW #	i002 = 4	4-word PKW (SCom 2)
P703	SCom/SCB PcD #	i002 = 6	6-word PZD (SCom 2)
P704	SCom/SCB TlgOFF	i002 = 0 to 6500	0: No monitoring >0: Monitoring time in ms

Example 3 **USS protocol at the SCB2 board**

- Settings:
  USS protocol with 19.2 kbit/s and 4-word PKW area and 2-word PZD area
  - 4-word PKW area:
    With this setting, all parameters whose values are 16-bit (= 1 word) or 32-bit (double word) quantities can be read or written via the USS protocol.
  - 2-word PZD area:
    Transfers control word 1 and a setpoint (each of them 16 bit) from the master to the converter and control word 1 and an actual value (each of them 16 bit) from the converter to the master.
- Preconditions:
  P060 = 1 or 7
- Parameterization of the interface on the SCB2 board:

Parameter number	Parameter	Value	Comments
P682	SCB protocol	2	Physical bus cable, 2-wire USS protocol (according to /1/, only USS operation with 2 wires is defined).

Parameter number	Parameter	Index and value (index i003 for SCB2)	Comments
P700	SCom/SCB BusAddr	i003 = 21	Bus address SCom2 = 21
P701	SCom/SCB Baud rate	i003 = 7	19.2 kbit/s
P702	SCom/SCB PKW #	i003 = 4	4-word PKW
P703	SCom/SCB PcD #	i003 = 2	2-word PZD
P704	SCom/SCB TlgOFF	i003 = 0 to 6500	0: No monitoring >0: Monitoring time in ms

Example 4 **USS protocol on the CBP2 board**

- Settings:
  USS protocol with 19.2 kbit/s and 4-word PKW area and 2-word PZD area
  - 4-word PKW area:
    With this setting, all parameters whose values are 16 bit- (= 1 word) or 32-bit variables (double word) can be read or written by means of the USS protocol.
  - 2-word PZD area:
    Transmission of control word 1 and a setpoint (each 16 bits) from the master to the converter and of status word 1 and an actual value (each 16 bits) from the converter to the master.
- Requirements:
  P060 = 1 or 7
- Parameterization of the interface on the CBP2 board:

Parameter number	Parameter	Value	Comments
P713.x	CBP2 protocol	2	A change from PROFIBUS to USS protocol and vice versa only comes into effect when the voltage of the drive is turned off and then on again.

Parameter number	Parameter	Value	Comments
P918.x	CBP2 BusAddr	21	Bus address CBP2 = 21
P718.x	CBP2 Baud	7	19.2 kbit/s
P719.x	CBP2 PKW #.	4	4-word PKW
P720.x	CBP2 PcD #.	2	2-word PZD
P722.x	CBP2 TlgOFF.	0...6500	0: No monitoring >0: Monitoring time in ms

8.1.5.2 Parameterizing the parameterizing enable and process-data interconnections (2nd step)

Parameterization of the parameterizing enable

During start-up, an interface with the USS protocol must be explicitly enabled for parameterization in order to be able to change (= write) the parameters of a SIMOVERT MASTERDRIVES via this interface – this applies to the parameters of the basic unit (P/U parameters) and to the technology-board parameters (H/L parameters).

NOTE

Access to the SIMOVERT MASTERDRIVES via USS protocol is only possible if, during start-up, the PKW area is appropriately defined to contain 3, 4 words (fixed length) or a variable PKW length (= value 127) in the useful (net) data area.

The following rules apply to this:

- All parameters (P, r, U and n parameters of the basic units, or H, d, L and c parameters of the technology board) can be read out via any interface. **For reading purposes**, it is **not** necessary that the interface has been enabled for parameterization.

  P, U, H and L parameters: Can be read and written
  r, n, d and c parameters: Can only be read

- Parameterizing enable is specified in **parameter P053** (parameter access). This parameter **can always be written** from any interface.
- Several interfaces can be in possession of a parameterizing enable simultaneously.

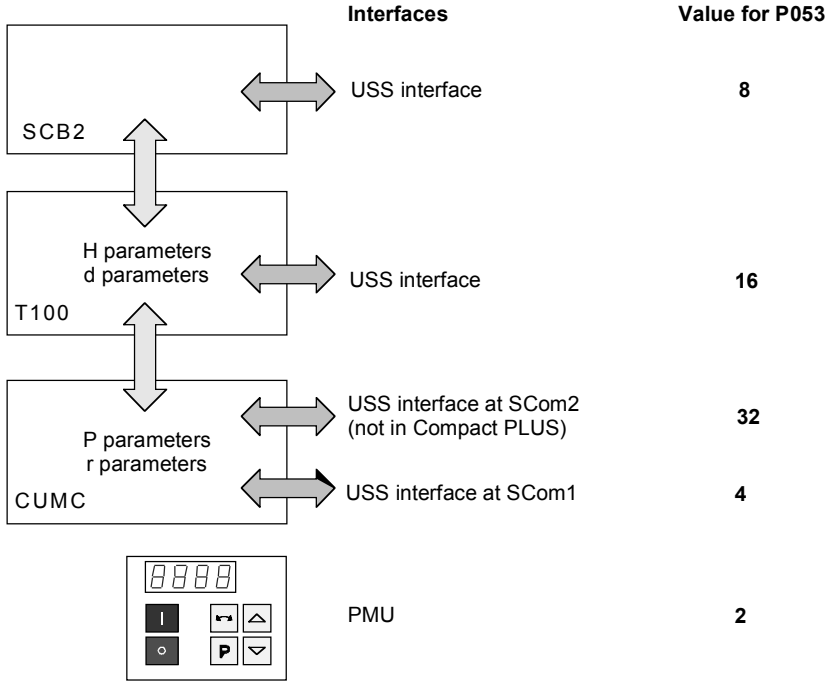

Fig. 8.1-16 Parameterizing enable for the USS interfaces

The rules for generating the value which is entered in parameter P053 for specifying parameter access is explained with the following example.

Example

Setting the parameterizing enable for SIMOVERT MASTERDRIVES with SCB2

Setting:
Write access to the parameters of the basic units (P parameters) via the PMU as well as via the USS protocol at both SCom1 interfaces and on SCB2

Parameter number	Value	Comments
P053	14	2 = PMU, 4 = SCom1, 8 = SCB2 ⇒ value = 2 + 4 + 8 = 14

Parameterizing process-data interconnections

As already described in Section 8.1.2.3 (PZD area), the PZD area consists of a maximum of 16 words. During start-up, the length of this area is defined in words using parameter P703 (SST/SCB PZD #). This definition applies to the telegram from the master to the converter and, vice versa, to the telegram from the converter back to the master. In the telegram from the master to the converter, the PZD area contains control word 1 or control word 2 and the setpoints. In the telegram from the converter to the master, status word 1 or status word 2 and the actual values are transferred.

1 word	1 word	1 word		1 word
PZD1	PZD2	PZD3	• • •	PZD16

Maximum 16 words
Minimum 0 words, i.e. no PZD area in the net data block

NOTE

Here, process-data interconnection is only described for the basic units. Process-data interconnection for the technology boards is described in their instruction manual.

"Interconnecting" control word 1 and control word 2

The two control words (bits 0 to 15) and 2 (bits 16 to 31) give commands and external information to the converter. A select parameter is assigned to each control-word bit, e.g. bit 0 of parameter P554. The select parameter specifies from which source(s) this control bit can be influenced (= changed).

USS interface, from which control word bits 0 to 15 (= control word 1) are to be changed (source)	Values to which select parameters P554 to P575 are to be set
SCom1	**2**1xy
SCom2	**6**1xy
SCB2	**4**5xy

Note:

- e.g. **2**1xy:
  The first digit (here 2) identifies the interface SST1 as source.
  The second digit (here 1) indicates that it is the 1st word in the PZD area of the telegram. "xy" (= 00 to 15) identifies the bit position.

NOTE

Control word 1 is always transferred in the 1st word of the PZD area in the USS protocol.

Example 1

- The control word command "ON/OFF1" should be taken from bit 0 in the 1st PZD word of SST1.
- The control word command "OFF2" should be taken from bit 1 in the 1st PZD word of SST1.
- The control word command "ACK" should be taken from bit 7 in the 1st PZD word of SST1.

Parameter number	Parameter	Index and value (index i001 for BICO data set 1) (index i002 for BICO data set 2)	Comments
P554	Source ON/OFF1	i001 = 2001	ON/OFF from SCom1
P555	Source 1 OFF2	i001 = 2001	Operating condition/OFF2 from SCom1
P565	Source 1 ACK	i001 = 2107	Edge 0 ⇒ 1

etc.

Values of select parameters P576 to P591

The following values of select parameters P576 to P591 are to be set for the USS interfaces:

USS interface from which control-word bits 16 to 31 (= control word 2) are to be changed (source)	Values to which select parameters P576 to P591 are to be set
SCom1	**2**4xy
SCom2 (not with the Compact PLUS)	**6**4xy
SCB2	**4**8xy

Note:

- e.g. **4**8xy:
  The first position (in this case, 4) identifies the interface on SCB 2 as the source.
  The second digit (here 8) indicates that it is the 4th word in the PZD area of the telegram (5 signifies the 1st word). "xy" (= 00 to 15) identifies the bit position.

NOTE

If necessary, control word 2 is always transferred in the 4th word of the PZD area in the USS protocol.
⇒ Set PZD area to a length of at least 4 words (P703).

Example 2

- Bit 0 for switching over the function data set should be taken from bit 0 in the 4th PZD word of SCB2.
- Bit1 for switching over the function data set should be taken from bit 1 in the 4th PZD word of SCB2.

Parameter number	Parameter	Index and value (index i001 for BICO data set 1) (index i002 for BICO data set 2)
P576	Source FDS Bit 0	i001 = 4800
P577	Source FDS Bit 1	i001 = 4801

etc.

"Interconnection" of setpoints

The user can select the source from which the setpoints for the converter are to be taken. This is done in the same way in which control-word bits are "interconnected". This is now illustrated with two examples.

Example 1

The "wiring" of the setpoints is done via parameters P443 (source main setpoint) and P433 (source supplementary setpoint 1).

Source for setpoints	Value for parameters P443 and P428
Interface allocation: SCom1 SCB2	 20xx 45xx
Position of the setpoints (16 bit quantify) in the PZD area: In the 2nd word ⇒ 02 In the 3rd word ⇒ 03 etc.	xx = 02, 03, 04 (only if control word 2 is not transferred), 05, up to 16

The main setpoint comes from SCom 1 and is located in the 2nd word of the PZD area. The supplementary setpoint comes from the USS interface on SCB 2 and is also located in the 2nd word of the PZD area (for BICO data set 1).

Parameter number	Parameter	Index and value (index i001 for BICO data set 1) (index i002 for BICO data set 2)
P443	Source of main setpoint	i001 = 2002
P433	Source of supplementary setpoint 1	i001 = 4502

Example 2

The "wiring" of the setpoints is done via parameters **P443** (source main setpoint), **P433** (source supplementary setpoint 1), **P438** (source supplementary setpoint 2), and so on. For a detailed description, see the instruction manual.

Source for the setpoints	**Values for parameters P443, P433, P438 and so on**
Interface allocation: **SCom1** **SCom2** **SCB2**	 **2**0xx **6**0xx **4**5xx
Position of the setpoints (16-bit quantity) in the PZD area: In the **2**nd word ⇒ 0**2** In the **3**rd word ⇒ 0**3** and so on	xx = 02,03, 04 (only if control word 2 is not transferred), 05, up to 16
Position of the setpoints (32-bit quantity) in the PZD area: In the 2nd word + 3rd word ⇒ 3**2** Rules for generating: xx = 30 (indicates 32-bits) + position in the PZD area at which the 32-bit setpoint begins. In the **3**rd word and 4th word ⇒ 3**3** and so on	x x = 32,33 (only if control word 2 is not transferred), 34 (only if control word 2 is not transferred), 35, up to 45

NOTE

When 32-bit quantities are being transferred, the high word is located in PZD n and the low word in PZD n+1
⇒ For example, 32-bit setpoint in PZD2 and PZD3; the high-word is then transferred in PZD2 and the low word in PZD3 via the USS bus.

The main setpoint (32-bit quantity) comes from SCom1 and is located in the 2nd word and 3rd word of the PZD area. Control word 2 is in the 4th word. In the 5th and 6th words, supplementary setpoint 1 (32-bit quantity) is transmitted (for BICO data set 1).

Parameter number	**Parameter**	**Index and value** (index i001 for BICO data set 1) (index i002 for BICO data set 2)
P443	Source of main setpoint	i001 = 2032
P433	Source of supplementary setpoint 1	i001 = 2035

"Interconnection" of status words 1 and 2 and the actual values

The two status words 1 (bits 0 to 15) and 2 (bits 16 to 31) send messages from the converter to a higher-level converter system.

An indexed parameter is assigned to each interface. Each index is assigned to a net-data word in the PZD area. For example, index i001 to the 1st word, index i002 to the 2nd word and so on up to i016.

Parameter number	Parameter	Index and value (index i001 for BICO data set 1) (index i002 for BICO data set 2)
SCom1	707 (SCom1 actual values)	i001 to 016
SCom2 (not with the Compact PLUS)	708 (SCom2 actual values)	i001 to 016
SCB2	706 (SCB actual values)	i001 to 016

NOTE

Status word 1 is always transferred in the 1st word of the PZD area in the USS protocol.

Example 1

"Interconnection" of status word 1 and the actual speed/frequency (KK0091) at interface SCom1.

- Precondition:
  PZD area at least 2 words in length; P703, i001 ≥ 2 is set.

Parameter No.	Parameter	Index and value	Comments
P707	SCom1 actual values	i00**1** = 0032	1st word in the PZD area: status word (K0032)
		i00**2** = 0091	2nd word in the PZD area: actual speed/frequency (KK0091, only H-Word)
		i003 to i016 = 0	3rd to 16th word in the PZD area (if parameterized): "Not interconnected"

Example 2

"Interconnection" of status word 1, status word 2, actual speed (KK0091) and the actual DC link voltage (K0240) at the interface on SCB2.

- Precondition:
  PZD area at least 5 words in length; P703, i003 ≥ 5 is set.

Parameter number	Parameter	Index and value	Comments
P706	SCB actual values	i00**1** = 0032	1st word in the PZD area: status word (K0032)
		i00**2** = 0091	2nd word in the PZD area: high word of the actual speed (KK0091)
		i00**3** = 0091	3rd word in the PZD area: low word of the actual speed (KK0091)
		i00**4** = 0033	4th word in the PZD area: status word 2 (K0033)
		i00**5** = 0240	5th word in the PZD area: Vd(act) (K0240)

NOTE

When 32-bit quantities are being transferred, the high word is located in PZD n, the low word in PZD n+1.
⇒ For example, 32-bit actual value of KK0091 in PZD2 and PZD3.

8.2 PROFIBUS

In addition to the CBP communications board, there is the CBP2 with extended functionality. It replaces but remains fully compatible with the CBP.

In the following, "CBP" refers to both boards. Any individual features which a board possesses are specially indicated.

8.2.1 Product description of the CBP communications board

The CBP communications board (Communications board PROFIBUS) is for linking SIMOVERT MASTERDRIVES® to higher-level automation systems via PROFIBUS-DP.

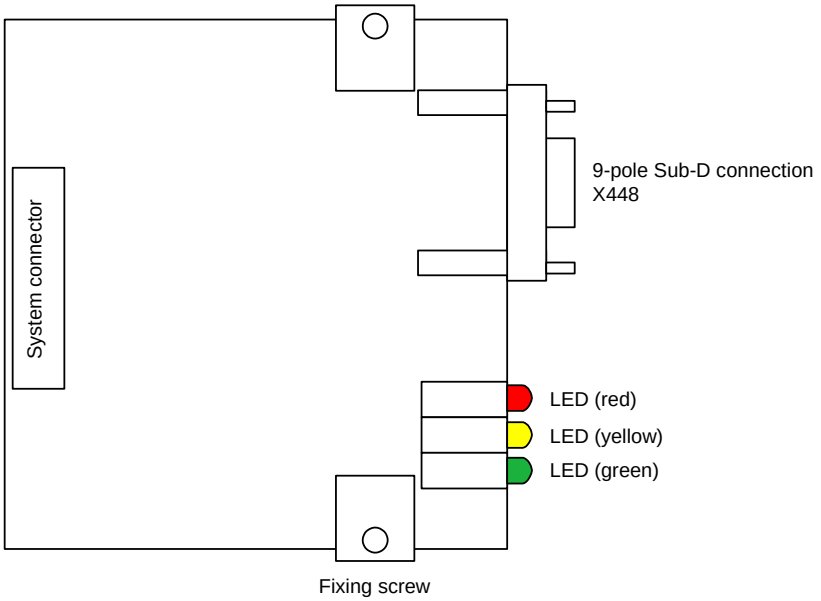

Fig. 8.2-1 View of the communications board

Technical data

The communications board has three LEDs (green, yellow, red) for providing information on the current operating status.

Voltage is supplied from the basic unit through the system's plug-in connector.

The CBP has a 9-pole SUB D socket (X448) which is provided for connecting it up to the PROFIBUS system in accordance with the PROFIBUS standard. All connections of this RS485 interface are short-circuit-proof and floating.

The CBP supports baud rates of 9.6 kbaud to 12 Mbaud and is also suitable for connecting fiber-optic cable by means of optical link plugs (OLPs).

NOTE

For reasons of space, optical link plugs cannot be used for Compact units, types 1 and 2!

Functionality

- Useful data is exchanged with the master according to the "PROFIBUS profile for variable-speed drives", PROFIdrive.
- Acyclical communications channel for transferring parameter values up to a length of 101 words with a SIMATIC S7-CPU.
- Acyclical communications channel for linking the PC-based Drive ES start-up and service tool.
- Automatic adoption of the useful data structure defined in the master.
- Monitoring of the bus interface.
- Supporting of SYNC-type PROFIBUS control commands for synchronized data transfer from the master to several slaves.
- Supporting of FREEZE-type PROFIBUS control commands for synchronized data transfer from several slaves to the master.
- Extremely simple parameterization of the CBP via the PMU of the basic unit.

Extended functionality of the CBP2

- Flexible configuration of the setpoints/actual values up to a maximum of 16 process data words
- Clock synchronization at the isochronous PROFIBUS for synchronization of processing by the master and slaves (MASTERDRIVES MC only)
- Cross traffic for direct data exchange between slaves
- Direct access to a drive by a SIMATIC OP
- USS protocol

Extension by PROFIdrive V3 functions in conjunction with CBP2 from V2.20

- Acyclical parameter channel in accordance with PROFIdrive profile, version 3, with data block 47
- Standard telegrams 1 to 6

For MASTERDRIVES MC and during use of T100 or T300, please pay attention to the note in Section 2.3.2 "TB Blocks".

8.2.2 Description of the CBP's functions on the PROFIBUS-DP

Definition

PROFIBUS is an international, open field bus standard with a wide scope of application in production and process automation. Neutrality and openness are guaranteed by international standards EN 50170 and IEC 61158.

The PROFIBUS-DP enables very fast, time-critical transfer of data on the field level.

With the PROFIBUS, a distinction is made between masters and slaves.

- **Masters** determine data traffic on the bus and are also designated in the literature as active nodes.
  There are two classes of master:
  - DP-Master Class 1 (DPM1):
    These are central stations (e.g. SIMATIC S5, S7 and SIMADYN D) which exchange information with the slaves in defined communications cycles.
  - DP-Master Class 2 (DPM2):
    Units of this type are programming units, planning units or control and monitoring units which are used for configuring, starting up or monitoring systems in operation.
- **Slaves** (e.g. CBP, CB15 etc.) can only acknowledge the messages they receive or transfer messages to a master when the latter requests a slave to do so. Slaves are also designated as passive nodes.

Protocol architecture

The protocol architecture of the PROFIBUS-DP is oriented to the OSI (Open System Interconnection) reference model in accordance with the international standard, ISO 7498, and uses layers 1 and 2 as well as the user interface.

Transmission equipment

When transmission equipment is being selected, criteria such as high transmission speed and simple, inexpensive wiring and cabling is of primary importance. PROFIBUS supports transmission according to RS485 and also transmission by means of fiber-optic cable.

The transmission speed can be selected between 9.6 kbaud and 12 Mbaud. The **same speed is specified for all units** on the bus when the system is started up for the first time.

Bus-access procedure

The PROFIBUS works according to the token-passing procedure, i.e. the masters become token holders for a defined time window in a logical ring. Within this time window, the master can communicate with other masters. Alternatively, it can communicate with slaves by using a lower-level master-slave procedure.

The PROFIBUS-DP mainly uses the master-slave method and data is usually exchanged with the drives cyclically.

Data exchange via PROFIBUS

This enables very rapid data exchange between the higher-level systems (e.g. SIMATIC, SIMADYN D, PC/PGs) and the drives. Access to the drives is always made according to the master-slaves method. The drives are always the slaves and each slave is clearly defined by its address.

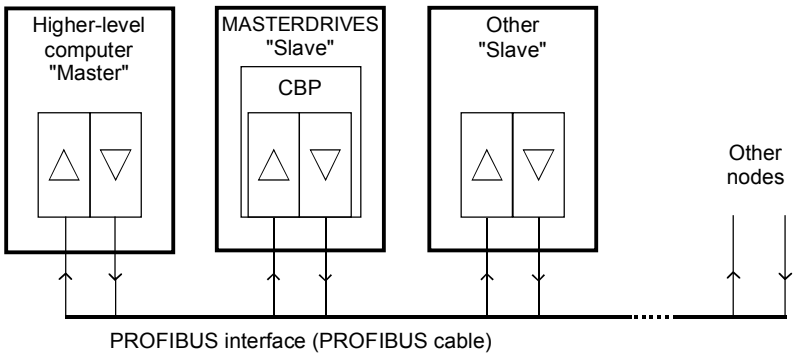

Fig. 8.2-2 PROFIBUS interfaces

The cyclical communications functions are determined by the PROFIBUS-DP basic functions in accordance with EN 50170.

For purposes of parameterization during cyclical data exchange with intelligent drives, acyclical extended communications functions are also used which are defined in PROFIBUS Guideline No. 2.081 (German) or 2.082 (English).

The following illustration contains an overview of the communications functions which are enabled with the CBP.

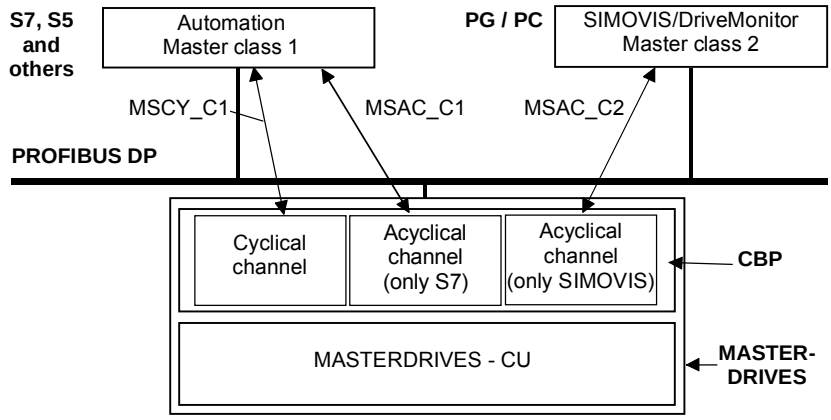

Fig. 8.2-3 Data-traffic channels of the CBP

The following illustration contains an overview of the communications functions which are enabled with the CBP2:

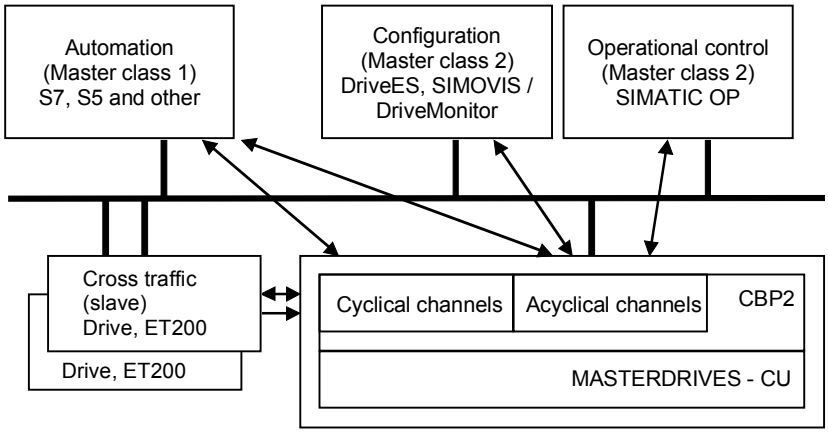

Fig. 8.2-4 Data-traffic channels of the CBP2

8.2.2.1 Cyclical data transmission

DANGER

When interconnecting connectors, binectors, and double word connectors, please note that simultaneous interconnection of a connector, and a double word connector with the same name is not permitted, because when a double word connector (e. g. KK3032) is connected, the meanings of the connectors K3002 and K3003 are swapped round (high-word and low-word exchanged).

On MASTERDRIVES MC and Compact Plus on software version V1.50 and higher and on MASTERDRIVES CUVC on software version V3.23 and higher, simultaneous use of connectors and double word connectors with the same name is mutually interlocked (see also function diagrams [121] and [131]).

Because the binectors are not included in the interlocking (to ensure compatibility for older configurations), their significance changes according to whether the pertinent word or double word is wired.

The structure of useful data as PPOs

Useful data for the **cyclical MSCY_C1 channel** (see Figs. 8.2-3 and 8.2-4) is structurally defined in the PROFIBUS profile for variable-speed drives version 2 as a parameter process data object (PPO).

Frequently, the **cyclical MSCY_C1 channel** is simply called the STANDARD channel as well.

NOTES

Data is exchanged with the MASTERDRIVES in accordance with the specifications of the PNO guideline "PROFIBUS profile for variable-speed drives". PROFIdrive CBP and CBP2 V2.10 implement PROFIdrive version 2 (PNO: Order No. 3071).
CBP2, V2.20 and later, implements PROFIdrive Version 3 (PNO: Order No. 3172) as a compatible expansion. The useful data structure described below is still supported.

For the drives, the guideline specifies the useful-data structure with which a master can access the drive slaves by means of cyclical MSCY_C1 data transfer. With MSCY_C1 data transfer, useful data is divided up into two areas which can be transmitted in each telegram:

- The process data area (PZD), i.e. control words and setpoints or status information and actual values
- The parameter area (PKW) for reading/writing parameters – e.g. reading out faults – and for reading out information on the characteristics of a parameter such as reading out the min./max. limits etc.

The type of PPO (see next page) used by the PROFIBUS-DP master to communicate with the converter can be configured from the master when the bus system is started up. Which type of PPO is selected depends on the task of the drive in the automation network. The process data are always transmitted. In the drive, they are processed with the highest priority and in the shortest time slots. The process data are used to coordinate the drive with the other units in the automation network, e.g. for power on/off, entering setpoints etc.

With the help of the parameter area, the user can access all the parameters in the converter via the bus system as required. For example, detailed diagnostic information, alarms and so on can be read out. In this way, a higher-level system, (e.g. a PC), can be used to call additional information for visualization of the drive without affecting process data transmission.

The telegrams of cyclical data transfer therefore have the following basic structure:

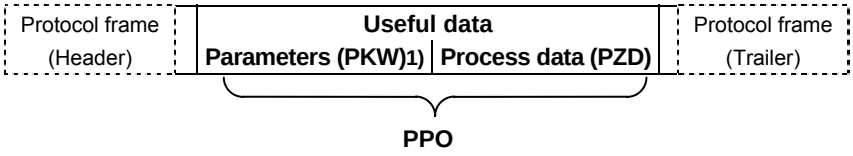

1) PKW: Parameter identifier value

There are five types of PPO:

- Useful data **without** a parameter area with two words or six words of process data
- or useful data **with** a parameter area and two, six or ten words of process data.

	PKW				PZD									
	PKE	**IND**	**PWE**		**PZD1 STW1 ZSW1**	**PZD2 HSW HIW**	**PZD3**	**PZD4**	**PZD5**	**PZD6**	**PZD7**	**PZD8**	**PZD9**	**PZD10**
	1st Word	2nd Word	3rd Word	4th Word	1st Word	2nd Word	3rd Word	4th Word	5th Word	6th Word	7th Word	8th Word	9th Word	10th Word
PPO1														
PPO2														
PPO3														
PPO4														
PPO5														

PKW: Parameter ID value
PZD: Process data
PKE: Parameter ID
IND: Index
PWE: Parameter value

STW: Control word 1
ZSW: Status word 1
HSW: Main setpoint
HIW: Main actual value

Table 8.2-1 Parameter process data object (PPO types)

Dividing the useful data into parameter identifier values and process data enables different tasks to be carried out.

Parameter data area (PKW)

With the PKW (parameter identifier value) part of the telegram, any parameter in the converter can be observed and/or altered. The mechanisms of task/reply IDs necessary for this are described later in the chapter "Mechanisms of PKW processing".

Process data area (PZD)

With the process data part, control words and setpoints (tasks: master → converter) or status words and actual values (replies: converter → master) are transferred.

The transferred process data only have an effect if the control-word bits, the setpoints, the status words and the actual values are routed in the basic unit in accordance with the chapter "Process data wiring".

The following page gives an overview of typical ways of routing process data to the basic unit. For this routing of the data, the term "process data wiring" is often used.

NOTE

The following process data wiring only applies if a technology board has not been mounted.
If a technology board is used (e.g. T400, T300, T100), the process data wiring in the manual for the technology board is to be used.

Telegram: Master → Converter	**PZD**									
(Setpoint channel)	PZD 1 STW1 1st word	PZD 2 HSW 2nd word	PZD 3 3rd word	PZD 4 4th word	PZD 5 5th word	PZD 6 6th word	PZD 7 7th word	PZD 8 8th word	PZD 9 9th word	PZD 10 10th word
Combination values for:										
16-bit process data	3001	3002	3003	3004	3005	3006	3007	3008	3009	3010
16-/32-bit process data (example)	3001	3032		3004	3035		3037		3039	
Alternatives	3001	3032		3004	3005	3036		3038		3010
	3001	3002	3003	3004	3035		3007	3038		3010
Process data quantity for:										
PPO types 1 and 3	PZD2									
PPO types 2 and 4	PZD6									
PPO type 5	PZD10									

Telegram: Converter → Master	**PZD**									
(Actual-value channel)	PZD 1 ZSW1	PZD 2 HIW	PZD 3	PZD 4	PZD 5	PZD 6	PZD 7	PZD 8	PZD 9	PZD 10
Assignment of actual-value parameters for	P734	P734	P734	P734	P734	P734	P734	P734	P734	P734
16-bit process data	P694	P694	P694	P694	P694	P694	P694	P694	P694	P694
	i001	i002	i003	i004	i005	i006	i007	i008	i009	i010
16-/32-bit process data (example)	P734	P734		P734	P734		P734	P734		P734
	P694	P694		P694	P694		P694	P694		P694
	i001	i002 = i003		i004	i005 = i006		i007	i008 = i009		i010

Parameters for FC (CU1), VC (CU2) and SC (CU3)

PZD: Process data
STW: Control word
ZSW: Status word
HSW: Main setpoint
HIW: Main actual value

Table 8.2-2 Fixed assignment and combination values

NOTE

If a second CBP is being operated in the converter, then the "8000" connectors will be applicable for the second CBP instead of the "3000" connectors, and parameter P736 will be applicable instead of parameter P734 (see function diagrams for CB/TB boards in Chapter 12).

CBP2 - Free configuration

Extended functionality of the CBP2 in a SIMATIC STEP7 environment with DriveES:

In addition to the five types of PPO, free configuration of the cyclical data is possible.

Up to 16 process data words can be configured, even with a different number of setpoints and actual values. The consistency ranges can be flexibly adjusted.

A parameter area (PKW) can be configured irrespective of the number of process data items.

CBP2, V2.20 and later, standard telegrams

On version V2.20 and later of the CBP2, cyclic data transmission is implemented via standard telegrams in accordance with PROFIdrive profile, version 3.

The CBP2 supports standard telegrams 1 to 6 (cf. Section 8.2.7.3 "Process data interconnection via standard tele").

8.2.2.2 Acyclical data transfer

Extended DP functions

The PROFIBUS-DP has now been improved to include other methods of data transfer. In addition to cyclical data transfer, the extended PROFIBUS-DP enables the following forms of data transfer as defined in PROFIBUS guidelines No. 2.081 (German) or 2.082 (English):

- Acyclical data transfer at the same time as cyclical data transfer
- Alarm processing

Acyclical data transfer enables:

- the exchange of larger amounts of useful data up to 206 bytes
- a reduction in the number of peripheral addresses in the SIMATIC by means of relocating the PKW area from cyclical to first acyclical data transfer
- as a result, also reduction of the bus cycle time due to shorter telegrams in cyclical data transfer
- simultaneous access by Drive ES (PG/PC) for diagnosis and parameterization by means of the second data transfer

Realization of the extended DP functions

The different masters or the different methods of data transfer are represented in the CBP by corresponding channels (see Fig. 8.2-4):

- **Cyclical data transfer with a Class 1 master (MSCY_C1)**
  Use of DATA-EXCHANGE and the PPO types in accordance with the PROFIdrive profile
- **Acyclical data transfer** with the same **Class 1 master (MSAC_C1)**
  Use of the PROFIBUS functions, DDLM_READ and DDLM_WRITE
  The contents of the transferred data block corresponds to the structure of the parameter area (PKW) in accordance with the USS specification (with data block 100)
  or (for CBP2 V2.20 and later only)
  the structure of the acyclic parameter channel according to PROFIdrive profile, version 3 (with data block 47).
- **Acyclical data transfer with DriveES (Class 2 master; MSAC_C2)**
  The DriveES can access parameters and process data in the basic units acyclically.
- **CBP2: acyclical data traffic with SIMATIC OP (second Class 2 master; MSAC_C2) only**
  SIMATIC OP can access parameters in the basic units acyclically.
- CBP2 V2.20 and later only: Instead of DriveES or SIMATIC OP an external master (Class 2 Master) compliant with acyclic parameter channel according to PROFIdrive profile version 3 with data block 47 can also access the converter.

8.2.2.3 Acyclical master class 1, automation (PLC)

MSAC_C1 channel

Acyclical communication between the DP master Class 1 (DPM1) and the DP slaves takes place via supplementary service access point 51. In a service sequence, the DPM1 establishes a link to the slave, this link being designated MSAC_C1. Establishment of this link is closely related to the link for cyclical data transfer between the DPM1 and the slaves. Once a link has been established, the DPM1 can conduct cyclical data transfer via the MSCY_C1 link and, at the same time, acyclical data transfer via the MSAC_C1 link.

The MSAC_C1 channel enables READING and WRITING of any of the data blocks in the slave. These data blocks are accessed with the PROFIBUS functions, DDLM_Read and DDLM_Write.

For processing parameters, the CBP supports a data block with the index 100 in slot 2. Because the parameters can only be altered infrequently in comparison to the process data, the parameter area of the telegram can be removed from the fast cyclical channel in order to save bus resources.

NOTE

With the CBP2, version V2.20 and later, a class 1 master automation (PLC) can also utilize acyclic parameter access according to PROFIdrive V3, cf. Section 8.2.4 "PROFIdrive V3: Acyclic parameter accessing with data block 47".

Telegram structure The following illustration shows the telegram structure for data transfer via the acyclical MSAC_C1 channel.

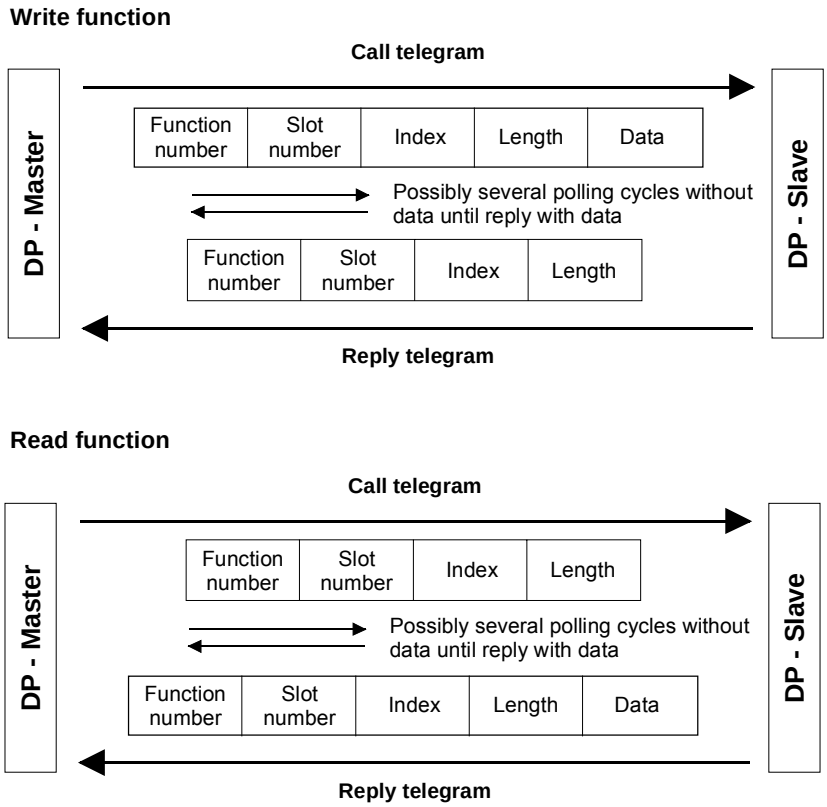

Fig. 8.2-5 Sequence of a Read and Write function

Sequence of a PKW task

The following sequence is necessary for handling a PKW task:

1. With the function DDLM_Write, a PKW task is transferred in the data block with the index 100 to the CBP.
2. A positive acknowledgement of DDLM_Write is awaited.
3. With the function DDLM_Read, the PKW reply is requested by the CBP in the data block with the index 100.
4. The PKW reply to the task is contained in the positive acknowledgement of DDLM_Read.

The contents of the data block with the index 100 corresponds to the structure of the PKW area of the telegram in accordance with the USS specification.

With the PKW (parameter identifier value) area, any parameter in the converter can be visualized and/or altered. The mechanisms of task/reply IDs necessary for this are described later in the chapter "Mechanisms of PKW processing".

In the MSAC_C1 channel, larger amounts of data can be transferred at the same time than by means of PPOs in the cyclical channel. The whole data unit is used exclusively for transmitting parameters.

It offers the same possibilities, however, as in the USS specification, i.e. complete arrays can also be processed with one task (IND = 255). All values of the array are directly transmitted one after the other in a data block. The maximum length of a data block is 206 bytes.

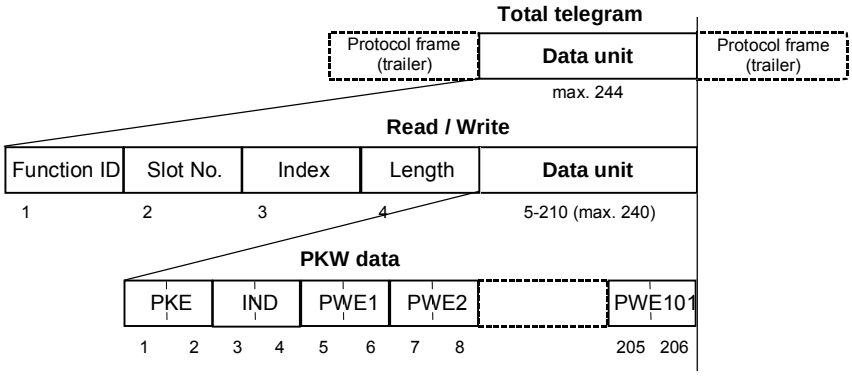

Fig. 8.2-6 Structure of PKW data in cyclical data transfer

NOTE

Process data (PZDs) cannot be stipulated via this acyclical MSAC_C1 channel.

Example for the SIMATIC S7

In the SIMATIC S7, the data block with the index 100 corresponds to the data record DS100.

From the SIMATIC S7 side, data can be exchanged via the MSAC_C1 channel with the system functions SFC 58 "WR_REC" and SFC 59 "RD_REC".

When the system functions are called, the parameter **RECNUM is to be set to 100.**

If the logical address of the CBP is determined by means of SFC 5 "GADR_LGC", the parameters are to be provided with the following when SFC 5 is called:

SUBNETID	=	ID of the planned DP master system in accordance with the hardware configuration
RACK	=	Node / bus address of the CBP
SLOT	=	2
SUBSLOT	=	0
SUBADDR	=	0

The function-block package, DVA_S7 (see also section 8.2.7.2), is a standard method of data exchange between the SIMATIC S7 and the CBP via the acyclical MSAC_C1 channel. The user is provided with a data block as the data interface. This data block has a TRANSMIT MAILBOX and a RECEIVE MAILBOX, thus considerably reducing the expenditure on the application for the user.

8.2.2.4 Acyclical master class 2 - Configuration (DriveES)

MSAC_C2 channel for the Drive ES

The MSAC_C2 channel on the CBP must be reserved for the start-up and service tool Drive ES.

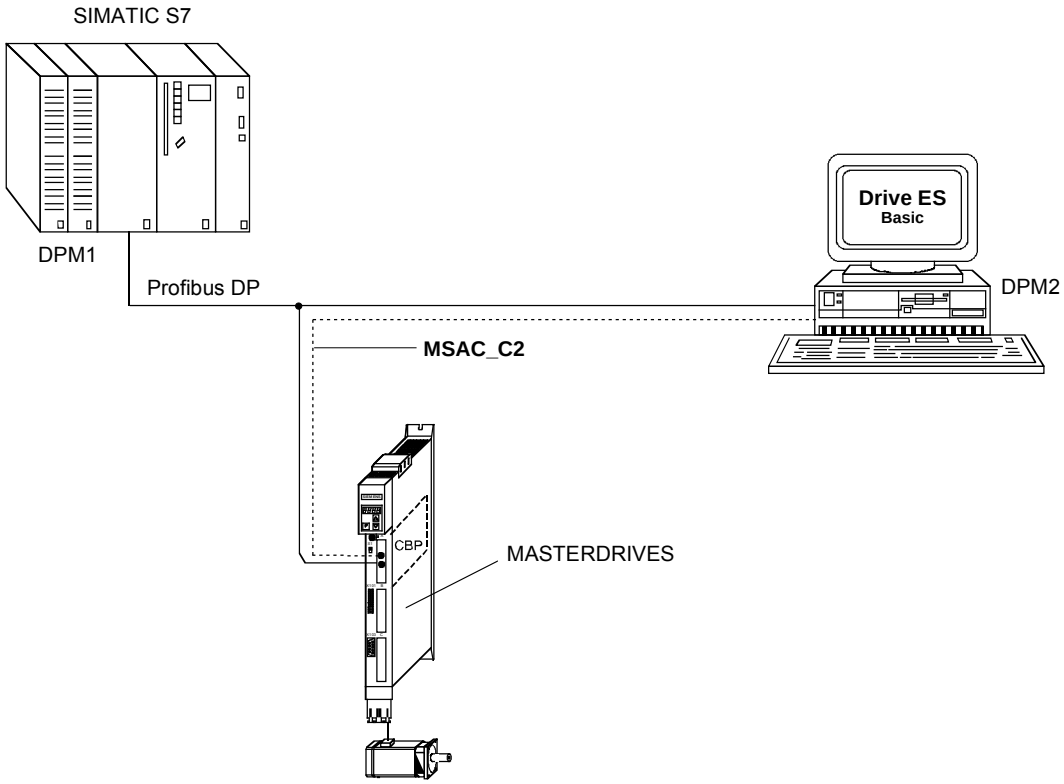

Fig. 8.2-7 Drive ES with Profibus

8.2.2.5 Acyclical master class 2 - Operator control (SIMATIC OP)

Functionality only with CBP2.

With a SIMATIC OP as the PROFIBUS DP master, you can achieve direct access to a drive.

A drive with a CBP2 behaves like a SIMATIC S7 towards a SIMATIC OP. For access to the drive parameters, the following simple illustration applies:

Parameter number = Data block number

Parameter subindex = Data block offset

All SIMATIC OPs and TDs with the final digit 7 are suitable.

ProTool

You can configure SIMATIC OP with "ProTool". The following specific settings for drives are to be entered during configuration with Pro Tool.

Open-loop control

Control units: Protocol always **"SIMATIC S7 - 300/400"**, additional parameters:

Field	**Value**
Network parameter - Profile	**DP**
Network parameter - Baud rate	(as selected)
Communications partner - Address	(the PROFIBUS address of the drive)
Communications partner - Slot/rack	Don't care, 0

Variable

Variables: "General" register:

Field	**Value**
Name	(as selected)
Control unit	(as selected)
Type	Depending on parameter value addresses, e.g.: **INT:** for I2, O2 **DINT:** for I4, O4 **WORD:** for V2, L2
Range	**DB**
DB (data block number)	Parameter number **1 to 3999**
DBB, DBW, DBD (data block offset)	Subindex **0:** for non-indexed parameters **1 to 101:** for indexed parameters
Length	(not activated)
Acquisition cycle	(as selected)
Number of elements	**1**
Places after the decimal point	(as selected)

NOTES

- You can operate a SIMATIC OP together with a drive, irrespective of any automation system which may be present. A simple "point-to-point" connection with only two nodes is possible.
- The "Variable" OP functions can be used for drives. Other functions cannot be used (e.g. "Messages" or "Recipes").
- Access is possible to individual parameter values. Access is not possible to whole arrays, descriptions or texts.
- The parameter values transferred to the OP are the non-standardized internal values of the drive. You can influence the value displayed on the OP with "Functions" in Pro Tool (e.g. "Linear conversion").
- The diagnostic output on the SIMATIC OP is limited. In the case of unsuccessful attempts at access, the CB diagnostic parameter, r732.22. and the following can help you further. See Section "Diagnosis and Troubleshooting".

8.2.3 Mechanisms for processing parameters via the PROFIBUS

Parameter area (PKW)

With the PKW mechanism (for PPO types 1, 2 and 5 and when the acyclical channels, MSAC_C1 and MSAC_C2, are used), you can perform the following tasks:

- Handling and visualizing parameters (read/write)
- Transferring and acknowledging parameter change reports (not realized)

The parameter area always contains at least 4 words.

	Parameter ID			(PKE)		1st word
Bit No.:	15 12		11	10	0	
	AK		SPM	PNU		

	Parameter index		(IND)	2nd word
Bit No.:	15 8	7	0	
	The structure and significance depend on the type of data transfer (see following pages)			

Parameter value	(PWE)	
Parameter value **High**	(PWE1)	3rd word
Parameter value **Low**	(PWE2)	4th word

AK: Task ID or reply ID

SPM: Toggle bit for processing the parameter change report

PNU: Parameter number

Table 8.2-3 Structure of the parameter area (PKW)

Parameter ID (PKE), 1st word

The parameter ID (PKE) is always a 16-bit value.

Bits 0 to 10 (PNU) contain the number of the required parameter.

Bit 11 (SPM) is the toggle bit for parameter change reports.

Bits 12 to 15 (AK) contain the task ID or the reply ID.

With regard to the task telegram (master → converter), the significance of the task ID is given in Table 8.2-4. Task IDs 10 to 15 are specifically for MASTERDRIVES and are not specified in the PROFIBUS-DP profile.

With regard to the reply telegram (converter → master), the significance of the reply ID is given in Table 8.2-5. Reply IDs 11 to 15 are specifically for MASTERDRIVES and are not specified in the PROFIBUS-DP profile. Only certain reply IDs are possible, depending on the task ID. If the reply ID has the value 7 (task cannot be executed), an error number is deposited in parameter value 2 (PWE2) in accordance with Table 8.2-6.

Task ID	Significance	Reply ID	
		positive	negative
0	No task	0	7 or 8
1	Request parameter value	1 or 2	↑
2	Change parameter value (word)	1	|
3	Change parameter value (double word)	2	|
4	Request description element [1]	3	|
5	Change description element (not with CBP)	3	|
6	Request parameter value (array) [1]	4 or 5	|
7	Change parameter value (array, word) [2]	4	|
8	Change parameter value (array, double word) [2]	5	|
9	Request the number of array elements	6	|
10	Reserved	-	|
11	Change parameter value (array, double word) and store in the EEPROM [2]	5	|
12	Change parameter value (array, word) and store in the EEPROM [2]	4	|
13	Change parameter value (double word) and store in the EEPROM	2	|
14	Change parameter value (word) and store in the EEPROM	1	↓
15	Read or change text (not with CBP)	15	7 or 8

Table 8.2-4 Task IDs (master -> converter)

Reply ID	Significance
0	No reply
1	Transfer parameter value (word)
2	Transfer parameter value (double word)
3	Transfer description element [1]
4	Transfer parameter value (array, word) [2]
5	Transfer parameter value (array, double word) [2]
6	Transfer the number of array elements
7	Task cannot be executed (with error number)
8	No operator change rights for the PKW interface
9	Parameter change report (word)
10	Parameter change report (double word)
11	Parameter change report (array, word) [2]
12	Parameter change report (array, double word) [2]
13	Reserved
14	Reserved
15	Transfer text (not with CBP)

[1] The required element of the parameter description is specified in IND (2nd word)

[2] The required element of the indexed parameter is specified in IND (2nd word)

Table 8.2-5 Reply IDs (converter -> master)

Example

Source for the ON/OFF1 command (control word 1, bit 0):
P554 (=22A Hex)

Change parameter value (array, word) and store in the EEPROM

	Parameter ID (PKE)				1st word
Bit No.:	15 12	11	10 0		
	AK	SPM	PNU		
	1 1 0 0	0	0 0 1 0	0 0 1 0	1 0 1 0	Binary value
	C	2	2	A	HEX value

- Bits 12 to 15: Value = 12 (= "C" Hex); change parameter value (array, word) and store in the EEPROM
- Bits 0 to 11: Value = 554 (= "22A" Hex); parameter number without set bit for the parameter change report

No.	Significance	
0	Non-admissible parameter No. (PNU)	If the PNU does not exist
1	Parameter value cannot be changed	If the parameter is a visualization parameter
2	Upper or lower limit exceeded	–
3	Erroneous subindex	–
4	No array	–
5	Incorrect data type	–
6	Setting not allowed (can only be reset)	–
7	Description element cannot be changed	Generally not possible for MASTERDRIVES
11	No operator control rights	–
12	Key word missing	Drive converter parameter "access key" and/or "parameter special access" not correctly set
15	No text array available	–
17	Task cannot be executed due to operating status	Drive converter status does not permit the present task
101	Parameter number deactivated at present	Specific to MASTERDRIVES
102	Channel width too small	Specific to MASTERDRIVES: only for short channels
103	Incorrect number of PKWs	Specific to MASTERDRIVES: only for G-SST1/2 and SCB interface (USS)
104	Parameter value not admissible	Specific to MASTERDRIVES
105	The parameter is indexed	e.g. task: "PWE, change word" for indexed parameters
106	Task not implemented	

Table 8.2-6 Error numbers for the reply "Task cannot be executed" (drive converter parameters)

Comment on error number 103

Error number 103 is only relevant to the G-SST1, 2 interface and the SCB interface. It is transferred in the following two cases:

- If the task involves indices of an indexed parameter (task index equal to 255) or the complete parameter description is requested and a variable telegram length has not been parameterized.
- If the set task is too small for the parameterized number of PKW data in the telegram (e.g. the double word and the PKW number is changed to 3 (words)).

Comment on error 104

This error number is transferred if the parameter value which is to be adopted has not been assigned a function in the drive converter or cannot be adopted at the time of the change for internal reasons (although it lies within the limits).
This error number always occurs, for example, when only values explicitly entered in a table are valid for a parameter value and are not transferred exactly (e.g. the number of PKW data for the USS interfaces for which only the explicit values 0, 3, 4 and 127 are allowed).

Parameter index (IND) 2nd word

The assignment of the index (**IND**) is to be regarded as a special feature or difference between what is specified in the PPOs and what is specified for the acyclical channels MSAC_C1 and MSAC_C2.

The array sub-index (also designated in shorter form as the sub-index in the PROFIBUS profile) is an 8-bit value and, during cyclical data transfer, is transferred in the most significant byte (bits 8 to 15) of the parameter index (IND). The least significant byte (bits 0 to 7) is not defined in the profile DVA. In the PPO of the CBP, the least significant byte of the parameter index is used in order to be able to address additional technology parameters or parameters of free components in the MASTERDRIVES by means of parameter page selection.

Structure of IND with cyclical communication by means of PPOs

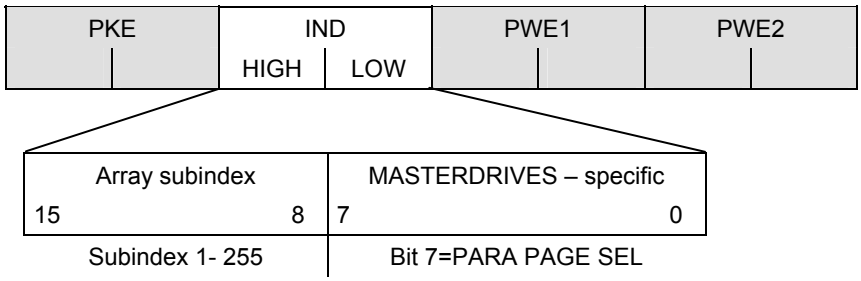

The array subindex is an 8-bit value and, with acyclical data transfer (MSAC_C1), is always transferred in the least significant byte (bits 0 to 7) of the parameter index (IND). The function of parameter-page selection for additional technology parameters or parameters of free components in the MASTERDRIVES is assumed here by the most significant byte (bits 8 to 15) of the parameter index. This structure corresponds to the stipulations of the USS specification.

Structure of IND with acyclical communication via MSAC_C1

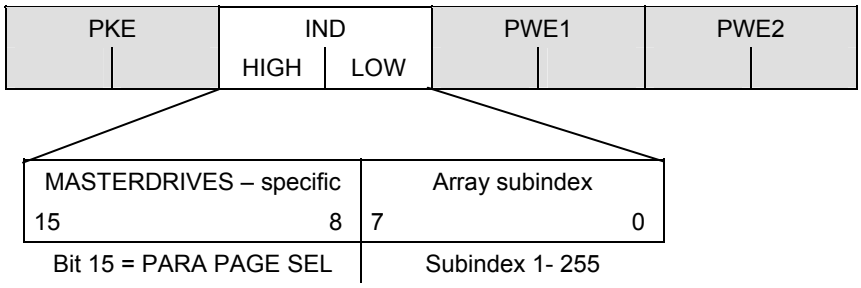

The function of the IND

For an indexed parameter, if the subindex in a task is transferred with the values between 1 and 254, the required index of the parameter is transferred. The significance of the individual indices of the parameter can be found in the "Parameter List" of the operating instructions for the converter.

When a description element is being processed, the number of the required element is transferred. The significance of the description elements is given in the PROFIBUS profile "Variable-speed drives", PROFIdrive version V2 (PNO: Order No. 3071).

The value 255 for the array subindex is of special importance. If the array subindex is transferred with 255, all indices of an indexed parameter are transferred simultaneously in one data block.

This function is useful only for acyclical data transfer via MSAC_C1. The transferred data block has the same structure as in the USS specification (see Fig. 8.2-7). The maximum size of a data block is 206 bytes.

The bit for parameter page selection has the following effect:

If this bit is equal to 1, the parameter number (PNU) transferred in the PKW task is provided with an offset of 2000 in the CBP and then passed on.

Parameter designation (acc. to parameter list)	Serial parameter number	Required addressing of the parameter via PROFIBUS		
		PNU [decimal]	PNU [hex.]	Bit *)
P000 - P999 (r000 - r999)	0 - 999	0 - 999	0 - 3E7	= 0
H000 - H999 (d000 - d999)	1000 - 1999	1000 -1999	3E8 - 7CF	= 0
U000 - U999 (n000 - n999)	2000 - 2999	0 - 999	0 - 3E7	= 1
L000 - L999 (c000 - c999)	3000 - 3999	1000 - 1999	3E8 - 7CF	= 1

*) Parameter page selection

Example

Source for the ON/OFF command (control word 1, bit 0):
P554 (=22A Hex)

Change parameter value of index 1 (structure of the IND according to PPO)

	Parameter index (IND)				2nd word
Bit No.:	15 ... 8	7 ... 0			
	0 0 0 0	0 0 0 1	0 0 0 0	0 0 0 0	Binary value
	0	1	0	0	HEX value

- Bits 8 to 15: Index of parameter P554
- Bits 0 to 7: Value = 0

Parameter value (PWE) 3rd and 4th words

The parameter value (PWE) is always transferred as a double word (32 bits). In a PPO telegram, only one parameter value can be transferred.

A 32-bit parameter value is composed of PWE1 (most significant word, 3rd word) and PWE2 (least significant word, 4th word).

A 16-bit parameter value is transferred in PWE2 (least significant word, 4th word). In this case, you must set PWE1 (most significant word, 3rd word) to 0 in the PROFIBUS-DP master.

Example for CUMC/ CUVC

Source for the ON/OFF command (control word 1, bit 0): P554 (= 22A Hex)

Change parameter value of index 1 to the value 3100

	Parameter value (PWE)					
Bit No.:	31 … 24		23 … 16		3rd word (PWE1)	(hex)
	0	0	0	0		
Bit No.:	15 … 8		7 … 0		4th word (PWE2)	(hex)
	3	1	0	0		

- Bits 0 to 15: Parameter value for 16-bit parameter or low component for 32-bit parameter
- Bits 16 to 31: Value = 0 for 1-bit parameter or high component for 32-bit parameter

Rules for task/reply processing

- A task or a reply can only relate to one parameter value.
- The master must repeat a task until it receives the appropriate reply.
- The master identifies the reply to a task which has been set:
  - By evaluating the reply ID
  - By evaluating the parameter number, PNU
  - If necessary, by evaluating the parameter index, IND
  - If necessary, by evaluating the parameter value, PWE.
- The task must be sent complete in one telegram; telegrams with split tasks are not permissible. The same applies to the reply.
- With regard to reply telegrams which contain parameter values (actual values), the slave (CBP) always replies with the latest current values if the telegram is repeated.
- If the PKW interface requires no information during cyclical operation (only PZD data are important), the "No task" task must be sent.

WARNING

When you change the initialization function of software version V1.3x to V1.40 and higher, or VC firmware from 3.22 to 3.23 and higher, the behavior of the converter also changes (reverting to the behavior of software versions V1.2x and lower again) as follows:

If the electronics supply is switched off on a converter that is in state "READY" and is connected to an automation system via a field bus (PROFIBUS, CAN, DEVICE-NET, or CC-Link), this causes a fault message for this converter in the automation system.
If the automation system nevertheless sends a control word STW1 with valid authorization (bit 10 = 1) and a pending ON command (bit 0 = 1) to this converter, this can cause the converter to switch on and go straight into "OPERATION" state when the electronics supply is connected at the converter.

8.2.4 PROFIdrive V3: Acyclic parameter accessing with data block 47

NOTE

Acyclic parameter accessing with data block 47 is supported by the CBP2 with firmware version V2.20 and later.

A detailed description of acyclic parameter accessing with data block 47 can be found in PROFIBUS Profiles, PROFIdrive (PNO: Order No. 3172).

General properties

- Compatibility with PKW tasks in accordance with PROFIdrive profile version 2
- 16-bit wide address for each parameter number and subindex
- Transfer of complete arrays or areas thereof, or the entire parameter description
- Transfer of different parameters in one access operation (multi-parameter tasks)
- Only **one** parameter task is processed at a time (no pipelining)
- A parameter task/response must fit into one data block (max. 240 bytes). Tasks/responses are **not split** over several data blocks. The maximum length of data blocks can be less than 240 bytes as a result of slave property or bus configuration.
- **"Multi-parameter"** tasks are defined for optimized, simultaneous access to different parameters (e.g. HMI screen contents).
- Data block 47 can be processed by acyclical channels MSAC_C1 and MSAC_C2.

Subindex 0

The definition of an array has been changed in IEC 61158 as compared to the definition in EN 50170.

The PROFIdrive profile version 2 is compliant with EN 50 170, according to which the subindex of an indexed parameter or array begins with index 1. In the current IEC standard 61158, access to an indexed parameter or array begins with the index 0.

As a consequence, the parameter model and the DPV1 parameter channel had to be adapted in PROFIdrive profile version 3 so as to ensure compliance with the IEC standard.

Compatibility with the PKW mechanism in PROFIdrive profile version 2

MASTERDRIVES still utilizes the parameter model to PROFIdrive V2 on its internal interface. MASTERDRIVES can be accessed via data block 47 as a DPV1 client with the CBP2. For tasks using DB47, the CBP2 thus adds an offset of 1 to the parameter subindex.

Cyclical parameter accessing via PKW and acyclical parameter accessing using data block 100 can still be utilized as before.

MASTERDRIVES MC with parameter model to PROFIdrive profile version 2. In combination with the CBP2, DPV1 can be utilized in accordance with PROFIdrive profile version 3.

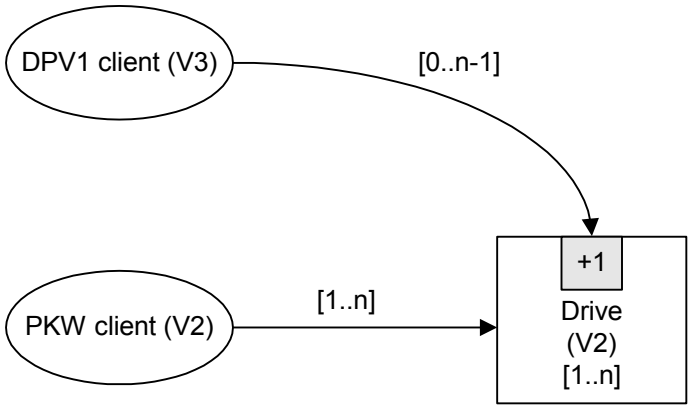

Special features / restrictions

- Access operations to simple parameters (i.e. parameters without indices) must be identified by "No. of elements" = 0.
- Changing the sub-areas of an array is not supported by the CBP2, in other words, it is possible to transfer a write task either for one index or for all indices. To alter a complete parameter array, the number of values must be equal to or greater than the array size.
- The editing of texts or descriptions is not supported.
- Reading of several or all texts from a text array via a parameter task is not supported, i.e. only one text from one text array (subindex) can be read with one parameter task.

8.2.4.1 Comparison between parameter tasks to PROFIdrive version 2 and 3

	PKW to PROFIdrive profile V2	DPV1 parameter tasks to PROFIdrive profile V3	Remarks
Task reference	-	New! 8-bit	Task/response identification
Task identifier	Request/change value/des./texts 4-bit	Request/change 8-bit	Distinction value/description/text as additional attribute
No. of parameters	-	New! 8-bit	Multi-parameter tasks
Parameter number	0..1999 (11 bits)	Content as for PKW 16-bit	Parameter number = 0 not allowed
Subindex	1..255 (8 bits)	Content as for PKW - 1 16-bit	Offset in subindex due to modified array definition: DPV1 subindex = PKW subindex – 1
No. of elements	- (always "1")	New 8-bit	Access to simple parameters (nonindexed parameters) is defined in DB47 with "No. of elements" = 0.
Attribute	-	New 8-bit	Distinction value/description/text
Total length	2 words	5 words	

8.2.4.2 Example of "Request parameter value", simple

Parameter task:

			Offset
Task header	Task reference	Task identifier = Request parameter	0
	Axis = 0	No. of parameters = 1	2
Parameter address	Attribute = value	No. of elements = 0 (!)	4
	Parameter number		
	Subindex = 0 (don't care)		
			10

Positive parameter response with word:

Response header	Task ref. mirrored	Response identifier = Request parameter (+)	0
	Axis mirrored	No. of parameters = 1	2
Parameter value	Format = word	No. of values = 1	4
	Value		6
			8

Positive parameter response with double word:

Response header	Task ref. mirrored	Response identifier = Request parameter (+)	0
	Axis mirrored	No. of parameters = 1	2
Parameter value	Format = double word	No. of values = 1	4
	Value		6
			10

Negative parameter response:

Response header	Task ref. mirrored	Response identifier = Request parameter (-)	0
	Axis mirrored	No. of parameters = 1	2
Parameter value	Format = error	No. of values = 1	4
	Error value		6
			8

8.2.4.3 Example of "Change parameter value", simple

Parameter task:

			Offset
Task header	Task reference	Task identifier = Change parameter	0
	Axis = 0	No. of parameters = 1	2
Parameter address	Attribute = value	No. of elements = 0 (!)	4
	Parameter number		
	Subindex = 0 (don't care)		
Parameter value	Format = word	No. of values = 1	10
	Value		12
			14

Positive parameter response:

Response header	Task ref. mirrored	Response identifier = Change parameter (+)	0
	Axis mirrored	No. of parameters = 1	2
			4

Negative parameter response:

Response header	Task ref. mirrored	Response identifier = Change parameter (-)	0
	Axis mirrored	No. of parameters = 1	2
Parameter value	Format = error	No. of values = 1	4
	Error value		6
			8

8.2.4.4 Example of "Request parameter value", more than one array element

Parameter task:

			Offset
Task header	Task reference	Task identifier = Request parameter	0
	Axis = 0	No. of parameters = 1	2
Parameter address	Attribute = value	No. of elements = 5	4
	Parameter number		
	Subindex = 0		
			10

Positive parameter response:

Response header	Task ref. mirrored	Response identifier = Request parameter (+)	0
	Axis mirrored	No. of parameters = 1	2
Parameter value	Format = word	No. of values = 5	4
	Value 1		6
	Value 2		
	Value 3		
	Value 4		
	Value 5		
			16

Negative parameter response:

Response header	Task ref. mirrored	Response identifier = Request parameter (-)	0
	Axis mirrored	No. of parameters = 1	2
Parameter value	Format = error	No. of values = 1	4
	Error value		6
			8

8.2.4.5 Example of "Change parameter value", more than one array element

NOTE

Changing the sub-areas of an array is not supported by the CBP2, in other words, it is possible to transfer a write task either for one index or for all indices. To alter a complete parameter array, the number of values must be equal to or greater than the array size.

The following example shows a write operation to one parameter with 5 subindices.

Parameter task:

			Offset
Task header	Task reference	Task identifier = Change parameter	0
	Axis = 0	No. of parameters = 1	2
Parameter address	Attribute = value	No. of elements = 5	4
	Parameter number		
	Subindex = 0		
Parameter value	Format = word	No. of values = 5	10
	Value 1		12
	Value 2		
	Value 3		
	Value 4		
	Value 5		
			22

Positive parameter response:

Response header	Task ref. mirrored	Response identifier = Change parameter (+)	0
	Axis mirrored	No. of parameters = 1	2
			4

Negative parameter response:

Response header	Task ref. mirrored	Response identifier = Change parameter (-)	0
	Axis mirrored	No. of parameters = 1	2
Parameter value	Format = error	No. of values = 1	4
	Error value		6
			8

8.2.4.6 Example of "Request parameter value", multi-parameter

Parameter task:

			Offset
Task header	Task reference	Task identifier = Request parameter	0
	Axis = 0	No. of parameters = 3	2
1st parameter address	Attribute = value	No. of elements = 1	4
	Parameter number		
	Subindex = 7		
2nd parameter address	Attribute = value	No. of elements = 100	10
	Parameter number		
	Subindex = 0		
3rd parameter address	Attribute = value	No. of elements = 2	16
	Parameter number		
	Subindex = 13		
			22

Parameter response (+): All part accesses o.k.

Response header	Task ref. mirrored	Response identifier = Request parameter (+)	0
	Axis mirrored	No. of parameters = 3	2
1st parameter value(s)	Format = word	No. of values = 1	4
	Value		6
2nd parameter value(s)	Format = word	No. of values = 100	8
	Value 1		10
	Value 2		
	...		
	Value 100		
3rd parameter value(s)	Format = double word	No. of values = 2	210
	Value1		212
	Value2		
			220

Parameter response (-): First and third part access o.k., second part access errored

Response header	Task ref. mirrored	Response identifier = Request parameter (-)	0
	Axis mirrored	No. of parameters = 3	2
1st parameter value(s)	Format = word	No. of values = 1	4
	Value		6
2nd parameter value(s)	Format = error	No. of values = 1	8
	Error value		10
3rd parameter value(s)	Format = double word	No. of values = 2	12
	Value1		14
	Value2		
			22

8.2.4.7 Example of "Change parameter value", multi-parameter

Parameter task:

			Offset
Task header	Task reference	Task identifier = Change parameter	0
	Axis = 0	No. of parameters = 3	2
1st parameter address	Attribute = value	No. of elements = 1	4
	Parameter number		
	Subindex = 7		
2nd parameter address	Attribute = value	No. of elements = 100	10
	Parameter number		
	Subindex = 0		
3rd parameter address	Attribute = value	No. of elements = 2	16
	Parameter number		
	Subindex = 0		
1st parameter value(s)	Format = word	No. of values = 1	22
	Value		24
2nd parameter value(s)	Format = word	No. of values = 100	26
	Value 1		28
	Value 2		
	...		
	Value 100		
3rd parameter value(s)	Format = double word	No. of values = 2	228
	Value1		230
	Value2		
			238

Parameter response (+): All part access o.k.

Response header	Task ref. mirrored	Response identifier = Change parameter (+)	0
	Axis mirrored	No. of parameters = 3	2
			4

Parameter response (-): First and third part access o.k., second part access errored

Response header	Task ref. mirrored	Response identifier = Change parameter (-)	0
	Axis mirrored	No. of parameters = 3	2
1st parameter value(e)	Format = zero	No. of values = 0	4
2nd parameter value(e)	Format = error	No. of values = 2	6
	Error value		8
	Errored subindex		10
3rd parameter value(e)	Format = zero	No. of values = 0	12
			14

8.2.4.8 Request description, individual

Parameter task:

			Offset
Task header	Task reference	Task identifier = Request parameter	0
	Axis = 0	No. of parameters = 1	2
Parameter address	Attribute = description	No. of elements = 1	4
	Parameter number		
	Subindex = n		
			10

Positive parameter response with word (e.g. ID code):

Response header	Task ref. mirrored	Response identifier = Request parameter (+)	0
	Axis mirrored	No. of parameters = 1	2
Parameter value	Format = word	No. of values = 1	4
	Value		6
			8

Positive parameter response with text:

Response header	Task ref. mirrored	Response identifier = Request parameter (+)	0
	Axis mirrored	No. of parameters = 1	2
Parameter value	Format = byte	No. of values = 16	4
	Byte 1	Byte 2	6
	...	...	
	Byte 15	Byte 16	
			22

Negative parameter response:

Response header	Task ref. mirrored	Response identifier = Request parameter (-)	0
	Axis mirrored	No. of parameters = 1	2
Parameter value	Format = error	No. of values = 1	4
	Error value		6
			8

8.2.4.9 Request description, total

Parameter task:

			Offset
Task header	Task reference	Task identifier = Request parameter	0
	Axis = 0	No. of parameters = 1	2
Parameter address	Attribute = description	No. of elements = 0 (don't care)	4
	Parameter number		
	Subindex = 0 (!)		
			10

Positive parameter response:

Response header	Task ref. mirrored	Response identifier = Request parameter (+)	0
	Axis mirrored	No. of parameters = 1	2
Parameter value	Format = byte	No. of values = (Bytes)	4
	ID code		6
	(etc.)		
	...		
	...	...	
			6 + description

Negative parameter response:

Response header	Task ref. mirrored	Response identifier = Request parameter (-)	0
	Axis mirrored	No. of parameters = 1	2
Parameter value	Format = error	No. of values = 1	4
	Error value		6
			8

8.2.4.10 Request text, individual

Parameter task:

			Offset
Task header	Task reference	Task identifier = Request parameter	0
	Axis = 0	No. of parameters = 1	2
Parameter address	Attribute = text	No. of elements = 1	4
	Parameter number		
	Subindex = n		
			10

Positive parameter response:

Response header	Task ref. mirrored	Response identifier = Request parameter (+)	0
	Axis mirrored	No. of parameters = 1	2
Parameter value	Format = byte	No. of values = 16	4
	Byte 1	Byte 2	6
	...	...	
	Byte 15	Byte 16	
			22

Negative parameter response:

Response header	Task ref. mirrored	Response identifier = Request parameter (-)	0
	Axis mirrored	No. of parameters = 1	2
Parameter value	Format = error	No. of values = 1	4
	Error value		6
			8

8.2.5 Mounting methods / CBP slots

NOTE

The CBP can be directly built into Compact PLUS units. In all other types of unit in this series, it is mounted on the CUMC or CUVC or it can be connected in the electronics box with an adaptation board.

8.2.5.1 CBP mounting slots in MC Compact PLUS units

NOTE

You can mount the CBP optional board (Communications board PROFIBUS) in any slot. Bear in mind, however, that an encoder board always needs slot C.

Position of the slots

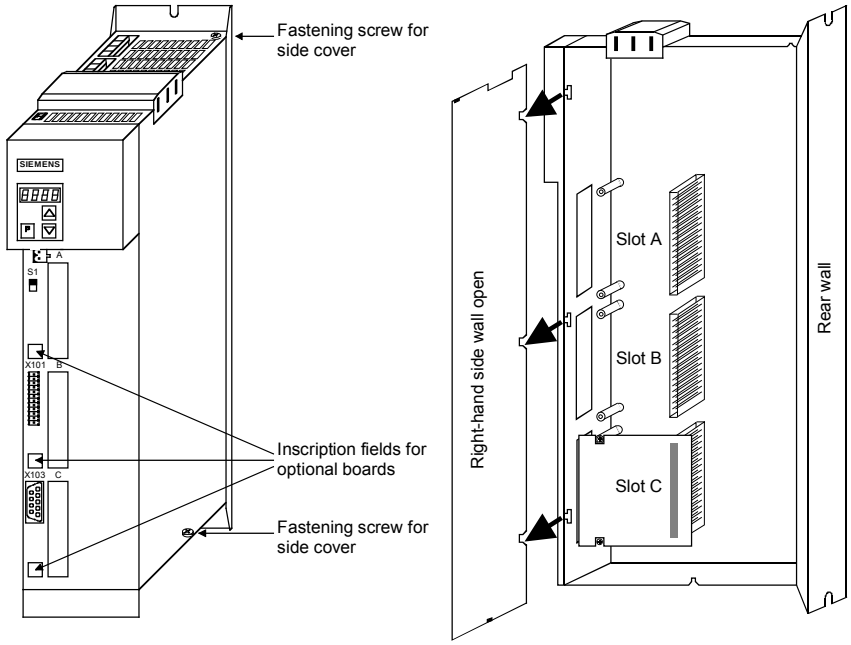

Fig. 8.2-8 Position of the slots (with side wall on the right removed)

DANGER

Due to the DC link capacitors, hazardous voltages are still present in the converter up to 5 minutes after it has been disconnected from the power supply. Before opening the converter, wait until the capacitors have completely discharged.

A maximum of two CBPs can be operated in the Compact PLUS type unit. The following configurations are defined (see function diagrams in Chapter 12):

- If two CBPs are inserted, the CBP which is inserted into the slot with the lower slot letter is considered the **first** CB/TB.
- If two CBPs are inserted, the CBP which is inserted into the slot with the higher slot letter is considered the **second** CB/TB.

8.2.5.2 CBP slots in Compact units and chassis-type units with the CUs of function classes Motion Control (CUMC) and Vector Control (CUVC)

Slots

In the electronics box of Compact and chassis-type converters and inverters, there are up to six slots available for mounting an optional board. The slots are designated with the letters A to G. There is no slot B, however, in these types of unit; it is only used in Compact PLUS type units.

If you wish to use slots D to G, you must first mount the LBA (Local Bus Adapter, Order No. 6SE7090-0XX84-4HA0) and the corresponding adaption board ADB (Order No. 6SX7010-0KA00).

NOTE

You can operate the CBP optional board (Communications board PROFIBUS) in any slot. Bear in mind, however, that an encoder board always needs slot C and that the LBA has to use a particular sequence of slots.

The CBP can be mounted on the adaptation board in both slots, i.e. at the BOTTOM and/or at the TOP.

Position of the slots

The slots are located at the following positions:

- Slot A CU board Top
- Slot C CU board Bottom
- Slot D Adaptation board in mount. pos. 2 Top
- Slot E Adaptation board in mount. pos. 2 Bottom
- Slot F Adaptation board in mount. pos. 3 Top
- Slot G Adaptation board in mount. pos. 3 Bottom

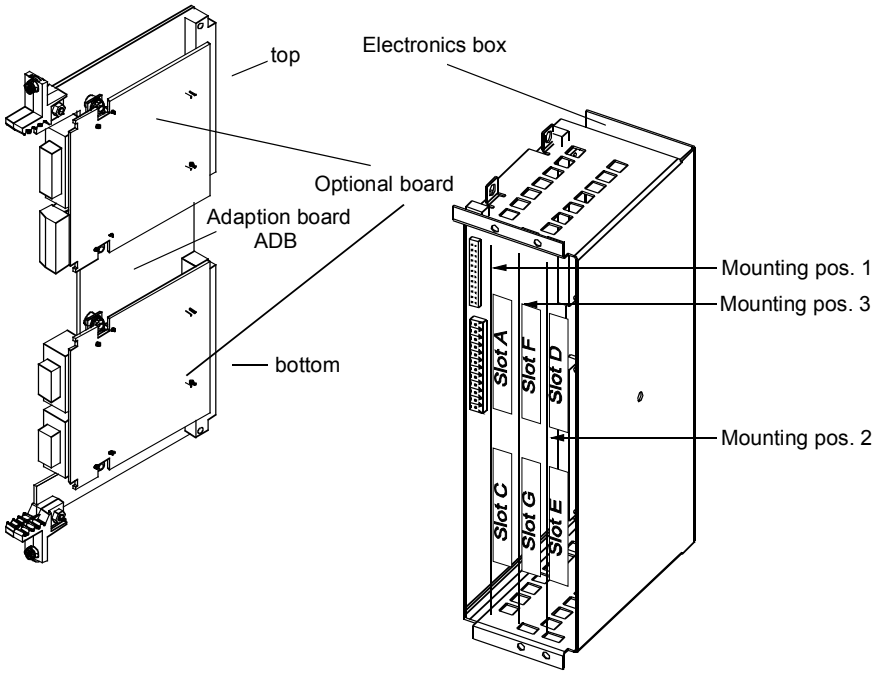

Fig. 8.2-9 Adaptation board with optional boards and position of the slots for Compact units and chassis-type units

DANGER

Due to the DC link capacitors, hazardous voltages are still present in the converter up to 5 minutes after it has been disconnected from the power supply. Before opening the converter, wait until the capacitors have completely discharged.

For technical reasons, certain sequences for using the slots are stipulated for the LBA.

If only one adaptation board with optional boards is inserted in the electronics box, it must always be inserted in slot +1.B2 (ON THE RIGHT), i.e. mounting position 2.

If a technology board T100 / T300 or T 400 is inserted in the electronics box in addition to the adaptation board with CBP, it must be inserted in slot +1.B2 (mounting position 2). In this case, the adaptation board with CBP is inserted in slot +1.B3 (mounting position 3).

A maximum of either two CBPs or one CBP plus one T100/T300/T400 technology board can be operated in the electronics box of the converter. The following configurations are defined (see function diagrams in Chapter 12):

- The CBP is regarded as the first CB/TB if one of the following configurations exist:
  - Exactly one CBP is inserted in slots A to G on the electronics box and no T100/T300/T400 technology board is inserted.
  - If two CBPs are inserted, the CBP which is inserted in the slot with the lower slot letter.
- The CBP is regarded as the second CB/TB if one of the following configurations is present:
  - A T100/T300/T400 technology board is inserted and the CBP in the electronics box is inserted in slots A to G.
  - In the case of two CBPs, the one inserted in the slot with the higher slot letter.

8.2.5.3 CBP slots in Compact and chassis-type units with the CUs of function classes FC (CU1), VC (CU2) or SC (CU3)

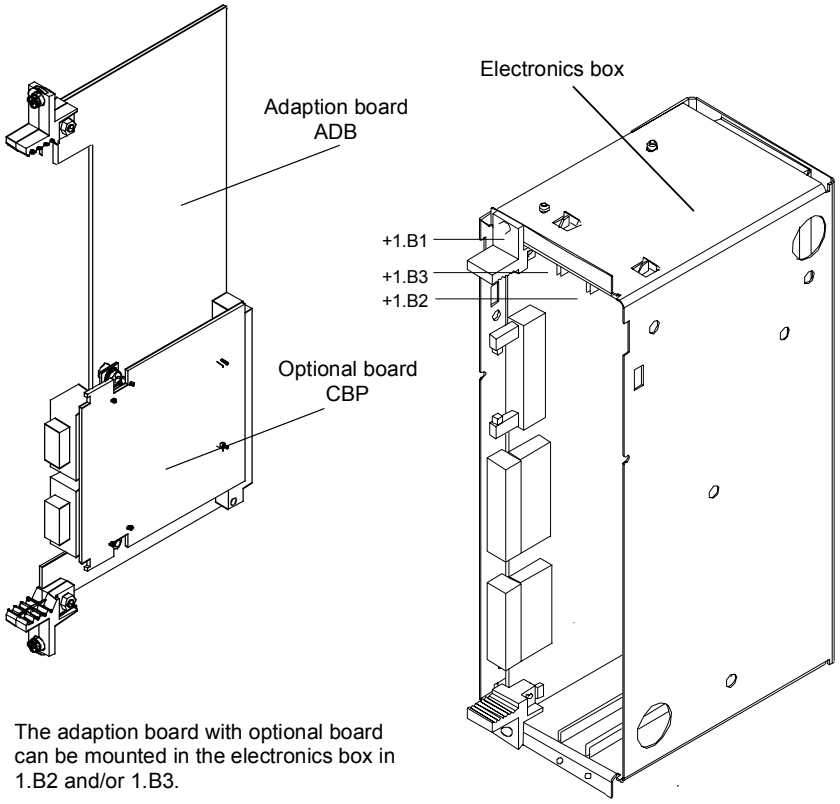

Fig. 8.2-10 Electronics box with free slots (+1.B2 and +1.B3) and adaptation board with CBP

On the adaptation board ADB (Order No. 6SX7010-0KA00), **only one** CBP can be mounted in slot X198, i.e. at the BOTTOM.

If the CBP is mounted with adaptation board, the LBA (Local Bus Adapter, LBA, Order No. 6SE7090-0XX84-4HA0) must first be mounted.

NOTE

If only one optional board is used, it must always be inserted in slot +1.B2 (on the RIGHT) in the electronics box.

If, in addition to the CBP, a technology board (T100 / T300 or T400) is inserted in the electronics box, it must be inserted in slot +1.B2. In this case, the CBP is inserted in slot +1.B3.

8.2.6 Connecting up the CBP to the PROFIBUS

8.2.6.1 Assignment of plug-in connector X448

Connecting up

The CBP optional board has a 9-pin Sub-D socket (X448) which is provided for connecting the CBP to the PROFIBUS system. The connections are short-circuit proof and floating.

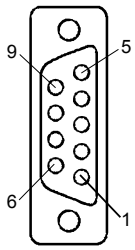

Pin	Designation	Significance	Area
1	SHIELD	Ground connection	
2	-	Not connected	
3	RxD/TxD-P	Receive/transmit data P (B/B´)	RS485
4	CNTR-P	Control signal	TTL
5	DGND	PROFIBUS data reference potential (C/C´)	
6	VP	Power supply Plus	5 V ± 10 %
7	-	Not connected	
8	RxD/TxD-N	Receive/transmit data N (A/A´)	RS485
9	-	Reference filtered	M_EXT

Table 8.2-7 Pin assignment of X448 connection

8.2.6.2 Connecting up the bus cable by means of the RS485 bus connecting system

With the PROFIBUS, data transfer according to RS485 is most frequently used. A twisted, shielded copper cable with one pair of wires is used.

Up to a maximum of 124 units can be connected to a PROFIBUS phase. In one bus segment, up to 32 units can be connected together in a linear structure. If there are more than 32 nodes, repeaters (power amplifiers) must be used in order to link up the individual bus segments.

Maximum cable lengths

The maximum cable length depends on the baud rate (transmission speed).

The maximum cable length can be increased by using repeaters but no more than three repeaters may be connected in series.

The maximum cable lengths given in the following table can only be ensured if PROFIBUS bus cables are used (e.g. Siemens PROFIBUS-cable with MRPD 6XV 1830-0AH10).

Baud rate	Max. cable length in a segment [m]	Max. distance between 2 stations [m]
9.6 to 187.5 kbaud	1000	10000
500 kbaud	400	4000
1.5 Mbaud	200	2000
3 to 12 Mbaud	100	1000

Table 8.2-8 Permissible cable length of a segment with RS485 repeaters

Rules for laying cables

When you are laying the bus cable, you must not:

- twist it
- stretch it
- or squash it

In addition to this, you must take into account any influences on electromagnetic compatibility (EMC).

For further information, see for example Chapter 3 of the Compendium or the description "Instructions for Design of Drives in Conformance with EMC Regulations" (Order No. 6SE7087-6CX87-8CE0).

Bus connectors

You need bus connectors in order to connect the PROFIBUS to a CBP. There are different types of bus connector with degree of protection IP20. Their different uses are shown in the table below.

Order No.	6ES7 972-0BA11-0XA0 6ES7 972-0BB11-0XA0	6ES7 972-0BA40-0XA0 6ES7 972-0BB40-0XA0
Appearance	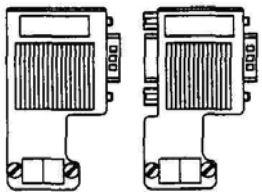	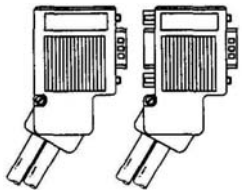
PG socket	0BA11: no 0BB11: yes	0BA40: no 0BB40: yes
Max. baud rate	12 Mbaud	12 Mbaud
Terminating resistor	Can be connected as required	Can be connected as required
Outgoing cable	Vertical	slanting
Interfaces • PROFIBUS nodes • PROFIBUS cable	• 9-pole Sub-D socket • 4 terminal blocks for wires up to 1.5 mm^2	• 9-pole Sub-D socket • 4 terminal blocks for wires up to 1.5 mm^2
Connectable diameter of PROFIBUS cable	8 ± 0.5 mm	8 ± 0.5 mm
Recommended for • **IM 308-B** • **IM 308-C** • **S5-95U** • **S7-300** • **S7-400** • **M7-300** • **M7-400** • **CBP**	● ● ● ● ● ●	 ● ● ● ●

Table 8.2-9 Structure and application of bus connectors with IP20 protection

For more information on ordering and additional descriptions, see the A&D AS catalog "Industrial Communication" IK 10 (Order No. E86060-K6710-A101-A6).

Installing the bus cable

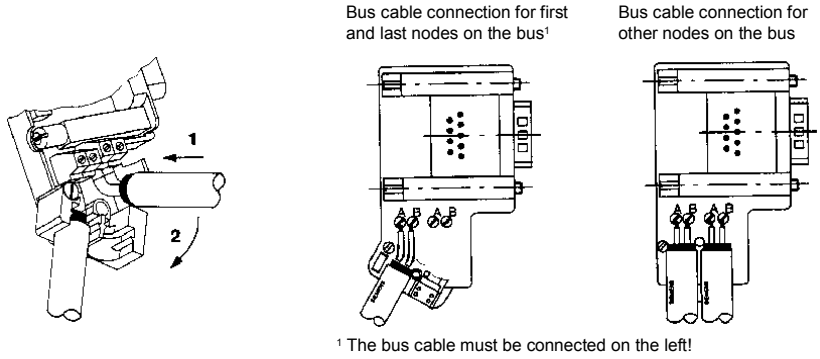

Fig. 8.2-11 Connecting up the bus cable to the bus connector

Bus termination

Each bus segment must be fitted with a resistor network, the bus termination, at each end.

If the recommended bus connectors can be used, the bus termination can be connected or disconnected by means of switches.

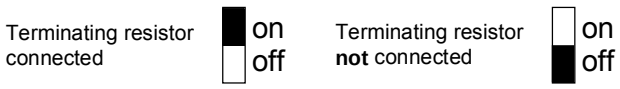

Fig. 8.2-12 Switch positions for connected or disconnected bus termination resistor

If these bus connectors are not used, the user must ensure installation of a bus termination network at the first and last bus station in accordance with the following illustration.

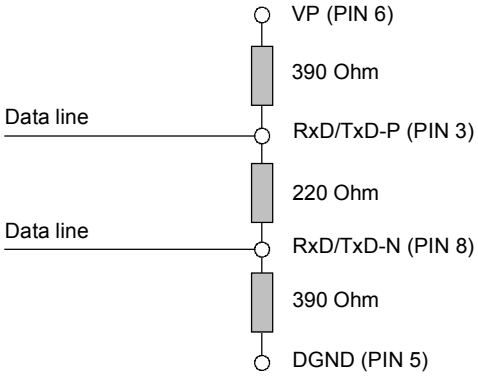

Fig. 8.2-13 Bus termination network

NOTICE

A bus segment must always be terminated at both ends with a matching resistor. This is not the case, for example, if the last slave with bus connector is not live. Because the bus connector obtains its voltage from the station, the matching resistor has no effect.

Make sure that the stations at which the matching resistor is connected is always supplied with voltage.

Pulling out the bus connector

You can pull out the bus connector with looped-through bus cable from the PROFIBUS-DP interface at any time without interrupting data transfer on the bus.

Connection example

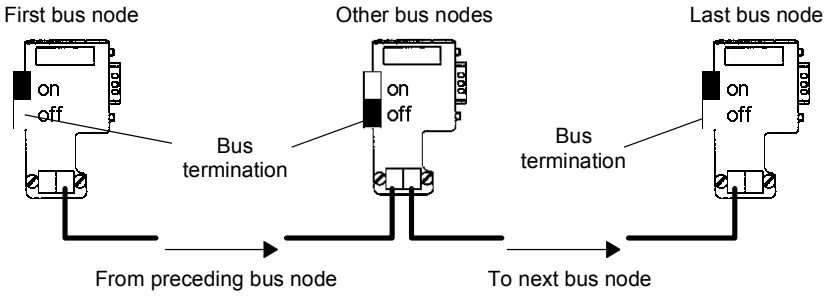

Fig. 8.2-14 Bus segment in linear structure (max. 32 stations per segment)

8.2.6.3 Connecting the bus cable with the fiber-optic cable system

For applications in an environment which is subjected to a high level of interference, fiber-optic cables can also be used with the PROFIBUS-DP. The specification of fiber-optic-cable transmission is defined in PROFIBUS guideline No. 2.021.

For connecting fiber-optic cables to the CBP, an OLP (Optical Link Plug) can be used which provides integrated conversion of the RS485 signals in fiber-optic cables and vice versa.

Area of application

With the optical link plugs (OLPs), optical PROFIBUS networks in ring form can easily be created (single-fiber ring with plastic fiber-optic cables).

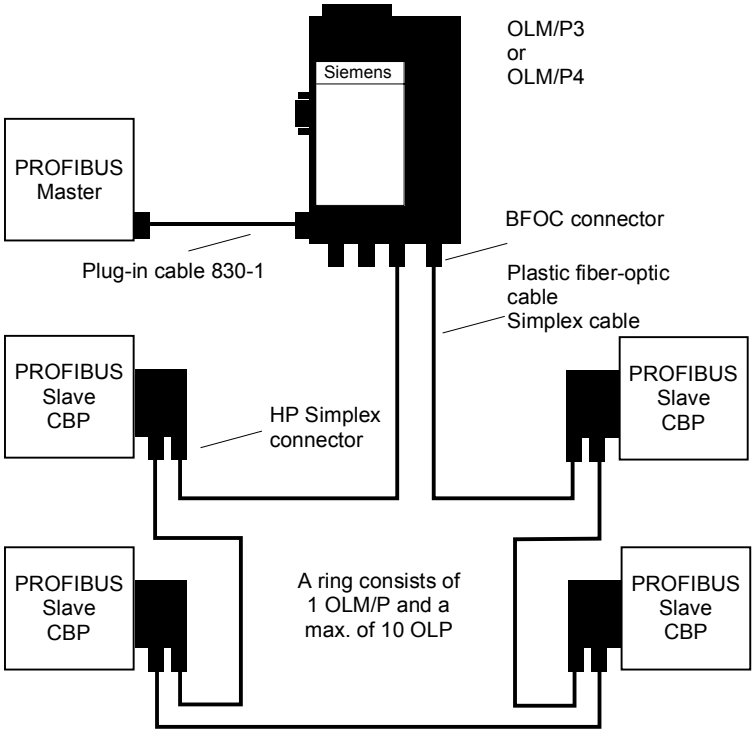

Fig. 8.2-15 Example of a system configuration with OLPs

The OLP can be directly plugged into the 9-pole SUB-D socket of the CBP. Power is supplied to the OLP via the 9-pole SUB-D connector of the CBP.

The transmission reliability of PROFIBUS networks is greatly increased by using fiber-optic cable instead of twisted two-wire cable. As a result, the network is insensitive to interference due to EMC problems or overvoltages.

Considerable cost savings are achieved by using plastic fiber-optic cables which are also easy to fit. Additional grounding is no longer necessary either.

Functions

- Connection of a PROFIBUS slave to an optical single-fiber ring
- Cable length between 2 OLPs with plastic fiber-optic cable from 1 m to 25 m
- Maximum circumference of a single-fiber ring: 275 m
- Transmission rate of 93.75 kbit/s to 1.5 Mbit/s; can be adjusted by means of plug-in jumpers (this can be checked through inspection windows in the connector housing)
- OLP single-fiber rings can be integrated in PROFIBUS networks by means of OLM/Ps

Requirements for use

- One OLM/P per single-fiber ring is necessary as a coordinator.

Ordering data

OLP / OLM for PROFIBUS	Order No.
OLP Optical link plug for creating optical single-fiber rings with plastic fiber-optic cables; including 2 HP Simplex connectors and mounting instructions	6GK1 502-1AA00
OLM/P3 Optical link module for plastic fiber-optic cables, 3-channel version with signaling contact, including 2 BF OC connectors	6GK1 502-3AA10
OLM/P4 Optical link module for plastic fiber-optic cables, 4-channel version with signaling contact, including 4 BFOC-connectors	6GK1 502-4AA10

For more information on ordering and additional descriptions, see the A&D AS catalog "Industrial Communication" IK 10 (Order No. E86060-K6710-A101-A6).

8.2.6.4 Shielding of the bus cable / EMC measures

In order to ensure interference-free operation of the PROFIBUS-DP, especially in the case of data transmission with RS485, the following measures are imperative:

Shielding

- For the PROFIBUS bus cable, the shield in the bus connector should be connected to the CBP. Shielding is also provided by the shield clamps (in the event of Compact units) or by the shield clamps and cable ties (in the event of chassis-type units) on the converter housing. The following illustrations show you how to use the shield clamps. When removing the insulation from the various core ends, please ensure that the solid copper core is not damaged.
- Please ensure that the shield of each bus cable is connected to protective earth, both where it enters the cabinet as well as at the converter housing.

NOTE

Bus cables are to be laid at an angle of 90 ° to power cables if it is necessary that the two kinds of cable intersect.

NOTE

The bus cables must be twisted and shielded and are to be laid separately from the power cables at a minimum distance of 20 cm. The braided shield and, if necessary, the underlying foil shield as well, are to be connected on both sides through a large surface area so that they are highly conductive, i.e. the shield of the bus cable between two converters is to be connected to the converter housing at both ends of the cable. The same applies to the shielding of the bus cable between the PROFIBUS-DP master and the converters.

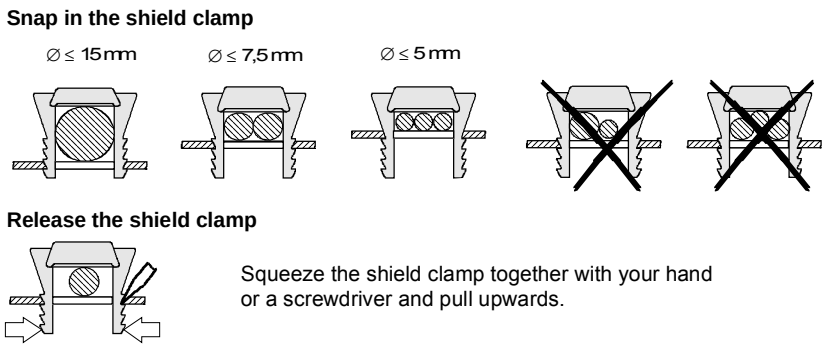

Fig. 8.2-16 Using the shield clamps

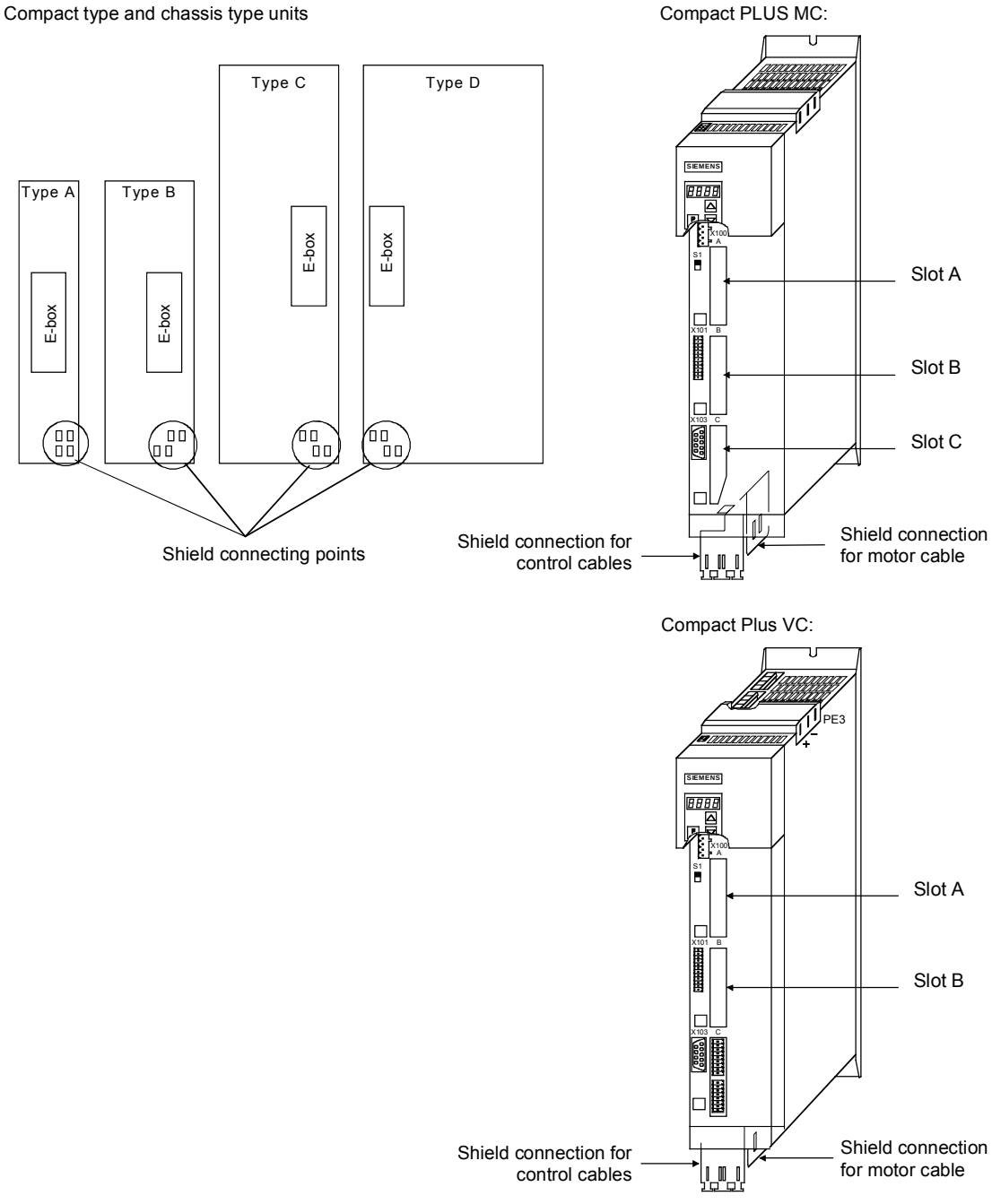

Fig. 8.2-17 Position of the shield connecting points

If so many control cables are used that two shield clamps are insufficient, the "EMC shielded housing" option is to be used.

Potential equalization

- Please avoid differences in potential (e.g. as a result of different power supply levels) between the converters and the PROFIBUS-DP master.
- Use equipotential bonding cables:
  - 16 mm^2 Cu equipotential bonding cables up to 200 m
  - 25 mm^2 Cu equipotential bonding cables over 200 m
- Route the equipotential bonding cables so that there is the smallest possible surface between the equipotential bonding cables and signal cables.
- Connect equipotential bonding cables to the ground/protective conductor through the largest possible surface area.

Laying cables

Instructions for laying cables:

- Bus cables (signal cables) must not be laid close to and parallel to power cables.
- Signal cables and the associated equipotential-bonding cables must be laid as closely together as possible and kept as short as possible.
- Power cables and signal cables must be laid in separate cable ducts.
- Shields must be connected through the largest possible surface area.

For more information on electromagnetically compatible installation of systems, see for example Chapter 3 of the Compendium or the description "Instructions for Design of Drives in Conformance with EMC Regulations" (Order No. 6SE7087-6CX87-8CE0).

8.2.7 Starting up the CBP

NOTE

With regard to basic parameterization, please note the differences to the types of unit with the older function classes FC (CU1), VC (CU2) and SC (CU3). These differences are described below.

In order to make these differences clear, the parameter numbers and other deviations are either printed in dark gray or have a dark-gray background.

8.2.7.1 Basic parameterization

NOTE

For the CBP optional board, it is not necessary to adjust the baud rate.

Basic parameterization with Compact PLUS, CUMC and CUVC

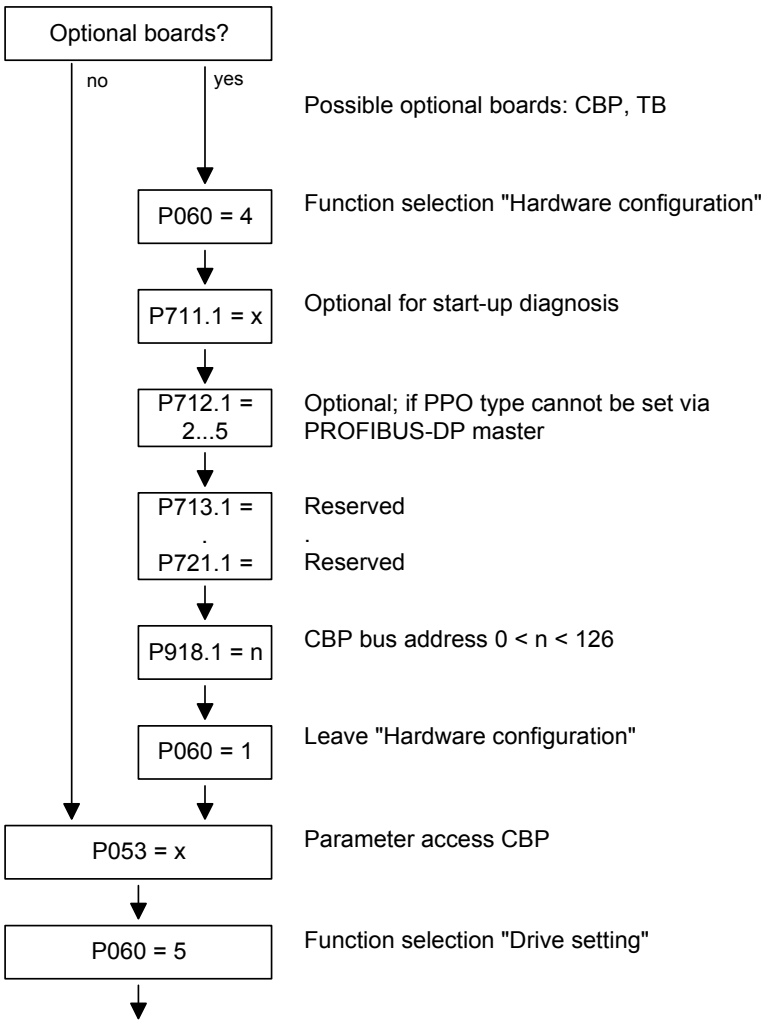

Fig. 8.2-18 Parameterization of "Hardware configuration" for Compact PLUS, CUMC and CUVC

In the case of MASTERDRIVES MC (CUMC) and MC+ (Compact+) from firmware version V1.4 onwards, the CB parameters P918 and P711 to P721 can also be changed in the "Drive setting" status (P060 = 5).

Basic parameterization for FC (CU1), VC (CU2) and SC (CU3)

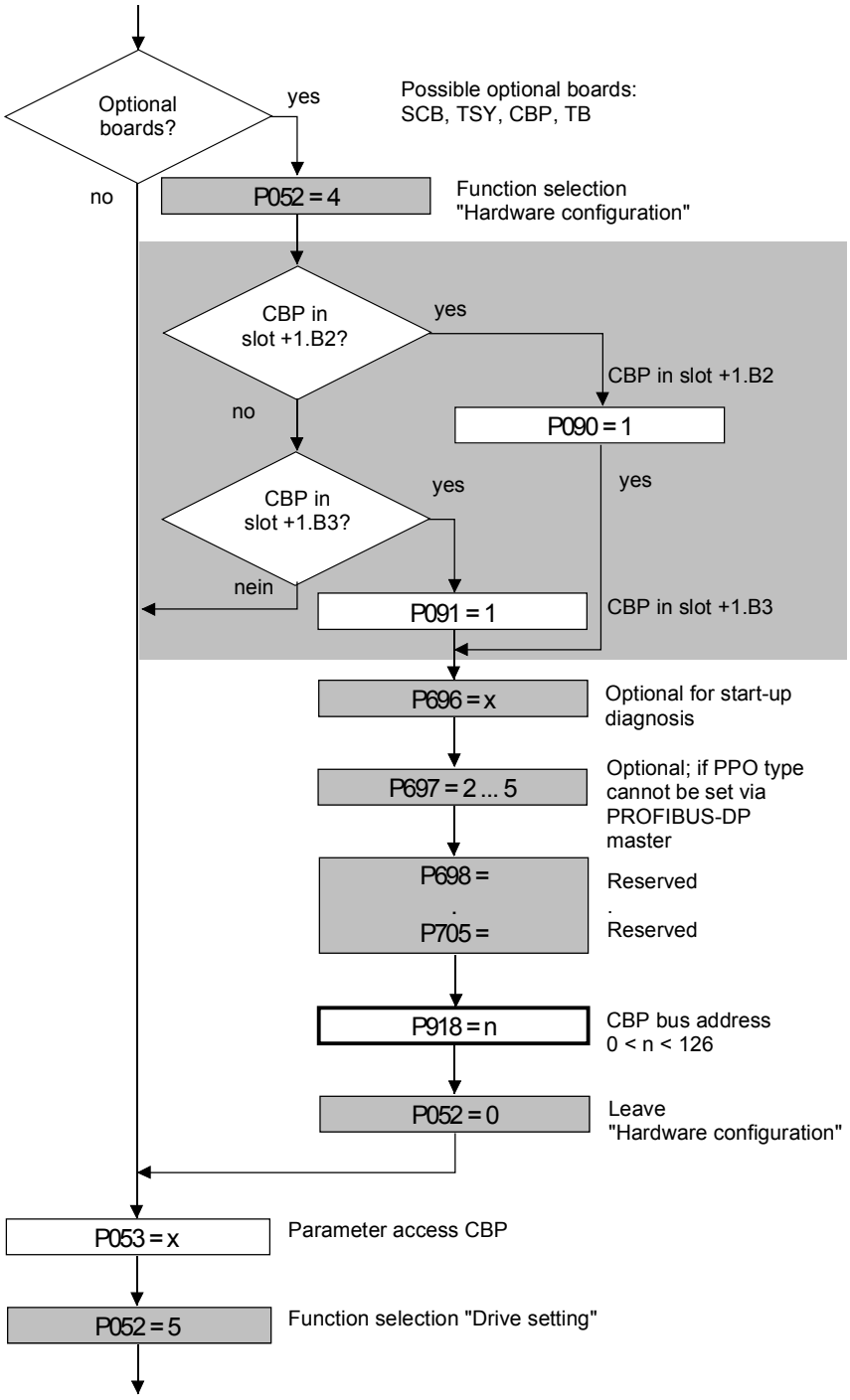

Fig. 8.2-19 Parameterization of "Hardware configuration" for FC (CU1), VC (CU2) and SC (CU3)

NOTE

All grayed out parameters are only valid for units with the functions FC (CU1), VC (CU2) and SC (CU3).

NOTE

The following conventions apply to all parameters with index (e.g. P918.x) given below:

- Index 1 is valid for the first CBP
- Index 2 is valid for the second CBP

To determine which CBP is the first and which the second, see Section 8.2.4 "Mounting methods / CBP slots".

P053 (parameter access)
This parameter is significant for the CBP if you wish to set or change parameters of the converter (including technology) by means of the PKW part of the PROFIBUS telegrams. In this case, please set parameter P053 to an uneven number (e.g. 1, 3, 7 etc.). With parameter P053, you can define the positions (PMU, CBP etc.) from which parameters may be altered. Example: P053 = 1: Parameter access only CBP = 3: Parameter access CBP+PMU = 7: Parameter access CBP+PMU+SCom1 (OP) If changing parameters (= parameter access) has been enabled via the CBP (P053 = 1, 3 etc.), all other parameter settings can be made from the PROFIBUS-DP master via the bus. For the additional setting of parameters which concern data transfer via the PROFIBUS-DP (e.g. process data (PZD) combination), you must know the PPO type used for the transfer of useful data.

P060	**P052**
Function selection "Hardware setting"	

P090 (board position 2) or P091 (board position 3)
You can also change these parameters if the CBP exchanges useful data via the PROFIBUS-DP. In this way, you can isolate the PROFIBUS-DP interface from the converter with the appropriate parameterization. In this case, the CBP changes over to the PROFIBUS-DP status "Static Diagnosis", i.e. the CBP causes the PROFIBUS-DP master to exit the data-exchange mode and only to request diagnostic telegrams from the CBP.

P918.x (CBP Bus Address)	**P918 (CBP Bus Address)**
The CBP accepts the address set in parameter P918 only after voltage recovery or a reset. After the CBP has been parameterized, it is no longer possible to change the address. Any attempt to do so leads to fault number F080. An address change only becomes effective after the power supply to the electronics box has been turned off and then turned on again!	

P711.x (CBP Parameter 1)	P696 (CBP Parameter 1)
With this parameter, you can activate special diagnostic information for start-up and service. During normal operation, P711 / P696 has the value 0 (default setting).	

P712.x (CBP Parameter 2)	P697 (CBP Parameter 2)
If you are using a PROFIBUS-DP master system where it is possible to set the identification byte and thus specify the type of PPO (e.g. IM308B/C for SIMATIC S5), you do not need to do anything with P712 / P697 (simply bypass this parameter P712 / P697)! If you are using a PROFIBUS-DP master system where it is not possible to specify the PPO type at the converter by means of the identification byte (e.g. CP5431 for SIMATIC S5), you can specify a PPO type with parameter P712 / P697. With the default setting (P712 / P697= 0), the CBP automatically sets the type of PPO. P712 / P697 = 0: PPO1 (default setting) = 1: PPO1 = 2: PPO2 = 3: PPO3 = 4: PPO4 = 5: PPO5	

P713.x (CB Parameter 3)	P698 (CBP Parameter 3)
Only CBP2 Communications protocol: P713 / P698 = 0: PROFIBUS (Default setting) (P713 / P698 = 1: reserved) P713 / P698 = 2: USS Only selected parameters are relevant (see below). A change from the PROFIBUS to the USS protocol and vice versa does not come into effect until after the voltage has been switched off and then on again.	

P714.x (CB Parameter 4)	P699 (CBP Parameter 4)
Only CBP2 Write requests of a SIMATIC OP are stored permanently (EEPROM) or temporarily (RAM). P714 / P699 = 0: EEPROM (default setting) P714 / P699 = 1: RAM	

P715.x (CB Parameter 5)	P700 (CBP Parameter 5)
Only CBP2 Failure of a cross-traffic relationship is signaled as a fault or alarm. P715 / P700 = 0: Fault (default setting) In the event of failure, transmission of all setpoints to the basic unit is stopped. This leads to fault F082 P715 / P700 = 1: Alarm The failure is only signaled by alarm A088. With regard to the missing setpoints, those last received are retained.	

NOTE

After the above settings have been made, the CBP is logged-on in the converter and is ready to establish connections to the PROFIBUS-DP. It is not yet possible to process the process data via the PROFIBUS-DP after this has been done.

This additionally requires the type of process data interconnection described in the following section 8.2.6.2.

USS

For USS-relevant parameter numbers, only CBP2 with P713.x = 2:

CBP2 parameter number	Meaning	Corresponds to Scom/ SCB parameter number
P918.x	Bus address	P700
P718.x (CB parameter 8)	Baud rate 6 = 9.6 kbaud 7 = 19.2 kbaud 8 = 38.4 kbaud	P701
P719.x (CB parameter 9)	Number of PKWs	P702
P720.x (CB parameter 10)	Number of PZDs	P703
P722.x	Telegram failure time	P704

Further information on the USS protocol can be found in Section 8.1, USS.

8.2.7.2 Process data interconnection in the units

Definition

Process data interconnection involves the linking up of setpoints and control bits to the RAM interface. The transferred process data only become effective when the used bits of the control words as well as the setpoints, status words and actual values are allocated (connected) to the dual-port RAM interface.

The CBP stores the received process data at fixed pre-determined addresses in the dual-port RAM. Each item of process data (PZDi, i = 1 to 10) is assigned a connector (e.g. 3001 for PZD1). The connector is also used to determine whether the PZDi (i = 1 to 10) is a 16-bit value or a 32-bit value.

With the help of selector switches (e.g. P554.1 = selector switch for bit 0 of control word 1), the setpoints or the individual bits of the control words can be assigned to a particular PZDi in the dual-port RAM. In order to do this, the connector belonging to the required PZDi is assigned to the selector switch.

NOTE

In function classes CUMV, CUVC and Compact PLUS, the control words STW1 and STW2 are also available in bit form on so-called binectors (explanations of BICO systems can be found in Chapter 4 "Function Blocks and Parameters").

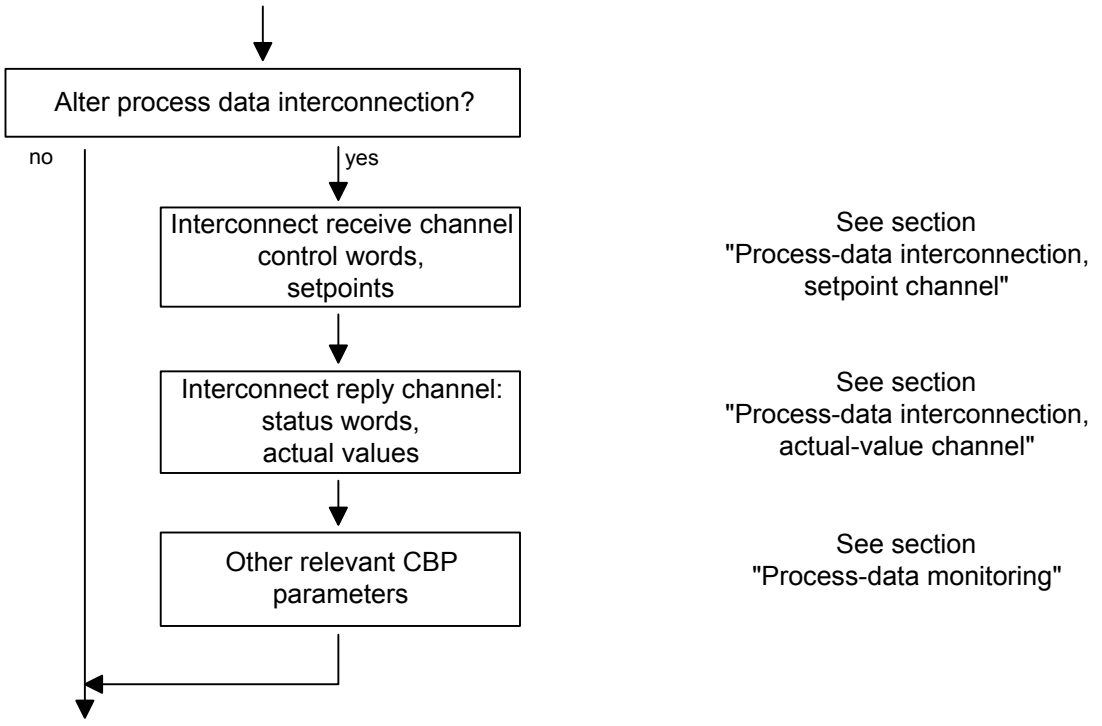

Fig. 8.2-20 Procedure for changing process data

NOTICE

Rewiring from 16 to 32 bit and vice versa should not be done while the equipment is in operation, because the changeover takes several milliseconds, during which time the data on the bus are not consistent (high and low can change places).

Examples

The following pages contain examples of how the transferred data are allocated in the units by means of process data interconnection.

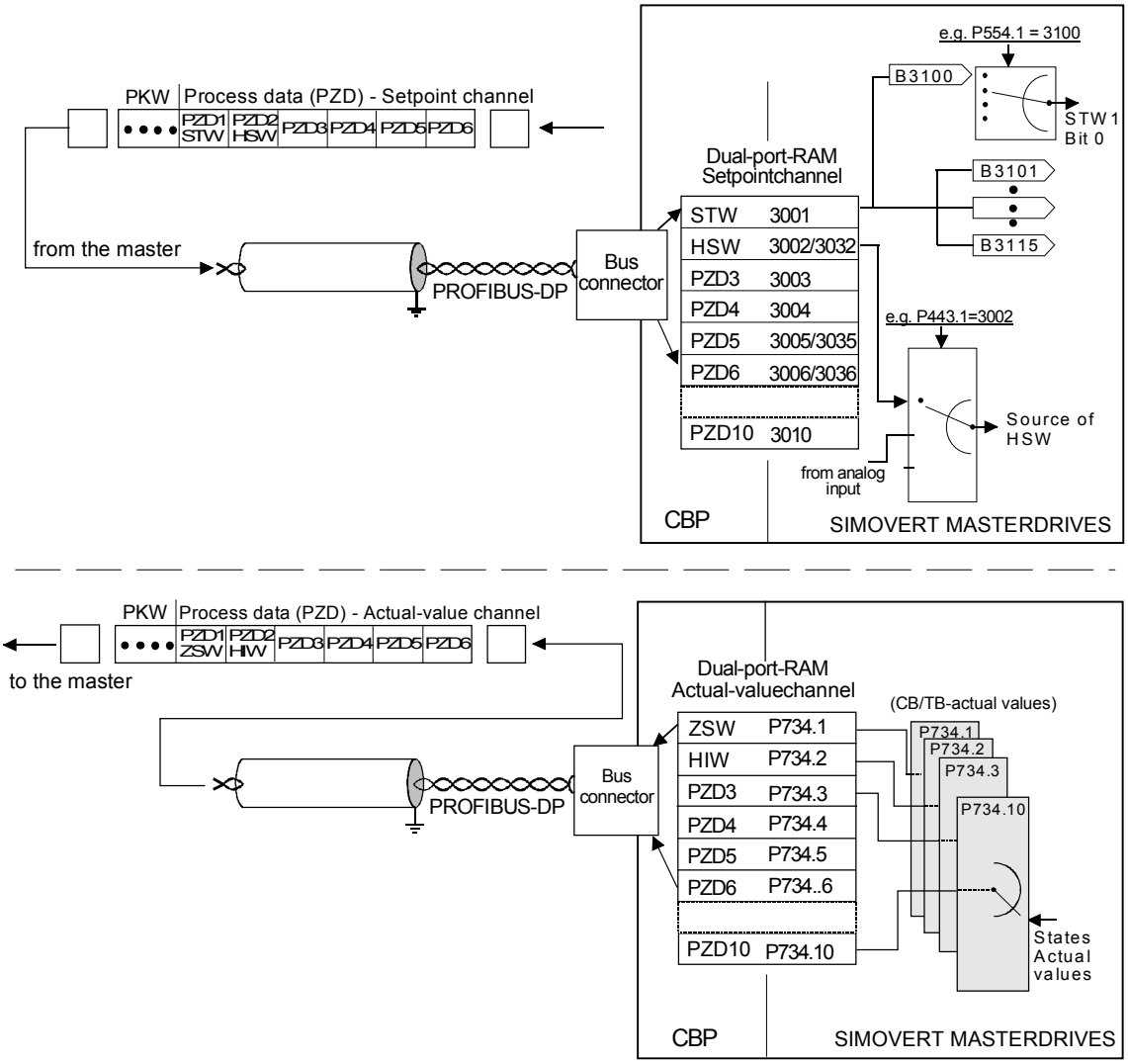

Fig. 8.2-21 Example of process data interconnection of the first CB board in function classes Motion Control Compact PLUS, CUMC and CUVC

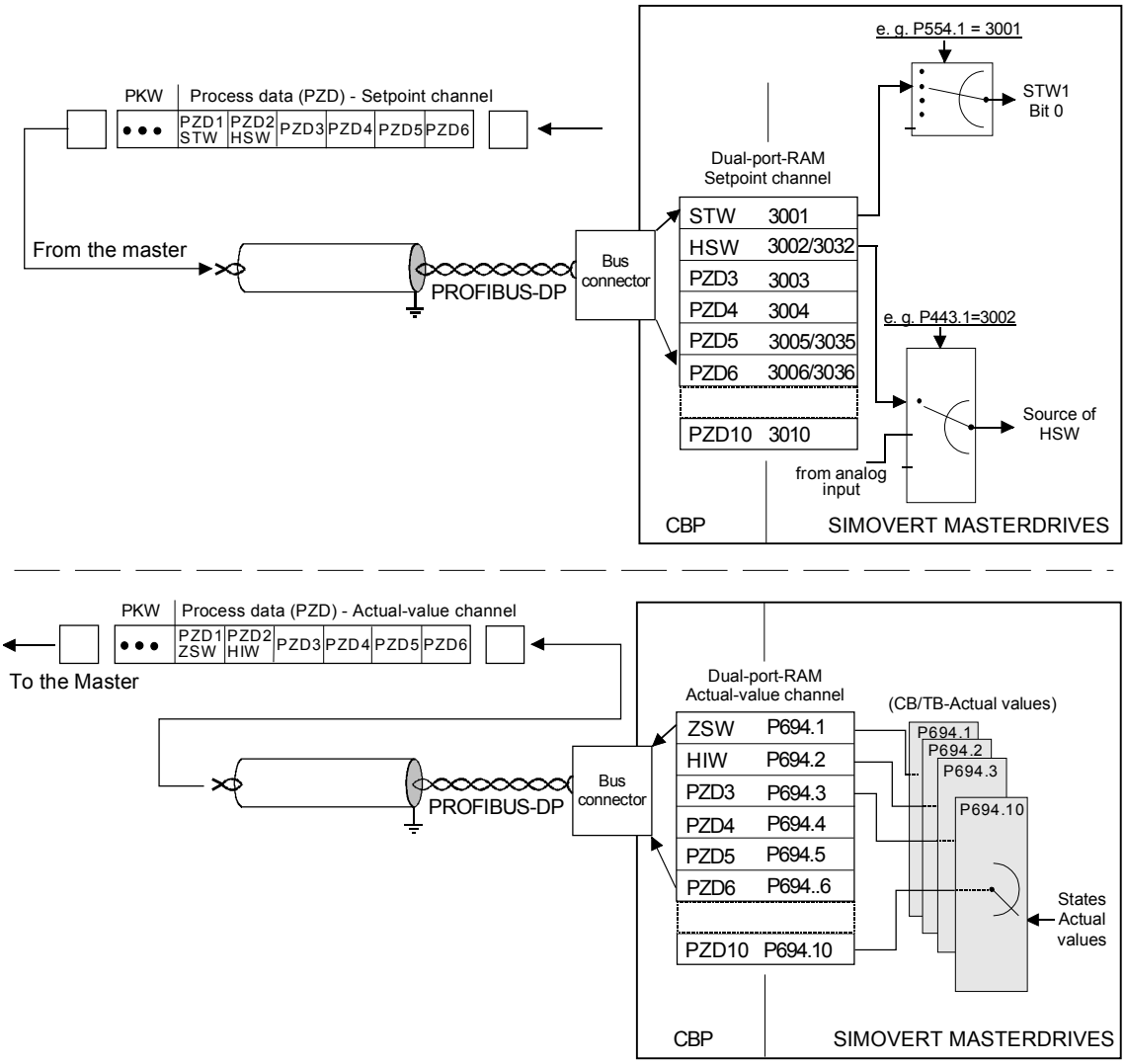

Fig. 8.2-22 Example of process data interconnection for function classes FC (CU1), VC (CU2) and SC (CU3)

Process data interconnection, setpoint channel Master → Converter

- The "tens digit" of the connector is used to distinguish between a 16-bit process data item (e.g. 3002) and a 32-bit process data item (e.g. 3032).
- If a process data item is transferred as a 16-bit quantity, assign the required PZDi-relevant connector for a 16-bit process data item to the selector switch (see "Process data linkage"). (Example: If a 16-bit process data item is assigned to PZD2, the relevant connector is 3002).
- If a process data item is transferred as a 32-bit process data item, assign the required PZDi-relevant connector for a 32-bit process data item to the selector switch (see "Process data interconnection"). For this, use the connector of the least-significant PZDi (Example: If a 32-bit process data item is assigned to PZD2 + PZD3, the relevant connector is 3032)
- The first word (associated connector : 3001 or the binectors 3100 to 3115) of the received process data is always assigned to control word 1 (STW1).
- The second word is always assigned to the main setpoint (HSW).
- If the main setpoint is transferred as a 32-bit process data item, it is also assigned to word 3. In this case, the most-significant part of the main setpoint is transferred in word 2 and the least-significant part is transferred in word 3.
- If a control word 2 (STW2) is transferred, the fourth word (relevant connector = 3004 or binectors 3400 to 3415) is always assigned to STW2.

NOTE

In PPO types 1 and 3, the PZD part only consists of two words. Here, only control word 1 and the main setpoint (as 16-bit value) can be linked up to the dual-port RAM interface.

- The connector for the setpoint channel is always a 4-digit one. The connectors assigned to the process data (PZD1 to PZD10) are shown in the function diagram of the relevant CU board.
  The connectors are entered at the PMU as 4-digits values (e.g. 3001). When parameterization is done via the PROFIBUS-DP, the connector is entered via the bus and also via the PMU (e.g. connector 3001 is transferred as 3001_{hex}).

NOTE

Process data interconnection of the setpoint channel can also be carried out via the PROFIBUS-DP if P053 has previously been set to an uneven value.

Please bear in mind that control word 1 (STW1) has the value 0 during the parameterization phase (process data interconnection)!

Interlocking of connectors and double connectors

MC V1.50 and higher / CUVC V3.23 and higher

DANGER

When interconnecting connectors, binectors, and double word connectors, please note that simultaneous interconnection of a connector, and a double word connector with the same name is not permitted, because when a double word connector (e. g. KK3032) is connected, the meanings of the connectors K3002 and K3003 are swapped round (high-word and low-word exchanged).

On MASTERDRIVES MC and Compact Plus on software version V1.50 and higher and on MASTERDRIVES CUVC on software version V3.23 and higher, simultaneous use of connectors and double word connectors with the same name is mutually interlocked (see also function diagrams [121] and [131]).

Because the binectors are not included in the interlocking (to ensure compatibility for older configurations), their significance changes according to whether the pertinent word or double word is wired.

Example for the setpoint channel

PZD interconnection for the bits of control word 1 (STW1), the main setpoint (HSW) and the bits of control word 2 (STW2).

At the converter via PMU		Meaning
P*554*.1 = 3100	P*554*.1 = 3001	Control word 1 bit 0 (Src ON/OFF1) via DPR interface (word 1)
P*555*.1 = 3101	P*555*.1 = 3001	Control word 1 bit 1 (SrcON/OFF2) via DPR interface (word 1)
P*443*.1 = 3002	P*443*.1 = 3002	16-bit main setpoint (Src Main Setpoint) via DPR interface (word 2)
P*588*.1 = 3411	P*588*.1 = 3004	Control word 2 bit 28 (Src No Ext Warn1) via DPR interface (word 4)

If the factory setting of the converter is used, the above example of parameterization is a functioning way of interconnecting process data (setpoints).

- *Italics:*
  Parameter number (if the PMU is a decimal number, via PROFIBUS-DP as an equivalent HEX number).
- Single underline:
  Index (if the PMU is a decimal number, via PROFIBUS-DP as an equivalent HEX number).
- Double underline:
  Interconnection value: defines whether the parameter selected by the *parameter number* is transferred as a 16-bit value or as a 32-bit value and at which position in the PZD-setpoint telegram (PZDi), the parameter is transferred.
  - White background = MASTERDRIVES Compact PLUS, CUMC or CUVC (first CBP)
  - Grey background = MASTERDRIVES FC (CU1), VC (CU 2) or SC (CU 3)

Process data interconnection, actual-value channel

The actual-value process data (PZDi, i = 1 to 10) are assigned to the appropriate status words and actual values by the indexed parameter P734.i / P694.i (CB/TB actual values). Each index stands for a process data item (e.g. 5 → PZD5 etc.). Please enter the number of the connector or parameter whose value and corresponding process data item you wish to transfer in parameter P734 / P694 under the relevant index.

The status word is always to be transferred in the PZD1 word of the PZD reply (actual-value channel), and the main actual value in PZD2. What additional items are assigned to the PZD (PZD1 up to, if necessary, PZD10) is not specified. If the main actual value is transferred as a 32-bit value, then it is assigned to PZD2 and PZD3.

Example for the actual-value channel PZD interconnection for status word 1 (ZSW1), the main actual value (HIW) and status word 2 (ZSW2).

At the converter via PMU		Meaning
P*734*.1 = 32	P*694*.1 = 968	Status word 1 (K032 / P968) is transferred in the actual-value channel by means of PZD1.
P*734*.2 = 151	P*694*.2 = 218	The actual speed n/f (KK151 / P218) is transferred in the actual-value channel by means of PZD2 (here, as a 16-bit quantity; PZD3 is empty).
P*734*.4 = 33	P*694*.4 = 553	Status word 2 (K033 / P553) is transferred in the actual-value channel by means of PZD4.

Example: 32-bit main actual value

P*734*.2 = 151	P*694*.2 = 218	The actual speed n/f (KK151 / P218) is transferred in the actual-value channel by means of PZD2 ...
P*734*.3 = 151	P*694*.3 = 218	... **and** as a 32-bit value by means of PZD3.

- *Italics:*
  P734 / P694 (CB/TB actual value), if PMU is shown as a decimal number, transferred via PROFIBUS-DP as an equivalent HEX (2B6 Hex).
- Single underline:
  Index (if PMU is a decimal number, via PROFIBUS-DP as an equivalent HEX number): Specifies at which position in the PZD actual-value telegram the actual value selected by the parameter number is transferred.
- Double underline:
  Parameter number of the required actual value.
  - White background = MASTERDRIVES Compact PLUS, CUMC or CUVC (first CBP)
  - Grey background = MASTERDRIVES FC (CU1), VC (CU 2) or SC (CU 3)

NOTE

If actual values are transferred as a 32-bit data item, you must enter the appropriate connector number at two consecutive words (indices).

8.2.7.3 Process data interconnection via standard telegrams

Definition PROFIdrive profile version V3 defines standard telegrams for cyclical data exchange.

Telegram selection Process data can be interconnected for standard telegrams by means of a Script file.

Structure of standard telegrams See also PROFIdrive version 3 (PNO: Order No. 3172).

Standard telegram 1:

PZD number	1	2
Setpoint	STW1	NSOLL_A

PZD number	1	2
Actual value	ZSW1	NIST_A

Standard telegram 2:

PZD number	1	2	3	4
Setpoint	STW1	NSOLL_B		STW2

PZD number	1	2	3	4
Actual value	ZSW1	NIST_B		ZSW2

Standard telegram 3:

PZD number	1	2	3	4	5
Setpoint	STW1	NSOLL_B		STW2	G1_STW

PZD number	1	2	3	4	5	6	7	8	9
Actual value	ZSW1	NIST_B		ZSW2	G1_ZSW	G1_XIST1		G1_XIST2	

Standard telegram 4:

PZD number	1	2	3	4	5	6
Setpoint	STW1	NSOLL_B		STW2	G1_STW	G2_STW

PZD number	1	2	3	4	5	6	7	8	9	...
Actual value	ZSW1	NIST_B		ZSW2	G1_ZSW	G1_XIST1		G1_XIST2		...

...	...	10	11	12	13	14
...	...	G2_ZSW	G2_XIST1		G2_XIST2	

Standard telegrams 5 and 6 are derived from standard telegrams 3 and 4 for the Dynamic Servo Control (DSC) function.

Standard telegram 5:

PZD number	1	2	3	4	5	6	7	8	9
Setpoint	STW1	NSOLL_B		STW2	G1_STW	XERR		KPC	

PZD number	1	2	3	4	5	6	7	8	9
Actual value	ZSW1	NIST_B		ZSW2	G1_ZSW	G1_XIST1		G1_XIST2	

Standard telegram 6:

PZD number	1	2	3	4	5	6	7	8	9	10
Setpoint	STW1	NSOLL_B		STW2	G1_STW	G2_STW	XERR		KPC	

PZD number	1	2	3	4	5	6	7	8	9	...
Actual value	ZSW1	NIST_B		ZSW2	G1_ZSW	G1_XIST1		G1_XIST2		...

... ...

10	11	12	13	14
G2_ZSW	G2_XIST1		G2_XIST2	

Signals:

Signal No.	Meaning	Abbreviation	Length 16/32-bit	Sign
1	Control word 1	STW1	16	
2	Status word 1	ZSW1	16	
3	Control word 2	STW2	16	
4	Status word 2	ZSW2	16	
5	Speed setpoint A	NSOLL_A	16	with
6	Actual speed A	NIST_A	16	with
7	Speed setpoint B	NSOLL_B	32	with
8	Actual speed B	NIST_B	32	with
9	Encoder 1 control word	G1_STW	16	
10	Encoder 1 status word	G1_ZSW	16	
11	Encoder 1 actual position 1	G1_XIST1	32	
12	Encoder 1 actual position 2	G1_XIST2	32	
13	Encoder 2 control word	G2_STW	16	
14	Encoder 2 status word	G2_ZSW	16	
15	Encoder 2 actual position 1	G2_XIST1	32	
16	Encoder 2 actual position 2	G2_XIST2	32	
25	Control deviation	XERR	32	with
26	Position controller gain factor	KPC	32	with

8.2.7.4 Process data monitoring

NOTE

Please note the different parameter numbers for the types of unit with the older function classes FC (CU1), VC (CU2) and SC (CU3).

In order to make these differences clear, these parameter numbers are either printed in dark gray or have a dark-gray background.

P722.x (CB/TB TlgOFF)	P695 (CB/TB TlgOFF)
With parameter P722. / P695, you can determine whether entering of process data into the dual-port RAM by the CBP is to be monitored by the converter. For parameter P722 ♦ Index 1 is applicable for the first CBP and ♦ Index 2 is applicable for the second CBP. To determine which CBP is the first one and which is the second one, see section 8.2.4 "Mounting methods / CBP slots".	

If process data monitoring has been activated, a fault in the DP master is followed by a reaction of the converter, irrespective of the reply-monitoring time in the CBP.

&	P722.x ≠ 0	P722.x = 0	P695 ≠ 0	P695 = 0
Response monitor active	Reaction Yes	Reaction No	Reaction Yes	Reaction No
Response monitor inactive	Reaction No	Reaction No	Reaction No	Reaction No

Table 8.2-10 Process data monitoring depending on P722.1/P695 and the response monitor t_{WD}

When the DP master is being configured, it is specified whether telegram traffic with the master is to be monitored by the slave (CBP). If response-monitoring is active, the PROFIBUS-DP master passes on a time value t_{WD} (watchdog time) to the CBP when a connection is made.

If the response-monitoring time expires, the CBP ceases to write process data into the dual-port RAM. When this is combined with P722.x / P695, it is therefore possible to plan your process data monitoring.

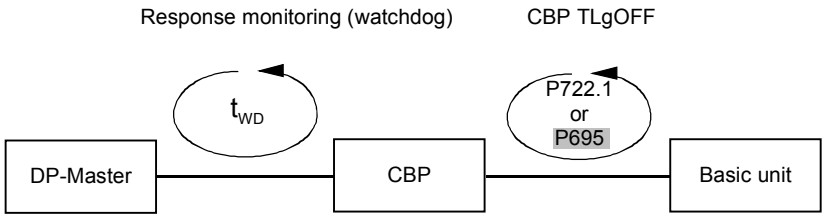

Fig. 8.2-23 Effect of t_{WD} and P722.1 / P695

Response-monitoring time t_{WD}

P722.x P695	Yes: CPU (AG) in STOP	Yes: IM308B/C in STOP or Simatic "Supply off"	No: CPU (AG) in STOP	No: IM 308B/C in STOP	No: Simatic "Supply off"
0 ms	Converter continues to run with the useful data last received. Alarm A083	Converter continues to run with the useful data last received. Alarm A083/A084	Converter continues to run with the useful data last received.	Converter continues to run with the useful data last received. Alarm A083	Converter continues to run with the useful data last received.
10 ms	Fault trip with F082 after: Watchdog time + 10 ms	Fault trip with F082 after: Watchdog time + 10 ms	Converter continues to run with the useful data last received. Fault trip with F082 after restart of CPU.	Fault trip with F082 after: 10 ms	Converter continues to run with the useful data last received.

Table 8.2-11 Interaction of P722 / P695 and response monitoring (watchdog)

Always set parameter P722.x / P695 to 10 for operation with the CBP. Monitoring of process data is thus activated/deactivated by the value of the response-monitoring (watchdog) time solely via the PROFIBUS-DP! The converter monitors entering of process data into the dual-port RAM from the instant at which the CBP enters process data into the dual-port RAM for the first time. Fault F082 can only be tripped after this instant!

Process data whose complete control word (PZD1) has the value zero is not passed on by the CBP to the dual-port RAM (warning A083)!

A fault is followed by a fault trip after

- Watchdog time + 10 ms
- The 10 ms correspond to the value 10 of parameter P722 / P695 and can be neglected with respect to the response-monitoring value.
- For additional operation with a Class II master, please bear in mind the information in the section "Diagnosis with the Class II master" of Chapter 8.2.8.4.

DANGER

If the "ON" command (bit 0) is interconnected with the dual-port RAM interface, the following must be done for safety reasons:

An "OFF2" or "OFF3" command must be additionally parameterized to the terminal strip/PMU as otherwise the converter cannot be powered down by means of a defined command when there is a communications breakdown!

8.2.8 Settings for the PROFIBUS-DP master (Class 1)

PROFIBUS units have different performance characteristics.
In order to ensure that all master systems can correctly communicate with the CBP in all the ways possible, the characteristic features of the CBP are summarized in the form of an electronic data sheet (data file).

These so-called master files describe the characteristic features of a type of unit clearly and completely in an exactly specified format.

For the different master systems, the characteristics are summarized in a standardized master file (GSD) and, for the SIMATIC, in a type-description file specific to the SIMATIC.

Master file (GSD)

The CBP2 V2.20 supports PROFIdrive version 3. The device master file (GSD) is stored as an ASCII file (SIEc8045.GSD) on the floppy disk supplied with the CBP.

The GSD allows you to configure standard telegrams 1 to 6. It has been generated according to revision 4 for PROFIBUS DP-V2.

To ensure complete compatibility between CBP and CBP2 V2.10, PPO types can still be used for configuring purposes, as described below.

The CBP2 V2.20 can also be operated on the device master file for the CBP and CBP2 V2.1 (SIEM8045.GSD).

Type-description file

The type-description file is also available as an ASCII file (SI8045AX.200 and SI8045TD.200) on the floppy disk which accompanies the CBP.

Selecting the type of PPO

So-called identification bytes are transferred in the configuration telegram of the PROFIBUS-DP master. These bytes determine the type of PPO for the useful-data telegram.

These bytes can be assigned different values for selecting a particular type of PPO (except for PPO type 1). For PPO type 4, for example, either identification byte 0 = 245 and identification byte 1 = 0 can be entered or only identification byte 0 = 245. If an unknown combination of identification bytes is received, the CBP sets the bit "parameterization error" in the diagnostic telegram to the PROFIBUS-DP master.

PPO	Identification byte 0			Identification byte 1			Identification byte 2			Identification byte 3			COMET200
type	Dec	Hex	COM	Dec	Hex	COM	Dec	Hex	COM	Dec	Hex	COM	Version
1	243	F3	4AX	241	F1	2AX							V4.x/V5.x
2	243	F3	4AX	243	F3	4AX	241	F1	2AX	0	0	0	V4.x/V5.x
2	243	F3	4AX	243	F3	4AX	241	F1	2AX				V4.x/V5.x
2	243	F3	4AX	245	F5	6AX							V5.x
3	241	F1	2AX	0	0	0							V4.x/V5.x
3	0	0	0	241	F1	2AX							V4.x/V5.x
3	241	F1	2AX										V4.x/V5.x
4	0	0	0	243	F3	4AX	241	F1	2AX	0	0	0	V4.x/V5.x
4	0	0	0	243	F3	4AX	241	F1	2AX				V4.x/V5.x
4	0	0	0	243	F5	6AX							V5.x
4	245	F5	6AX	0	0	0							V5.x
4	245	F5	6AX										V5.x
5	243	F3	4AX	243	F3	4AX	243	F3	4AX	241	F1	2AX	V4.x/V5.x
5	243	F3	4AX	243	F3	4AX	241	F1	2AX	243	F3	4AX	V4.x/V5.x
5	243	F3	4AX	249	F9	10AX							V5.x

Table 8.2-12 Values for the identification bytes

8.2.8.1 Operating the CBP with a SIMATIC S5

When the CBP is used with a **SIMATIC S5**, it is operated as a **standard DP slave**.
As possible master boards, the IM308 B or the IM308 C can be used, or even the CP5431 in limited form.
The planning tools COM ET200 or COM PROFIBUS are available for configuring the master station.

If older versions of these planning tools are used, you must copy the master file or type-description file from the accompanying floppy disk into the appropriate sub-directory of the planning software.

COM ET200 up to Version V4.x

When configuring the CBP, please use the SI8045TD.200 type-description file on the floppy disk.

Please copy the type-description file into the directory containing the COM ET 200 files in the PG/PC.

Example

CD C:\COMET200
COPY A:\SI8045TD.200 C:

The type of PPO is selected in the configuration mask of COM ET200 up to Version V4.x by entering identification bytes in accordance with the above table of identification bytes.

COM ET200 WIN and COM PROFIBUS

When configuring the CBP, please use the SI8045AX.200 type-description file on the floppy disk only if the CBP has not yet been included in the supplied version of the COM package.

Then copy the type-description file into the "TYPDAT5X" directory of the COM installation in the PG/PC.

From COM PROFIBUS V3.2 onwards, the CBP is included as standard and the type-description files on the floppy disk are then of no significance.

When a CBP is being configured (pull out the selector buttons "DRIVES" on the bus cable) and the suggested slave address is confirmed, a selection mask called "Slave characteristics" appears on the screen. It has the following appearance:

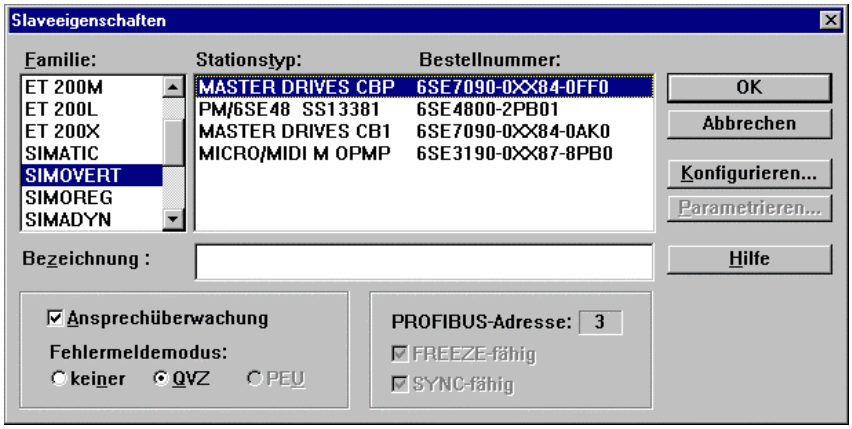

The required type of PPO is selected with this planning tool from a selection table called "Required configuration". This table appears automatically when the menu item "Configure" is selected.

More information on how to configure data exchange between a CBP and a SIMATIC S5 can be found in the description accompanying the DVA_S5 module package.

Using the DVA_S5 module package

The DVA_S5 module package (variable-speed drives with the SIMATIC S5) implements data transfer between SIMATIC and SIMOVERT slaves in accordance with the PROFIBUS profile for variable-speed drives and thus facilitates creation of the user program. A data module with the same appearance is always provided as the data interface, irrespective of which S5-CPU the program runs on. The programmer, therefore, does not need any detailed knowledge of the SIMATIC S5 system architecture or of the system functions which may be required.

The DVA_S5 module package can be obtained from A&D WKF Fürth/Germany under MLFB 6DD1800-0SW0.

8.2.8.2 Operating the CBP with a SIMATIC S7

CBP as S7 slave

The CBP can be operated in two ways with a **SIMATIC** S7:

- As a standard DP slave
- As a standard DP slave with extended functionality for SIMATIC S7

Integrated PROFIBUS interfaces

The CPUs with integrated PROFIBUS interface such as CPU315-2DP, CPU413-2DP, CPU414-2DP or CPU416-2DP etc. can be used as the possible S7 master.

The master station as well as the whole PROFIBUS network is configured in the STEP 7 hardware manager.

CBP as a standard DP slave

Requirement: STEP 7 from V3.0 upwards

If your STEP 7 hardware catalog does not yet contain the entry "MASTERDRIVES CBP", proceed as follows:

Copy the type-description file S18045AX.200 from the supplied floppy disk into the STEP 7 index STEP7 à S7DATA à GSD.

From STEP 7 version V4.01, the CBP is contained as standard in the hardware catalog, i.e. from version V4.01 onwards, the floppy disks are of no significance.

In the "Extras" menu of the SIMATIC hardware configuration, then select the menu item "Update GSD files" and carry out this command.

You will find the CBP in the "Hardware catalog" menu under "PROFIBUS-DP à Further field devices à Simovert". It appears there under the name "MASTERDRIVES CBP".

CBP as a standard DP slave with extended functionality

To enable the CBP to be connected as a standard DP slave with extended functionality for SIMATIC S7 (e. g. acyclical communication with SIMOVIS/DriveMonitor) to the PROFIBUS-DP, a so-called DVA_S7 object manager has to be installed as an add-on to STEP 7. The DVA_S7 object manager is part of the DVA_S7 module package.

STEP7 basis software, Version V3.1 and upwards, is a requirement for installation of the DVA_S7-OM.

The DVA_S7-OM takes on the function of a master file or type-description file and supplements the unit characteristics stored there with all the necessary S7 characteristics.

S7 diagnosis

If the CBP is configured in SIMATIC S7 using the DVA_S7 object manager, a diagnosis alarm is automatically generated for the converter fault in the S7-CPU. This diagnosis alarm is derived from bit 3 of the status word (collective fault) and results in a **STOP of the S7-CPU if the OB82 (diagnostics organization block) is not programmed.**
For the correct processing of the diagnosis alarm, the status word of the converter always has to be transferred unchanged as the first word from the converter to the CBP (see section "Process data interconnection").

NOTE

When a converter fault occurs, the CBP2 does not generally trigger a diagnosis alarm.

The behavior of the S7-CPU during complete failure of a configured drive or during an interruption in the bus cable can be controlled by programming the relevant system organization modules OB86 and OB122. If these system modules are not programmed, the S7-CPU also goes into the STOP state if a configured drive fails or if a bus is interrupted. Refer to Chapter 3 of the programming manual for the S7-300/400 for detailed descriptions on the indicated system organization modules.

After installation of the DVA_S7-OM , the CBP is shown as follows in the hardware catalog:

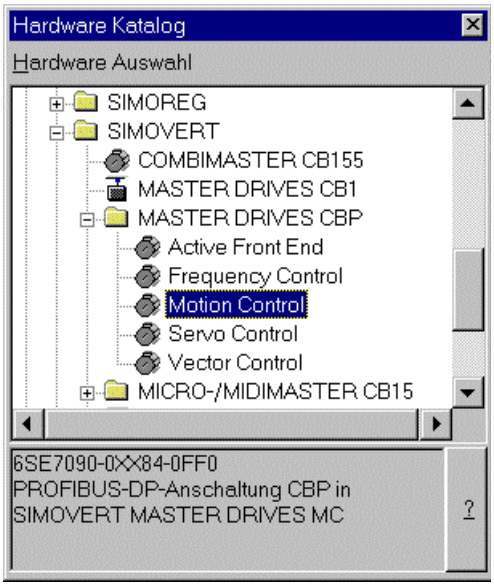

The type of PPO is selected in the hardware manager from the register "Configuration" of the "Characteristics – DP slave" mask which is automatically shown on the screen when the selection (e.g. Motion Control) is confirmed.

More information on planning data exchange between a CBP and a SIMATIC S7 can be found in the description accompanying the DVA_S7 module package.

If the DVA_S7 module package is not used, the system features regarding data consistency have to be observed by the user program. In particular, this means that access can only be made via the system functions SFC14 and SFC15 to all consistent data areas > 4 bytes.

The PKW and the PZD parts are regarded as two independent consistent data areas.

	PKW	PZD (4, 12 or 20 bytes)
PPO1	(8 bytes)	(4 bytes)
PPO2	(8 bytes)	(12 bytes)
PPO3	–	(4 bytes)
PPO4	–	(12 bytes)
PPO5	(8 bytes)	(20 bytes)

CP342-5DP

At the present time, the CBP can be operated with a CP342-5DP only as a standard DP slave because S7 functions are not yet supported by the CP342-5DP. In order to operate the CBP as a standard slave, the equipment master file or the type-description file must be incorporated into the STEP7 basic software (see integrated DP interfaces).

The DVA_S7 module package

The SIMATIC DVA_S7 module package (variable-speed drives on SIMATIC S7) implements data transfer between the drive and SIMATIC S7 in accordance with the PROFIBUS profile for variable-speed drives and thus facilitates creation of the user program. A data module with the same appearance is always provided as the data interface, irrespective of which S7 CPU the program runs on. The programmer does not therefore need any detailed knowledge of the SIMATIC S7 system architecture or of the necessary system functions.

As already mentioned, the DVA_S7 object manager is part of the scope of supply of the DVA_S7 module package.

The DVA_S7 module package can be obtained from A&D WKF Fürth/Germany under MLFB 6SX 7005-0CB00.

8.2.8.3 Operating the CBP with a non-Siemens system

When used with a non-Siemens master system, the CBP can be operated only as a standard DP slave.

Required master file

The equipment master file (GSD file) on the floppy disk contains all the information which a DP master system needs for integrating the CBP as a standard DP slave in its PROFIBUS configuration.

If the non-Siemens master system allows direct integration of a master file, the SIEM8045.GSD file can be copied into the relevant sub-directory.

If this is not possible, the required information will have to be taken from the SIEM8045.GSD file.

8.2.8.4 Operating the CBP2 with extended functions with a SIMATIC S7

The extended functions "Cross traffic" and "Clock synchronization" are described in detail in PROFIBUS Profile Drive Technology, Version 3.

DriveES SlaveOM

The functions described here presuppose the planning tool, STEP7, and driveES with the slave OM for the CBP2.

- Free configuration: Up to 16 process data can be configured in each case, separated into setpoints and actual values.
- Cross traffic: Direct slave-to-slave communication without going the long way round via the DP master.
- Clock synchronization: Synchronization of master and slave applications at the isochronous PROFIBUS.

Free configuration is possible with all DP masters which are configured with STEP7.

Cross traffic and clock synchronization presuppose DP masters which support this functionality, i.e. all S7-CPUs, for example, with the characteristic "equidistance".

Configuration

For free configuration and cross traffic, carry out configuration completely with the slave OM in the "Configuration" register. In the drive, only correct interconnection of the setpoints and actual values has to be carried out.

Clock synchronization

Configure Clock synchronization with the slave OM in the "Clock synchronization" register. In addition, some parameters in the drive have to be set (MASTERDRIVES MC only).

Detailed help can be obtained in the on-line help for the slave OM.

8.2.8.5 CBP2 with cross traffic operated with a SIMATIC S7

The cross traffic function enables direct slave-to-slave communication on the PROFIBUS without having to go the long way round via the DP master. A DP master, however, is needed "to keep time".

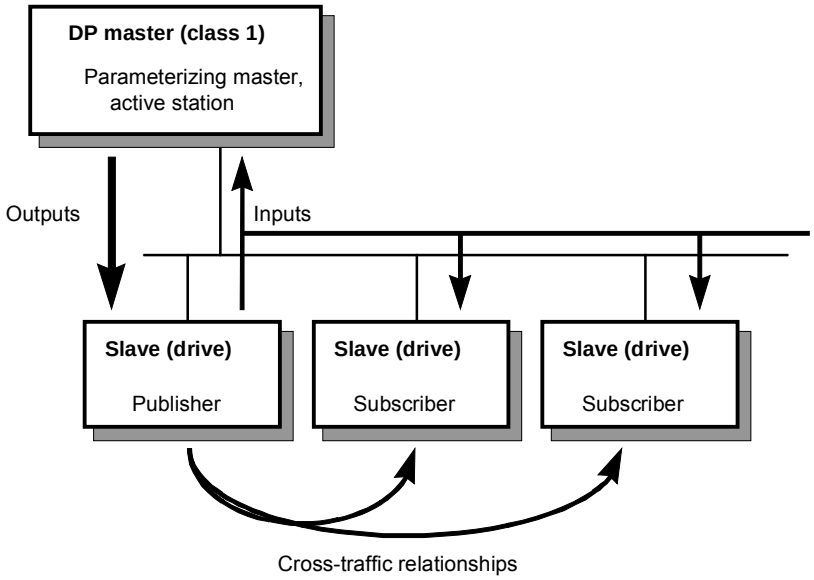

Fig. 8.2-24 Cross traffic

Configurations

With cross traffic, you can configure communication between DP slaves in various ways, e.g.

- "Broadcast": Stipulation of a master setpoint from a master drive to all drives.
- "Peer-to-peer": Passing on a setpoint from one drive to the next.

Definitions:

Encoder

- Cross-traffic encoder (publisher): All inputs of a DP slave capable of cross traffic are transmit data in relation to cross traffic. They can be received by the DP master or by DP slaves capable of cross traffic. Transmitting takes place automatically by means of a broadcast. Explicit configuration of the cross-traffic encoder is not necessary.

Receiver

- Cross-traffic receiver (subscriber): The sources for the setpoints are specified by means of configuration. The outputs of the DP master or the inputs of a DP slave as the cross-traffic encoder are possible sources (in the case of drives, their actual values). There are no restrictions on the way in which master outputs and slave inputs are mixed (with word granularity).

Drives capable of cross traffic can also receive data from themselves (feedback loop).

You need:

- STEP7 from Version 5.0 with Servicepack 2 or Servicepack 4 (Servicepack 3 is not suitable) or Version 5.1
- DriveES with slaveOM for CBP2
- S7-Profibus-Master with the "equidistance" property
- DP slaves which are capable of cross traffic as communication partners (e.g. drives or ET200)
- CBP2

Cross traffic is independent of the basic unit used. The functionality is completely provided in the CBP2.

You can configure cross traffic with the slave OM in the mask, "Configuration".

Quantities

Receive/transmit data: maximum of 16 words of setpoints/actual values per drive, can be divided up in any way on DP master and DP slaves capable of cross traffic.

Number of transmission channels: a broadcast channel which the DP master and any number of DP slaves can receive.

Number of receive channels: max. eight.

Example

The following illustration contains a cross-traffic configuration with two cross-traffic encoders (publishers) and a drive with CBP2 as the cross-traffic receiver (subscriber).

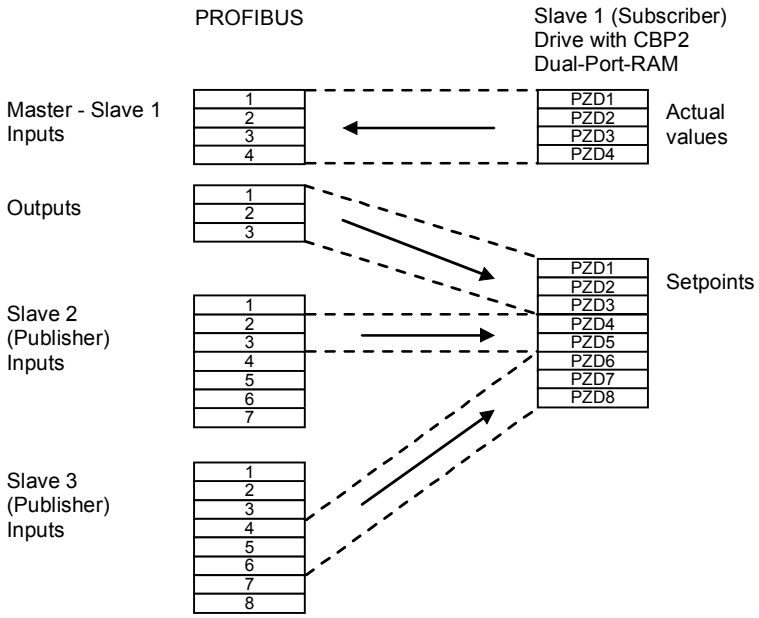

Fig. 8.2-25 Example of a cross-traffic configuration

8.2.8.6 CBP2 with clock synchronization operated with a SIMATIC S7

CBP2 with clock synchronization is not supported by MASTERDRIVES VC.

Clock synchronization enables the synchronization of several MASTERDRIVES MC at the isochronous PROFIBUS.

You need

- STEP7 Version 5 or higher
- DriveES with slave OM for CBP2
- S7 Profibus master with the "equidistance" characteristic
- CBP2
- MASTERDRIVES MC (Compact or Compact PLUS) software version 1.4 or higher

You can configure clock synchronization with the slave OM in the mask, "Clock synchronization".

Cycle times

The isochronous DP cycle must have been tuned to the pulse frequency of the drive. The following combinations are possible with the default pulse frequency of 5.0 kHz and a PROFIBUS transmission rate of 12 Mbit/s:

Synchronized task on CUMC	DP cycle	Max. number of DP slaves
T4	3.2 ms	11
T5	6.4 ms	27

STEP7 bus configuration

Measures relating to bus configuration:

- First, configure all DP slaves, possibly with cross traffic. The quantities and the minimum DP cycle on the PROFIBUS are thus defined.
- In the "Equidistance" register (can be reached under "PROFIBUS", "Properties", "Supply settings", "Options"), activate the isochronous bus cycle. You must repeat this step if you alter the bus configuration (deactivate Equidistance and re-activate!).
- In the "Clock synchronization" mask of the slaveOM, activate clock synchronization for the drive. The task T4 with 3.2 s is the default setting.
- It must be ensured that the difference between "DP cycle" and "Equidistance master cycl. part" is at least 1 ms. The CBP2 needs this time to copy the data between PROFIBUS and MASTERDRIVES CUMC consistently.
- The "Align" button ensures that all MASTERDRIVES MC are given the same settings for clock synchronization and that the DP master adopts the isochronous DP cycle.

Drive configuration

Configuration of MASTERDRIVES MC:

- Enabling the source for clock synchronization by means of P744:

P744.1	P744.2	Synchronization source
0	1	First CBP2
1	1	Second CBP2
0	0	(First SLB)
1	0	(Second SLB)

- With clock-synchronous PROFIBUS it is possible to switch on cycle monitoring with P723 = 1.
  Function: Synchronization telegrams that are received outside the bus cycle (± 12.8 µs) are ignored.
  Advantage: During faulty operation, incorrect and offset synchronization telegrams are detected and do not cause synchronization failure.
- All jobs to be synchronized must be in the same task, especially the processing of setpoints and actual values to the CBP2.

Diagnosis

Diagnosis of clock synchronization in MASTERDRIVES MC:

- B0043 = 1: Application is synchronous
- r748.9: should fluctuate between 65515 and 20

For further diagnostic parameters, see section "Diagnosis and Troubleshooting".

Times

The following times will help you when calculating the bus bandwidth available (12 Mbit/s):

- 150-200 µs "Equidistance master cycl. part" per DP slave (cyclical services master class 1)
- Approx. 600 µs for "Equidistance master acyclical part" (acyclical services master class 1)
- Approx. 700 µs for a max. of one additional active node (master class 2)
- 1000 µs computing time for CBP2, parallel to acyclical services

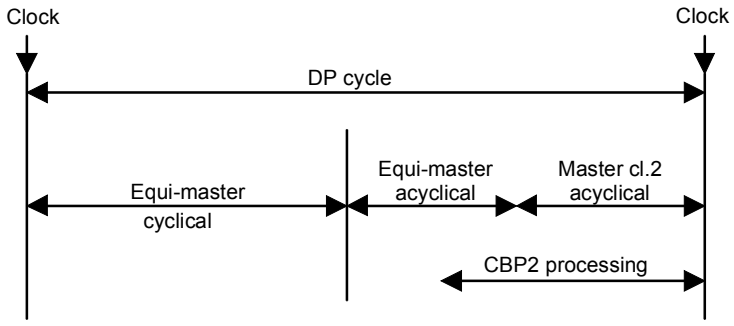

Fig. 8.2-26 Breakdown of the DP cycle at the isochronous PROFIBUS

Two time conditions which have to be complied with are

- "DP cycle" > "Equidistance master cyclical part" + 1000 µs
- "DP cycle" > "Equidistance master cyclical part" + "Equidistance master acyclical part"" + "Master class 2"

Auxiliary conditions

The following auxiliary conditions are to be complied with at the present time when clock synchronization at the isochronous PROFIBUS is used:

- Transfer rate: 12 Mbit/s (the performance of lower transfer rates is too small for drives)
- Maximum number of nodes: 31
- Maximum distance: 100 m
- Only one master class 1 (the equidistance master)
- A maximum of one additional master (class 2, PG); it is recommended that no additional master be used
- No repeater, no fiber optic cables (they cause different dead times)
- The CBP2 must be directly plugged onto the basic board (also via adapter board). There must not be a technology board plugged in between the basic unit and the CBP2

Comparison PROFIBUS / SIMOLINK

PROFIBUS offers you a bus system for all tasks. With SIMOLINK, you can achieve better performance in clock synchronization. The following table shows the differences in clock synchronization:

Criterion	PROFIBUS	SIMOLINK
Medium	Copper	Glass / plastic
Distance	100 m (12 Mbit/s)	Glass: 300 m Plastic: 40 m per node
Max number of nodes	31 (no repeater)	200
Number of slaves/cycle	11 / 3.2 ms; 27 / 6.4 ms	100 per ms / < 1 ms
Max. telegram length	16 words	n times 2 words

8.2.8.7 CBP2 with clock synchronization on a PROFIBUS master in accordance with PROFIdrive V3

CBP2 with clock synchronization is not supported by MASTERDRIVES VC.

The CBP2 V2.20 enables the clock cycles of several MASTERDRIVES MC to be synchronized according to PROFIdrive version 3 on the isochronous PROFIBUS.

You will need:

- A configuring tool that supports isochronous operation according to PROFIdrive V3
- A Profibus Master that supports isochronous operation according to PROFIdrive V3
- CBP2 from V2.20
- MASTERDRIVES MC (Compact or Compact Plus), software version 1.6

Cycle times

The pulse frequency of the drive must be set to 5.3 kHz for clock synchronization in accordance with PROFIdrive V3. The following combinations are possible with a PROFIBUS transmission rate of 12 Mbit/s:

Synchronized task on CUMC	DP cycle
T4	3 ms
T5	6 ms

Drive configuring

Configuring the MASTERDRIVES MC:

- Set pulse frequency to 5.3 kHz. Select P340 = 5.3 in the drive settings screen.
- Enable the source for clock sycnchronization via P744:

P744.1	P744.2	Synchronization source
0	1	First CBP2
1	1	Second CBP2
0	0	(first SLB)
1	0	(second SLB)

- A cycle monitoring function can be activated with P723 = 1 for the isochronous PROFIBUS.
  Function: Synchronization telegrams received outside the bus cycle (± 12.8 µs) are ignored.
  Advantage: Under fault conditions, faulty and displaced telegrams are detected so that synchronization errors can be avoided.
- All jobs to be synchronized must be located in the same task, especially processing of setpoints and actual values to the CBP2.

Diagnosis

Diagnosis of clock synchronization in MASTERDRIVES MC:

- B0043 = 1: Application is synchronous
- r748.9: Should fluctuate between 65515 and 20

For other diagnostic parameters, see Section "Diagnosis and troubleshooting"

Times

The following time data help you to calculate the available bus bandwidth (12 Mbit/s):

- 150-200 µs "Isochronous master cyclical share" per DP slave (cyclical services class 1 master)
- Approx. 600 µs for "Isochronous master acyclical share" (acyclical services class 1 master)
- Approx. 700 µs for max. one further active node (class 2 master)
- 1000 µs computation time for CBP2, in parallel to acyclical services

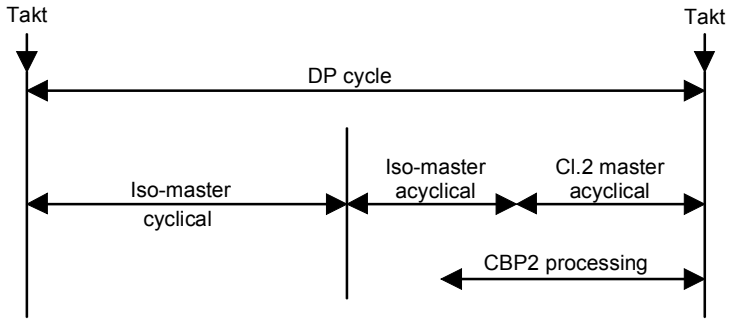

Fig. 8.2-27 Splitting of DP cycle on isochronous PROFIBUS

Two mandatory time conditions:

- "DP cycle" > "Isochronous master cyclical share" + 1000 µs
- "DP cycle" > "Isochronous master cyclical share" + "Isochronous master acyclical share" + "Class 2 master"

Supplementary conditions

The following supplementary conditions currently apply to clock synchronization on the isochronous PROFIBUS:

- Transmission rate: 12 Mbit/s (performance afforded by lower transmission rates is too low for drives)
- Maximum number of nodes: 31
- Maximum distance: 100 m
- For class 1 master only (isochronous master)
- A maximum of one other master (class 2, PG), ideally no other master
- No repeaters, no fiber optics (which cause varying deadtimes)
- The CBP2 must, of course, be inserted directly in the basic board (or via an adapter board). No technology board may be installed between the basic board and the CBP2.

8.2.9 MASTERDRIVES as PROFIdrive V3-Slave

CBP2 with clock synchronization is not supported by MASTERDRIVES VC.

Requirements

Variable speed electric drives in automated units, from the simple frequency converter to the highly dynamic servo controller, are now increasingly being connected to higher-level open-loop and closed-loop control systems via digital interfaces.

In current systems the standard speed interface is one in which the speed command is given by the higher-level automation system and is tracked by the drive. For monitoring, the actual speed value is generally reported back to the automation system.

So that the digital field bus interface can also be used for motion control with multiple axes in decentralised automation concepts, the current standard field buses must be supplemented by specific properties.

The following requirements must be met:

Clock synchronization

In the case of a central motion controller, which performs interpolation and position control, the control circuit must be connected via the bus. In the setpoint direction the speed setpoint is transmitted to the drive. In the actual value direction the drive returns the actual position value. In order to be able to achieve sufficiently high circuit gain for the dynamic required, the dead times must be small and above all absolutely constant. If the motion control task requires coordination of several axes, the position actual value must be recorded exactly simultaneously and evaluated synchronously in the motion controller, and the setpoints must take effect exactly simultaneously in the axes. Actual value recording, transmission and setpoint setting are therefore clock synchronous with the position controller.

New functions of the PROFIdrive-Profile Version 3

This document contains the relevant extracts from the Profi-Drive-Profil document (PROFIBUS Nutzerorganisation e. V., Order no.: 3.171, http://www.profibus.com), in which the use of clock synchronous transmission, of cross traffic and a position encoder interface and the standardisation and configuration of the setpoints and actual values for the drives are manufacturer-neutral and openly standardised.

Definitions

General

- Output data:
  Data which a slave receives cyclically from the master and forwards to the slave application or the I/O's.
- Input data:
  Data sent cyclically to the master by a slave.
- Process data:
  For drives, all input and output data
- Technological functions:
  Controls a**nd** sequence control for automation of application-specific processes

Clock synchronization

- Synchronization:
  Creating synchronism (simultaneity, time consistency)
- Clock synchronization:
  Clock synchronization refers to the synchronization of the sample times of the control with the connected drives.
- Clock synchronous application:
  in the control software in digital drives and control system. The starting times and the length of the sampling times in various devices are synchronized exactly with each other.
- Equidistance:
  The same distance. The bus cycle time is always constant. Any free bus time is filled up with blank telegrams.
- Isochronous mode:
  Profibus service for clock synchronization; produces a time-constant, i.e. equidistant bus cycle with a clock pulse signal at the start of the cycle.

8.2.9.1 Incorporation of drives in automation systems / plant characterization

This section presents the different variants for incorporation of drives in automation systems.

Application classes

Nowadays, drive applications are implemented in many different ways. The following table defines the various application classes in which drives are used. The application classes are typical examples from the total spectrum of electrical drive engineering and are not necessarily covered by a specific equipment characteristic.

	Application class	Interface	Functions 2)
1	Standard drive	n-set, i-set	Cyclical interface 1)
2	Standard drive with distributed technology controller (continuous process)	Technological set/actual values (command variable)	Cyclical interface with cross traffic 1)
3	Basic positioning drive with distributed position control and interpolation	pos-set, travel tasks	Cyclical interface 1)
4	Positioning with central interpolation and position control Optional: DSC (Dynamic Servo Control)	n-set x-actual additional for DSC: Δx (x_{err}), K_V (k_{PC})	Cyclical interface clock synchronous encoder interface, DSC (see chapter 2.4)
5	Positioning with central interpolation and distributed position control	x-set	Cyclical interface clock synchronous 3)
6	Motion control in clocked processes or distributed angular synchronism	Command variable, motion commands	Cyclical interface clock synchronous and with cross traffic

1) The cyclical interface can also be operated clock synchronously if, for example, simultaneity of action in several drives is required.

2) For all application classes: Acyclical interface for parameters, diagnosis, identification

3) This application class is not described in this document.

Table 8.2-13 Application classes

NOTE

When the MASTERDRIVES unit is used as PROFIdrive V3 slave, only application classes 1 and 4 are used!
Several MASTERDRIVES can be connected to **one** PROFIdrive V3 master in class 1 as slave (Monomaster operation).

Application class 1:

Standard drive (Standard telegram 1 and 2)

In the simplest case the drive is controlled via a main setpoint (e. g. speed setpoint) via PROFIBUS (Figure 1). The complete speed control takes place in the drive controller. The automation device includes all the technological functions for the automation process. PROFIBUS acts only as transmission medium between the automation system and drive controller. The normal cyclical data communication of the PROFIBUS-DP is used (Data Exchange). This application is primarily used in the area of classic drive technology (e.g. materials handling technology). A PLC is used mainly as the automation system. Clock synchronism and cross traffic on the bus system are not necessary for this application class.

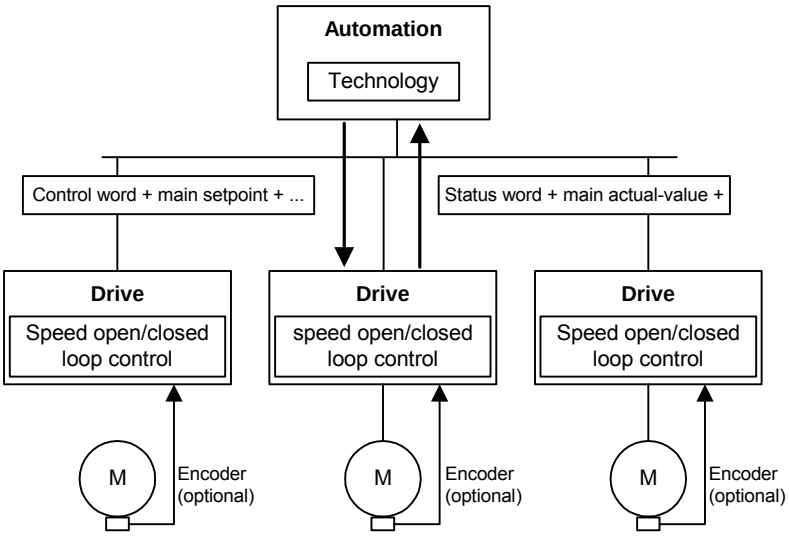

Fig. 8.2-28 Application class 1

Application class 4

Positioning with central interpolation and position control (standard telegram 3 to 6)

Application class 4 (Figure 2) handles the position control through PROFIBUS-DP. Drive applications for handling equipment and robot applications often require a coordinated motion cycle by several drives. The motion control is mainly implemented via a central automation unit (NC). These controls calculate special setpoint profiles for each drive, so that certain tracks can be travelled through the combined action of several drives (for example for the XYZ axis). The automation system comprises not only the necessary technology functions for the automation process but also the functions for interpolation and position control of the drive. Speed setpoints and actual values and actual position values are exchanged via PROFIBUS-DP. The drive controller essentially only comprises the algorithms for speed control and recording of actual position values. As position control is carried out via the bus system, this variant places very high demands on the clock synchronisation of the bus system.

To increase the stiffness and dynamism of the control circuit, the DSC functionality can be used additionally.

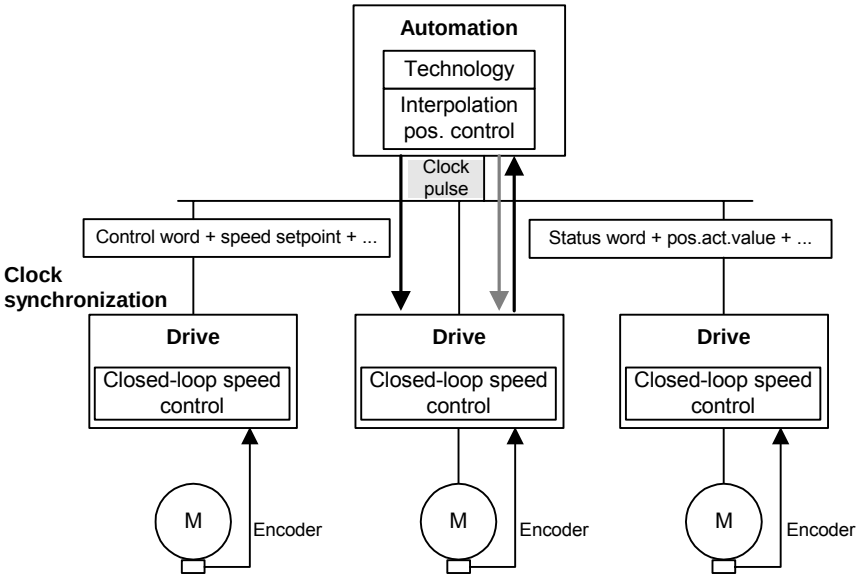

Fig. 8.2-29 Application class 4

Clock synchronous monomaster operation (main application case)

With this operation the drives make high demands on time synchronism at the bus. Through an isochronously transmitted global control the master class-1 (e.g.SIMOTION) passes on clock pulse information to the slaves (MASTERDRIVES), which synchronise themselves with this pulse.

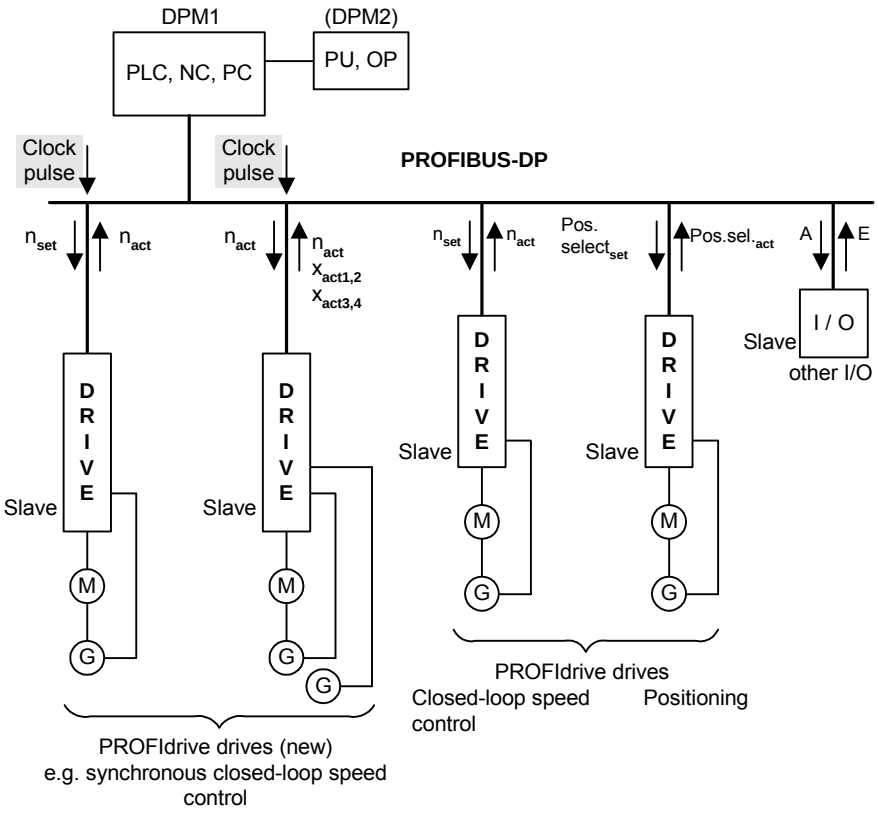

Fig. 8.2-30 Clock synchronous monomaster operation (DPM1)

The times for the setpoint transfer and actual value recording of the slaves and the time of the control by the higher-level master can take place through time parameters. The time parameters relate to the clock pulse.

In the DP cycle there must be sufficient time for the following communication elements:

- cyclical data exchange with all slaves on the bus
- a non-cyclical data channel (DPV1)
- telegram repeats
- diagnosis request

A local control device (PU, OP) at the DPM1 must communicate with the slaves via the DPM1 master.

8.2.9.2 Communication model

Clock synchronous communication

Clock synchronous communication is implemented by the use of an isochronous clock pulse signal on the bus system. This cyclical, isochronous pulse is transmitted as global control signal by the master to all bus participants. Master and slave can thus synchronise their applications to this signal.

Special error mechanisms in every participant permit stable communication even with sporadic failure of the system pulse.

For drive technology the clock synchronous communication forms the basis for drive synchronization. For this not only is the telegram traffic on the bus system implemented in an isochronous time slot, but also the internal control algorithms, such as the speed and current controllers in the drive or the contollers in the higher-level automation system, are synchronized in time.

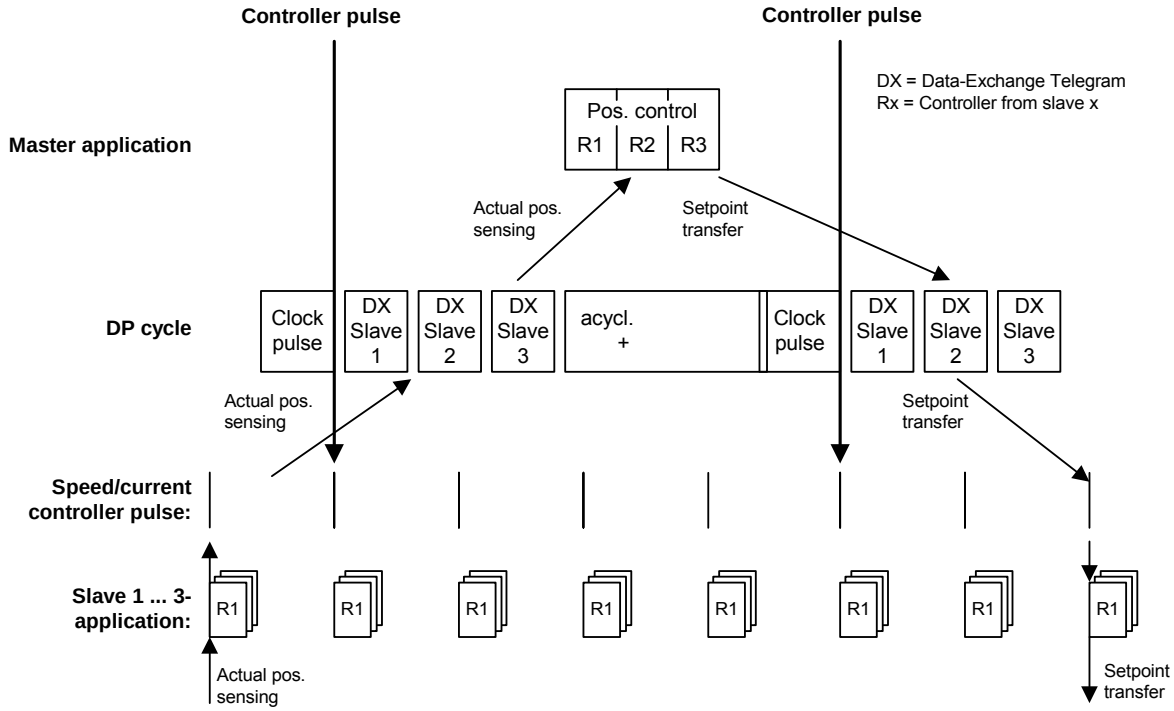

Fig. 8.2-31 Clock synchronous communication

8.2.9.3 Drive control

Commands (control words)

Control word 1 Contents of the bits in PROFIdrive control word 1. The existing bits are contained in MASTERDRIVES control word 1 (see also Chapter 10.1).

Bit	Meaning	
	Operating mode speed control	**Operating mode positioning**
0	ON / OFF 1	
1	Operating condition / OFF 2	
2	Operating condition / OFF 3	
3	Enable operation / disable operation	
4	Operating condition / disable ramp-function generator	Operating condition / reject travel task
5	Enable ramp-function generator / stop ramp-function generator	Operating condition / pause
6	Enable setpoint / disable setpoint	Activate travel task (edge)
7	Acknowledge / no meaning	
8	Inching 1 ON / Inching 1 OFF	
9	Inching 2 ON / Inching 2 OFF	
10	Control from PLC / no control	
11	Device-specific	Start referencing / terminate referencing
12 - 15	Device-specific	

Explanation: To the left of the forward slash is the meaning for bit value = 1, to the right that for bit value = 0.

Control word 2 Contents of the bits in PROFIdrive control word 2.

IMPORTANT **This is different from the previous MASTERDRIVES control word 2.**

Bit	Meaning
0 - 11	Device-specific
12 - 15	Master life sign for clock synchronization

8.2.9.4 Checkback messages (status words)

Status word 1 Contents of the bits of PROFIdrive status word 1. The existing bits are contained in MASTERDRIVES status word 1 (see also chapter 10.2).

Bit	Meaning	
	Operating mode speed control	Operating mode positioning
0	Ready to start / Not ready to start	
1	Ready for operation / Not ready for operation	
2	Operation enabled / Operation disabled	
3	Fault / Fault-free	
4	no OFF 2 / OFF 2	
5	no OFF 3 / OFF 3	
6	Start disabled / start not disabled	
7	Warning / no warning	
8	Setpoint / actual in tolerance range **/** Setpoint/actual not in tolerance range	no tracking error / tracking error
9	control required / local operation	
10	f or n reached / f or n not reached	set position reached / outside set position
11	device-specific	Reference point set / no reference point set
12	device-specific	setpoint acknowledgment (edge)
13	device-specific	drive stationary / drive travelling
14 - 15	device-specific	

Explanation: To the left of the forward slash is the meaning for bit value = 1, to the right that for bit value = 0.

Status word 2 Content of bits in PROFIdrive status word 2.

IMPORTANT **This differs from the previous MASTERDRIVES status word 2.**

Bit	Meaning
0 - 11	Device-specific
12 - 15	Slave life sign for clock synchronization

8.2.9.5 Setpoints / Actual values

Both the setpoints on the drives and the actual values from the drives are transmitted as PZD (process data). Process data transmission takes place by means of the Data Exchange Service.

Standard signals

All the abbreviations for the standard telegrams are explained below.

Abbreviation	Meaning	Length [16-/32-Bit]	Description
STW1	Control word 1	16	see section 8.2.9.3
ZSW1	Status word 1	16	see section 8.2.9.4
STW2	Control word 2	16	see section 8.2.9.3
ZSW2	Status word 2	16	see section 8.2.9.4
NSOLL_A	Speed setpoint A	16	
NIST_A	Speed actual value A	16	
NSOLL_B	Speed setpoint B	32	
NIST_B	Speed actual value B	32	
G1_STW	Encoder-1 control word	16	see section 8.2.9.9
G1_ZSW	Encoder-1 status word	16	see section 8.2.9.9
G1_XIST1	Encoder-1 position actual value-1	32	see section 8.2.9.9
G1_XIST2	Encoder-1 position actual value-2	32	see section 8.2.9.9
G2_STW	Encoder-2 control word	16	see section 8.2.9.9
G2_ZSW	Encoder-2 status word	16	see section 8.2.9.9
G2_XIST1	Encoder-2 position actual value-1	32	see section 8.2.9.9
G2_XIST2	Encoder-2 position actual value-2	32	see section 8.2.9.9
XERR	Control error	32	
KPC	Position controller gain factor	32	

Table 8.2-14 Standard signals– Abbreviations

Standard telegrams, see Subsection 8.2.7.3.

8.2.9.6 Dynamic Servo Control (DSC)

Features

This function improves the dynamic of the position control circuit, in that it minimizes the dead times which normally occur with a speed setpoint interface. For this only a relatively simple extension of the transmitted setpoints and an additional feedback network in the drive are needed.

The function is upwardly compatible with the speed setpoint interface. If necessary this can be switched to the speed setpoint interface during operation.

Structure

The control circuit based on the speed setpoint interface generally has the following structure:

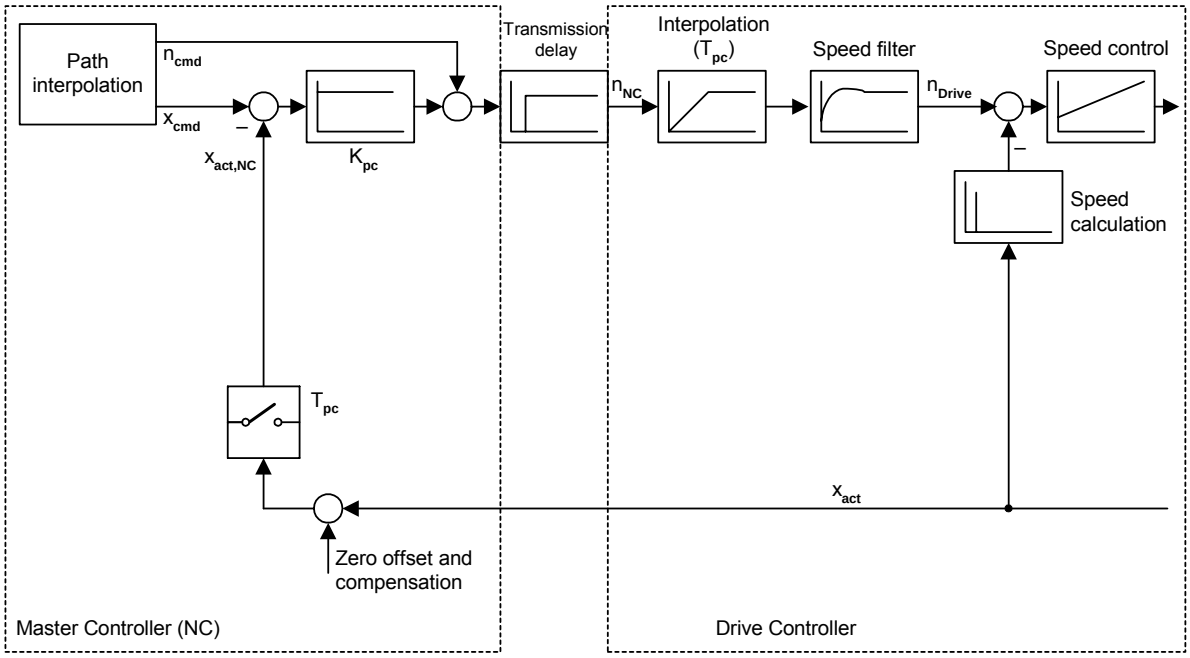

n_{cmd} : speed command
x_{cmd} : position command
x_{err} : position error command
x_{act} : actual position
T_{pc} : position controller sampling time (= T_{MAPC})
K_{pc} : position controller gain

Fig. 8.2-32 Structure of the position control circuit based on the speed setpoint interface without DSC

With DSC the actual position calculated inside the drive is also fed back directly:

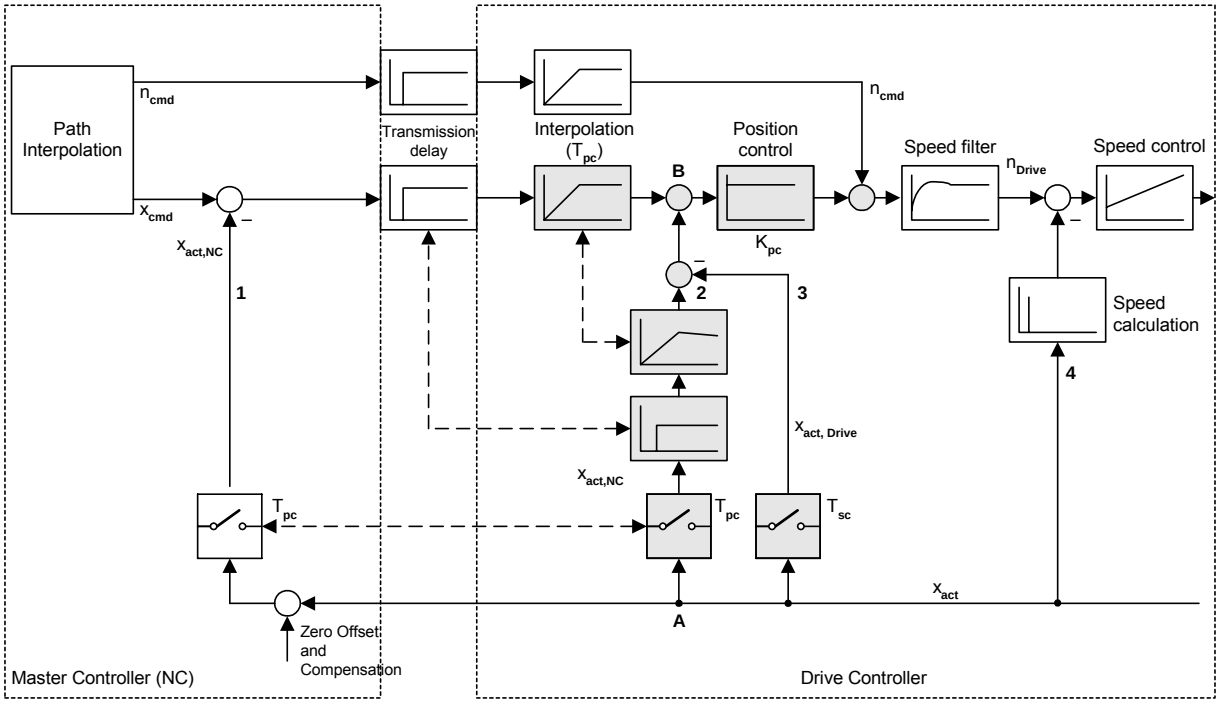

n_{cmd} : speed command
x_{cmd} : position command
x_{err} : position error command
x_{act} : actual position
T_{sc} : speed controller sampling time
T_{pc} : position controller sampling time (= T_{MAPC})
K_{pc} : position controller gain

Fig. 8.2-33 Structure of the LR circuit based on the speed setpoint interface with DSC

For this to be possible, the control error calculated in the master is transmitted as well as the speed setpoint. The additional feedback network can use the internal formats in the drive for position presentation and is thus independent of the position presentation in the master. The above presentation assumes that the network is calculated in the speed controller sampling time T_{SC} which will be possible in many cases. In this way the maximum possible dynamic improvement is achieved. However, greater clock times T are also possible, if the calculation time is short
($T_{SC} \leq T \leq T_{PC}$).

Operation

The structure contains a total of three feedback branches for the actual position value (No. 1, 2 and 3). Feedback branch no. 2 compensates fully for the action of no. 1 in respect of the actual value transmitted by the drive x_{act} , so that the dead time in branch no. 1 no longer has to be considered for the stability of the position control circuit. As a result, the position control circuit is initially open. Feedback branch no. 3 closes the circuit again, but with a shorter delay, so that greater gains can be set.

The absolute reference of the position actual value is only created in the master (addition point "Zero offset and compensation"). The same absolute reference is contained in the position command x_{cmd} . The control error calculated in the master x_{err} thus remains free of zero points. The drive needs to know nothing about zero points and reference points.

Interface

In the setpoint direction two additional signals are transmitted:

1. Controller error x_{err}
2. Position controller gain factor k_{pc}

The standard telegrams 5 and 6 defined for the function Dynamic Servo Control (DSC) are explained further in section 8.2.7.3.

If both signals x_{err} or k_{pc} are configured, the feedback network in the drive is activated. If only one of the two signals is projected, it is assumed that this serves other purposes and the feedback network is not activated.

The position controller gain K_{PC} transmitted via the Profibus has the unit 1/1000 1/s.

Operating statuses

From the drive point of view there are two operating statuses, which can be distinguished on the basis of $k_{pc} = 0$ or $k_{pc} \neq 0$:

1. $k_{pc} = 0$: feedback network inactive, position control circuit in the drive opened. The master normally uses this to open the position control circuit fully, e.g. in spindle operation or with errors. However, it can also switch back to conventional position control in this way, without re-configuring the drive. The drive can assume that $x_{err} = 0$ is being transmitted. The speed setpoint is entered via n_{cmd} .
2. $k_{pc} \neq 0$: feedback network active, position control circuit is enclosed in the drive. Via n_{cmd} a speed pre-control value is entered, which may also be zero.

A switch between these two statuses can be made by the master at any time. The master can also alter the value of k_{pc} at any time, e.g. in order to make dynamics adjustments in gear changes or compensation for non-linear gears.

Boundary conditions

Feedback branch 2 must exactly simulate the action of feedback branch 2 between points A and B. Both branches must

1. work with an actual value originating from the same time and scanned with the same frequency
2. display the same deceleration
3. contain the same fine interpolation

This is indicated by the broken arrows in the structure diagram.

The speed filter shown in the structure diagram is optional and has nothing to do with the DSC function. It has been drawn in to make the difference from conventional position control easier to recognize.

Sample application

Linking the MASTERDRIVES MC to SIMOTION using standard telegram 5.

Fig. 8.2-34 shows an overview of the interconnection required for standard telegram 5. This connection is made using the scriptfile on the SIMOTION CD:

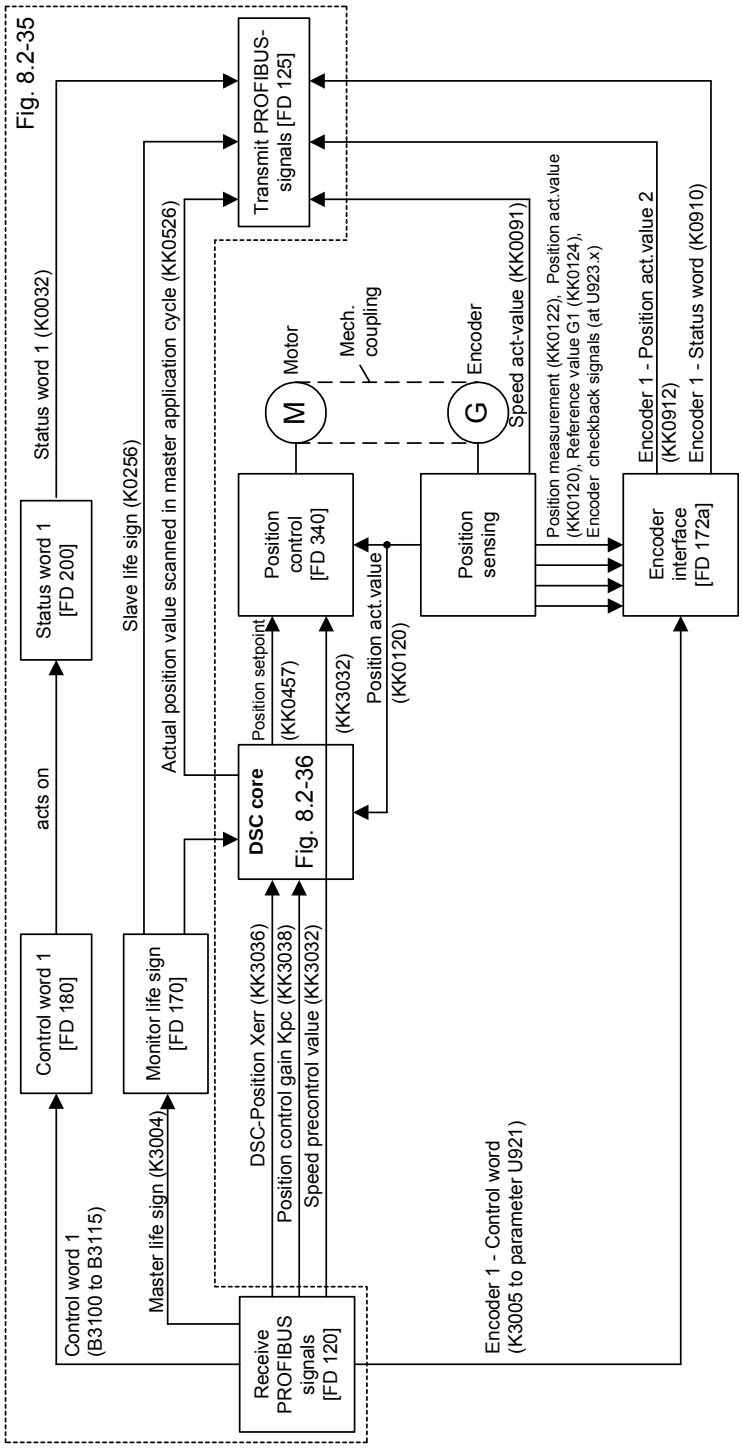

Fig. 8.2-34 Block diagram: MASTERDRIVES as PROFIdrive version 3 slave

In Fig. 8.2-35 you see on the left reception of the setpoints and control signals from the Profibus, on the right the transmission of actual values and status data to the Profibus, as is specified in the standard telegram.

In the centre of Fig. 8.2-35 the meaning and softwiring of the individual bits in control word 1 are presented. At the bottom of Fig. 8.2-35 is the monitoring of the master life sign, the creation of the binector “master application pulse“ and the slave life sign.

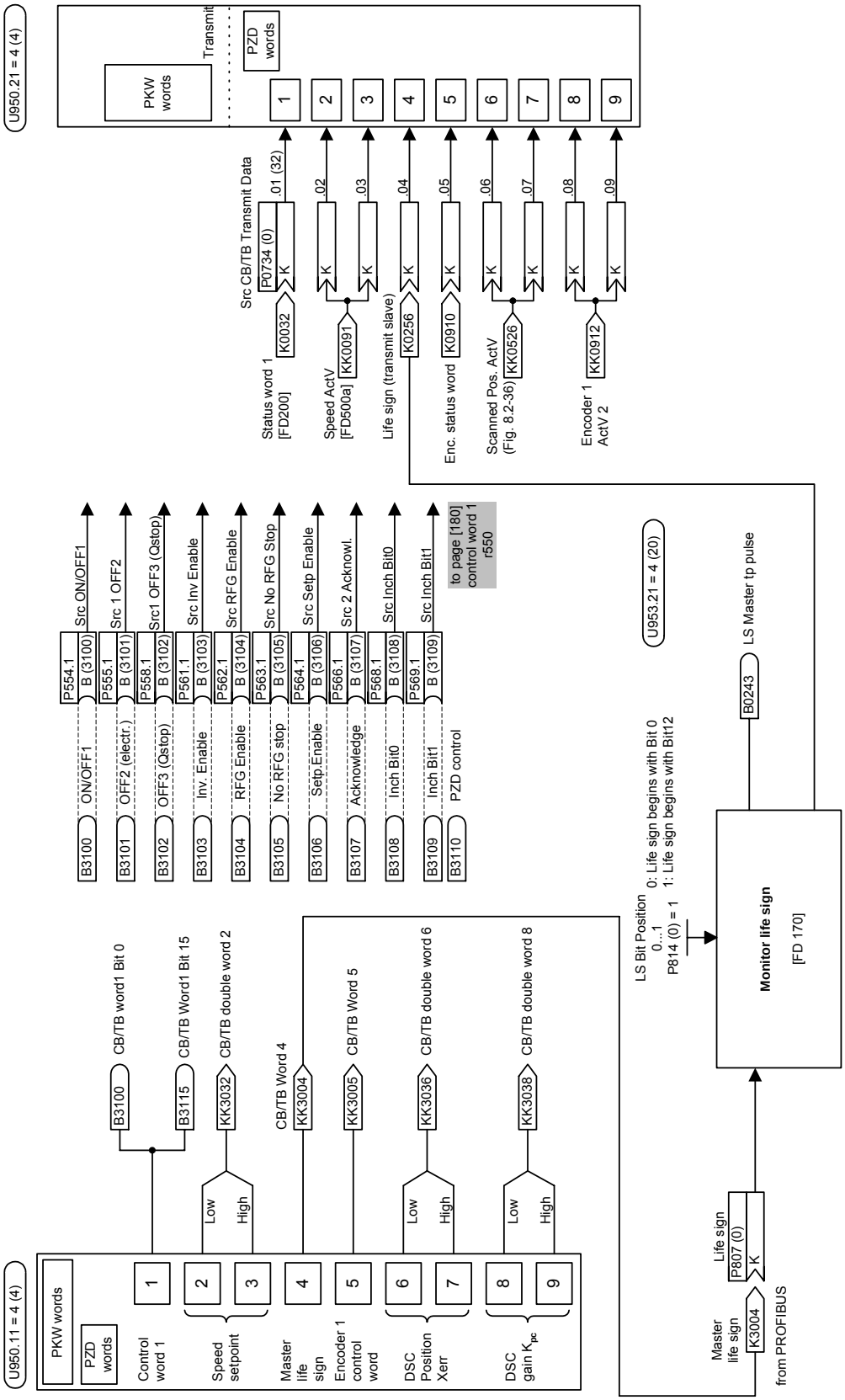

Fig. 8.2-35 PROFIBUS communication

Implementation of DSC with free blocks
(see Fig. 8.2-36)

In MASTERDRIVES free calculating blocks are available, with the aid of which the DSC function is implemented.

The individual elements of this implementation are described below:

Shift multiplier top centre

The shift multiplier is used for conversion of the DSC gain DSC_GAIN from an integer to a percentage value, which in turn is needed as input for the KP adjustment position controller.

Switch bottom centre

If the master application pulse (MAPC) is a multiple of the Profibus (DP) pulse, the relevant position actual value, which enters the position controller on the master side, must be stored internally. This is achieved by scanning the actual position value synchronously with the life sign of the Profibus master.

Delay element bottom right

This dead time element delays the scanned actual position value. The dead time must be selected according to the action time of a new actual position value via the master position controller. With the combination of SIMOTION as bus master and MASTERDRIVES as slave this dead time in our experience is always 4 DP cycles, so the value 4 should be entered in U401.

Adder centre right

With the aid of this adder the current position setpoint is calculated from the DSC position Xerr and the delayed actual position value.

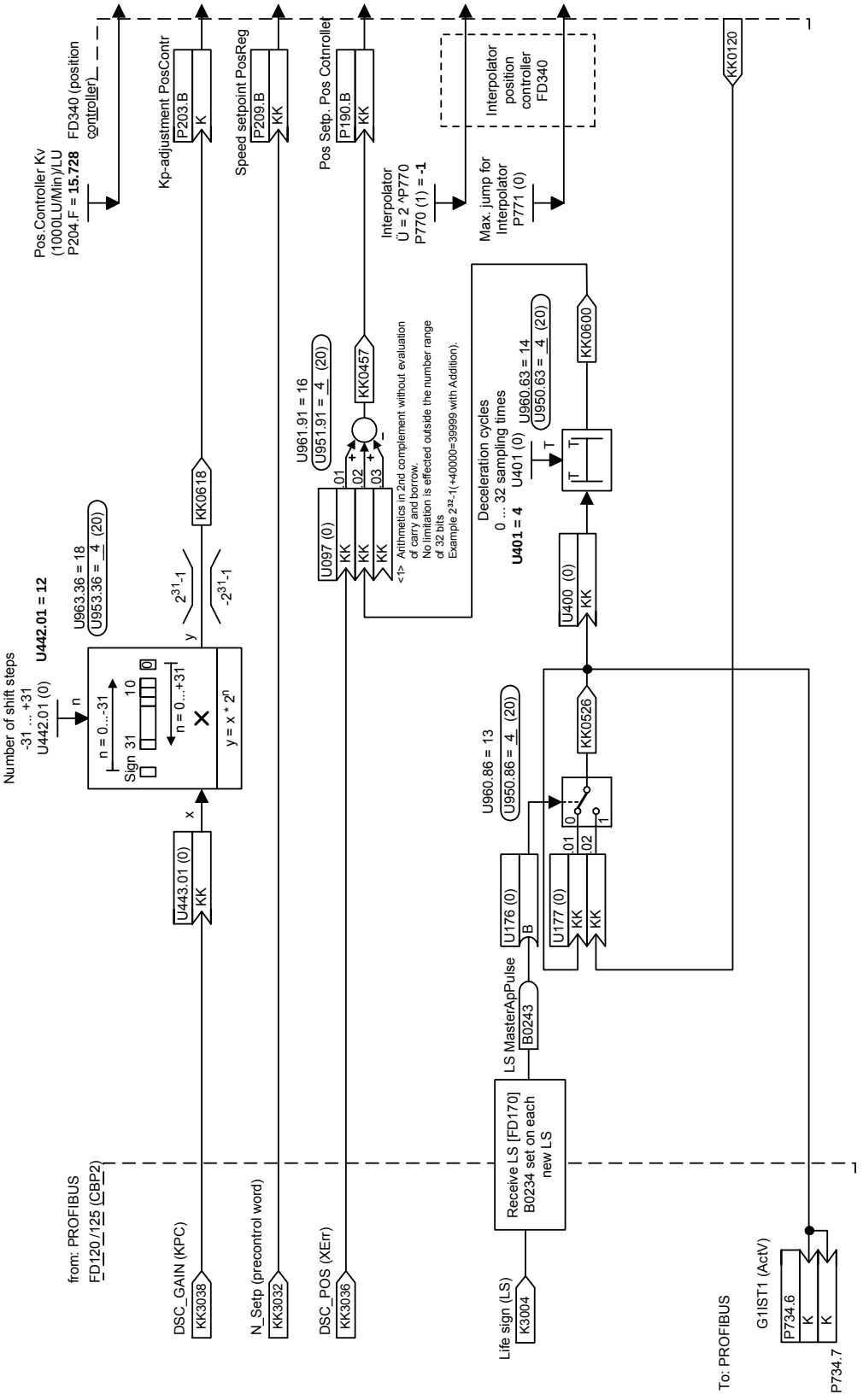

Fig. 8.2-36 DSC core

8.2.9.7 Communication interface

Node address

P918: Node address

Value range 0 – 125 (126 is reserved for start-up purposes)

The node addresses 0, 1 and 2 are generally occupied by master and configuration tools and therefore should not be used for slaves on the PROFIBUS. Address 3 is the first appropriate node address to be used for a slave on the PROFIBUS.

8.2.9.8 Clock synchronous application

Course of an isochronous DP cycle

Example (simplest DP cycle, standard case for MASTERDRIVES)

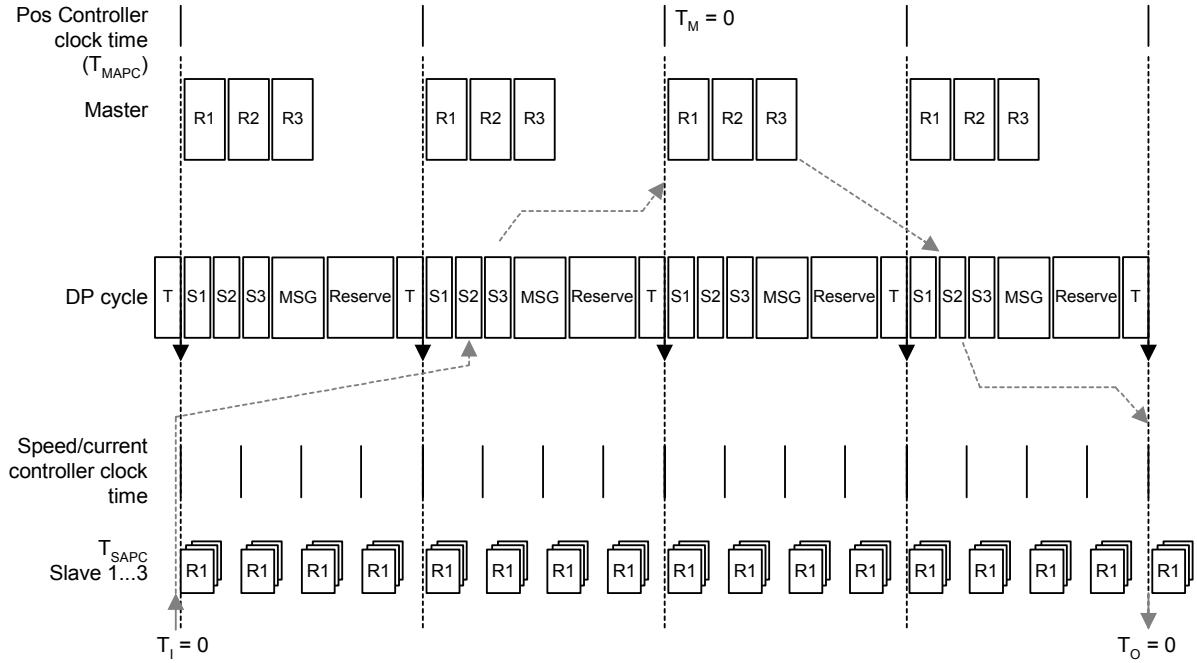

Fig. 8.2-37 Example: simplest DP cycle

In this example four DP cycles are needed for a response in the position control circuit.

- 1. Actual value recording (in slave)
- 2. Actual value transmission (slave -> master)
- 3. Position controller (in master)
- 4. Setpoint transmission (master -> slave)

This model makes few demands on the computing output of the master, but leads to an increase in the control-specific dead time:
Dead time = 4 * T_{DP}.

8.2.9.9 Encoder interface (from SW 1.6)

Process data of the encoder interface

The encoder interface consists of the following process data:

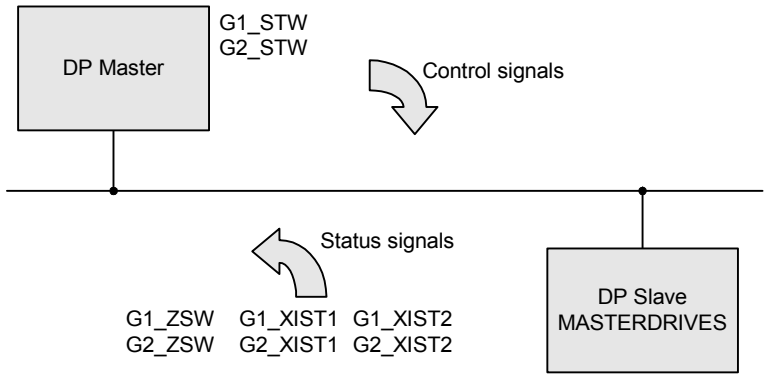

NOTE:
G1_ ... Encoder 1 -> Motor encoder
G2_ ... Encoder 2 -> External enc.

Fig. 8.2-38

NOTES

- The process data of the encoder interface can be incorporated in the telegram via the process data configuration
  Encoder 1: Standard telegram 3, 4, 5, 6
  Encoder 2: Standard telegram 4, 6

  The description of these process data can be obtained from the literature:
  Literature: /PPA/, PROFIDRIVE Profil Antriebstechnik (order no. 3.171) Chapter 4.6.
- For operation of a MASTERDRIVES MC on SIMOTION or another PROFIdrive Master using standard telegrams 3 to 6, the encoder interface in the frequency converter according to PROFIdrive Profil Antriebstechnik Version 3 should be used.
- The encoder interface uses the basic unit functionality of MASTERDRIVES MC. The description can be taken from this Compendium on the basis of the function diagrams.

Gx_STW
Encoder x-control word

x: Place-marker for encoder 1or 2 to control the encoder functionality

Bit	Value	Meaning	Comments
0 1 2 3	1 1 1 1	Functions: Reference marks Search or flying measurement	Function 1-4: Request reference marks search (Bit 7 = 0) Bit 0: Function 1 (Reference mark 1) Bit 1: Function 2 (Reference mark 2) Bit 2: Function 3 (Reference mark 3) Bit 3: Function 4 (Reference mark 4) Request flying measurement (Bit 7 = 1) Bit 0: Function 1 (Scanner 1 pos. edge) Bit 1: Function 2 (Scanner 1 neg. edge) Bit 2: Function 3 (Scanner 2 pos. edge) Bit 3: Function 4 (Scanner 2 neg. edge)
4-6	1-3		Command: 0: ---- 1: Activate function x Bit 4=1 2: Read value x Bit 5=1 3: Terminate function x Bit4 and Bit5 =1 4-7: reserved
7	0 / 1		Mode: Bit 7 = 0: Reference marks search (zero mark or zero mark and BERO) Bit 7 = 1: Flying measurement (only BERO)
8			reserved
9			reserved
10			reserved
11	0 / 1	Reference point mode	Reference point mode: Bit 11 = 0: Set reference point Bit 11 = 1: Shift reference point
12	1	Request to set / shift reference point	Request to set/shift reference point. The setting or shift value can be adjusted according to the device. Consideration in Gx_XIST1, Gx_XIST2
13	1	Request absolute value cyclically	Request for additional cyclical transmission of the absolute position actual value in Gx_XIST2. Use e.g. for: - additional measuring system monitoring - synchronization in run-up

Bit	Value	Meaning	Comments
14	1	Activate parking encoder	Request to switch off monitoring of the measuring system and actual value recording in the drive. It is then possible to remove one encoder (or motor with encoder) on the machine, without having to change the drive configuration, or without causing a fault. **NOTE:** Before the encoder is de-parked, an acknowledgement of the outstanding encoder errors must be carried out (ACKNOWLEDMENT to the PMU) **WARNING:** **Except absolute value encoder P183.1 = xx2x.** **Here the parking of the encoder is terminated with error!** **(Error code = 1)** Absolute value encoders may never be removed from the frequency converter while live!
15	1	Acknowledge encoder error	Request to return a encoder error (Gx_ZSW, Bit15) .

Table 8.2-15 Encoder control word

Re function 1 - 4 (BIT 0 to BIT3):

The function bits are forwarded to the binectors B910 to B917 (see also FP172x) for optional functionalities.

G1STW Bit 0 =	B910	G2STW Bit 0 =	B914
Bit 1 =	B911	Bit 1 =	B915
Bit 2 =	B912	Bit 2 =	B916
Bit 3 =	B913	Bit 3 =	B917

Applies only to flying measurement (configuration of digital input)

Bit	Meaning		
0	Function 1	Digital input 4 enabled	Scanner positive edge (B929)
1	Function 2	Digital input 4 enabled	Scanner negative edge (B930)
2	Function 3	Digital input 5 enabled	Scanner positive edge (B926)
3	Function 4	Digital input 5 enabled	Scanner negative edge (B927)

NOTE

- Bit x = 1 Function active
- Bit x = 0 Function inactive
- In P647.B for Dig. Inp. 4 or. P648.B for Dig. Inp. 5 it is set whether there is a configuration of the position measurement memory per binector.
  In that case the P647/P648 must be set to 5 (see also function diagram 90 terminals / digital inputs).
- The use of the configuration of the digital inputs is created per binector circuit (see also FP172x).

Re function set / shift reference point (BIT 12):

- Set reference point motor encoder is issued to B920
- Shift reference point motor encoder is issued to B922
- Set reference point external encoder is issued to B921
- Shift reference point external encoder is issued to B923

NOTE

The use of this function is created per binector circuit (see also FD172x).

Input Src measured value valid U923.7 (G1) and U923.8 (G2):

The binector 70 or 71 measured value is validly evaluated.

If a measuring command is generated without valid measured value, it leads to the error "encoder interface" (status SD3).

The error code 4 to 7 is generated, depending on the status of the encoder interface.

Encoder status word Encoder x-status word:
x: place marker for encoder 1 or 2
-> to indicate statuses, acknowledgements, errors, etc.

Bit	Value	Meaning	Comments
0 1 2 3	1 1 1 1	Functions: Reference marks – search or	Status: Function 1-4 active (Reference marks search / Flying measurement) Bit 0: Function 1 (Reference mark 1 / Scanner 1 pos. edge) Bit 1: Function 2 (Reference mark 2 / Scanner 1 neg. edge) Bit 2: Function 3 (Reference mark 3 / Scanner 2 pos. edge) Bit 3: Function 4 (Reference mark 4 / Scanner 2 neg. edge) Simultaneous setting of Bit 4-7 -> Terminate function 1-4 (device-specific error code in Gx_XIST2)
4 5 6 7	1 1 1 1	Flying measurement	Status: Value 1-4 present (Reference mark / scanner) Bit 4: value 1 (Reference mark 1 / scanner 1 pos. edge) Bit 5: value 2 (Reference mark 2 / scanner 1 neg. edge) Bit 6: value 3 (Reference mark 3 / scanner 2 pos. edge) Bit 7: value 4 (Reference mark 4 / scanner 2 neg. edge) Simultaneous setting of Bit 0-3 -> Terminate function 1-4 (device-specific error code in Gx_XIST2)
8	1	Scanner 1 deflected	Static status scanner 1 (U923.5)
9	1	Scanner 2 deflected	Static status scanner 2 (U923.6)
10			reserved, set to zero
11			encoder error acknowledgement in processing
12	1	Set/shift reference point executed	Acknowledgement for “Request set / shift reference point” Gx_STW, Bit 11, 12). Consideration at Gx_XIST1, Gx_XIST2
13	1	Transmit absolute value cyclically	Acknowledgement for "Request absolute value cyclically" (Gx_STW, Bit 13). Cyclical transmission of the absolute actual position value in Gx_XIST2.
14	1	Parking encoder active	Acknowledgement for "Activate parking encoder" (Gx_STW, Bit 14).
15	1	Encoder error	Indicates an error of the encoder or the actual value recording. A device-specific error code is in Gx_XIST2. If several errors occur, the first one is displayed.

Table 8.2-16 Encoder status word

Status diagram, statuses and transitions of encoder interface

Status diagram:

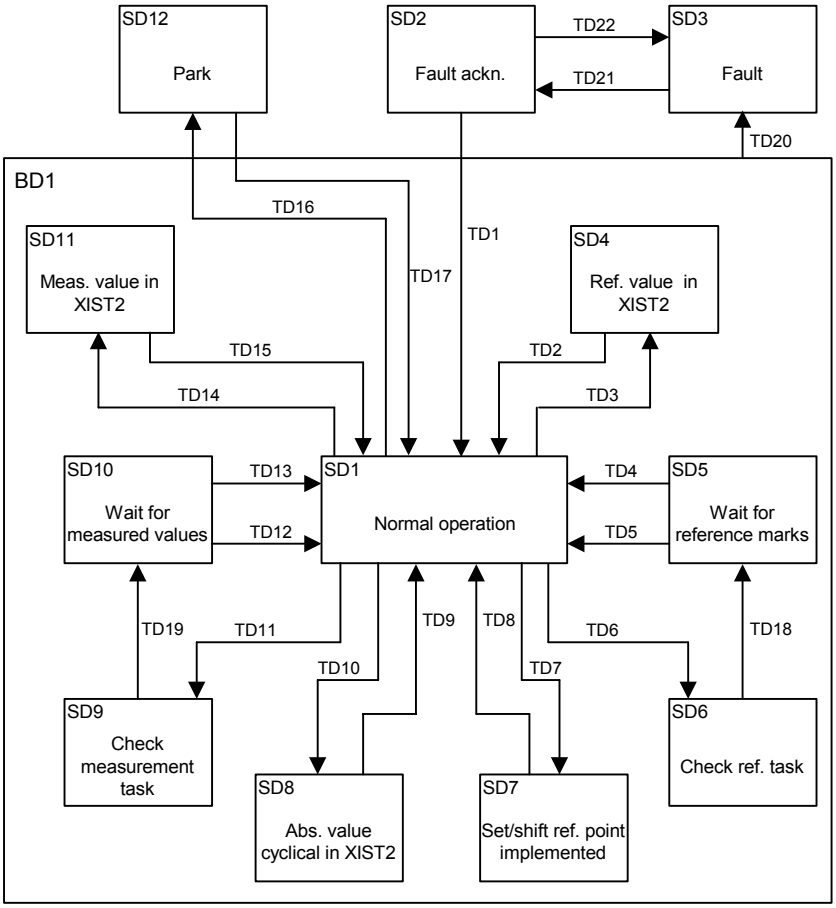

Fig. 8.2-39 Status diagram of encoder interface showing the statuses and transitions

Statuses		Action	Explanation	Code
SD1	Normal operation	None	Encoder interface is working normally	Gx_ZSW-Bit 0-7 = 0000 0000b, Gx_ZSW-Bit 10-15 = 00 0000b
SD2	Error acknowledgement	Error is acknowledged	Error acknowledge-ment is being processed.	Gx_ZSW-Bit 11 = 1
SD3	Error	Error is on	An error is on.	Gx_ZSW-Bit 15 = 1, Gx_ZSW-Bit 11 = 0
SD4	Reference value in XIST2	Load reference value in XIST2	The reference value in XIST2 is loaded.	Gx_ZSW-Bit 4-7 <> 000b
SD5	Wait for reference marks	Wait for reference marks	The reference mark is expected.	Gx_ZSW-Bit 0-3 <> 0000b
SD6	Check reference task	Check reference task	The reference task is checked.	None
SD7	Set / shift reference point executed	Set or shift reference point	The reference point is either set or shifted.	Gx_ZSW-Bit 12 = 1
SD8	Absolute value cyclical in XIST2	Load absolute value cyclically in XIST2	An absolute value in XIST2 is loaded cyclically.	Gx_ZSW-Bit 13 = 1
SD9	Check measure-ment command	Check measurement task	The measurement task is checked.	None
SD10	Wait for measured values	Wait for measured value	The measured value is expected.	Gx_ZSW-Bit 0-3 <> 0000b
SD11	Measured value in XIST2	Load measured value in XIST2	The measured value in XIST2 is loaded.	Gx_ZSW-Bit 4-7 <> 000b
SD12	Park	None	The encoder interface is in a condition in which it is not reporting an error and is not participating in the bus.	Gx_ZSW-Bit 14 = 1

Change of status:

	from	to	condition
TD1	SD2 (error acknowledgement)	SD1 (normal operation)	Gx_STW-Bit 15 = 0 and error corrected
TD2	SD4 (Reference value in XIST2)	SD1 normal operation	Gx_STW-Bit 4-6 = 000b
TD3	SD1 (Normal operation)	SD4 (reference value in XIST2)	Gx_STW-Bit 7 = 0 and Gx_STW-Bit 4-6 = 010b and Gx_STW-Bit 0-3 <> 0000b and Ref value_X_found = 1
TD4	SD5 (Wait for reference marks)	SD1 (normal operation)	Gx_STW-Bit 4-6 = 000b and reference marks found
TD5	SD5 (Wait for reference marks)	SD1 (normal operation)	Gx_STW-Bit 4-6 = 011b
TD6	SD1 (Normal operation)	SD6 (check reference task)	Gx_STW-Bit 7 = 0 and Gx_STW-Bit 4-6 = 001b and Gx_STW-Bit 0-3 <> 0000b
TD7	SD1 (Normal operation)	SD7 (set/shift reference point)	Set reference point: Gx_STW-Bit 12 = 1 and Gx_STW-Bit 11 = 0 or Shift reference point: Gx_STW-Bit 12 = 1 and Gx_STW-Bit 11 = 1
TD8	SD7 (Set/shift reference point)	SD1 (normal operation)	Gx_STW-Bit 12 = 0
TD9	SD8 (Absolute value cyclical in XIST2)	SD1 (normal operation)	Gx_STW-Bit 13 = 0
TD10	SD1 (Normal operation)	SD8 (absolute value cyclical in XIST2)	Gx_STW-Bit 13 = 1
TD11	SD1 (Normal operation)	SD9 (check measurement task)	Gx_STW-Bit 7 = 1 and Gx_STW-Bit 4-6 = 001b and Gx_STW-Bit 0-3 <> 0000b
TD12	SD10 (Wait for measurement task)	SD1 (normal operation)	Gx_STW-Bit 4-6 = 011b
TD13	SD10 (Wait for measurement task)	SD1 (normal operation)	Gx_STW-Bit 4-6 = 000b and measured values found
TD14	SD1 (Normal operation)	SD11 (measured value in XIST2)	Gx_STW-Bit 7 = 1 and Gx_STW-Bit 4-6 = 010b and Gx_STW-Bit 0-3 <> 0000b and measurement value_X_found = 1
TD15	SD11 (Measured value in XIST2)	SD1 (normal operation)	Gx_STW-Bit 4-6 = 000b
TD16	SD1 (Normal operation)	SD12 (parking)	Gx_STW-Bit 14 = 1
TD17	SD12 (Parking)	SD1 (normal operation)	Gx_STW-Bit 14 = 0
TD18	SD6 (Check reference task)	SD5 (wait for reference marks)	Task permitted
TD19	SD9 (Check measurement command)	SD10 (wait for measurement command)	Command permitted
TD20	from any status in BD1	SD3 (error)	Error occurred or a command is inadmissible
TD21	SD3 (error)	SD2 (error acknowledgement)	Gx_STW-Bit 15 = 1
TD22	SD2 (error acknowledgement)	SD3 (error)	Gx_STW-Bit 15 = 0 and error still exists

Error code in Gx_IST2:

Gx_XIST2	Meaning	Possible causes / description
1	Encoder sum error	The error description can be taken from the following faults (see appendix: "Faults and Warnings") (cannot be acknowledged via the encoder interface): • Fault F051 Encoder fault See r949 the 100th place for: 0xx: Motor encoder 1xx: External encoder • Fault F054 Encoder board initialization error • Internal error encoder interface • Parking with released absolute value encoder inadmissible
2	Zero mark monitoring	The error description can be taken from the following faults (see appendix: Faults and Warnings): • Fault F051 r949=x26 or r949=x27 Zero pulse Encoder See r949 the 100th place for: 0xx: Motor encoder 1xx: External encoder
4	Terminate reference mark search	• No SBP in the case of the external encoder • Valid measured values lacking (B0070 or B0071) • Acknowledge encoder error active • Parking encoder / axis active • Request absolute value cyclically active • Set/shift reference point active • Mode (BIT 7 = 1) Flying measurement active • or a reserved bit is used
5	Terminate collect reference value	• Valid measured values lacking (B0070 or B0071) • Acknowledge encoder error active • Parking encoder / axis active • Request absolute value cyclically active • Set/shift reference point active • Mode (BIT 7 = 1) Flying measurement active • or a reserved bit is used
6	Terminate flying measurement	• No SBP in the case of the external encoder • Valid measured values lacking (B0070 or B0071) • Acknowledge encoder error active • Parking encoder/axis active • Request absolute value cyclically active • Set/shift reference point active • Mode (BIT7=0) Reference marks search active • or a reserved bit is used

Gx_XIST2	Meaning	Possible causes / description
7	Terminate collect measured value	• Valid measured value lacking (B0070 or B0071) • Acknowledge encoder error active • Parking encoder/axis active • Request absolute value cyclically active • Set/shift reference point active • Mode (BIT7=0) Reference marks search active • or a reserved bit is used
8	Terminate absolute value transmission on	• EnDat-encoder (Multiturn) not usable parameter P183 is not set to xxx2 enable position recording with Multiturn.
A	Error in reading absolute track of the absolute value encoder (EnDat-encoder)	• Fault F051 Encoder fault SSI/EnDat See r949 x30...x60 0xx: Motor encoder 1xx: External encoder

Table 8.2-17 Error code in Gx_XIST2

Boundary conditions and rules for connection of encoder 1 (Motor encoder)

The following boundary conditions and rules exist:

1. The function "Referencing **only** with rough pulse" is not supported in the standard interconnections. For this measurement via the measured value memory of the basic unit must be used. If the measured value memory is to be used both for referencing and for measurement, corresponding interconnections in the basis unit via free blocks must be used.
2. The function "Referencing **only** with zero mark" must be ensured via corresponding interconnections in the basic unit using B931 "Trigger rough pulse motor encoder“.

   In this a rough pulse is produced as soon as the release of the reference point recording is switched to enabled. The next zero pulse is then recognized.

Boundary conditions and rules for connection of encoder 2 (External encoder)

1. The functions "Referencing“ and "Measured value memory" is **only** supported by the SBP (pulse encoder board) . For this the measured value memory should be used via direct input to the SBP (see function diagram 335).
2. The rough pulse in the external encoder is only evaluated directly on the encoder board (see function diagram 255).
3. The "Referencing" function with zero mark **only** is not supported.

8.2.10 Diagnosis and troubleshooting

NOTE

With regard to basic parameterization, please note the differences to the types of unit with the older function classes FC (CU1), VC (CU2) and SC (CU3). These differences are described below.

In order to make these differences clear, the parameter numbers and other deviations are either printed in dark gray or have a dark-gray background.

8.2.10.1 Evaluating the possibilities of hardware diagnosis

LED displays

The three LED displays are located on the front of the CBP. These are as follows:

- CBP operating (red)
- Data exchange with the basic unit (yellow)
- Transfer of useful data via the PROFIBUS (green)

Diagnostic LEDs give the user rapid information on the status of the CBP at any particular instant.
More detailed diagnostic information can be read out directly from the diagnostics memory of the CBP by means of a diagnostic parameter.

NOTE

During normal operation, all three LEDs light up synchronously and for the same length of time (flashing)!

The stationary status of an LED (on or off) indicates an unusual operating status (parameterization phase or fault)!

LED	Status	Diagnostic information
Red	Flashing	CBP operating; voltage supply on
Yellow	Flashing	Fault-free data exchange with the basic unit
Green	Flashing	Fault-free cyclical useful data traffic with a master, class 1, via PROFIBUS

Table 8.2-18 LED display of the CBP

LED	Status	Diagnostic information
Red Yellow Green	Flashing Flashing Off	No cyclical useful data traffic with a master, class 1, via PROFIBUS –DP due to e.g. EMC interference, bus connector pulled out, polarity reversal of connections, node number not supplied with useful data by the master. Acyclical useful data traffic with a master, class 2 (DriveES, SIMOVIS/DriveMonitor, SIMATIC OP) does not affect the green LED.

Table 8.2-19 Online operation without useful data

LED	Status	Diagnostic information
Red	Off/On	Voltage supply for CBP cut off; replace CBP or basic unit
Yellow	Off/On	Data exchange with the basic unit not possible; replace CBP or basic unit
Green	Off/On	No cyclical useful data traffic with a master, class 1, via PROFIBUS is possible; PROFIBUS cable not connected or defective

Table 8.2-20 Fault display CBP

In the following, all exceptional operating conditions are listed which are displayed as such by the CBP.

LED	Status	Diagnostic information
Red Yellow Green	Flashing Off On	CBP is waiting for the basic unit to begin initialization
Red Yellow Green	On Off Flashing	CBP is waiting for the basic unit to complete initialization
Red Yellow Green	Flashing On Off	Checksum error in flash EPROM of the CBP (Download firmware again or replace CBP)
Red Yellow Green	Flashing On On	Error in RAM test of the CBP Replace CBP (external RAM, DPRAM or SPC3-RAM defective)
Red Yellow Green	Flashing Off Off	Only CBP2 DP slave software detects serious fault Note fault number in r732.8 and inform Customer Service

Table 8.2-21 Exceptional operating conditions

LED	Status	Diagnostic information
Red Yellow Green	Off Off Flashing	Only CBP2 USS protocol has been set

Table 8.2-22 USS

8.2.10.2 Fault and alarm display on the basic unit

If faults occur during communication between the PROFIBUS and the CBP, corresponding fault or alarm messages are displayed on the PMU or on the OP of the basic unit.

Alarms

Alarm number		Meaning
First CB/TB	Second CB	
A 081	A 089	The ID byte combinations sent by the DP master in the configuration telegram do not correspond with the permitted ID byte combinations (see table 8.2-12) Consequence: No connection established with the PROFIBUS-DP master; new configuration is necessary.
A 082	A 090	No valid PPO type can be established from the configuration telegram from the DP master. Consequence: No connection established with the PROFIBUS-DP master, new configuration is necessary.
A 083	A 091	No net data or invalid net data (e.g. complete control word STW1=0) are being received by the DP master. Consequence: The process data are not being transferred to the DPR. If parameter P722 (P695) is not equal to zero, this will result in fault message F 082 being tripped (see chapter "Process data monitoring".
A 084	A 092	Telegram traffic between DP master and CBP has been interrupted (e.g. cable break, bus connector disconnected or DP master switched off). Consequence: If parameter P722 (P695) is not equal to zero, this will result in fault message F 082 being tripped (see chapter "Process data monitoring").
A 086	A 094	Failure of heartbeat counter recognized by basic unit. Consequence: Interruption of communication to the automation system
A 087	A 095	DP slave software detects serious fault. Fault number in diagnostic parameter r732.8 Consequence: Communication no longer possible. Secondary fault F082

Alarm number		Meaning
First CB/TB	Second CB	
A 088	A 096	Only CBP2 At least one configured cross-traffic encoder is not yet active or has failed. For details, see CBP2 diagnostic parameters. Consequence: If a encoder is still not active, the relevant setpoints are set to null as a substitute. If a cross-traffic encoder fails, transmission of the setpoints to the basic unit may be interrupted, depending on the setting in P715. Secondary fault F082.

Table 8.2-23 Alarm display on the basic unit

Assignment

The alarm number for the first CB/TB applies to the following configurations:

- Exactly one CBP has been plugged into slots A to G in the electronics box and no T100/T400 technology board has been plugged in
- If two CBPs have been plugged in, the alarm number applies to the one which has been plugged into the slot with the lower slot letter.

The alarm number for the second CB applies to the following configurations:

- One T100/400 technology board has been plugged in and the CBP in the electronics box has been plugged into slots A to C.
- If two CBPs have been plugged in, the alarm number applies to the one which has been plugged into the slot with the higher letter.

NOTE

The alarm A 082 / A 090 can also be displayed on the basic unit the first time the CBP is started as long as telegrams are not being exchanged with a DP master, e.g. because the bus cable has not yet been connected.

Fault displays

Fault number		Meaning
First CB/TB	Second CB	
F080	F085	Fault in the dual-port RAM Remedy: CBP probably defective, i.e. replace CBP
F081 Fault value (r949) = 0	F081 Fault value (r949) = 2	Fault in the heartbeat counter. The heartbeat counter is no longer being incremented by the CBP due to an internal fault. The CBP is not plugged in correctly or is defective Remedy: Check the connection. If necessary, replace CBP
F082 Fault value (r949) = 1	F082 Fault value (r949) = 2	Telegram failure in the dual-port-RAM (DPR). The telegram failure monitoring time set by means of parameter P722 (P695) has expired (see chapter "Process data monitoring"). The bus has been interrupted or all net data are transferred with 0 (see also A083) Remedy: Check bus cable incl. connecting plug. In the DP-master, assign values not equal to zero to control word STW1.

Table 8.2-24 Fault display on the basic unit

Assignment

The fault number for the first CB/TB applies to the following configurations:

- Exactly one CBP has been plugged into slots A to G in the electronics box and no T100/T300/T400 technology board has been plugged in.
- If two CBPs have been plugged in, the fault number applies to the one which has been plugged into the slot with the lower slot letter.

The fault number for the second CB applies to the following configurations:

- One T100/T300/T400 technology board has been plugged in and the CBP in the electronics box has been plugged into slots A to C
- If two CBPs have been plugged in, the fault number applies to the one which has been plugged into the slot with the higher letter.

8.2.10.3 Evaluating CBP diagnostic parameters

(For CBP2 diagnosis, see section 8.2.8.6)

NOTE

Please note that, for types of unit with the older function classes FC (CU1), VC (CU2) and SC (CU3), indexed parameter r731.i is to be used appropriately instead of r732.i

In order to support start-up and for service purposes, the CBP stores diagnostic information in a diagnostics buffer. The diagnostic information can be read out with the indexed parameter r732.i (CB/TB diagnosis).

If two CBPs are plugged-in in the electronics box, the diagnostic area for the second CBP begins in parameter r732 from index 33 onwards, i.e. in order to read out the diagnostic information of the second CBP, an offset of 32 must be added to the index of the first CBP as well (see table 8.2-19).

CBP diagnostic parameters

Area of the first CBP	
Meaning	**Parameter No.**
CBP_Status	P732.1
SPC3_Status	P732.2
SPC3_Global_Controls	P732.3
Counter: telegrams received without faults (only DP standard)	P732.4 (Low)
Reserved	P732.4 (High)
Counter "TIMEOUT"	P732.5 (Low)
Reserved	P732.5 (High)
Counter "CLEAR DATA"	P732.6 (Low)
Reserved	P732.6 (High)
The following diagnostic entries are overwritten if PROFIBUS-DP telegram diagnosis is selected by means of P711 / P696 (CB parameter 1)	
Counter: Heartbeat-counter fault	P732.7 (Low)
Reserved	P732.7 (High)
Number of bytes for special diagnosis	P732.8 (Low)
Reserved	P732.8 (High)
Mirroring slot Identifier 2	P732.9 (Low)
Mirroring slot Identifier 3	P732.9 (High)
Mirroring P918 (CB bus address), only low part	P732.10 (Low)
Reserved	P732.10 (High)
Counter re-configuration by CU	P732.11 (Low)
Counter initializations	P732.11 (High)
Fault detection DPS manager fault (8 bits)	P732.12 (Low)
Reserved	P732.12 (High)

Area of the first CBP	
Meaning	**Parameter No.**
Determined PPO type (8 bits)	P732.13 (Low)
Reserved	P732.13 (High)
Mirroring "DWORD-Specifier-ref"	P732.14
Mirroring "DWORD-Specifier-act"	P732.15
Counter DPV1:DS_WRITE, positive acknowledgement	P732.16 (Low)
Reserved	P732.16 (High)
Counter DPV1: DS_WRITE, negative acknowledgement	P732.17 (Low)
Reserved	P732.17 (High)
Counter DPV1:DS_READ, positive acknowledgement	P732.18 (Low)
Reserved	P732.18 (High)
Counter DPV1:DS_READ, negative acknowledgement	P732.19 (Low)
Reserved	P732.19 (High)
Counter DP/T: GET DB99, positive acknowledgement	P732.20 (Low)
Counter DP/T: PUT DB99, positive acknowledgement	P732.20 (High)
Counter DP/T: GET DB100, positive acknowledgement	P732.21 (Low)
Counter DP/T: PUT DB100, positive acknowledgement	P732.21 (High)
Counter DP/T: GET DB101, positive acknowledgement	P732.22 (Low)
Counter DP/T: PUT DB101, positive acknowledgement	P732.22 (High)
Counter DP/T-service negative acknowledgement	P732.23 (Low)
Counter DP/T: application relation, positive acknowledgement	P732.23 (High)
Reserved	P732.24
Gen-Date: day, month	P732.25
Gen-Date: year	P732.26
Software version	P732.27
Software version	P732.28
Software version: flash EPROM checksum	P732.29
Reserved	:
Reserved	P732.31

Area of the second CBP	
Meaning	**Parameter No.**
CBP_Status	P732.33
SPC3_Status	P732.34
SPC3_Global_Controls	P732.35
	:
Software-Version: Flash-EPROM-Checksum	P732.61
Reserved	:
Reserved	P732.64

Table 8.2-25 CBP diagnostics buffer

8.2.10.4 Meaning of information in the CBP diagnostic channel

(For CBP2 diagnosis, see section 8.2.8.6)

P732.1 (090H, CBP_Status)

15	14	13	12	11	10	9	8	7	6	5	4	3	2	1	0	Bit

- Bit 0
  "CBP Init": CBP is presently being initialized or is waiting for initialization from the BASE BOARD
  (normal operation: not set)
- Bit 1
  "CBP Online": CBP selected via board mounting position 2" (DPRAM Offset Address 0x54) or via board mounting position 3" (DPRAM Offset Address 0x55) by the BASE BOARD
  (normal operation: set)
- Bit 2
  "CBP Offline": CBP selected neither via board mounting position 2" (DPRAM Offset Address 0x54) nor via board mounting position 3" (DPRAM Offset Address 0x55) by the BASE BOARD
  (normal operation: not set)
- Bit 3
  Value range exceeded "CB bus address" (P918) (BASE BOARD).
  (normal operation: not set)
- Bit 4
  Diagnostic mode activated [CB parameter 1 (P711 / P696) <> 0].
  (normal operation: not set)
- Bit 8
  Incorrect identification byte transferred (incorrect configuration telegram from the PROFIBUS DP master).
  (normal operation: not set)
- Bit 9
  Incorrect PPO type (incorrect configuration telegram from the PROFIBUS DP master).
  (normal operation: not set).
- Bit 10
  Correct configuration received from the PROFIBUS DP master
  (normal operation: set).
- Bit 12
  Fatal error detected by the DPS manager SW
  (normal operation: not set)
- Bit 13
  Program in endless loop in main c (is only escaped from if a reset is made)
- Bit 15
  Program in communications online loop (is only escaped from if re-initialization is carried out by the BASE BOARD)

P732.2 (092H, SPC3_Status)

15	14	13	12	11	10	9	8	7	6	5	4	3	2	1	0	Bit

- Bit 0 Offline/Passive Idle
  0 = SPC3 is offline (normal operation)
  1 = SPC3 is in passive-idle
- Bit 1 Reserved
- Bit 2 Diag-Flag
  0 = Diagnostics buffer collected by the master
  1 = Diagnostics buffer not collected by master
- Bit 3 RAM Access Violation, memory accessed > 1.5kByte
  0 = No address violation (normal operation)
  1 = With addresses >1536 bytes, retreat made from respective address 1024 and access is made under this new address
- Bits 4,5 DP-State 1..0
  00 = Status "Wait_Prm"
  01 = Status"Wait_Cfg"
  10 = Status"DATA_EX"
  11 = Not possible
- Bits 6,7 WD-State 1..0
  00 = Status"Baud_Search"
  01 = Status"Baud_Control"
  10 = Status"DP_Control"
  11 = Not possible from PROFIBUS DP master
- Bits 8,9,10,11 Baud rate 3..0
  0000 = 12 mbaud
  0001 = 6 mbaud
  0010 = 3 mbaud
  0011 = 1.5 mbaud
  0100 = 500 kbaud
  0101 = 187.5 kbaud
  0110 = 93.75 kbaud
  0111 = 45.45 kbaud
  1000 = 19.2 kbaud
  1001 = 9.6 kbaud
  Rest = Not possible
- Bits 12,13, 14,15 SPC3-Release 3..0:
  0000= Release 0
  Rest = Not possible

P732.3 (094H, SPC3_Global_Controls)

Bits remain set until the next DP global command.

15	14	13	12	11	10	9	8	7	6	5	4	3	2	1	0	Bit

- Bit 0 Reserved
- Bit 1 1 = Clear_Data telegram received
- Bit 2 1 = Unfreeze telegram received
- Bit 3 1 = Freeze telegram received
- Bit 4 1 = Unsync telegram received
- Bit 5 1 = Sync telegram received
- Bits 6,7 Reserved

P732.4 (Low-Byte), 096H
Counter for telegrams received error-free (only DP standard)
Counter for received DP net telegrams

P732.5 (Low-Byte), 098H
Counter TIMEOUT
Counter is incremented if the "TIMEOUT" signal is identified.
This occurs if, for example, the bus connector is pulled out when response-monitoring has been activated (at the DP master).

P732.6 (Low-Byte), 09AH
Counter CLEAR DATA
Is incremented if the "CLEAR DATA" is identified (see also P732.3).
Occurs, for example, if the IM308B is set in "STOP".

P732.7 (Low-Byte), 09CH
Counter Heartbeat-Counter Error
Is incremented if the heartbeat-counter is not changed by the BASE-/TECH-BOARD within approx. 800 ms.

P732.8 (Low-Byte), 09EH
Number of bytes during special diagnosis
Number of bytes entered after P732.9 during special diagnosis selected by means of CB parameter 1.

732.9 (Low-Byte), 0A0H
Mirroring slot Identifier 2
Read out of the DPRAM during run up: Offset Address 054H, with VC,FC and SC, corresponds to parameter P090.

732.9 (High-Byte), 0A1H
Mirroring slot Identifier 3
Read out of the DPRAM during run up: Offset Address 055H, with VC,FC and SC, corresponds to parameter P091.

P732.10 (Low-Byte), 0A2H
Mirroring P918
Read out of the DPRAM during run up: "CB Bus address" (only Low-byte)

P732.11 (Low-Byte), 0A4H
Counter Re-configuration by CU
Re-configuration requested by BASE BOARD in online mode

732.11 (High-Byte), 0A5H
Counter Initialization
Is incremented during run through of the initialization routine

P732.12 (Low Byte), 0A6H
DPS Manager Error
Error detection in the event of a fatal DPS manager error

P732.13 (Low-Byte), 0A8H
PPO type
PPO type detected from configuration telegram

P732.13 (High-Byte), 0A9H
Reserved

P732.14, 0AAH u. 0ABH
Mirroring "DWORD-Specifier-ref"
Read out of the DPRAM during run up: updated cyclically

P732.15, 0ACH u. 0ADH
Mirroring "DWORD-Specifier-act
Read out of the DPRAM during run up: updated cyclically

732.16 (Low-Byte), 0AEH	Counter DS_WRITE acknowledgement negatively
P732.16 (High-Byte), 0AFH	Reserved
732.17 (Low-Byte), 0B0H	Counter DS_WRITE acknowledged positively
P732.17 (High-Byte), 0B1H	Reserved
732.18 (Low-Byte), 0B2H	Counter DS_READ acknowledged negatively
P732.18 (High-Byte), 0B3H	Reserved
P732.18 (High-Byte), 0B3H	reserved
P732.19 (Low-Byte), 0B4H	Counter DS_READ acknowledged positively
P732.19 (High-Byte), 0B5H	reserved
P732.20 (Low-Byte), 0B6H	Counter GET DB99 acknowledged positively
P732.20 (High-Byte), 0B7H	Counter PUT DB99 acknowledged positively
732.21 (Low-Byte), 0B8H	Counter GET DB100 acknowledged positively
P732.21 (High-Byte), 0B9H	Counter PUT DB100 acknowledged positively
732.22 (Low-Byte), 0BAH	Counter GET DB101 acknowledged positively
P732.22 (High-Byte), 0BBH	Counter PUT DB101 acknowledged positively
732.23 (Low-Byte), 0BCH	Counter DPT-Service acknowledged negatively
P732.23 (High-Byte), 0BDH	Counter Applic positively acknowledged Increment during set-up DPT service application relation
P732.24 (Low-Byte), 0BEH	reserved
P732.24 (High-Byte), 0BFH	reserved
P732.25 0C0H and 0C1H	Creation date Day and month when CBP firmware created (Display: 0304 = 03.04.)
P732.26 0C2H and 0C3H	Creation data Year when CBP firmware created (Display = Year)
P732.27 0C4H and 0C5H	Software-Version Software version V X.YZ (Display X)
P732.28 0C6H and 0C7H	Software-Version Software version V X.YZ (Display YZ)
P732.29 0C8H and 0C9H	Flash-EPROM Checksum Is read out of the flash EPROM during run-up

8.2.10.5 Additional methods of diagnosis for start-up personnel

(See section 8.2.8.7 for extended CBP2 diagnosis)

NOTE

The CB parameters, P711 to P721, have two indices. The following convention applies to this:

Index 1 is valid for the first CBP

Index 2 is valid for the second CBP

In order to determine which CBP is the first and which the second, see Section 8.2.4 "Mounting methods / CBP slots".

CB parameter 1 Telegram diagnosis

With P711 / P696 (CB parameter 1), special diagnostic entries for the CBP diagnostics buffer can be selected. If P711 / P696 is set to a value not equal to zero during parameterization of the CBP by the converter, telegram contents of the PROFIBUS-DP telegram are cyclically entered into the CBP diagnostics buffer, depending on the set value.

The entries are made in rising sequence beginning with r732.9 (r732.10, r732.11 etc.) in the same way as the corresponding useful data are transferred via the PROFIBUS-DP, namely high-byte before low-byte, high-word before low-word. The original entries (i.e. when P711 / P696 = "0") are overwritten, beginning with r732.9.

Entries r732.1 to 732.8 retain their meaning.

Detailed knowledge of PROFIBUS-DP telegrams is needed in order to evaluate these diagnostic entries.

It is only possible to set parameter P711 / P696 when the "Hardware Configuration" function is being selected (P060 or. P052).

NOTE

Parameter P711 / P696 is only to be set to a value other than zero for diagnostic purposes because continuous transfer of diagnostic information to the DPRAM reduces the data throughput rate of the CBP!

The original entries in parameter r732 / r731 are overwritten, beginning with r732.9 / r731.9.

PMU:

P711 / P696 = 0	Telegram diagnosis = Off
P711 / P696 = 1 to 26	Telegram diagnosis = ON

Telegram entries

P711 P696	= 0	No supplementary diagnosis (default setting)		
The following entries apply to cyclical data transfer via MSZY-C1				
P711 P696	= 1	PPO useful data in the CBP receive buffer	Useful-data telegram (master → converter)	Length depends on PPO type
P711 P696	= 2	PPO useful data in the CBP transmit buffer	Useful-data telegram (converter → master)	Length depends on PPO type
P711 P696	= 3	Configuration buffer	Useful-data telegram (master → converter)	Length = 25 bytes
P711 P696	= 4	Parameterization buffer	Parameterization telegram (master → converter)	Length = 10 bytes
The following entries apply to cyclical data transfer via MSAC-C1				
P711 P696	= 10	Useful data of the DS100	Data unit in DS_WRITE to DS100	Max. 32 bytes
P711 P696	= 11	Useful data of the DS100	Data unit in DS_READ to DS100	Max. 32 bytes
The following entries apply to acyclical data transfer via MSAC-C2				
P711 P696	= 21	Useful data in the DB99	Data unit in PUT to the DB99	Max. 32 bytes
P711 P696	= 22	Useful data in the DB99	Data unit in GET to DB99	Max. 32 bytes
P711 P696	= 23	Useful data in the DB100	Data unit in PUT to DB100	Max. 32 bytes
P711 P696	= 24	Useful data in the DB100	Data unit in GET to DB100	Max. 32 bytes
P711 P696	= 25	Useful data in the DB101	Data unit in PUT to DB101	Max. 32 bytes
P711 P696	= 26	Useful data in the DB101	Data unit in GET to DB101	Max. 32 bytes

Table 8.2-26 Selection of PROFIBUS-DP telegram entries

Example 1

Parameter P711 / P696 = 1
The useful data (PPO) received from the DP master via the cyclical standard channel MSCY_C1 are entered in the diagnostics buffer.

PPO type = 1
Four words, PKW part plus control word 1 (STW1) and the main setpoint (HSW), are received. The PKW part is placed, beginning with the PKE, in parameter r732.9; STW1 and also the HSW are placed from parameter r732.13 onwards (high part at the least significant address).

In the following example, a WRITE request from the DP master is shown with the value "3002" in parameter P443.

The control word is specified with $9C7E_{Hex}$ in the DP master and 2000_{Hex} is specified as the setpoint.

The values in r732 are displayed in Motorola format, i.e. high-byte and low-byte are shown inverted in relation to what is displayed in the other parameters.

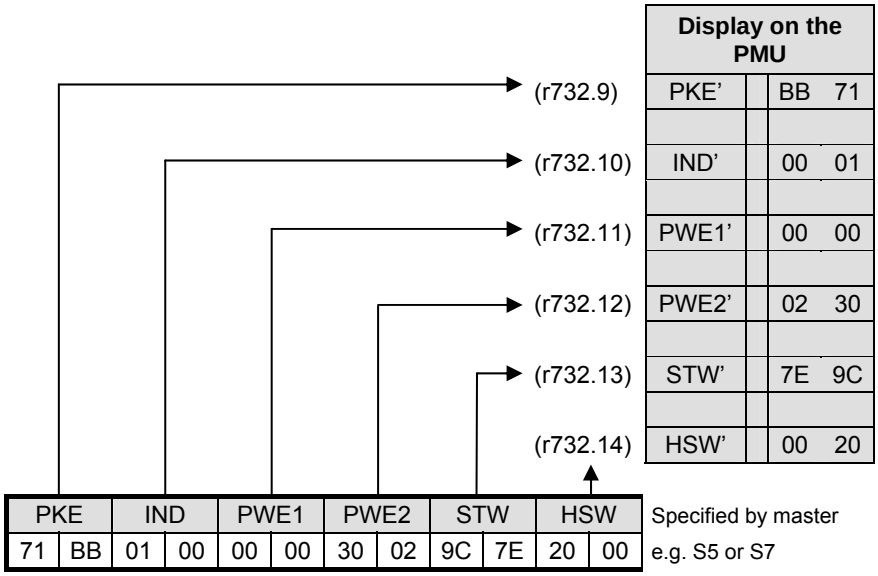

Visualization parameter r733

In order to visualize the received **process data** (PZD), parameter r733 can also be used. In parameter r733, all process data are displayed normally, i.e. in Intel format, in the same way as they are used in the MASTERDRIVES.

The PKW interface cannot be visualized by means of parameter r738 and r739.

The index ranges used in parameters r733, r738 and r739 are shown in the function diagrams in the appendix.

NOTE

In the examples and in the following tables, information with an apostrophe (e.g. PKE') means that, with these values, the high-byte and the low-byte are swapped round in relation to the original value, as for example in the programmable controller.

Example 2

Parameter P711 / P696 = 2
The useful data (PPO) sent to the DP master via the standard cyclical channel MSCY_C1 are entered into the diagnostics buffer.

PPO-type = 1
Four words are sent, PKW part plus status word 1 (ZSW1) and the main actual value (HIW). The PKW part is stored, beginning with the PKE, in parameter r732.9 and ZSW1 as well as the HIW from parameter r732.13 onwards (high part at the least significant address).

In the following example, the reply (to the DP master) to the WRITE request in example 1 is shown in parameter P443 with the value "3002".
The status word is returned by the converter with 4331_{Hex}; 0000_{Hex} is given as the actual value.

The values in r732 are displayed in Motorola format, i.e. high-byte and low-byte are shown inverted in relation to what is displayed in the other parameters.

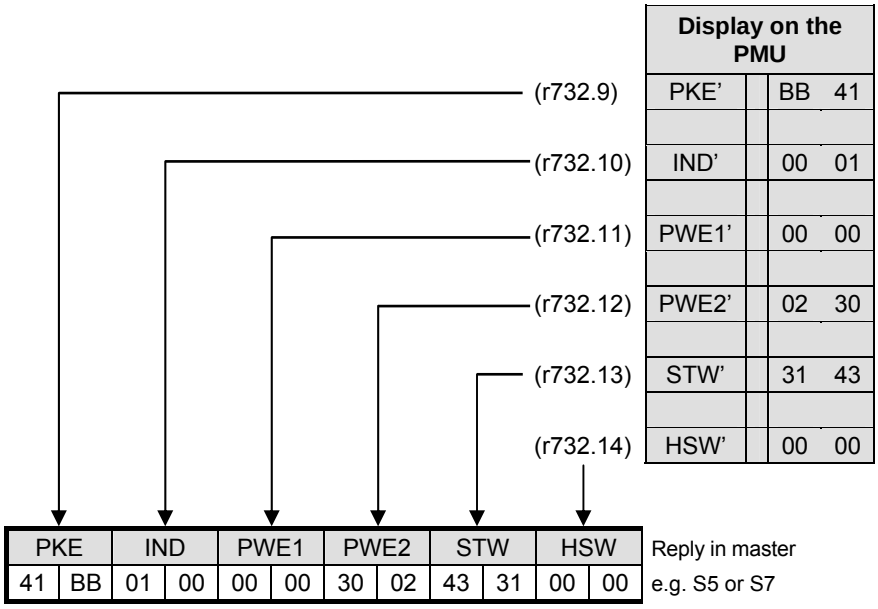

Telegram contents (communication with Master 1)

Display in r732	When P711 = 1 or 2		When P711 = 3	When P711 = 4		When P711 = 10	When P711 = 11
	PPOs 1,2, or5	PPOs 3 or 4	Different depending on PPO	Parameteriz. telegram			
ii 09	PKE'	PZD1'	00 04	Byte 2 u 1		PKE'	PKE'
ii 10	IND'	PZD2'	AD 00	Byte 4 u 3		IND'' 2)	IND'' 2)
ii 11	PWE1'	PZD3' *	04 C4	Ident-No.		PWE1'	PWE1'
ii 12	PWE2'	PZD4' *	00 00	Byte 8 u 7		PWE2'	PWE2'
ii 13	PZD1'	PZD5' *	40 BB	Byte 10 u 9		PWE3'	PWE3'
ii 14	PZD2'	PZD6' *	00 04	xxx		PWE4'	PWE4'
ii 15	PZD3' *	xxx	8F 00	xxx		PWE5'	PWE5'
ii 16	PZD4' *	xxx	C2 C0	xxx		PWE6'	PWE6'
ii 17	PZD5' *	xxx	per PPO	xxx		PWE7'	PWE7'
ii 18	PZD6' *	xxx	per PPO	xxx		PWE8'	PWE8'
ii 19	PZD7' **	xxx	per PPO	xxx		PWE9'	PWE9'
ii 20	PZD8' **	xxx	per PPO	xxx		PWE10'	PWE10'
ii 21	PZD9' **	xxx	per PPO	xxx		PWE11'	PWE11'
ii 22	PZD10' **	xxx	1)	xxx		PWE12'	PWE12'
ii 23	xxx	xxx	xxx	xxx		PWE13'	PWE13'
ii 24	xxx	xxx	xxx	xxx		PWE14'	PWE14'

1) The 25 bytes with slot-oriented S7 type identifications are always entered, even if the CBP is configured with identification bytes by an S5 or a non-Siemens master.

2) As regards IND', high-byte and low-byte are inverted in relation to the IND': this is based on a different definition of the useful data for PPOs and acyclically transferred sets of data.

* only for PPO2 and 4

** only for PPO5

Structure and content of the parameterization telegram									
Byte 1	Byte 2	Byte 3	Byte 4	Byte 5	Byte 6	Byte 7	Byte 8	Byte 9	Byte 10
DP-Status	WD_Fac 1	WD_Fac 2	TSDR - min	PNO-Ident-No.		Group-Ident	DPV1 - Status 1	DPV1 - Status 2	DPV1 - Status 3

Table 8.2-27 Telegram contents in parameter r732i09 which can be read out (communication with Master 1)

Telegram contents (communication with SIMOVIS / DriveMonitor)

Display im r732	When P711 = 21	When P711 = 22	When P711 = 23	When P711 = 24	When P711 = 25	When P711 = 26
ii 09	PZD rights	PZD rights	PKE'	PKE'	PZD1'	PZD1'
ii 10	xxx	xxx	IND''	IND''	PZD2'	PZD2'
ii 11	xxx	xxx	PWE1'	PWE1'	PZD3'	PZD3'
ii 12	xxx	xxx	PWE2'	PWE2'	PZD4'	PZD4'
ii 13	xxx	xxx	PWE3'	PWE3'	PZD5'	PZD5'
ii 14	xxx	xxx	PWE4'	PWE4'	PZD6'	PZD6'
ii 15	xxx	xxx	PWE5'	PWE5'	PZD7'	PZD7'
ii 16	xxx	xxx	PWE6'	PWE6'	PZD8'	PZD8'
ii 17	xxx	xxx	PWE7'	PWE7'	PZD9'	PZD9'
ii 18	xxx	xxx	PWE8'	PWE8'	PZD10'	PZD10'
ii 19	xxx	xxx	PWE9'	PWE9'	PZD11'	PZD11'
ii 20	xxx	xxx	PWE10'	PWE10'	PZD12'	PZD12'
ii 21	xxx	xxx	PWE11'	PWE11'	PZD13'	PZD13'
ii 22	xxx	xxx	PWE12'	PWE12'	PZD14'	PZD14'
ii 23	xxx	xxx	PWE13'	PWE13'	PZD15'	PZD15'
ii 24	xxx	xxx	PWE14'	PWE14'	PZD16'	PZD16'

Table 8.2-28 Telegram contents in parameter r732i09 which can be read out (communication with SIMOVIS/DriveMonitor)

CB parameter 3 (DPRAM monitor)

By means of CB parameter 3, i.e. P713 / P698, a hex monitor can be activated with which addresses of the dual-port RAM can be read out on the CBP.

DANGER

Parameter P713 / P698 is to be reserved exclusively for suitably trained start-up personnel.

In order to use the hex monitor to best effect, appropriate detailed knowledge of the structure of the dual-port RAM is necessary.
In P713 / P698, only the offset address (decimal) is entered.

If CB Parameter 3 is set to a value other than "0", 12 bytes are cyclically entered in diagnostic parameter r732 from r732.9 onwards. This is done from the absolute address set in CB parameter 3 (decimal) onwards.
CB Parameter 3 has the highest priority and disables entries by CB parameter 1.

Diagnosis with PROFIBUS Class II Master

A Class II master (normally a PG programming unit) can be used for start-up and diagnosis. During start-up/testing, the Class II master assumes the function of the Class I master for the selected station. The exchange of useful data with the slave, however, is not cyclical.

8.2.10.6 CBP2 diagnostic parameters

Meaning of standard diagnosis with P711.x = 0

Parameter No.	Content (high byte)	Content (low byte)
r732.1	CBP2 status (same content as CBP)	
r732.2	DPC31 status (same content as CBP, SPC3 status)	
r732.3	Global control (same content as CBP)	
r732.4	Counter: CLEAR DATA (alteration if, e.g. SIMATIC in "Stop")	Counter: fault-free cyclical telegrams
r732.5	Counter: Heartbeat counter fault from basic unit	Counter: Watchdog state changed (alteration during plugging/unplugging of connector or C1 master is coming/going)
r732.6	Mirroring: Slot identifier 3	Mirroring: Slot identifier 2
r732.7	PNO identification (0x8045)	
r732.8	Number of valid bytes in r732.9 to r732.24 when P711.x > 0 (special diagnosis) or: fault number DP slave software for alarm A087	
	r732.9 to r732.24 have a different meaning in the case of special CB diagnosis with P711.x > 0	
r732.9	Cross traffic: address encoder 1	Encoder 2
r732.10	Encoder 3	Encoder 4
r732.11	Encoder 5	Encoder 6
r732.12	Encoder 7	Cross traffic: address encoder 8
r732.13	CBP2 itself works as a cross-traffic encoder	PPO type (0xFF: no PPO)
r732.14	Cross traffic: number of configured encoders	Cross traffic: Score Board, one bit per encoder (Bit 0 = Encoder 1, ... Bit 7=Encoder 8) 0: Encoder inactive 1: Encoder configured and active
r732.15	Counter: repeated cyclical PKW request	Counter: new cyclical PKW task
r732.16	Counter: C1 DS100 Write/Read negative	Counter: C1 DS100 Write/Read positive
r732.17	Counter: DriveES Write/Read negative	Counter: DriveES Write/Read positive
r732.18	Counter: DriveES Control negative	Counter: DriveES Control positive
r732.19	Counter: DriveES Setpoints negative	Counter: DriveES Setpoints positive
r732.20	Counter: S7 Protocol negative	Counter: S7 Protocol positive
r732.21	Counter: Abort C2 master	Counter: Initiate C2 master
r732.22	S7 protocol access fault: For fault number, see following table	
r732.23	S7 protocol access fault: Data block number or parameter number	
r732.24	S7 protocol access fault: Data block offset or index word	
r732.25	Generating date: Day	Generating date: Month
r732.26	Generating date: Year	
r732.27	Software version	
r732.28	Software version	
r732.29	Software version: Flash-EPROM checksum	

Fault S7 protocol (r732.22), fault numbers < 150 correspond to PKW fault numbers:

No.	Cause	Remedy (e.g. in ProTool)
	No. 0 .. 199: S7 task has been changed into a parameter task. Fault detection in the BASE/TECH BOARD. Additional info in r732.23, r732.24: parameter number, index word.	
0	There is no parameter number	Check data block number
1	Parameter value cannot be altered	-
2	Top or bottom limit exceeded	-
3	There is no subindex	Check data block offset
4	Access to single value with array identifier	Set data block offset = 0
5	Access to word with double word task or vice versa	Use correct type of data (e.g. INT for word, DINT for double word)
6	Setting not allowed (can only be reset)	-
7	Description element cannot be altered	(should not occur here)
11	No parameter change rights	-
12	Keyword missing	-
15	There is no text array	-
17	Task cannot be executed due to operating status	-
101	Parameter number deactivated at the moment	-
102	Channel width too small	(should not occur here)
103	PKW number incorrect	(should not occur here)
104	Parameter value not permissible	-
105	Access to array parameter with single identifier	Set data block offset > 0
106	Task not implemented	-
	No. 200-209: S7 task is formally defective. Error detection in the COM BOARD. Additional info in r732.23, r732.24: data block number, data block offset	
200	Error in variables address (no addiional info)	Permissible: range of "Data block"
201	Data block number not permissible	Permissible: 1...31999
202	Data block offset not permissible	Permissible: 0...116, 10001...10116, 20000...20010
203	Non-permissible "Type" during access to parameter value	Permissible: CHAR. BYTE, INT, WORD, DINT, DWORD, REAL
204	Non-permissible "Number of elements" during access to parameter value	Permissible: effective 2 or 4 byte
205	Non-permissible "Type" during access to text	Permissible: CHAR, BYTE
206	Non-permissible "Type" during access to description	Permissible: CHAR. BYTE, INT, WORD, DINT, DWORD, REAL
207	Non-permissible odd "Number of elements" in the case of type CHAR or BYTE	Correct the "Number of elements"
208	Non-permissible change of text/description	-
209	Inconsistency in the write task: "Type" and "Number of elements" does not match "Type of data" and "Length of data"	(Defective communications partner)

No.	Cause	Remedy (e.g. in ProTool)
	No. 220: S7 task has been changed into a parameter task. Reply from BASE/TECH BOARD is defective. Error detection in the COM BOARD. Additional info in r732.23, r732.24: data block number, data block offset.	
220	Parameter reply does not match task	(Defective BASE/TECH BOARD)
	No. 240: Fault detection in the COM BOARD; without additional info	
240	Reply too long for reply telegram	(Defective communications partner)

Diagnosis of clock synchronization with "SIMOLINK" diagnostic parameter r748 (MASTERDRIVES MC only):

r748.x	(Content of SIMOLINK SLB)	Content of PROFIBUS CBP2
r748.1	Number of error-free synchronizing telegrams	
r748.2	CRC error	Internal
r748.3	Number of timeout errors	Internal
r748.4	Last bus address signaled	Internal
r748.5	Address of the node which sends the special telegram "Timeout"	Internal
r748.6	Active SYNC-interrupt delay	Internal
r748.7	Position of the node in the ring	Internal (deviation of pulse period, configured on CU and set via PROFIBUS)
r748.8	Number of nodes in the ring	Maximum permissible deviation of the pulse period
r748.9	Synchronism deviation (65535: Synchronization not active) should fluctuate between 65515 and 20	
r748.10	Corrected pulse period in units of 100 ns	
r748.11	T0 counter (0 if synchronization active)	Internal
r748.12	Internal	Internal
r748.13	Internal	Internal
r748.14	Timer	Internal
r748.15	Bus cycle time implemented	
r748.16	Internal	Internal

8.2.10.7 Special CBP2 diagnosis for start-up personnel

Special diagnosis with P711.x > 0

Image of the C1 master telegrams

P711.x	Display in r732.9..24 (32 bytes)	
1	Output: PKW and setpoints from the master	Maximum 32 bytes
2	Input: PKW and actual values to the master	Maximum 32 bytes
3	Configuring telegram from the master End identifier: 0x5A, 0xA5	Byte 0 – 31
50		Byte 32 - 63
51		Byte 64 - 95
52		Byte 96 - 127
53		Byte 128 - 159
54		Byte 160 - 191
55		Byte 192 - 223
56		Byte 224 - 244
4	Parameterizing telegram from the master End identifier: 0x5A, 0xA5	Byte 0 – 31
60		Byte 32 - 63
61		Byte 64 - 95
62		Byte 96 – 127
63		Byte 128 – 159
64		Byte 160 – 191
65		Byte 192 – 223
66		Byte 224 – 244

Diagnosis of configuration and parameterization

P711.x	r732.x	
30	r732.9	Result of parameterizing telegram evaluation (see table)
	r732.10	Result of evaluating cross-traffic parameterization (see table)
	r732.11	Result of configuring telegram evaluation (see table)
	r732.12	PPO type 1-5; if free configuration, then 0xff
	r732.13	Length of the input data to the master (without PKW) in bytes
	r732.14	Length of the output data from the master (without PKW) in bytes
	r732.15	Double-word specifier setpoints
	r732.16	Double-word specifier actual values
	r732.17	Free memory in the multi-port RAM of the DPC31 in bytes

The value output in parameter P732.9 (P711.x = 30) arises due to bit-by-bit OR linking of the following parameters. In the case of errors in the block for cross-traffic parameterization, the detailed fault codes are to be entered in parameter P732.10. Only if P732.10 contains the value 0 can the clear causes of the fault be read out of P732.9. If P732.10 <> 0, the content of P732.9 is falsified and the errors leading to abort cannot be clearly determined!

Value	Meaning
0x0000	Parameterizing telegram is error free
0x0001	Unknown master, length of para. telegram <10 and <>7
0x0002	Unknown para. block. The following are supported: 0xE1 – Equidistance, 0xE2 – Cross traffic
0x0004	It was not possible to fully identify the para. telegram
0x0008	It was not possible to set up the parameter buffer in the DPC31. (Memory size insufficient!)
0x0010	The block for equidistance parameterization has an incorrect length (24 + 4 = 28 bytes)
0x0020	The CU has not opened the RCC channel (no CU SW-version with equidistance capability) or cannot process the RCC channel
0x0040	Non-permissible parameter (e.g. bus cycle time and pulse frequency do not correlate)
0x0080	Tbase-dp is larger than 16 bits after de-normalization
0x0100	Tdp is larger than 16 bits
0x0200	Tdx is larger than Tdp
0x0400	The free computing time is not sufficient. (Tdp-Tdx is too small)
0x0800	The para. telegram contains an invalid value for Isochronous Mode Supported (permissible values 0, 0xE1)
0x1000	Unknown equidistance mode set by the BASEBOARD

Table 8.2-29 Paramter-telegram evaluation r732.9 / P711 = 30

Value	Meaning
0x0000	Parameterizing block cross-traffic error-free
0x1001	Default return value
0x1002	The version of the filter table is not supported. Identifier 0xE2 is supported.
0x1004	The data area of the CBP2 (16 word PZD) is exceeded.
0x1008	The pick-off has an odd number of bytes. Only word-by-word pick-offs are permitted.
0x1010	The maximum number of pick-offs has been exceeded. (A maximum of 8 pick-offs are allowed, including pick-off of own data)
0x1020	No links have been configured in the cross-traffic parameterizing block
0x1040	A pick-off does not indicate the beginning of a process data word
0x1080	The permissible telegram length which is to be read has been exceeded (maximum 244 bytes).
0x1100	The reserved memory area in the multi-Port RAM has been exceeded.
0x1200	Non-permissible publisher address 1-125
0x1400	Several links to a publisher are not permissible.

Table 8.2-30 Parameter-telegram evaluation, cross-traffic, r732.10 / P711 = 30

Diagnosis of the setpoint source (especially during cross traffic)

P711.x	r732.x	Content	High byte	Low byte
31	r732.9	Setpoint source: 0: Master 1 to 8: cross-traffic encoder 9: -	Setpoint 2	Setpoint 1
	P732.10		Setpoint 4	Setpoint 3
	P732.11		Setpoint 6	Setpoint 5
	P732.12		Setpoint 8	Setpoint 7
	P732.13		Setpoint 10	Setpoint 9
	P732.14		Setpoint 12	Setpoint 11
	P732.15		Setpoint 14	Setpoint 13
	P732.16		Setpoint 16	Setpoint 15
	P732.17	Byte offset of the setpoint within the setpoint source (value range 0 to 30)	Setpoint 2	Setpoint 1
	P732.18		Setpoint 4	Setpoint 3
	P732.19		Setpoint 6	Setpoint 5
	P732.20		Setpoint 8	Setpoint 7
	P732.21		Setpoint 10	Setpoint 9
	P732.22		Setpoint 12	Setpoint 11
	P732.23		Setpoint 14	Setpoint 13
	P732.24		Setpoint 16	Setpoint 15

Diagnosis of clock synchronization

P711.x	r732.x	Content
32	r732.9	Interrupt enable by BASEBOARD
	r732.10	RCC parameter 1
	r732.11	RCC parameter 2
	r732.12	Synchronization mode from the BASEBOARD

8.2.11 Appendix

Technical data

Order number	CBP: 6SE7090-0XX84-0FF0 CBP2: 6SE7090-0XX84-0FF5
Size (length x width)	90 mm x 83 mm
Degree of pollution	Degree of pollution 2 acc. to IEC 664-1 (DIN VDE 0110/T1), Moisture condensation during operation is not permissible
Mechanical strength In stationary use • displacement • acceleration During transport • displacement • acceleration	To DIN IEC 68-2-6 (if board is correctly mounted) 0.15 mm in the frequency range 10 Hz to 58 Hz 19.6 m/s^2 in the frequency range > 58 Hz to 500 Hz 3.5 mm in the frequency range 5 Hz to 9 Hz 9.8 m/s^2 in the frequency range > 9 Hz to 500 Hz
Climatic class	Class 3K3 to DIN IEC 721-3-3 (during operation)
Method of cooling	Natural air cooling
Permissible ambient or coolant temperature • during operation • during storage • during transport	 0° C to +70° C (32° F to 158° F) -25° C to +70° C (-13° F to 158° F) -25° C to +70° C (-13° F to 158° F)
Permissible moisture stress	Relative humidity ≤ 95 % during transport and storage ≤ 85 % during operation (condensation not permissible)
Supply voltage	5 V ± 5 %, max. 600 mA, internally from the basic unit
Output voltage	5 V ± 10 %, max. 100 mA, electrically isolated supply (X448/Pin 6) • for bus termination of the serial interface or • for supplying an OLP (Optical Link Plug)
Data transfer rate	max. 12 MBaud

Table 8.2-31 Technical data

Block diagram of the CBP

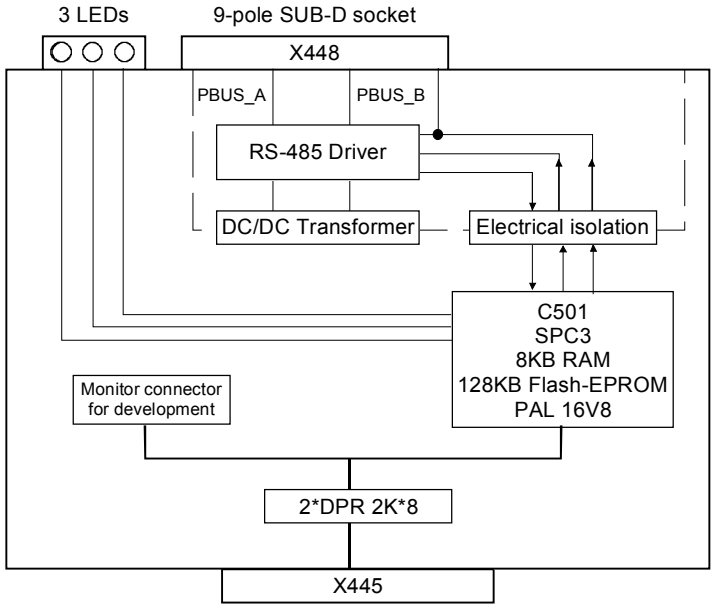

Fig. 8.2-40 Block diagram of the CBP

8.3 SIMOLINK

8.3.1 General principles

Definition

SIMOLINK (**Si**emens **Mo**tion **Link**) is a digital, serial data transfer protocol with a fiber-optic cable as its transfer medium. The SIMOLINK drive link has been developed for extremely fast and strictly cyclical transfer of process data (control information, setpoints, actual values and status information) between individual MASTERDRIVES MC/VC units or between MASTERDRIVES MC/VC units and a higher-level control system with synchronization of all connected nodes to a common system clock.

Application

SIMOLINK enables highly dynamic and accurate synchronism of all connected MASTERDRIVES MC units to be realized on account of its extremely fast data transfer by transmitting a strictly time-equidistant and jitter-free SYNC telegram in each cycle. Typical areas of use are, for example, all applications requiring a high degree of synchronism (angular synchronism) of individual MASTERDRIVES MC units to each other. A typical area of application is, for example, the replacement of previously mechanically coupled moving axes by individual electric drives, e.g. for printing machines. SIMOLINK can further be used in highly dynamic coordination tasks of individual MASTERDRIVES MC/VC units, such as in the motion control of individual axes on packing machines.

Components

SIMOLINK consists of the following components:

- SIMOLINK master
  Interface for higher-level automation systems,
  e.g. SIMATIC FM458 or SIMADYN (see Chapter 8.3.8)
- SIMOLINK board (SLB)
  Interface for drives (see Chapter 8.3.4)
- SIMOLINK switch (see following section)
- Fiber-optic cable
  Connecting medium of nodes on the SIMOLINK ring (see Chapter 8.3.4)

The SIMOLINK master and the SIMOLINK board are active nodes on SIMOLINK. The SIMOLINK switch is a passive node.

- Active nodes can receive and send telegrams and can read or write the contained information.
- Passive nodes can only pass on received telegrams. It is not possible for them to process the information contained therein.

SIMOLINK switch

The SIMOLINK switch is a passive node which has a "switching" function between two SIMOLINK rings.

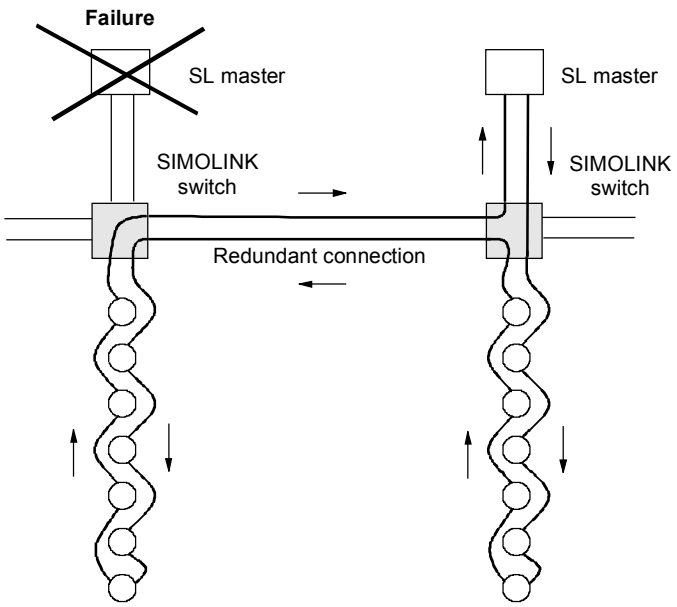

Fig. 8.3-1 Example of an application for the SIMOLINK switch

SIMOLINK features

- The transfer medium is a fiber-optic cable. Either glass or plastic fiber-optic cables can be used.
- SIMOLINK has the structure of a ring of fiber-optic cables where each node acts as a signal amplifier.
- Thus, the following distances can be realized, depending on the selected medium:
  - max. 40 m between each node on a plastic fiber-optic cable or
  - max. 300 m between each node on a glass-fiber-optic cable.
- Up to 201 active nodes [1] can be interlinked on SIMOLINK.

[1] From now on, the active nodes are only referred to in the text as nodes

- MASTERDRIVES MC only:
  Synchronization of the nodes is effected through a SYNC telegram which is generated by a node with a special function, the dispatcher function, and is received simultaneously by all other nodes. The SYNC telegram is generated absolutely time-equidistantly and jitter-free. The time between two SYNC telegrams is the bus cycle time of SIMOLINK and, at the same time, it corresponds to the common clock time for synchronization of all connected nodes.
- Data transfer between nodes is effected strictly cyclically in the bus cycle clock time. This means that all data written or read by the nodes is transferred between two SYNC telegrams. Upon receipt of the SYNC telegram, the previously received data in every MASTERDRIVES MC/VC unit is passed on to the control system of the converter as being the currently applicable data. This ensures that the latest applicable data is available to all nodes on the bus at the same time.

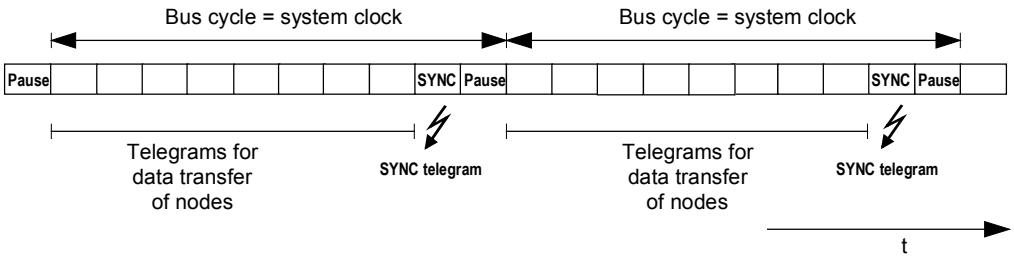

Fig. 8.3-2 SIMOLINK telegram traffic

- The transfer rate is a fixed 11 MBit/s
- A 32 bit word can be transferred in each telegram. The total length of each telegram is 70 bit, including the 32 bit net information. Thus, at a transfer rate of 11 Mbit/sec, a telegram has a transfer time of $6.\overline{36}\,\mu s$.
- SIMOLINK has a very high data throughput. This means that all the telegrams are sent without an interval directly one after the other. For example, with a selected bus cycle time of 1 ms, 155 telegrams with data contents (value of 32 bit per telegram) can be transferred via SIMOLINK.
- The functionality of the SIMOLINK application defines the assignment of telegrams to nodes. There are two possible applications:
  - the peer-to-peer functionality and
  - the master/slave functionality.

Peer-to-peer functionality

This field of application describes all applications for which there is no dedicated logical master for distributing information via SIMOLINK. A typical application example here today is the "Continuous material throughput" which is implemented with the peer-to-peer protocol, in which drives have equal rights in a logical sense (peer-to-peer) in their exchange of information with each other. In accordance with the definition of the term "peer-to-peer", (communication between equals), this function is described as the "Peer-to-peer" functionality on SIMOLINK. This functionality enables extremely fast, synchronized and absolutely freely selectable transfer of data (no restrictions imposed by the physical bus configuration as in the peer-to-peer protocol) between MASTERDRIVES MC/VC units. The system needs to be designed with a "timing generator" for generating the telegram traffic and which keeps the bus system fully functional. The SIMOLINK dispatcher provides the interface to this function in the converter. The term "Dispatcher" is used to describe the principle characteristic of this interface: independent, constant dispatching of telegrams. The interfaces in the other MASTERDRIVES MC/VC units on SIMOLINK operate as "Transceivers".

The term "Transceiver" is made up of the words "Transmitter" and "Receiver". It means that a transceiver can receive and then send telegrams, but it cannot initiate telegram traffic itself (main difference to the dispatcher).

Master/slave functionality

In this case, a central station (logical master) supplies all the other nodes (logical slaves) on the bus system with information (control bits, setpoints, etc.) This function is referred to hereafter as the "Master/slave" functionality. It refers to the logics of data transfer between the nodes on SIMOLINK. The system needs to be configured with a SIMOLINK interface in the central station (master) in this application field. This interface is both the logical master for data transfer and the initiator and monitor for telegram traffic on SIMOLINK (= dispatcher function). This interface, including its functions contained in an automation system, is referred to as the "SIMOLINK master".

The interfaces in the other nodes, e.g. in the converters, are "SIMOLINK transceivers".

NOTE

There is always only one node with a dispatcher function in the SIMOLINK ring. This is either a SIMOLINK board with dispatcher parameterization or a SIMOLINK master.

8.3.2 Peer-to-peer functionality

Each node on SIMOLINK has an active function either as a transceiver or as a dispatcher. There is always only one node with a dispatcher function in the SIMOLINK ring. All the other nodes are transceivers.

Bus topology

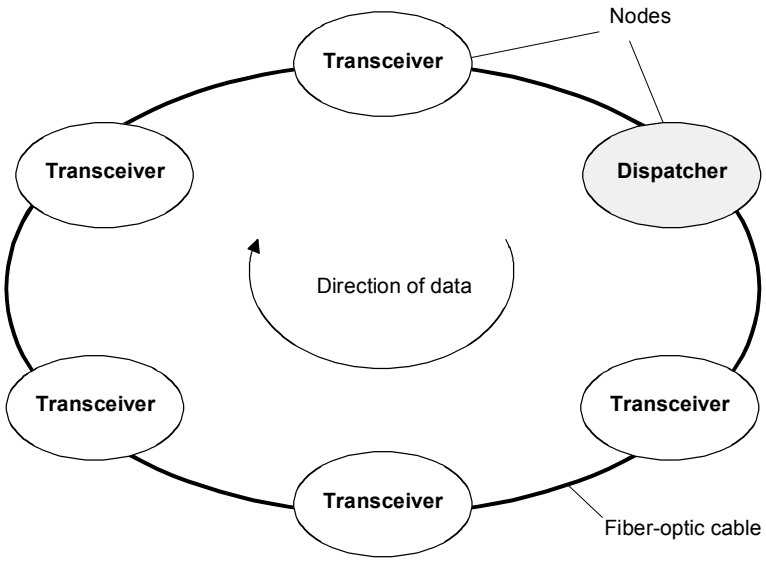

Fig. 8.3-3 SIMOLINK with dispatcher

Dispatcher

A table (= task table) is defined in the SIMOLINK dispatcher in which all telegrams are entered in the order in which they are sent. Each telegram has an address section (= node address) and a subaddress section (= channel number) in the telegram header. The telegrams are entered in the task table with ascending address and subaddress sections. The SIMOLINK dispatcher initiates telegram traffic by dispatching all the telegrams one after the other, beginning with the telegram with the lowest address and subaddress section according to the entry in the task table. As soon as the SIMOLINK dispatcher has dispatched all the telegrams, it sends a synchronization telegram (SYNC telegram) and a pause telegram. After this, it dispatches the first telegram from the task table again without any delay.

NOTE

The dispatcher can upread or overwrite the data contents of telegrams, as can every transceiver.

Transceiver

Each transceiver receives the telegrams (all of them) initiated by the dispatcher and can upread their data contents (value of 32 bit per telegram) or overwrite them with their own data, in accordance with a determined rule. The received telegrams are passed on to the next node in the ring, irrespective of whether the data contents have been read, overwritten or revised. Nodes with a transceiver function cannot maintain data traffic in the ring on their own.

8.3.3 Application with peer-to-peer functionality

Principle

The peer-to-peer functionality with SIMOLINK corresponds in principle to the peer-to-peer link with which you may already be familiar from MASTERDRIVES and SIMOREG, i.e. exchange of process data between MASTERDRIVES MC/VC units with the following additional advantages:

- Very fast (11 Mbit/s; one hundred and fify 32-bit data in 1 ms)
- Freely selectable, i.e. every MASTERDRIVES MC/VC can send process data to every other MASTERDRIVES MC/VC, or receive data from it.
- Maximum of sixteen 32-bit data per MASTERDRIVES MC/VC possible via SIMOLINK; i.e. every MASTERDRIVES MC/VC can receive up to 8 32-bit data via SIMOLINK, and send up to 8 32-bit data to other MASTERDRIVES MC/VC units.

Basic principle of addressing

The telegram address is not interpreted as a "destination address" (which determines to whom the information is to be sent), but is understood to be a "source address". This indicates where the information is coming from.

Dispatchers and transceivers write their information (= data) in the telegrams assigned to them (node address = address in telegram) on the bus. Dispatchers and transceivers can read every telegram on the bus. For this purpose, the nodes have separate storage areas for receive data and transmit data.

Addressing mechanism - writing

The dispatcher and transceiver nodes only transmit information (= write data) in the telegrams which are assigned to them via the address. A maximum of 8 x 32-bit data can be transferred in 8 telegrams (same address and channel number from 0 to 7). A channel number is assigned to each 32-bit value and thus clearly also a telegram on the bus.

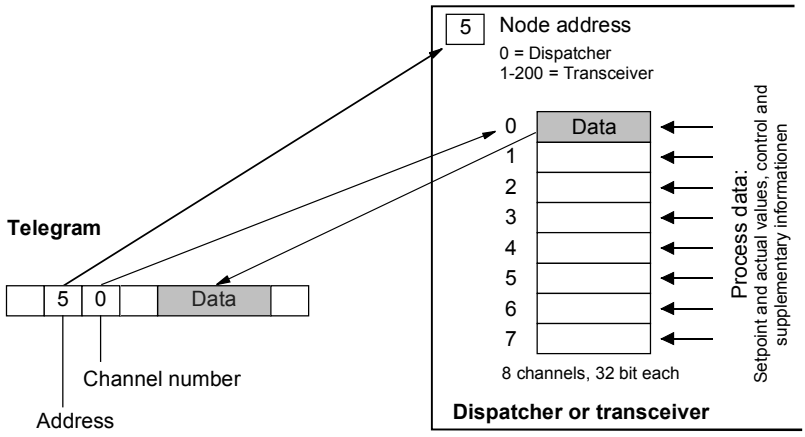

Fig. 8.3-4 Writing data

Addressing mechanism - reading

The active nodes (dispatcher and transceivers) can read the data of any telegram on the bus (also their own telegrams; separate storage areas for transmit data and receive data). A maximum of 8 different telegrams (8 x 32-bit data) can be read. For this purpose, **those** addresses and channel numbers whose data are to be read are parameterized as receive telegrams in the dispatcher or in the transceivers. This parameterization is carried out before data traffic is started up; in the case of MASTERDRIVES, for example, via the parameters of the converter.

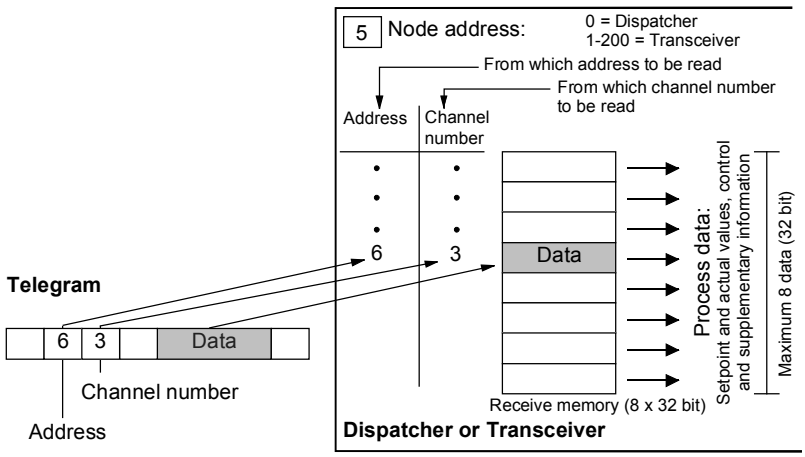

Fig. 8.3-5 Reading data

Example

The node with the address 5 (= transceiver interface) can "deposit" a maximum of 8 x 32 bit data on the bus. This means that the transceiver writes its data (32 bit in each case) in telegrams with address 5 and channel numbers 0 to 7. All the active nodes on SIMOLINK (the dispatcher as well as the transceivers) can decide whether they want to read this data. If, for example, a node wants to read the data of node 5 (= address 5) with channel number 2, this has to be configured accordingly. In this case, the address 5 and the channel number 2 have to be configured as the "Reading address".

Data transfer

In the "Peer-to-peer" application with the dispatcher, only process data (control and status words, setpoints and actual values) are transferred. When using a data area in the telegram, in the case of process data with word size (= 16 bit), two process data per telegram can also be transferred or read.

NOTE

All usable telegrams must be entered in the task table of the dispatcher.

Applications

Typical applications for SIMOLINK are the implementation of digital setpoint cascades in which one or more setpoints can be given to the slave drives by a MASTERDRIVES MC/VC unit acting as master drive.

8.3.4 Components of the peer-to-peer functionality

SLB optional board

The SLB optional board (*SIMOLINK board*) is used for linking drives to SIMOLINK.

Each SLB optional board is a node on SIMOLINK.

The optional board is provided with three LED displays which supply information on the current operating status.

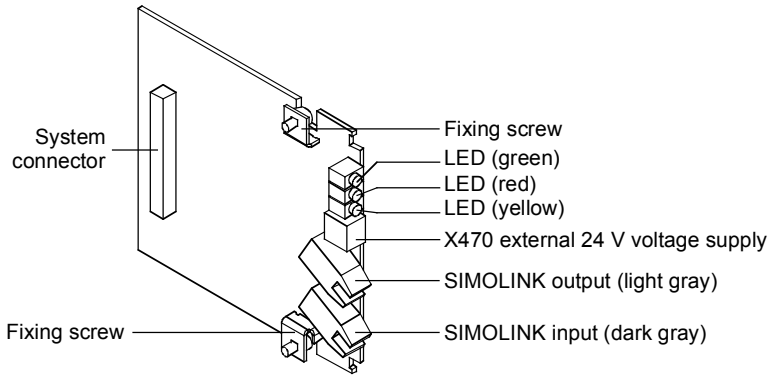

Fig. 8.3-6 SLB optional board (SIMOLINK board)

The SLB optional board links the converters/inverters to SIMOLINK. It can be used as the SIMOLINK dispatcher or as a SIMOLINK transceiver. The functionality is determined by parameterization.

Fiber-optic cable medium

A fiber-optic cable is used as the transfer medium in SIMOLINK. Plastic or glass-fiber optic cables can be used.

For cable lengths (the distance between two nodes) up to a maximum of 40 m, plastic cables are used.

NOTE

Recommendation:
Plastic fiber-optic cables from Siemens; CA-1V2YP980/1000,200A

For cable lengths (distance between two nodes) up to max. 300 m, fiber-optic cables with a glass core and a plastic sheath can be used.

NOTE

Recommendation:
Fiber-optic cables with glass core from Siemens; CLY-1V01S200/230,10A

The above-mentioned fiber-optic cables do not have an outer sheath. When using them for wiring outside switch cabinets, the cables must either be laid in cable ducts or conduits or suitable cables with an outer sheath must be used. On cables with an additional outer sheath, this must be removed before fixing the connector at the end of the cable as the connectors cannot accommodate the sheath. Therefore, when selecting the cable, one must make sure that the then remaining outer fiber diameter of 2.2 mm for attaching the connector is maintained.

24 V voltage supply

The SLB optional board has a 24 V voltage input for the external voltage supply of the board. This ensures that data transfer is maintained in SIMOLINK even with powered-down converter/inverter.

Changeover between internal voltage supply from the converter/inverter and external voltage supply is carried out automatically, with priority being given to the external voltage supply.

NOTICE

A changeover must not be performed during bus operation because it generates a reset signal on the option board as a result of which bus operation is interfered with.

8.3.5 Parameterization of the peer-to-peer functionality

The data traffic is determined by the parameterization of the dispatcher and the transceivers.

The configuration for enabling process data to be sent from a MASTERDRIVES MC/VC unit is determined by the BICO technique. The BICO technique is also used to determine the position in the control system at which the received process data are to act.

NOTE

Setting is carried out exclusively by means of the parameters of the MASTERDRIVES MC/VC unit. No additional configuration tool is required.

Parameterization of the SLB is carried out via the PMU, the OP1S or a PC with the SIMOVIS/DriveMonitor start-up tool.

The following parameterizations are necessary for configuring the SLB:

- **P740: SLB node address**
  0: simultaneous selection of dispatcher function
  1 - 200: simultaneous selection of transceiver function
- **P741: SLB telegram failure time** (dispatcher and transceiver)
  The telegram failure time is a parameterizable failure time which is stored in every node. The telegram failure time determines the maximum time between two HW interrupts. The HW interrupt is generated by the interface after receipt of a SYNC telegram.
  If a node does not receive a SYNC telegram within this time (→ no HW interrupt), the "TlgOFF" diagnostic bit is set in every node in which the telegram failure time is running.
  The telegram failure time is activated after receipt of the first SYNC telegram.
  The telegram failure time should be at least twice as long as the SIMOLINK cycle time.
  If you use the SIMOLINK, telegram failure monitoring should be activated! P741 = 4 x P746 (SLB bus cycle time) is recommended for the SLB telegram failure time. See also the function diagram [140].

- **P742: SLB transmit power** (dispatcher and transceiver)
  The power of the fiber-optic transmit block for every node can be set by a parameter.
  The transmit power can be set in the stages 3 = 40 m, 2 = 25 m and 1 = 15 m cable length. This scaling means, for example, that in stage "2" a transmit power is set for bridging a distance of up to 25 m plastic fiber-optic cable.
  - Localization of fault sources in the medium upon start-up:
    Hidden fault sources on the transfer medium which may not be possible to detect with full power strength can be better localized by reducing the transmit power. Possible causes of the faults may, for example, be that the bending radii are too small or that the contacts of the fiber-optic cable fibers in the connector are poor.
  - Ageing of the fiber-optic cable components:
    By reducing the transmit power, the ageing process of the fiber-optic cable components can be slowed down.
- **P743: Number of nodes** (dispatcher and transceivers)
  With this function, each node can compensate for its individual time delay t_{delay} for compensation of runtime delays caused by the signal conversion in each node.
  Formula for transceivers at the n-th position in the ring:

  $$t_{delay,n} = [\text{number of nodes} - n\ ] \times 3 \text{ bit times};$$

  The "Number of nodes" value is specified to the nodes as a parameter.

NOTE

The position n at which the node is situated in the ring is calculated automatically in the SIMOLINK starting cycle.

The SL master or dispatcher sends a special telegram with the address 253 "Count nodes" and the starting value 1. Each transceiver which receives this telegram remembers this number (= Count number) and then increments the data contents by the value 1. In this way, the node has the count number 1 directly after the SL master or dispatcher while the SL master or dispatcher has the maximum count number, which also corresponds to the number of node. The result of this procedure can be checked in parameters r748 Index 7 (position of the node in the ring) and r748 Index 8 (number of nodes in the ring).

NOTE

The formula stated above neglects the throughput delay of the SIMOLINK switch. Generally, this is permissible as the switch, for example, is usually situated at the beginning of the ring and thus does not cause any delay between transceivers.

The transceiver n waits $t_{delay,n}$ before it can give an HW interrupt to the unit application after receipt of the SYNC telegram. This ensures that the interrupts to the unit applications of all nodes are effected as synchronously as possible.

Normally, this parameter does not have to be altered. The dispatcher passes on the determined number of nodes to the slaves automatically. The latter deduce the necessary delay time from this if the parameter has been set to 0 (= automatic calculation). Only in the case of high accuracy requirements and special influences (SIMOLINK switch, long leads) might it be necessary to manually alter this parameter.

The calculated delay time $t_{VZ,n}$ (normalized to 3 bit times) can be checked in parameter r748 Index 6.

- **P744: SLB selection** (dispatcher and transceiver)
  Only MASTERDRIVES MC: Is for selecting source of synchronization and data when there are two SIMOLINK boards or CBPs in a MASTERDRIVES unit.
- **P745: SLB channel number** (dispatcher)
  This parameter is used to set the number of used channels (max. 8). The selected value is firmly applicable for all nodes on the bus.
- **P746: SLB cycle time** (dispatcher)
  This is used to set the bus cycle time. The bus cycle time can be set from 0.20 ms to 6.50 ms in a 10 µs grid.

NOTE

The dispatcher determines the task table from the SLB channel number and the SLB cycle time (consecutive numbering, starting with node address 0 and channel number 0, at first incrementing the channel number) in accordance with the following formula:

$$n = \left(\frac{P746 + 3.18\ \mu s}{6.36\ \mu s} - 2 \right) \times \frac{1}{P745}$$

n: Number of addressable nodes (checked at r748 Index 4)

Task table example:

P746 = 0.20 ms; P745 = 2; $\rightarrow$ n = 15

Address	0	0	1	1	2	2	3	3	4	4	5	5	6	6	7	7	8	8
Channel	0	1	0	1	0	1	0	1	0	1	0	1	0	1	0	1	0	1

Address	9	9	10	10	11	11	12	12	13	13	14	14	255	255
Channel	0	1	0	1	0	1	0	1	0	1	0	1	0	0

Only those addresses and channels listed in the task table are processed.

- **P 749: SLB read address** (dispatcher and transceiver)
  Is for setting the channels to be read. Input is in the notation address.channel. Up to 8 channels can be defined by the 8 parameter indices. The data in these channels are transferred via connectors K7001 - K7016 or KK7031-KK7045.

- **P 751: Source SLB transmit data**
  Used to select the connectors to be transmitted via SLB channels 1 to 8 (subdivided into low-word and high-word). Double connectors must be entered in two consecutive indices, so that they are transmitted with the full resolution.
- **P 755: SIMOLINK configuration (dispatcher)**
  When data are transferred from one slave to another, the problem arises that the dead time on the bus depends on the node address of the transceiver. Specifically, this means that data transfer from slave 2 to slave 1 via the dispatcher takes one cycle time longer than data transfer between slave 1 and slave 2. The reason for this is that the data are collected by the dispatcher and are not transmitted onward until the next cycle. This problem can be eliminated by addressing each transceiver twice in one SLB cycle, a first time to obtain the current data of the transceiver which are then available in the dispatcher, and a second time to transmit that data onward, although the number of addressable nodes are thereby reduced by half.
  Parameter values (only dispatcher):
  - xxx0: No dead time compensation
  - xxx1: Dead time compensation activated → Number of addressable nodes = n / 2

  When 2 SIMOLINKs are operated in a converter, data adoption and synchronization can be changed over from one to the other (cf. P 744). If this changeover is also to be possible during operation (converter status °014), this is to be enabled by the user. This function is only provided in the case of MASTERDRIVES MC units.
  Parameter values:
  - xx0x: No changeover during operation (converter status °014)
  - xx1x: Changeover of synchronization and data transfer allowed during operation

  In the case of operation in a ring with a master which triggers the bus cycle externally (e.g. SIMADYN D), the MASTERDRIVES slaves are to be configured for exact adherence to the bus cycle time. Otherwise, it is assumed internally that the bus cycle time is determined by the particular number of telegrams. The actual bus cycle time does not then correspond exactly to the time which has been set. This function is only provided in the case of units which can be synchronized (MASTERDRIVES MC).
  Parameter values:
  - x0xx: Bus cycle time corresponding to the calculated number of telegrams (normal operation)
  - x1xx: Exact adherence to the set bus cycle time

8.3.6 Diagnostics of the peer-to-peer functionality

The following diagnostics information is available to the user:

LED displays

Three LED displays are provided on the front section of the SLB optional board which supply information on the current operating status.

Operating display

LED	Status	Diagnostic information
Green	Flashing	Fault-free net data transfer via SIMOLINK
Red	Flashing	SLB operating
Yellow	Flashing	Data exchange with basic unit is okay

Table 8.3-1 SLB operating display

Fault display

LED	Status	Diagnostic information
Green	off/on	No net data exchange possible via SIMOLINK; bus cable is not connected or is defective
Red	off/on	Voltage supply for SLB cut off; replace SLB or basic unit
Yellow	off/on	No data exchange with the basic unit; bus cable is not connected or is defective; replace SLB or basic unit

Table 8.3-2 SLB fault display

Binectors

- **B0041: Time out:**
  Bit = 1 indicates that an interruption has occurred in cyclic data transfer. This status remains active until cyclic data transfer has been resumed.

NOTE

The reaction time is permanently stored in the SLB and cannot be changed.

Every time "Time out" occurs, the SLB diagnostics parameter (r748, Index 3) is incremented by the value 1 (→ statistics).
At the same time, the address of the node that has first noticed the interruption in the ring can be upread in r748, Index 5.

- **B0040: SLB telegram failure**
  Bit = 1 indicates that the telegram failure time set in the "SLB TlgOFF" parameter (P741) has run out in this node, without a valid SYNC signal having been received.
- **B0042: Start alarm**
  Bit = 1 indicates that the SIMOLINK ring is physically open and that a start cannot be carried out. This status is also signaled by alarm A002.
  Bit = 0 indicates that the SIMOLINK ring is physically closed.
- **B0043: Drive synchr.** (only MC)
  Bit = 1 indicates whether the CU is synchronized to the SIMOLINK BUS. Corresponds to the inverse of alarm A003.

- **B0047: SLB2 timeout** (only MC)
  Bit = 1 indicates that a timeout has been detected on the passive SIMOLINK bus.
- **B0048: SLB2 start** (only MC)
  Bit = 1 indicates that the passive SIMOLINK ring is physically open and a start cannot be carried out. This binector corresponds to alarm A004.
- **r748: SLB diagnostics**

  The diagnostic parameter is used to retrieve various status data of the SIMOLINK bus. The following information can be read from the various indices:

  r748.1: Number of error-free SYNC telegrams (corresponds to the bus cycles that have elapsed without error).

  r748.2: Number of CRC errors (telegrams with errors).

  r748.3: Number of timeout errors (bus interrupt). Note: On bus initialization, data traffic is interrupted several times, causing some timeout errors.

  r748.4: (Dispatcher only) last addressable address; on initialization the last address addressable in the selected configuration is entered here.

  r748.5: Address of the station that has signaled timeout.

  r748.6: Here, the hardware interrupt delay is stored that was calculated from the number of stations set (P743), or from the number of stations transferred during initialization (with automatic parameterization P743 = 0), and the position of the station in the SLB ring.

  r748.7: Position of the station in the SLB ring (result of the count during initialization).

  r748.8: Number of stations in the SLB ring (result of the count during initialization).

  r748.9: (MASTERDRIVES MC) deviation from the synchronization point. Cannot be synchronized, the value is set to NO_SYNCHRONIZATION (= 65535). Should not fluctuate outside 65515 (-20) and 20.

  r748.10: Pulse period adapted to the bus cycle time in 100 ns (e.g. pulse frequency 5kHz display value 2000). If no synchronization is possible, the value NO_SYNCHRONIZATION (= 65535) is entered.

  r748.11: Current state of the T0 counter. Should be 0 for active synchronization (MASTERDRIVES MC only).

  r748.14: Current state of the time slice counter. Should be 0 for active synchronization (MASTERDRIVES MC only).

  r748.15: Bus cycle time implemented in 10 µs.

  r748.16: Bus cycle time transmitted during initialization from the master/dispatcher in 10µs.

- **r750: SLB receive data**
  In indices 1 to 16, the received data word 1 to 16 are displayed.
- **r752: SLB transmit data**
  In indices 1 to 16, the received data word 1 to 16 (corresponds to channel 1 to 8) are displayed.

8.3.7 Synchronization of the control circuits by means of the bus cycle time (MC only)

The bus cycle time must be in a defined proportion to the time slots of the individual closed-loop control units in order to synchronize the decentralized lower-level control loops in the converters. The following applies to the time slots in the case of MASTERDRIVES MC:

- Current control in time slot T_0
- Speed control in time slot $T_1 = 2\ T_0$
- Position control in time slot $T_3 = 8\ T_0$
- Synchronism $T_3 = 8\ T_0$ or $T_4 = 16\ T_0$

Standard parameterization

- The time slot T_0 = 1/pulse frequency is set on the MASTERDRIVES MC by selecting the pulse frequency (P340).
  Thus the following applies to the selection of the bus cycle time:

  Bus cycle time P746 = 1 / P340 * 2^n
  n = slowest time slot to be synchronized T_n;
  where $n \in N = \{2, 3, ...\}$

  T_2 can be synchronized as a minimum. Individual synchronization of T_0 or T_1 cannot be implemented.

- Example:
  If the position control loops of the various converters have to be synchronized to each other, the selected bus cycle time has to be a 2^n-fold quantity of 4 T_0. At a pulse frequency of P340 = 5.0 kHz the resulting bus cycle time P746 is at least 0.80 ms (4 * 200 µs).

Synchronization of the slow time slots at a low bus cycle time

In a number of applications it is necessary to set a low bus cycle time and at the same time to synchronize the slower time slots. For this purpose, it is necessary to transfer additional time slot information from the dispatcher over the SIMOLINK to the transceivers. This information is generated in the dispatcher at connector K260. It must be transferred via the SIMOLINK and input to the transceivers at parameter P753. In parameter P754, the slowest time slot to be synchronized is set.

Example:

The bus cycle time should be as short as possible while at the same time the synchronization control is synchronized in T_4 for all drives. At a pulse frequency of 5 kHz (P340), the shortest bus cycle time is 0.80 ms (P746). The dispatcher sets connector K260 to SIMOLINK word 3 (P751 Index 3 = 260) for all transceivers (P753 = 7003). Parameter P754 is set to 4 (for T_4) at the dispatcher and at the transceivers.

Synchronization parameter assignment

Parameters:

- **P 746: SLB cycle time** (dispatcher)
  Serves for setting the bus cycle time. The bus cycle time can be set from 0.20 ms to 6.50 ms in increments of 10 µs. The bus cycle time of the dispatcher is transferred automatically to the slaves. The bus cycle time in effect can be upread from parameter r748 Index 15.
- **P753: Sync. time counter** (transceiver)
  Input parameter for additional time slot information from the dispatcher. This parameter must be connected to the SIMOLINK-connector (K7001 - K7016), which contains the time slot information.
- **P754: Max. sync. time slot** (dispatcher and transceiver)
  The slowest time slot n to be synchronized is entered here. This function will not work unless parameter P753 is connected correctly.

Connectors:

K260: Time counter (dispatcher only)
This connector contains additional time slot information from the dispatcher.

8.3.8 Synchronization diagnostics (MC only)

The following diagnostics information is available to the user:

Binectors

- **B0043: Drive synchronism**
  Bit = 1 indicates that the drive is running is synchronism.
  Bit = 0 indicates that the drive is not yet running is synchronism or cannot be synchronized. This status is also signaled by alert A003.

Parameters

- **r748 Index 9: Synchronism deviation**
  The value should vary between -20 (= 65515) and 20, if synchronization is functioning. A stable value of 65535 indicates that synchronization is turned off because the pulse frequency (P340) and the SLB cycle time do not go together.
- **r748 Index 11: T0 counter**
  The value should always be 0 when synchronization is functioning.

8.3.9 Switchover of the synchronization source (MC only)

MASTERDRIVES MC devices provide the option of plugging in and parameterizing two SIMOLINK modules and two CBP2s. Because of the physical situation, synchronization on only one of the communication modules and data transfer from only one of the two SIMOLINK modules is possible. Connecting up a second SIMOLINK ring would not therefore enable transfer of more data. The only possible applications are installations in which different machine configurations with different SIMOLINK-ring nodes are desired or necessary or where redundancy of the SIMOLINK rings is desired or necessary.

Parameter

- **P744: SLB selection** (dispatcher and transceiver)
  BICO parameter, Index 1, is for selecting a source (binector) by means of which the active SIMOLINK (synchronization and data source) is defined when two SIMOLINK boards are present in a MASTERDRIVES unit.
  By means of Index 2, the Profibus can be selected as the synchronization source. A SIMOLINK, if present, can no longer be used to transfer data; it only works as a transmitter in order to maintain telegram traffic in the SLB ring.
  The synchronization source is selected according to the following scheme:

	744.1	744.2
SLB1 (lower slot) active	0	0
SLB2 (higher slot) active	1	0
CBP active	x	1

- **P755: SIMOLINK configuration**
  If a 1 is set at the second position of the configuration parameter, changeover between the two SIMOLINK boards can be enabled during operation. This is only possible if the bus cycle time is the same even if changeover is enabled during operation.
  - xx0x: No changeover during operation (converter status °014)
  - xx1x: Changeover of synchronization and data transfer allowed during operation

Description of functioning

When two SIMOLINK boards are being operated in one unit, the active board is used for data transfer (same as when only one board is present). The passive board is initialized (SIMOLINK ring starts) and sends the parameterized transmit data. Synchronization and data transfer by the passive board is not possible. Transmit and read data are the same for the active and passive SIMOLINK. Different parameterizations of the two SIMOLINK boards are only possible in the case of the following parameters:

- Node address (P740)
- Number of nodes (P743)
- Number of channels (P745)
- Bus cycle time (P746)

The 1st index is allocated to SLB1 (lower slot) and the 2nd index is allocated to SLB2 (higher slot). Which of the two SLBs is the active one is determined by the selection (P744).

The diagnostic parameter (P748) always indicates the data of the active SIMOLINK.

If it has not been ensured by a master (e.g. SYMADYN D) that the two SIMOLINK rings are working synchronously, it can be assumed that, when a changeover is made to the passive SIMOLINK, there is no synchronization at first. The drives are synchronous with the bus again only after the synchronization time (at 5 kHz pulse frequency and 3.2 ms bus cycle time, maximum 7 sec.). In the case of applications where synchronicity is an essential component of functioning, changeover during operation should not be carried out.

Changeover during operation must be explicitly enabled by the user (P755). In addition, changeover during operation is prevented if synchronization to the previously passive SIMOLINK is not possible because different bus cycle times (P746) have been selected.

8.3.10 Special data and application flags

For special functions, further options for data transmission are available via the SIMOLINK bus.

Application flags

With application flags it is possible to transmit an additional four binary items of information. These are not explicitly assigned to any station, i.e. every station can read and set the application flags. Resetting is only possible via the dispatcher/master.

Parameterization:
P747 Src.SLB Appl.Flags:
Used to specify the binectors to be used as application flags.
B7010 to B7013:
These binectors indicate the applications flags received.

Special data

In addition to the 8 telegrams per station, a total of four special telegrams with 32 bits of useful data are available for data transmission in the SIMOLINK bus. The special telegrams can be read by any station but only written by the dispatcher (currently only MASTERDRIVES MC) / master.

Parameterization:
P756 Src.SLB special data: (dispatcher only)
Used to specify the double connectors to be transmitted as special data.
KK7131 to KK7137:
These connectors indicate the special data received.

8.3.11 Configuration (example of peer-to-peer functionality)

Technology Angular synchronism with 3 MASTERDRIVES MC units.

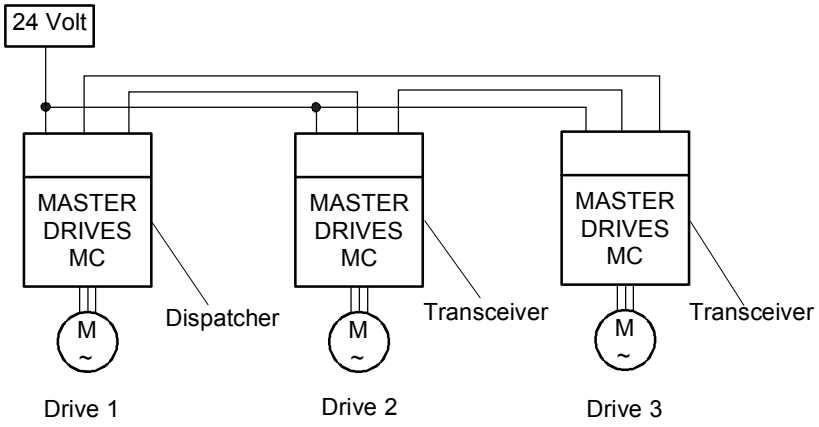

Fig. 8.3-7 Configuration example of peer-to-peer functionality

- Drive 1, master drive with integrated virtual master axis
  The master speed setpoint for the drive group is specified via an analog input or via the PROFIBUS DP.

  The integrated virtual master axis function generates a position, speed and acceleration setpoint for slave drives 2 and 3. In addition, the slave drives are powered up/down by the master drive (control word). This means that every slave drive is given its individual control word.
  Vice versa the slave drives send their individual status word to the master drive. This results in the following table:

		Receive		
		Master drive 1	**Slave drive 2**	**Slave drive 3**
Transmit	Master drive 1		STW_2 S_{set} n_{set} a_{set}	STW_3 S_{set} n_{set} a_{set}
	Slave drive 2	ZW_2		
	Slave drive 3	ZW_3		

Table 8.3-3 Transmitting and receiving control/status words between master and slave drives

- Drive 2 and 3, slave drives with integrated position control

Communication

The 3 SIMOLINK interfaces must be parameterized as follows for transmitting the process data:

- SLB in master drive 1 (dispatcher)
  The following 5 process data have to be transferred (written):
  - STW_2 = control word for drive 2
  - STW_3 = control word for drive 3
  - s_{set} = position setpoint
  - n_{act} = speed setpoint
  - a_{act} = acceleration setpoint

  5 telegrams (= 5 channels) are required for this.
- SLB in slave drive 2 (transceiver)
  One item of process data is transferred in ZW_2 (written).
  For this, one telegram (= 1 channel) is required.
  ZW_2 = status word of drive 2
- SLB in slave drive 3 (transceiver)
  One item of process data is transferred in ZW_3 (written).
  For this, one telegram (= 1 channel) is required.
  ZW_3 = status word of drive 3

Parameterization of the dispatcher

The following parameter settings are of significance for the dispatcher as the master drive:

- **P740 = 0** (Dispatcher function)
- **P745 = 5** (SLB channel number)
  This means that each node is provided with five telegrams for writing.

NOTE

The setting always depends on the requirements of the node with the largest required number of channels. In this example, this is the dispatcher (master drive 1) with five telegrams.

- **P746 = 1 ms** (SLB cycle time)
  A sufficient number of additional telegrams are automatically added to non-addressed nodes as is required to achieve this cycle time.

  Synchronization of the control loops in the converter via the bus cycle time: The bus cycle time must be in a defined relation to the time slots of the individual controls for synchronization of the decentralized lower-level control loops in the converters. The following is applicable for the time slots on MASTERDRIVES units:
  - Current control in time slot T_0
  - Speed control in time slot 2 T_0
  - Position control in time slot 4 T_0

- The time slot T_0 = 1/pulse frequency is set on MASTERDRIVES units by selecting the pulse frequency (P340). Thus the following applies for the selection of the bus cycle time:

  Bus cycle time = 2^n x slowest time slot to be synchronized; where $n \in N = \{2, 3, ...\}$

  Example:
  If the position control loops of the various converters have to be synchronized to each other, the selected bus cycle time has to be an n-fold quantity of 4 T_0.

Parameterization of the transceivers

Transceiver (slave drive 2) is given the node address 1 and transceiver (slave drive 3) is given the node address 2.

Parameterization of process data monitoring

The following diagrams show the assignment of the process data to be read or written using the example of master drive 1 and slave drive 2.

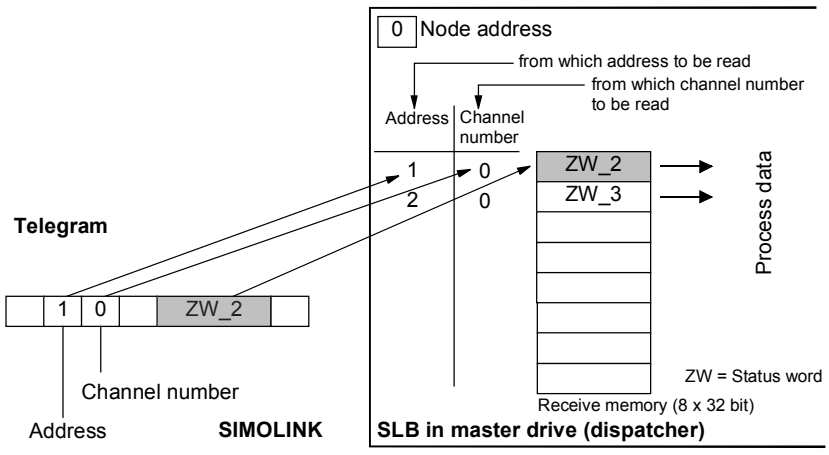

Fig. 8.3-8 Master drive 1, reading data

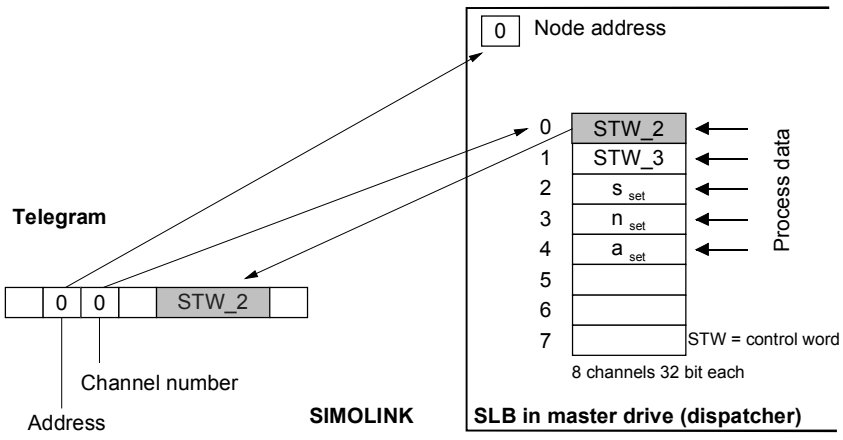

Fig. 8.3-9 Master drive 1, writing data

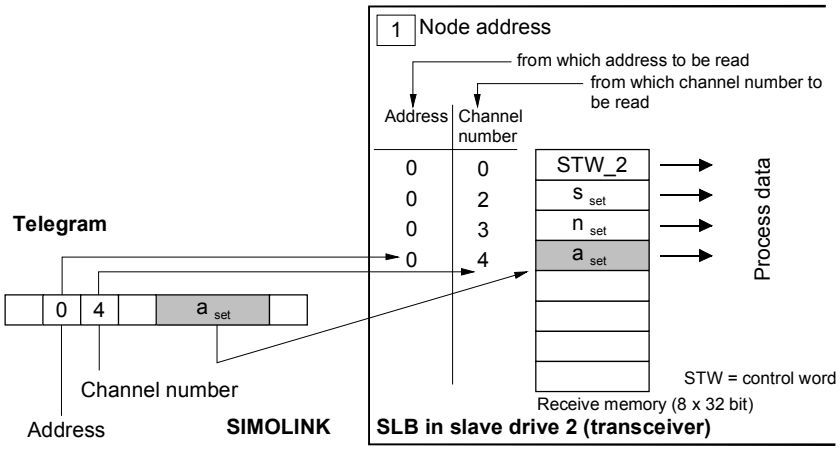

Fig. 8.3-10 Slave drive 2, reading data

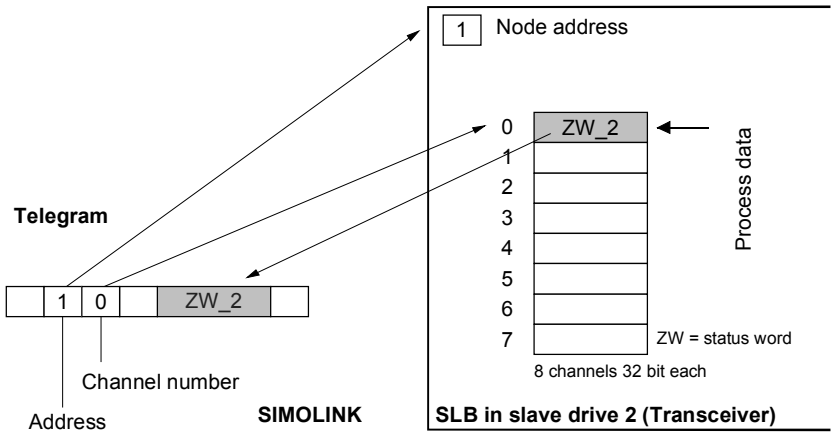

Fig. 8.3-11 Slave drive 2, writing data

8.3.12 Master/slave functionality

In the master-slave functionality, an SL master (SIMOLINK interface) operates in an automation system instead of the dispatcher (peer-to-peer).

There is always only one SL master in the SIMOLINK ring. All the other nodes are transceivers.

Bus topology

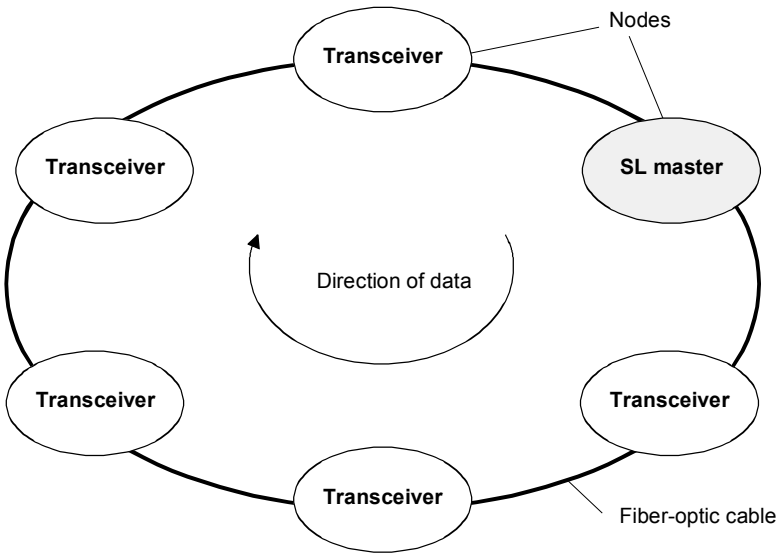

Fig. 8.3-12 SIMOLINK ring with SL master

SL master

The SL master is the SIMOLINK interface in "higher-level" open-loop and closed-loop control systems or industrial PCs. As far as the central control of telegram traffic is concerned, there is no difference between the dispatcher and the SL master. The task table also specifies in the case of the SL master which and how many telegrams the SL master shall send via the bus in one bus cycle.

Differences to the dispatcher:

- The applications of the "Master/slave" functionality require a different mechanism for data transfer than used in the "Peer-to-peer" functionality.
- Flexible address list (address gaps are possible), i.e. the task table can be configured a lot more freely.
- The number of channels used per transceiver can be individually determined and does not have to be identical. The maximum number of channels per transceiver is generally restricted to 8.
- The SL master itself has 8 channels for data transfer, just as in the case of the dispatcher or transceiver, however, at the same time it can use the telegrams with the address and channel number code of the transceivers for its data transfer.

NOTE

The SL master uses the "intelligence" and the possibilities offered by the open/closed-loop control system or the PC for configuring the task table. The following SL masters are currently available:

- SIMOLINK module in SIMATIC FM458
- Expansion board ITSL in SIMADYN D

Transceiver

In accordance with the peer-to-peer functionality

8.3.13 Application with master/slave functionality

Principle

This configuration is not based on the principle of freely selectable data transfer between MASTERDRIVES MC/VC units because control is effected from a higher-level automation system.

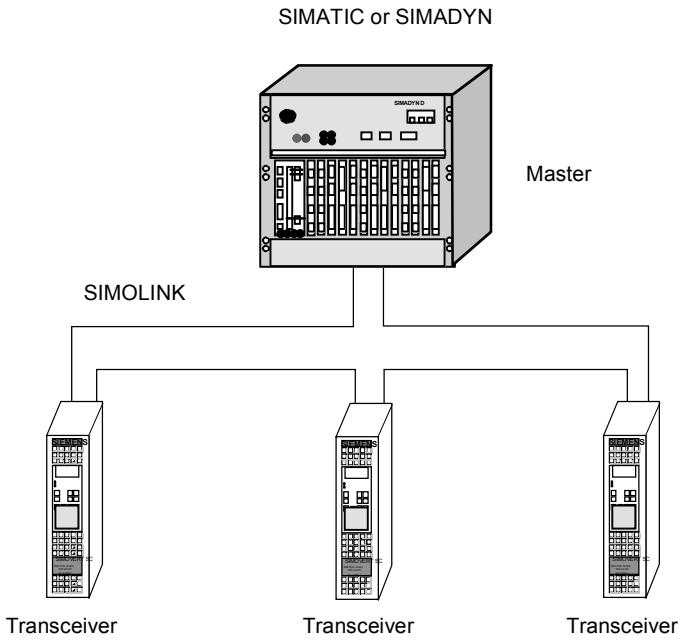

Fig. 8.3-13 Application example of master/slave functionality

There is a SIMOLINK interface in the automation system which also operates as a logical master in addition to the dispatcher function. This means that the automation system dispatches a maximum of eight 32 bit data back to the master by overwriting received telegrams with the dispatch information. This is the typical structure of data exchange according to the master/slave principle.

Rules for the exchange of data

- Each transceiver can read a maximum of 8 telegrams, however, the difference to the peer-to-peer functionality is that only telegrams which have an address corresponding to the address of the node or the master address 0 are read.
  Note: These telegrams must, of course, be entered in the task table of the master.
- As in the case of the peer-to-peer functionality, each transceiver can only write data on telegrams whose telegrams have the address of the transceiver.
- The master can read and write on all telegrams.

The master can implement data exchange between two transceivers by transferring the received data of one transceiver to the telegrams (= address) of the other.

NOTE

Every transceiver can also read the telegrams of any other node. However, whether the read data are receive or transmit data, depends on where the respective nodes are situated in the SIMOLINK ring (definite data traffic in the SIMOLINK ring).

NOTICE

The SIMADYN-D master can be operated in different SIMOLINK operating modes.
Modes 3 to 5 are suitable for error-free data traffic with MASTERDRIVES. Especially when using the asynchronous mode (= 1) problems can arise on the MASTERDRIVES MC/VC because the hardware interrupt generated by the bus cycle might not be equidistant and hardware interrupts triggered in too quick succession will cause a computation time overflow in the MASTERDRIVES MC/VC basic unit.

8.4 CBC Communications Board

8.4.1 Product description

The optional CBC board (Communication Board CAN) is used for connecting drives to higher-level automation units and other field units by means of the CAN (Controller Area Network) protocol.

View

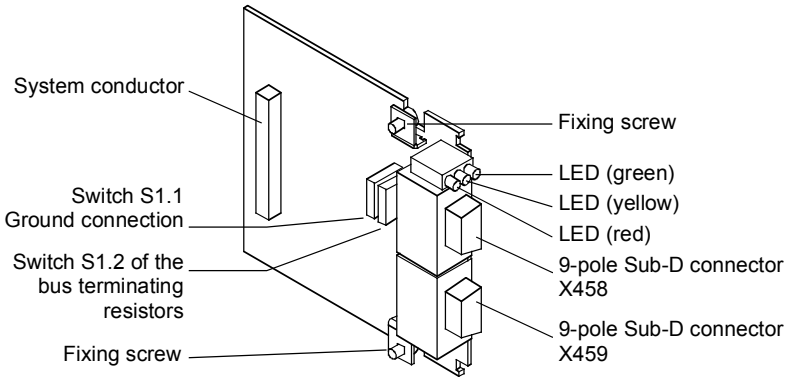

Fig. 8.4-1 View of the optional CBC board

Technical information

The optional board has three LEDs (green, yellow and red) for providing information on the current operating status.

It is supplied with voltage via the basic unit.

The CBC can be simply plugged into the electronics box of the converter and works with all software and hardware output-states of the MASTERDRIVES converters.

The CBC has a 9-pole Sub-D connector (X458) and a 9-pole Sub-D socket (X459) for connecting it to the CAN bus. The pins of these connecting elements are identically assigned and connected through internally. They are also short-circuit proof and floating.

Functions

The CAN (Controller Area Network) protocol is permanently specified in the international standards recommendation, ISO-DIS 11898. Here, however, only the electrical part of the physical and the data link layers are specified (layer 1 and layer 2 in the ISO-OSI-7 layer reference model). The CiA, with its DS 102-1 recommendation, defines the bus interface and the bus medium for use as an industrial field bus.

The CBC complies with the specifications in ISO-DIS 11898 and in DS 102-1.

A data profile for variable-speed drives similar to the VDI/VDE guideline 3689 "PROFIBUS profile for variable speed drives" has not yet been defined. The specifications of the "PROFIBUS profile for variable speed drives" are therefore used for the net data.

For the drives, VDI/VDE guideline 3689 specifies the net-data structure with which a communications partner can access the drive slaves. The net-data structure is divided into two areas:

- The process-data area, i.e. control words and setpoints or status information and actual values
- The parameter area for reading/writing parameter values, e.g. reading out faults and reading out information on the properties of a parameter such as reading out min./max. limit values etc.

The number of process data (maximum 16) and activation of the parameter interface is parameterized on the unit. The parameterization of the net-data structure depends on the function of the drive within the overall automation system. The process data are processed with the highest priority and in the shortest time slices. The process data are for controlling the drive within the overall automation system, e.g. power-on/power-off, stipulation of setpoints, etc.

With the help of the parameter area, the user has free access to all parameters in the converter (CU and, if necessary, the TB) via the bus system. This facility can be used, for example, for reading out detailed diagnostic information, fault messages and so on. Information for visualizing the drive can thus be called using a higher-level system, e.g. a PC, without affecting the transfer of process-data.

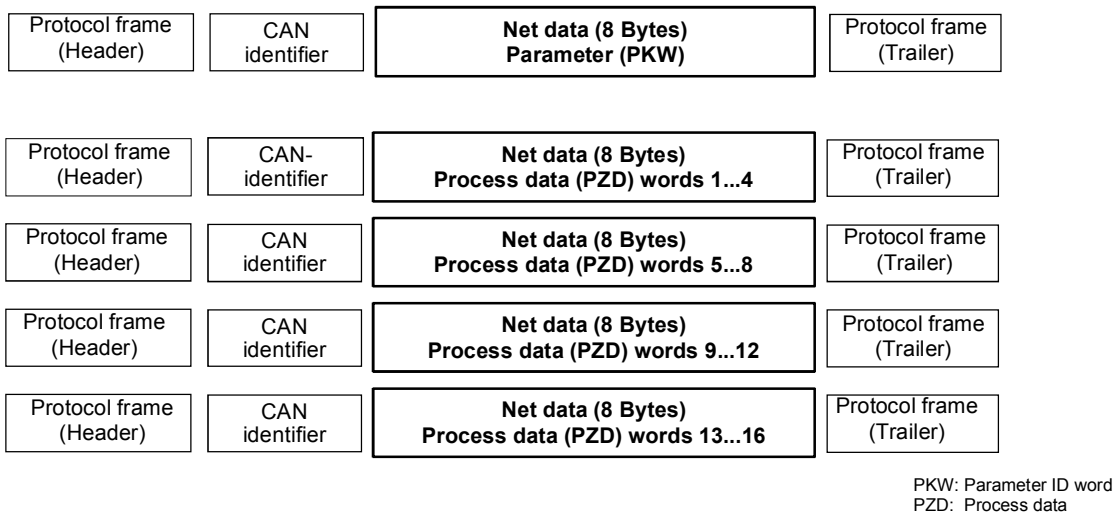

Fig. 8.4-2 Structure of the net data in the telegrams of the CAN protocol

Controlling and operating the MASTERDRIVES converters via the CAN bus

In the process-data area (see Fig. 1-2), all the information is transferred which is necessary for controlling a speed-controlled drive in an integrated technical process. Control information (control words) and setpoints are given to the converter by the CAN-bus master. In the reverse direction, information on the status of the converter (status words) and actual values are transferred.

The CBC communications board stores the received process data in the dual-port RAM in the sequence in which they are transferred in the telegram.

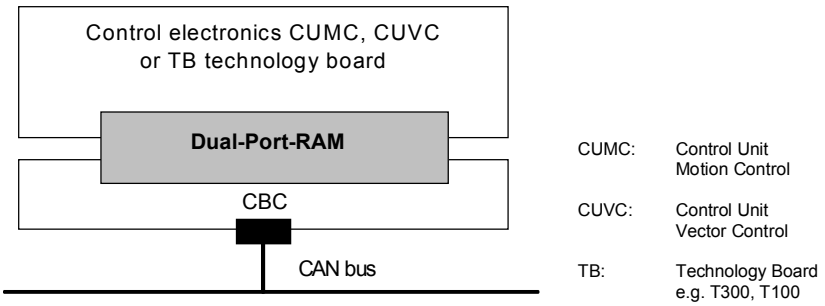

Fig. 8.4-3 Coupling of the CBC to the converter via the dual-port RAM interface

An address is assigned to each word in the dual-port RAM. The contents of the dual-port RAM in the converter (CU + if necessary the TB) can be freely routed by means of parameters, e.g. the second word in the process-data area of the telegram as a speed setpoint sent to the ramp-function generator connected downstream. The same mechanism applies to other setpoints and to each individual bit of the control word. The procedure is also used in the reverse direction for transferring actual values and the status words.

Besides supporting the normal exchange of process data, the CBC communications board also supports broadcasting (same process data for all drives on the bus), multicasting (same process data for a group of drives on the bus) and cross traffic (data exchange between the individual drives without participation of a CAN-bus master).

Diagnostic LEDs quickly provide the user with information on the current status of the CBC. Detailed diagnostic information can be directly read out of the diagnostics memory of the CBC by means of a diagnostic parameter.

8.4.2 Mounting methods / CBC slots

NOTE

The CBC can be directly mounted into Compact PLUS units. In all other types of unit in this series, it is mounted on the CUMC or CUVC or connected in the electronics box with an adapter board.

8.4.2.1 Mounting positions of the CBC in MC Compact PLUS units

NOTE

In principle, the optional CBC board (Communications Board CAN) can be mounted in any slot. Please bear in mind, however, that an encoder board always requires Slot C.

Position of the slots

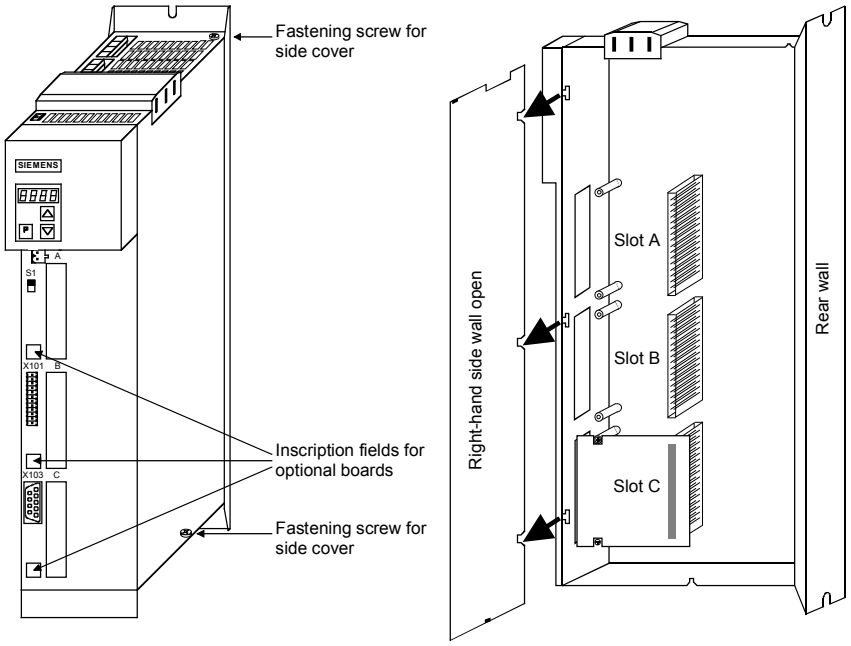

Fig. 8.4-4 Position of the slots (with side wall on the right removed)

DANGER

Due to the DC link capacitors, hazardous voltages are still present in the converter up to 5 minutes after it has been disconnected from the power supply. Before opening the converter, wait until the capacitors have completely discharged.

8.4.2.2 Mounting positions of the CBC in Compact and chassis units of function classes MC (CUMC) and VC (CUVC)

Slots

In the electronics box of the compact-type and chassis-type converters and inverters, there are up to six slots available for installing an optional board. The slots are marked with the letters A to G. Slot B is not present in these types of unit; it is used in Compact PLUS units.

If you wish to use Slots D to G, you must first mount the LBA (Local Bus Adapter) and the corresponding adapter board (MLFB).

NOTE

In principle, you can operate the optional CBC board (Communication Board CAN) in any slot. Please bear in mind, however, that an encoder board always needs Slot C and that the LBA requires the slots to be used in a particular sequence.

The CBC can be mounted on the adapter board in both slots, i.e. TOP and/or BOTTOM.

Position of the slots

The slots are located at the following positions:

- Slot A CU board Top
- Slot C CU board Bottom
- Slot D Adaptation board in mount. pos. 2 Top
- Slot E Adaptation board in mount. pos. 2 Bottom
- Slot F Adaptation board in mount. pos. 3 Top
- Slot G Adaptation board in mount. pos. 3 Bottom

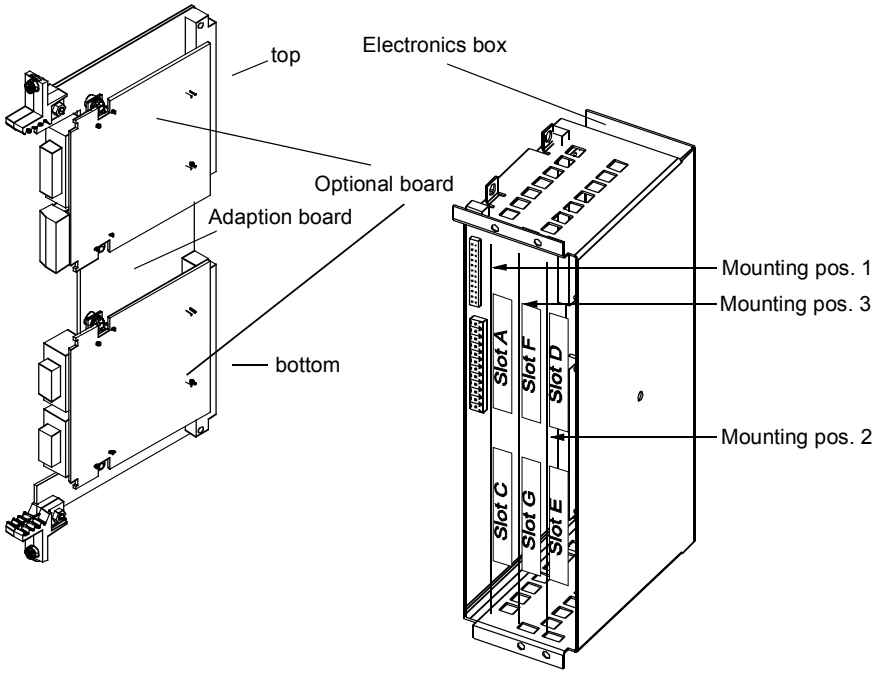

Fig. 8.4-5 Adaptation board with optional boards and position of the slots for Compact units and chassis-type units

DANGER

Due to the DC link capacitors, hazardous voltages are still present in the converter up to 5 minutes after it has been disconnected from the power supply. Before opening the converter, wait until the capacitors have completely discharged.

For technical reasons, certain sequences for using the slots are stipulated for the LBA.

If only one adaptation board with optional boards is inserted in the electronics box, it must always be inserted in slot +1.B2 (ON THE RIGHT), i.e. mounting position 2.

If a T100 / T300 or T400 technology board is plugged into the electronics box in addition to the adapter board with CBC, the technology board must be plugged into position +1.B2. In this case, the CBC is plugged into position +1.B3.

8.4.2.3 Mounting positions of the CBC in Compact type and chassis type units with the CU of the function classes FC (CU1), VC (CU2) or SC (CU3)

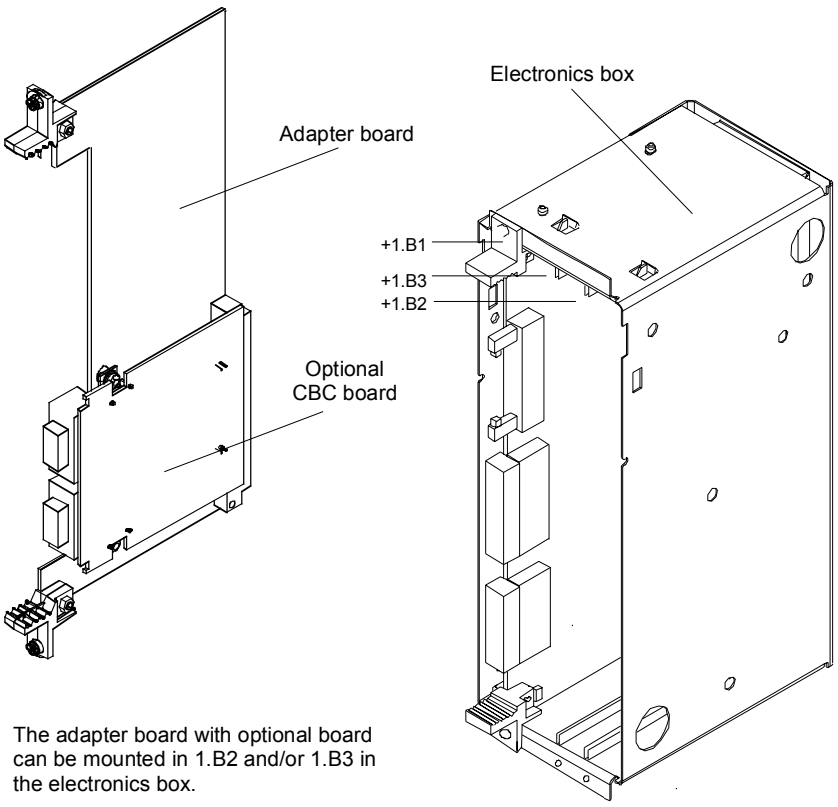

Fig. 8.4-6 Electronics box with free slots (+1.B2 and +1.B3) and adapter board with CBC

On the adapter board, **only one** CBC may be mounted in position X 198, i.e. BOTTOM.

In order to mount the CBC with adapter board, the LBA (Local Bus Adapter) backplane adapter must first be mounted.

NOTE

If only one optional board is used, it must always be plugged in position +1.B2 (RIGHT) in the electronics box.

If, in addition to the CBC, a technology board (T100 / T300 or T400) is plugged into the electronics box, the technology board must be plugged into position +1.B2. In this case, the CBC is plugged into position +1.B3.

8.4.2.4 Mounting positions of the CBC in VC Compact PLUS units

NOTE

In principle, the optional CBC board (Communications Board CAN) can be mounted in any slot.

Position of the slots

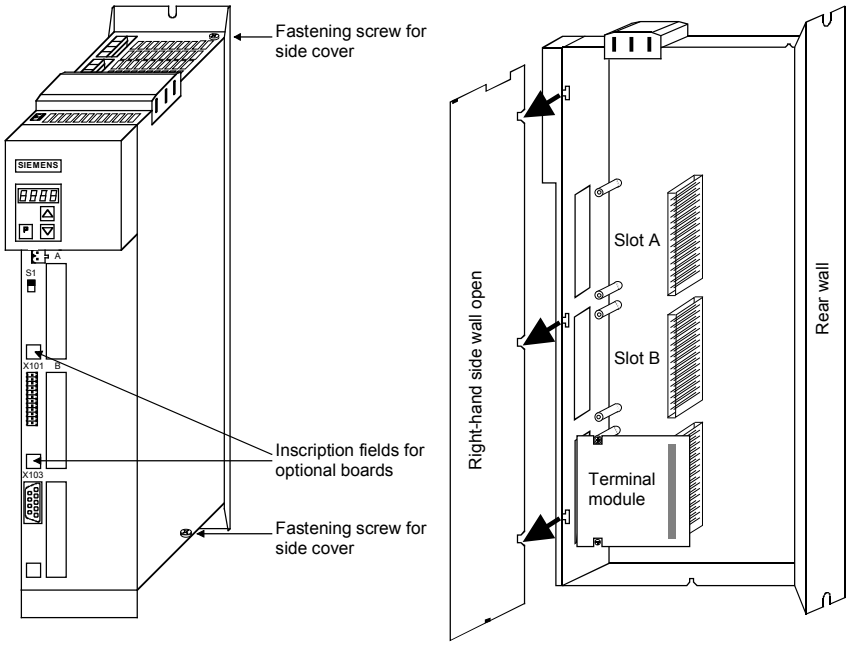

Fig. 8.4-7 Position of the slots (with side wall on the right removed)

DANGER

Due to the DC link capacitors, hazardous voltages are still present in the converter up to 5 minutes after it has been disconnected from the power supply. Before opening the converter, wait until the capacitors have completely discharged.

8.4.3 Connecting

DANGER

The SIMOVERT MASTERDRIVES are operated with high voltages. Any work on the unit may only be carried out by qualified personnel. If this warning is ignored, serious bodily injury or considerable damage to property can occur as a consequence.

Because of the DC link capacitors, there continues to be dangerous voltage in the unit until up to 5 minutes after disconnection. The unit must not therefore be opened until at least this length of time has expired.

Even when the motor is at a standstill, the power terminals and the control terminals can carry voltage. During work on the converter, it is to be disconnected from supply.

When handling the opened converter, it must be kept in mind that live components are exposed.

NOTICE

The CBC contains electrostatically sensitive components. These components can very easily be destroyed by improper handling.

8.4.3.1 Connection of the bus cable

The optional CBC board has a 9-pole Sub-D connector (X458) and a 9-pole Sub-D socket (X459) which are provided for connection to the CAN bus.
Both terminals are identically assigned and connected through internally. They are also short-circuit proof and floating.

X458, X459

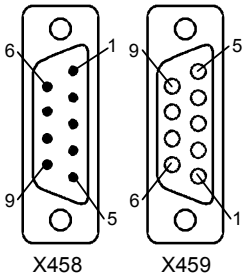

Pin	Designation	Significance
1	-	Not assigned
2	CAN_L	CAN_L bus cable
3	CAN_GND	CAN ground (ground M5)
4	-	Not assigned
5	-	Not assigned
6	CAN_GND	CAN ground (ground M5)
7	CAN_H	CAN_H bus line
8	-	Not assigned
9	-	Not assigned

Table 8.4-1 Terminals X458 (pins) and X459 (socket)

The two Sub-D connectors X458 and X459 are identically assigned and all conductors are connected through internally.

The bus cable must have at least four cores, stranded in pairs, with a wave resistance of 120 ohms, e.g. the PYCYM wiring cable from SIEMENS.

Order No.: 5DV5 002 PYCYM 2 x 2 x 0.6

As a plug, the Sub-D connector SBM 383 from SIEMENS is recommended:

Connector components	Order No.
9-pole male connector	V42254-A1115-A209
9-pole female connector	V42254-A1115-B209
Housing (shielded)	V42254-A6000-G109
Knurled-head screw for screw interlocking	V42254-A112-V009

Mounting the bus cable

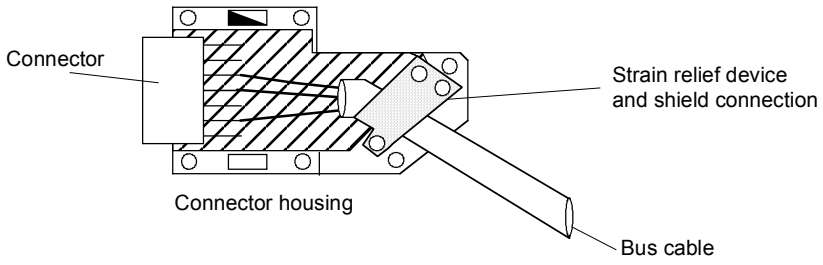

Fig. 8.4-8 Connecting the bus cables

- When stripping the insulation off the shield, make sure that the shield is not damaged!
- When stripping the insulation off the core ends, make sure that the copper core is not damaged!

Data transfer rate	Max. cable length (in m)
10 kBit/s	1000
20 kbit/s	1000
50 kBit/s	1000
100 kBit/s	750
125 kBit/s	530
250 kBit/s	270
500 kBit/s	100
800 kBit/s	20
1 Mbit/s	9

Table 8.4-2 Cable length in relation to the baud rate

8.4.3.2 EMC measures

For fault-free CAN bus operation, the following measures are necessary:

Shielding

NOTICE

The bus cables must be twisted and shielded and are to be routed separately from power cables, the minimum clearance being 20 cm. The shield must be connected through the largest possible surface area on both sides, i.e. the shield of the bus cable between 2 converters must be connected to the converter housing or the connector housing at **both** ends. The same applies to the shield of the bus cable between the CAN bus master and the converter.

If bus and power cables intersect, they must do so at an angle of 90 °.

With regard to the CAN bus, there are two ways of attaching the shield:

1. Attaching the shield with the help of shield clamps:
   The shield of the bus cable can be attached to the converter housing with the help of shield clamps (Compact units) or shield clamps and cable ties (chassis units). How to use the shield clamps is shown in Fig. 8.4-8 and Fig. 8.4-9. In this case, the shield must not be exposed in the bus connector at the CBC but at the converter housing (see Fig. 8.4-10).
2. Attaching the shield in the connector housing:
   The shield of the bus cable can be connected to the shield of the connector housing and is then connected to the CBC board via the connector and to ground as well (see Fig. 8.4-7).

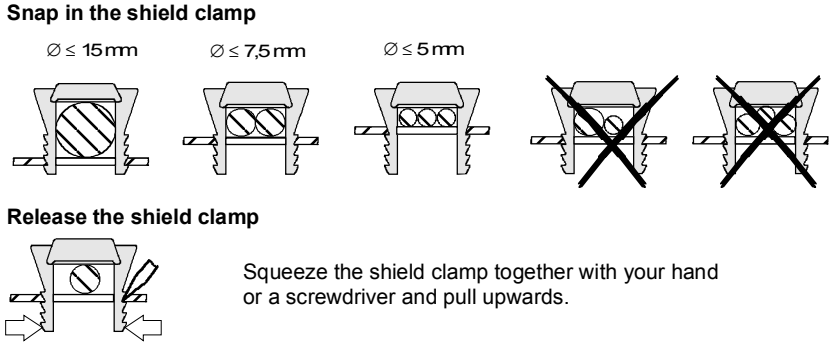

Fig. 8.4-9 Using the shield clamps

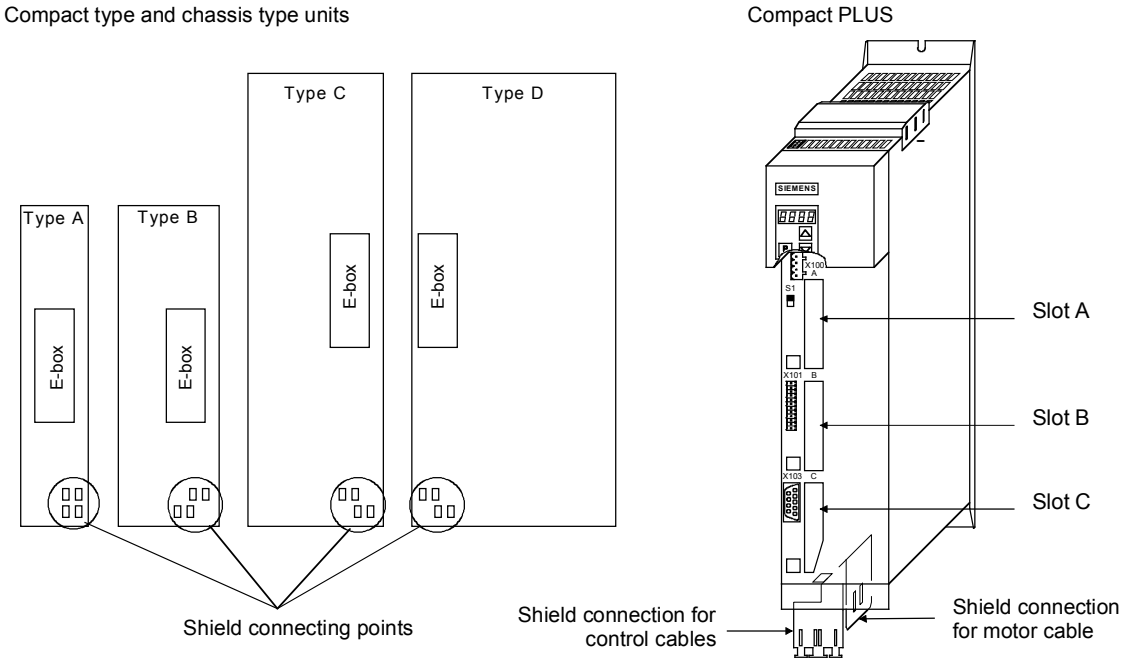

Fig. 8.4-10 Position of the shield connecting points

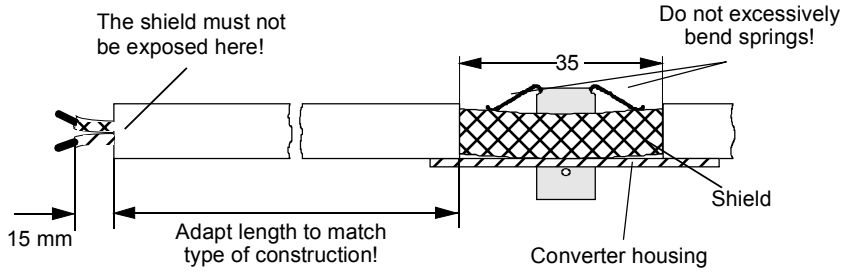

Fig. 8.4-11 Removing insulation from the cable when shield clamps are used

Potential equalization

- Please avoid differences in potential (e.g. as a result of different power supply levels) between the converters and the PROFIBUS-DP master.
- Use equipotential bonding cables:
  - 16 mm^2 Cu equipotential bonding cables up to 200 m
  - 25 mm^2 Cu equipotential bonding cables over 200 m
- Route the equipotential bonding cables so that there is the smallest possible surface between the equipotential bonding cables and signal cables.
- Connect equipotential bonding cables to the ground/protective conductor through the largest possible surface area.

Laying cables

Please comply with the following instructions when laying cables:

- Do not lay bus cables (signal cables) directly parallel to power cables.
- Lay signal cables and the associated equipotential bonding cables with the lowest possible distance between them and on the shortest routes.
- Lay power cables and signal cables in separate cable ducts.
- Attach shields through a large surface area.

8.4.3.3 Bus termination of the CAN bus (jumper S1.2)

For fault-free operation of the CAN bus, the bus cable must be terminated with bus terminating resistors at both ends (see Fig. 8.4-11). The bus cable from the first CAN bus node up to the last CAN bus node is to be regarded as **one** bus cable so that the CAN bus must only be terminated twice.

The bus terminating resistors must be connected into the circuit at the first bus node (e.g. the master) and the last bus node (e.g. the slave). If the bus-terminating node is a CBC, please close jumper S1.2 of the DIP-FIX switch, S1, on the CBC board!

NOTE

Please ensure that the bus termination is only connected in the circuit at the first bus node and the last bus node (e.g. CBC)!

Jumper	Function	As supplied
S1.2	Bus termination X458/459	Open (no bus termination)

Table 8.4-3 Bus termination with switch S1

8.4.3.4 Ground connection (jumper S1.1)

Jumper S1.1 normally remains open. If the CAN bus interface of the master is operated as a ground-free interface, you can close jumper S1.1 on one converter in order to connect the bus to ground.

Jumper	Function	As supplied
S1.1	Ground connection, interface ground (X458/459)	Open (no bus termination)

Table 8.4-4 Ground connection with switch S1

NOTE

For fault-free operation of the CAN bus, the bus cable must be terminated with bus terminating resistors at both ends. The bus cable from the first CAN bus node up to the last CAN bus node is to be regarded as one bus cable so that the CAN bus must only be terminated twice.

Switch S1.2 of the bus terminating resistors is located on the optional board behind connector X458.

NOTE

If the CAN bus interface of the master is to be operated ground-free, you can close switch S1.1 at one node in order to connect the bus to ground.

The switch for ground connection is located on the optional board behind connector X458.

8.4.3.5 Interface X458 / X459 with jumper strip S1

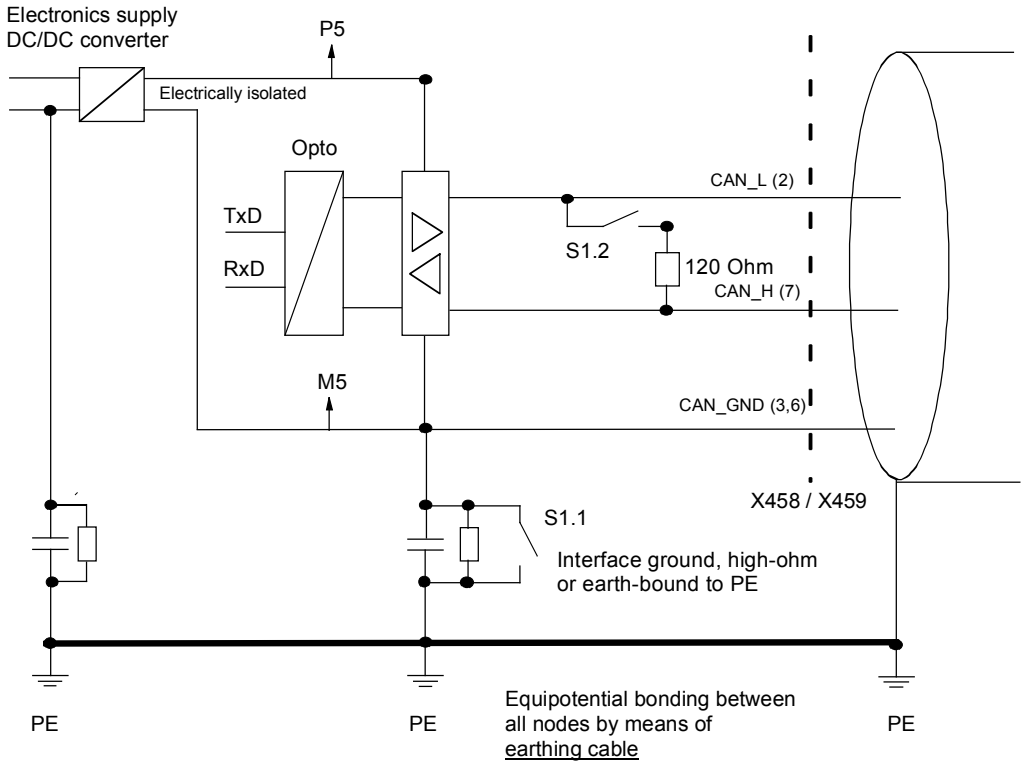

Fig. 8.4-12 Function of jumper strip S1

8.4.3.6 Recommended circuits

Replacing the CBC with bus interruption

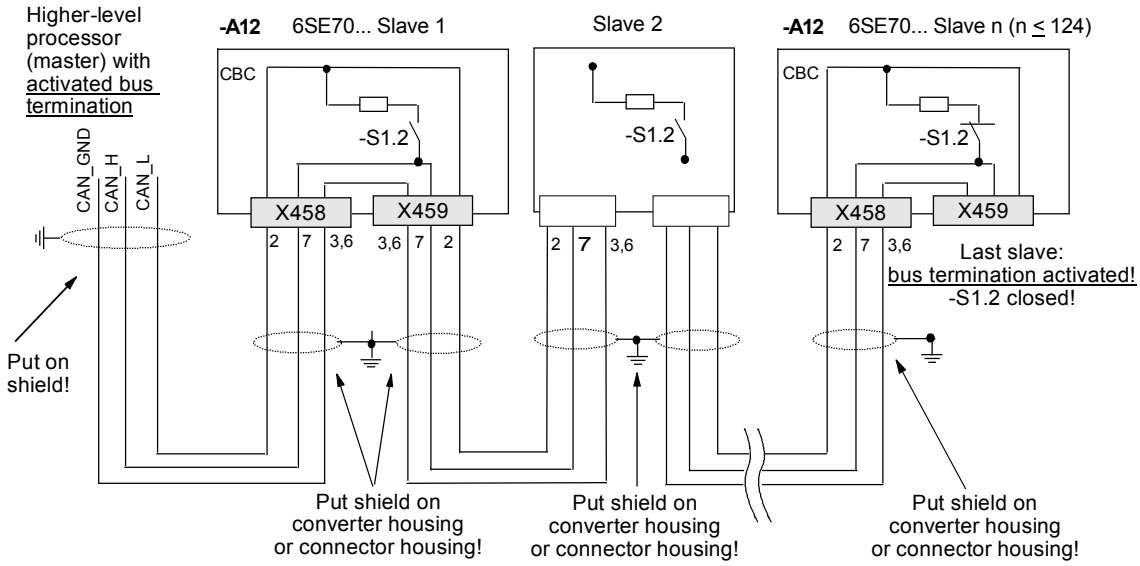

Fig. 8.4-13 Bus connection interrupted when connector X458 or X459 is pulled out

Replacing the CBC without bus interruption

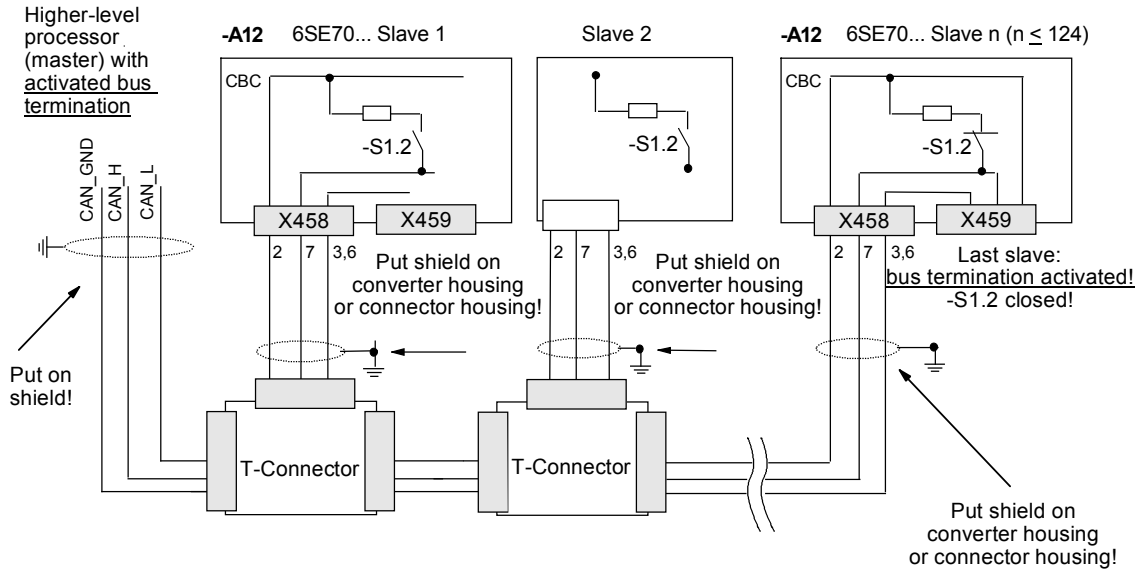

Fig. 8.4-14 Bus connection not interrupted when connector X458 is pulled out

8.4.4 Data transfer via the CAN bus

8.4.4.1 General

With regard to the transfer of net (useful) data, a distinction is made between parameter data (PKW data) and process data (PZD data) (see also Section 8.4.1 "Product description").

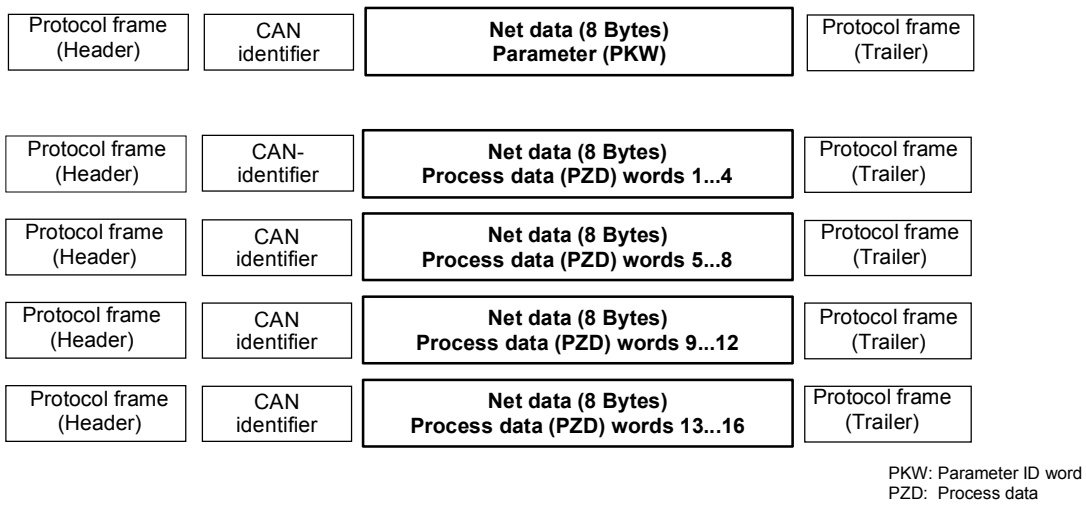

Fig. 8.4-15 Structure of the net data in the telegrams of the CAN protocol

A CAN data telegram consists of the protocol header, the CAN identifier (ID), up to 8 bytes of net data and the protocol trailer.

The CAN identifier is used for unambiguously identifying the data telegram. In the standard message format, a total of 2048 different CAN identifiers are possible and, in the extended message format, 2^{29} CAN identifiers. The extended message format is tolerated by the CBC but not evaluated.

The CAN identifier also specifies the priority of the data telegrams. The lower the number of the CAN identifier, the higher its priority. If two or more bus nodes want to send data telegrams at the same time, the CAN telegram with the lowest CAN identifier and thus the highest priority is accepted.

A maximum of 8 bytes of net data can be transferred in a CAN data telegram. The PKW area always consists of 4 words or 8 bytes, i.e. the data can be transferred in a single data telegram.

In contrast to this, the process data area for MASTERDRIVES consists of 16 words, i.e. a total of 4 data telegrams are needed to transfer all possible process data.

8.4.4.2 Parameter area (PKW)

With the PKW mechanism, you can perform the following tasks:

- reading parameters
- writing parameters
- reading the parameter description (parameter type, max./min. value, etc.)

The parameter area is always composed of 4 words.

1st word:	**Parameter ID (PKE)**			
	Byte 1		Byte 0	
Bit No.:	15 12	11	10	0
	AK	SPM	PNU	

2nd word:	**Parameter index (IND)**	
	Byte 3	Byte 2
Bit No.:	15 8	7 0
	Bit 15 = PARA PAGE SEL	Index

	Parameter value (PWE)	
3rd word:	Byte 5	Byte 4
	Parameter value **Low** (PWE1)	
4th word:	Byte 7	Byte 6
	Parameter value **High** (PWE2)	

AK: Task or reply ID
SPM: Toggle bit for processing the parameter change report (not supported by the CBC)
PNU: Parameter number

Parameter ID (PKE)

The parameter ID (PKE) is **always** a 16-bit value.

Bits 0 to 10 (PNU) contain the number of the required parameter. The meaning of the parameters can be found in the section, "Parameter list", of the converter operating instructions.

Bit 11 (SPM) is the toggle bit for parameter change reports.

NOTE

Parameter change reports are not supported by the CBC.

Bits 12 to 15 (AK) contain the task reply ID.

The meaning of the task ID for the task telegram (master → converter) is shown in Table 8.4-5. It corresponds to the specifications in the "PROFIBUS profile for variable-speed drives". Task IDs 10 to 15 are specific to SIMOVERT MASTERDRIVES and are not defined in the PROFIBUS profile.

The meaning of the reply ID for the reply telegram (converter → master) is shown in Table 8.4-6. This also corresponds to the specifications in the "PROFIBUS profile for variable-speed drives". Reply IDs 11 to 15 are specific to SIMOVERT MASTERDRIVES and are not defined in the PROFIBUS profile. If the reply ID has the value 7 (task cannot be executed), an error number is placed in parameter value 1 (PWE1).

Task ID	Meaning	Reply ID	
		positive	negative
0	No task	0	7 or 8
1	Request parameter value	1 or 2	↑
2	Change parameter value (word) for non-indexed parameters	1	|
3	Change parameter value (double word) for non-indexed parameters	2	|
4	Request descriptive element **1**	3	|
5	Change descriptive element **(not with the CBC)**	3	|
6	Request parameter value (array) **1**	4 or 5	|
7	Change parameter value (array, word) for indexed parameters **2**	4	|
8	Change parameter value (array, double word) for indexed parameters **2**	5	|
9	Request number of array elements	6	|
10	Reserved	-	|
11	Change parameter value (array, double word) and store in the EEPROM **2**	5	|
12	Change parameter value (array, word) and store in the EEPROM **2**	4	|
13	Change parameter value (double word) and store in the EEPROM	2	|
14	Change parameter value (word) and store in the EEPROM	1	↓
15	Read or change text **(not with the CBC)**	15	7 or 8

1 The required element of the parameter description is specified in IND(2nd word)

2 The required element of the indexed parameter is specified in IND(2nd word)

Table 8.4-5 Task ID (master -> converter)

Reply ID	Meaning
0	No reply
1	Transfer parameter value in the case of non-indexed parameters (word)
2	Transfer parameter value in the case of non-indexed parameters (double word)
3	Transfer descriptive element **1**
4	Transfer parameter value (array, word) in the case of indexed parameters **2**
5	Transfer parameter value (array, double word) in the case of indexed parameters **2**
6	Transfer number of array elements
7	Task cannot be executed (with error number)
8	No operator change rights for the PKW interface
9	Parameter change report (word) **(not with the CBC)**
10	Parameter change report (double word) **(not with the CBC)**
11	Parameter change report (array, word) **2 (not with the CBC)**
12	Parameter change report (array, double word) **2 (not with the CBC)**
13	Reserved
14	Reserved
15	Transfer text **(not with the CBC)**

1 The required element of the parameter description is specified in IND (2nd word)

2 The required element of the indexed parameter is specified in IND (2nd word)

Table 8.4-6 Reply ID (converter -> master)

Example of parameter identifier

Source for the ON/OFF command (control word 1, bit 0): P554 (=22A Hex)
Change parameter value (array, word) and store in the EEPROM.

1st word	Parameter ID (PKE)			
Bit No.:	15 12	11	10 0	
	AK	SPM	PNU	
	Byte 1		Byte 0	
Binary value	1 1 0 0	0	0 0 1 0	0 0 1 0	1 0 1 0
HEX value	C	2	2	A

Bits 12 to 15: Value = 12 (= "C" Hex); change parameter value (array, word) and store in the EEPROM

Bits 0 to 11: Value = 554 (= "22A" Hex); parameter number without a set parameter change report bit

Error numbers in the case of reply "Task cannot be executed"

Error numbers in the case of reply "Task cannot be executed" (converter parameters).
The error numbers are transferred in the 3rd word (PWE1) of the reply.

No.	Meaning	
0	Non-permissible parameter number (PNU)	If there is no PNU
1	Parameter value cannot be changed	If the parameter is a visualization parameter
2	Upper or lower limit exceeded	–
3	Erroneous subindex	–
4	No array	In the case of tasks for indexed parameters, to a non-indexed parameter e.g. Task: 'Change parameter value (word, array)' for non-indexed parameter
5	Incorrect data type	–
6	Setting not allowed (can only be reset)	–
7	Descriptive element cannot be altered	Task never possible with MASTERDRIVES
11	No operator control rights	–
12	Key word missing	Converter parameter: 'Access key' and/or 'Parameter special access' not correctly set
15	No text array present	–
17	Task cannot be executed because of operating status	Converter status does not permit the set task at the moment
101	Parameter number deactivated at present	–
102	Channel width too small	Parameter reply too long for the CAN telegram
103	PKW: number incorrect	*Cannot occur with the CBC*
104	Parameter value not admissible	–
105	The parameter is indexed	In the case of tasks for non-indexed parameters, to an indexed parameter e.g. Task: 'PWE, change word' for indexed parameter
106	Task not implemented	–

Comment on error number 102:

This error number is transferred if the parameter reply to a parameter task is longer than the available 8 bytes of the CAN data telegram and therefore cannot be transferred. The data are not divided up to create several telegrams.

Comment on error number 104:

This error number is transferred if, in the converter, no function has been assigned to the parameter value which is to be adopted or if the value cannot be accepted at the time of the change for internal reasons (even though it is within the limits).

Table 8.4-7 Error numbers in the case of reply "Task cannot be executed" (converter parameter)

Example

The parameter 'PKW number' for the G-SST1 (number of net data in the PKW channel):

Minimum value: 0 (0 words)
Maximum value: 127 (corresponds to variable length)
Permissible values for USS: 0, 3, 4 and 127

If a change task with a PWE other than 0, 3, 4 or 127 is sent to the converter, the reply is: 'Task cannot be executed' with error value 104.

Parameter index (IND) 2nd word

The index is an 8-bit word and is always transferred over the CAN bus in the low byte (bits 0 to 7) of the parameter index (IND). The high byte (bits 8 to 15) of the parameter index (IND) contains the parameter page selection bit (bit 15).

The parameter page selection bit acts as follows:

If this bit = 1, the parameter number (PNU) transferred in the PKW request is given an offset of 2000 in the CBP and then passed on.

Parameter designation (as per parameter list)	Serial parameter number	Parameter addresses via PROFIBUS		
		PNU [decimal]	PNU [hex.]	Bit *)
P000 - P999 (r000 - r999)	0 - 999	0 - 999	0 - 3E7	= 0
H000 - H999 (d000 - d999)	1000 - 1999	1000 - 1999	3E8 - 7CF	= 0
U000 - U999 (n000 - n999)	2000 - 2999	0 - 999	0 - 3E7	= 1
L000 - L999 (c000 - c999)	3000 - 3999	1000 - 1999	3E8 - 7CF	= 1

*) Parameter page selection

In the case of an indexed parameter, the required index is transferred. The meaning of the indices can be found in the section, "Parameter list", of the instruction manual for the converter.

In the case of a descriptive element, the number of the required element is transferred. The meaning of the descriptive elements can be found in the "PROFIBUS profile for variable-speed drives" (VDI/VDE 3689).

Example Parameter index

Source for the ON/OFF1 command (control word 1, bit 0):
P554 (=22A Hex)
Change parameter value of index 1.

2nd word	Parameter index (IND)															
Bit No.:	15							8	7							0
	Byte 3								Byte 2							
Binary value	0	0	0	0	0	0	0	0	0	0	0	0	0	0	0	1
HEX value	0				0				0				1			

Bits 8 to 15: Bit 15 parameter page selection bit

Bits 0 to 7: Index or number of the descriptive element

Parameter value (PWE) 3rd and 4th word

The parameter value (PWE) is **always** transferred as a double word (32 bits). **Only one** parameter value can ever be transferred in a telegram.

A 32-bit parameter value is composed of PWE1 (least significant word, 3rd word) and PWE2 (most significant word, 4th word).

A 16 bit parameter value is transferred in PWE1 (least significant word, 3rd word). In this case, you must set PWE2 (most significant word, 4th word) to the value 0.

Example Parameter value

Source for the ON/OFF1 command (control word 1, bit 0):
P554 (=22A Hex)
Change parameter value of index 1 to the value 3100.

	Parameter value (PWE)			
3rd word (PWE1)	Byte 5		Byte 4	
Bit No.:	15	8	7	0
HEX value	3	1	0	0

4th word (PWE2)	Byte 7		Byte 6	
Bit No.:	31	24	23	16
HEX value	0	0	0	0

Bits 8 to 15: Parameter value in the case of 16-bit parameter or low component in the case of 32-bit parameter

Bits 16 to 31: Value = 0 in the case of 16-bit parameter or high component in the case of 32-bit parameter

CAN identifiers for parameter processing

Two unambiguous CAN identifiers are needed for parameter processing, one for the PKW task and one for the PKW reply. In contrast to other protocols, the CAN protocol only recognizes identifiers and not node addresses. Practical experience shows, however, that it is useful to define node addresses here as well for reasons of clarity. For parameter processing, the individual CAN identifiers of the drive can thus be generated from the node address (P918 "CB bus address") and the basic identifier value (P711 / P696 "CB parameter 1").

NOTE

A parameter on a gray background is only valid for MASTERDRIVES with CU1, CU2 or CU3.

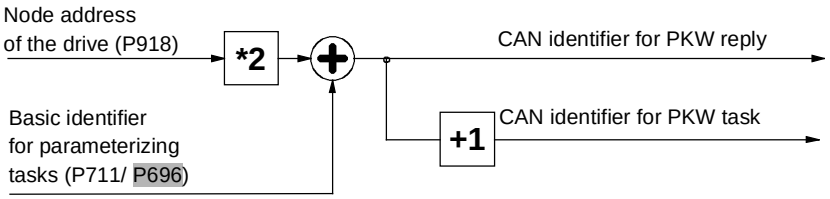

- CAN identifier for the parameter task (PKW task):
  (value in P711 / P696) + (value in P918)*2
- CAN identifier for the parameter reply (PKW reply):
  (value in P711 / P696) + (value in P918)*2 + 1

In addition to the PKW task, a PKW task broadcast is possible, i.e. a parameter task is simultaneously processed by all bus nodes. The CAN identifier for this is set in parameter P719 / P704 "CB parameter 9". The node address does not go in here as the task is to be processed by all slaves. The associated parameter reply is made with the regular CAN identifier for the PKW reply as described above.

Example

Parameter-value processing, i.e. the reading and writing of parameter values of the drives, is to take place in the whole CAN network, from identifier 1000 onwards.

Specification of the identifiers for PKW task and PKW reply:

Drive with node address 0:
1. P711 / P696 = 1000 (PKW basic identifier)
2. P918 = 0 (node address)
⇒ PKW task ID = 1000 PKW reply ID = 1001

Drive with node address 1:
1. P711 / P696 = 1000 (PKW basic identifier)
2. P918 = 1 (node address)
⇒ PKW task ID = 1002 PKW reply ID = 1003
and so on.

Rules for task/reply processing

- The length of the task or reply is always 4 words.
- The least significant byte (in the case of words) or the least significant word (in the case of double words) is always sent first.
- **One** task or **one** reply can only relate to **one** parameter value.
- The slave does not send the reply to a parameter task until the data are received from the MASTERDRIVES unit.
  During normal operation, this lasts 20 to 150 ms, depending on the type of MASTERDRIVES unit.
- In certain states of the converters (especially in initialization states), parameter processing is not carried out at all or only with a long delay. Here, a delay of up to 40 seconds can be expected for the reply.
- The master can only issue a new parameter task after receiving the reply to a previously issued task.
- The master identifies the reply to a task which has been set:
  - By evaluating the reply ID
  - By evaluating the parameter number, PNU
  - If necessary, by evaluating the parameter index, IND
  - If necessary, by evaluating the parameter value, PWE.
- The task must be sent complete in one telegram; telegrams with split tasks are not permissible. The same applies to the reply.

8.4.4.3 Process data area (PZD)

Control words and setpoints (tasks: master → converter) or status words and actual values (replies: converter → master) can be transferred by means of the process data.

The transferred process data only come into effect if the used bits of the control words, setpoints, status words and actual values have been routed (softwired) to the dual-port RAM interface.

For softwiring of the PZD, the number **i** of the process data (PZDi, i = 1 to 16) is entered in the connection value.

NOTE

The process-data connection as described here does not apply if a technology board has been mounted.

If a technology board (e.g. T300, T100) is used, the process-data connection is indicated the technology board manual.

Telegram: master → converter (Setpoint channel)	**PZD receive**															
	PZD 1 STW1	PZD 2 HSW	PZD 3	PZD 4	PZD 5	PZD 6	PZD 7	PZD 8	PZD 9	PZD 10	PZD 11	PZD 12	PZD 13	PZD 14	PZD 15	PZD 16
	1st word	2nd word	3rd word	4th word	5th word	6th word	7th word	8th word	9th word	10th word	11th word	12th word	13th word	14th word	15th word	16th word
Connectors for:																
16-bit process data	3001	3002	3003	3004	3005	3006	3007	3008	3009	3010	3011	3012	3013	3014	3015	3016
16-/32-bit PZDs	3001	3032		3034		3006	3037		3039		3041		3043		3045	
(Example)	3001	3032		3004	3005	3036		3038		3040		3042		3044		3016
See Section 8.4.5.2	3001	3002	3033		3035		3007	3038		3010	3041		3013	3044		3016

Telegram: converter → master (actual-value channel)	**PZD send**															
	PZD 1 ZSW	PZD 2 HIW	PZD 3	PZD 4	PZD 5	PZD 6	PZD 7	PZD 8	PZD 9	PZD 10	PZD 11	PZD 12	PZD 13	PZD 14	PZD 15	PZD 16
	1st word	2nd word	3rd word	4th word	5th word	6th word	7th word	8th word	9th word	10th word	11th word	12th word	13th word	14th word	15th word	16th word
Connectors for:																
Assignment of actual-value parameters in the case of 16-bit process data	P734 P694 i001	P734 P694 i002	P734 P694 i003	P734 P694 i004	P734 P694 i005	P734 P694 i006	P734 P694 i007	P734 P694 i008	P734 P694 i009	P734 P694 i010	P734 P694 i011	P734 P694 i012	P734 P694 i013	P734 P694 i014	P734 P694 i015	P734 P694 i016
16-/32-bit process data (examples)	P734 P694 i001	P734 P694 i002 = i003		P734 P694 i004= i005		P734 P694 i006	P734 P694 i007= i008		P734 P694 i009= i010		P734 P694 i011= i012		P734 P694 i013 = i014		P734 P694 i015	
See also Section 8.4.5.2	P734 P694 i001	P734 P694 i002	P734 P694 i003 = i004		P734 P694 i005 = i006		P734 P694 i007	P734 P694 i008= i009		P734 P694 i010	P734 P694 i011 = i012		P734 P694 i013	P734 P694 i014 = i015		P734 P694 i016

PZD: Process data
STW: Control word
ZSW: Status word
HSW: Main setpoint
HIW: Main actual value

Table 8.4-8 Permanently specified assignments and connectors

NOTE

A parameter on a gray background is only valid for MASTERDRIVES with CU1, CU2 or CU3.

CAN identifiers for process-data processing

Basic process-data processing consists of the two functions, "Receiving process-data" (PZD receive) and "Sending process-data" (PZD send). A total of 16 process-data words are possible from the MASTERDRIVES units, both in the receive and in the send direction. For each direction, therefore, a total of 4 CAN messages are needed because each individual CAN telegram can only transfer 4 process-data words. This means that 4 unambiguous CAN identifiers are needed both for PZD send and PZD receive. As in parameter processing, node addresses and a basic identifier are also defined in order to achieve better communication.

NOTE

A parameter on a gray background is only valid for MASTERDRIVES with CU1, CU2 or CU3.

PZD receive

For the PZD receive function, the same PZD-receive basic identifier is set for all units on the bus by means of CB parameter P712 / P697, "CB parameter 2". Unique identification is achieved by means of the node address in parameter P918, "CB bus address", which must be different for each bus node. A total of 4 CAN identifiers are assigned.

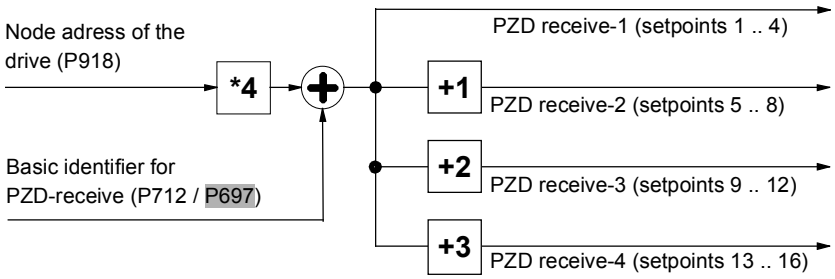

CAN identifier for the 1st PZD-receive CAN telegram (words 1 to 4):
(value in 712 / P697) + (value in P918)*4

CAN identifier for the 2nd PZD-receive CAN telegram (words 5 to 8):
(value in 712 / P697) + (value in P918)*4 + 1

CAN identifier for the 3rd PZD-receive CAN telegram (words 9 to 12):
(value in 712 / P697) + (value in P918)*4 + 2

CAN identifier for the 4th PZD-receive CAN telegram (words 13 to 16):
(value in 712 / P697) + (value in P918)*4 + 3

Example

PZD-receive processing, i.e. the receiving of control words and setpoints in the whole CAN network, is to take place from identifier 200 onwards. Control word 1 is received in the 1st word, a 32-bit main setpoint in the 2nd and 3rd words, control word 2 in the 4th word and an additional setpoint in the 5th word.

Specification of the identifiers for PZD receive:

Drive with node address 0:
1. P712 / P697 = 200 (PZD-receive basic identifier)
2. P918 = 0 (node address)
⇒ PZD-receive 1 = 200 PZD-receive 2 = 201
PZD-receive 3 = 202 PZD-receive 4 = 203

Drive with node address 1:
1. P712 / P697 = 200 (PZD-receive basic identifier)
2. P918 = 1 (node address)
⇒ PZD-receive 1 = 204 PZD-receive 2 = 205
PZD-receive 3 = 206 PZD-receive 4 = 207
and so on.

Connecting the setpoints in the drive:
P443.01 (Source of main setpoint) = 3032
P554.01 (Source of ON/OFF1) = 3100 / 3001 (use of control word 1)
P433.01 (Source of additional setpoint) = 3005

PZD-send

For PZD-send, the same PZD-send basic identifier is set for all units on the bus by means of CB parameter P713 / P698, "CB parameter 3". The number of CAN identifiers actually assigned and CAN telegrams sent depends on P714 / P699, "CB parameter 4", where the number of words to be sent (between 1 and 16) is specified.

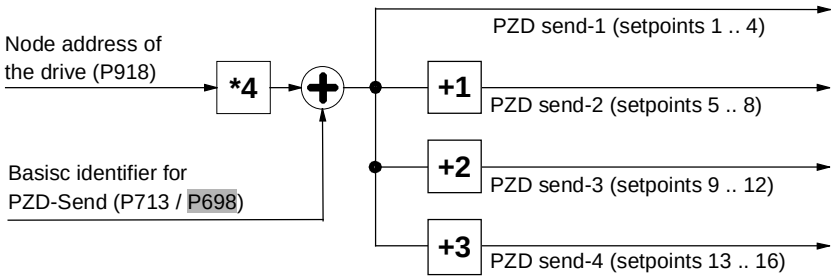

CAN identifier for the 1st PZD-send CAN telegram (words 1 to 4):
(value in P713 / P698) + (value in P918)*4

CAN identifier for the 2nd PZD-send CAN telegram (words 5 to 8):
(value in P713 / P698) + (value in P918)*4 + 1

CAN identifier for the 3rd PZD-send CAN telegram (words 9 to 12):
(value in P713 / P698) + (value in P918)*4 + 2

CAN identifier for the 4th PZD-send CAN telegram (words 13 to 16):
(value in P713 / P698) + (value in P918)*4 + 3

Example

PZD-send processing, i.e. the sending of status words and actual values, is to take place in the whole CAN network from identifier 100 onwards. Control word 1 is sent in the 1st word, the actual speed as a 32-bit value in the 2nd and 3rd words, status word 2 in the 4th word, the output voltage in the 5th word, the output current in the 6th word and the current torque in the 7th word.

Specification of the identifiers for PZD-send:

Drive with bus address 0:

1. P713 / P698 = 100 (PZD-send basic identifier)
2. P714 / P699 = 7 (number of actual values)
3. P918 = 0 (node address)

⇒ PZD-send 1 = 100 PZD-send 2 = 101
(PZD-send 3 = 102 PZD-send 4 = 103)

Drive with node address 1:

1. P713 / P698 = 100 (PZD-send basic identifier)
2. P714 / P699 = 7 (number of actual values)
3. P918 = 1 (node address)

⇒ PZD-send 1 = 104 PZD-send 2 = 105
(PZD-send 3 = 106 PZD-send 4 = 107)

and so on (PZD-send 3 and PZD-send 4 are not sent because the number of actual values (P714 / P699) is only 7)

Connection of the actual values in the drive:

P734.01 = 32 / P694.01 = 968 (status word 1)
P734.02 = 151/ P694.02 = 218 (main actual value as a 32-bit value ->)
P734.03 = 151/ P694.03 = 218 (same connector-/parameter numbers in 2 consecutive indices)
P734.04 = 33 / P694.04 = 553 (status word 2)
P734.05 = 189/ P694.05 = 3 (output voltage)
P734.06 = 168/ P694.06 = 4 (output current)
P734.07 = 241/ P694.07 = 5 (torque)

CAN identifiers for addition process-data functions

The PZD-receive-broadcast function is for simultaneously sending setpoints and control information from the master to all slaves on the bus. The CAN identifier must be the same for all slaves which use this function. This CAN identifier is entered by means of P716 / P701, "CB parameter 6".
The CAN identifier for the first PZD-receive-broadcast CAN telegram (words 1 to 4) then corresponds to the contents of P716 / P701.

- CAN identifier for the 1st PZD-receive-broadcast CAN telegram (words 1 to 4): **(value in P716 /** P701**)**
- CAN identifier for the 2nd PZD-receive-broadcast CAN telegram (words 5 to 8): **(value in P716 /** P701**) + 1**
- CAN identifier for the 3rd PZD-receive-broadcast CAN telegram (words 9 to 12): **(value in P716 /** P701**) + 2**
- CAN identifier for the 4th PZD-receive-broadcast CAN telegram (words 13 to 16): **(value in P716 /** P701**) + 3**

PZD-receive multicast

The PZD-receive-multicast function is for simultaneously sending setpoints and control information from the master to a group of slaves on the bus. The CAN identifier must be the same for all slaves within this group which use this function. This CAN identifier is entered by means of P717 / P702, "CB parameter 7". The CAN identifier for the first PZD-receive-multicast CAN telegram (words 1 to 4) then corresponds to the contents of P717 / P702.

- CAN identifier for the 1st PZD-receive-multicast CAN telegram (words 1 to 4): **(value in P717 /** P702**)**
- CAN identifier for the 2nd PZD-receive-multicast CAN telegram (words 5 to 8): **(value in P717 /** P702**) + 1**
- CAN identifier for the 3rd PZD-receive-multicast CAN telegram (words 9 to 12): **(value in P717 /** P702**) + 2**
- CAN identifier for the 4th PZD-receive-multicast CAN telegram (words 13 to 16): **(value in P717 /** P702**) + 3**

PZD-receive cross

The PZD-receive-cross function is for receiving setpoints and control information from another slave. With this function, process data can be exchanged between the drives without a CAN-bus master being present. The CAN identifier of PZD-receive cross for the receiving slave must be matched to the CAN identifier of PZD-send of the slave which is sending. This CAN identifier is entered by means of P718 / P703, "CB parameter 8". The CAN identifier for the first PZD-receive-cross telegram (words 1 to 4) then corresponds to the contents of P718 / P703.

- CAN identifier for the 1st PZD-receive-cross CAN telegram (words 1 to 4): **(value in P718 /** P703**)**
- CAN identifier for the 2nd PZD-receive-cross CAN telegram (words 5 to 8): **(value in P718 /** P703**) + 1**
- CAN identifier for the 3rd PZD-receive-cross CAN telegram (words 9 to 12): **(value in P718 /** P703**) + 2**
- CAN identifier for the 4th PZD-receive-cross CAN telegram (words 13 to 16): **(value in P718 /** P703**) + 3**

Notes and rules for process-data processing

- The least significant byte (in the case of words) or the least significant word (in the case of double words) is always sent first.
- **Control word 1** must always be contained in the 1st word of the received setpoints. If control word 2 is needed, this must be in the 4th word.
- **Bit 10 "Control of drive unit"** must always be set in control word 1, otherwise the new setpoints and control words are not accepted by the converter.
- The **consistency of the process data** is only ensured within the data of a CAN telegram. If more than four words are needed, they must be split up among several CAN telegrams because only four words can be transferred in a CAN telegram. Because the converter scans the setpoints asynchronously to telegram transfer, it may happen that the first CAN telegram is accepted by the current transfer cycle whereas the second CAN telegram still originates from the old transfer cycle. Related setpoints, therefore, should always be transferred in the same CAN telegram. If this is not possible due to the peculiarities of the installation, consistency can still be ensured by means of bit 10 "Control of drive unit". To do this, a CAN telegram is first sent in which bit 10 of the control word has been deleted. As a result, the setpoints are no longer accepted by the converter. All the CAN telegrams still needed are then sent. Finally, another CAN telegram is sent in which bit 10 of the control word has been set. As a result, all setpoints and control words are accepted in the converter at the same time.
- The described process-data functions for receiving setpoints and control words (PZD receive, PZD-receive broadcast, PZD-receive multicast and PZD-receive cross) can be used simultaneously. The transferred data overlap each other in the converter, i.e. the 1st word in the CAN telegrams PZD-receive 1, PZD-receive broadcast 1, PZD-receive multicast 1 and PZD-receive cross 1 is always interpreted in the converter as the same control word 1. The best way of combining these possibilities depends on the concrete application.

DANGER

When you change the initialization function of software version V1.3x to V1.40 and higher, or VC firmware from 3.22 to 3.23 and higher, the behavior of the converter also changes (reverting to the behavior of software versions V1.2x and lower again) as follows:

If the electronics supply is switched off on a converter that is in state "READY" and is connected to an automation system via a field bus (PROFIBUS, CAN, DEVICE-NET, or CC-Link), this causes a fault message for this converter in the automation system.
If the automation system nevertheless sends a control word STW1 with valid authorization (bit 10 = 1) and a pending ON command (bit 0 = 1) to this converter, this can cause the converter to switch on and go straight into "OPERATION" state when the electronics supply is connected at the converter.

8.4.5 Start-up of the CBC

NOTE

Please note the basic parameter differences (described below) to units with the old function classes FC (CU1), VC (CU2) and SC (CU3). These parameter numbers are printed on a dark gray background for purposes of distinction.

8.4.5.1 Basic parameterization of the units

Basic parameterization for MASTERDRIVES with CUMC or CUVC

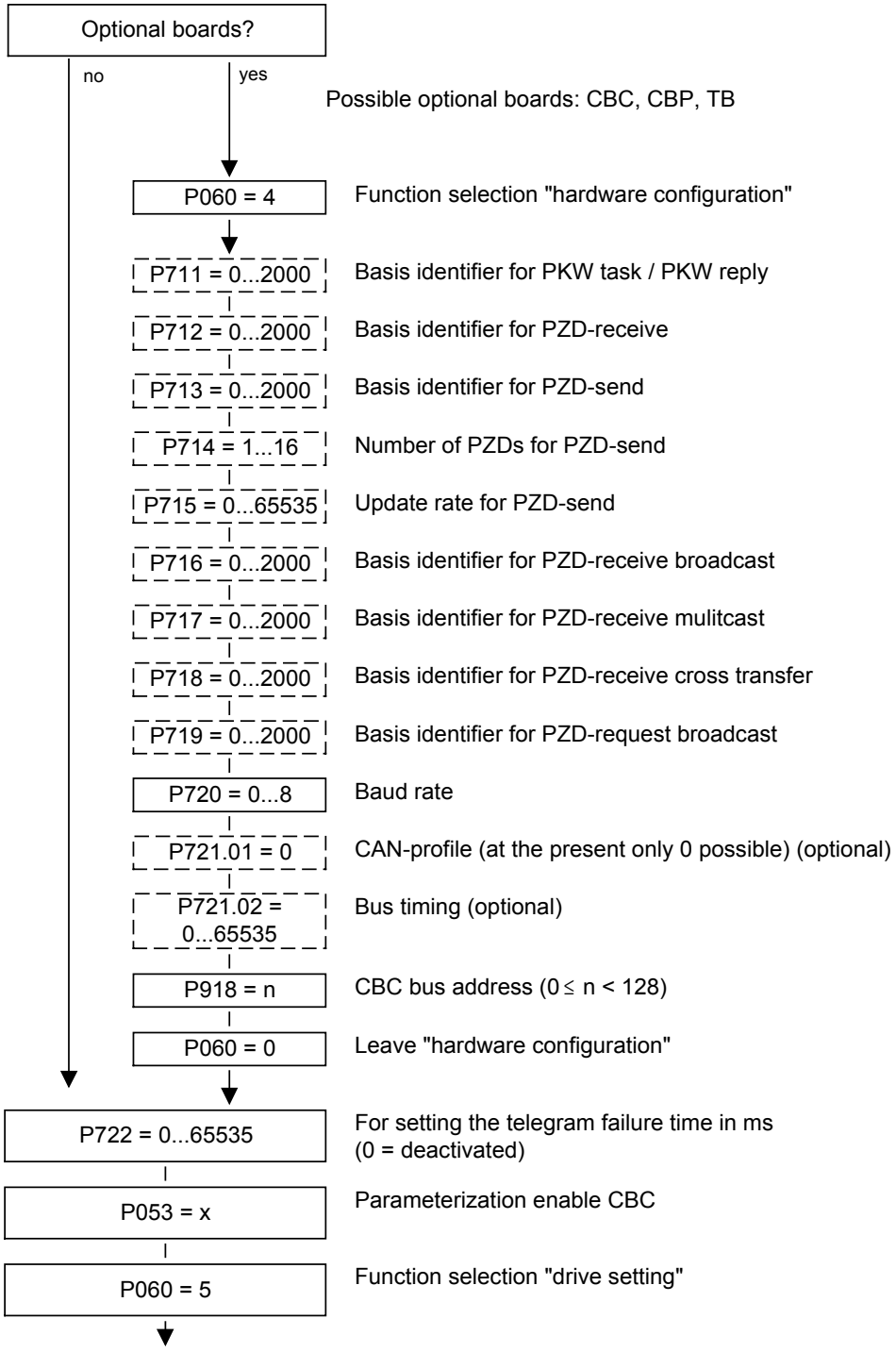

Fig. 8.4-16 Parameterization of the "hardware configuration" for MASTERDRIVES with CUMC or CUVC

Basic parameterization for MASTERDRIVES with CU1, CU2 or CU3

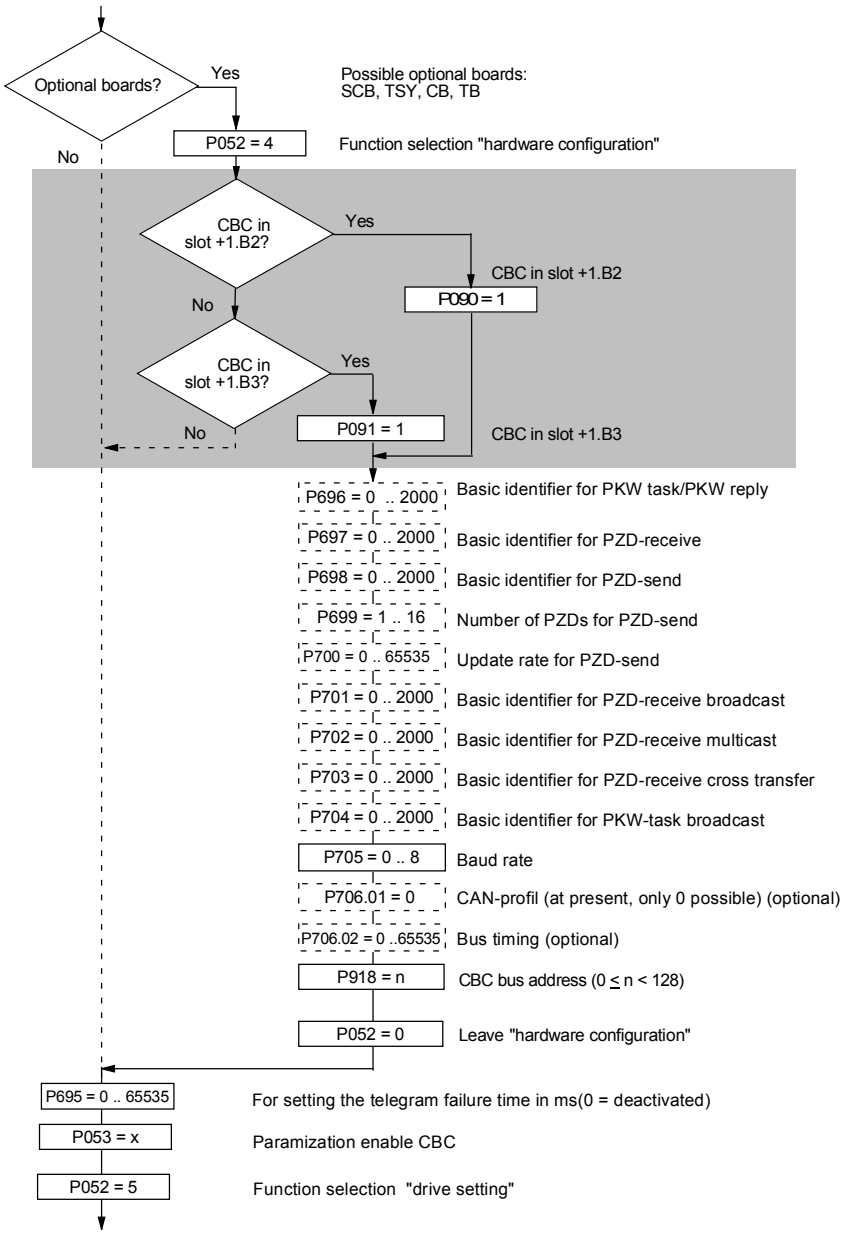

Fig. 8.4-17 Parameterization of the "hardware configuration" for MASTERDRIVES with CU1, CU2 or CU3

P053 (parameterizing enable)
This parameter is significant for the CBC if you wish to set or change parameters of the converter (incl. technology) by means of parameterizing tasks (PKW task or PKW-request broadcast). In this case, set parameter P053 (see also the parameter list in the instruction manual of the converter) to an odd value (e.g. 1, 3, 7 etc.). With parameter P053, you specify the positions (PMU, CBC etc.) from which it is permissible to change parameters. E.g.: P053 = 1: Parameterizing enable only CBC = 3: Parameterizing enable CBC+PMU = 7: Parameterizing enable CBC+PMU+SCom1 (OP) If the parameter change (= parameterizing enable) is enabled via the CBC (P053 = 1, 3 etc.), all further parameters can be set from the CAN-bus master via the bus. For further setting of parameters which concern data transfer via the CAN bus (e.g. process-data connection (softwiring)), you must know the number of process-data words received from the slave.

P060	**P052**
Function selection "Hardware setting"	

P090 (board slot 2) or P091 (board slot 3)
You can alter these parameters even when the CBC is exchanging net data via the CAN bus. You can thus parameterize the CAN-bus interface away from the converter. In this case, the CBC ceases communication via the bus and neither receives nor sends CAN data telegrams.

P711 (CB parameter 1)	P696 (CB parameter 1)

Basic identifier for PKW task (parameter task)
With this parameter, the basic identifier can be set for a PKW task (parameter task). The actual CAN identifier for a PKW task is calculated from this parameter and the node address (P918) according to the following equation:

(Parameter value of P711/ P696) + (Parameter value of P918)*2

The CAN identifier for a PKW reply (parameter reply) is the number subsequent to this, namely

(Parameter value of P711/ P696) + (Parameter value of P918) *2 + 1

With the value 0 (pre-assigned) in this parameter, parameterization via the CAN bus is deactivated.

If the calculated CAN identifier for the PKW task or PKW reply is outside the valid range (1 to 2000) or if it overlaps another CAN identifier, error F080 appears when status 4 "hardware configuration" is left. After acknowledgement of the error, you are in the "hardware configuration" status again and can correct the incorrect parameterization.

Example:
The basic identifier for parameterization in P711 / P696 is set to 1500. The node address in P918 is 50. The CAN identifier is thus 1500 + 50*2 = 1600 for a PKW task and 1601 for a PKW reply.

P712 (CB parameter 2)	P697 (CB parameter 2)

Basic identifier for PZD receive (receiving process data)
With this parameter, the basic identifier for PZD receive (receive process data = setpoints / control words) can be set. The actual CAN identifier for PZD receive is calculated from this parameter and the node address (P918) according to the following equation:

(Parameter value of P712 / P697) + (Parameter value of P918)*4

Because only four setpoints (= 8 bytes) can be transferred with a CAN data telegram but sixteen setpoints are supported by MASTERDRIVES units, a total of four CAN data telegrams with four CAN identifiers are needed for transferring setpoints. The following three CAN identifiers are therefore also provided for PZD receive. The following table applies:

Contents	CAN identifier
Control word 1 / Setpoint 2 / Setpoint 3 / Setpoint 4 or Control word 2	P712/P697 + P918*4
Setpoint 5 to Setpoint 8	P712/P697 + P918*4 + 1
Setpoint 9 to Setpoint 12	P712/P697 + P918*4 + 2
Setpoint 13 to Setpoint 16	P712/P697 + P918*4 + 3

With the value 0 (pre-assigned) in this parameter, PZD receive is deactivated.

If the calculated CAN identifier for PZD receive is outside the valid range (1 to 2000) or if it overlaps another CAN identifier, error F080 appears when status 4 (hardware configuration) is left. After acknowledgement of the error, you are in the "hardware configuration" status again and can correct the incorrect parameterization.

Example:
The basic identifier for PZD receive in P712 / P697 is set to 500. The node address in P918 is 50. This results in a CAN identifier of 500 + 50*4 = 700 for the first CAN data telegram of PZD receive. The further CAN data telegrams for PZD receive have CAN identifiers 701 to 703.

P713 (CB parameter 3)	P698 (CB parameter 3)

Basic identifier for PZD-send (sending process data)
With this parameter, the basic identifier for PZD-send (sending process data = status words / actual values) can be set. The actual CAN identifier for PZD-send is calculated from this parameter and the node address (P918) according to the following equation:

(Parameter value of P713 / P698) + (Parameter value of P918)*4

Because only four actual values (= 8 bytes) can be transferred with a CAN data telegram but sixteen actual values are supported by MASTERDRIVES units, a total of four CAN data telegrams with four CAN identifiers are needed for transferring the actual values. The following table applies:

Contents	CAN identifier
Status word 1 / Actual value 2 / Actual value 3 / Actual value 4 or Status word 2	**P713/P698 + P918*4**
Actual value 5 to Actual value 8	**P713/P698 + P918*4 + 1**
Actual value 9 to Actual value 12	**P713/P698 + P918*4 + 2**
Actual value 13 to Actual value 16	**P713/P698 + P918*4 + 3**

With the value 0 (pre-assigned) in this parameter, PZD-send is deactivated.

If the calculated CAN identifier for PZD-send is outside the valid range (1 to 2000) or if it overlaps another CAN identifier, the error F080 appears when status 4 "hardware configuration" is left. After acknowledgement of the error, you are in the "hardware configuration" status again and can correct the incorrect parameterization.

Which values are sent is specified in parameters P713.01 / P694.01 to P713.16 / P694.16 by entering the relevant parameter numbers.

Exemple:
The basic identifier for PZD-send in P713 / P698 is set to 200. The node address in P918 is 50. This results in a CAN identifier of 200 + 50*4 = 400 for the first CAN data telegram of PZD-send. The further CAN data telegrams for PZD-send have CAN identifiers 401 to 403.

P714 (CB parameter 4)	P699 (CB parameter 4)

Number of process data to be sent in the case of PZD-send
With this parameter, the number of process data to be sent in the case of PZD-send is specified. Valid values are 1 to 16 words. From this information, the actual number and the length of the CAN data telegrams are determined.

If the number of process data is outside the valid range (1 to 16), error F080 appears when status 4 "hardware configuration" is left. After acknowledgement of the error, you are in the "hardware configuration" status again and can correct the incorrect parameterization.

Example:
The basic identifier for PZD-send in P713 / P698 is set to 200. The node address in P918 is 50. This results in a CAN identifier of 200 + 50*4 = 400 for the first CAN data telegram of PZD-send. If the number of process data (P714 / P699) is now 10, a CAN data telegram with four words with CAN identifier 400 and a telegram with CAN identifier 401 is sent as is a CAN data telegram with two words and CAN identifier 402. These are the entered 10 words of process data. CAN identifier 403 is unused and is not sent.

P715 (CB parameter 5)	P700 (CB parameter 5)

Up-date rate for PZD-send
With this parameter, the up-date rate is set in milliseconds for PZD-send, i.e. the time base in which new actual values are to be sent from the unit.

Meaning of the parameter values:

- 0: Actual values are only sent on request (remote transmission requests).
- 1 to 65534: Actual values are sent according to the time set in ms or on request (Remote Transmission Requests).

65535: Actual values are sent if the values have changed (event) or on request (remote transmission requests). This function should only be used if the values to be transferred only rarely change because, otherwise, the bus load becomes very high.

P716 (CB parameter 6)	P701 (CB parameter 6)

CAN identifier for PZD-receive broadcast
With this parameter, the CAN identifier for PZD-receive broadcast (receiving process data = setpoints / control words) can be set. A broadcast telegram is to be received by all slaves on the bus. This parameter must be set the same for all slaves.

Because only four setpoints (= 8 bytes) can be sent with a CAN data telegram but 16 setpoints are supported by MASTERDRIVES units, a total of four CAN data telegrams with four CAN identifiers are needed for transferring the setpoints. The following three CAN identifiers are therefore also provided for PZD-receive broadcast. The following table applies:

Contents	CAN identifier
Control word 1 / Setpoint 2 / Setpoint 3 / Setpoint 4 or Control word 2	**P716/**P701
Setpoint 5 to Setpoint 8	**P716/**P701 **+ 1**
Setpoint 9 to Setpoint 12	**P716/**P701 **+ 2**
Setpoint 13 to Setpoint 16	**P716/**P701 **+ 3**

With the value 0 (pre-assigned) in this parameter, PZD-receive broadcast is deactivated.

If the calculated CAN identifier for PZD-receive broadcast is outside the valid range (1 to 2000) or if it overlaps another CAN identifier, error F080 appears when status 4 "hardware configuration" is left. After acknowledgement of the error, you are in the "hardware configuration" status again and can correct the incorrect parameterization.

Example:
The CAN identifier for PZD-receive broadcast in P716 / P701 is set to 100. This results in a CAN identifier of 100 for the first CAN data telegram of PZD-receive broadcast. The further CAN data telegrams for PZD-receive broadcast have CAN identifiers 101 to 103.

P717 (CB parameter 7)	P702 (CB parameter 7)

CAN identifier for PZD-receive multicast
With this parameter, the CAN identifier for PZD-receive multicast (receiving process data = setpoints / control words) can be set. A multicast telegram is to be received by a group of slaves on the bus. This parameter must be set the same for all slaves in this group.

Because only four setpoints (= 8 bytes) can be transferred with one CAN data telegram but 16 setpoints are supported by MASTERDRIVES units, a total of four CAN data telegrams with four CAN identifiers are needed for transferring the setpoints. The following three CAN identifiers are therefore also provided for PZD-receive multicast. The following table applies:

Contents	CAN identifier
Control word 1 / Setpoint 2 / Setpoint 3 / Setpoint 4 or Control word 2	**P717/**P702
Setpoint 5 to Setpoint 8	**P717/**P702 **+ 1**
Setpoint 9 to Setpoint 12	**P717/**P702 **+ 2**
Setpoint 13 to Setpoint 16	**P717/**P702 **+ 3**

With the value 0 (pre-assigned) in this parameter, PZD-receive multicast is deactivated.

If the CAN identifiers for PZD-receive multicast are outside the valid range (1 to 2000) or if they overlap another CAN identifier, error F080 appears when status 4 "hardware configuration" is left. After acknowledgement of the error, you are in the "hardware configuration" status again and can correct the incorrect parameterization.

Example:
The CAN identifier for PZD-receive multicast in P717 / P702 is set to 50. This results in a CAN identifier of 50 for the first CAN data telegram of PZD-receive multicast. The further CAD data telegrams for PZD-receive multicast have CAN identifiers 51 to 53.

P718 (CB parameter 8)	P703 (CB parameter 8)

CAN identifier for PZD-receive cross
With this parameter, the CAN identifier for PZD-receive cross (receiving process data = setpoints / control words) can be set. By means of cross data traffic between slaves, the actual values sent by a slave (by means of PZD-send) can be used as setpoints by another slave. For this, the parameter value of this parameter is set to the CAN identifier of the CAN data telegram from which the setpoints are to be obtained.

Because only four setpoints (= 8 bytes) can be transferred with one CAN data telegram but 16 setpoints are supported by MASTERDRIVES units, a total of four CAN data telegrams with four CAN identifiers are needed for transferring the setpoints. The following three CAN identifiers are therefore also provided for PZD-receive cross. The following table applies:

Contents	CAN identifier
Control word 1 / Setpoint 2 / Setpoint 3 / Setpoint 4 or Control word 2	**P718/**P703
Setpoint 5 to Setpoint 8	**P718/**P703 **+ 1**
Setpoint 9 to Setpoint 12	**P718/**P703 **+ 2**
Setpoint 13 to Setpoint 16	**P718/**P703 **+ 3**

With the value 0 (pre-assigned) in this parameter, PZD-receive cross is deactivated.

If the CAN identifiers for PZD-receive cross are outside the valid range (1 to 2000) or if they overlap another CAN identifier, error F080 appears when status 4 "hardware configuration" is left. After acknowledgement of the error, you are in the "hardware configuration" status again and can correct the incorrect parameterization.

Example:
The data telegram with CAN identifier 701 is to be used as setpoint 5 to setpoint 8. For this, the CAN identifier for PZD-receive cross in P718 / P703 must be set to 700. This results in a CAN identifier of 700 for the first CAN data telegram of PZD-receive cross. The further CAN data telegrams have CAN identifiers 701 to 703, i.e. the data telegram 701 results in setpoint 5 to setpoint 8.

P719 (CB parameter 9)	P704 (CB parameter 9)

CAN identifier for PKW-task broadcast
With this parameter, the CAN identifier for PKW-task broadcast (parameter task) can be set. A broadcast telegram is to be received by all slaves on the bus. This parameter must therefore be set the same for all slaves. With the help of this function, a parameter task can be simultaneously issued to all slaves on the bus.

The parameter reply is given with the CAN identifier of the PKW-reply (see P711 / P696), namely

(Parameter value of P711 / P696) + (Parameter value of P918)*2 + 1

With the value 0 (pre-assigned) in this parameter, PKW-task broadcast is deactivated.

If the calculated CAN identifier for PKW-task broadcast is outside the valid range (1 to 2000) or if it overlaps another CAN identifier, error F080 appears when status 4 "hardware configuration" is left. After acknowledgements of the error, you are in the "hardware configuration" status again and can correct the incorrect parameterization.

Example:
The basic identifier for parameterization in P711 / P696 is set to 1500. The node address in P918 is 50. This results in a CAN identifier of 1500 + 50*2 = 1600 for PKW-task and 1601 for PKW-reply. The CAN identifier for PKW-reply broadcast in P719 / P704 is set to 1900. A parameter task can be issued by means of PKW-task broadcast, namely with CAN identifier 1900, whereas the reply is given with CAN identifier 1601 by means of PKW-reply.

P720 (CB parameter 10)	P705 (CB parameter 10)

Baud rate of the slave on the CAN bus
With this parameter, the baud rate of the slave on the CAN bus is set. The following applies:

If the baud rate is outside the valid range, error F080 appears when status 4 "hardware configuration" is left. After acknowledgement of the error, you are in the "hardware configuration" status again and can correct the incorrect parameterization.

Parameter value	0	1	2	3	4	5	6	7	8
Baud rate [kBit/s]	10	20	50	100	125	250	500	800	1000

P721 (CB parameter 11)	P706 (CB parameter 11)

Special CAN bus settings
This parameter is only present in MASTERDRIVES units from the following software versions onwards:

MASTERDRIVES	Software version
SIMOVERT MASTERDRIVES MC	≥ 1.0
SIMOVERT MASTERDRIVES FC	≥ 1.3
SIMOVERT MASTERDRIVES VC	≥ 1.3
SIMOVERT MASTERDRIVES SC	≥ 1.2
SIMOVERT MASTERDRIVES E/R	≥ 3.1
SIMOVERT MASTERDRIVES AFE	≥ 1.0

- **Index i001:** With this parameter, different CAN profiles can be set in future. At the present time, only the value 0 (pre-assigned) is valid.
- **Index i002:** With this parameter, the bus timing on the CAN bus can be influenced. With the value 0 (pre-assigned), the internal setting resulting from the baud rate is made. All other values are directly set without a plausibility check.

This parameter should generally be allowed to keep its pre-assigned setting of 0!

Meaning of the parameter-value bits:

Bit0 - Bit5: BRP (Baud rate prescaler).
Bit6 - Bit7: SJW SJW (Synchronization Jump Width). Maximum shortening or lengthening of a bit time by means of resynchronization.
Bit8 - Bit11: TSEG1 (Time Segment 1). Time intervals before the scanning time. Valid values are 2 to 15.
Bit12 - Bit14: TSEG2 (Time Segment 2). Time interval after the scanning time. Valid values are 1 to 7. In addition TSEG2 must be greater than SJW.
Bit 15: Not assigned

Internal standard pre-assignments of the bus timing, depending on the baud rate:

Baud rate	BRP	SJW	TSEG1	TSEG2	Hex value
10 kBit (P720/P705 = 0)	39	2	15	2	2FA7
20 kBit (P720/P705 = 1)	19	2	15	2	2F93
50 kBit (P720/P705 = 2)	7	2	15	2	2F87
100 kBit (P720/P705 = 3)	3	2	15	2	2F83
125 kBit (P720/P705 = 4)	3	1	12	1	1C43
250 kBit (P720/P705 = 5)	1	1	12	1	1C41
500 kBit (P720/P705 = 6)	0	1	12	1	1C40
800 kBit (P720/P705 = 7)	0	1	6	1	1640
1 MBit (P720/P706 = 8)	0	1	4	1	1440

P721 (CB parameter 11)	P706 (CB parameter 11)
Formula for calculating the baud rate from the constants: time quantum = tq = (BRP+1) * 2 * tClk Clock Period = tClk = 62.5 ns (at 16 MHz) Synchronization segment = tSync-Seg = tq Time Segment 1 (before scanning time) = tTSeg1 = (TSEG1+1)*tq Time Segment 2 (after scanning time) = tTSeg2 = (TSEG2+1)*tq Bit time = tSync-Seg + tTSeg1 + tTSeg2 Baud rate = 1 / bit time The parameter value corresponds to the value of the bit timing register of the CAN component. A more exact description of this bit timing register can be found in the manual of the CAN module of the C167CR or in the manual of the component, INTEL 82527 (extended CAN).	

P918.1 (CBC bus address)	P918 (CBC bus address)
Here, the node address of the unit on the CAN bus is set. It is included in the calculation of the CAN identifier for parameter tasks and replies (PKW task / PKW reply) and process data (PZD-receive / PZD-send). (See also P711 / P696, P712 / P697 and P713 / P698).	

NOTE

When the above settings have been made, the CBC is regarded as registered in the converter and is ready for communication via the CAN bus.
Changing parameters or specifying process data via the CAN bus is not yet possible after this step.
Parameterization must first be enabled and the process data still have to be softwired in the converter.

8.4.5.2 Process-data softwiring in the units

Definition

Process data interconnection involves the linking up of setpoints and control bits to the RAM interface. The transferred process data only become effective when the used bits of the control words as well as the setpoints, status words and actual values are allocated (connected) to the dual-port RAM interface.

The received process data are stored by the CBC at fixed, pre-defined addresses in the dual-port RAM. A connector (e.g. 3001 for PZD1) is assigned to each item of process data (PZDi, i = 1 to 10). The connector also determines whether the corresponding PDZi (i = 1 to 10) is a 16-bit value or a 32-bit value.

With the help of selector switches (e.g. P554.1 = selector switch for bit 0 of control word 1), the setpoints or the individual bits of the control words can be assigned to a particular PZDi in the dual-port RAM. In order to do this, the connector belonging to the required PZDi is assigned to the selector switch.

NOTE

In function classes CUMV, CUVC and Compact PLUS, the control words STW1 and STW2 are also available in bit form on so-called binectors (explanations of BICO systems can be found in Chapter 4 "Function Blocks and Parameters").

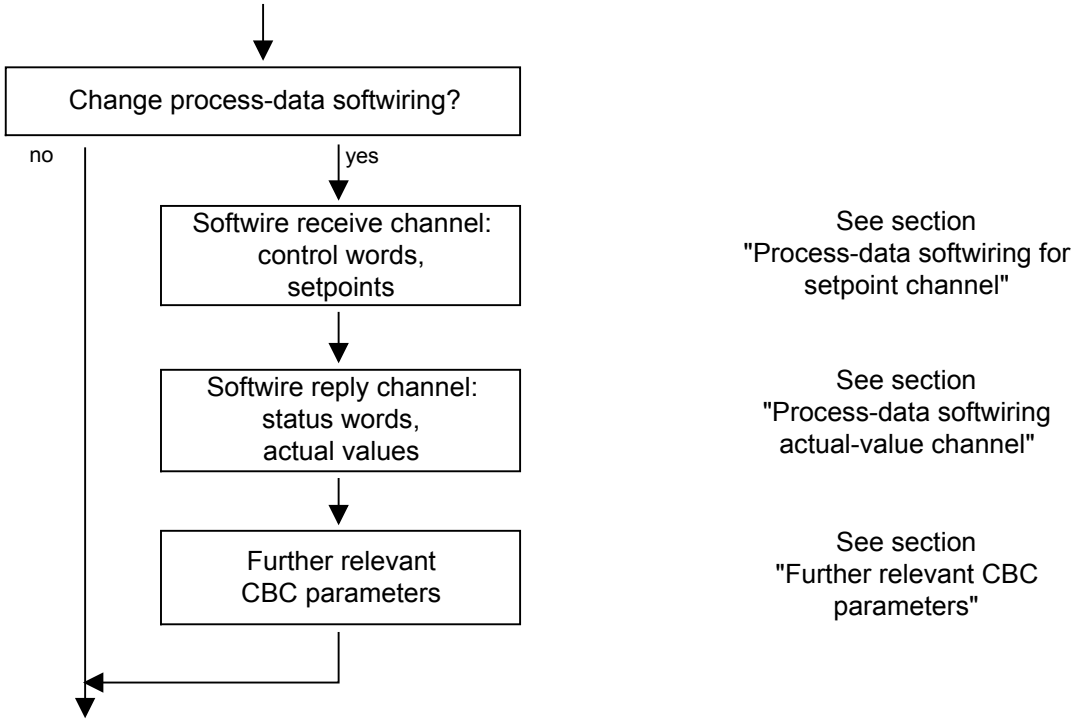

Fig. 8.4-18 Procedure for altering process data

Example

On the following pages, you will find examples of how the transferred data are routed in the units by means of process-data softwiring (logical connection).

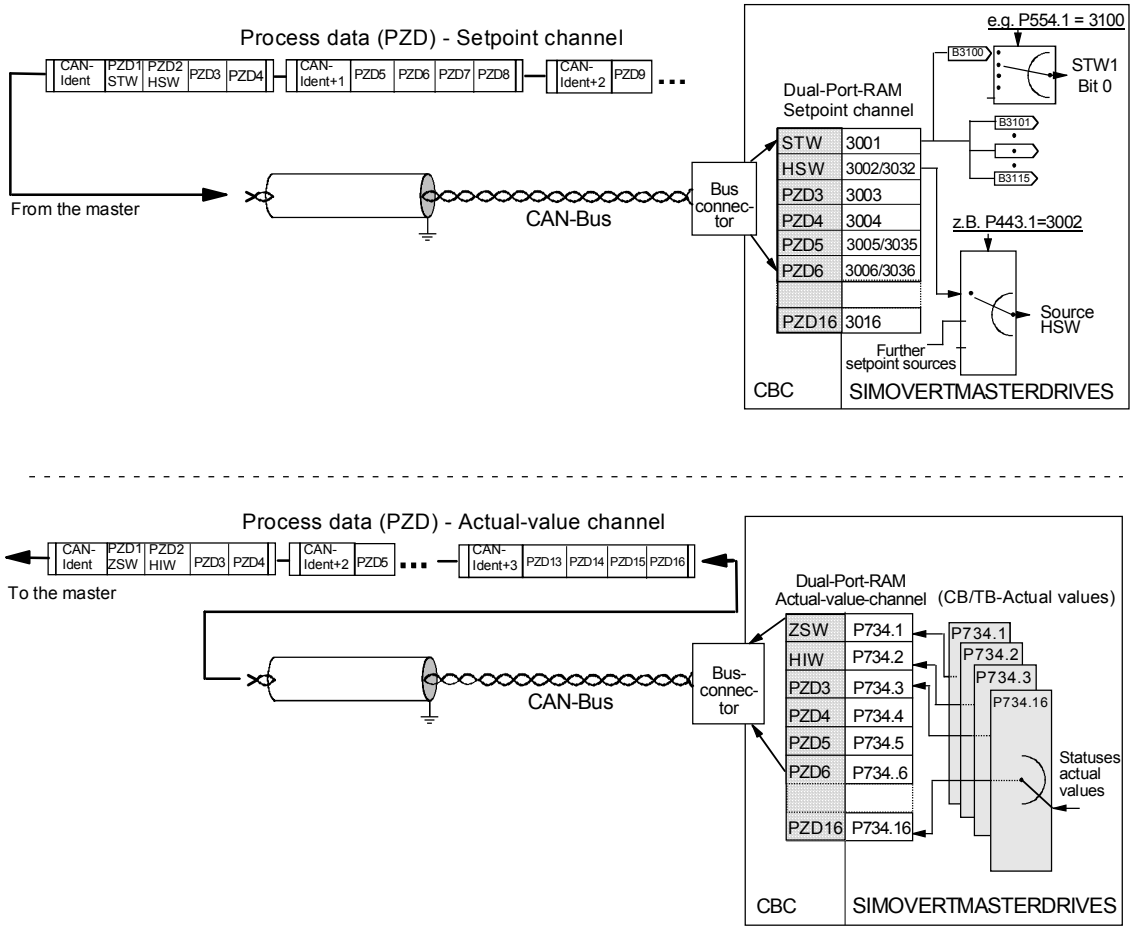

Fig. 8.4-19 Example of process-data connection for function classes CUMC and CUVC

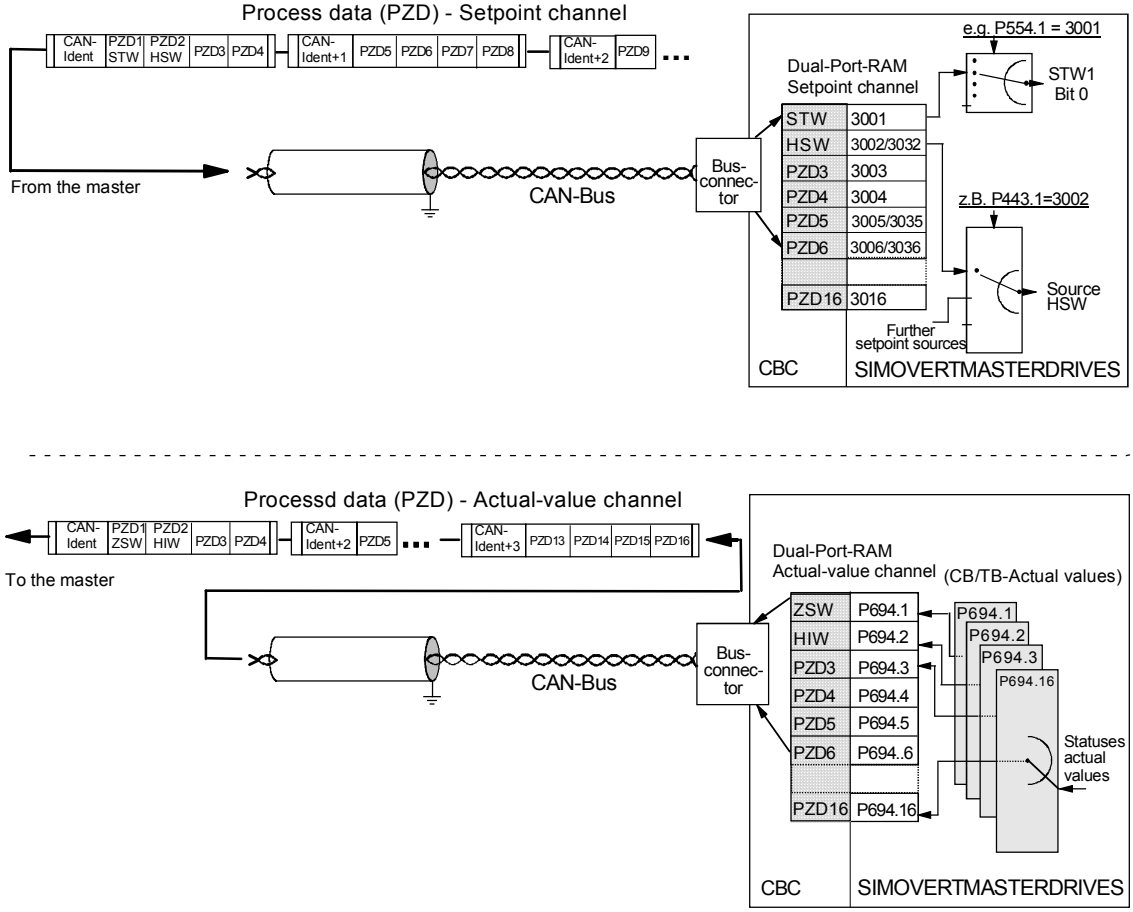

Fig. 8.4-20 Example of process-data interconnection for function classes CU1, CU2 or CU3

Process-data connection - Setpoint channel

- The "tens digit" of the binector enables a distinction to be made between a 16-bit item of process data (e.g. 3002) and a 32-bit item of process data (e.g. 3032).
- If an item of process data is transferred as a 16-bit quantity, you must assign the connector which belongs to the desired PZDi and which is for a 16-bit item of process data (e.g. if PZD2 is assigned a 16-bit item of process data, the relevant connector is 3002) to the selection switch (see section "Process data" in the instruction manual of the converter).
- If an item of process data is transferred as a 32-bit quantity, you must assign the connector which belongs to the desired PZDi and which is for a 32-bit item of process data (e.g. if PZD2+PZD3 are assigned a 32-bit item of process data, the relevant connector is 3032) to the selection switch (see section "Process data" in the instruction manual of the converter).
- The first word (relevant connector: 3001) of the received process data is always allocated to control word 1 (STW1). The meaning of the control-word bits is given in the operating instructions for the converter in the section, "Start-up aids".
- The second word is always allocated to the main setpoint (HSW). If the main setpoint is transferred as a 32-bit item of process data, it also occupies word 3. In this case, the most significant component is transferred in word 2 and the least significant component in word 3.
- If a control word 2 (STW2) is transferred, the fourth word (relevant connector = 3004) is always allocated to STW2. The meaning of the control-word bits is given in the instruction manual for the converter in the section, "Start-up aids".
- The connector is always a four-digit number. The connectors assigned to the process data (PZD1 to PZD16) are given in the function plan.
- The connector is entered at the PMU as a 4-digit number (e.g. 3001). During parameterization via the CAN bus, the connector is entered via the bus in the same way as via the PMU (e.g. connector 3001 is transferred as 3001(hex)).

NOTE

Process-data connection (softwiring) of the setpoint channel can also be carried out via the CAN bus as long as P053 has previously been set to an odd number.

Example for the setpoint channel

PZD connection for the bits of control word 1 (STW1) and of the main setpoint (HSW) and the bits of control word 2 (STW2).

At the converter via the PMU		Meaning
P*554*.1 = 3100	P*554*.1 = 3001	Control word 1 bit 0 (Source ON/OFF1) via DPR interface (word 1)
P*555*.1 = 3101	P*555*.1 = 3001	Control word 1 bit 1 (Source ON/OFF2) via DPR interface (word 1)
P*443*.1 = 3002	P*443*.1 = 3002	16-bit main setpoint (Source main setpoint) via DPR interface (word 2)
P*588*.1 = 3412	P*588*.1 = 3004	Control word 2 bit 28 (Src no ext. alarm1) via DPR interface (word 4)

Based on the factory setting of the converter, the above example of parameterization represents a functioning method of connecting (softwiring) the process data (setpoints).

Italics:

Parameter number (for the PMU as a decimal number; via the CAN bus as an equivalent HEX number).

Single underline:

Index (for the PMU as a decimal number, via the CAN bus as an equivalent HEX number).

Double underline:

Connector: defines whether the parameter selected by means of the *parameter number* is transferred as a 16-bit value or as a 32-bit value and at which position in the PZD setpoint telegram (PZDi) the parameter is transferred.

- White background = MASTERDRIVES, CUMC or CUVC
- Grey background = MASTERDRIVES FC (CU1), VC (CU 2) or SC (CU 3)

Process-data connection - Actual-value channel

The actual-value process data (PZDi, i = 1 to 16) are assigned to the corresponding status words and actual values by means of the indexed parameter P734.i / P694.i (CB/TB actual values). Each index stands for an item of process data (e.g. B. 5 → PZD5 and so on). Please enter the number of the parameter - whose value you wish to transfer with the corresponding process data - in parameter P734.i / P694.i (see also "Parameter list") under the relevant index.

The status word should be entered in the PZD1 word of the PZD reply (actual-value channel) and the main actual value in the PZD2 word. Further assignment of the PZDs (PZD1 to PZD16, if necessary) is not defined. If the main actual value is sendted as a 32-bit value, it is assigned to PZD2 and PZD3.

The meaning of the status-word bits can be found in the operating instructions of the converter in the section "Start-up aids".

Example for the actual-value channel

PZD connection for status word 1 (ZSW1), the main actual value (HIW) and status word 2 (ZSW2)

At the converter via the PMU		Meaning
P*734*.1 = 32	P*694*.1 = 968	Status word 1 (K032 / P968) is transferred in the actual-value channel by means of PZD1.
P*734*.2 = 151	P*694*.2 = 218	The actual speed n/f (KK151 / P218) is transferred in the actual-value channel by means of PZD2 (here as a 16-bit quantity; PZD3 not occupied here).
P*734*.4 = 33	P*694*.4 = 553	Status word 2 (K033 / P553) is transferred in the actual-value channel by means of PZD4.

Example: 32-bit main actual value

P*734*.2 = 151	P*694*.2 = 218	The actual speed n/f (KK151 / P218) is transferred in the actual-value channel by means of PZD2 ...
P*734*.3 = 151	P*694*.3 = 218	... and by means of PZD3 as a 32-bit value.

Italics:
P734 / P694 (CB/TB actual values), for the PMU, shown as a decimal number; via the CAN bus, transferred as an equivalent HEX number (2B6 Hex).

Single underline:
Index (for the PMU, as a decimal number; via the CAN bus, as an equivalent HEX number). Specifies at which position in the PZD actual-value telegram (PZDi) the actual value selected by means of the parameter number is to be transferred.

Double underline:
Parameter number of the desired actual value.

- White background = MASTERDRIVES, CUMC or CUVC
- Grey background = MASTERDRIVES FC (CU1), VC (CU 2) or SC (CU 3)

NOTE

If actual values are sent as a 32-bit datum, you must enter the associated connector number at two consecutive words (indices).

Other relevant CBC parameters

P722 (CB/TB TlgOFF)	P695 (CB/TB TlgOFF)

Telegram failure time
With parameter P722 / P695 (see also operating instructions of the converter, section "Parameter list"), you can specify whether the entry of process data into the dual-port RAM by the CBC is to be monitored by the converter. The parameter value of this parameter corresponds to the telegram failure time in ms. The pre-assigned value of this parameter is 10 ms, i.e. there must be a maximum of 10 ms between two received process-data CAN telegrams, otherwise the converter switches off with F082. With the parameter value 0, the monitoring function is de-activated.
The converter monitors the entry of process data into the dual-port RAM from that point of time at which the CBC enters process data into the dual-port RAM for the first time. Only from this point of time onwards can error F082 be triggered!

DANGER

If the "On" command (bit 0) has been softwired to the dual-port RAM, the following measures must be taken for reasons of safety:

An "OFF2" or "OFF3" command (see instruction manual of the converter, section "Control word") must be additionally parameterized to the terminal strip / PMU as, otherwise, the converter can no longer be turned off by means of a defined command if the communications system breaks down!

P692 (Reaction TlgOFF)

Reaction to telegram failure
With parameter P692 (see also instruction manual of the converter, section "Parameter list"), you can specify how the converter is to react to telegram failure.

With the parameter value 0 "Fault", the converter immediately switches off with fault F082. The drive coasts to a stop.
With parameter value 1 "OFF3 (fast stop)", the drive carries out an OFF3 command (OFF with fast stop) and only then assumes a fault status with fault F082.

P781.i13 (fault delay; only applies to CUMC and CUVC)

With this parameter, P731.13, fault F082 can be delayed, i.e. the drive is not turned off immediately when a fault occurs but only after expiry of the time entered in the parameter.
This makes it possible to react flexibly to a bus failure. With the help of binector B0035 "CB/TB telegram failure", the drive can be shut down (OFF1 or OFF3) by making the fault delay longer than the ramp-down time.

8.4.6 Diagnosis and troubleshooting

NOTE

With regard to basic parameterization, please note the differences to the types of unit with the older function classes FC (CU1), VC (CU2) and SC (CU3). These differences are described below.

In order to make these differences clear, the parameter numbers and other deviations are either printed in dark gray or have a dark gray background.

8.4.6.1 Evaluation of hardware diagnostics

LED displays

On the front of the optional CBC board, there are three LED displays which give information on the current operating status. The following LEDs are provided:

- CBC on (red)
- Data exchange with the basic unit (yellow)
- Telegram traffic via CAN (green)

Status display

LED	Status	Diagnostic information
Red	Flashing	CBC in operation; voltage supply on
Yellow	Flashing	Fault-free data exchange with the basic unit
Green	Flashing	Fault-free process-data transfer via the CAN bus

Table 8.4-9 Status display of the CBC

Fault displays

LED	Status	Diagnostic information
Red	Flashing	Cause of fault:
Yellow	Continuously lit	Serious fault in the CBC
Green	Continuously lit	Remedy: replace CBC

Table 8.4-10 Fault display for CBC faults

LED	Status	Diagnostic information
Red	Flashing	CBC is waiting for the start
Yellow	Off	of parameterization by the
Green	Continuously lit	converter / inverter

Table 8.4-11 Fault display during parameterization

LED	Status	Diagnostic information
Red	Flashing	CBC is waiting for completion
Yellow	Continuously lit	of parameterization by the
Green	Off	converter / inverter

Table 8.4-12 Fault display during parameterization

LED	Status	Diagnostic information
Red	Flashing	No net-data traffic via the CAN bus,
Yellow	Flashing	e.g. bus connector pulled out, EMC fault,
Green	Off	interchanged connection, nodes are not being supplied with net data via the CAN bus

Table 8.4-13 Fault display during operation

NOTE

During normal operation, all three LEDs light up synchronously and for the same length of time (flashing)!

The stationary status of an LED (on or off) indicates an unusual operating status (parameterization phase or fault)!

8.4.6.2 Fault displays and alarms on the basic unit

If errors/faults occur in CAN-bus communication with the CBC, corresponding errors or alarms are also displayed on the PMU or OP1S of the basic unit.

Alarms

Alarm	Meaning
A 083	CAN telegrams with errors are being received or sent and the internal error counter has exceeded the alarm limit. • The CAN telegrams with errors are ignored. The data last sent remain valid. If these CAN telegrams contain process data, the telegram-failure monitor (P722 / P695) can respond – depending on the setting – with error F082 (DPR telegram failure). If the PKW CAN telegrams contain errors or are defective, there is no reaction in the converter. ⇒ Check parameter P720 / P705 (baud rate) for each bus node and, if necessary, correct. ⇒ Check cable connection between the bus nodes ⇒ Check cable shield. The bus cable must be shielded on both sides. ⇒ Lower the EMC loading ⇒ Replace CBC board
A 084	CAN telegrams with errors are being received or sent and the internal error counter has exceeded the fault limit. • The CAN telegrams with errors are ignored. The data last sent remain valid. If these CAN telegrams contain process data, the telegram monitor (P722 / P695) – depending on the setting – can respond with error F082 (DPR telegram failure). If the PKW CAN telegrams contain errors or are defective, there is no reaction in the converter. ⇒ Check parameter P720 / P705 (baud rate) for each bus node and, if necessary, correct. ⇒ Check CAN-bus master ⇒ Check cable connection between the bus nodes ⇒ Check cable shield. The bus cable must be shielded on both sides. ⇒ Lower the EMC loading ⇒ Replace CBC board

• Possible cause
⇒ Remedy

Table 8.4-14 Alarm displays on the basic unit

Alarms A083 and A084 are also stored as information in alarm parameter 6 (r958). The individual alarms are assigned to the corresponding bits in r958 (Bit x = 1: alarm present):

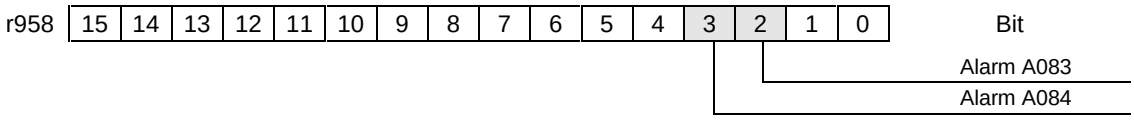

Fault/error display

When the CBC is combined with the control/technology board (CU/TB), the following fault messages can occur:

Fault	Meaning
F 080	**TB/CB Init.:** Incorrect initialization and parameterization of the CBC via the dual-port RAM interface (DPR interface) • CBC selected with parameter P090/P091, but not inserted (not in the case of CUMC or CUVC) ⇒ Correct parameter P090 P091, insert CBC • Parameterization for CBC false, cause of incorrect parameterization in diagnostic parameter r731.01 ⇒ Correct CB parameter P711-P721 / P696 - P706. Correct CB bus address P918 • CBC defective ⇒ Replace CBC
F 081	**DPR heartbeat:** The CBC is no longer processing the heartbeat counter. • CBC not correctly inserted into the electronics box ⇒ Check CBC • CBC defective ⇒ Replace CBC
F 082	**DPR telegram failure:** The telegram-failure time set by means of parameter P722 / P695 has expired • CAN-bus master has failed (green LED on the CBC is continuously off) • Cable connection between the bus nodes has been interrupted (green LED on the CBC is continuously off) ⇒ Check the bus cable • EMC loading of the bus cable too high. ⇒ Refer to EMC notes • Telegram monitoring time has been set too low (the green LED on the CBC flashes) ⇒ Increase the parameter value in P722 / P695 • CBC defective ⇒ Replace CBC

• Possible cause
⇒ Remedy

Table 8.4-15 Fault displays on the basic unit

8.4.6.3 Evaluation of the CBC diagnostic parameter

NOTE

Please note that, for types of unit with the older function classes FC (CU1), VC (CU2) and SC (CU3), indexed parameter r731.i is to be used appropriately instead of r732.i

The CBC stores this information in a diagnostics buffer to support start-up and for service purposes. The diagnostic information can be read out with indexed parameter r732.i (CB/TB diagnosis). This parameter is displayed as a hexadecimal. The CBC diagnostics buffer is assigned as follows:

CBC-diagnosis parameter

Meaning	r731.i	r732.i
Fault detection configuration	r731.1	r732.1
Counter: telegrams received without faults/errors	r731.2	r732.2
Counter: lost PZD telegrams	r731.3	r732.3
Counter for Bus-Off states	r731.4	r732.4
Counter for error-warning states	r731.5	r732.5
Assigned internally	r731.6	r732.6
Assigned internally	r731.7	r732.7
Assigned internally	r731.8	r732.8
Assigned internally	r731.9	r732.9
Counter for PZD telegrams sent without errors/faults	r731.10	r732.10
Counter for faults during transfer of PZD telegrams	r731.11	r732.11
Assigned internally	r731.12	r732.12
Assigned internally	r731.13	r732.13
Counter for PKW tasks processed without errors/faults	r731.14	r732.14
Counter for faults/errors during processing of PKW tasks	r731.15	r732.15
Type of fault/error in the case of faults during processing of PKW tasks	r731.16	r732.16
Assigned internally	r731.17	r732.17
Counter for lost PKW tasks	r731.18	r732.18
Reserved	r731.19	r732.19
Reserved	r731.20	r732.20
Reserved	r731.21	r732.21
Reserved	r731.22	r732.22
Reserved	r731.23	r732.23
Assigned internally	r731.24	r732.24
Assigned internally	r731.25	r732.25
Software version	r731.26	r732.26
Software identification	r731.27	r732.27
Software date, day/month	r731.28	r732.28
Software date, year	r731.29	r732.29

Table 8.4-16 CBC diagnostics buffer

8.4.6.4 Meaning of CBC diagnosis

P732.1 **Fault detection configuration**

If an invalid value or an invalid combination of parameter values is contained in the CB parameters, the converter switches to fault mode with fault F080 and fault value 5 (r949). The cause of the incorrect parameterization can then be determined by means of this index of CB diagnostic parameter r731.

Value (hex)	Meaning
00	No fault/error
01	Incorrect bus address (P918)
02	Incorrect CAN ID in the case of a PKW task (P711 / P696)
03	*Internal*
04	*Internal*
05	Incorrect CAN ID in the case of a PKW-task broadcast (P719 / P704)
06	*Internal*
07	Incorrect CAN ID in the case of a PZD-receive (P712 / P697)
08 -0C	*Internal*
0D	Incorrect CAN ID in the case of a PZD-send (P713 / P698)
0E	PZD-send length is 0 (P714 / P699)
0F	PZD-send length to great (>16) (P714 / P699)
10 - 13	*Internal*
14	Incorrect CAN ID in the case of a PZD-receive broadcast (P716 / P701)
15	Incorrect CAN ID in the case of a PZD-receive multicast (P717 / P702)
16	Incorrect CAN ID in the case of a PZD-receive cross (P718 / P703)
17	Invalid baud rate (P720 / P705)
18 - 22	*Internal*
23	Incorrect CAN protocol type (P721 / P706.01)
24	PKW-request broadcast (P719 / P704) without PKW task (P711 / P696)
25 .. 2F	*Reserved*
30	Overlapping of CAN identifier PKW <-> PKW-broadcast
31	Overlapping of CAN identifier PKW <-> PZD-receive
32	Overlapping of CAN identifier PKW <-> PZD-send
33	Overlapping of CAN identifier PKW <-> PZD-receive broadcast
34	Overlapping of CAN identifier PKW <-> PZD-receive multicast
35	Overlapping of CAN identifier PKW <-> PZD-receive cross
36	Overlapping of CAN identifier PKW-broadcast <-> PZD-receive
37	Overlapping of CAN identifier PKW-broadcast <-> PZD-send
38	Overlapping of CAN identifier PKW-broadcast <-> PZD-receive broadcast

Value (hex)	Meaning
39	Overlapping of CAN identifier PKW-broadcast <-> PZD-receive-Multicast
3A	Overlapping of CAN identifier PKW-broadcast <-> PZD-receive cross
3B	Overlapping of CAN identifier PZD-receive <-> PZD-send
3C	Overlapping of CAN identifier PZD-receive <-> PZD-receive-Broadcast
3D	Overlapping of CAN identifier PZD-receive <-> PZD-receive multicast
3E	Overlapping of CAN identifier PZD-receive <-> PZD-receive cross
3F	Overlapping of CAN identifier PZD-send <-> PZD-receive broadcast
40	Overlapping of CAN identifier PZD-send <-> PZD-receive multicast
41	Overlapping of CAN identifier PZD-send <-> PZD-receive cross
42	Overlapping of CAN identifier PZD-receive broadcast <-> PZD-receive multicast
43	Overlapping of CAN identifier PZD-receive broadcast <-> PZD-receive cross
44	Overlapping of CAN identifier PZD-receive multicast <-> PZD-receive cross

r731.02 **Counter PZD-receive CAN telegrams**
Counter for PZD CAN telegrams received error-free since voltage ON.

r731.03 **Counter Lost PZD CAN telegrams**
Counter for lost PZD telegrams since voltage ON. If the CAN-bus master sends process-data telegrams faster than the slave can process them, telegrams are lost. These lost telegrams are totaled here.

r731.04 **Counter Bus-Off**
Counter of the bus-off states since voltage ON (alarm A084).

r731.05 **Counter Error-Warning**
Counter of the error-warning states since voltage ON (alarm A083).

r731.10 **Counter PZD-send CAN telegrams**
Counter for PZD telegrams sent error-free since voltage ON.

r731.11 **Counter Errors PZD-send CAN telegrams**
Counter for errors during sending of PZD telegrams, i.e. when a PZD telegram was to be sent but it was not possible, e.g. in the case of bus overload.

r731.14 **Counter PKW CAN telegrams**
Counter for PKW tasks and replies processed error-free since voltage ON.

r731.15 **Counter Errors PKW CAN telegrams**
Counter for errors during processing of PKW tasks, e.g. due to bus overload or missing reply from the basic unit.

r731.16 **Error type PKW CAN telegrams**
Here, an error identifier is entered if an error occurs during processing of a PKW task.

Value	Meaning
0	No error
1	*Internal*
2	*Internal*
3	*Internal*
4	*Internal*
5	*Internal*
6	*Internal*
7	*Internal*
8	*Internal*
9	Error during sending of PKW reply (in the case of waiting for a free channel)
10	*Internal*
11	Time out in the case of waiting for a PKW reply from the basic unit (basic unit does not process any PKW tasks)
12	Time out in the case of waiting for a free channel (bus overload)

r731.18 **Counter Lost PKW CAN telegrams**
Counter for PKW tasks lost since voltage ON. If the CAN-bus master sends PKW tasks faster than the slave can process them, PKW tasks are lost. These lost PKW tasks are totaled here.

r731.26 **Software version**

r731.27 **Software identifier**

r731.28 **Software date**
Software date, day (high byte) and month (low byte) shown in hexadecimal form

r731.29 **Software date**
Software date, year (shown in hexadecimal form)

8.4.7 Appendix

Technical data

Order No.	6SE7090-0XX84-0FG0
Size (length x width)	90 mm x 83 mm
Degree of pollution	Pollution degree 2 to IEC 664-1 (DIN VDE 0110/T1), Moisture condensation during operation is not permissible
Mechanical specifications During stationary use • deflection • acceleration During transport • deflection • acceleration	To DIN IEC 68-2-6 (if board correctly mounted) 0.15 mm in the frequency range 10 Hz to 58 Hz 19.6 m/s^2 in the frequency range > 58 Hz to 500 Hz 3.5 mm in the frequency range 5 Hz to 9 Hz 9.8 m/s^2 in the frequency range > 9 Hz to 500 Hz
Climatic class	Class 3K3 to DIN IEC 721-3-3 (during operation)
Type of cooling	Natural-air cooling
Permissible ambient or cooling-medium temperature • during operation • during storage • during transport	 0° C to +70° C (32° F to 158° F) -25° C to +70° C (-13° F to 158° F) -25° C to +70° C (-13° F to 158° F)
Humidity rating	Relative humidity ≤ 95 % during transport and storage ≤ 85 % during operation (moisture condensation not permissible)
Supply voltage	5 V ± 5 %, max. 500 mA, internally from the basic unit

8.5 CBC CANopen communication board

This chapter describes the CANopen software functions.

The CANopen software functions comply with profile definitions:

CiA DS 301 4.01

CiA DSP 402 V1.1

This functionality is available for the MASTERDRIVES MC and a freely definable CANopen device from CBC SW version 3.0 and later.

CAUTION

Before installing and commissioning a MASTERDRIVES with a communication board, you must read Section 8.4 "CBC communication board" (part CBC) as well as the safety instructions given in Subsections 8.4.1 and 8.4.3.

The terms and abbreviations used in this document are defined in Subsection 8.5.13.

Preconditions

Certain conditions must be fulfilled before the CBC can be operated with CANopen.

- CANopen functionality is available only with MASTERDRIVES MC **firmware version 1.5 and later**.
- The actual value weighting factor (AVWF) must be normalized in µm to ensure that actual values and setpoints are converted correctly.
- The free CANopen device can be a MASTERDRIVES VC, a rectifier/regenerative feedback unit or an AFE.

The following CANopen modi have been implemented for the MASTERDRIVES MC with F01:

- Profile Velocity Mode (speed control)
- Profile Position Mode (MDI positioning)
- Homing Mode (homing)
- Synchronous Mode (electronic gearbox)
- Setup Mode
- Automatic Position Mode
- Automatic Single Block Mode

The following modes have been implemented for the MASTERDRIVES MC:

- Profile Velocity Mode (speed control)
- Profile Position Mode (B-pos positioning)
- Homing Mode
- Profile Torque Mode
- Setup Mode

Parameters must be assigned in the MASTERDRIVES system before the individual CANopen modes can be used.

The relevant scriptfiles are stored on the Drive Monitor CD supplied with every unit. The scriptfiles contain the basic parameter settings for CANopen communication, but no motor settings or optimization data. The scriptfiles have to be adapted to suit individual applications.

You therefore need to adapt, for example, the PDO mapping or the coarse pulse selection.

The necessary interconnections and signal outputs from the CBC are stored as drawings in Subsection 8.5.12.

The CBC CANopen functionality can be utilized only by one CBC in one device. If you require a second CBC to be able to transmit particular process data from the MASTERDRIVES, you will need to operate the second board on layer 2 (P721.01 = 0).

What is the difference between MASTERDRIVES MC, MASTERDRIVES MC-F01 and the free CANopen device?

MASTERDRIVES MC The modes Profile Position, Setup and Homing with basic positioning are available to the MASTERDRIVES MC without the F01 technology option. The Profile Velocity and Profile Torque modes are processed via the basic unit.

MASTERDRIVES MC-F01 All modes are processed via the F01 technology option on MASTERDRIVES MC-F01.

NOTE The MASTERDRIVES MC-F01 functionality is available only if you have enabled the F01 option.

The CANopen modes Profile Position, Profile Velocity and Homing are available on the MASTERDRIVES MC-F01. They are controlled via object 6040h.

Manufacturer-specific modes Synchronous and Setup as well as Automatic Position and Automatic Single Block modes can also be used.

The Synchronous mode and Setup modes are controlled via word 6040h. The manufacturer-specific modes (Automatic Position and Automatic Position Single Block Mode) are controlled via object 4040h (technology control word).

The above modes are controlled as described in Chapter 9 "Technology Option F01" in the compendium. Object 4041h is used as the status word for the mode. The objects are assigned in the same way as described in function diagrams [FP 809] and [FP 811].

The difference in mode functionalities between the MC and MC-F01 versions is negligible. Some objects differ in terms of their transferability or subindices. Detailed information about these differences can be found in the list of Objects (Subsection 8.5.1) and the receive and transmit PDO tables (Subsection 8.5.2.4).

In Homing mode with the MC but without technology option F01, only homing methods 17-35 are available and referencing (homing) without the technology option is less accurate.

Free CANopen device

The free CANopen device allows units such as AFEs or R/RFs that are not specified in the profile to be linked to CANopen systems. The MASTERDRIVES VC which is not operating as a CANopen device on the CBC can therefore be linked to a CANopen bus system as well.

The objects 'control word 6040h', 'status word 6041h', 'modes of operation 6060h' and 'modes of operation display 6061h' are provided in the free CANopen device. The objects 6040h and 6041h must be linked to the control word and status words of the connected device. Objects 6060h and 6061h transfer the bits only 1:1. You must use free blocks to interconnect the bits in a meaningful manner.

A range of manufacturer-specific objects are provided for the transmission of setpoints or actual values. These must be mapped to a PDO so that they are available in the device. The tables in Subsections 8.5.1 and 8.5.2.4 specify which PDOs and objects are provided for the free CANopen device.

Description

CANopen is a standardized application for distributed industrial automation systems based on CAN and the communication standard CAL. CANopen is a CAN in Automation (CiA) standard which has been used very widely ever since its launch.

CANopen can be regarded as the definitive standard for the implementation of industrial CAN-based system solutions in Europe.

CANopen is founded on a so-called "communications profile" that specifies the basic communication mechanisms and their definition [CiA DS 301].

The primary device types employed in industrial automation systems such as, for example,

- digital and analog input / output modules [CiA DS 401]
- drives and motion control [CiA DSP 402]
- control units [CiA DSP 403]
- controllers [CiA DSP 404]
- PLCs [CiA DSP 405]
- encoders [CiA DSP 406]

are defined in so-called "device profiles".

The device profiles specify the functionality of standard equipment of the relevant type.

A central element of the CANopen standard is the description of device functionality using an "object directory" (OD).

The object directory is divided into two areas, one containing general data about the device such as identification, manufacturer name, etc., plus communication parameters and a second area containing a description of the device functionality.

An entry ("object") in the object directory is identified by a 16-bit index and an 8-bit subindex.

The entries in the object directory make the "application objects" of a device, such as input and output signals, device parameters, device functions or network variables, accessible in standardized form via the network.

In a similar manner to other field bus systems, CANopen also uses two basic data transmission mechanisms, i.e. high-speed exchange of short process data via so-called "Process Data Objects" (PDOs) and access to entries in the object directory via so-called "Service Data Objects" (SDOs). The primary purpose of the latter is to transfer parameters while equipment is being configured and, in general, to transmit long data areas. Process data objects are generally transferred in event-oriented form, cyclically or - on request - as broadcast objects without additional protocol overhead.

A total of 8 bytes of data can be transmitted in one PDO. The transmission and receipt of PDOs can be synchronized throughout the network ("synchronous PDOs") using a synchronization message. The assignment between application objects and a particular PDO (transmission object) can be configured via a structure definition ("PDO mapping") in the OD. Assignments can thus be adapted to meet the requirements of a particular application.

SDOs are transmitted as a confirmed data transfer, with two CAN objects per transmission, in the form of a peer-to-peer connection between two network nodes. The relevant object directory entry is addressed through specification of the index and subindex of the OD entry. Messages with a total length of 5 bytes can be transferred. Transferring SDO messages involves an additional overhead.

Standardized, higher-priority, event-oriented alarm messages ("Emergency_Messages") are provided to signal device faults.

The functionality required for the preparation and coordinated starting of a distributed automation system complies with the mechanisms defined by the CAL Network Management (NMT) specification. The principle of "Node Guarding" underlying the cyclical node monitoring functions are also compliant with NMT.

CAN message identifiers can be assigned to PDOs and SDOs through the direct entry of identifiers in the data structures of the object directory or, for simple system structures, through the use of predefined identifiers.

8.5.1 Object directory

The following tables show a complete list of all implemented objects. The table contains the index and subindex of the object, as well as a brief description of its functionality.

The transmission mode for each object is specified, i.e. the table indicates whether the PDO or SDO transfer method is used for the relevant object. The parameters or connectors which contain the object data are also listed. If the table specifies both modes of transmission, the object can be transferred either as an SDO only or as both an SDO and PDO.

For more detailed information about objects, please refer to the CANopen profiles DS 301 V4.0 and DSP 402 V1.1.

CiA DS 301

Object index	Sub-index	Object name	Description	Transmitted by SDO		Transmitted by PDO	
				Yes / No	Connector / Parameter	Yes / No	Connector / Parameter
1000h		Device Type	Device type	Yes	④	No	-
1001h		Error Register	Group register for errors	Yes	①	No	-
1003h		Pre-defined error field	Display parameter for error code	Yes	①	No	-
	.0	Number of errors	Number of errors	Yes	①	No	-
	.1	Standard error field	Error code of error	Yes	①	No	-
1005h		COB-ID SYNC Message	Identifier of SYNC message	Yes	③ ⑥	No	-
1008h		Manufacturer Device Name	Manufacturer, device name	Yes	④	No	-
100Ah		Manufacturer Software Version	CBC software version	Yes	③	No	-
100Bh		Node-ID	Number of node on bus	Yes	P918	No	-
100Ch		Guard Time	Period between two guarding messages	Yes	③ ⑥	No	-
100Dh		Life Time Factor	Number of permissible guarding message failures until life time event	Yes	③ ⑥	No	-
100Eh		Node Guarding Identifier	Node guarding identifier	Yes	⑫ ⑥	No	-
100Fh		Number of SDOs supported	Number of implemented SDO channels	Yes	③	No	-
1014h		COB-ID Emergency Message	EMERGENCY message identifier	Yes	⑫ ⑥	No	-

Object index	Sub-index	Object name	Description	Transmitted by SDO		Transmitted by PDO	
				Yes / No	Connector / Parameter	Yes / No	Connector / Parameter
1018		Identity Object	Identifying object	Yes		No	-
	.0	Number of entries	Number of subindices	Yes	③	No	-
	.1	Vendor-ID	Manufacturer number allocated by Cia	Yes	③	No	-
1029h		Error behaviour object	Object for configuring error reaction of bus node	Yes		No	-
	.0	No. Of error classes	Number of different error reactions	Yes	③	No	-
	.1	Communication error	Reaction of bus node to a life guarding event	Yes	④ ⑥	No	-
1200h		SDO-Parameters	Identifier for SDO messages	Yes		No	-
	.0	Number of entries	Number of subindices	Yes	③	No	-
	.1	COB-ID Client>Server	SDO request identifier	Yes	⑫ ⑥	No	-
	.2	COB-ID Server>Client	SDO response identifier	Yes	⑫ ⑥	No	-
1400h-1403h		Receive PDO Communication Parameters	Setting parameters for receive PDOs	Yes		No	-
	.0	Number of entries	Number of subindices	Yes	③	No	-
	.1	COB-ID PDO	PDO identifier	Yes	⑫ ⑥	No	-
	.2	Transmission type	Setting parameters for transmission mode	Yes	② ⑥	No	-
1600h-1603h		Receive PDO Mapping Parameters	Parameters for mapped objects in receive PDOs	Yes		No	-
	.0	Number of mapped objects in PDO	Number of mapped objects	Yes	②	No	-
	.1	First mapped object	First mapped object. Dependent on PDO selected from R_PDO list	Yes	②	No	-
	.2	Second mapped object	Second mapped object. Dependent on PDO selected from R_PDO list	Yes	②	No	-
	.3	Third mapped object	Third mapped object. Dependent on PDO selected from R_PDO list	Yes	②	No	-
	4.	Fourth mapped object	Fourth mapped object. Dependent on PDO selected from R_PDO list	Yes	②	No	-
1800h-1803h		Transmit PDO Communication Parameters	Setting parameters for transmit PDOs	Yes		No	-
	.0	Number of entries	Number of subindices	Yes	③	No	-
	.1	COB-ID PDO	PDO identifier	Yes	⑫ ⑥	No	-
	.2	Transmission type	Setting parameters for transmission mode	Yes	② ⑥	No	-

Object index	Sub-index	Object name	Description	Transmitted by SDO		Transmitted by PDO	
				Yes / No	Connector / Parameter	Yes / No	Connector / Parameter
1A00h-1A03h		Transmit PDO Mapping Parameters	Parameters for mapped objects in transmit PDOs	Yes		No	-
	0.	Number of mapped objects in PDO	Number of mapped objects	Yes	②	No	-
	1.	First mapped object	First mapped object. Dependent on PDO selected from T_PDO list	Yes	②	No	-
	2.	Second mapped object	Second mapped object. Dependent on PDO selected from T_PDO list	Yes	②	No	-
	3.	Third mapped object	Third mapped object. Dependent on PDO selected from T_PDO list	Yes	②	No	-
	4.	Fourth mapped object	Fourth mapped object. Dependent on PDO selected from T_PDO list	Yes	②	No	-

Manufacturer-specific objects

Object index	Sub-index	Object name	Description	Transmitted by SDO		Transmitted by PDO	
				Yes / No	Connector / Parameter	Yes / No	Connector / Parameter
2002h		Gear ratio	Speed ratio factor for slave gears in synchronous operation	Yes	⑨	Yes	9)
	.0	Number of entries	Number of subindices	Yes	③	No	-
	.1	Numerator	Gear numerator	Yes	U604.01	Yes	K3005-K3014
	.2	Denominator	Gear denominator	Yes	U604.02	Yes	K3005-K3014
2003h		Version_Parameter_ Set	Parameter for storage of a parameter set in MASTERDRIVES	Yes	U017 ⑨ ⑩	No	-
2100h		Transmission Rate	Parameter for baud rate setting	Yes	P720 ⑨ ⑩	No	-
2101h		Node Number	Parameter for device address setting	Yes	P918 ⑨ ⑩	No	-
2200h	.0	Number of entries	Number of subindices	Yes	③ ⑩	No	-
	.1	Nominal speed	Nominal speed	Yes	P205	No	-
	.2	Reference speed before the decimal point	Reference speed before the decimal point	Yes	P353.01	No	-
	.3	Reference speed after the decimal point	Reference speed after the decimal point	Yes	P353.02	No	-
	.4	Norm maximum deceleration	Rated acceleration	Yes	U857	No	-

Object index	Sub-index	Object name	Description	Transmitted by SDO		Transmitted by PDO	
				Yes / No	Connector / Parameter	Yes / No	Connector / Parameter
3001h		Free object 3001h / 16 Bit	Free 16-bit object for receiving in PDO 1	Yes	② ⑤ ⑨ ⑩ ⑪	Yes	K3003
3002h		Free object 3002h / 16 Bit	Free 16-bit object for receiving in PDO 1	Yes	② ⑤ ⑨ ⑩ ⑪	Yes	K3004
3003h		Free object 3003h / 16 Bit	Free 16-bit object for receiving in PDO 2,3,4	Yes	② ⑤ ⑨ ⑩	Yes	K3007 K3011 K3015
3004h		Free object 3004h / 16 Bit	Free 16-bit object for receiving in PDO 2,3,4	Yes	② ⑤ ⑨ ⑩	Yes	K3008 K3012 K3016
3005h		Free object 3005h / 16 Bit	Free 16-bit object for receiving in PDO 2,3,4	Yes	② ⑤ ⑨ ⑩	Yes	K3007 K3011 K3015
3006h		Free object 3006h / 16 Bit	Free 16-bit object for receiving in PDO 2,3,4	Yes	② ⑤ ⑨ ⑩	Yes	K3008 K3012 K3016
3007h		Free object 3007h / 16 Bit	Free 16-bit object for receiving in PDO 2,3,4	Yes	② ⑤ ⑨ ⑩	Yes	K3007 K3011 K3015
3008h		Free object 3008h / 16 Bit	Free 16-bit object for receiving in PDO 2,3,4	Yes	② ⑤ ⑨ ⑩	Yes	K3008 K3012 K3016
3009h		Free object 3009h / 16 Bit	Free 16-bit object for receiving in PDO 2,3,4	Yes	② ⑤ ⑨ ⑩ ⑪	Yes	K3005 K3009 K3013
300Ah		Free object 300Ah / 16 Bit	Free 16-bit object for receiving in PDO 2,3,4	Yes	② ⑤ ⑨ ⑩ ⑪	Yes	K3006 K3010 K3014
300Bh		Free object 300Bh / 16 Bit	Free 16-bit object for receiving in PDO 2,3,4	Yes	② ⑤ ⑨ ⑩ ⑪	Yes	K3007 K3011 K3015
300Ch		Free object 300Ch / 16 Bit	Free 16-bit object for receiving in PDO 2,3,4	Yes	② ⑤ ⑨ ⑩ ⑪	Yes	K3008 K3012 K3016
300Dh		Free object 300Dh / 16 Bit	Free 16-bit object for receiving in PDO 2,3,4	Yes	② ⑤ ⑨ ⑩ ⑪	Yes	K3005 K3009 K3013
300Eh		Free object 300Eh / 16 Bit	Free 16-bit object for receiving in PDO 2,3,4	Yes	② ⑤ ⑨ ⑩ ⑪	Yes	K3006 K3010 K3014
300Fh		Free object 300Fh / 16 Bit	Free 16-bit object for receiving in PDO 2,3,4	Yes	② ⑤ ⑨ ⑩ ⑪	Yes	K3007 K3011 K3015
3010h		Free object 3010h / 16 Bit	Free 16-bit object for receiving in PDO 2,3,4	Yes	② ⑤ ⑨ ⑩ ⑪	Yes	K3008 K3012 K3016
3011h		Free object 3011h / 16 Bit	Free 16-bit object for receiving in PDO 2,3,4	Yes	② ⑤ ⑩	Yes	K3006 K3010 K3014

Object index	Sub-index	Object name	Description	Transmitted by SDO		Transmitted by PDO	
				Yes / No	Connector / Parameter	Yes / No	Connector / Parameter
3012h		Free object 3012h / 16 Bit	Free 16-bit object for receiving in PDO 2,3,4	Yes	② ⑤ ⑩	Yes	K3007 K3011 K3015
3013h		Free object 3013h / 16 Bit	Free 16-bit object for receiving in PDO 2,3,4	Yes	② ⑤ ⑩	Yes	K3008 K3012 K3016
3014h		Free object 3014h / 16 Bit	Free 16-bit object for receiving in PDO 2,3,4	Yes	② ⑤ ⑩	Yes	K3008 K3012 K3016
3015h		Free object 3015h / 16 Bit	Free 16-bit object for receiving in PDO 2,3,4	Yes	② ⑤ ⑪	Yes	K3005 K3009 K3013
3016h		Free object 3016h / 16 Bit	Free 16-bit object for receiving in PDO 2,3,4	Yes	② ⑤ ⑪	Yes	K3006 K3010 K3014
3017h		Free object 3017h / 16 Bit	Free 16-bit object for receiving in PDO 2,3,4	Yes	② ⑤ ⑪	Yes	K3007 K3011 K3015
3018h		Free object 3018h / 16 Bit	Free 16-bit object for receiving in PDO 2,3,4	Yes	② ⑤ ⑪	Yes	K3008 K3012 K3016
3020h		Free object 3020h / 32 Bit	Free 32-bit object for receiving in PDO 1	Yes	② ⑤ ⑨ ⑩ ⑪	Yes	K3033
3021h		Free object 3021h / 32 Bit	Free 32-bit object for receiving in PDO 2,3,4	Yes	② ⑤ ⑨ ⑩	Yes	K3037 K3041 K3045
3022h		Free object 3022h / 32 Bit	Free 32-bit object for receiving in PDO 2,3,4	Yes	② ⑤ ⑨ ⑩	Yes	K3037 K3041 K3045
3023h		Free object 3023h / 32 Bit	Free 32-bit object for receiving in PDO 2,3,4	Yes	② ⑤ ⑨ ⑩	Yes	K3037 K3041 K3045
3024h		Free object 3024h / 32 Bit	Free 32-bit object for receiving in PDO 2,3,4	Yes	② ⑤ ⑨ ⑩ ⑪	Yes	K3035 K3039 K3043
3025h		Free object 3025h / 32 Bit	Free 32-bit object for receiving in PDO 2,3,4	Yes	② ⑤ ⑨ ⑩ ⑪	Yes	K3037 K3041 K3045
3026h		Free object 3026h / 32 Bit	Free 32-bit object for receiving in PDO 2,3,4	Yes	② ⑤ ⑨ ⑩ ⑪	Yes	K3035 K3039 K3043
3027h		Free object 3027h / 32 Bit	Free 32-bit object for receiving in PDO 2,3,4	Yes	② ⑤ ⑨ ⑩ ⑪	Yes	K3037 K3041 K3045
3028h		Free object 3028h / 32 Bit	Free 32-bit object for receiving in PDO 2,3,4	Yes	② ⑤ ⑩	Yes	K3036 K3040 K3044
3029h		Free object 3029h / 32 Bit	Free 32-bit object for receiving in PDO 2,3,4	Yes	② ⑤ ⑪	Yes	K3035 K3039 K3043

Object index	Sub-index	Object name	Description	Transmitted by SDO		Transmitted by PDO	
				Yes / No	Connector / Parameter	Yes / No	Connector / Parameter
302Ah		Free object 302Ah / 32 Bit	Free 32-bit object for receiving in PDO 2,3,4	Yes	② ⑤ ⑪	Yes	K3037 K3041 K3045
3101h		Free object 3101h / 16 Bit	Free 16-bit object for sending in PDO 2,3,4	Yes	② ⑤ ⑨ ⑪	Yes	P734.07 P734.11 P734.15
3103h		Free object 3103h / 16 Bit	Free 16-bit object for sending in PDO 2,3,4	Yes	② ⑤ ⑨ ⑩	Yes	P734.07 P734.11 P734.15
3104h		Free object 3104h / 16 Bit	Free 16-bit object for sending in PDO 2,3,4	Yes	② ⑤ ⑨ ⑩	Yes	P734.08 P734.12 P734.16
3105h		Free object 3105h / 16 Bit	Free 16-bit object for sending in PDO 2,3,4	Yes	② ⑤ ⑨ ⑩	Yes	P734.07 P734.11 P734.15
3106h		Free object 3106h / 16 Bit	Free 16-bit object for sending in PDO 2,3,4	Yes	② ⑤ ⑨ ⑩	Yes	P734.08 P734.12 P734.16
3107h		Free object 3107h / 16 Bit	Free 16-bit object for sending in PDO 2,3,4	Yes	② ⑤ ⑨ ⑩ ⑪	Yes	P734.05 P734.09 P734.13
3108h		Free object 3108h / 16 Bit	Free 16-bit object for sending in PDO 2,3,4	Yes	② ⑤ ⑨ ⑩ ⑪	Yes	P734.06 P734.10 P734.14
3109h		Free object 3109h / 16 Bit	Free 16-bit object for sending in PDO 2,3,4	Yes	② ⑤ ⑨ ⑩ ⑪	Yes	P734.07 P734.11 P734.15
310Ah		Free object 310Ah / 16 Bit	Free 16-bit object for sending in PDO 2,3,4	Yes	② ⑤ ⑨ ⑩ ⑪	Yes	P734.08 P734.12 P734.16
310Bh		Free object 310Bh / 16 Bit	Free 16-bit object for sending in PDO 2,3,4	Yes	② ⑤ ⑨ ⑩ ⑪	Yes	P734.05 P734.09 P734.13
310Ch		Free object 310Ch / 16 Bit	Free 16-bit object for sending in PDO 2,3,4	Yes	② ⑤ ⑨ ⑩ ⑪	Yes	P734.06 P734.10 P734.14
310Dh		Free object 310Dh / 16 Bit	Free 16-bit object for sending in PDO 2,3,4	Yes	② ⑤ ⑨ ⑩ ⑪	Yes	P734.07 P734.11 P734.15
310Eh		Free object 310Eh / 16 Bit	Free 16-bit object for sending in PDO 2,3,4	Yes	② ⑤ ⑨ ⑩ ⑪	Yes	P734.08 P734.12 P734.16
310Fh		Free object 310Fh / 16 Bit	Free 16-bit object for sending in PDO 2,3,4	Yes	② ⑤ ⑩	Yes	P734.06 P734.10 P734.14
3110h		Free object 3110h / 16 Bit	Free 16-bit object for sending in PDO 2,3,4	Yes	② ⑤ ⑩	Yes	P734.07 P734.11 P734.15

Object index	Sub-index	Object name	Description	Transmitted by SDO		Transmitted by PDO	
				Yes / No	Connector / Parameter	Yes / No	Connector / Parameter
3111h		Free object 3111h / 16 Bit	Free 16-bit object for sending in PDO 2,3,4	Yes	② ⑤ ⑩	Yes	P734.08 P734.12 P734.16
3112h		Free object 3112h / 16 Bit	Free 16-bit object for sending in PDO 2,3,4	Yes	② ⑤ ⑪	Yes	P734.05 P734.09 P734.13
3113h		Free object 3113h / 16 Bit	Free 16-bit object for sending in PDO 2,3,4	Yes	② ⑤ ⑪	Yes	P734.06 P734.10 P734.14
3114h		Free object 3114h / 16 Bit	Free 16-bit object for sending in PDO 2,3,4	Yes	② ⑤ ⑪	Yes	P734.07 P734.11 P734.15
3115h		Free object 3115h / 16 Bit	Free 16-bit object for sending in PDO 2,3,4	Yes	② ⑤ ⑪	Yes	P734.08 P734.12 P734.16
3121h		Free object 3121h / 32 Bit	Free 32-bit object for sending in PDO 2,3,4	Yes	② ⑤ ⑨ ⑩	Yes	P734.07/.08 P734.11/.12 P734.15/.16
3122h		Free object 3122h / 32 Bit	Free 32-bit object for sending in PDO 2,3,4	Yes	② ⑤ ⑨ ⑩	Yes	P734.07/.08 P734.11/.12 P734.15/.16
3123h		Free object 3123h / 32 Bit	Free 32-bit object for sending in PDO 2,3,4	Yes	② ⑤ ⑨ ⑩ ⑪	Yes	P734.05/.06 P734.09/.10 P734.13/.14
3124h		Free object 3124h / 32 Bit	Free 32-bit object for sending in PDO 2,3,4	Yes	② ⑤ ⑨ ⑩ ⑪	Yes	P734.07/.08 P734.11/.12 P734.15/.16
3125h		Free object 3125h / 32 Bit	Free 32-bit object for sending in PDO 2,3,4	Yes	② ⑤ ⑨ ⑩ ⑪	Yes	P734.05/.06 P734.09/.10 P734.13/.14
3126h		Free object 3126h / 32 Bit	Free 32-bit object for sending in PDO 2,3,4	Yes	② ⑤ ⑨ ⑩ ⑪	Yes	P734.07/.08 P734.11/.12P 734.15/.16
3127h		Free object 3127h / 32 Bit	Free 32-bit object for sending in PDO 2,3,4	Yes	② ⑤ ⑩	Yes	P734.06/.07 P734.10/.11 P734.14/.15
3128h		Free object 3128h / 32 Bit	Free 32-bit object for sending in PDO 2,3,4	Yes	② ⑤ ⑪	Yes	P734.05/.06 P734.09/.10 P734.13/.14
3129h		Free object 3129h / 32 Bit	Free 32-bit object for sending in PDO 2,3,4	Yes	② ⑤ ⑪	Yes	P734.07/.08 P734.11/.12 P734.15/.16

Object index	Sub-index	Object name	Description	Transmitted by SDO		Transmitted by PDO	
				Yes / No	Connector / Parameter	Yes / No	Connector / Parameter
4001h		Parameter Download	Object for reading and writing all parameters in MASTERDRIVES	Yes		No	-
	.0	Number of entries	Number of subindices	Yes	③	No	-
	.1	Request identifier, index	Subindex containing the PROFIBUS request, the index and subindex of the parameter to be assigned.	Yes	All (see Subsection 8.5.3.1)	No	-
	.2	Value	Value to be assigned to the parameter (downloads only). To be read out with uploads	Yes	See Subsection 8.5.3.1	No	-
	.3	Response identifier, index	This subindex contains the response identifier to PROFIBUS for downloads or uploads	Yes	See Subsection 8.5.3.1	No	-
4040h		Technology control word	The technology can be controlled completely by this control word. The connection is 1:1 to the technology control word	Yes	⑤ ⑨	Yes	K3003
4041h		Technology status word	This status word contains all technology checkback signals. The connection is 1:1 to the technology status word	Yes	⑨	Yes	P734.02 P734.03
5001h-5FFFh		Parameters of connected device	Objects for reading and writing all parameters of the connected device	Yes	See Subsection 8.5.3.1	No	-

Device Profile DSP 402

Object index	Sub-index	Object name	Description	Transmitted by SDO		Transmitted by PDO	
				Yes / No	Connector / Parameter	Yes / No	Connector / Parameter
6007h		abort connection option code	Converter reaction to a lifeguarding event	Yes	④ ⑥ ⑦	No	-
6040h		Controlword	CANopen control word	Yes	⑤ ⑦	Yes	K3001 K3002
6041h		Statusword	CANopen status word	Yes	⑤ ⑦	Yes	K431 K432/ K889 ⑩ KK315 ⑨ K250
6060h		modes of operation	Object for selecting the operating mode	Yes	⑤	Yes	K3002
6061h		modes_of_operation _display	Object for displaying the selected operating mode	Yes	⑤	Yes	KK315 ⑨ K432 ⑩
6064h		position actual value	Object for displaying the current position	Yes	r185 ⑨ ⑩	Yes	KK120
6067h		position_window	Exact stop window	Yes	⑨U501.17 U502 ⑩ U859	No	-
6068h		position_window_time	Time in exact stop window	Yes	⑨U501.16 U502 ⑩ U864	No	-
6069h		velocity sensor actual value	Actual speed value in inc./s	Yes	r002 ⑨ P171⑩	No	-
606Ah		sensor_selection_code	Selection of velocity source	Yes	③ ⑨ ⑩	No	-
606Bh		velocity_demand_value	Velocity command variable	Yes	r229 ⑨ ⑩	No	-
606Ch		velocity_actual_value	Object for displaying the current velocity	Yes	r230 ⑨ ⑩	Yes	KK91
6071h		target_torque	Object for torque setpoint	Yes	⑩ U008	Yes	K3003/ K3005/ K3009/ K3013
6077h		torque_actual_value	Actual torque	Yes	⑩ r007	Yes	K0241
6078h		current_actual_value	Actual current	Yes	⑩ r004	No	-
607Ah		target_position	Target position	Yes	⑨ U015 ⑩ U874.01	Yes	KK3033 KK3035 KK3039 KK3043
607Ch		home offset	Reference point offset	Yes	⑨ U501.04 U502	No	-

Object index	Sub-index	Object name	Description	Transmitted by SDO		Transmitted by PDO	
				Yes / No	Connector / Parameter	Yes / No	Connector / Parameter
607Dh		software_position_limit	Software limit switch	Yes		No	-
	.0	Number of entries	Number of subindices	Yes	③	No	-
	.1	Min_position_limit	Software limit switch in negative direction	Yes	⑨ U501.12 U502 ⑩ U865.1	No	-
	.2	Max_position_limit	Software limit switch in positive direction	Yes	⑨U501.13 U502 ⑩ U865.2	No	-
6081h		profile_velocity	Positioning travel velocity	Yes	U016 ⑨ ⑩	Yes	KK3037..
6083h		profile_acceleration	Positioning acceleration	Yes	⑨ U501.18 U502 ⑩ U873.2	Yes	-
6084h		profile_deceleration	Positioning deceleration	Yes	⑨ U501.19 U502 ⑩ U873.3	Yes	-
6086h		Motion profile type	Motion profile	Yes	③	No	-
6087h		torque_slope	Torque slope	Yes	U471.1	No	-
6088h		torque profile type	Torque profile	Yes	③ ⑩	No	-
6092h		feed_constant	Feed constant	Yes	⑦ ⑨	No	-
	.0	Number of entries	Number of subindices	Yes	③	No	-
	.1	Nominal speed	Rated velocity in P205	Yes	③ ⑥	No	-
	.2	Reference speed	Reference (homing) speed	Yes	③ ⑥	No	-
6098h		homing_method	Referencing operating mode	Yes	⑧ ⑨ ⑩	No	-
6099h		homing speeds	Referencing (homing) velocity	Yes		No	-
	.0	Number of entries	Number of subindices	Yes	③	No	-
	.1	Speed_during_search _for_switch	Reference point (home position) approach velocity	Yes	⑨ U501.07 U502 ⑩ U873.1	No	-
	.2	Speed during search for_zero	Reference creep velocity	Yes	⑨ U501.06 U502	No	-
609Ah		homing acceleration	Homing acceleration	Yes	⑩ U006	No	-
60FDh		Digital_inputs	Digital inputs	Yes	⑤ ⑩	Yes	P734.5/6...
60FEh		Digital_outputs	Digital outputs	Yes	⑤ ⑩	Yes	K3033...
60FFh		target_velocity	Target velocity	Yes	U018	Yes	KK3035..
6502h		supported drive modes	Implemented traversing operating modes	Yes	③ ⑨ ⑩	No	-
67FFh		single device type	Type of part of equipment	Yes	④ ⑨	No	-

Device profile DS 401

Object index	Sub-index	Object name	Description	Transmitted by SDO		Transmitted by PDO	
				Yes / No	Connector / Parameter	Yes / No	Connector / Parameter
6FFFh		single device type	Type of part of equipment	Yes	③ ⑨	No	-
6C01h		read_analogue_input	Analog input				
	.0	number analogue inp. 16	No. of 16-bit analog inputs	Yes	③	No	-
	.1	read analogue inp. 1	Analog input 1	Yes	⑨ r637	Yes	KK011

① Entry is generated by the CBC through readout of connector K250

② Entry is generated by the CBC after parameters P711-P718 have been set

③ Value is permanently stored on the CBC

④ Entry is generated through scanning of parameter P719

⑤ Object can be transmitted as a PDO if a PDO in which this object is mapped is selected from the PDO table

⑥ Changes are stored in volatile memory on the CBC

⑦ Object not implemented as prescribed in the profile

⑧ See Subsection 8.5.7.4 "Homing mode"

⑨ Object connector or parameter available only when device codes 193 and 194 are entered in parameter P719

⑩ Object connector or parameter available only when device codes 93 and 94 are entered in parameter P719

⑪ Object connector or parameter available only when device code 0 is entered

⑫ Value is calculated as a function of the node address and stored on the CBC.

8.5.2 Commissioning the CBC

8.5.2.1 General settings

A number of settings need to be made to commission the CBC with CANopen. After the basic parameters have been assigned, the others can be set via the CAN bus using the CAN bus master or a CAN commissioning tool.

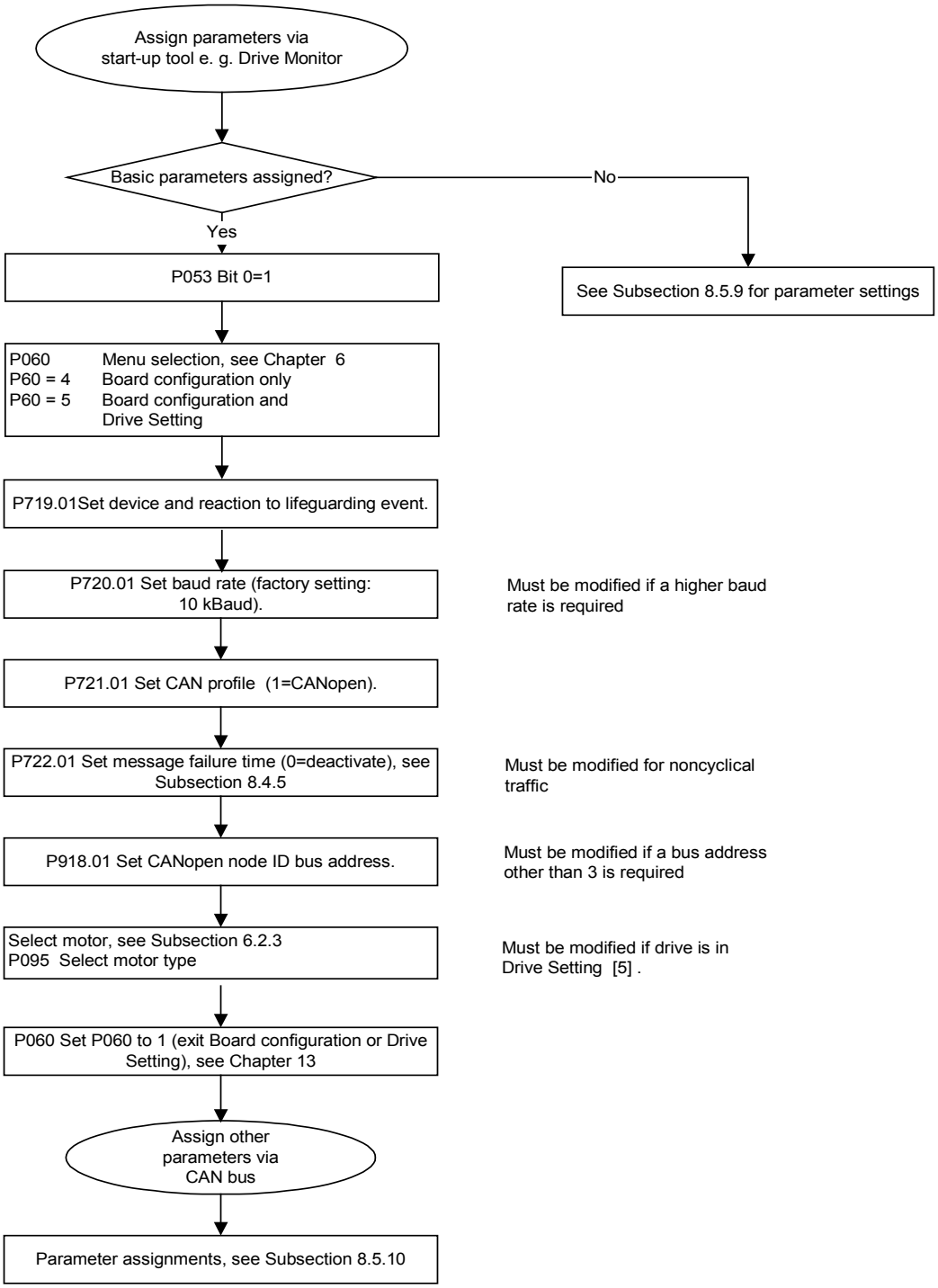

P053 (enable parameterization))
Parameter P053 (see also "Parameter List" in converter operating guide) must be set to an uneven number (e.g. 1, 3, 7 etc.). This parameter defines the sources (e.g. PMU, CBC, etc.) from which parameters may be modified. The CBC requires this enable setting to be able to execute SDO tasks. Example: P053 = 1: Parameterization enable for CBC only = 3: Parameterization enable for CBC+PMU = 7: Parameterization enable for CBC+PMU+SST1 (OP) The parameter modification enable must be set via the CBC (P053 = 1, 3 etc.) before any other parameter settings can be altered via SDO tasks from the CAN bus master.

P060 (menu selection)
P60 = 4 Select "Board configuration" function P60 = 5 Select "Board configuration and drive setting" function

P711 (R_PDO parameter 1)

Parameter for R_PDO1
The settings for Receive_PDO1 can be made with this parameter.

PDO communication is deactivated when the parameter is set to 0 (default setting).

Once the CB parameters have been input, the CBC checks the input against the table. If it detects a parameterization error, it activates error F80 when the system exits state 4 "Board configuration" or state 5 "Drive setting". The error value for the parameterization error is then stored in r732.1 (see Subsection 8.5.8.3). Once you have acknowledged the error, the system returns to the "Hardware configuration" state where you can correct the faulty parameter assignment.

The parameter comprises 8 bits for PDO number and eight bits for transmission type.

Transmission type								PDO No.							
15	14	13	12	11	10	9	8	7	6	5	4	3	2	1	0

PDOs 1-26 can be set in this parameter according to the device selected in parameter P719 from the list of Receive PDOs (Subsection 8.5.2.4). Not all PDOs can be selected in every set device. Impermissible selections are identified in the list.

The transmission type is specified in the following table:

Transmission type	PDO transmission				
	cyclic	Acyclic	synchr.	asynchr.	RTR only
0		X	X		
1-240	X		X		
241-251	reserved				
252			X		X
253				X	X
254				X	
255				X	

Example:
Receive PDO 23 must be received cyclically after every Sync object.

The PDO number must be converted to a hexadecimal value and entered in byte 0. The transmission type is entered as a hexadecimal value in byte 1 of P711.

The CB parameters acknowledge only decimal values. For this reason, the word , consisting of a high part (transmission type) and a low part (PDO No.) must be converted to a decimal number.

	High byte (transmission type)	Low byte (PDO number)
Decimal value	1	23
Hex value	1	17
Param. value	279 (117 hex)	

P712 (R_PDO parameter 2)

Parameter for R_PDO2
The settings for Receive_PDO2 can be made with this parameter.

PDO communication for PDO 2 is deactivated when the parameter is set to 0 (default setting).

Once the CB parameters have been input, the CBC checks the input against the table. If it detects a parameterization error, it activates error F80 when the system exits state 4 "Board configuration" or state 5 "Drive setting". The error value for the parameterization error is then stored in r732.1 (see Subsection 8.5.8.3). Once you have acknowledged the error, the system returns to the "Board configuration" state where you can correct the faulty parameter assignment.

The parameter comprises 8 bits for PDO number and eight bits for transmission type.

Transmission type								**PDO No.**							
15	14	13	12	11	10	9	8	7	6	5	4	3	2	1	0

PDOs 1-72 can be set in this parameter according to the device selected in parameter P719 from the list of Receive PDOs (Subsection 8.5.2.4). Not all PDOs can be selected in every set device. Impermissible selections are identified in the list.

The transmission type is specified in the following table:

Transmission type	**PDO transmission**				
	cyclic	Acyclic	synchr.	asynchr.	RTR only
0		X	X		
1-240	X		X		
241-251	Reserved				
252			X		X
253				X	
254				X	
255				X	

Receive PDO 28 must be received asynchronously.

The PDO number must be converted to a hexadecimal value and entered in byte 0. The transmission type is entered as a hexadecimal value in byte 1.

The CB parameters acknowledge only decimal values. For this reason, the word , consisting of a high part (transmission type) and a low part (PDO No.) must be converted to a decimal number.

	High byte (transmission type)	**Low byte (PDO number)**
Decimal value	255	28
Hex value	FF	1C
Param. value	65308 (FF1C hex)	

P713 (R_PDO parameter 3)

Parameter for R_PDO3
The settings for Receive_PDO3 can be made with this parameter.

PDO communication for R_PDO3 is deactivated when the parameter is set to 0 (default setting).

Once the CB parameters have been input, the CBC checks the input against the table. If it detects a parameterization error, it activates error F80 when the system exits state 4 "Board configuration" or state 5 "Drive setting". The error value for the parameterization error is then stored in r732.1 (see Subsection 8.5.8.3). Once you have acknowledged the error, the system returns to the "Board configuration" state where you can correct the faulty parameter assignment.

The settings are the same as in parameter P712.

P714 (R_PDO parameter 4)

Parameter for R_PDO4
The settings for Receive_PDO4 can be made with this parameter.

PDO communication for R_PDO4 is deactivated when the parameter is set to 0 (default setting).

Once the CB parameters have been input, the CBC checks the input against the table. If it detects a parameterization error, it activates error F80 when the system exits state 4 "Board configuration" or state 5 "Drive setting". The error value for the parameterization error is then stored in r732.1 (see Subsection 8.5.8.3). Once you have acknowledged the error, the system returns to the "Board configuration" state where you can correct the faulty parameter assignment.

The settings are the same as in parameter P712.

P715 (T_PDO parameter 1)

Parameter for T_PDO1
The settings for Transmit_PDO1 can be made with this parameter.

When the parameter is set to 0 (default setting), PDO communication is deactivated.

Once the CB parameters have been input, the CBC checks the input against the table. If it detects a parameterization error, it activates error F80 when the system exits state 4 "Board configuration" or state 5 "Drive setting". The error value for the parameterization error is then stored in r732.1 (see Subsection 8.5.8.3). Once you have acknowledged the error, the system returns to the "Board configuration" state where you can correct the faulty parameter assignment.

The parameter comprises 8 bits for PDO number and eight bits for transmission type.

Transmission type								PDO No.							
15	14	13	12	11	10	9	8	7	6	5	4	3	2	1	0

PDOs 1-22 can be set in this parameter according to the device selected in parameter P719 from the list of Transmit PDOs (Subsection 8.5.2.4). Not all PDOs can be selected in every set device. Impermissible selections are identified in the list.

The transmission type is specified in the following table:

Transmission type	PDO transmission				
	cyclic	Acyclic	synchr.	asynchr.	RTR only
0		X	X		
1-240	X		X		
241-251	reserved				
252			X		X
253				X	X
254				X	
255				X	

Example:
Receive PDO 1 must be transmitted cyclically after every Sync object.

The PDO number must be converted to a hexadecimal value and entered in byte 0. The transmission type is entered as a hexadecimal value in byte 1 in P715.

The CB parameters acknowledge only decimal values. For this reason, the word, consisting of a high part (transmission type) and a low part (PDO No.) must be converted to a decimal number.

	High byte (transmission type)	Low byte (PDO number)
Decimal value	1	1
Hex value	1	1
Param. Value	257 (101 hex)	

P716 (T_PDO parameter 2)

Parameter for T_PDO2
The settings for Transmit_PDO2 can be made with this parameter.

When the parameter is set to 0 (default setting), PDO communication is deactivated for PDO2.

Once the CB parameters have been input, the CBC checks the input against the table. If it detects a parameterization error, it activates error F80 when the system exits state 4 "Board configuration" or state 5 "Drive setting". The error value for the parameterization error is then stored in r732.1 (see Subsection 8.5.8.3). Once you have acknowledged the error, the system returns to the "Board configuration" state where you can correct the faulty parameter assignment.

The parameter comprises 8 bits for PDO number and eight bits for transmission type.

Transmission type								PDO No.							
15	14	13	12	11	10	9	8	7	6	5	4	3	2	1	0

PDOs 1-62 can be set in this parameter according to the device selected in parameter P719 from the list of Transmit PDOs (Subsection 8.5.2.4). Not all PDOs can be selected in every set device. Impermissible selections are identified in the list.

The transmission type is specified in the following table:

Transmission type	PDO transmission				
	cyclic	Acyclic	synchr.	asynchr.	RTR only
0		X	X		
1-240	X		X		
241-251	Reserved				
252			X		X
253				X	
254				X	
255				X	

Example:
Receive PDO 128 must be received asynchronously.

The PDO number must be converted to a hexadecimal value and entered in byte 0. The transmission type is entered as a hexadecimal value in byte 1 in P715.

The CB parameters acknowledge only decimal values. For this reason, the word , consisting of a high part (transmission type) and a low part (PDO No.) must be converted to a decimal number.

	High byte (transmission type)	Low byte (PDO number)
Decimal value	255	28
Hex value	FF	1C
Param. Value	65308 (FF1C hex)	

P717 (T_PDO parameter 3)

Parameter for T_PDO3
The settings for Transmit_PDO3 can be made with this parameter.

When the parameter is set to 0 (default setting), PDO communication is deactivated for PDO3.

Once the CB parameters have been input, the CBC checks the input against the table. If it detects a parameterization error, it activates error F80 when the system exits state 4 "Board configuration" or state 5 "Drive setting". The error value for the parameterization error is then stored in r732.1 (see Subsection 8.5.8.3). Once you have acknowledged the error, the system returns to the "Board configuration" state where you can correct the faulty parameter assignment.

The settings are the same as in parameter P716.

P718 (T_PDO parameter 4)

Parameter for T_PDO4
The settings for Transmit_PDO4 can be made with this parameter.

When the parameter is set to 0 (default setting), PDO communication is deactivated for PDO4.

Once the CB parameters have been input, the CBC checks the input against the table. If it detects a parameterization error, it activates error F80 when the system exits state 4 "Board configuration" or state 5 "Drive setting". The error value for the parameterization error is then stored in r732.1 (see Subsection 8.5.8.3). Once you have acknowledged the error, the system returns to the "Board configuration" state where you can correct the faulty parameter assignment.

The settings are the same as in parameter P716.

P719 (CB parameter 9)

Device on CAN bus and reaction to life guarding event
The device in which the CBC is inserted is identified to the CBC by this parameter. It also defines the reaction of the device and the CAN node.

When the parameter is set to 0 (default), the general CANopen device is selected on the CAN bus.

Drive reaction to a life guarding event (device behavior, object 6007h)				**Bus node reaction to a life guarding event (communication behavior, object 1029h Ind 1)**				**Board (device identifier)**							
15	14	13	12	11	10	9	8	7	6	5	4	3	2	1	0

Definition of device in which the CBC is inserted (device identifier):
The device in which the CBC is inserted is specified in bits 0-7. The values must be taken from the table below and entered in the low word of the parameter in hexadecimal code. This parameter must be set before PDOs are mapped in parameters P711-P718 to ensure that the CBC accesses the correct mapping table.

Board code	**Device**	**Display in object 1008h Device name**
0	General CANopen device	CANA
071	SIMOREG DC MASTER	SG 70
092 (not selectable)	MASTERDRIVES VC (CUVC)	MDVV
093	MASTERDRIVES MC	MDMC
193	MASTERDRIVES MC F01	MCF01
094	MASTERDRIVES MC Compakt Plus	MDMP
194	MASTERDRIVES MC Compakt Plus F01	MPF01

Reaction to life guarding event (communication error behavior)
The reaction of the bus node to a life guarding event must be entered in bits 8-11.

Binary value for P719 bits 8-11	**Reaction to a communication error**
0 0 0 0	Pre-operational
0 0 0 1	No state change
0 0 1 0	Stopped
0 0 1 1 – 1 1 1 1	Reserved / not permissible

Drive reaction to a life guarding event (device error behavior)
If life guarding is activated, you can configure the drive reaction to this type of event. The following table lists the options that must be entered in bits 12-15.

P719 (CB parameter 9)	
Binary value for P719 bits 12-15	**Response to life guarding event**
0 0 0 0	Remains in current state
0 0 0 1	Shutdown to ready to start
0 0 1 0	Change to Not Ready to Switch On
0 0 1 1	Quick stop to Not Ready to Switch On
0 1 0 0 - 1 1 1 1	Reserved / Not permissible

If a life guarding event occurs, the converter reacts as configured in P719. An emergency message with error code **8130** Life Guard Error is also transmitted.

If P719 is parameterized illegally, error F080 is displayed when the system exits state 4 "Board configuration" or 5 "Drive setting". Once you have acknowledged the error, the system returns to the "Board configuration" or "Drive setting" state where you can correct the faulty parameter assignment.

Example:
A MASTERDRIVES with technology option F01 must be configured as a CANopen slave. In response to a life guarding event, the drive must decelerate with OFF 1 and the bus node must not change its status. The hexadecimal value must be converted to a decimal value and entered in the parameter.

	Bit 12-15 (device behavior)	**Bit 8-11** (communication behavior)	**Bit 0-7** (device identifier)
Decimal value	1	1	193
Hex value	1	1	C1
Param. value	4545 (11C1 hex)		

P720 (CB parameter 10)

Baud rate of slave on CAN bus
This parameter sets the baud rate of the slave on the CAN bus according to the following table:

If the baud rate is outside the valid range, error F080 is displayed when the system exits state 4 "Board configuration". Once you have acknowledged the error, the system returns to the "Board configuration" state where you can correct the faulty parameter assignment.

Internal defaults for bus timing as a function of baud rate:

Parameter value	0	1	2	3	4	5	6	7	8
Baud rate [kbit/s]	10	20	50	100	125	250	500	800	1000

Baud rate	BRP	SJW	TSEG1	TSEG2	Hex value
10 kbit (P720 = 0)	39	2	15	2	2FA7
20 kbit (P720 = 1)	19	2	15	2	2F93
50 kbit (P720 = 2)	7	2	15	2	2F87
100 kbit (P720 = 3)	3	2	15	2	2F83
125 kbit (P720 = 4)	3	1	12	1	1C43
250 kbit (P720 = 5)	1	1	12	1	1C41
500 kbit (P720 = 6)	0	1	12	1	1C40
800 kbit (P720 = 7)	0	1	6	1	1640
1 MBit (P720 = 8)	0	1	4	1	1440

P721 (CB parameter 11)

Special CAN bus settings

- **Index i001:** This parameter can be set to switch between CAN layers 2=0 and 7=1 (CANopen).

P918.1 (CBC bus address)

The node address of the device on the CAN bus is set in this parameter.

The default setting is 3, thereby providing the MASTERDRIVES with a valid bus address. It can be addressed directly under node ID 3.

NOTE

After the basic parameters have been set as specified in the flowchart at the beginning of this section, other parameters can be set via the CAN bus.

8.5.2.2 NMT state

The drive switches automatically to the "Initialization" status when voltage is connected to the control board. It switches to "Pre-operational" after initialization. In the "Pre-operational" state, the drive can be configured by means of SDOs and commissioned. **It cannot receive or transmit PDOs in this state.**

The drive is switched to the "Operational" state with NMT message "Start Remote Node". The drive is fully functional in this state.

In the "Stopped" state, the drive cannot be operated via the bus. It can only be switched out of this state again by NMT message "Enter pre-operational state" (SDO only) or "Start_Remote_Node" (PDO and SDO.

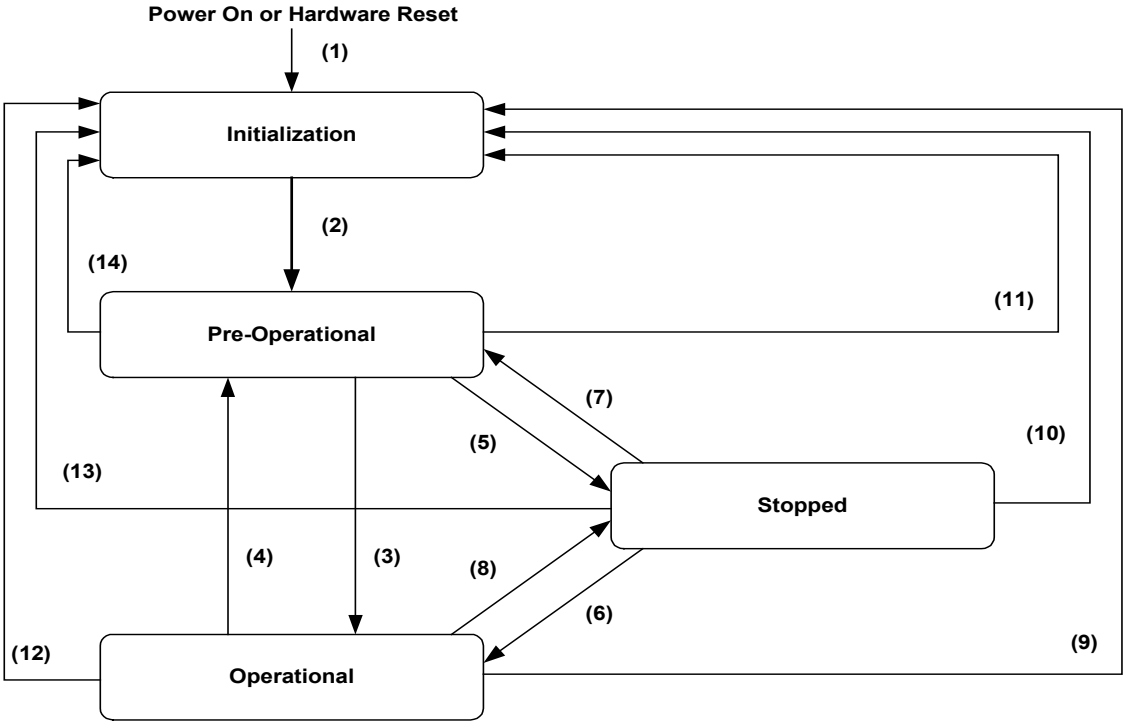

Fig. 8.5-1 State diagram of a device

(1)	The drive automatically switches to the initialization state at Power ON
(2)	Initialisation finished – enter PRE-OPERATIONAL automatically
(3), (6)	Start_Remote_Node indication
(4), (7)	Enter_PRE-OPERATIONAL_State indication
(5), (8)	Stop_Remote_Node indication
(9), (10), (11)	Reset_Node indication
(12), (13), (14)	Reset_Communication indication

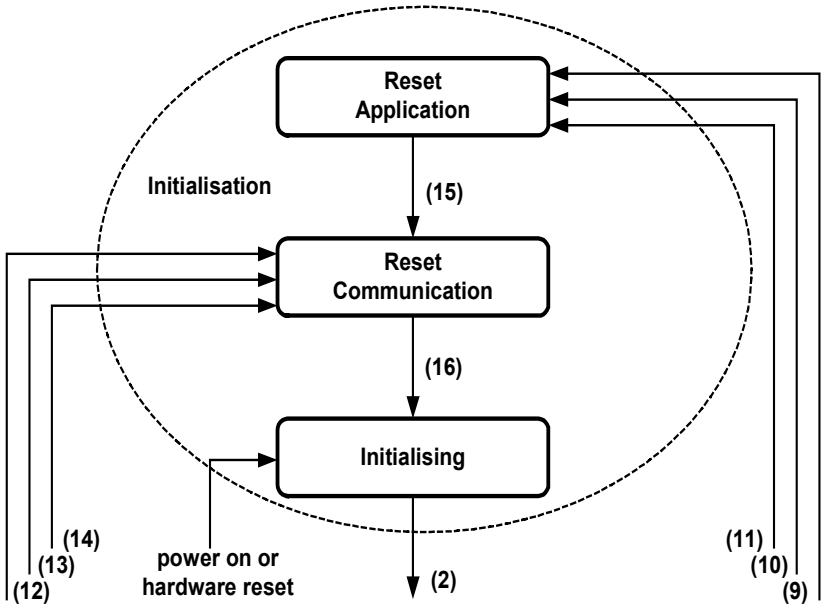

Fig. 8.5-2 Structure of the initialization state

(2)	Initialization finished – enter PRE-OPERATIONAL automatically
(12), (13), (14)	Reset_Communication indication
(9), (10), (11)	Reset_Node indication
(15)	Application Reset performed
(16)	Communication Reset performed

The pulses on the drive are disabled by an NMT command Reset Application. This causes the motor to coast to a standstill. The CBC then ceases to operate the heartbeat counter, causing activation of error F81. This is acknowledged by the CBC and the drive is then re-initialized. The re-initialization operation sets all objects specific to the manufacturer and device to the value following "Voltage On". The drive then switches to the Reset Communication state. All communication objects are reset to the default value. After initialization, the drive returns to the pre-operational state again (does not apply to general CANopen device).

	INITIALIZING	PRE-OPERATIONAL	OPERATIONAL	STOPPED
PDO			X	
SDO		X	X	
Synchronization Object			X	
Emergency Object		X	X	
Boot-Up Object	X			
Network Management Object		X	X	X

8.5.2.3 Relation between PDO/PZD and SDO/PKW

In the CANopen profile, every object can be read or written with an SDO task. This applies in the case of MASTERDRIVES only if the correct interconnections have been made. The last two columns in the table of objects specify the transmission options and the associated parameters or connectors.

MASTERDRIVES recognizes two transmission modes in connection with PROFIBUS, i.e. the PKW (parameter identifier value) task and PZD (process data).
A PKW task can be used to read or write MASTERDRIVES parameters. This type of task consists of a parameter number, a task identifier and a value.

PZD such as setpoints and actual values are updated cyclically with Profibus. Process data are 'wired' directly from the CB board to the target parameter via a dual port RAM channel. For this reason, they do not require addressing.
PZD values cannot be written by means of a PKW task nor are PZD capable of accessing parameters.
A CANopen SDO task is directly comparable to a PKW task.
PDOs correspond to PZD in the PROFIBUS.
All objects can be transmitted per SDO with CANOpen.
Fixed setpoints are used as a means of writing process data in MASTERDRIVES via an SDO task. The connectors of the fixed setpoints must be wired to the corresponding setpoint parameters.

SDO tasks

SDO tasks are sent via identifiers 600h + NodeID (Client>Server) and 580h + NodeID (Server>Client).

If you want to send a DSP 402 object as simply an SDO from the CANopen master when it corresponds to a process data in MASTERDRIVES and has not been mapped into a PDO, then it is not transmitted as normal via the dual port RAM, but diverted via a fixed setpoint. When the SDO is addressed via the parameter channel of the CBC, the setpoint is set to the possibly re-normalized value which is stored in the SDO (see table of objects, Parameters / Connectors column).

The outgoing connector for the fixed setpoint must be "wired" up to the MASTERDRIVES location to which the setpoint must be applied.

Example

The object 60FFh target_velocity may only be transmitted as an SDO via the bus. To do this, proceed as follows:

Find the fixed setpoint (U018) to which the SDO of the object writes in the table of objects. Then take the connector (KK0418) belonging to the fixed setpoint and connect it up to parameter P212 (Src Ctrl Setp).

All objects that cannot be transferred as PDOs according to the table are MASTERDRIVES parameters that can only be transmitted as SDOs.

Parameters are stored on the CBC for DSP 402 objects which supply actual values. These are read out in the case of an SDO read task. Nothing needs to be "wired up" for these.

If an object is transferred as a PDO as a result of the predefined mapping table, the value converted or processed for the MC may emerge at the connector number of the dual port RAM specified in the table. This connector must in turn be "wired" to the right location in MASTERDRIVES. If an object is mapped to a PDO and thereby transferred via the dual port RAM, then it can also be written by means of an SDO task.

CAUTION

All parameter values modified by means of profile-specific objects are saved only to the RAM in MASTERDRIVES. If the control board of the MASTERDRIVES system is disconnected from the supply voltage, the values from the EEPROM are stored in the parameters and in the relevant objects when the supply is connected again. The R_PDO values are all set to zero.

To restore the object values as they were before the supply was disconnected, the objects must be written with their PDO or SDO tasks.

SDO aborts

Some objects are linked to parameters in the MASTERDRIVES. The CBC uses a parameter task to read or write them.

However, some parameters can be written only when the converter is in particular states.

If you want write an object that is linked to a parameter that can only be written in the "ready to start" state during operation via the CAN bus, an SDO abort is returned in response to the SDO task. The different SDO aborts are described in the following table.

Abort name	Abortcode	Reason (PKW error values)	Description
SERVICE_ERR	0x08000022	Response identifier (7) Task cannot be executed (with error number) Error number (17) Task cannot be executed in current operating status	Currently issued task cannot be executed in active converter state.
UNSUP_ACC	0x06010000	SDO access to a free object that is not mapped to a PDO Write access to objects that are read only or read access to objects that are write only With parameter tasks Response identifier (7) Task cannot be executed (with error number) Error number (1) Parameter value cannot be modified (6) Setting not permitted (resetting only) (7) Descriptive element cannot be modified (15) Text array does not exist (102) Channel width too small (106) Task not implemented (107) Text cannot be modified	The free object does not exist in the object directory until it has been mapped to a PDO. If the parameter is a visualization parameter Basically impossible for MASTERDRIVES Specific to MASTERDRIVES: For PKW short channels only
VAL_RANGE_EXC	0x06090030	Response identifier (7) Task cannot be executed (with error number) Error number (2) Lower or upper value limit exceeded	Parameter limits exceeded

Abort name	Abortcode	Reason (PKW error values)	Description
General Error	0x08000000	Incorrect parameter states: Parameter check buffer or parameter status buffer, in both directions New parameter task sent before response to previous task had been received	
DATA_TRANSFER_ ERR	0x08000020	All other PKW errors Response identifier (7) Task cannot be executed	For all other PKW errors, see Errors, PKW task table.
Data cannot be transferred or stored to the application because of local control	0x08000021	Response identifier (7) Task cannot be executed Error number (11) No control command source status (12) Keyword missing (101) Parameter number currently deactivated Response identifier (8) Control command source status not assigned to PKW interface	Device parameters: Access key and/or param. special access not appropriately set Specific to MASTERDRIVES
Data type does not match, length of service parameter does not match, service parameter too high or too low	0x06070010	Response identifier (7) Task cannot be executed Error number (5) Incorrect data type	On access to a MASTERDRIVES word parameter with a double word identifier and vice versa
Sub-Index does not exist	0x06090011	SDO access to a non-existent subindex of an object Response identifier (7) Task cannot be executed Error number (3) Errored subindex (4) No array	On access to a MASTERDRIVES parameter
Data type does not match, length of service parameter too high	0x06070012	Attempt to write an excessively high value to an SDO	
Data type does not match, length of service parameter too low	0x06070013	Attempt to write an excessively low value to an SDO	

Abort name	Abortcode	Reason (PKW error values)	Description
Toggle Bit not alternated	0x05030000	Toggle bit is not toggled with a nonexpedited transfer.	
SDO protocol timed out	0x05040000		The MASTERDRIVES has not responded to a transmitted parameter task within 150 ms. The CBC aborts the parameter task and signals an abort
Object does not exist in the object dictionary	0x06020000	Access to a non-existent object Response identifier (7) Task cannot be executed Error number (0) Illegal parameter number	Access to a non-existent MASTERDRIVES parameter
General parameter incompatibility reason	0x06040043	Response identifier (7) Task cannot be executed Error number (104) Illegal parameter value	MASTERDRIVES-specific

8.5.2.4 PDO mapping

PDO mapping is possible only to a limited extent in MASTERDRIVES. The following table lists all the available premapped PDOs. Free mapping as described in CANopen cannot be implemented with the CBC and CANopen.

The mapped objects are stored in objects 1600h-1603h and 1A00h-1A03h and can be read out via the CAN bus.

CAUTION

The manufacturer-specific free objects 3xxxh can be addressed via an SDO only if they have been mapped to the dual port RAM as a PDO!

How to map PDOs

To be able to enter values in parameters P711-P718, the MASTERDRIVES must be switched to Drive Setting (P060 = 5) or Board Configuration (P060 = 4).

Search through the table until you find the most suitable premapped PDO for your application. The first column contains a number. Enter this number, for example, in parameter P711, byte 0, as a hexadecimal value. Enter the CANopen value for the PDO transmission (Transmission Type) in byte 1, also as a hexadecimal value. This value must now be converted to a decimal number since MASTERDRIVES permits only decimal CB values.

Please note that certain PDOs can only be entered in particular parameters. The selectable parameters are listed in the last column of the table. The first PDO must always contain the control word. A special interconnection specification, which is shown in the block diagrams (Subsection 8.5.12), has been defined for this purpose.

Once the CBC parameters have been set, the values of the receive PDOs must be "wired up" to the correct MASTERDRIVES location via the CBC receive connectors.

The connectors with the values for the PDOs must be wired to the correct location in the dual port RAM for the send data (P734).

PDOs which are parameterized in P711 and P715 can also be parameterized in P712-14 and P716-18. It is therefore possible to send a control word by two different transmission modes, for example, cyclical and asynchronous.

NOTE

The values of the objects are only ever transferred to one connector. Objects mapped as PDOs have priority, i.e. if an object is mapped to a PDO, the value is transferred to CB receive parameter K3xxx or KK3xxx, even if the object has been transferred as an SDO task. The U parameter that would be addressed without PDO mapping is not written in this instance.
If an object is written to two PDOs, as described above, the object value is transferred to the receive word mapped to the parameter with the lower number.

Table of receive PDOs

R_PDO No.	Mapping object index	Mapping object name	DPR connector	R_PDO number in DPR	R_PDO identifier	When selected enter in parameters
1	6040h	Controlword	K3001	1	200h+NodeID	711/712/713/714
2	6040h 6060h	Controlword Modes of operation	K3001 K3002	1	200h+NodeID	711/712/713/714
3 ① ②	6040h 607Ah	Controlword Target_position	K3001 K3033	1	200h+NodeID	711/712/713/714
4 ① ②	6040h 60FFh	Controlword Target_velocity	K3001 K3033	1	200h+NodeID	711/712/713/714
5 ②	6040h 6071h	Controlword Target_torque	K3001 K3003	1	200h+NodeID	711/712/713/714
6		Reserve				
7 ②	6040h 60FEh	Controlword Digital_outputs	K3001 KK3033	1	200h+NodeID	711/712/713/714
8-21		Reserve				
18 ①	6040h 4040h	Controlword Technology Controlword	K3001 K3002/3003	1	200h+NodeID	711/712/713/714
19 ①	6040h 6060h 4040h	Controlword Modes of Operation Technology Controlword	K3001 K3002 KK3033	1	200h+NodeID	711/712/713/714
20 ③	6040h 6060h 3001h 3002h	Controlword Modes of Operation Free object 3001h 16 Bit Free object 3002h 16 Bit	K3001 K3002 K3003 K3004	1	200h+NodeID	711/712/713/714
21 ③	6040h 3001h	Controlword Free object 3001h 16 Bit	K3001 K3003	1	200h+NodeID	711/712/713/714
22	6040h 3001h 3002h	Controlword Free object 3001h/16 Bit Free object 3002h/16 Bit	K3001 K3003 K3004	1	200h+NodeID	711/712/713/714
23	6040h 3020h	Controlword Free object 3020h/32 Bit	K3001 K3033	1	200h+NodeID	711/712/713/714

R_PDO No.	Mapping object index	Mapping object name	DPR connector	R_PDO number in DPR	R_PDO identifier	When selected enter in parameters
24	6040h 6060h 3001h	Controlword Modes_of_operation Free object 3001h 16 Bit	K3001 K3002 K3003	1	200h+NodeID	711/712/713/714
25	6040h 6060h 3020h	Controlword Modes_of_operation Free object 3020h 32 Bit	K3001 K3002 K3033	1	200h+NodeID	711/712/713/714
26 ① ②	6040h 6081h	Controlword Profile Velocity	K3001 K3033	1	200h+NodeID	711/712/713/714
27 ① ②	60FFh	Target_velocity	K3035 K3039 K3043	2 3 4	300h+NodeID 400h+NodeID 500h+NodeID	712 713 714
28 ① ②	60FFh 3003h	Target_velocity Free object 3003h/16 Bit	K3035/K3039/ K3043 K3007/K3011/ K3015	2 3 4	300h+NodeID 400h+NodeID 500h+NodeID	712 713 714
29 ① ②	60FFh 3003h 3004h	Target_velocity Free object 3003h/16 Bit Free object 3004h/16 Bit	K3035/K3039/ K3043 K3007/K3011/ K3015 K3008/K30012/ K3016	2 3 4	300h+NodeID 400h+NodeID 500h+NodeID	712 713 714
30 ① ②	60FFh 3021h	Target_velocity Free object 3021h/32 Bit	K3035/K3039/ K3043 K3037/3041/ K3045	2 3 4	300h+NodeID 400h+NodeID 500h+NodeID	712 713 714
31 ① ②	607Ah	Target_position	K3035/K3039/ K3043	2 3 4	300h+NodeID 400h+NodeID 500h+NodeID	712 713 714
32 ① ②	607Ah 6081h	Target_position Profile_velocity	K3035/K3039/ K3043 K3037/K3041/ K3045	2 3 4	300h+NodeID 400h+NodeID 500h+NodeID	712 713 714
33 ① ②	607Ah 3005h	Target_position Free object 3005h/16 Bit	K3035/K3039/ K3043 K3007/K3011/ K3015	2 3 4	300h+NodeID 400h+NodeID 500h+NodeID	712 713 714
34 ① ②	607Ah 3005h 3006h	Target_position Free object 3005h/16 Bit Free object 3006h/16 Bit	K3035/K3039/ K3043 K3007/K3011/ K3015 K3008/K3012/ K3016	2 3 4	300h+NodeID 400h+NodeID 500h+NodeID	712 713 714

R_PDO No.	Mapping object index	Mapping object name	DPR connector	R_PDO number in DPR	R_PDO identifier	When selected enter in parameters
35 ① ②	607Ah 3022h	Target_position Free object 3022h/32 Bit	K3035/K3039/ K3043 K3037/K3041/ K3045	2 3 4	300h+NodeID 400h+NodeID 500h+NodeID	712 713 714
36 ① ②	6081h	Profile_velocity	K3035/K3039/ K3043	2 3 4	300h+NodeID 400h+NodeID 500h+NodeID	712 713 714
37 ① ②	6081h 3007h	Profile_velocity Free object 3007h/16 Bit	K3035/K3039/ K3043 K3007/K3011/ K3015	2 3 4	300h+NodeID 400h+NodeID 500h+NodeID	712 713 714
38 ① ②	6081h 3007h 3008h	Profile_velocity Free object 3007h/16 Bit Free object 3008h/16 Bit	K3035/K3039/ K3043 K3007/K3011/ K3015 K3008/K3012/ K3016	2 3 4	300h+NodeID 400h+NodeID 500h+NodeID	712 713 714
39 ① ②	6081h 3023h	Profile_velocity Free object 30023h/32 Bit	K3035/K3039/ K3043 K3037/K3041/ K3045	2 3 4	300h+NodeID 400h+NodeID 500h+NodeID	712 713 714
40 ②	6083h 6084h	Profile acceleration Profile deceleration	K3005/..9/..13 K3007/..11/..15	2 3 4	300h+NodeID 400h+NodeID 500h+NodeID	712 713 714
41	3009h	Free object 3009h/16 Bit	K3005/K3009/ K3013	2 3 4	300h+NodeID 400h+NodeID 500h+NodeID	712 713 714
42	3009h 300Ah	Free object 3009h/16 Bit Free object 300Ah/16 Bit	K3005/K3009/ K3013 K3006/K3010/ K3014	2 3 4	300h+NodeID 400h+NodeID 500h+NodeID	712 713 714
43	3009h 300Ah 300Bh	Free object 3009h/16 Bit Free object 300Ah/16 Bit Free object 300Bh/16 Bit	K3005/K3009/ K3013 K3006/K3010/ K3014 K3007/K3011/ K3015	2 3 4	300h+NodeID 400h+NodeID 500h+NodeID	712 713 714

R_PDO No.	Mapping object index	Mapping object name	DPR connector	R_PDO number in DPR	R_PDO identifier	When selected enter in parameters
44	3009h 300Ah 300Bh 300Ch	Free object 3009h/16 Bit Free object 300Ah/16 Bit Free object 300Bh/16 Bit Free object 300Ch/16 Bit	K3005/K3009/ K3013 K3006/K3010/ K3014 K3007/K3011/ K3015 K3008/K3012/ K3016	2 3 4	300h+NodeID 400h+NodeID 500h+NodeID	712 713 714
45	3024h	Free object 3024h/32 Bit	K3035/K3039/ K3043	2 3 4	300h+NodeID 400h+NodeID 500h+NodeID	712 713 714
46	3024h 300Bh	Free object 3024h/32 Bit Free object 300Bh/16 Bit	K3035/K3039/ K3043 K3007/K3011/ K3015	2 3 4	300h+NodeID 400h+NodeID 500h+NodeID	712 713 714
47	3024h 300Bh 300Ch	Free object 3024h/32 Bit Free object 300Bh/16 Bit Free object 300Ch/16 Bit	K3035/K3039/ K3043 K3007/K3011/ K3015 K3008/K3012/ K3016	2 3 4	300h+NodeID 400h+NodeID 500h+NodeID	712 713 714
48	3024h 3025h	Free object 3024h/32 Bit Free object 3025h/32 Bit	K3035/K3039/ K3043 K3037/K3041/ K3045	2 3 4	300h+NodeID 400h+NodeID 500h+NodeID	712 713 714
49	300Dh	Free object 300Dh/16 Bit	K3005/K3009/ K3013	2 3 4	300h+NodeID 400h+NodeID 500h+NodeID	712 713 714
50	300Dh 300Eh	Free object 300Dh/16 Bit Free object 300Eh/16 Bit	K3005/K3009/ K3013 K3006/K3010/ K3014	2 3 4	300h+NodeID 400h+NodeID 500h+NodeID	712 713 714
51	300Dh 300Eh 300Fh	Free object 300Dh/16 Bit Free object 300Eh/16 Bit Free object 300Fh/16 Bit	K3005/K3009/ K3013 K3006/K3010/ K3014 K3007/K3011/ K3015	2 3 4	300h+NodeID 400h+NodeID 500h+NodeID	712 713 714

R_PDO No.	Mapping object index	Mapping object name	DPR connector	R_PDO number in DPR	R_PDO identifier	When selected enter in parameters
52	300Dh 300Eh 300Fh 3010h	Free object 300Dh/16 Bit Free object 300Eh/16 Bit Free object 300Fh/16 Bit Free object 3010h/16 Bit	K3005/K3009/ K3013 K3006/K3010/ K3014 K3007/K3011/ K3015 K3008/K3012/ K3016	2 3 4	300h+NodeID 400h+NodeID 500h+NodeID	712 713 714
53	3026h	Free object 3026h/32 Bit	K3035/K3039/ K3043	2 3 4	300h+NodeID 400h+NodeID 500h+NodeID	712 713 714
54	3026h 300Fh	Free object 3026h/32 Bit Free object 300Fh/16 Bit	K3035/K3039/ K3043 K3007/K3011/ K3015	2 3 4	300h+NodeID 400h+NodeID 500h+NodeID	712 713 714
55	3026h 300Fh 3010h	Free object 3026h/32 Bit Free object 300Fh/16 Bit Free object 3010h/16 Bit	K3035/K3039/ K3043 K3007/K3011/ K3015 K3008/K3012/ K3016	2 3 4	300h+NodeID 400h+NodeID 500h+NodeID	712 713 714
56	3026h 3027h	Free object 3026h/32 Bit Free object 3027h/32 Bit	K3035/K3039/ K3043 K3037/K3041/ K3045	2 3 4	300h+NodeID 400h+NodeID 500h+NodeID	712 713 714
57 ① ②	2002.01h 2002.02h	Gear ratio numerator Gear ratio denominator	K3005/K3009/ K3013 K3006/K3010/ K3014	2 3 4	300h+NodeID 400h+NodeID 500h+NodeID	712 713 714
58 ②	6071h	Target torque	K3005/ K3009/ K3013	2 3 4	300h+NodeID 400h+NodeID 500h+NodeID	712 713 714
59 ②	6071h 3011h	Target torque Free object 3011h 16 Bit	K3005/ K3009/ K3013 K3006/ K3010/ K3014	2 3 4	300h+NodeID 400h+NodeID 500h+NodeID	712 713 714
60 ②	6071h 3011h 3012h	Target torque Free object 3011h 16 Bit Free object 3012h 16 Bit	K3005/ K3009/ K3013 K3006/ K3010/ K3014 K3007/ K3011/ K3015	2 3 4	300h+NodeID 400h+NodeID 500h+NodeID	712 713 714

R_PDO No.	Mapping object index	Mapping object name	DPR connector	R_PDO number in DPR	R_PDO identifier	When selected enter in parameters
61 ②	6071h 3011h 3012h 3013h	Target torque Free object 3011h 16 Bit Free object 3012h 16 Bit Free object 3013h 16 Bit	K3005/ K3009/ K3013 K3006/ K3010/ K3014 K3007/ K3011/ K3015 K3008/ K3012/ K3016	2 3 4	300h+NodeID 400h+NodeID 500h+NodeID	712 713 714
62 ②	6071h 3028h	Target torque Free object 3028h 32 Bit	K3005/ K3009/ K3013 KK3036/ KK3040/ KK3044	2 3 4	300h+NodeID 400h+NodeID 500h+NodeID	712 713 714
63 ②	6071h 3028h 3014h	Target torque Free object 3028h 32 Bit Free object 3014h 16 Bit	K3005/ K3009/ K3013 KK3036/ KK3040/ KK3044 K3008/ K3012/ K3016	2 3 4	300h+NodeID 400h+NodeID 500h+NodeID	712 713 714
64 ②	60FEh	Digital outputs	KK3035/ KK3039/ KK3043	2 3 4	300h+NodeID 400h+NodeID 500h+NodeID	712 713 714
65 ③	3015h	Free object 3015h/16 Bit	K3005/K3009/ K3013	2 3 4	300h+NodeID 400h+NodeID 500h+NodeID	712 713 714
66 ③	3015h 3016h	Free object 3015h/16 Bit Free object 3016h/16 Bit	K3005/K3009/ K3013 K3006/K3010/ K3014	2 3 4	300h+NodeID 400h+NodeID 500h+NodeID	712 713 714
67 ③	3015h 3016h 3017h	Free object 3015h/16 Bit Free object 3016h/16 Bit Free object 3017h/16 Bit	K3005/K3009/ K3013 K3006/K3010/ K3014 K3007/K3011/ K3015	2 3 4	300h+NodeID 400h+NodeID 500h+NodeID	712 713 714
68 ③	3015h 3016h 3017h 3018h	Free object 3015h/16 Bit Free object 3016h/16 Bit Free object 3017h/16 Bit Free object 3018h/16 Bit	K3005/K3009/ K3013 K3006/K3010/ K3014 K3007/K3011/ K3015 K3008/K3012/ K3016	2 3 4	300h+NodeID 400h+NodeID 500h+NodeID	712 713 714

R_PDO No.	Mapping object index	Mapping object name	DPR connector	R_PDO number in DPR	R_PDO identifier	When selected enter in parameters
69 ③	3029h	Free object 3029h/32 Bit	K3035/K3039/ K3043	2 3 4	300h+NodeID 400h+NodeID 500h+NodeID	712 713 714
70 ③	3029h 3017h	Free object 3029h/32 Bit Free object 3017h/16 Bit	K3035/K3039/ K3043 K3007/K3011/ K3015	2 3 4	300h+NodeID 400h+NodeID 500h+NodeID	712 713 714
71 ③	3029h 3017h 3018h	Free object 3026h/32 Bit Free object 3017h/16 Bit Free object 3018h/16 Bit	K3035/K3039/ K3043 K3007/K3011/ K3015 K3008/K3012/ K3016	2 3 4	300h+NodeID 400h+NodeID 500h+NodeID	712 713 714
72 ③	3029h 302Ah	Free object 3029h/32 Bit Free object 302Ah/32 Bit	K3035/K3039/ K3043 K3037/K3041/ K3045	2 3 4	300h+NodeID 400h+NodeID 500h+NodeID	712 713 714

① PDO can be selected only when device codes 193 and 194 are entered in parameter P719

② PDO can be selected only when device codes 93 and 94 are entered in parameter P719

③ PDO can be selected only when device code 0 is entered in parameter P719

Table of transmit PDOs

T_PDO No.	Mapping object index	Mapping object name	DPR parameter	T_PDO number in DPR	T_PDO identifier	When selected enter in parameters
1	6041h	Statusword	P734.01-0.4	1	180h+NodeID	715/716/717/ 718
2	6041h 6061h	Statusword Modes_of_operation _display	P734.01-04	1	180h+NodeID	715/716/717/ 718
3 ③	6041h 3101h	Statusword Free object 3107h 16 Bit	P734.01 P734.03	1	180h+NodeID	715/716/717/ 718
4 ③	6041h 6061h 3101h	Statusword Modes of operation display Free object 3107h 16 Bit	P734.01 P734.02 P734.03	1	180h+NodeID	715/716/717/ 718
5-20		Reserve				

T_PDO No.	Mapping object index	Mapping object name	DPR parameter	T_PDO number in DPR	T_PDO identifier	When selected enter in parameters
21	6041h 4061h	Statusword technology statusword	P734.01-04	1	180h+NodeID	715/716/717/ 718
22	6041h 6061h 4041	Statusword Modes_of_operation _display technology statusword	P734.01-04	1	180h+NodeID	715/716/717/ 718
23 ① ②	606Ch	Velocity actual value	P734.05/.06 P734.09/.10 P734.13/.14	2 3 4	280h+NodeID 380h+NodeID 480h+NodeID	716 717 718
24 ① ②	606Ch 3103h	Velocity actual value Free object 3103h 16 Bit	P734.05/.06 P734.09/.10 P734.13/.14 P734.07 P734.11 P734.15	2 3 4	280h+NodeID 380h+NodeID 480h+NodeID	716 717 718
25 ① ②	606Ch 3103h 3104h	Velocity actual value Free object 3103h 16 Bit Free object 3104h 16 Bit	P734.05/.06 P734.09/.10 P734.13/.14 P734.07 P734.11 P734.15 P734.08 P734.12 P734.16	2 3 4	280h+NodeID 380h+NodeID 480h+NodeID	716 717 718
26 ① ②	606Ch 3121h	Velocity actual value Free object 3121h 32 Bit	P734.05/.06 P734.09/.10 P734.13/.14 P734.07/.08 P734.11/.12 P734.15/.16	2 3 4	280h+NodeID 380h+NodeID 480h+NodeID	716 717 718
27 ① ②	6064h	Position actual value	P734.05/.06 P734.09/.10 P734.13/.14	2 3 4	280h+NodeID 380h+NodeID 480h+NodeID	716 717 718
28 ① ②	6064h 3105h	Position actual value Free object 3105h16 Bit	P734.05/.06 P734.09/.10 P734.13/.14 P734.07 P734.11 P734.15	2 3 4	280h+NodeID 380h+NodeID 480h+NodeID	716 717 718
29 ①	6064h 6C01h	Position actual value Read Analog Input	P734.05/.06 P734.09/.10 P734.13/.14 P734.07 P734.11 P734.15	2 3 4	280h+NodeID 380h+NodeID 480h+NodeID	716 717 718

T_PDO No.	Mapping object index	Mapping object name	DPR parameter	T_PDO number in DPR	T_PDO identifier	When selected enter in parameters
30 ① ②	6064h 3105h 3106h	Position actual value Free object 3105h 16 Bit Free object 3106h 16 Bit	P734.05/.06 P734.09/.10 P734.13/.14 P734.07 P734.11 P734.15 P734.08 P734.12 P734.16	2 3 4	280h+NodeID 380h+NodeID 480h+NodeID	716 717 718
31 ① ②	6064h 3122h	Position actual value Free object 3122h 32 Bit	P734.05/.06 P734.09/.10 P734.13/.14 P734.07/.08 P734.11/.12 P734.15/.16	2 3 4	280h+NodeID 380h+NodeID 480h+NodeID	716 717 718
32	3107h	Free object 3107h 16 Bit	P734.05 P734.09 P734.13	2 3 4	280h+NodeID 380h+NodeID 480h+NodeID	716 717 718
33	3107h 3108h	Free object 3107h 16 Bit Free object 3108h 16 Bit	P734.05 P734.09 P734.13 P734.06 P734.10 P734.14	2 3 4	280h+NodeID 380h+NodeID 480h+NodeID	716 717 718
34	3107h 3108h 3109h	Free object 3107h 16 Bit Free object 3108h 16 Bit Free object 3109h 16 Bit	P734.05 P734.09 P734.13 P734.06 P734.10 P734.14 P734.07 P734.11 P734.15	2 3 4	280h+NodeID 380h+NodeID 480h+NodeID	716 717 718
35	3107h 3108h 3109h 310Ah	Free object 3107h 16 Bit Free object 3108h 16 Bit Free object 3109h 16 Bit Free object 310Ah 16 Bit	P734.05 P734.09 P734.13 P734.06 P734.10 P734.14 P734.07 P734.11 P734.15 P734.08 P734.12 P734.16	2 3 4	280h+NodeID 380h+NodeID 480h+NodeID	716 717 718
36	3123h	Free object 3123h 32 Bit	P734.05/.06 P734.09/.10 P734.13/.14	2 3 4	280h+NodeID 380h+NodeID 480h+NodeID	716 717 718

T_PDO No.	Mapping object index	Mapping object name	DPR parameter	T_PDO number in DPR	T_PDO identifier	When selected enter in parameters
37	3123h 3109h	Free object 3123h 32 Bit Free object 3109h 16 Bit	P734.05/.06 P734.09/.10 P734.13/.14 P734.07 P734.11 P734.15	2 3 4	280h+NodeID 380h+NodeID 480h+NodeID	716 717 718
38	3123h 3109h 310Ah	Free object 3123h 32 Bit Free object 3109h 16 Bit Free object 310Ah 16 Bit	P734.05/.06 P734.09/.10 P734.13/.14 P734.07 P734.11 P734.15 P734.08 P734.12 P734.16	2 3 4	280h+NodeID 380h+NodeID 480h+NodeID	716 717 718
39	3123h 3124h	Free object 3123h 32 Bit Free object 3124h 32 Bit	P734.05/.06 P734.09/.10 P734.13/.14 P734.07/.08 P734.11/.12 P734.15/.16	2 3 4	280h+NodeID 380h+NodeID 480h+NodeID	716 717 718
40	310Bh	Free object 310Bh 16 Bit	P734.05 P734.09 P734.13	2 3 4	280h+NodeID 380h+NodeID 480h+NodeID	716 717 718
41	310Bh 310Ch	Free object 310Bh 16 Bit Free object 310Ch 16 Bit	P734.05 P734.09 P734.13 P734.06 P734.10 P734.14	2 3 4	280h+NodeID 380h+NodeID 480h+NodeID	716 717 718
42	310Bh 310Ch 310Dh	Free object 310Bh 16 Bit Free object 310Ch 16 Bit Free object 310Dh 16 Bit	P734.05 P734.09 P734.13 P734.06 P734.10 P734.14 P734.07 P734.11 P734.15	2 3 4	280h+NodeID 380h+NodeID 480h+NodeID	716 717 718
43	310Bh 310Ch 310Dh 310Eh	Free object 310Bh 16 Bit Free object 310Ch 16 Bit Free object 310Dh 16 Bit Free object 310Eh 16 Bit	P734.05 P734.09 P734.13 P734.06 P734.10 P734.14 P734.07 P734.11 P734.15 P734.08 P734.12 P734.16	2 3 4	280h+NodeID 380h+NodeID 480h+NodeID	716 717 718

T_PDO No.	Mapping object index	Mapping object name	DPR parameter	T_PDO number in DPR	T_PDO identifier	When selected enter in parameters
44	3125h	Free object 3125h 32 Bit	P734.05/.06 P734.09/.10 P734.13/.14	2 3 4	280h+NodeID 380h+NodeID 480h+NodeID	716 717 718
45	3125h 310Dh	Free object 3125h 32 Bit Free object 310Dh 16 Bit	P734.05/.06 P734.09/.10 P734.13/.14 P734.07 P734.11 P734.15	2 3 4	280h+NodeID 380h+NodeID 480h+NodeID	716 717 718
46	3125h 310Dh 310Eh	Free object 3125h 32 Bit Free object 310Dh 16 Bit Free object 310Eh 16 Bit	P734.05/.06 P734.09/.10 P734.13/.14 P734.07 P734.11 P734.15 P734.08 P734.12 P734.16	2 3 4	280h+NodeID 380h+NodeID 480h+NodeID	716 717 718
47	3125h 3126h	Free object 3125h 32 Bit Free object 3126h 32 Bit	P734.05/.06 P734.09/.10 P734.13/.14 P734.07/.08 P734.11/.12 P734.15/.16	2 3 4	280h+NodeID 380h+NodeID 480h+NodeID	716 717 718
48 ②	6077h 310Fh	Torque actual value	P734.5 P734.9 P734.13	2 3 4	280h+NodeID 380h+NodeID 480h+NodeID	716 717 718
49 ②	6077h 310Fh	Torque actual value Free object 310F 16 Bit	P734.5 P734.9 P734.13 P734.6 P734.10 P734.14	2 3 4	280h+NodeID 380h+NodeID 480h+NodeID	716 717 718
50 ②	6077h 310Fh 3110h	Torque actual value Free object 310F 16 Bit Free object 3110 16 Bit	P734.5 P734.9 P734.13 P734.6 P734.10 P734.14 P734.7 P734.11 P734.15	2 3 4	280h+NodeID 380h+NodeID 480h+NodeID	716 717 718

T_PDO No.	Mapping object index	Mapping object name	DPR parameter	T_PDO number in DPR	T_PDO identifier	When selected enter in parameters
51 ②	6077h 310Fh 3110h 3111h	Torque actual value Free object 310F 16 Bit Free object 3110 16 Bit Free object 3111 16 Bit	P734.5 P734.9 P734.13 P734.6 P734.10 P734.14 P734.7 P734.11 P734.15 P734.8 P734.12 P734.16	2 3 4	280h+NodeID 380h+NodeID 480h+NodeID	716 717 718
52 ②	6077h 3127h	Torque actual value Free object 3127 32 Bit	P734.5 P734.9 P73413 P734.6/.7 P734.10/.11 P734.14/.15	2 3 4	280h+NodeID 380h+NodeID 480h+NodeID	716 717 718
53 ②	6077h 3127h 3111h	Torque actual value Free object 3127 32 Bit Free object 3111 16 Bit	P734.5 P734.9 P734.13 P734.6/.7 P734.10/.11 P734.14/15 P734.8 P734.12 P734.16	2 3 4	280h+NodeID 380h+NodeID 480h+NodeID	716 717 718
54 ②	60FDh	Digital inputs	P734.5/.6 P734.9/.10 P734.13/.14	2 3 4	280h+NodeID 380h+NodeID 480h+NodeID	716 717 718
55 ③	3112h	Free object 3112h 16 Bit	P734.05 P734.09 P734.13	2 3 4	280h+NodeID 380h+NodeID 480h+NodeID	716 717 718
56 ③	3112h 3113h	Free object 3112h 16 Bit Free object 3113h 16 Bit	P734.05 P734.09 P734.13 P734.06 P734.10 P734.14	2 3 4	280h+NodeID 380h+NodeID 480h+NodeID	716 717 718
57 ③	3112h 3113h 3114h	Free object 3112h 16 Bit Free object 3113h 16 Bit Free object 3114h 16 Bit	P734.05 P734.09 P734.13 P734.06 P734.10 P734.14 P734.07 P734.11 P734.15	2 3 4	280h+NodeID 380h+NodeID 480h+NodeID	716 717 718

T_PDO No.	Mapping object index	Mapping object name	DPR parameter	T_PDO number in DPR	T_PDO identifier	When selected enter in parameters
58 ③	3112h 3113h 3114h 3115h	Free object 3112h 16 Bit Free object 3113h 16 Bit Free object 3114h 16 Bit Free object 3115h 16 Bit	P734.05 P734.09 P734.13 P734.06 P734.10 P734.14 P734.07 P734.11 P734.15 P734.08 P734.12 P734.16	2 3 4	280h+NodeID 380h+NodeID 480h+NodeID	716 717 718
59	3128h	Free object 3128h 32 Bit	P734.05/.06 P734.09/.10 P734.13/.14	2 3 4	280h+NodeID 380h+NodeID 480h+NodeID	716 717 718
60 ③	3128h 3114h	Free object 3128h 32 Bit Free object 3114h 16 Bit	P734.05/.06 P734.09/.10 P734.13/.14 P734.07 P734.11 P734.15	2 3 4	280h+NodeID 380h+NodeID 480h+NodeID	716 717 718
61 ③	3128h 3114h 3115h	Free object 3128h 32 Bit Free object 3114h 16 Bit Free object 3115h 16 Bit	P734.05/.06 P734.09/.10 P734.13/.14 P734.07 P734.11 P734.15 P734.08 P734.12 P734.16	2 3 4	280h+NodeID 380h+NodeID 480h+NodeID	716 717 718
62 ③	3128h 3129h	Free object 3129h 32 Bit Free object 3128h 32 Bit	P734.05/.06 P734.09/.10 P734.13/.14 P734.07/.08 P734.11/.12 P734.15/.16	2 3 4	280h+NodeID 380h+NodeID 480h+NodeID	716 717 718

① PDO can be selected only when device codes 193 and 194 are entered in parameter P719

② PDO can be selected only when device codes 93 and 94 are entered in parameter P719

③ PDO can be selected only when device code 0 is entered in parameter P719

8.5.3 Manufacturer-specific objects

8.5.3.1 Parameter editing

There are two different methods by which parameters in the MASTERDRIVES can be read or written via the CAN bus.

- One option involves utilizing the complete PKW channel (parameter identifier value) with object 4001h. To do this, however, you must be familiar with the parameter editing principles of the MASTERDRIVES.
- A simpler parameterization interface is provided to facilitate assignment of the MASTERDRIVES parameters via the CBC with SDO tasks. This interface only allows data to be written to the EEPROM. The number for the parameter to be edited must be identified in the MASTERDRIVES parameter list. 5000h must be added to this parameter number and the product is then the object number which can be read or written. The parameter index is entered in the SDO object index.
  An SDO write task must be sent from the master to the MASTERDRIVES specifying the data type, subindex and value.
  The object number and subindex must be specified in an object read task. The response is sent automatically by the CBC.

Parameter editing with object 4001h

Object 4001_h (Parameter download)

Object with which parameters can be edited via an SDO task.

Since most of the parameters in MASTERDRIVES are not converted to CANopen objects, it is possible to gain read or write access via CANopen to all parameters with an SDO task using manufacturer-specific object 4001h.

- **Subindex 01**
  The parameter number, task identifier and index are entered in subindex 01. These values are then sent by the master with a write task.
  The Page Select bit must be set to write parameters higher than 1999. The Page Select bit is bit 15 of the 2nd word.

1st word:	Parameter identifier (PKE)		
	Byte 1		Byte 0
Bit No.:	15 12	11	10 0
	TI	SPM	PNU

2nd word:	Parameter index (IND)	
	Byte 3	Byte 2
Bit No.:	15 8	7 0
	Value = 0x0 or 0x80	Index

Object 4001_h (Parameter download)

TI: Task identifier
SPM: Toggle bit for parameter change report processing (not supported by CBC)
PNU: Parameter number

- **Subindex 02**
  The value to be assigned to the parameter with a parameter write task must be entered in subindex 02. This subindex need not be written for a parameter read task. The parameter value is stored in subindex 02 after the parameter read task. The data must be read out of this subindex.

	Parameter value (PWE)	
1st word:	Byte 1	Byte 0
	Parameter value **Low** (PWE1)	
2nd word:	Byte 3	Byte 2
	Parameter value **High** (PWE2)	

When a negative response identifier is returned in subindex 03, the error value of the parameter task is stored in subindex 2.

	Parameter value (PWE)	
1st word:	Byte 1	Byte 0
	Error number	

- **Subindex 03**
  Subindex 03 contains the response identifier of the parameter task, parameter number and parameter index.
  Subindex 03 also supplies the response identifier for all parameter tasks transmitted as SDOs.

1st word:	Parameter identifier (PKE)			
	Byte 1		Byte 0	
Bit No.:	15 12	11	10	0
	RI	SPM	PNU	

2nd word:	Parameter index (IND)		
	Byte 3		Byte 2
Bit No.:	15 8		7 0
	0 or 8	Value = 0	Index

RI: Response identifier
SPM: Toggle bit for parameter change report processing (not supported by CBC)
PNU: Parameter number

Table of task identifiers

Task-identifier	Meaning	Response identifier	
		positive	negative
0	No task	0	7 or 8
1	Request parameter value	1 or 2	↑
2	Change parameter value (word) for nonindexed parameters	1	|
3	Change parameter value (double word) for nonindexed parameters	2	|
6	Change parameter value (array) **1)**	4 or 5	|
7	Change parameter value (array, word) for indexed parameters **2)**	4	|
8	Change parameter value (array, double word) for indexed parameters **2)**	5	|
10	Reserved	-	|
11	Change parameter value (array, double word) and save to EEPROM **2)**	5	|
12	Change parameter value (array, word) and save to EEPROM **2)**	4	|
13	Change parameter value (double word) and save to EEPROM	2	|
14	Change parameter value (word) and save to EEPROM	1	↓

1) The desired element of the parameter description is specified in IND (2nd word)

2) The desired element of the indexed parameter is specified in IND (2nd word)

Table of response identifiers

0	No response
1	Transfer parameter value with nonindexed parameters (word)
2	Transfer parameter value with nonindexed parameters (double word)
4	Transfer parameter value (array word) with indexed parameters **1)**
5	Transfer parameter value (array double word) with indexed parameters **1)**
7	Task cannot be executed (with error number)
8	No control command source status for PKW interface
13	Reserved
14	Reserved

1) The desired element of the parameter description is specified in IND (2nd word)

Table of error values

No.	Meaning	
0	Illegal parameter number (PNU)	If no PNU is connected at all
1	Parameter value cannot be changed	If the parameter is a visualization parameter
2	Lower or upper value limit exceeded	-
3	Errored subindex	-
4	Not an array	In response to tasks for indexed parameters addressed to a nonindexed parameter. E.g. task: "Change parameter value (word, array)" for nonindexed parameter
5	Incorrect data type	-
6	Setting not allowed (resetting only)	-
7	Description element cannot be changed	Task cannot be executed on MASTERDRIVES
11	No control command source status	-
12	Keyword missing	Device parameter: "Access key" and/or "Par. special access" not appropriately set
15	Text array does not exist	-
17	Task cannot be executed in current operating state	Current converter status prohibits execution of transmitted task
101	Parameter number currently deactivated	-
102	Channel not wide enough **1)**	Parameter response too long for CAN message
103	Incorrect number of PKWs	Error cannot occur on CBC
104	Illegal parameter value **2)**	-
105	The parameter is indexed	In response to tasks for nonindexed parameters addressed to an indexed parameter. E.g. task: "Change PWE word" for indexed parameter
106	Task not implemented	-
107	Text cannot be changed	-
108	Number of PWEs <> index number	-

1) This error number is transferred if the parameter response to a parameter task is longer than the available 8 bytes of CAN data message which means that it cannot be sent. The data are not divided up between data messages.

2) This error number is transferred if no function is assigned in the device to the parameter to be passed or if it cannot currently be accepted for internal reasons (although it is within legal limits).

Parameter editing with offset 5000h

Example:

The value 2600 must be written to parameter U156 (ON posit. cam1), index 1.

1. Object type and subindex from parameter list:
   Integer 32, subindices 4
2. Calculation of object number
   U156 = 2156dec = 86Chex
   86Chex + 5000hex = 586Chex (object number)
3. SDO write task to index 586C, integer32, subindex 1 and value 2600.

8.5.3.2 Example: Change parameter value with object 4001h

The value 65282 must be written to parameter P711.

To change a parameter value

The drive must be in the Board Configuration (4) or Drive Setting (5) state before a new value can be written to parameter P711.

A value of 4 or 5 must be written to parameter P60 for this purpose.

The value 0x0000203C must then be written to SDO 4001 subindex 1.

The value is calculated as follows:

Convert parameter number 60 to a hex value = 0x03C

Bits 0-11 of the 1st word are written with the parameter number.

Select a task identifier from the list. You must first check the MASTERDRIVES parameter list to find out whether the selected parameter is indexed or a 16-bit or 32-bit parameter. You must then identify the task identifier in the task identifier list.

"2" is the task for a nonindexed parameter that must not be written to the EEPROM and is only 16 bits in size.

Parameter P60 must not be written to the EEPROM since this causes only a status change in the MASTERDRIVES.

The task identifier is entered in bits 12-15 of the 1st word.
This produces the value 0x203C.

Since parameter 60 is not indexed, no index need be entered in word 2 of object 4001 subindex 1. Since the value of parameter P 60 is lower than 1999, it is not necessary to set bit 15 of the second word (Page Select bit).
This produces a double word with the value 0x0000203C which can be written to SDO 4001.01 in this form.
The value to be assigned to parameter P60 must now be entered in object 4001, subindex 2. This is 4 or 5 in this example.

The converter should now be in state 4 (Board Configuration) or 5 (Drive Setting).

The new value can now be written to parameter P711.

The same procedure as described under "Precondition" must be followed now.

Convert P711 to hex = 0x2C7

Find task identifier in list. Check MASTERDRIVES parameter list beforehand to see whether it is an indexed or a 16- or 32-bit parameter.

You must then decide whether the parameter must be written to the EEPROM or the RAM.

Task identifier from list = 12.

Resultant value 0xC2C7

Since parameter P711 is indexed and the value must be written to index 1, the index of the 2nd word must contain a "1". Since parameter P711 is less than 1999, the Page Select bit need not be set.

Resultant value 0x0001C2C7

The value to be written to parameter P711 must then be transferred with object 4001 subindex 2.

To display the converter in the parameter menu again, a "1" must be written to parameter P60 again.

In the case of a parameter with a value higher than 1999, the Page Select bit must be set and subtracted from parameter number 2000. The resultant value must then be converted to a hex quantity and entered in the first word of object 4001.01.

8.5.3.3 Setting factory values (defaults) via CANopen

A "Restore factory settings" operation can be initiated via CANopen on the MASTERDRIVES using the object (4001) parameter. To restore the factory setting (default), parameter P60 (non-indexed, word) must be set to 2, as shown in Subsection 8.5.3.2. "1" must then be written to parameter P366 (non-indexed, word). The restore default operation is finally initiated by overwriting parameter P970 (non-index, word) with 0. The CB parameters are not reset so as to avoid interruption in communication with the CANopen master.

8.5.3.4 Changing the baud rate and bus address (on MASTERDRIVES MC only)

It is possible to alter the baud rate and bus address using the CBC and CANopen via manufacturer-specific objects 2100h and 2101h.

Change the baud rate

The baud rate of the CAN slave can be changed in two different ways:

- By using parameter P720 (see Subsection 8.5.2)
- By using object 2100h

Changing the baud rate with object 2100h:

Object 2100_h (transmission rate)					
Type	Uinteger8	**Access**	rw	**PDO mapping**	No

Baud rate of slave on CAN bus
You can change the baud rate of the node via the bus using object 2100h. To activate the baud rate, you must first enter the value and then execute a Reset Communication. The relevant node then receives and sends at the new baud rate.

Parameter 60 is set to 1 by the CBC after the Reset Communication.

Parameter 720.01 contains the new baud rate stored in the EEPROM.

CAUTION: The value stored in P720.01 is not the same as the value entered via CANopen (see table for assignment).

Object value	8	7	6	5	4	3	2	1	0
Baud rate [kbit/s]	10	20	50	100	125	250	500	800	1000

Change the bus address

Object 2101_h (Node number)					
Type	Uinteger 32	**Access**	rw	**PDO mapping**	No

The node ID (bus address) of the node is set with this object. The new node ID does not become active until the node receives a Reset Communication command from the CANopen master.

Parameter 60 is set to 1 by the CBC after the Reset Communication.

Parameter 918 then contains the new baud rate stored in the EEPROM.

8.5.4 Faults and alarms

When a fault occurs on the MASTERDRIVES, the CBC sends an EMERGENCY message on the bus.

These errors are listed in Subsection 8.5.4.2 with CANopen error code, error register, MASTERDRIVES errors and alarms and a brief description of the error.

All objects which are associated in some way with faults or alarms are described below.

8.5.4.1 Structure of object 1003_h (pre-defined error field)

<table>
<tr><th colspan="8">Object 1003_h (pre defined error field)</th></tr>
<tr><td colspan="8">♦ Subindex 0
Number of error entries</td></tr>
<tr><td colspan="2">Type</td><td>Uinteger8</td><td>Access</td><td>rw</td><td colspan="2">PDO mapping</td><td>No</td></tr>
<tr><td colspan="8">♦ Subindex 1
Error code
The error code of the most recent error is stored in subindex 1. The content of this object (subindex 1) is transferred in the emergency message. The meaning of the error code is specified in the error table in Subsection 8.5.4.2.
Structure of an emergency message</td></tr>
<tr><td colspan="2">Type</td><td>Uinteger8</td><td>Access</td><td>rw</td><td colspan="2">PDO mapping</td><td>No</td></tr>
<tr><td>Byte 0</td><td>Byte 1</td><td>Byte 2</td><td>Byte 3</td><td>Byte 4</td><td>Byte 5</td><td>Byte 6</td><td>Byte 7</td></tr>
<tr><td>Error code</td><td>Error code</td><td>Error register</td><td>Alarm number</td><td>Error number</td><td>Reserve</td><td>Error value</td><td>Error value</td></tr>
<tr><td colspan="8">The CANopen error code is transferred in bytes 0 and 1.
The error register in byte 2, as with object 1001h.
The MC alarm number assigned to the error code is displayed in byte 3.
The MC error number which produces this error code is displayed in byte 4.
In bytes 6 and 7, the error value for initialization error F151 or the identifier of the PDO with an insufficient number of databytes (A86) is displayed on MASTERDRIVES MC without F01.</td></tr>
</table>

8.5.4.2 Error codes

Error code 1000 hex Undecoded errors are assigned error code 1000 hex. Read the error number from byte 4.

Error code 1001 hex Undecoded alarms are assigned error code 1001 hex. Read the alarm number from byte 3.

Table of error codes

NOTE The CB errors and alarms can be found in Subsection 8.5.8.

Error code (hex)	Meaning	MC error	MC alarm	Error text / description
2300	current on device output side	F021		Motor I^2t
2310	continuous over current	F011		Overcurrent
2331	earth leakage phase U	F025		UCE top switch/UCE phase L1
2332	earth leakage phase V	F026		UCE bottom switch/UCE phase L2
2333	earth leakage phase W	F027		Pulse resistor fault/UCE phase L3
2380	I2t Converter		A025	I2t converter
2381	I2t motor		A029	I2t motor
3210	DC link over-voltage	F006		DC link overvoltage
3220	DC link under-voltage	F008		DC link undervoltage
3230	load error	F002		Fault/precharge
4210	Excess temperature device	F023		Inverter overtemperature
4280	Inverter temperature		A022	Inverter temperature
4310	Excess temperature drive	F020		Motor overtemperature
4380	Motor temperature		A023	Motor temperature
5112	U2=supply +24V	F017		SAFE STOP
5114	SAVE OFF alarm active		A017	SAFE STOP alarm active
5530	EEPROM	F041		EEPROM error
5580	Fault in EEPROM	F255		Error in EEPROM
6100	internal software	F040		Internal error sequence control
6180	Time slot overflow	F042		Time slot overflow
6181	DSP link	F043		DSP coupling
6182	BICO Manager fault	F044		BICO manager error
6183	Time slot overflow		A001	Time slot overflow
6310	loss of parameters	F038		Voltage OFF during parameter save

Error code (hex)	Meaning	MC error	MC alarm	Error text / description
6320	parameter error	F058		Parameter error in parameter task
6380	parameter error	F046		Parameter link error
6381	Parameter fault in follow-up task	F053		Parameter error in following task
6382	Parameter fault after factory setting/init.	F059		Parameter error after factory setting/init.
6383	Incorrect parameterization	F061		Parameterization error
7000	additional modules	F045		HW fault on option boards
7080	TB/CB initialization fault	F080		TB/CB initialization error
7081	OptBoard Heartbeat-counter	F081		Opt. board heartbeat counter
7082	Add. CB Initialization fault	F085		Add. CB initialization error
7121	Motor blocked	F015		Motor blocked
7180	Brake checkback Brake still closed		A036	Brake checkback signal "Brake still closed"
7181	Brake checkback Brake still open		A037	Brake checkback signal "Brake still open"
7182	Motor stall/lock		A042	Mot. stalled/blocked
7183			A075	The values of the leakage or rotor resistance measurement vary widely
7184	Stands. Meas		A078	Standstill measurement
7300	sensor	F051		Encoder fault
7320	Actual Position value not O.K.		A135	Actual position value not o.k.
7380	Encoder board initialisation fault	F054		Encoder board initialization error
7381	Encoder adjustment		A018	Encoder adjustment
7382	Encoder data serial protocol		A019	Encoder data serial protocol
7500	communication	F082		TB/CB message failure
7580	communication warning 1		A083	CB alarm 1 (Subsect. 8.5.8.1)
7581	communication warning 2		A084	CB alarm 2 (Subsect. 8.5.8.1)
8130	communication warning 3		A085	CB alarm 3 (Subsect. 8.5.8.1)
8210	communication warning 4		A086	CB alarm 4 (Subsect. 8.5.8.1)
8480	Overspeed		A033	Overspeed
8481	Setpoint/actual value deviation		A034	Setpoint/actual deviation
8500	Following in error in stand still		A140	Following error at standstill
8611	Following error in motion		A141	Following error in motion
8680	In position - timer monitoring		A142	Position reached - time monitoring

Error code (hex)	Meaning	MC error	MC alarm	Error text / description
FF00	external fault 1	F035		External fault 1
FF01	external fault 2	F036		External fault 2
FF02	PIN is missing	F063		PIN missing
FF03	Fault 1 Function blocks	F148		Fault 1 function blocks
FF04	Fault 2 Function blocks	F149		Fault 2 function blocks
FF05	Fault 3 Function blocks	F150		Fault 3 function blocks
FF06	Fault 4 Function blocks	F151		Fault 4 function blocks
FF07	SIMOLINK start Alarm		A002	SIMOLINK startup alarm
FF08	Drive not synchronous		A003	Drive not synchronous
FF09	Simulation active alarm		A014	Simulation active alarm
FF10	External alarm 1		A015	External alarm 1
FF11	External alarm 2		A016	External alarm 2
FF12	Alarm 1 Function blocks		A061	Alarm 1 function blocks
FF13	Alarm 2 Function blocks		A062	Alarm 2 function blocks
FF14	Alarm 3 Function blocks		A063	Alarm 3 function blocks
FF15	Alarm 4 Function blocks		A064	Alarm 4 function blocks
FF16	Axis does not exist machine data 1=0		A129	Axis does not exist, machine data 1=0
FF17	Operating conditions do not exist		A130	Operating conditions not fulfilled
FF18	OFF1 Missing		A131	OFF1 missing
FF19	OFF2 Missing		A132	OFF2 missing
FF20	OFF3 Missing		A133	OFF3 missing
FF21	Enable Controller ENC Missing		A134	No controller enable ENC
FF22	Machine data 1 changed		A136	Machine data 1 (position encoder type) changed, RESET necessary
FF23	Actual value disable not allowed – axis stand still		A145	Actual value disabling illegal - axis standstill
FF24	Direction of movement not allowed		A146	Direction of movement illegal
FF25	Deceleration=0		A148	Deceleration=0
FF26	Distance to go negative		A149	Distance to go negative
FF27	Setup speed=0		A160	Set up velocity stage=0
FF28	Reference approach velocity		A161	Homing approach velocity=0
FF29	Reference point reducing=0		A162	Homing creep velocity=0
FF30	MDI Block number not allowed		A165	MDI travel block number illegal

Error code (hex)	Meaning	MC error	MC alarm	Error text / description
FF31	No position has programmed in MDI mode		A166	Position MDI does not exist
FF32	No velocity has been programmed in MDI mode		A167	Velocity MDI does not exist
FF33	G91 not allowed with MDI on the fly		A168	On-the-fly MDI with G91 illegal
FF34	Start conditions for flying MDI do not exist		A169	Start condition for on-the-fly MDI does not exist
FF35	Negative overtravel reached		A195	Software limit switch approach in negative direction
FF36	Positive overtravel reached		A196	Software limit switch approach in positive direction

8.5.5 Life guarding / node guarding

MASTERDRIVES with CANopen supports life and node guarding.

After objects 100Ch (guard time) and 100Dh (life time factor) have been set, the MASTERDRIVES is ready to receive the first node guarding message. The monitor in the MASTERDRIVES is activated as soon as the first message has been received.

If the MASTERDRIVES has received a node guarding message, it returns the life guarding message using the same identifier. The MASTERDRIVES toggles the highest bit in every transmitted life guarding message, thereby indicating to the master that it is still alive. In turn, the MASTERDRIVES monitors the CANopen master and waits for the time set in object 100Ch multiplied by the number in object 100Dh.

When this time period has expired, the MASTERDRIVES switches to the state set in parameter P719, see Subsection 8.5.2.1.

8.5.6 The state machine

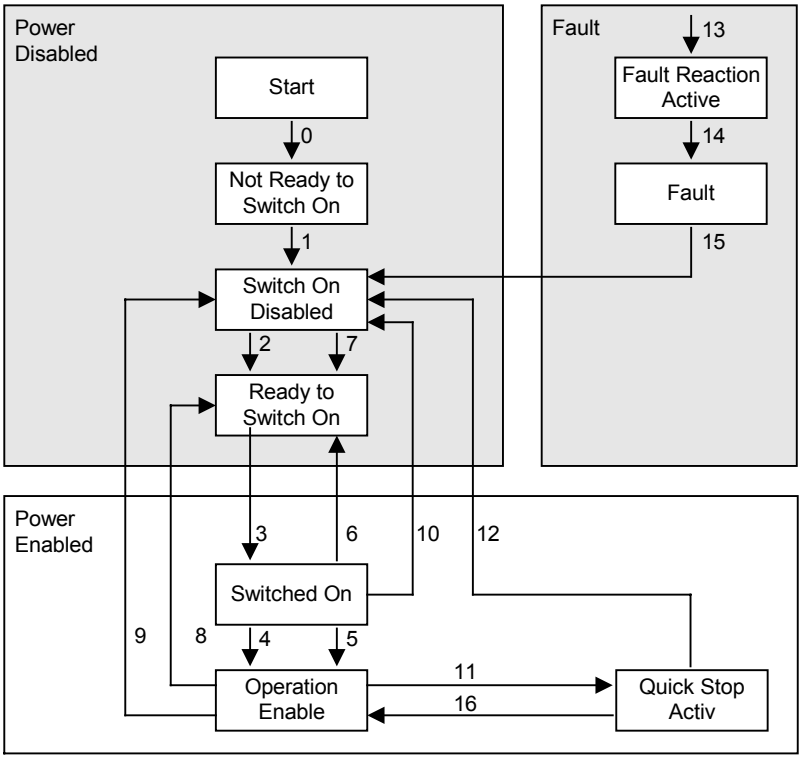

Fig. 8.5-3 The state machine

The state machine is similar to that of the MASTERDRIVES. Please see Chapter 12 "Function Diagrams", diagram 520 for an explanation of how individual states of the MASTERDRIVES can be reached.

Transition 8 is the only transition which is **not** available in MASTERDRIVES.

It has been implemented by skipping the status change from Operation Enable to Switch On Disabled in transition 9.

8.5.6.1 Control word

The bits of the control word must be interconnected in the converter according to the function diagram.

Some of them must be linked to the control word and some to the technology control word or the B-Pos control word of the MASTERDRIVES system.

The control word in the CANopen profile also includes manufacturer-specific bits. These can be freely connected within the MASTERDRIVES. A variety of control functions can be implemented via the MASTERDRIVES control word in this manner (see function diagrams 8513 and 8517).

6040h control word						
Bit	**Name**					
0	switch on					
1	disable voltage (please note: Implemented with OFF2 only)					
2	quick stop					
3	enable operation					
4	**Profile position mode**	**Profile velocity mode**	**Synchronous mode**	**Homing mode**	**Torque Profile mode**	**Setup mode**
	new setpoint	reserved	synchronous operation start	homing operation start	reserved	reserved
5	change_set_ immediately	reserved	reserved	reserved	reserved	reserved
6	absolute/ relative	reserved	reserved	reserved	reserved	[F_S]
7	reset fault					
8	halt (not in synchronous mode, automatic single block mode, automatic position mode)					
9	Reserved					
10	Reserved					
11	J-FWD [D_FWD]	reserved	reserved	reserved	reserved	J-FWD [D_FWD]
12	J-BWD [D_BWD]	reserved	reserved	reserved	reserved	J-BWD [D_BWD]
13	user specific					
14	user specific					
15	user specific					

8.5.6.2 Status word

Some of the bits of status word 1 in the MASTERDRIVES must be connected to a binector/connector converter. Please refer to the function diagram 8512 for MC F01 or 8518 for MC B-Pos in Subsection 8.5.12. These interconnections must always be made since the MASTERDRIVES status word contains bits which do not remain constantly at one or zero.

Every time a bit changes in the status word, the CBC sends, depending on the transmission type, a message with the content of the status word. This can cause evaluation problems and place an unnecessary burden on the bus.

6041h status word						
Bit	**Name**					
0	ready switch on					
1	switched on					
2	operation enabled					
3	Fault					
4	voltage disabled (please note: Implemented with OFF2 only)					
5	quick stop					
6	switch on disabled					
7	Warning					
8	user specific					
9	Remote					
10	target reached					
11	internal limit active					
12	**profile position mode**	**profile velocity mode**	**homing mode**	**synchronous mode**	**torque profile mode**	**Setup mode**
	setpoint acknowledge	speed=0	homing attained	synchronous mode active	Reserved	reserved
13	following error	reserved	homing error	reserved	Reserved	reserved
14	user specific					
15	user specific					

To provide a better overview of the conversion from MASTERDRIVES status word to CANopen status word, the relevant bits are listed in the table below.

State	**Bit 6** **Not Ready to Switch On**		**Bit 5** **Quick stop**		**Bit 4** **Voltage Disabled**		**Bit 3** **Fault**		**BIT 2** **Operation Enable**		**Bit 1** **Switched on**		**Bit 0** **Ready to switch on**	
Not ready to switch on	0	0	X	X	X	X	0	0	0	0	0	0	0	0
Not ready to switch on	1	1	X	X	X	X	0	0	0	0	0	0	0	1
Ready to switch on	0	0	1	1	0	1	0	0	0	0	0	0	1	1
Switched on	0	0	1	1	0	1	0	0	0	0	1	1	1	0
Operation Enabled	0	0	1	1	0	1	0	0	1	1	1	0	1	0
Fault	0	0	X	X	X	X	1	1	1	0	1	0	1	0
Fault Reaction active	0	0	X	X	X	X	1	1	1	0	1	0	1	0
Quick stop active	0	0	0	0	0	1	0	0	1	1	1	0	1	0

The white fields correspond to the bits in the CANopen specification status word. The gray fields correspond to the bits in the MASTERDRIVES status word.

8.5.6.3 Modes of operation

All available modes are listed in the following table.

The last column in the table specifies the unit which provides the mode.

Object 6060_h (modes of operation)					
Type	Integer8	**Access**	wo	**PDO mapping**	Yes

Modes of operation	**Mode**	**Device which supports mode**
FBh	Automatic single block mode	MASTERDRIVES MC with F01
FCh	Automatic position mode	MASTERDRIVES MC with F01
FDh	Setup mode	MASTERDRIVES MC
FFh	Synchronous mode	MASTERDRIVES MC with F01
1h	Profile position mode	MASTERDRIVES MC
3h	Profile velocity mode	MASTERDRIVES MC
4h	Torque profile mode	MASTERDRIVES MC without F01
6h	Homing mode	MASTERDRIVES MC

NOTE

Where specified in the above table, "MASTERDRIVES MC" applies to MASTERDRIVES MC units both with and without F01.

On the general CANopen device, the data for free connection is transferred in the highest bits of connector 3002. The highest bits of parameter P734.02 are transferred with object 6061.

8.5.7 Description of individual modes

8.5.7.1 Profile Position mode

NOTE

The MASTERDRIVES MC with F01 is switched directly to "Profile Position Mode" after booting.

The MASTERDRIVES MC without F01 is switched directly to "Profile Velocity Mode" after booting.

Positioning operations in "Profile Position Mode" are processed differently on MASTERDRIVES MCs with and without F01.

Positioning with MASTERDRIVES MC F01

Positioning on MASTERDRIVES MC F01 is implemented via MDI technology block 0. A number of connections must be made for this purpose. The speed setpoint connector must be wired to U533 and the position setpoint to U532. The required interconnections are contained in scriptfile MC F01.

The CBC automatically resets bit STA P2710.3 in response to a command that causes a status change from Operation Enable. It then waits for bit STA_EN and subsequently executes the command.

For an exact description of the internal interconnections of the CBC, please see Subsection 8.5.11.

Nonflying positioning

1. 6083h Profile_acceleration (MD 18), 6084h profile_deceleration (MD 19) are transferred to the converter.

NOTE

Parameter U502 (transfer of machine data) is set to 2 when object 6083h (MD18) or 6084h (MD19) is written. This is done automatically by the CBC.

Position setpoints are input in LU. The AVWF factor determines how they are normalized (see Subsection 9.4.8 "Position Sensing System for Motor Encoder").

1. The bit change_set_immediately is in control word zero.
2. The traversing velocity 6081h profile_velocity is transferred to the MASTERDRIVES by CANopen (U533).
3. The target position 607Ah target_position is transferred (U532)
4. The command new_setpoint = 1 is transferred to the MASTERDRIVES on a rising edge (STA bit is set).
5. The MASTERDRIVES acknowledges the command with setpoint_acknowledge = 1 (FUR=1) on a rising edge.
6. The MASTERDRIVES resets bit setpoint_acknowledge (FUR=0) when the target position is reached (DRS=1).
7. The CANopen MASTER can now initiate a new positioning operation.

Flying positioning

1. The bit change_set_immediately is in control word one.
2. The traversing velocity 6081h profile_velocity is transferred to the MASTERDRIVES by the CANopen master.
3. The target position 607Ah target_position is transferred.
4. The command new_setpoint is transferred to the MASTERDRIVES (STA bit is set) on a rising edge.
5. The MASTERDRIVES acknowledges the command with setpoint_acknowledge=1 (FUR=1 and Toggle_out= toggle_in).
6. The CANopen master resets bit new_setpoint before positioning has finished (STA bit remains active).
7. The CBC sets setpoint_acknowledge to 0.
8. The new traversing velocity 6081h profile_velocity is transferred to the MASTERDRIVES by the CANopen master.
9. The new target position 607Ah target_position is transferred.
10. The command new_setpoint is sent to the MASTERDRIVES again (TGL bit is toggled).
11. The MASTERDRIVES acknowledges the command with setpoint_acknowledge=1 (toggle_out= toggle_in).
12. This process can now be repeated as often as required until the MASTERDRIVES reaches its target position.

NOTE

If an active positioning operation needs to be terminated prematurely, the CANopen master must send a shutdown or halt command. Bit STA is set to zero at the same time. In the case of shutdown, the OFF1 command is transferred to the MC with checkback signal STA-EN=1 (transition to ready to start (switch on) state).

The MC remains operative with a HALT command.

The interrupted positioning task is resumed when the halt command is canceled.

Positioning with MASTERDRIVES MC

Positioning on MASTERDRIVES MC is processed via free block Basic Positioner. A number of connections must be made for this purpose. The speed setpoint connector must be "wired" to an analog setpoint changeover switch upstream of U868 and the position setpoint to U867.

For an exact description of the connections of the CBC, please see Subsection 8.5.11.

The required interconnections are contained in scriptfile MCEPOS.

Nonflying positioning

1. 6083h Profile_acceleration (U869.01), 6084h profile_deceleration (U869.02) are transferred to the converter.
2. Bit change_set_immediately is zero in the control word. The bit absolute/relative can be 1 or 0.
3. The traversing velocity 6081h profile_velocity is transferred to the MASTERDRIVES by the CANopen master (U868).
4. The target position 607Ah target_position is transferred (U867)
5. The command new_setpoint = 1 is transferred to the MASTERDRIVES.([SPV_RIE]=1) on a rising edge.
6. The MASTERDRIVES acknowledges the command with setpoint_acknowledge=1 ([SPV_RIE_ACK]=1).
7. The MASTERDRIVES resets bit setpoint _acknowledge ([POS_RUN]=0) when the target position is reached ([POS_OK]=1).
8. The CANopen MASTER can now initiate a new positioning operation again.

Flying positioning

1. Bit change_set_immediately is one in the control word.
2. The traversing velocity 6081h profile_velocity is transferred to the MASTERDRIVES by the CANopen master.
3. The target position 607Ah target_position is transferred.
4. The command new_setpoint is transferred to the MASTERDRIVES on a rising edge ([SPV_RIE]=1)
5. The MASTERDRIVES acknowledges the command with setpoint_acknowledge=1 ([SPV_RIE_ACK]=1).
6. The CANopen master resets bit new_setpoint before positioning has finished ([SPV_RIE] is set to 0).
7. The CBC sets setpoint_acknowledge to 0 ([SPV_RIE_ACK]=0).
8. The new traversing velocity 6081h profile_velocity is transferred to the MASTERDRIVES by the CANopen master.
9. The new target position 607Ah target_position is transferred.
10. The command new_setpoint is sent to the MASTERDRIVES again ([SPV_RIE]=1).
11. The MASTERDRIVES acknowledges the command with setpoint_acknowledge=1 ([SPV_RIE_ACK]=1).
12. This process can now be repeated as often as required until the MASTERDRIVES reaches its target position.

NOTE

If an active positioning operation needs to be terminated prematurely, the CANopen master must send a shutdown or halt command.

In the case of shutdown, the MASTERDRIVES is shut down via OFF 1.

The MC remains operative with a HALT command.

The interrupted positioning task is resumed when the halt command is canceled.

8.5.7.2 Profile Velocity Mode

The "Profile Velocity Mode" is selected with [3] by the object 6060h Modes_of_operation (MASTERDRIVES technology mode control [4] or MASTERDRIVES speed control (master drive)).

Profile Velocity mode with F01

In order to obtain a velocity as a setpoint or actual value in "Profile Velocity mode", object 6092h (feed constant) must be written by the CANopen master at every boot. This object is stored only on the CBC and deleted on every reinitialization or power OFF.

The value of V_{rated} must be entered in Lu/min (P205) in subindex 1 of 6092h. The entry in subindex 1 determines the transfer format of the setpoints and actual values.

The reference speed value (P353) must be entered in 6092h subindex 2.

Example

The drive is normalized to µm. However, these values can be quite high for a velocity input. If the value from P205 is entered in mm/min in subindex 1, all setpoints can be input in mm/min. Actual values are then also displayed in mm/min.

The reference speed (P353) must be entered in P6092 subindex 2.

The setpoint is specified in LU/min as defined according to object 6092.01h and may deviate from the quantity normalized in the drive by P169/P170. The unit of length LU is specified by the position-feedback scaling factor.

The actual values are returned in object 6092h depending on the normalization.

The setpoint is looped into parameter P212 (source setpoint control) via an analog value switch on the position controller. The analog value switch is connected upstream so that the setpoints are supplied by the technology during referencing (homing). If you decide you want the technology to supply the setpoints all the time, i.e. even in "Profile Velocity mode", you will not need the analog value switch (see Subsection 8.5.12).

In this case, object 60FFh has no influence on the speed. You will then need to modify the velocity values as described in the technology manual.

Checkback signals in profile velocity mode:

In "Profile Velocity Mode", the status word includes the messages Target Reached and Internal Limit Active. Bit speed = 0 must be generated by a free block interconnection and wired to the location as specified in function diagram 8512.

The bit "target reached" is generated by a free block interconnection with a limit value monitor.

An exact interconnection of free blocks for the message is described in the Appendix.

Profile Velocity mode without F01

The Profile Velocity Mode is implemented in the basic unit on MASTERDRIVES without F01. It corresponds to simple speed-controlled operation.
Profile Velocity Mode is defined by the following objects

- Acceleration or deceleration can be set via objects 6083h (profile_acceleration) and 6084h (profile_deceleration).
- The target velocity for speed-controlled operation is transferred to the MASTERDRIVES via object 60FFh (target_velocity).
- The transmitted setpoint and actual velocity can be read out via objects 606Bh (velocity_demand_value) and 606Ch (velocity_actual_value).
- The actual speed in increments per second can be read out via object 6069h. Object 606Ah is a read-only object. The actual speed value is always supplied by the position encoder.

On a MASTERDRIVES MC without F01, objects 2200.01 (P205 rated velocity), 2200.02 (P353.01 reference speed before decimal point) and 2200.03 (P353.02 reference speed after decimal point) are read out as the converter is booting.

As a result, there is no need to write any objects. The CBC has all necessary information to normalize setpoints and actual values correctly.

If, however, a factor of 10 must be introduced because, for example, the speed setpoint is too high, a value raised by a factor of 10 can be written to object 2200.01.

Example

The drive is normalized to µm.

The entry in object 2200.01 defines the transfer format for setpoints and actual values. After the CBC has booted, the value from parameter P205 is stored in this object, i.e. in mm/min. To increase the setpoints even further, it is possible to re-normalize them to e.g. m/min by writing them to object 2200.01. The MASTERDRIVES is not aware that re-normalization has taken place. The value from object 2200.01 is not passed to the MASTERDRIVES.

The setpoint is specified in LU/min as defined according to object 2200.01h and may deviate from the quantity normalized in the drive by P205. The unit of length LU is specified by the position-feedback scaling factor.

The actual values are returned in object 2200.01h depending on the normalization.

The setpoint is wired to parameter P212 (source setpoint control).

Checkback signals in profile velocity mode:

In "Profile Velocity Mode", the status word includes the messages Target Reached and Internal Limit Active. Bit speed = 0 must be generated by a free block interconnection and wired to the location as specified in function diagram 8518.

The bit "target reached" is generated by a free block interconnection with a limit value monitor.

An exact interconnection of free blocks for the message can be found in function diagram 8518.

Setpoint specification in Profile Velocity Mode:

Setpoints are specified in Profile Velocity Mode according to the value in object 2200.01 in which, for example, the value v_{rated} = 6000 mm/min is stored.
If the drive is to operate at one third of the rated velocity, the value 2000 mm/min must be specified via object 60FFh.

8.5.7.3 Synchronous mode

Synchronous mode is a manufacturer-specific mode.

The gear ratio can be set with object 2002h.

To activate

Write FF to object 6060h

Start up the MASTERDRIVES MC F01 and then set bit enable_Synchronous Mode (STA-Bit). MASTERDRIVES will then switch to synchronous mode.

Bit 12 Synchronous_Mode_active is set in the status word as a checkback.

NOTE

For more detailed information about synchronous operation, see Chapter 9 "Technology Option F01".

8.5.7.4 Homing mode

The axis can be homed (referenced) by various methods in Homing mode.

Various objects listed below are required for this purpose. For detailed information about reference point approach (homing), see Chapter 7 "Functions" or Chapter 9 "Technology Option F01".

Control and status bits

The bits of the control and status words are utilized, as specified in profile DSP 402, to operate homing mode.

After homing mode has been selected, the MASTERDRIVES MC must be switched to the "Operation Enable" status. The homing approach is then started by setting control word bit 4 (Homing Operation start). Homing is stopped by the halt bit or a shutdown. Once the MASTERDRIVES has reached the home position (reference point), it sets bit 12 in the status word.

To start a new homing operation when the axis has already been homed, you must exit Homing mode and then restart it again.

If one of the following errors occurs in the course of homing with a MASTERDRIVES MC with F01, an EMERGENCY message is sent and bit 13 in the status word set:

- A130
- A131
- A132
- A133
- A134

The MASTEDRIVES MC without F01 does not generate any alarms.

Bit 11 in the status word is set if the selected homing position is not within the software limit switch area.

Bit 13 is set if the selected homing position is outside the software limit switch area or bit F_REF_BD of B-Pos is set to 1.

Homing mode objects

Object 607Ch: Home Offset

If it becomes necessary to move the located home position (reference point) for mechanical reasons, this can be done with the Home Offset object. The home offset value is entered in machine data 4 (object does not exist for MASTERDRIVES MC without F01).

Object 6098h: Homing_method

The homing method is selected with the Homing Method object.

If a homing method is selected, a number of parameter tasks are processed between the CBC and MASTERDRIVES before the SDO response arrives.

See tables (columns "J-FWD" and "J-BWD"; set with control bit Homing Operation Start depending on the selected mode).

Parameter P178 (Src Rough Pulse) is not assigned through the selection of a homing method, although this may need to be changed in some cases (see MASTERDRIVES Compendium Chapter 7 "Functions" and Chapter 9 "Technology Option F01").

Homing with MC F01 The following table shows the values of parameters that are assigned when a homing method is selected.

Mode	P183	U501.05	U501.08	U502	J-FWD	J-BWD	Reversal cam
1	0x0011	1	0	2	0	1	no
2	0x0021	2	0	2	1	0	no
3	0x0021	2	0	2	1	0	no
5	0x0011	1	0	2	0	1	no
7	0x0021	2	0	2	1	0	yes
10	0x0011	1	0	2	1	0	yes
11	0x0011	1	0	2	0	1	yes
14	0x0021	2	0	2	0	1	yes
17	0x0011	1	1	2	0	1	no
18	0x0021	2	1	2	1	0	no
19	0x0021	2	1	2	1	0	no
21	0x0011	1	1	2	0	1	no
23	0x0021	2	1	2	1	0	yes
26	0x0011	1	1	2	1	0	yes
27	0x0011	1	1	2	0	1	yes
30	0x0021	2	1	2	0	1	yes
32	0x0021	2	2	2	0	1	no
33	0x0011	1	2	2	1	0	no
34	X 1)	3	0	2	1	0	no

1) not evaluated

NOTICE

The values entered in the parameters above as a result of a homing method selection are stored only in the RAM. For this reason, object 6098h must be written prior to **every** homing operation. The 3rd and 4th places of parameter P183 are always set to zero. As a result, the count direction for position sensing cannot be inverted nor can a fractional actual value evaluation factor be used.

NOTE

Please note that parameters MD45 and U536 must be adapted to the relevant hardware. When a homing method is selected, parameters P183, U501.05, U501.08 and U502 are assigned in the order given. J-FWD and J-BWD are set, depending on the homing method, in the control word when bit start_homing is set. Zero is selected as the homing method when the MASTERDRIVES boots. When bit start_homing is set in the control word, J-FWD and-BWD are set simultaneously. This is a way of avoiding the need to write object 6098h prior to every homing operation.

The object homing_method cannot, however, be set to zero. Any attempt to do so generates an abort message.

Homing with MC

The following table shows the values of the parameters assigned when a homing method is selected.

On a MASTERDRIVES MC, all parameters with parameter tasks are written to the EEPROM. If the homing method remains unchanged, object 6098h does not need to written every time the system boots. The parenthesized parameters are addressed via an OR connection. Refer to the function diagrams for exact interconnection details.

Mode	U274.03 (U866.06) D-FWD	U275.03 (U866.07) D-BWD	U245 (U866.11)	U246 (U866.12)	U875.10	P648.01	U878.01	U878.02	U878.03	P172	P173
17	0	1	18	0	0	4	-	B220	-	-	-
18	1	0	0	18	1	4	-	B220	-	-	-
19	1	0	0	18	1	4	-	B220	-	-	-
21	0	1	18	0	0	4	-	B220	-	-	-
23	1	0	0	12&18	1	4	-	B220	-	-	-
26	1	0	18	12	0	4	-	B220	-	-	-
27	0	1	10 and18	0	0	4	-	B220	-	-	-
30	0	1	10	18	1	4	-	B220	-	-	-
35	-	-	-	-	-	-	556	B220	627	880	3200

All available methods are described below. Any methods not described are not supported by the MASTERDRIVES.

On a MASTERDRIVES MC without technology board, only the homing methods listed in the table above can be selected.

NOTE

You must always use digital input 5 as the interrupt input on the MASTERDRIVES MC and B-Pos.

For this reason, parameter P647.01 must be set to 0 and parameter P648.01 to 4 on MASTERDRIVES MC without F01. If both inputs are defined as high-speed inputs (P647.01 and P648.01 = 4), the behavior during homing is different.

Reversal cams must be driven via Dig IN 1 and Dig IN 2.

The homing method must be changed before the MASTERDRIVES is switched to Homing mode.

No creep velocity for precise referencing is available for homing with B-Pos on MASTERDRIVES MC without F01 and the deceleration path is not retraced. A suitably low traversing velocity should therefore be selected.

Homing methods using P178 = 16 or 18 and P647.01 = 0 or P648.01 = 0

Homing_method 1

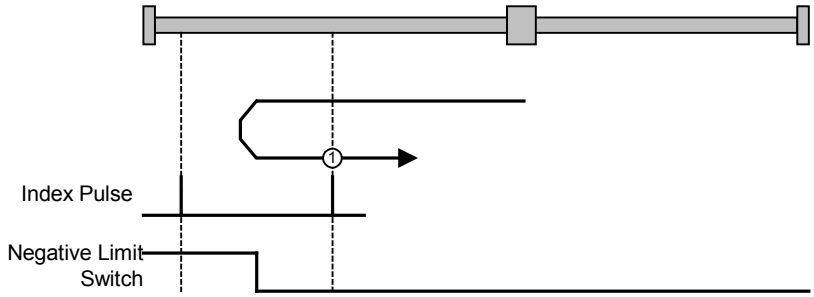

Fig. 8.5-4 Homing_method 1

The axis is positioned to the right of the Bero installed as a limit switch. The homing operation is started by bit 4 in the control word.

The axis traverses under speed control at homing approach velocity v_A [MD7] towards the Bero. When the Bero responds, the axis decelerates down to homing creep velocity v_R [MD6] and reverses its direction of rotation.

When it exits the Bero in the positive direction, it searches for the next zero pulse of the position encoder. When the zero pulse is found, the axis is braked to a standstill under speed control.

It retraces the deceleration path traveled as a result of the braking operation by executing a position-controlled return motion (positioning) towards the zero pulse. The axis then activates "Homing Attained" in the status word via bit ARFD.

Homing_method 2

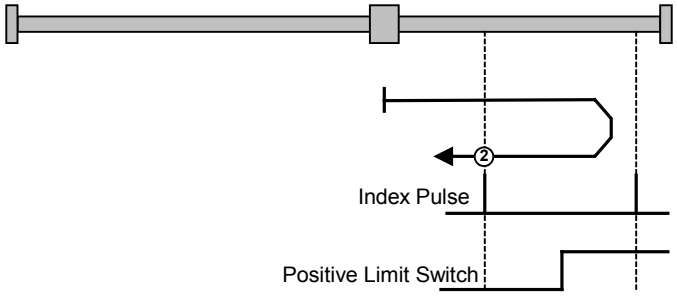

Fig. 8.5-5 Homing_method 2

The axis is positioned to the left of the Bero installed as a limit switch. The homing operation is started by bit 4 in the control word.

The axis traverses under speed control at homing approach velocity v_A [MD7] towards the Bero. When the Bero responds, the axis decelerates down to homing creep velocity v_R [MD6] and reverses its direction of rotation. When it exits the Bero in the negative direction, it searches for the next zero pulse of the position encoder. When the zero pulse is found, the axis is braked to a standstill under speed control. It retraces the deceleration path traveled as a result of the braking operation by executing a position-controlled return motion (positioning) towards the zero pulse. The axis then activates "Homing Attained" in the status word via bit ARFD.

Homing_method 3

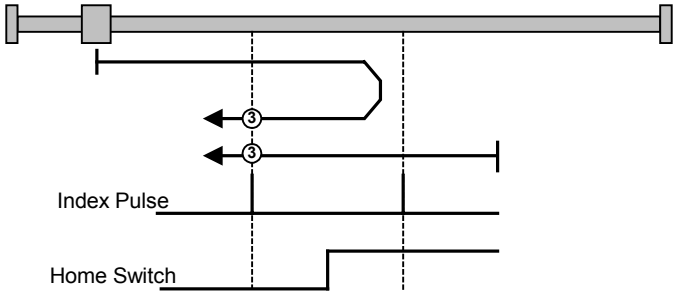

Fig. 8.5-6 Homing_method 3

The axis is positioned on the Bero installed as a homing switch. The homing operation is started by bit 4 in the control word.

The axis traverses under speed control at homing creep velocity v_R [MD6] in a negative direction. When it exits the Bero in the negative direction, it searches for the next zero pulse of the position encoder. When the zero pulse is found, the axis is braked to a standstill under speed control. It retraces the deceleration path traveled as a result of the braking operation by executing a position-controlled return motion (positioning) towards the zero pulse. The axis then activates "Homing Attained" in the status word via bit ARFD.

The axis is positioned to the left of the Bero. The homing operation is started by bit 4 in the control word.

The axis traverses under speed control at homing approach velocity v_A [MD7] towards the Bero. When the Bero responds, the axis decelerates down to homing creep velocity v_R [MD6] and reverses its direction of rotation. When it exits the Bero in the negative direction, it searches for the next zero pulse of the position encoder. When the zero pulse is found, the axis is braked to a standstill under speed control. It retraces the deceleration path traveled as a result of the braking operation by executing a position-controlled return motion (positioning) towards the zero pulse. The axis then activates "Homing Attained" in the status word via bit ARFD.

Homing_method 5

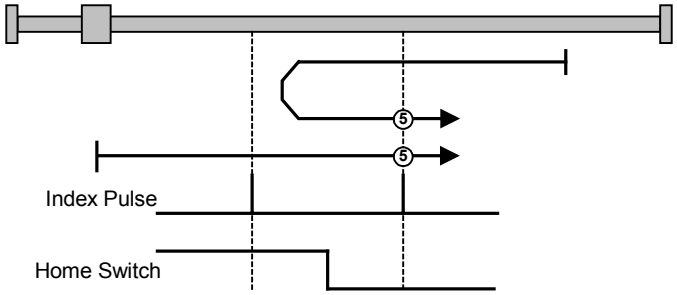

Fig. 8.5-7 Homing_method 5

The axis is positioned on the Bero. The homing operation is started by bit 4 in the control word.

The axis traverses under speed control at homing creep velocity v_R [MD6] in a positive direction. When it exits the Bero in the positive direction, it searches for the next zero pulse of the position encoder. When the zero pulse is found, the axis is braked to a standstill under speed control. It retraces the deceleration path traveled as a result of the braking operation by executing a position-controlled return motion (positioning) towards the zero pulse. The axis then activates "Homing Attained" in the status word via bit ARFD.

The axis is positioned to the right of the Bero. The homing operation is started by bit 4 in the control word.

The axis traverses under speed control at homing approach velocity v_A [MD7] towards the Bero. When the Bero responds, the axis decelerates down to homing creep velocity v_R [MD6] and reverses its direction of rotation. When it exits the Bero in the positive direction, it searches for the next zero pulse of the position encoder. When the zero pulse is found, the axis is braked to a standstill under speed control. It retraces the deceleration path traveled as a result of the braking operation by executing a position-controlled return motion (positioning) towards the zero pulse. The axis then activates "Homing Attained" in the status word via bit ARFD.

Homing_methods 7 and 10

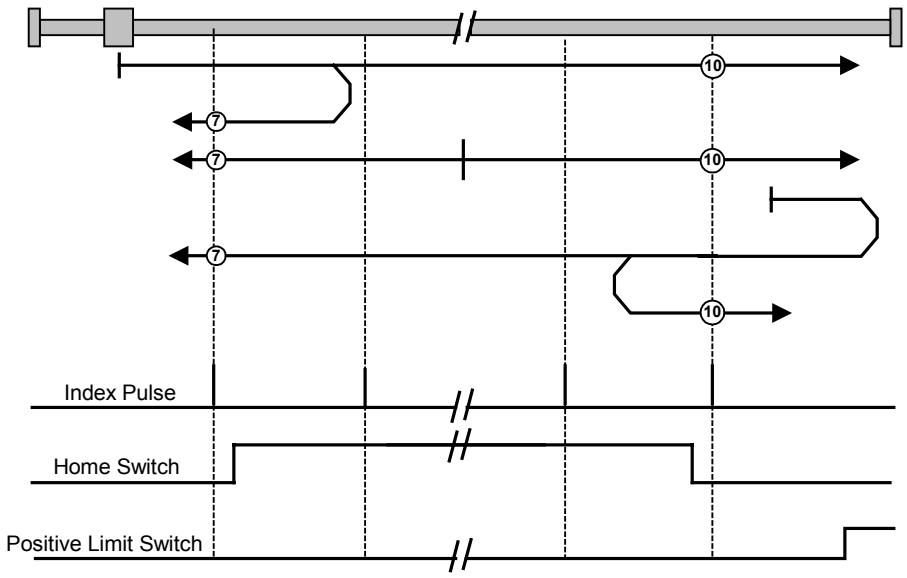

Fig. 8.5-8 Homing_methods 7 and 10

⑦ The axis is positioned to the left of the Bero. The homing operation is started by bit 4 in the control word.

The axis traverses under speed control at homing approach velocity v_A [MD7] towards the Bero. When the Bero responds, the axis decelerates down to homing creep velocity v_R [MD6] and reverses its direction of rotation. When it exits the Bero in the negative direction, it searches for the next zero pulse of the position encoder. When the zero pulse is found, the axis is braked to a standstill under speed control. It retraces the deceleration path traveled as a result of the braking operation by executing a position-controlled return motion (positioning) towards the zero pulse. The axis then activates "Homing Attained" in the status word via bit ARFD.

⑦ The axis is positioned on the Bero installed as a homing switch. The homing operation is started by bit 4 in the control word.

The axis traverses under speed control at homing creep velocity v_R [MD6] in a negative direction. When it exits the Bero in the negative direction, it searches for the next zero pulse of the position encoder. When the zero pulse is found, the axis is braked to a standstill under speed control. It retraces the deceleration path traveled as a result of the braking operation by executing a position-controlled return motion (positioning) towards the zero pulse. The axis then activates "Homing Attained" in the status word via bit ARFD.

⑦ The axis is positioned to the right of the Bero. The homing operation is started by bit 4 in the control word.

The axis traverses under speed control at homing approach velocity v_A [MD7] in the direction of the positive limit switch (reversal cam). When the cam responds, the axis its direction of rotation and travels towards the Bero. When the Bero responds, the axis decelerates down to homing creep velocity v_R [MD6]. When it exits the Bero in the negative direction, it searches for the next zero pulse of the position encoder. When the zero pulse is found, the axis is braked to a standstill under speed control. It retraces the deceleration path traveled as a result of the braking operation by executing a position-controlled return motion (positioning) towards the zero pulse. The axis then activates "Homing Attained" in the status word via bit ARFD.

⑩ The axis is positioned to the left of the Bero. The homing operation is started by bit 4 in the control word.

The axis traverses under speed control at homing approach velocity v_A [MD7] towards the Bero. When the Bero responds, the axis decelerates down to homing creep velocity v_R [MD6]. When it exits the Bero in the positive direction, it searches for the next zero pulse of the position encoder. When the zero pulse is found, the axis is braked to a standstill under speed control. It retraces the deceleration path traveled as a result of the braking operation by executing a position-controlled return motion (positioning) towards the zero pulse. The axis then activates "Homing Attained" in the status word via bit ARFD.

⑩ The axis is positioned on the Bero installed as a homing switch. The homing operation is started by bit 4 in the control word.

The axis traverses under speed control at homing creep velocity v_R [MD6] in a positive direction. When it exits the Bero in the positive direction, it searches for the next zero pulse of the position encoder. When the zero pulse is found, the axis is braked to a standstill under speed control. It retraces the deceleration path traveled as a result of the braking operation by executing a position-controlled return motion (positioning) towards the zero pulse. The axis then activates "Homing Attained" in the status word via bit ARFD.

⑩ The axis is positioned to the right of the Bero. The homing operation is started by bit 4 in the control word.

The axis traverses under speed control at homing approach velocity v_A [MD7] towards the positive limit switch (reversal cam). When the cam responds, the axis changes its direction of rotation and travels towards the Bero. When the Bero responds, the axis decelerates down to homing creep velocity v_R [MD6] and reverses its direction of rotation. When it exits the Bero in the positive direction, it searches for the next zero pulse of the position encoder. When the zero pulse is found, the axis is braked to a standstill under speed control. It retraces the deceleration path traveled as a result of the braking operation by executing a position-controlled return motion (positioning) towards the zero pulse. The axis then activates "Homing Attained" in the status word via bit ARFD.

Homing_methods 11 and 14

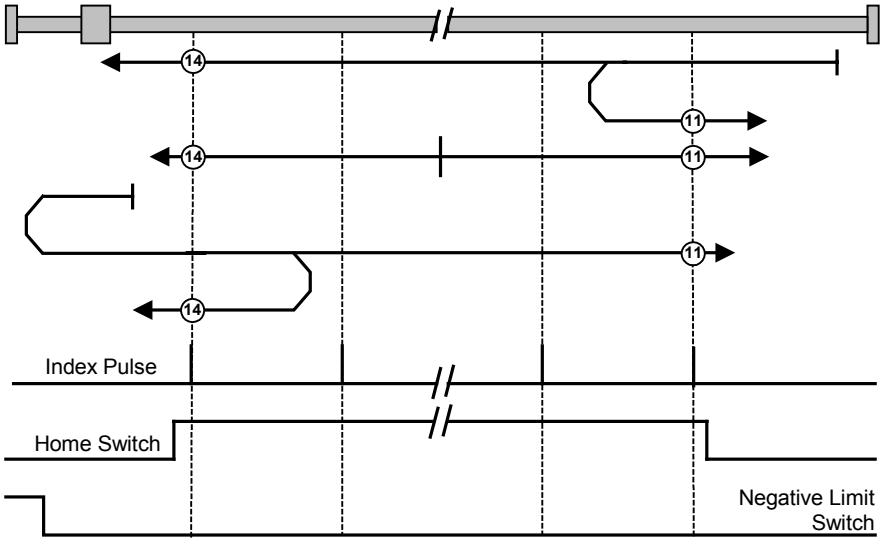

Fig. 8.5-9 Homing_methods 11 and 14

⑪ The axis is positioned to the right of the Bero. The homing operation is started by bit 4 in the control word.

The axis traverses under speed control at homing approach velocity v_A [MD7] towards the Bero. When the Bero responds, the axis decelerates down to homing creep velocity v_R [MD6] and reverses its direction of rotation. When it exits the Bero in the positive direction, it searches for the next zero pulse of the position encoder. When the zero pulse is found, the axis is braked to a standstill under speed control. It retraces the deceleration path traveled as a result of the braking operation by executing a position-controlled return motion (positioning) towards the zero pulse. The axis then activates "Homing Attained" in the status word via bit ARFD.

⑪ The axis is positioned on the Bero installed as a homing switch. The homing operation is started by bit 4 in the control word.

The axis traverses under speed control at homing creep velocity v_R [MD6] in a positive direction. When it exits the Bero in the positive direction, it searches for the next zero pulse of the position encoder. When the zero pulse is found, the axis is braked to a standstill under speed control. It retraces the deceleration path traveled as a result of the braking operation by executing a position-controlled return motion (positioning) towards the zero pulse. The axis then activates "Homing Attained" in the status word via bit ARFD.

⑪ The axis is positioned to the left of the Bero. The homing operation is started by bit 4 in the control word.

The axis traverses under speed control at homing approach velocity v_A [MD7] towards the negative limit switch (reversal cam). When the cam responds, the axis changes its direction of rotation and travels towards the Bero. When the Bero responds, the axis decelerates down to homing creep velocity v_R [MD6]. When it exits the Bero in the positive direction, it searches for the next zero pulse of the position encoder. When the zero pulse is found, the axis is braked to a standstill under

speed control. It retraces the deceleration path traveled as a result of the braking operation by executing a position-controlled return motion (positioning) towards the zero pulse. The axis then activates "Homing Attained" in the status word via bit ARFD.

⑭ The axis is positioned to the right of the Bero. The homing operation is started by bit 4 in the control word.

The axis traverses under speed control at homing approach velocity v_A [MD7] towards the Bero. When the Bero responds, the axis decelerates down to homing creep velocity v_R [MD6]. When it exits the Bero in the negative direction, it searches for the next zero pulse of the position encoder. When the zero pulse is found, the axis is braked to a standstill under speed control. It retraces the deceleration path traveled as a result of the braking operation by executing a position-controlled return motion (positioning) towards the zero pulse. The axis then activates "Homing Attained" in the status word via bit ARFD.

⑭ The axis is positioned on the Bero installed as a homing switch. The homing operation is started by bit 4 in the control word.

The axis traverses under speed control at homing creep velocity v_R [MD6] in a negative direction. When it exits the Bero in the negative direction, it searches for the next zero pulse of the position encoder. When the zero pulse is found, the axis is braked to a standstill under speed control. It retraces the deceleration path traveled as a result of the braking operation by executing a position-controlled return motion (positioning) towards the zero pulse. The axis then activates "Homing Attained" in the status word via bit ARFD.

⑭ The axis is positioned to the left of the Bero. The homing operation is started by bit 4 in the control word.

The axis traverses under speed control at homing approach velocity v_A [MD7] towards the negative limit switch (reversal cam). When the cam responds, the axis changes its direction of rotation and travels towards the Bero. When the Bero responds, the axis decelerates down to homing creep velocity v_R [MD6] and reverses its direction of rotation. When it exits the Bero in the negative direction, it searches for the next zero pulse of the position encoder. When the zero pulse is found, the axis is braked to a standstill under speed control. It retraces the deceleration path traveled as a result of the braking operation by executing a position-controlled return motion (positioning) towards the zero pulse. The axis then activates "Homing Attained" in the status word via bit ARFD.

Homing methods using P178 = 16 or 18 and P647.01 = 4 or P648.01 = 4

Homing_method 17

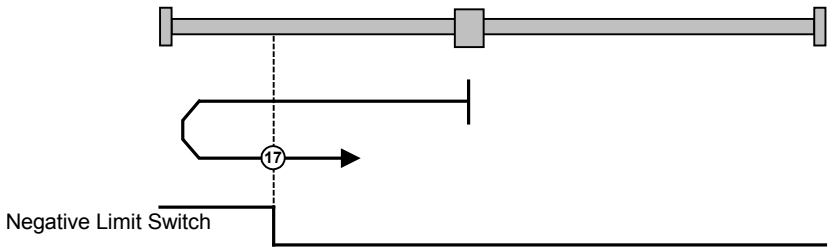

Fig. 8.5-10 Homing_method 17

⑰ Axis is positioned to the right of the BERO installed as a negative limit switch. The homing operation is started by bit 4 in the control word.

Behavior of MASTERDRIVES MC with F01

The axis traverses under speed control at homing approach velocity v_A [MD7] towards the Bero. When the Bero responds, the axis decelerates down to homing creep velocity v_R [MD6] and changes its direction of rotation. When the Bero falling edge appears, the axis is decelerated down to standstill under speed control. It retraces the deceleration path traveled as a result of the braking operation by executing a position-controlled return motion (positioning) towards the zero pulse. The axis then activates "Homing Attained" in the status word via bit ARFD.

Behavior of MASTERDRIVES MC without F01

The axis traverses under position control towards the Bero at the values stored in U006 (homing acceleration) and U873.01 (homing speed). When the Bero responds, the axis changes its direction of rotation and travels at the same speed in the opposite direction. When the Bero falling edge appears, the axis is decelerated to a standstill with the value from U006. It does not retrace the braking path traveled during the braking operation. It activates "Homing Attained" in the status word via bit ARFD.

Homing_method 18

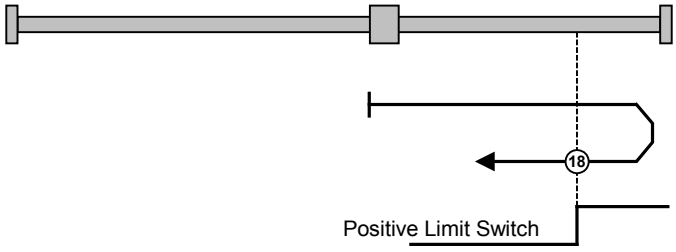

Fig. 8.5-11 Homing_method 18

⑱ Axis is positioned to the left of the BERO installed as a positive limit switch. The homing operation is started by bit 4 in the control word.

Behavior of MASTERDRIVES MC with F01

The axis traverses under speed control at homing approach velocity v_A [MD7] towards the Bero. When the Bero responds, the axis decelerates down to homing creep velocity v_R [MD6] and changes its direction of rotation. When the Bero falling edge appears, the axis is decelerated down to standstill under speed control. It retraces the deceleration path traveled as a result of the braking operation by executing a position-controlled return motion (positioning) towards the zero pulse. The axis then activates "Homing Attained" in the status word via bit ARFD.

Behavior of MASTERDRIVES without F01

The axis traverses under position control towards the Bero at the values stored in U006 (homing acceleration) and U873.01 (homing speed). When the Bero responds, the axis changes its direction of rotation and travels at the same speed in the opposite direction. When the Bero falling edge appears, the axis is decelerated to a standstill with the value from U006. It does not retrace the braking path traveled during the braking operation. It activates "Homing Attained" in the status word via bit ARFD.

Homing_method 19

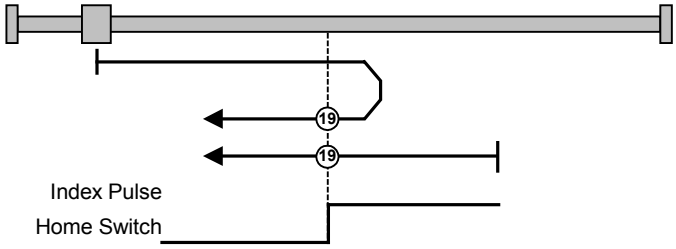

Fig. 8.5-12 Homing_method 19

⑲ Axis is positioned to the left of the BERO installed as a homing switch. The homing operation is started by bit 4 in the control word.

Behavior of MASTERDRIVES MC with F01

The axis traverses under speed control at homing approach velocity v_A [MD7] towards the Bero. When the Bero responds, the axis decelerates down to homing creep velocity v_R [MD6] and changes its direction of rotation. When the Bero falling edge appears, the axis is decelerated down to standstill under speed control. It retraces the deceleration path traveled as a result of the braking operation by executing a position-controlled return motion (positioning) towards the zero pulse. The axis then activates "Homing Attained" in the status word via bit ARFD.

Behavior of MASTERDRIVES without F01

The axis traverses under position control towards the Bero at the values stored in U006 (homing acceleration) and U873.01 (homing speed). When the Bero responds, the axis changes its direction of rotation and travels at the same speed in the opposite direction. When the Bero falling edge appears, the axis is decelerated to a standstill with the value from U006. It does not retrace the braking path traveled during the braking operation. It activates "Homing Attained" in the status word via bit ARFD.

⑲ The axis is positioned on the Bero installed as a homing switch. The homing operation is started by bit 4 in the control word.

Behavior of MASTERDRIVES MC with F01

The axis traverses under speed control at homing creep velocity v_R [MD6] in a negative direction. When the Bero falling edge appears, the axis is decelerated down to standstill under speed control. It retraces the deceleration path traveled as a result of the braking operation by executing a position-controlled return motion (positioning) towards the zero pulse. The axis then activates "Homing Attained" in the status word via bit ARFD.

Behavior of MASTERDRIVES without F01

The axis traverses under position control towards the Bero at the values stored in U006 (homing acceleration) and U873.01 (homing speed) in a negative direction. When the Bero falling edge appears, the axis is decelerated to a standstill with the value from U006. It does not retrace the braking path traveled during the braking operation. It activates "Homing Attained" in the status word via bit ARFD.

Homing_method 21

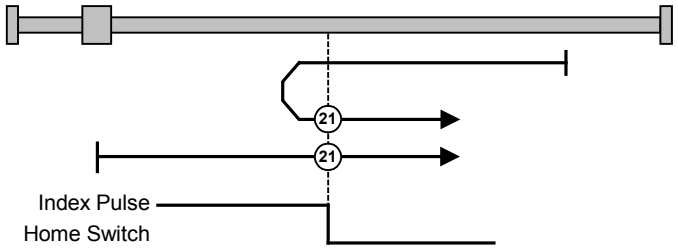

Fig. 8.5-13 Homing_method 21

㉑ Axis is positioned to the right of the BERO installed as a homing switch. The homing operation is started by bit 4 in the control word.

Behavior of MASTERDRIVES MC with F01

The axis traverses under speed control at homing approach velocity v_A [MD7] towards the Bero. When the Bero responds, the axis decelerates down to homing creep velocity v_R [MD6] and changes its direction of rotation. When the Bero falling edge appears, the axis is decelerated down to standstill under speed control. It retraces the deceleration path traveled as a result of the braking operation by executing a position-controlled return motion (positioning) towards the zero pulse. The axis then activates "Homing Attained" in the status word via bit ARFD.

Behavior of MASTERDRIVES without F01

The axis traverses under position control towards the Bero at the values stored in U006 (homing acceleration) and U873.01 (homing speed) towards the Bero. When the Bero responds, the axis changes its direction of rotation and travels at the same speed in the opposite direction. When the Bero falling edge appears, the axis is decelerated to a standstill with the value from U006. It does not retrace the braking path traveled during the braking operation. It activates "Homing Attained" in the status word via bit ARFD.

㉑ Axis is positioned on the BERO installed as a homing switch. The homing operation is started by bit 4 in the control word.

Behavior of MASTERDRIVES with F01

The axis traverses under speed control at homing creep velocity v_R [MD6] in a positive direction. When the Bero falling edge appears, the axis is decelerated down to standstill under speed control. It retraces the deceleration path traveled as a result of the braking operation by executing a position-controlled return motion (positioning) towards the zero pulse. The axis then activates "Homing Attained" in the status word via bit ARFD.

Behavior of MASTERDRIVES without F01

The axis traverses under position control towards the Bero at the values stored in U006 (homing acceleration) and U873.01 (homing speed) in a positive direction. When the Bero falling edge appears, the axis is decelerated to a standstill with the value from U006. It does not retrace the braking path traveled during the braking operation. It activates "Homing Attained" in the status word via bit ARFD.

Homing_methods 23 and 26

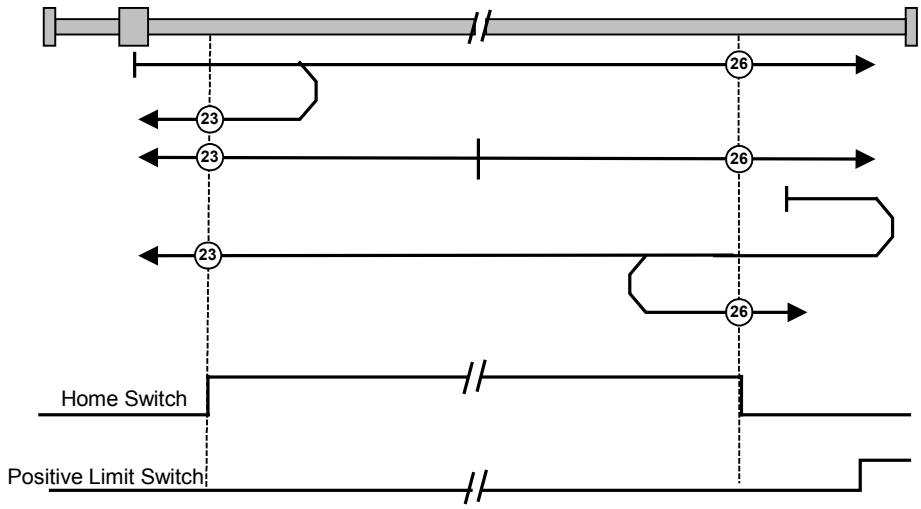

Fig. 8.5-14 Homing_methods 23 and 26

㉓ Axis is positioned to the left of the Bero. The homing operation is started by bit 4 in the control word.

Behavior of MASTERDRIVES MC with F01

The axis traverses under speed control at homing approach velocity v_A [MD7] towards the Bero. When the Bero responds, the axis decelerates down to homing creep velocity v_R [MD6] and changes its direction of rotation. When the Bero falling edge appears, the axis is decelerated down to standstill under speed control. It retraces the deceleration path traveled as a result of the braking operation by executing a position-controlled return motion (positioning) towards the zero pulse. The axis then activates "Homing Attained" in the status word via bit ARFD.

Behavior of MASTERDRIVES without F01

The axis traverses under position control towards the Bero at the values stored in U006 (homing acceleration) and U873.01 (homing speed) towards the Bero. When the Bero responds, the axis changes its direction of rotation and travels at the same speed in the opposite direction. When the Bero falling edge appears, the axis is decelerated to a standstill with the value from U006. It does not retrace the braking path traveled during the braking operation. It activates "Homing Attained" in the status word via bit ARFD.

㉓ Axis is positioned on the Bero installed as a homing switch. The homing operation is started by bit 4 in the control word.

Behavior of MASTERDRIVES MC with F01

The axis traverses under speed control at homing creep velocity v_R [MD6] in a negative direction. When the Bero falling edge appears, the axis is decelerated down to standstill under speed control. It retraces the deceleration path traveled as a result of the braking operation by executing a position-controlled return motion (positioning) towards the zero pulse. The axis then activates "Homing Attained" in the status word via bit ARFD.

Behavior of MASTERDRIVES without F01

The axis moves under position control in a negative direction at the values stored in U006 (homing acceleration) and U873.01 (homing speed). When the Bero falling edge appears, the axis is decelerated to a standstill with the value from U006. It does not retrace the braking path traveled during the braking operation. It activates "Homing Attained" in the status word via bit ARFD.

㉓ Axis is positioned to the right of the Bero. The homing operation is started by bit 4 in the control word.

Behavior of MASTERDRIVES MC with F01

The axis traverses under speed control at homing approach velocity v_A [MD7] towards the positive limit switch (reversal cam). When the cam responds, the axis changes its direction of rotation and travels towards the Bero. When the Bero responds, the axis decelerates down to homing creep velocity v_R [MD6]. When the Bero falling edge appears, the axis is decelerated down to standstill under speed control. It retraces the deceleration path traveled as a result of the braking operation by executing a position-controlled return motion (positioning) towards the zero pulse. The axis then activates "Homing Attained" in the status word via bit ARFD.

Behavior of MASTERDRIVES without F01

The axis moves under position control towards the positive limit switch (reversal cam) at the values stored in U006 (homing acceleration) and U873.01 (homing speed). When the reversal cam responds, the axis changes its direction of rotation and moves towards the Bero.

When the Bero responds, the axis maintains its velocity. When the Bero falling edge appears, the axis is decelerated to a standstill with the value from U006. It does not retrace the braking path traveled during the braking operation. It activates "Homing Attained" in the status word via bit ARFD.

㉖ Axis is positioned to the left of the Bero. The homing operation is started by bit 4 in the control word.

Behavior of MASTERDRIVES MC with F01

The axis traverses under speed control at homing approach velocity v_A [MD7] towards the Bero. When the Bero responds, the axis decelerates down to homing creep velocity v_R [MD6]. When the Bero falling edge appears, the axis is decelerated down to standstill under speed control. It retraces the deceleration path traveled as a result of the braking operation by executing a position-controlled return motion (positioning) towards the zero pulse. The axis then activates "Homing Attained" in the status word via bit ARFD.

Behavior of MASTERDRIVES without F01

The axis traverses under position control towards the Bero at the values stored in U006 (homing acceleration) and U873.01 (homing speed). When the Bero responds, the axis continues traversing at the same velocity. When the Bero falling edge appears, the axis is decelerated to a standstill with the value from U006. It does not retrace the braking path traveled during the braking operation. It activates "Homing Attained" in the status word via bit ARFD.

㉖ Axis is positioned on the Bero installed as a homing switch. The homing operation is started by bit 4 in the control word.

Behavior of MASTERDRIVES MC with F01

The axis traverses under speed control at homing creep velocity v_R [MD6] in a positive direction. When the Bero falling edge appears, the axis is decelerated down to standstill under speed control. It retraces the deceleration path traveled as a result of the braking operation by executing a position-controlled return motion (positioning) towards the zero pulse. The axis then activates "Homing Attained" in the status word via bit ARFD.

Behavior of MASTERDRIVES without F01

The axis moves under position control in a positive direction at the values stored in U006 (homing acceleration) and U873.01 (homing speed). When the Bero falling edge appears, the axis is decelerated to a standstill with the value from U006. It does not retrace the braking path traveled during the braking operation. It activates "Homing Attained" in the status word via bit ARFD.

㉖ Axis is positioned to the right of the Bero. The homing operation is started by bit 4 in the control word.

Behavior of MASTERDRIVES MC with F01

The axis traverses under speed control at homing approach velocity v_A [MD7] towards the positive limit switch (reversal cam). When the cam responds, the axis changes its direction of rotation and travels towards the Bero. When the Bero responds, the axis decelerates down to homing creep velocity v_R [MD6] and changes its direction of rotation. When the Bero falling edge appears, the axis is decelerated down to standstill under speed control. It retraces the deceleration path traveled as a result of the braking operation by executing a position-controlled return motion (positioning) towards the zero pulse. The axis then activates "Homing Attained" in the status word via bit ARFD.

Behavior of MASTERDRIVES without F01

The axis traverses under position control towards the positive limit switch (reversal cam) at the values stored in U006 (homing acceleration) and U873.01 (homing speed). When the reversal cam responds, the axis changes its direction of rotation and moves towards the Bero.

When the Bero responds, the axis changes its direction of rotation and continues moving at the same velocity in the opposite direction. When the Bero falling edge appears, the axis is decelerated to a standstill with the value from U006. It does not retrace the braking path traveled during the braking operation. It activates "Homing Attained" in the status word via bit ARFD.

Homing_methods 27 and 30

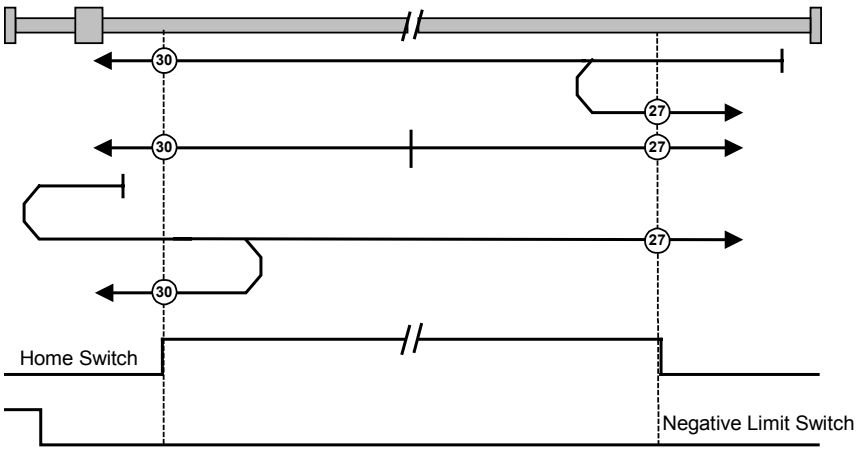

Fig. 8.5-15 Homing_methods 27 and 30

㉗ Axis is positioned to the right of the Bero. The homing operation is started by bit 4 in the control word.

Behavior of MASTERDRIVES MC with F01

The axis traverses under speed control at homing approach velocity v_A [MD7] towards the Bero. When the Bero responds, the axis decelerates down to homing creep velocity v_R [MD6] and changes its direction of rotation. When the Bero falling edge appears, the axis is decelerated down to standstill under speed control. It retraces the deceleration path traveled as a result of the braking operation by executing a position-controlled return motion (positioning) towards the zero pulse. The axis then activates "Homing Attained" in the status word via bit ARFD.

Behavior of MASTERDRIVES without F01

The axis moves under position control towards the Bero at the values stored in U006 (homing acceleration) and U873.01 (homing speed). When the Bero responds, the axis changes its direction of rotation and continues moving at the same velocity in the opposite direction. When the Bero falling edge appears, the axis is decelerated to a standstill with the value from U006. It does not retrace the braking path traveled during the braking operation. It activates "Homing Attained" in the status word via bit ARFD.

㉗ Axis is positioned on the Bero installed as a homing switch. The homing operation is started by bit 4 in the control word.

Behavior of MASTERDRIVES MC with F01

The axis traverses under speed control at homing creep velocity v_R [MD6] in a positive direction. When the Bero falling edge appears, the axis is decelerated down to standstill under speed control. It retraces the deceleration path traveled as a result of the braking operation by executing a position-controlled return motion (positioning) towards the zero pulse. The axis then activates "Homing Attained" in the status word via bit ARFD.

Behavior of MASTERDRIVES without F01

The axis moves under position control in a positive direction at the values stored in U006 (homing acceleration) and U873.01 (homing speed). When the Bero falling edge appears, the axis is decelerated to a standstill with the value from U006. It does not retrace the braking path traveled during the braking operation. It activates "Homing Attained" in the status word via bit ARFD

㉗ Axis is positioned to the left of the Bero. The homing operation is started by bit 4 in the control word.

Behavior of MASTERDRIVES MC with F01

The axis traverses under speed control at homing approach velocity v_A [MD7] towards the negative limit switch (reversal cam). When the cam responds, the axis changes its direction of rotation and travels towards the Bero. When the Bero responds, the axis decelerates down to homing creep velocity v_R [MD6]. When the Bero falling edge appears, the axis is decelerated down to standstill under speed control. It retraces the deceleration path traveled as a result of the braking operation by executing a position-controlled return motion (positioning) towards the zero pulse. The axis then activates "Homing Attained" in the status word via bit ARFD.

Behavior of MASTERDRIVES without F01

The axis traverses under position control towards the negative limit switch (reversal cam) at the values stored in U006 (homing acceleration) and U873.01 (homing speed). When the reversal cam responds, the axis changes its direction of rotation and moves towards the Bero.

When the Bero responds, the axis maintains its velocity. When the Bero falling edge appears, the axis is decelerated to a standstill with the value from U006. It does not retrace the braking path traveled during the braking operation. It activates "Homing Attained" in the status word via bit ARFD.

㉚ Axis is positioned to the right of the Bero. The homing operation is started by bit 4 in the control word.

Behavior of MASTERDRIVES MC with F01

The axis traverses under speed control at homing approach velocity v_A [MD7] towards the Bero. When the Bero responds, the axis decelerates down to homing creep velocity v_R [MD6]. When the Bero falling edge appears, the axis is decelerated down to standstill under speed control. It retraces the deceleration path traveled as a result of the braking operation by executing a position-controlled return motion (positioning) towards the zero pulse. The axis then activates "Homing Attained" in the status word via bit ARFD.

Behavior of MASTERDRIVES without F01

The axis traverses under position control towards the Bero at the values stored in U006 (homing acceleration) and U873.01 (homing speed). When the Bero responds, the axis continues moving at the same velocity. When the Bero falling edge appears, the axis is decelerated to a standstill with the value from U006. It does not retrace the braking path traveled during the braking operation. It activates "Homing Attained" in the status word via bit ARFD.

⑳ Axis is positioned on the Bero installed as a homing switch. The homing operation is started by bit 4 in the control word.

Behavior of MASTERDRIVES MC with F01

The axis traverses under speed control at homing creep velocity v_R [MD6] in a negative direction. When the Bero falling edge appears, the axis is decelerated down to standstill under speed control. It retraces the deceleration path traveled as a result of the braking operation by executing a position-controlled return motion (positioning) towards the zero pulse. The axis then activates "Homing Attained" in the status word via bit ARFD..

Behavior of MASTERDRIVES without F01

The axis moves under position control in a negative direction at the values stored in U006 (homing acceleration) and U873.01 (homing speed). When the Bero falling edge appears, the axis is decelerated to a standstill with the value from U006 (homing deceleration). It does not retrace the braking path traveled during the braking operation. It activates "Homing Attained" in the status word via bit ARFD.

⑳ Axis is positioned to the left of the Bero. The homing operation is started by bit 4 in the control word.

Behavior of MASTERDRIVES MC with F01

The axis traverses under speed control at homing approach velocity v_A [MD7] towards the negative limit switch (reversal cam). When the cam responds, the axis changes its direction of rotation and travels towards the Bero. When the Bero responds, the axis decelerates down to homing creep velocity v_R [MD6] and changes its direction of rotation. When the Bero falling edge appears, the axis is decelerated down to standstill under speed control. It retraces the deceleration path traveled as a result of the braking operation by executing a position-controlled return motion (positioning) towards the zero pulse. The axis then activates "Homing Attained" in the status word via bit ARFD.

Behavior of MASTERDRIVES without F01

The axis traverses under position control towards the negative limit switch (reversal cam) at the values stored in U006 (homing acceleration) and U873.01 (homing speed). When the reversal cam responds, the axis changes its direction of rotation and moves towards the Bero.

When the Bero responds, the axis changes its direction of rotation and continues moving at the same velocity in the opposite direction. When the Bero falling edge appears, the axis is decelerated to a standstill with the value from U006 (homing deceleration). It does not retrace the braking path traveled during the braking operation. It activates "Homing Attained" in the status word via bit ARFD.

Homing_methods 33 and 34

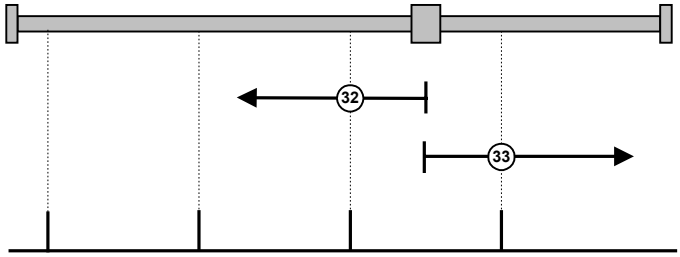

Fig. 8.5-16 Homing_methods 33 and 34

(33) Axis is homed without a Bero. The homing operation is started by bit 4 in the control word.

The axis traverses under speed control at homing creep velocity v_R [MD6] in a negative direction. When the zero pulse appears, the axis is decelerated down to standstill under speed control. It retraces the deceleration path traveled as a result of the braking operation by executing a position-controlled return motion (positioning) towards the zero pulse. The axis then activates "Homing Attained" in the status word via bit ARFD.

(34) Axis is homed without a Bero. The homing operation is started by bit 4 in the control word.

The axis traverses under speed control at homing creep velocity v_R [MD6] in a positive direction. When the zero pulse appears, the axis is decelerated down to standstill under speed control. It retraces the deceleration path traveled as a result of the braking operation by executing a position-controlled return motion (positioning) towards the zero pulse. The axis then activates "Homing Attained" in the status word via bit ARFD.

Homing methods using P178 = 0 and P647.01 = 1 or P648.01 = 1

Homing_method 35

Behavior of MASTERDRIVES MC with F01

With Homing_method 35, the coordinate is set as soon as homing is activated by the user program. In this case, the value from MD 3 is set as the actual position value.

After Homing_method 35 has been selected, a value other than 0 can be entered in MD 3 (home position coordinate) by means of object 4001h (Parameter Download, see also Subsection 8.5.3).

After a value has been entered in MD 3, parameter U502 can be set to 2 by the user, again using object 4001h.

Home position setting with object 607Ch=0

When control bit 4 is set, the position setpoint and actual position value are set to the "Home position coordinate" [MD3] and the Homing Attained bit set in the status word.

Home position setting with object 607Ch ><0

When control bit 4 is set, the axis accelerates to "Homing creep velocity" (object 6099.02h) in a positive or negative direction (depending on the sign of object 607Ch) under position control and traverses the home position offset. The position setpoint and actual value are then set to the "Home position coordinate" [MD3] and status bit Homing Attained is set.

Behavior of MASTERDRIVES without F01

With Homing_method 35, the coordinate is set as soon as homing is activated by the user program. In this case, the value from U874.02 which is connected to U877.03, is set as the actual position value. After Homing_ method 35 has been selected, a value other than 0 can be entered in U874.02 using a Parameter Download object.

Object 6099h Homing speeds

Object Homing Speed 6099h is used to set the velocity in subindex 1 at which the drive traverses while it is searching for the homing switch. The input is in 1000LU/min.

The velocity at which the drive traverses as it is searching for the zero pulse from the encoder is specified in subindex 2. The input is the same as for subindex 1, i.e. 1000LU/min. Subindex 2 is not supported on MC without F01.

For further details about objects, please refer to Profile DSP 402 or Chapters 7 "Functions" and 9 "Technology Option F01".

8.5.7.5 Profile Torque mode

This mode is supported only on the MASTERDRIVES MC without F01.

Profile Torque allows an axis to operate under torque control. To avoid involving the ramp-function generator in the basic unit, the setpoint is taken via the simple ramp-function generator 2 [FP786b]. To enable the simple RFG (unit LU) to interact with the basic unit, basic unit normalization 'per cent' has been selected as the LU, i.e. 100 % = 4000hex = 16384 dec.

If you want to set the ramp-function generator limits (torque limits) to ± 100 %, parameter U472.01, U472.02 must be set to ± 16384. Accordingly, 50 % equals 8192 (= 2000h), etc.

Profile Torque Mode can be set using the following objects:

The torque setpoint is specified via 6071h (target_torque). The acceleration ramp is defined by object 6087h (torque_slope). target_torque is specified per mille.

=> U008 = 6071h (Target_Torque) / 1000 × 4000h
(1000 per mille = 100 % = 4000h = 16384)

The same applies to 6087h (torque_slope). The unit of [6087h] is per mille / sec according to the CAN profile. The unit of adjusting velocity of the basic unit is LU / sec.
But LU is % in this case.
=> U471.01 = 6087h / 1000 × 4000h
(The CAN object 6088h (Torque Profile Type) belonging to Torque Mode can only be read out in MASTERDRIVES).

8.5.7.6 Setup mode

Setup mode is supported by MASTERDRIVES MC with and without F01. Setup mode is activated with object 6060h (Modes of Operation) mode FDh. A position-controlled traversing motion is activated (Jog) with bits 11 and 12 in the control word. Bit 11 acts on bit J-FWD on MCs with technology F01 and on bit D_FWD with B-Pos. Bit 12 acts on J-BWD on MCs with technology F01 and on D_BWD with B-Pos. The velocity is supplied by parameter U510.01 or U510.02 [FP819] on MCs with technology F01. Bit 6 in the control word toggles between high and low velocity [F_S]. The B-Pos receives its setpoints via the connectors linked to the B-Pos block 'Setpoint transfer' [FP789a].

Setup mode can be set by means of the following objects:

Object 607Dh defines the position of the positive and negative software limit switches in LU.

On MCs without F01, object 6081h specifies the travel velocity in Setup mode and objects 6083h and 6084h sets the acceleration or deceleration.

8.5.7.7 Automatic Position mode

Automatic Position Mode is supported only on MASTERDRIVES MC with F01. It is equivalent to technology mode [5].

The technology bits are driven via the technology control word 4040h [FP 809]. The basic unit is controlled via control word 6040h.

The technology checkback signals are passed via object 4041h [FP 811] and those of the basic unit via object 6041h.

For more detailed information about this mode, please refer to the MASTERDRIVES Motion Control compendium and the Motion Control for MASTERDRIVES MC manual.

8.5.7.8 Automatic Single Block mode

Automatic Single Block Mode is supported only on MASTERDRIVES MC with F01. It is equivalent to technology mode [6].

The technology bits are driven via technology control word 4040h [FD 809]. The basic unit is controlled via control word 6040h.

The technology checkbacks only run via object 4041h [FD811], the checkbacks of the basic unit via object 6041h.

For more detailed information about this mode, please refer to the MASTERDRIVES Motion Control compendium and the Motion Control for MASTERDRIVES MC manual.

8.5.8 Diagnostics and troubleshooting

8.5.8.1 Error and alarm displays on basic unit

In the case of communication errors between the CAN bus and the CBC, appropriate errors and/or alarms are displayed on the PMU or OP1S of the basic unit.

CB alarms

Alarm	Meaning	Error-code (hex)	Meaning
A083	CB alarm Possible cause: Errored CAN messages are being received or transmitted and the internal error counter has exceeded the alarm limit. The errored CAN messages are ignored. The data last transmitted remain valid. If the errored CAN messages are process data, the message failure monitoring function (P722) may respond with error F082 (DPR message failure). If the PKW CAN messages are errored, the converter does not respond. Remedial measure: • Check parameter P720 (baud rate) for every node and correct if necessary. • Check the cable link between nodes. • Check the cable shield. The bus cable must be shielded at both ends. • Reduce electromagnetic interference. • Replace the CBC board.	7580	communication warning 1

Alarm	Meaning	Error-code (hex)	Meaning
A084	CB alarm Possible cause: Errored CAN messages are being received or transmitted and the internal error counter has exceeded the fault limit. The errored CAN messages are ignored. The data last transmitted remain valid. If the errored CAN messages are process data, the message failure monitoring function (P722) may respond with error F082 (DPR message failure). If the PKW CAN messages are errored, the converter does not respond. Remedial measure: • Check parameter P720 (baud rate) for every node and correct if necessary. • Check the CAN bus master. • Check the cable connection between bus nodes. • Check the cable shield. The bus cable must be shielded at both ends. • Reduce electromagnetic interference. • Replace the CBC board.	7581	communication warning 2
A085	CB alarm A "Life guarding event" has occurred. The converter has changed state according to the setting in P719. Cause: No node guarding messages have been received from the master.	8130	Life Time error
A086	CB alarm The PDO received is shorter than the parameterized PDO. Alarm A086 has been activated. The identifier to which the alarm applies is displayed in bytes 6 and 7 (fault value). The alarm will be canceled again when the next PDO is positively received.	8210	PDO not processed due to length error

CB error display

Error	Meaning
F 080	**TB/CB Initialization fault:** CBC is incorrectly initialized and parameterized via the dual port RAM interface (DPR interface) • Error in CBC parameter(s), cause of parameterization error in diagnostic parameter r732.01 ⇒ Correct CB parameter P711-P721 Correct CB bus address P918 • CBC defective ⇒ Replace CBC Note: If the MASTERDRIVES boots with an error F80, the parameter channel is disabled. MASTERDRIVES cannot then process any SDO tasks.
F 081	**OptBrt heartbeat counter:** The CBC has ceased processing the heartbeat counter. • CBC incorrectly inserted in the electronics box ⇒ Check CBC • CBC defective ⇒ Replace CBC
F 082	**TB/CB message failure:** The message failure monitoring time set in parameter P722 has run out. **NOTE**: The message failure monitoring time should be set to 0 for CANopen since data are not always exchanged cyclically and message failure is monitored by the node guarding function. • CAN bus master has failed (green LED on CBC is off; with cyclical data exchange only) • Cable connection between bus nodes interrupted (green LED on CBC is off) ⇒ Check bus cable • Electromagnetic interference on bus cable too high ⇒ Observe EMC guidelines • Message monitoring time is set too short (green LED on CBC flashing) ⇒ Increase parameter value in P722 • CBC defective ⇒ Replace CBC

Error	Meaning
F 151	**Fault 4 Function blocks** A normalization parameter could not be read out as the CBC was booting. Note: This error is activated only if it is connected to bit 1 of the 2nd word of the CB receive data. Bits 0-4 for each of the failed parameter tasks are set in parameter r732.19. ♦ Bit 0: P205 could not be read ⇒ Read out object 2200.01h with SDO task ♦ Bit 1: P353.01 could not be read ⇒ Read out object 2200.02h with SDO task ♦ Bit 2: P353.02 could not be read ⇒ Read out object 2200.03h with SDO task ♦ Bit 3: U857 could not be read ⇒ Read out object 2200.04h with SDO task ♦ Bit 4: U007 could not be read ⇒ Read out object 6098h with SDO task

8.5.8.2 Evaluation of CBC diagnostic parameter

The CBC stores diagnostic data in a diagnostic buffer to support commissioning and servicing activities. The diagnostic information can be read out with indexed parameter r732.i (CB/TB diagnosis). This parameter is displayed in hexadecimal notation.

The CBC diagnostics buffer is assigned as follows:

	Meaning
r 732.01	Error identifier configuration (1)
r 732.02	Not used
r 732.03	Not used
r 732.04	Not used
r 732.05	Not used
r 732.06	Not used
r 732.07	Not used
r 732.08	Not used
r 732.09	Not used
r 732.10	Not used
r 732.11	Not used
r 732.12	Not used
r 732.13	Not used
r 732.14	Counter for properly processed PKW tasks (incl. response)
r 732.15	Counter for errors in processing PKW tasks (incl. response)
r 732.16	Error type of error in processing PKW tasks
r 732.17	Error value of error in processing PKW tasks
r 732.18	Not used
r 732.19	Parameter which cannot be read out during initialization. (only MC)
r 732.20	Not used
r 732.21	Not used
r 732.22	Not used
r 732.23	Not used
r 732.24	Not used
r 732.25	Not used
r 732.26	Software version
r 732.27	Software identifier
r 732.28	Software date 'Day/Month'
r 732.29	Software date 'Year'

8.5.8.3 Meaning of CBC diagnostics

r732.01 Error identifier configuration

If the CB parameters contain an invalid value or an invalid combination of parameter values, the converter switches to fault status with error F80 and fault value 5 (r949). You can read out the cause of the fault via index 01 of CB diagnostic parameter r732.

Value (hex)	Meaning
0x0	No error
0x1	Incorrect bus address
0xC	Error in config status
0x17	Invalid baud rate
0x23	Incorrect CAN protocol type (0: Layer 2, 1: CanOpen)
0x101	Invalid mapping of 1st RxPDO
0x102	Invalid transmission type of 1st RxPDO
0x201	Invalid mapping of 2nd RxPDO
0x202	Invalid transmission type of 2nd RxPDO
0x301	Invalid mapping of 3rd RxPDO
0x302	Invalid transmission type of 3rd RxPDO
0x401	Invalid mapping of 4th RxPDO
0x402	Invalid transmission type of 4th RxPDO
0x111	Invalid mapping of 1st TxPDO
0x112	Invalid transmission type of 1st TxPDO
0x211	Invalid mapping of 2nd TxPDO
0x212	Invalid transmission type of 2nd TxPDO
0x311	Invalid mapping of 3rd TxPDO
0x312	Invalid transmission type of 3rd TxPDO
0x411	Invalid mapping of 4th TxPDO
0x412	Invalid transmission type of 4th TxPDO
0x444	Invalid device (not MCF01 or MPF01)

r732.14 Counter for correctly processed PKW tasks (incl. response) since power ON.

CAUTION This is a counter for PKW tasks. It does not count correctly processed SDO tasks! Between 0 and 4 PKW tasks are executed depending on the SDO task (see table of objects in Subsection 8.5.1 and homing methods table, Subsection 8.5.7.4).

r732.15 Counter for errors in processing PKW tasks (incl. response) since power ON.

CAUTION The errors that occur in processing SDO tasks are not counted!

r732.16 Error type with PKW task "processing error".

An error identifier is entered in this parameter if an error occurs in the processing of PKW tasks.

Value (hex)	Meaning
0x0	No error
0x4	DPR error: errored status byte
0x5	DPR error: errored control byte, programming error in task/response channel or an attempt has been made using object 4001 to start a parameter task which has not been implemented
0xA	Programming error in parameter status
0xB	The basic unit has not processed the transmitted parameter task within the timeout of 150 ms (or 300 ms).
PKW-PKE/IND	With response identifier 7: Task cannot be executed or with response identifier 8: No PKW control command source status

r732.17 Error value with PKW task "processing error".

Contains additional information about a particular error type.

With error types 0x4 and 0x5:

Value (hex)	Meaning
0x0	No error
0x1	Error in task channel
0x2	Error in response channel
0x66	Channel not wide enough
0x6A	Task not implemented

With error types 0xA and 0xB:

Value (hex)	Meaning
PKW-PKE/IND	Task identifier and parameter index of transmitted parameter task

Error value for a PKW response with response identifier 7 or 8:

See Subsection 8.5.3.1, Parameter Download.

8.5.9 CANopen EDS

CAN-EDS (Electronic Data Sheet) passes the IDs of the objects that are available in the device to a commissioning tool. These objects are set to their defaults.

Description

You need an EDS to be able to work with a CANopen network configuring tool.

Using this EDS, you can inform the Commissioning Tool network which objects and functions are made available by the connected CANopen device.

Application

The CANopen EDS for the MASTERDRIVES with technology option F01 or B-Pos contains all the available objects of the device.

Not all EDS objects are always available in the device. Those which are available are dependent on the PDO mapping via parameters P711 to P718. Consequently, a DCF file needs to be generated from the EDS. This DCF therefore contains the bus address setting, the baud rate and the mapped objects.

To find out which objects are mapped, read the conventions for PDO mapping in Subsection 8.5.2.4. Configure your DCF accordingly.

Example:

You have selected PDO 29 from the table of receive PDOs in parameter 712.

This contains the following objects

60FFh	target_velocity
3003h	Free object 3003h / 16-bit
3004h	Free object 3004h / 16-bit

Object 60FFh is always available in the device provided that the correct interconnection is made in the MASTERDRIVES device. This object has no effect on the EDS.

Objects 3003h and 3004h are not available if they have not been mapped via parameters P712 - P714 in a premapped PDO to the device.

This means that these objects need to be transferred to the DCF.

The three thousand objects that are not mapped to a PDO must not be transferred to the DCF.

8.5.10 Parameterization

8.5.10.1 Parameterization for the CBC CANopen with MASTERDRIVES MC_F01 and MASTERDRIVES MC_B-Pos

The CD "Drive Monitor" contains scriptfiles for the parameterization of MASTERDRIVES MC_F01 and MASTERDRIVES MC_B-Pos.

You must adapt these scriptfiles to suit your application.

The CB parameters, receive connectors, send parameters and connectors must be "wired up" to suit your application.

8.5.11 Logical interconnections for control and status words

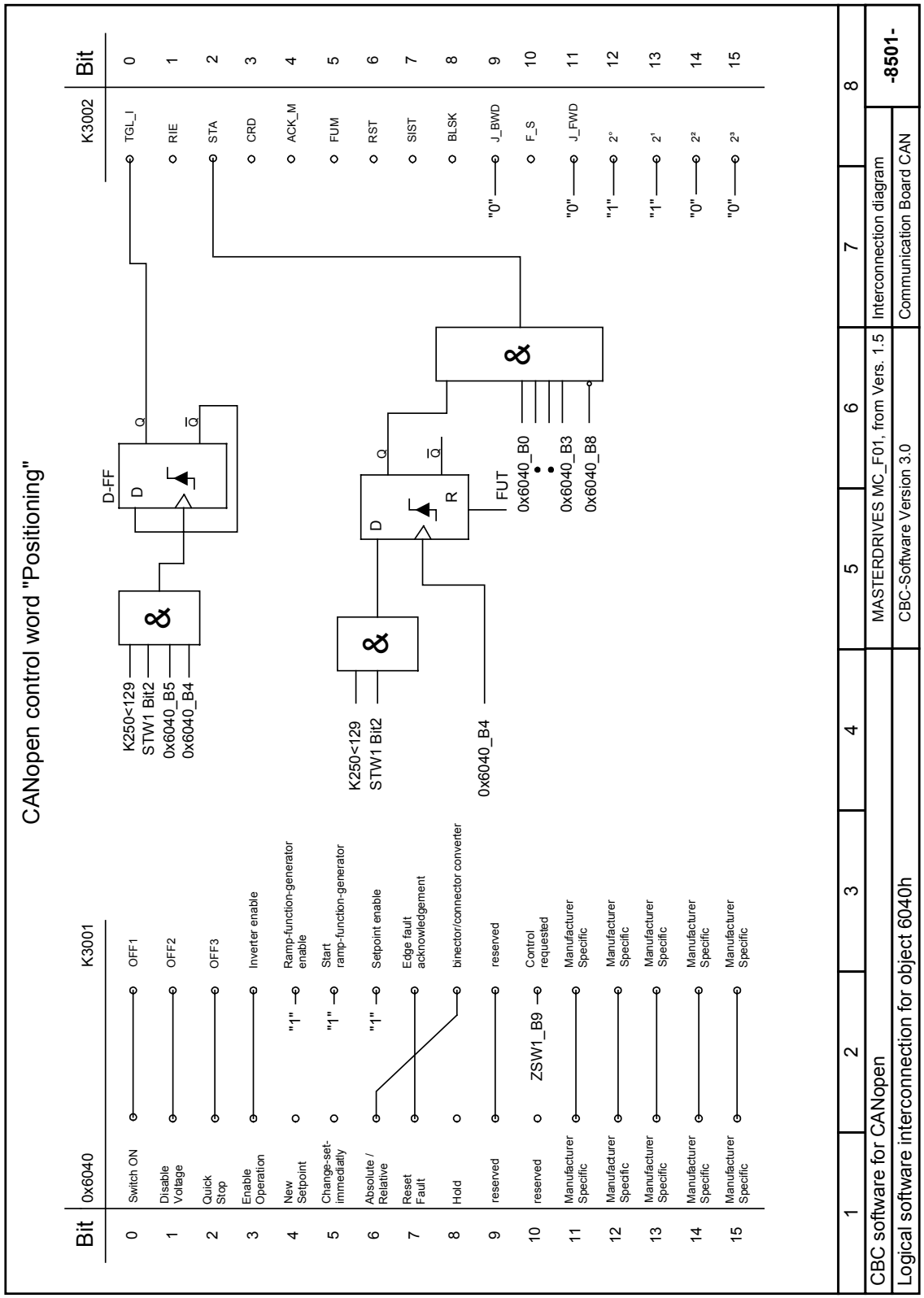

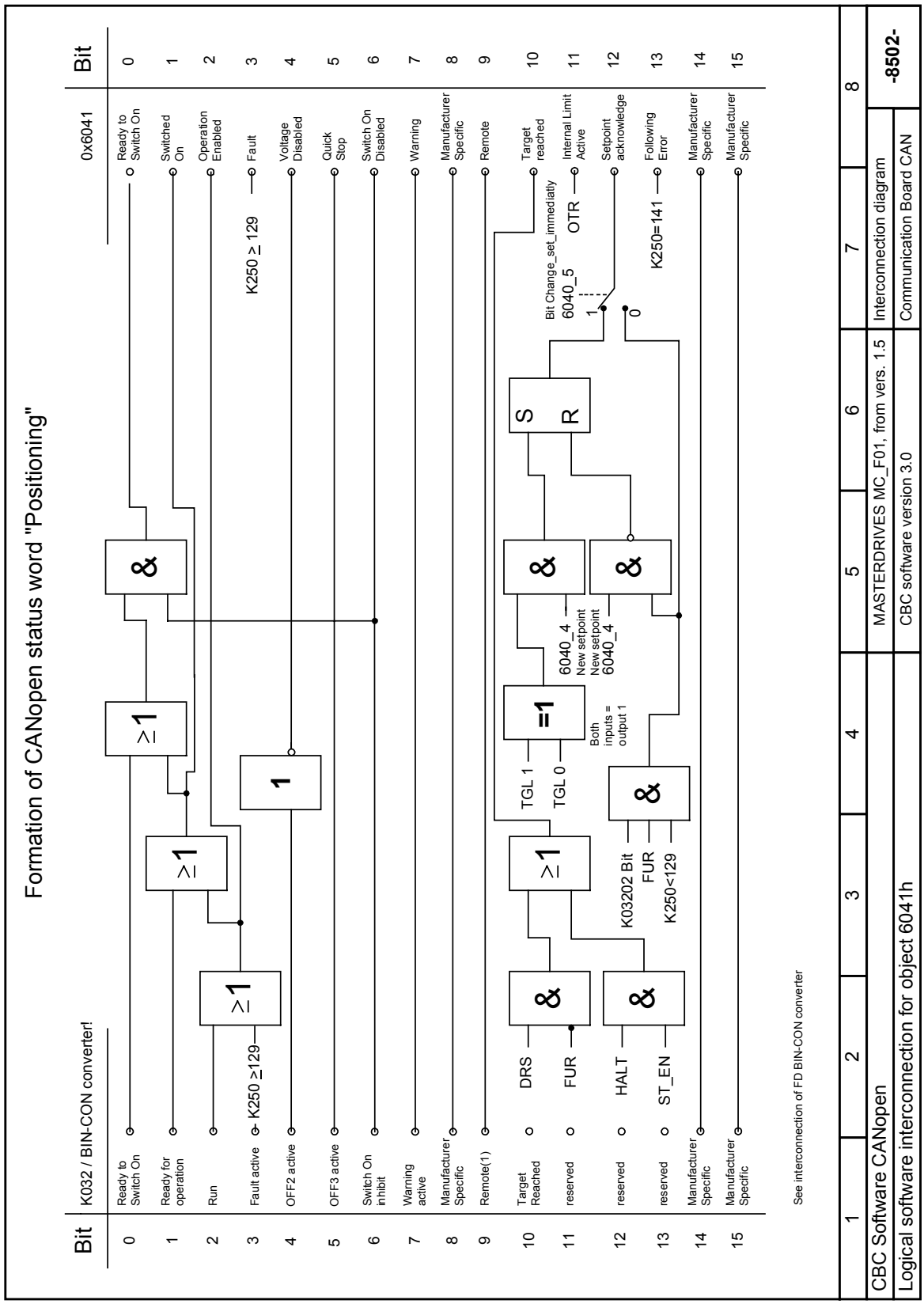
Formation of CANopen status word "Positioning"
Bit
K032 / BIN-CON converter!
0x6041
Bit
0 Ready to Switch On
1 Ready for operation
2 Run
3 Fault active
4 OFF2 active
5 OFF3 active
6 Switch On inhibit
7 Warning active
8 Manufacturer Specific
9 Remote(1)
10 Target Reached
11 reserved
12 reserved
13 reserved
14 Manufacturer Specific
15 Manufacturer Specific
DRS
FUR
HALT
ST_EN
K250 ≥129
K250 ≥ 129
K03202 Bit
FUR
K250<129
TGL 1
TGL 0
Both inputs = output 1
6040_4 New setpoint
Bit Change_set_immediatly
6040_5
OTR
K250=141
Ready to Switch On
Switched On
Operation Enabled
Fault
Voltage Disabled
Quick Stop
Switch On Disabled
Warning
Manufacturer Specific
Remote
Target reached
Internal Limit Active
Setpoint acknowledge
Following Error
Manufacturer Specific
Manufacturer Specific
See interconnection of FD BIN-CON converter
CBC Software CANopen
MASTERDRIVES MC_F01, from vers. 1.5
Interconnection diagram
-8502-
Logical software interconnection for object 6041h
CBC software version 3.0
Communication Board CAN

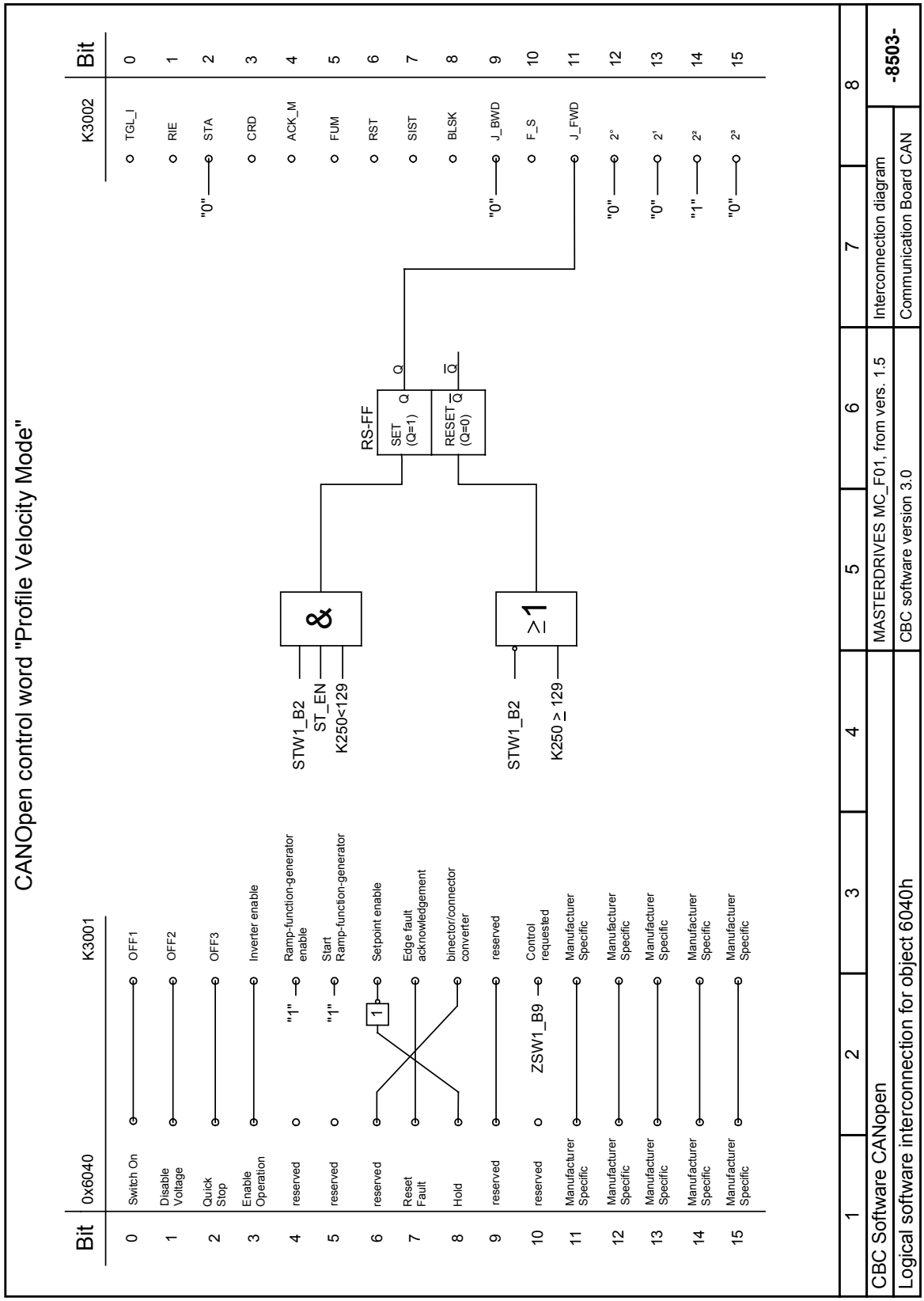
CANOpen control word "Profile Velocity Mode"
Bit
0x6040
K3001
0 Switch On — OFF1
1 Disable Voltage — OFF2
2 Quick Stop — OFF3
3 Enable Operation — Inverter enable
4 reserved — "1" — Ramp-function-generator enable
5 reserved — "1" — Start Ramp-function-generator
6 reserved — 1 — Setpoint enable
7 Reset Fault — Edge fault acknowledgement
8 Hold — binector/connector converter
9 reserved — reserved
10 reserved — ZSW1_B9 — Control requested
11 Manufacturer Specific — Manufacturer Specific
12 Manufacturer Specific — Manufacturer Specific
13 Manufacturer Specific — Manufacturer Specific
14 Manufacturer Specific — Manufacturer Specific
15 Manufacturer Specific — Manufacturer Specific
STW1_B2
ST_EN
K250<129
&
RS-FF
SET (Q=1)
RESET (Q=0)
Q
STW1_B2
K250 ≥ 129
≥1
K3002
Bit
0 TGL_I
1 RIE
2 "0" — STA
3 CRD
4 ACK_M
5 FUM
6 RST
7 SIST
8 BLSK
9 "0" — J_BWD
10 F_S
11 J_FWD
12 "0" — 2⁰
13 "0" — 2¹
14 "1" — 2²
15 "0" — 2³
1 2 3 4 5 6 7 8
CBC Software CANopen
MASTERDRIVES MC_F01, from vers. 1.5
Interconnection diagram
-8503-
Logical software interconnection for object 6040h
CBC software version 3.0
Communication Board CAN

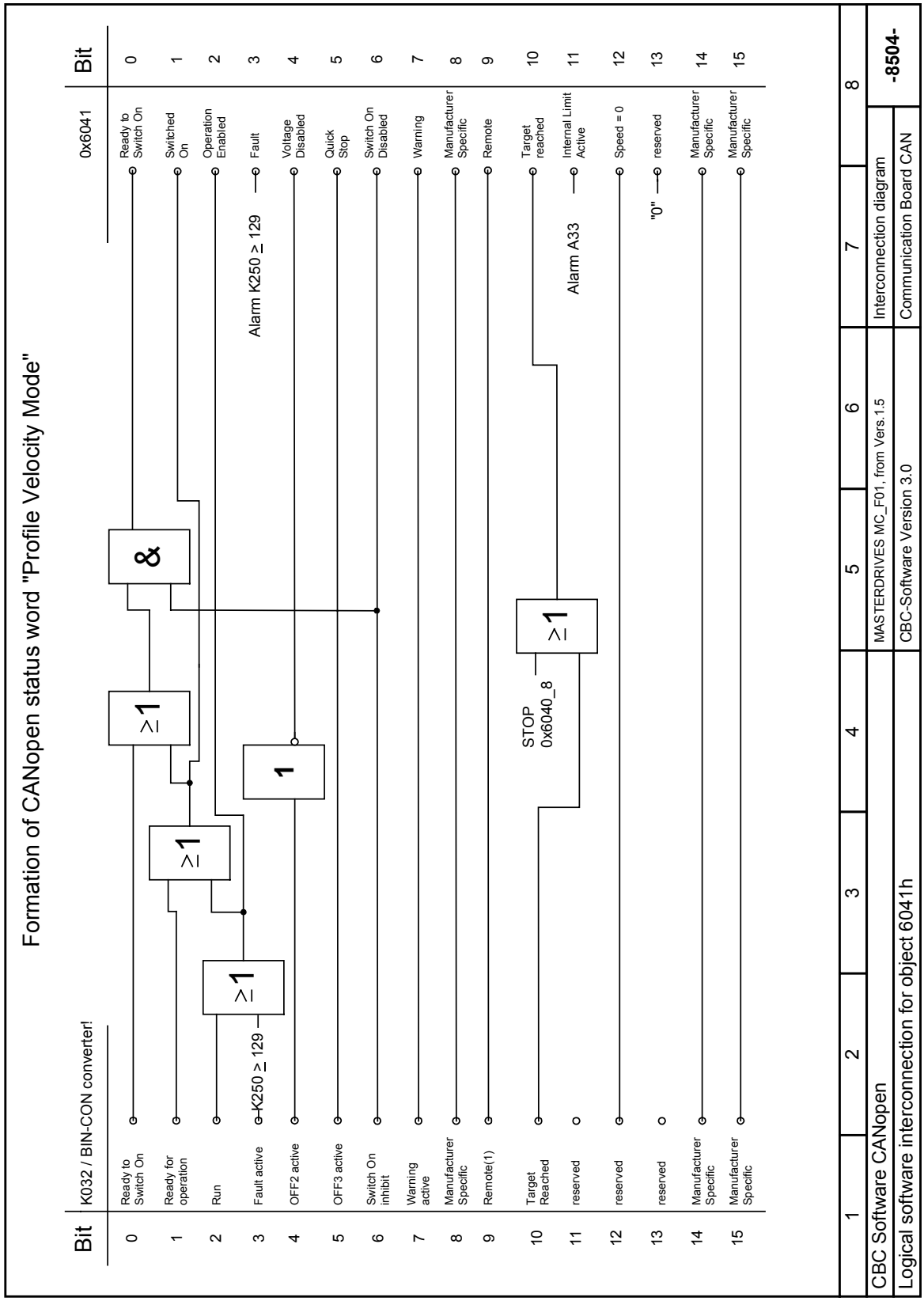
Formation of CANopen status word "Profile Velocity Mode"
Bit
K032 / BIN-CON converter!
0x6041
Bit
0 Ready to Switch On
1 Ready for operation
2 Run
3 Fault active
4 OFF2 active
5 OFF3 active
6 Switch On inhibit
7 Warning active
8 Manufacturer Specific
9 Remote(1)
10 Target Reached
11 reserved
12 reserved
13 reserved
14 Manufacturer Specific
15 Manufacturer Specific
K250 ≥ 129
≥1
≥1
≥1
&
1
STOP 0x6040_8
≥1
Alarm K250 ≥ 129
Alarm A33
"0"
Ready to Switch On
Switched On
Operation Enabled
Fault
Voltage Disabled
Quick Stop
Switch On Disabled
Warning
Manufacturer Specific
Remote
Target reached
Internal Limit Active
Speed = 0
reserved
Manufacturer Specific
Manufacturer Specific
1 2 3 4 5 6 7 8
CBC Software CANopen
MASTERDRIVES MC_F01, from Vers.1.5
Interconnection diagram
-8504-
Logical software interconnection for object 6041h
CBC-Software Version 3.0
Communication Board CAN

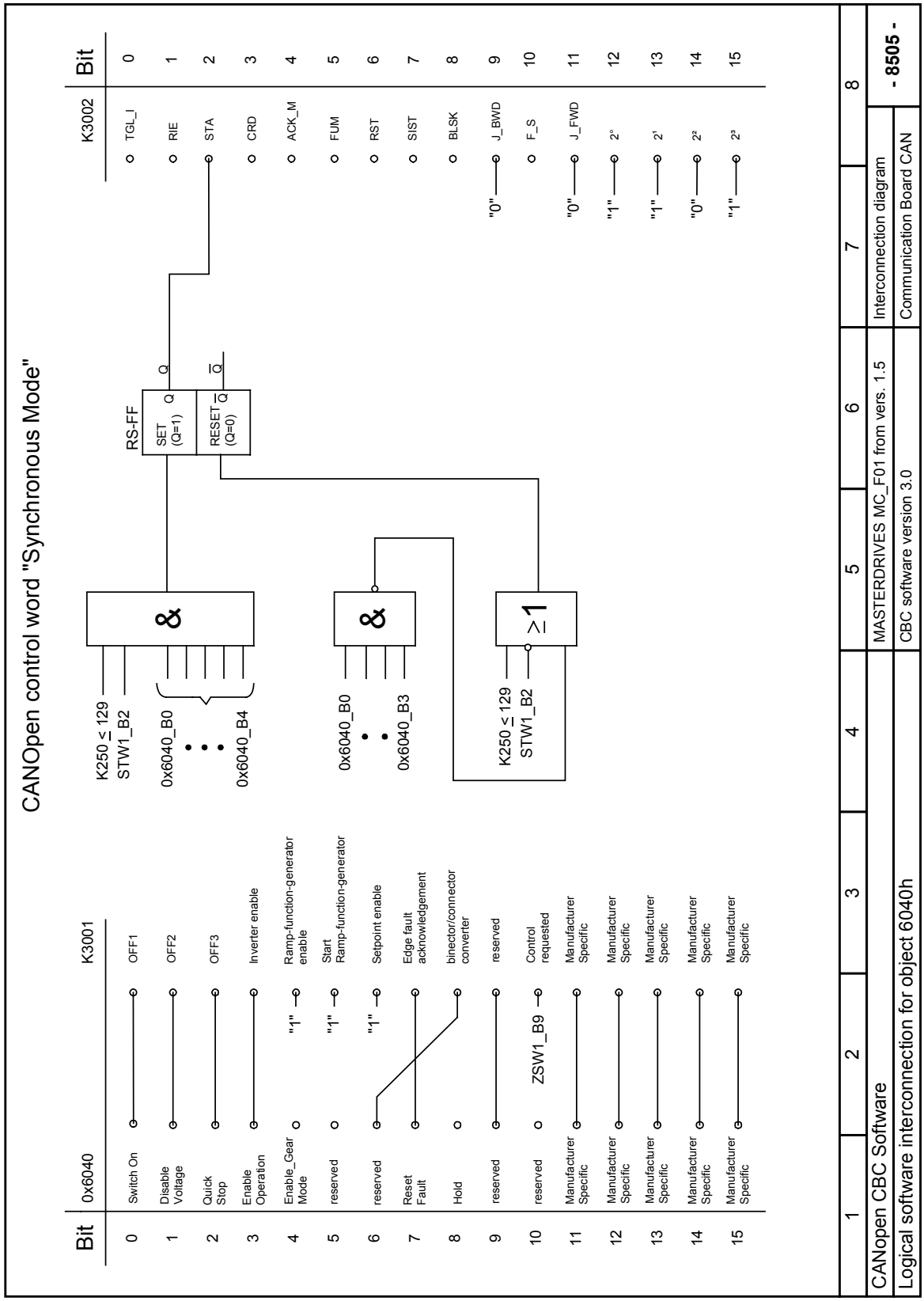
CANOpen control word "Synchronous Mode"
Bit
0x6040
K3001
0 Switch On — OFF1
1 Disable Voltage — OFF2
2 Quick Stop — OFF3
3 Enable Operation — Inverter enable
4 Enable_Gear Mode — "1" — Ramp-function-generator enable
5 reserved — "1" — Start Ramp-function-generator
6 reserved — "1" — Setpoint enable
7 Reset Fault — Edge fault acknowledgement
8 Hold — binector/connector converter
9 reserved — reserved
10 reserved — ZSW1_B9 — Control requested
11 Manufacturer Specific — Manufacturer Specific
12 Manufacturer Specific — Manufacturer Specific
13 Manufacturer Specific — Manufacturer Specific
14 Manufacturer Specific — Manufacturer Specific
15 Manufacturer Specific — Manufacturer Specific
K250 ≤ 129
STW1_B2
0x6040_B0
0x6040_B4
&
RS-FF
SET (Q=1)
RESET (Q=0)
Q
Q̄
0x6040_B0
0x6040_B3
&
K250 ≤ 129
STW1_B2
≥1
K3002
Bit
0 TGL_I
1 RIE
2 STA
3 CRD
4 ACK_M
5 FUM
6 RST
7 SIST
8 BLSK
9 "0" — J_BWD
10 F_S
11 "0" — J_FWD
12 "1" — 2⁰
13 "1" — 2¹
14 "0" — 2²
15 "1" — 2³
1
2
3
4
5
6
7
8
CANopen CBC Software
MASTERDRIVES MC_F01 from vers. 1.5
Interconnection diagram
- 8505 -
Logical software interconnection for object 6040h
CBC software version 3.0
Communication Board CAN

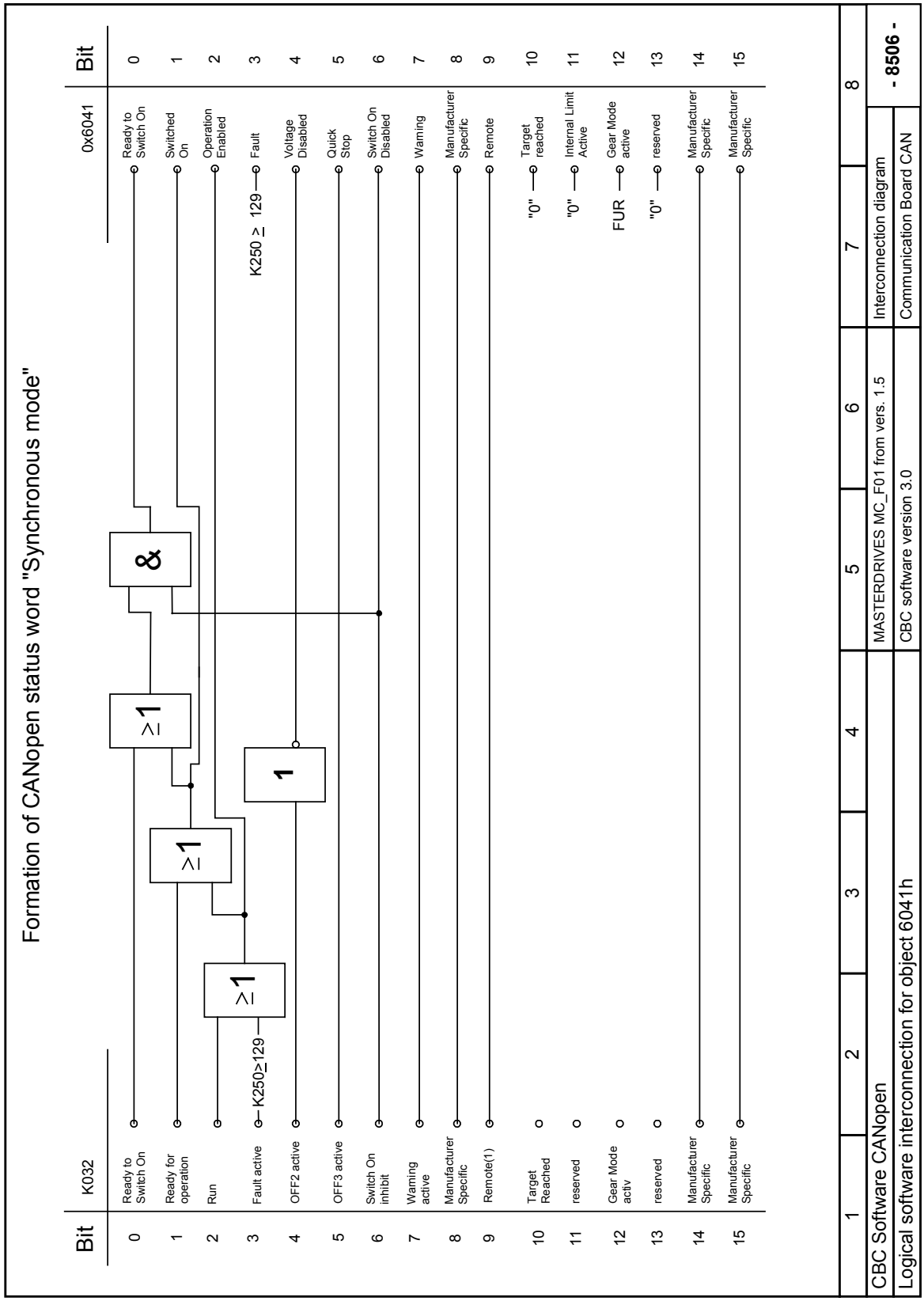
Formation of CANopen status word "Synchronous mode"
Bit
K032
0x6041
Bit
0 Ready to Switch On
1 Ready for operation
2 Run
3 Fault active
4 OFF2 active
5 OFF3 active
6 Switch On inhibit
7 Warning active
8 Manufacturer Specific
9 Remote(1)
10 Target Reached
11 reserved
12 Gear Mode activ
13 reserved
14 Manufacturer Specific
15 Manufacturer Specific
≥1
≥1
≥1
&
1
K250≥129
K250 ≥ 129
Ready to Switch On
Switched On
Operation Enabled
Fault
Voltage Disabled
Quick Stop
Switch On Disabled
Warning
Manufacturer Specific
Remote
Target reached
Internal Limit Active
Gear Mode active
reserved
Manufacturer Specific
Manufacturer Specific
"0"
"0"
FUR
"0"
1
2
3
4
5
6
7
8
CBC Software CANopen
MASTERDRIVES MC_F01 from vers. 1.5
Interconnection diagram
- 8506 -
Logical software interconnection for object 6041h
CBC software version 3.0
Communication Board CAN

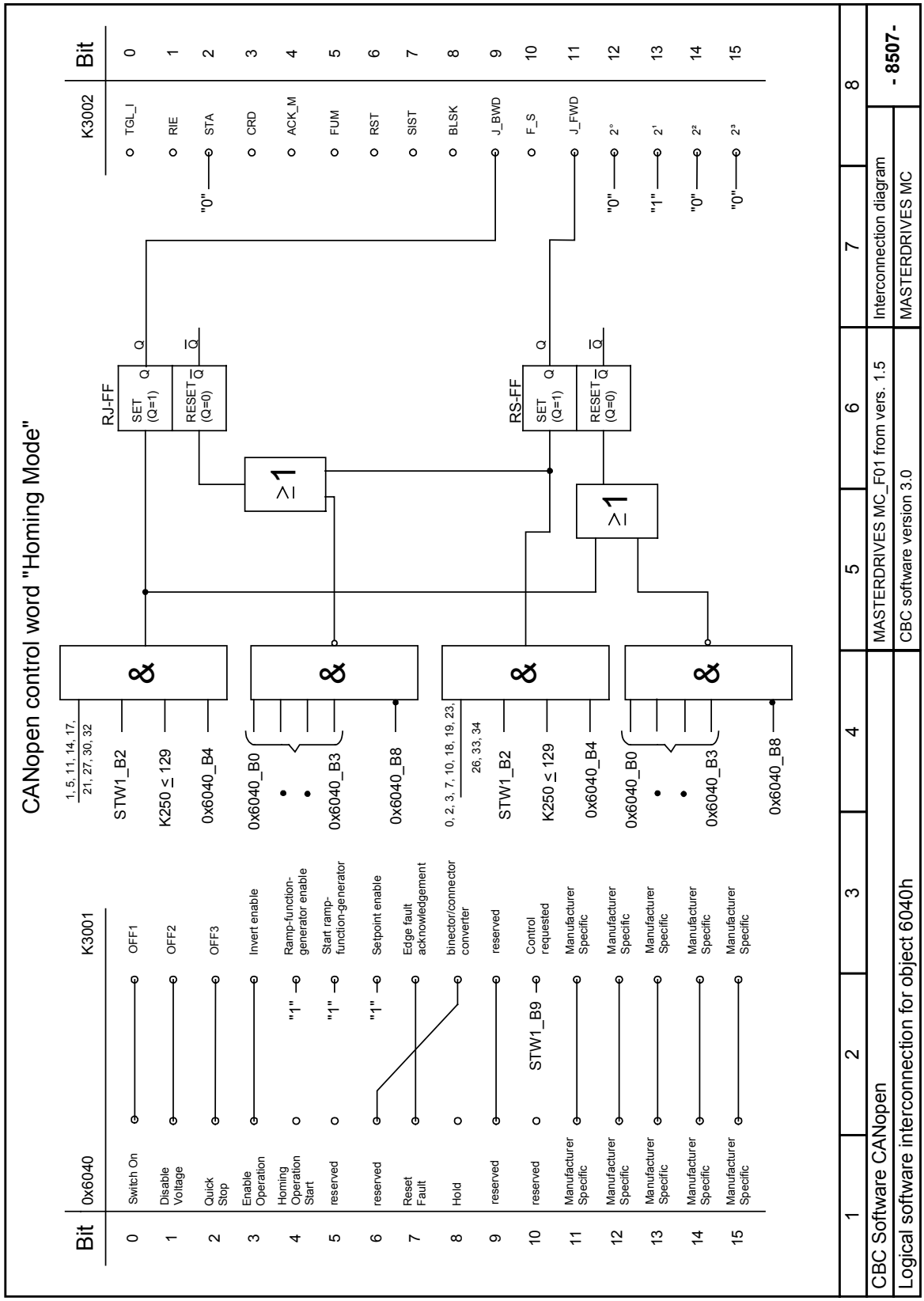
CANopen control word "Homing Mode"
Bit
0x6040
K3001
0 Switch On OFF1
1 Disable Voltage OFF2
2 Quick Stop OFF3
3 Enable Operation Invert enable
4 Homing Operation Start Ramp-function-generator enable "1"
5 reserved Start ramp-function-generator "1"
6 reserved Setpoint enable "1"
7 Reset Fault Edge fault acknowledgement
8 Hold binector/connector converter
9 reserved reserved
10 reserved STW1_B9 Control requested
11 Manufacturer Specific Manufacturer Specific
12 Manufacturer Specific Manufacturer Specific
13 Manufacturer Specific Manufacturer Specific
14 Manufacturer Specific Manufacturer Specific
15 Manufacturer Specific Manufacturer Specific
1, 5, 11, 14, 17, 21, 27, 30, 32
STW1_B2
K250 ≤ 129
0x6040_B4
0x6040_B0
0x6040_B3
0x6040_B8
0, 2, 3, 7, 10, 18, 19, 23, 26, 33, 34
STW1_B2
K250 ≤ 129
0x6040_B4
0x6040_B0
0x6040_B3
0x6040_B8
RJ-FF
SET (Q=1)
RESET (Q=0)
RS-FF
SET (Q=1)
RESET (Q=0)
≥1
≥1
K3002
Bit
0 TGL_I
1 RIE
2 STA "0"
3 CRD
4 ACK_M
5 FUM
6 RST
7 SIST
8 BLSK
9 J_BWD
10 F_S
11 J_FWD
12 2° "0"
13 2¹ "1"
14 2² "0"
15 2³ "0"
1 2 3 4 5 6 7 8
CBC Software CANopen
Logical software interconnection for object 6040h
MASTERDRIVES MC_F01 from vers. 1.5
CBC software version 3.0
Interconnection diagram
MASTERDRIVES MC
- 8507-

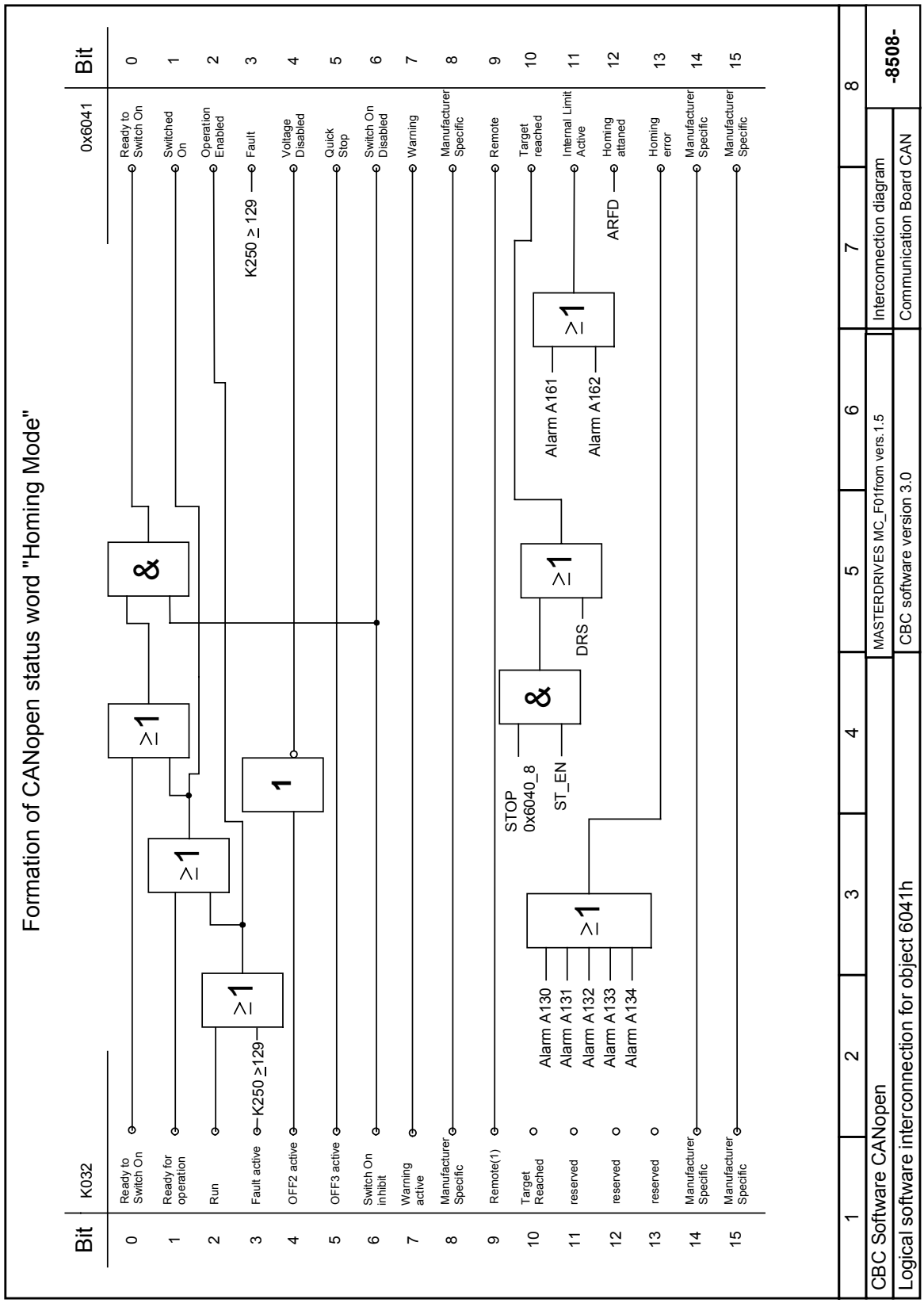
Formation of CANopen status word "Homing Mode"
Bit
K032
0x6041
Bit
0 Ready to Switch On
1 Ready for operation
2 Run
3 Fault active
4 OFF2 active
5 OFF3 active
6 Switch On inhibit
7 Warning active
8 Manufacturer Specific
9 Remote(1)
10 Target Reached
11 reserved
12 reserved
13 reserved
14 Manufacturer Specific
15 Manufacturer Specific
Ready to Switch On
Switched On
Operation Enabled
Fault
Voltage Disabled
Quick Stop
Switch On Disabled
Warning
Manufacturer Specific
Remote
Target reached
Internal Limit Active
Homing attained
Homing error
Manufacturer Specific
Manufacturer Specific
K250 ≥ 129
K250 ≥129
STOP
0x6040_8
ST_EN
DRS
ARFD
Alarm A130
Alarm A131
Alarm A132
Alarm A133
Alarm A134
Alarm A161
Alarm A162
&
≥1
1
1 2 3 4 5 6 7 8
CBC Software CANopen
MASTERDRIVES MC_F01from vers.1.5
Interconnection diagram
-8508-
Logical software interconnection for object 6041h
CBC software version 3.0
Communication Board CAN

8.5.12 General plans of interconnections in MASTERDRIVES MC

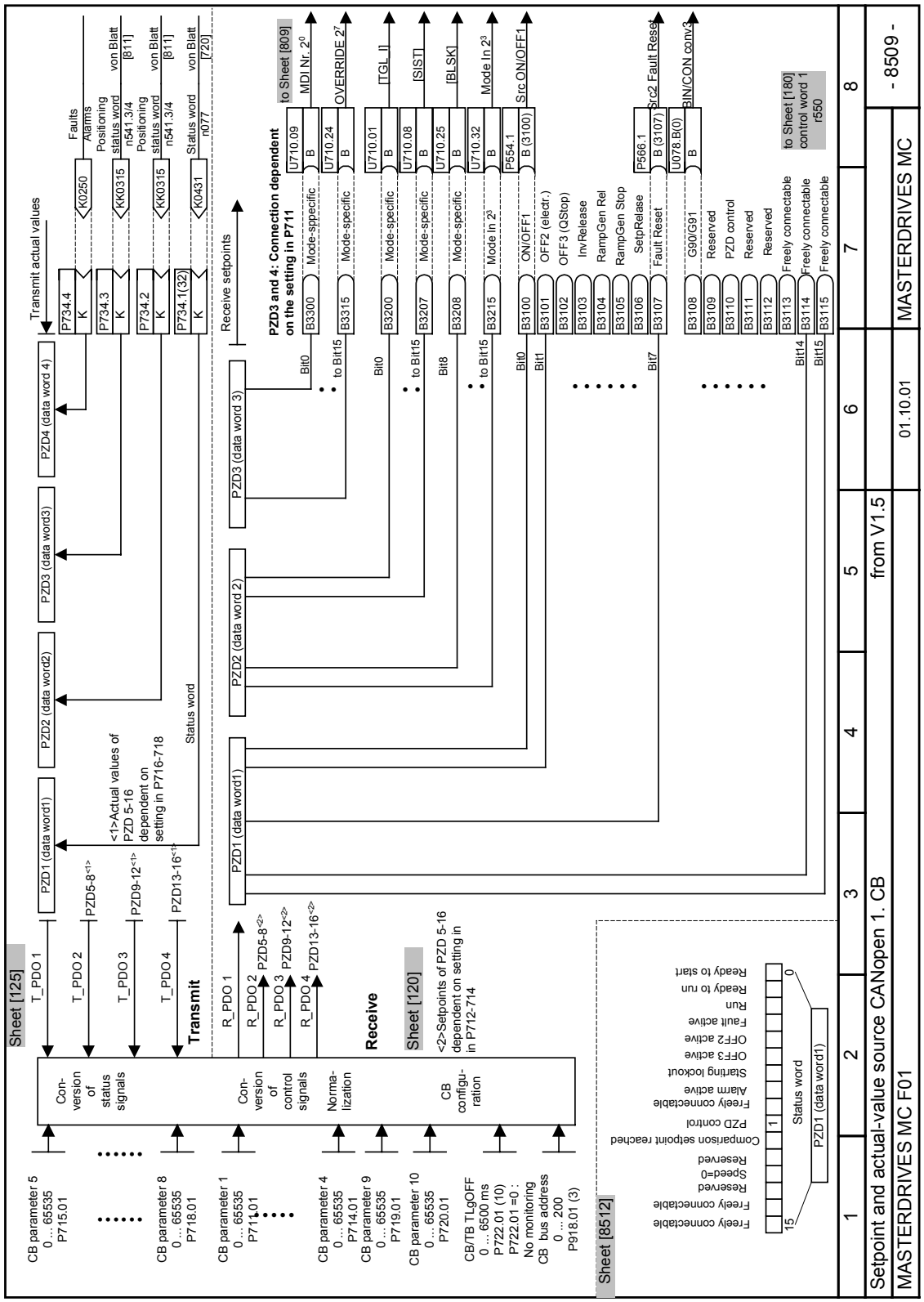

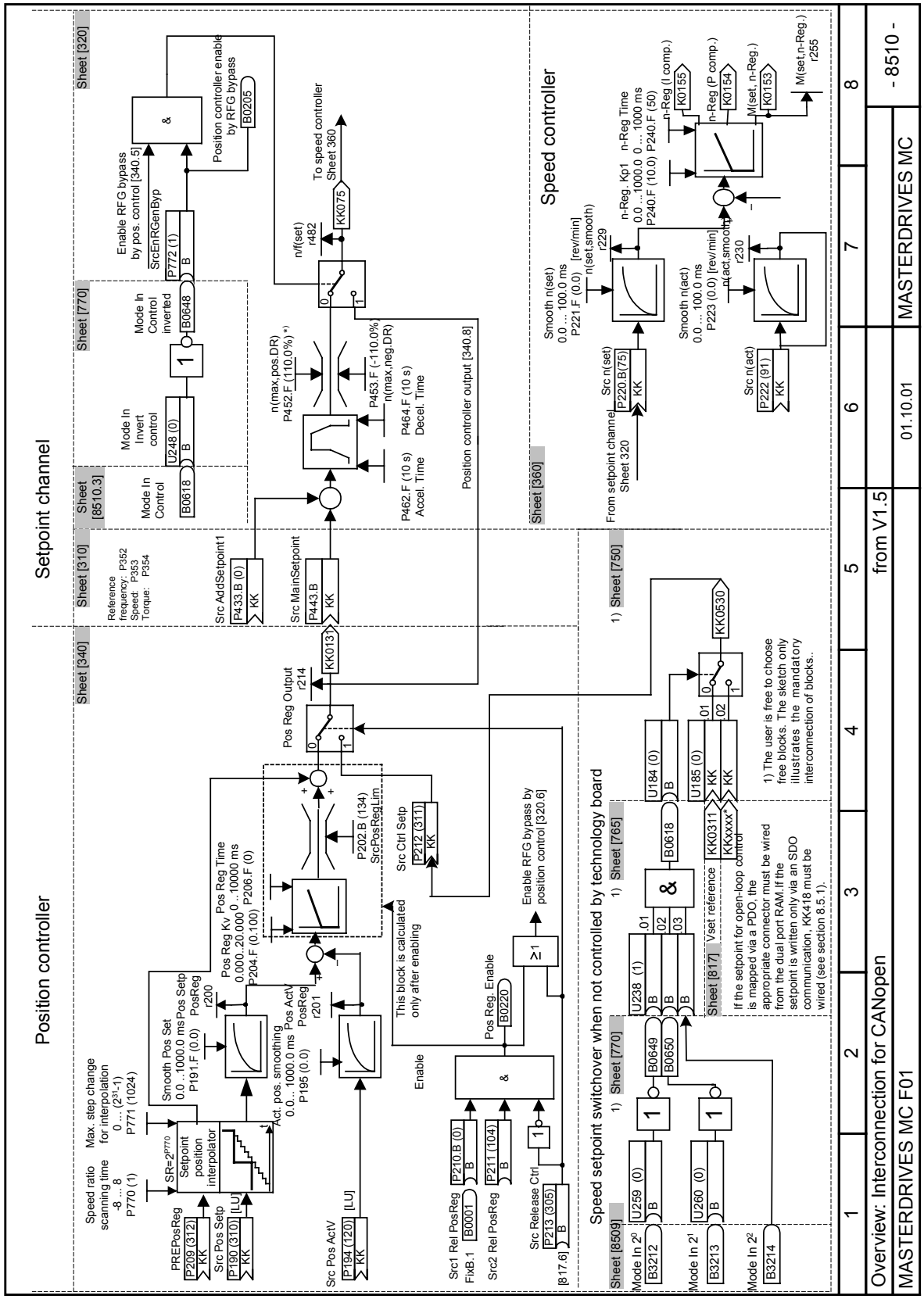
Setpoint channel
Position controller
Speed controller
Sheet [340]
Sheet [310]
Sheet [8510.3]
Sheet [770]
Sheet [320]
Sheet [360]
Sheet [750]
Sheet [765]
Sheet [817]
Sheet [8509]
Sheet [770]
Reference frequency: P352
Speed: P353
Torque: P354
Mode In Control
Mode In Invert control
Mode In Control inverted
Enable RFG bypass by pos. control [340.5]
Position controller enable by RFG bypass
To speed controller Sheet 360
Position controller output [340.8]
Src AddSetpoint1
Src MainSetpoint
Pos Reg Output
Pos Reg Kv
Pos Reg Time
Smooth Pos Set
Act. pos. smoothing
Setpoint position interpolator
Max. step change for interpolation
Speed ratio scanning time
Src Pos Setp
Src Pos ActV
PREPosReg
This block is calculated only after enabling
Enable
Src Ctrl Setp
Enable RFG bypass by position control [320.6]
Pos Reg. Enable
Src1 Rel PosReg
Src2 Rel PosReg
Src Release Ctrl
Speed setpoint switchover when not controlled by technology board
Mode In 2^0
Mode In 2^1
Mode In 2^2
Vset reference
If the setpoint for open-loop control is mapped via a PDO, the appropriate connector must be wired from the dual port RAM. If the setpoint is written only via an SDO communication, KK418 must be wired (see section 8.5.1).
1) The user is free to choose free blocks. The sketch only illustrates the mandatory interconnection of blocks..
Smooth n(set)
Smooth n(act)
From setpoint channel Sheet 320
Src n(set)
Src n(act)
n-Reg. Kp1
n-Reg Time
n-Reg (I comp.)
n-Reg (P comp.)
M(set, n-Reg.)
M(set,n-Reg.) r255
n/f(set) r482
Overview: Interconnection for CANopen
from V1.5
MASTERDRIVES MC F01
01.10.01
MASTERDRIVES MC
- 8510 -

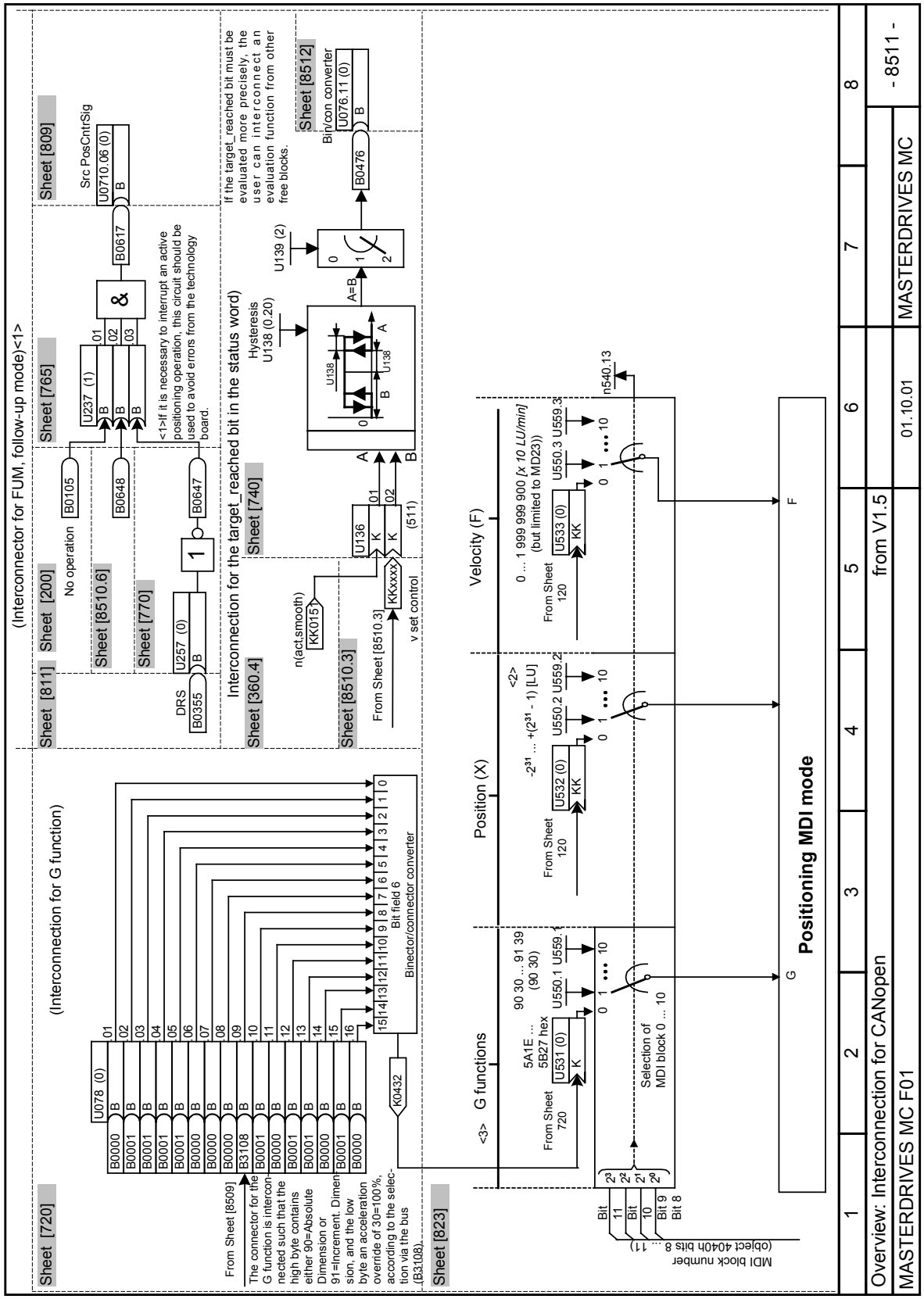
(Interconnector for FUM, follow-up mode)<1>
(Interconnection for G function)
Sheet [720]
Sheet [811]
Sheet [200]
Sheet [765]
Sheet [809]
Sheet [8510.6]
Sheet [770]
Sheet [360.4]
Sheet [740]
Sheet [8510.3]
Sheet [8512]
Sheet [823]
Interconnection for the target_reached bit in the status word)
Positioning MDI mode
Overview: Interconnection for CANopen
MASTERDRIVES MC F01
from V1.5
01.10.01
MASTERDRIVES MC
- 8511 -

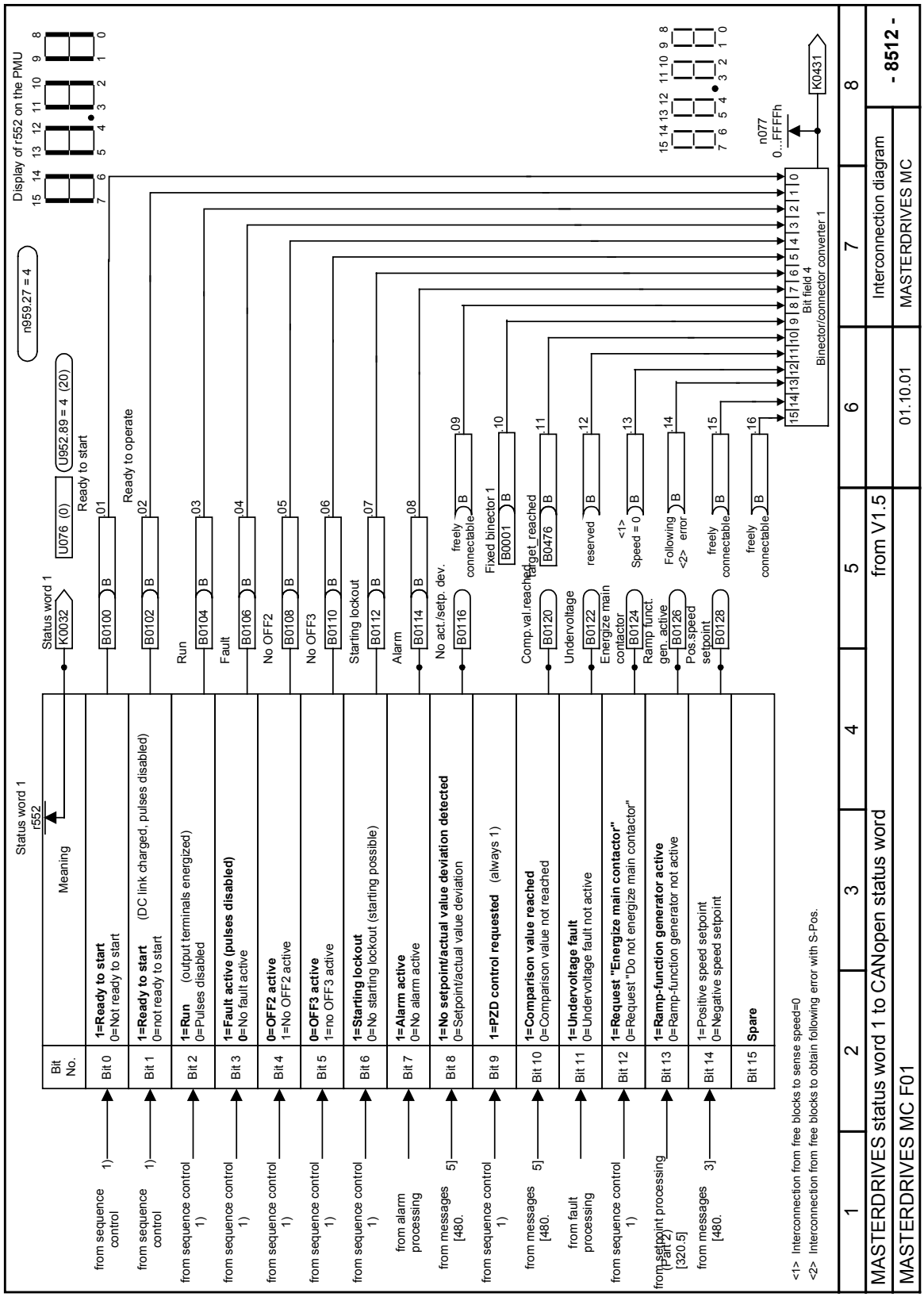
Status word 1 r552
Meaning
Bit No.
Bit 0 1=Ready to start 0=Not ready to start
Bit 1 1=Ready to start (DC link charged, pulses disabled) 0=not ready to start
Bit 2 1=Run (output terminals energized) 0=Pulses disabled
Bit 3 1=Fault active (pulses disabled) 0=No fault active
Bit 4 0=OFF2 active 1=No OFF2 active
Bit 5 0=OFF3 active 1=no OFF3 active
Bit 6 1=Starting lockout 0=No starting lockout (starting possible)
Bit 7 1=Alarm active 0=No alarm active
Bit 8 1=No setpoint/actual value deviation detected 0=Setpoint/actual value deviation
Bit 9 1=PZD control requested (always 1)
Bit 10 1=Comparison value reached 0=Comparison value not reached
Bit 11 1=Undervoltage fault 0=Undervoltage fault not active
Bit 12 1=Request "Energize main contactor" 0=Request "Do not energize main contactor"
Bit 13 1=Ramp-function generator active 0=Ramp-function generator not active
Bit 14 1=Positive speed setpoint 0=Negative speed setpoint
Bit 15 Spare
Status word 1
K0032
n959.27 = 4
U076 (0)
U952.89 = 4 (20)
Ready to start
Ready to operate
Run
Fault
No OFF2
No OFF3
Starting lockout
Alarm
No act./setp. dev.
Comp.val.reached
Undervoltage
Energize main contactor
Ramp funct. gen. active
Pos.speed setpoint
freely connectable
Fixed binector 1
B0001
target_reached
B0476
reserved
<1> Speed = 0
Following <2> error
Display of r552 on the PMU
n077 0...FFFFh
Bit field 4
Binector/connector converter 1
K0431
from sequence control 1)
from alarm processing
from messages [480.
from fault processing
from setpoint processing (Part 2) [320.5]
from messages [480. 3]
<1> Interconnection from free blocks to sense speed=0
<2> Interconnection from free blocks to obtain following error with S-Pos.
from V1.5
MASTERDRIVES status word 1 to CANopen status word
MASTERDRIVES MC F01
01.10.01
Interconnection diagram
MASTERDRIVES MC
- 8512 -

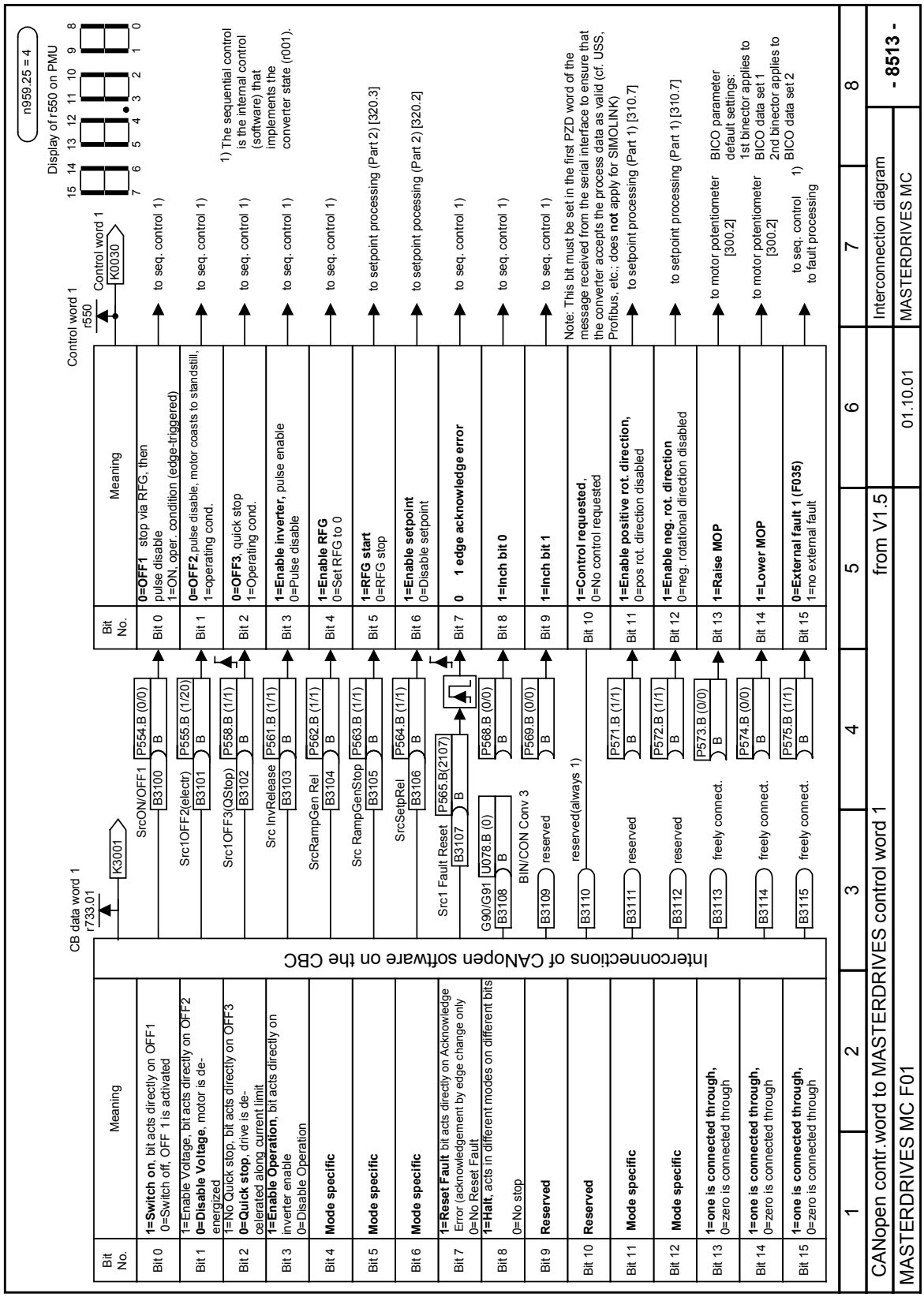
CANopen contr.word to MASTERDRIVES control word 1
MASTERDRIVES MC F01
from V1.5
01.10.01
Interconnection diagram
MASTERDRIVES MC
- 8513 -
Interconnections of CANopen software on the CBC
CB data word 1 r733.01
K3001
Control word 1 r550
K0030
n959.25 = 4
Display of r550 on PMU
Bit No.
Meaning
SrcON/OFF1
Src1OFF2(electr)
Src1OFF3(QStop)
Src InvRelease
SrcRampGen Rel
Src RampGenStop
SrcSetpRel
Src1 Fault Reset
G90/G91
BIN/CON Conv 3
reserved(always 1)
reserved
freely connect.
P554.B (0/0)
P555.B (1/20)
P558.B (1/1)
P561.B (1/1)
P562.B (1/1)
P563.B (1/1)
P564.B (1/1)
P565.B(2107)
P568.B (0/0)
P569.B (0/0)
P571.B (1/1)
P572.B (1/1)
P573.B (0/0)
P574.B (0/0)
P575.B (1/1)
U078.B (0)
B3100
B3101
B3102
B3103
B3104
B3105
B3106
B3107
B3108
B3109
B3110
B3111
B3112
B3113
B3114
B3115
0=OFF1 stop via RFG, then pulse disable
1=ON, oper. condition (edge-triggered)
0=OFF2,pulse disable, motor coasts to standstill.
1=operating cond.
0=OFF3, quick stop
1=Operating cond.
1=Enable inverter, pulse enable
0=Pulse disable
1=Enable RFG
0=Set RFG to 0
1=RFG start
0=RFG stop
1=Enable setpoint
0=Disable setpoint
0 1 edge acknowledge error
1=Inch bit 0
1=Inch bit 1
1=Control requested,
0=No control requested
1=Enable positive rot. direction,
0=pos rot. direction disabled
1=Enable neg. rot. direction
0=neg. rotational direction disabled
1=Raise MOP
1=Lower MOP
0=External fault 1 (F035)
1=no external fault
to seq. control 1)
to setpoint processing (Part 2) [320.3]
to setpoint processing (Part 2) [320.2]
to setpoint processing (Part 1) [310.7]
to motor potentiometer [300.2]
to seq. control 1)
to fault processing
1) The sequential control is the internal control (software) that implements the converter state (r001).
Note: This bit must be set in the first PZD word of the message received from the serial interface to ensure that the converter accepts the process data as valid (cf. USS, Profibus, etc.; does not apply for SIMOLINK)
BICO parameter default settings:
1st binector applies to BICO data set 1
2nd binector applies to BICO data set 2
1=one is connected through, 0=zero is connected through
1=Switch on, bit acts directly on OFF1 0=Switch off, OFF 1 is activated
1=Enable Voltage, bit acts directly on OFF2 0=Disable Voltage, motor is de-energized
1=No Quick stop, bit acts directly on OFF3 0=Quick stop, drive is de-celerated along current limit
1=Enable Operation, bit acts directly on inverter enable 0=Disable Operation
Mode specific
1=Reset Fault bit acts directly on Acknowledge Error (acknowledgement by edge change only 0=No Reset Fault
1=Halt, acts in different modes on different bits 0=No stop
Reserved

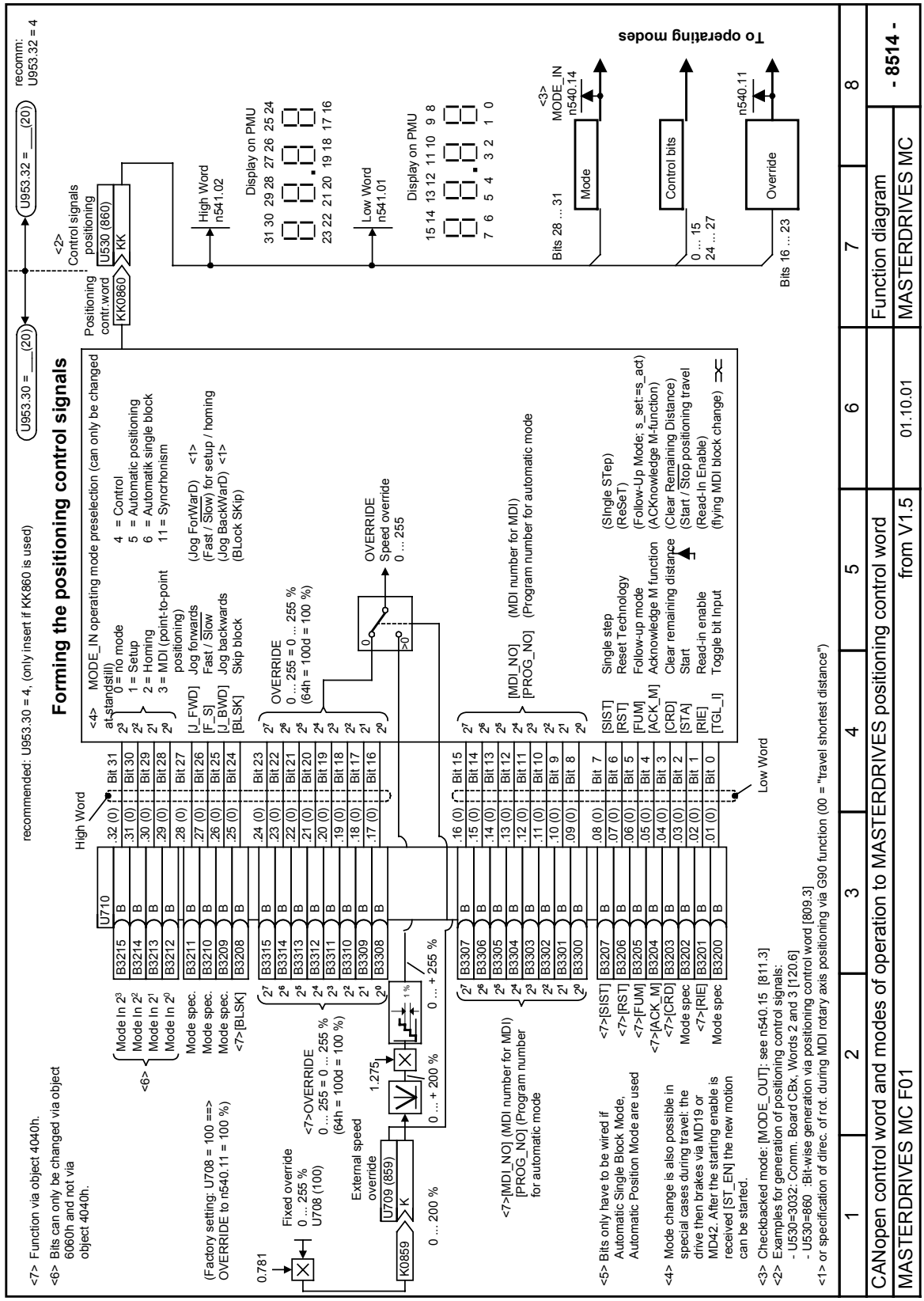
Forming the positioning control signals
recommended: U953.30 = 4, (only insert if KK860 is used)
U953.30 = ___(20)
U953.32 = ___(20)
recomm: U953.32 = 4
<7> Function via object 4040h.
<6> Bits can only be changed via object 6060h and not via object 4040h.
<4> MODE_IN operating mode preselection (can only be changed at standstill)
0 = no mode
1 = Setup
2 = Homing
3 = MDI (point-to-point positioning)
4 = Control
5 = Automatic positioning
6 = Automatik single block
11 = Synchronism
[J_FWD] Jog forwards
[F_S] Fast / Slow
[J_BWD] Jog backwards
[BLSK] Skip block
(Jog ForWarD) <1>
(Fast / Slow) for setup / homing
(Jog BackWarD) <1>
(BLock SKip)
<2> Control signals positioning
U530 (860)
KK
Positioning contr.word
KK0860
High Word
n541.02
Low Word
n541.01
Display on PMU
31 30 29 28 27 26 25 24
23 22 21 20 19 18 17 16
15 14 13 12 11 10 9 8
7 6 5 4 3 2 1 0
To operating modes
<3> MODE_IN n540.14
Bits 28 ... 31
Mode
Control bits
0 ... 15
24 ... 27
n540.11
Override
Bits 16 ... 23
High Word
Low Word
U710
Bit 31 Bit 30 Bit 29 Bit 28 Bit 27 Bit 26 Bit 25 Bit 24 Bit 23 Bit 22 Bit 21 Bit 20 Bit 19 Bit 18 Bit 17 Bit 16
Bit 15 Bit 14 Bit 13 Bit 12 Bit 11 Bit 10 Bit 9 Bit 8 Bit 7 Bit 6 Bit 5 Bit 4 Bit 3 Bit 2 Bit 1 Bit 0
B3215 B3214 B3213 B3212 B3211 B3210 B3209 B3208 B3315 B3314 B3313 B3312 B3311 B3310 B3309 B3308
B3307 B3306 B3305 B3304 B3303 B3302 B3301 B3300 B3207 B3206 B3205 B3204 B3203 B3202 B3201 B3200
Mode In 2³ Mode In 2² Mode In 2¹ Mode In 2⁰
<6>
Mode spec. Mode spec. Mode spec. <7>[BLSK]
(Factory setting: U708 = 100 ==> OVERRIDE to n540.11 = 100 %)
OVERRIDE 0 ... 255 = 0 ... 255 % (64h = 100d = 100 %)
[MDI_NO] [PROG_NO]
(MDI number for MDI) (Program number for automatic mode
OVERRIDE Speed override 0 ... 255
0.781
Fixed override 0 ... 255 % U708 (100)
<7>OVERRIDE 0 ... 255 = 0 ... 255 % (64h = 100d = 100 %)
External speed override
U709 (859)
K
K0859
1.275
0 ... + 200 %
0 ... + 255 %
0 ... 200 %
<7>[MDI_NO] (MDI number for MDI) [PROG_NO] (Program number for automatic mode
[SIST] [RST] [FUM] [ACK_M] [CRD] [STA] [RIE] [TGL_I]
Single step Reset Technology Follow-up mode Acknowledge M function Clear remaining distance Start Read-in enable Toggle bit Input
(SIngle STep) (ReSeT) (Follow-Up Mode: s_set:=s_act) (ACKnowledge M-function) (Clear Remaining Distance) (Start / Stop positioning travel (Read-In Enable) (flying MDI block change)
<5> Bits only have to be wired if Automatic Single Block Mode, Automatic Position Mode are used
<7>[SIST]
<7>[RST]
<7>[FUM]
<7>[ACK_M]
<4> Mode change is also possible in special cases during travel: the drive then brakes via MD19 or MD42. After the starting enable is received [ST_EN] the new motion can be started.
<7>[CRD]
Mode spec
<7>[RIE]
Mode spec
<3> Checkbacked mode: [MODE_OUT]: see n540.15 [811.3]
<2> Examples for generation of positioning control signals:
- U530=3032: Comm. Board CBx, Words 2 and 3 [120.6]
- U530=860 :Bit-wise generation via positioning control word [809.3]
<1> or specification of direc. of rot. during MDI rotary axis positioning via G90 function (00 = "travel shortest distance")
1 2 3 4 5 6 7 8
CANopen control word and modes of operation to MASTERDRIVES positioning control word
Function diagram
- 8514 -
MASTERDRIVES MC F01
from V1.5
01.10.01
MASTERDRIVES MC

Parameter file for the control of positioning/synchronous operation via CBC field bus interface CANopen

The basic communication connections for data transfer via CANopen are made with these parameter settings. Some parameters (in shaded boxes) will need to be adapted to your application. Open the script file on your SIMOVIS DriveMonitor CD using a text editor and enter the settings appropriate to your appication. Then save the file and load it to the device using SIMOVIS DriveMonitor. You will then need to set the motor and controller parameters.

The script file is stored under the following name on your SIMOVIS DriveMonitor CD ROM:

SIMOVIS DriveMonitor for WINDOWS 95 and later:

- **MCF01.SSC**
  (load this scriptfile, applies equally to Compact PLUS, Compact and chassis units)

CB parameters :

Receive PDOs

P711.01=65281 ;RPDO 1 (RPDO 1,asynchronous)
P712.01=0 ;RPDO 2
P713.01=0 ;RPDO 3
P714.01=0 ;RPDO 4

Transmit PDOs

P715.01=65281 ;TPDO 1 (RPDO 1,asynchronous)
P716.01=0 ;TPDO 2
P717.01=0 ;TPDO 3
P718.01=0 ;TPDO 4

CBC parameterization

P719.01=4546 ;Device, device response to lifeguarding
P720.01=4 ;CAN bus baud rate (125 kB)
P721.01=1 ;CAN profile selection (CANopen)
P722.01=0 ;Message failure time
P918.01=5 ;CB bus address
P053.00=7 ;Parameterization enable

Transmit data
Transmit PDO 1
P734.01=0431 ;Status word via BIN/CON converter
P734.02=0315 ;Positioning status word, high
P734.03=0315 ;Positoning status word, low
P734.04=0250 ;Faults/alarms

Transmit PDO 2

P734.05=0 ;TPDO 2 word 1
P734.06=0 ;TPDO 2 word 2
P734.07=0 ;TPDO 2 word 3
P734.08=0 ;TPDO 2 word 4

Transmit PDO 3

P734.09=0 ;TPDO 3 word 1
P734.10=0 ;TPDO 3 word 2
P734.11=0 ;TPDO 3 word 3
P734.12=0 ;TPDO 3 word 4

Transmit PDO 4

P734.13=0 ;TPDO 4 word 1
P734.14=0 ;TPDO 4 word 2
P734.15=0 ;TPDO 4 word 3
P734.16=0 ;TPDO 4 word 4

Control word 1

P554.01=3100 ;Src ON/OFF1 BICO DS1
P555.01=3101 ;Src1.OFF2(electr.) BICO DS1
P558.01=3102 ;Src1 OFF3(QStop) BICO DS1
P561.01=3103 ;Src InvRelease
P562.01=3104 ;Src RampGenRel
P563.01=3105 ;Src RampGen Stop
P564.01=3106 ;Src Setp Release
P565.01=3107 ;Src Fault Reset

Status word 1 at bin/con converter 1

U076.01=100 ;Ready to start at BIN/CON converter
U076.02=102 ;Ready to operate BIN/CON converter
U076.03=104 ;Run at BIN/CON converter
U076.04=106 ;Fault active at BIN/CON converter
U076.05=108 ;OFF2 active at BIN/CON converter
U076.06=110 ;OFF3 active at BIN/CON converter
U076.07=112 ;Starting lockout at BIN/CON converter
U076.08=114 ;Alarm active at BIN/CON converter
U076.09=0 ;Freely connectable by user
U076.10=1 ;PZD control must always be 1
U076.11=476 ;target_reached at BIN/CON converter
U076.12=0 ;reserved
U076.13=0 ;reserved
U076.14=0 ;reserved
U076.15=0 ;Freely connectable by user
U076.16=0 ;Freely connectable by user
U952.89=4 ;Time slot

Setpoint processing {FD -320-}

P443.01=131 ;Src MainSetpoint BICO DS1 (from position controller)
P772.00=648 ;Src EnRGenByp

Positioon sensing motor encoder {FD -330-}

P172.00=302 ;Src Pos SetV
P174.00=301 ;Src Pos Corr'n
P175.02=304
P178.00=16 ;Src Rough pulse BIN input 4

Closed-loop position control {FD -340-}

P210.01=1 ;Src1 RelPosReg
P212.01=530 ;Src Ctrl Setp

Technology option F1

U531.00=432 ;Src GFunc MDI
U532.00=415 ;Src Position MDI (KK30xx)
U533.00=416 ;Src Speed MDI (KK30xx)
U535.00=120 ;Src PosAct V
U530.00=860 ;Src Ctr Signals

Formation of positioning signals

U710.01=3200 ;TGL_I (Toggle-Bit Input)
U710.02=3201 ;RIE (Delete distance to go)
U710.03=3202 ;STA (Start)
U710.04=3203 ;CRD(Delete distance to go)
U710.05=3204 ;ACK_M (Acknowledgement M function)
U710.06=617 ;FUM (Follow-up mode)
U710.07=3206 ;RST (Reset)
U710.08=3207 ;SIST (Single step)
U710.09=0 ;MDI_NO/PROG_NO 2^0
U710.10=0 ;MDI_NO/PROG_NO 2^1
U710.11=0 ;MDI_NO/PROG_NO 2^2
U710.12=0 ;MDI_NO/PROG_NO 2^3
U710.13=0 ;MDI_NO/PROG_NO 2^4
U710.14=0 ;MDI_NO/PROG_NO 2^5
U710.15=0 ;MDI_NO/PROG_NO 2^6
U710.16=0 ;MDI_NO/PROG_NO 2^7
U710.17=0 ;OVERRRIDE 2^0
U710.18=0 ;OVERRRIDE 2^1
U710.19=0 ;OVERRRIDE 2^2
U710.20=0 ;OVERRRIDE 2^3
U710.21=0 ;OVERRRIDE 2^4
U710.22=0 ;OVERRRIDE 2^5
U710.23=0 ;OVERRRIDE 2^6
U710.24=0 ;OVERRRIDE 2^7
U710.25=3208 ;BLSK (Skip block)
U710.26=3209 ;J_BWD (Jog backwards)
U710.27=3210 ;F_S (Quick/slow)
U710.28=3211 ;J_FWD (Jog forwards)
U710.29=3212 ;MODE_IN 2^0
U710.30=3213 ;MODE_IN 2^1
U710.31=3214 ;MODE_IN 2^2
U710.32=3215 ;MODE_IN 2^3

Time slots
U953.30=4 ;Control signals positioning
U953.32=4 ;Positioning

1	2	3	4	5	6	7	8
Parameter file "positioning with F01 via CANopen"				from V1.5		Function diagram	- 8515 -
MASTERDRIVES MC F01					01.10.01	MASTERDRIVES MC	

Parameter file for the control of positioning/synchronous operation via CBC field bus interface CANopen

The basic communication connections for data transfer via CANopen are made with these parameter settings. Some parameters (in shaded boxes) will need to be adapted to your application. Open the script file on your SIMOVIS DriveMonitor CD using a text editor and enter the settings appropriate to your application. Then save the file and load it to the device using SIMOVIS DriveMonitor. You will then need to set the motor and controller parameters.

The script file is stored under the following name on your SIMOVIS Drivemonitor CD ROM::

SIMOVIS DriveMonitor for WINDOWS 95 and later:

- **MCF01.SSC**
  (load this script file, applies equally to Compact PLUS, Compact and chassis units)

Free block interconnections

Speed setpoint switchover for homing and control
Mode-dependent speed setpoint switchover
This circuit implements switchover of the speed setpoint in P212 depending on whether control or homing is selected. If this circuit is omitted, the speed setpoint is always supplied by the technology.
Object 60ffh target_velocity has no effect in this case.

Analog signal selector switch 5 (2-word) [KK0530] Control setpoint
U184.00=618 ;Switchover of "Mode in control"FP[8510.3]
U185.01=311 ;v-set from technology
U185.02=418 ;v-set fixed setpoint U018 with SDO or DPR
U952.08=4 ;Time slot

AND element 18 [B0618]
U238.01=649 ;Input 1 (Mode in 2^0 inverted)
U238.02=650 ;Input 2 (Mode in 2^1 inverted)
U238:03=3214 ;Input 3 (Mode In 2^2)
U952.92=4 ;Time slot

Inverter 9 [B0649] Invert Mode In 2^0
U259.00=3212 ;Input 2^0
U952.53=4 ;Time slot

Inverter 10 [B0650] Invert Mode In 2^1
U260.00=3213 ;Input 2^1
U952.55=4 ;Time slot

Interconnection for the target_reached bit in status word
This circuit implements the target_reached bit in the status word with a single-word limit-value monitor.

Limit-value monitor with smoothing (1 word)
U136.01=151 n(act,smooth)
U136.02=418 v-set via SDO (U018) or via DPR (KK30xx)
U138.00=0.20 Hysteresis
U139.00=2 Function A=B
U951.18=4 Time slot

Switchover absolute/relative positoining
This circuit implements the switchover between the G functions G90 (absolute positoning) and G91 (relative positioning) in technology mode MDI if the axis is traversing with MDI block 0 (fast MDI). **Binector/connector converter [K0432] (G functions for MDI via CAN)**

Acceleration override = G30
U078.01=0 ;2^0
U078.02=1 ;2^1
U078.03=1 ;2^2
U078.04=1 ;2^3
U078.05=1 ;2^4
U078.06=0 ;2^5
U078.07=0 ;2^6
U078.08=0 ;2^7
G90 / G91 switchover
U078.09=3108 ;2^0
U078.10=1 ;2^1
U078.11=0 ;2^2
U078.12=1 ;2^3
U078.13=1 ;2^4
U078.14=0 ;2^5
U078.15=1 ;2^6
U078.16=0 ;2^7
U952.90=10 ;Time slot

Follow-up mode - FUM -{FD[8511]}
The output of this circuit switches the technology to follow-up mode if positioning is aborted.

AND element 17 [B0617] (Follow-up mode ON after abort)
U237.01=105 ;Input 1 (no operation)
U237.02=647 ;Input 2 (DRS inverted)
U237.03=648 ;Input 3 (not in control mode !)
U952.54=6 ;Time slot

Inverter 7 [B0647] Invert position reached (DRS)
U257.00=355 ;Input (DRS)
U951.94=6 ;Time slot

Inverter 8 [B0648] Invert control mode BA
U258.00=618 ;Input (control)
U952.41=6 ;Time slot

1	2	3	4	5	6	7	8
Parameter file "Positioning with F01 via CANopen"				from V1.5		Function diagram	- 8516 -
MASTERDRIVES MC F01					01.10.01	MASTERDRIVES MC	

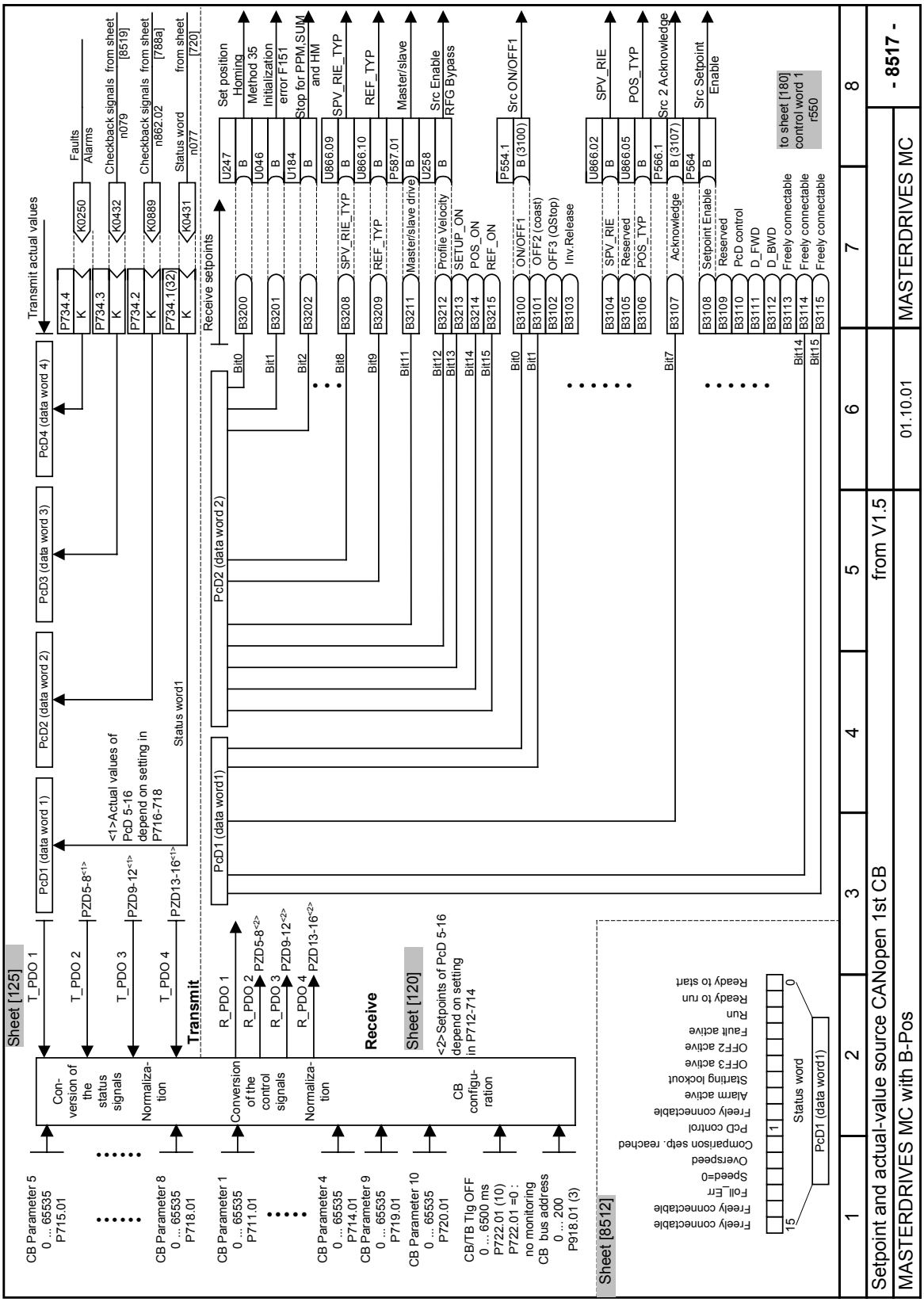
Sheet [125]
T_PDO 1
T_PDO 2
T_PDO 3
T_PDO 4
Transmit
Con-version of the status signals
Normaliza-tion
PcD1 (data word 1)
PcD2 (data word 2)
PcD3 (data word 3)
PcD4 (data word 4)
PZD5-8<1>
PZD9-12<1>
PZD13-16<1>
<1>Actual values of PcD 5-16 depend on setting in P716-718
Status word1
Transmit actual values
P734.4
P734.3
P734.2
P734.1(32)
K0250
K0432
K0889
K0431
Faults
Alarms
Checkback signals from sheet [8519] n079
Checkback signals from sheet [788a] n862.02
Status word from sheet [720] n077
Receive setpoints
PcD1 (data word1)
PcD2 (data word 2)
Bit0
Bit1
Bit2
Bit8
Bit9
Bit11
Bit12
Bit13
Bit14
Bit15
B3200
B3201
B3202
B3208
B3209
B3211
B3212
B3213
B3214
B3215
U247
U046
U184
U866.09
U866.10
P587.01
U258
P554.1
Set position Homing
Method 35 Initialization error F151
Stop for PPM,SUM and HM
SPV_RIE_TYP
REF_TYP
Master/slave
Src Enable RFG Bypass
Profile Velocity
SETUP_ON
POS_ON
REF_ON
Src ON/OFF1
B (3100)
ON/OFF1
OFF2 (coast)
OFF3 (QStop)
Inv.Release
B3100
B3101
B3102
B3103
Bit0
Bit1
Bit7
U866.02
U866.05
P566.1
P564
SPV_RIE
POS_TYP
Src 2 Acknowledge
Src Setpoint Enable
B (3107)
SPV_RIE
Reserved
POS_TYP
Acknowledge
Setpoint Enable
Reserved
PcD control
D_FWD
D_BWD
Freely connectable
B3104
B3105
B3106
B3107
B3108
B3109
B3110
B3111
B3112
B3113
B3114
B3115
to sheet [180] control word 1 r550
Sheet [120]
R_PDO 1
R_PDO 2
R_PDO 3
R_PDO 4
Receive
PZD5-8<2>
PZD9-12<2>
PZD13-16<2>
<2> Setpoints of PcD 5-16 depend on setting in P712-714
Conversion of the control signals
Normaliza-tion
CB configu-ration
CB Parameter 5 0 ... 65535 P715.01
CB Parameter 8 0 ... 65535 P718.01
CB Parameter 1 0 ... 65535 P711.01
CB Parameter 4 0 ... 65535 P714.01
CB Parameter 9 0 ... 65535 P719.01
CB Parameter 10 0 ... 65535 P720.01
CB/TB Tlg OFF 0 ... 6500 ms P722.01 (10) P722.01 =0 : no monitoring
CB bus address 0 ... 200 P918.01 (3)
Sheet [8512]
15
Status word
0
PcD1 (data word1)
Freely connectable
Foll_Err
Speed=0
Overspeed
Comparison setp. reached
PcD control
Freely connectable
Alarm active
Starting lockout
OFF3 active
OFF2 active
Fault active
Run
Ready to run
Ready to start
1
2
3
4
5
6
7
8
Setpoint and actual-value source CANopen 1st CB
from V1.5
MASTERDRIVES MC with B-Pos
01.10.01
MASTERDRIVES MC
- 8517 -

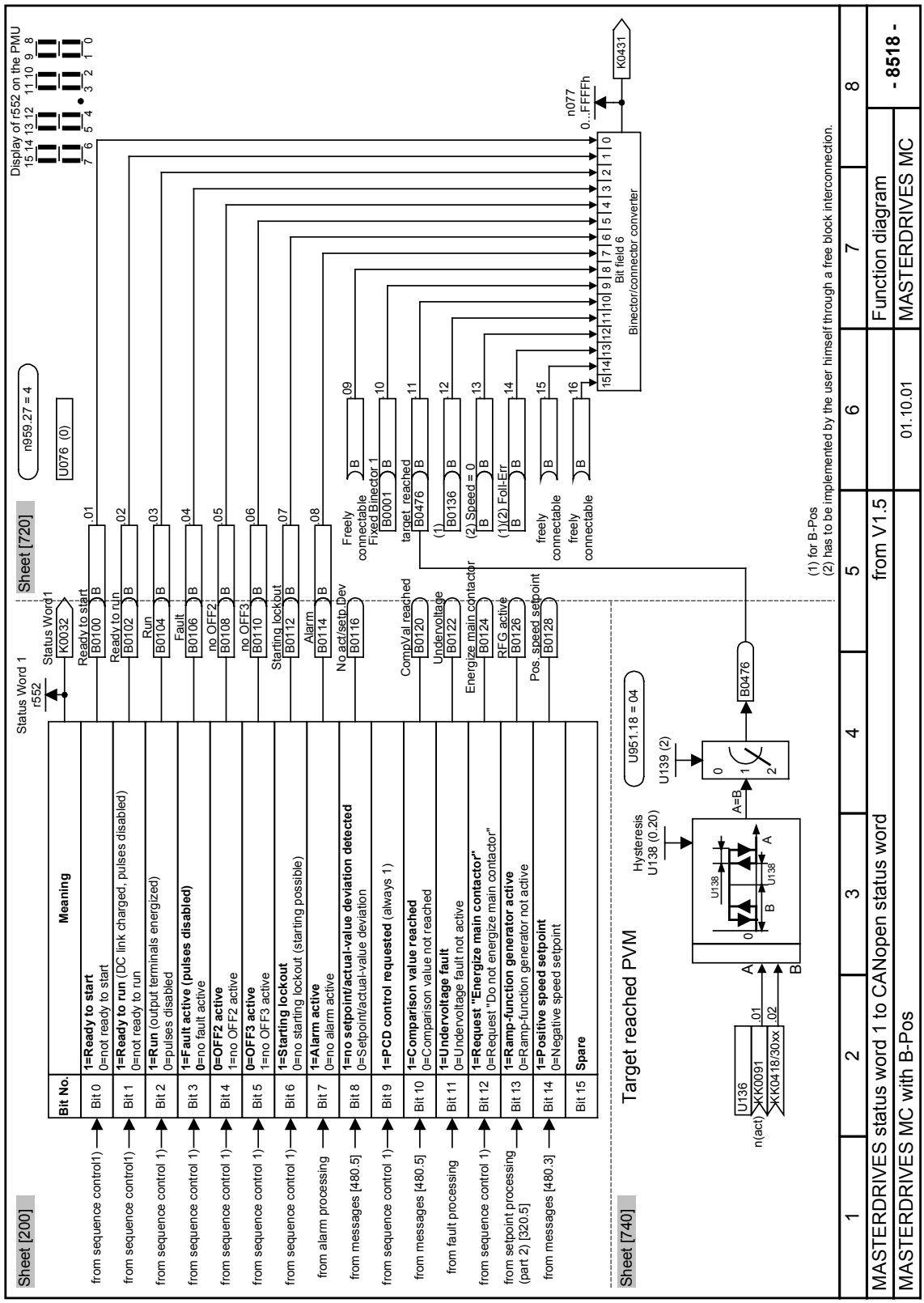
Sheet [200]
Sheet [720]
Sheet [740]
Status Word 1
r552
K0032
Status Word 1
n959.27 = 4
U076 (0)
Display of r552 on the PMU
Bit No.
Meaning
Bit 0
1=Ready to start
0=not ready to start
Bit 1
1=Ready to run (DC link charged, pulses disabled)
0=not ready to run
Bit 2
1=Run (output terminals energized)
0=pulses disabled
Bit 3
1=Fault active (pulses disabled)
0=no fault active
Bit 4
0=OFF2 active
1=no OFF2 active
Bit 5
0=OFF3 active
1=no OFF3 active
Bit 6
1=Starting lockout
0=no starting lockout (starting possible)
Bit 7
1=Alarm active
0=no alarm active
Bit 8
1=no setpoint/actual-value deviation detected
0=Setpoint/actual-value deviation
Bit 9
1=PCD control requested (always 1)
Bit 10
1=Comparison value reached
0=Comparison value not reached
Bit 11
1=Undervoltage fault
0=Undervoltage fault not active
Bit 12
1=Request "Energize main contactor"
0=Request "Do not energize main contactor"
Bit 13
1=Ramp-function generator active
0=Ramp-function generator not active
Bit 14
1=Positive speed setpoint
0=Negative speed setpoint
Bit 15
Spare
Ready to start
Ready to run
Run
Fault
no OFF2
no OFF3
Starting lockout
Alarm
No act/setp Dev
ComVal reached
Undervoltage
Energize main contactor
RFG active
Pos. speed setpoint
B0100
B0102
B0104
B0106
B0108
B0110
B0112
B0114
B0116
B0120
B0122
B0124
B0126
B0128
from sequence control 1)
from alarm processing
from messages [480.5]
from fault processing
from setpoint processing (part 2) [320.5]
from messages [480.3]
Freely connectable
Fixed Binector 1
target reached
B0476
B0001
B0136
(2) Speed = 0
(1)(2) Foll-Err
freely connectable
Bit field 6
Binector/connector converter
n077
0...FFFFh
K0431
(1) for B-Pos
(2) has to be implemented by the user himself through a free block interconnection.
Target reached PVM
U951.18 = 04
Hysteresis
U138 (0.20)
U139 (2)
U136
n(act)
KK0091
KK0418/30xx
A=B
from V1.5
01.10.01
Function diagram
MASTERDRIVES MC
MASTERDRIVES status word 1 to CANopen status word
MASTERDRIVES MC with B-Pos
- 8518 -

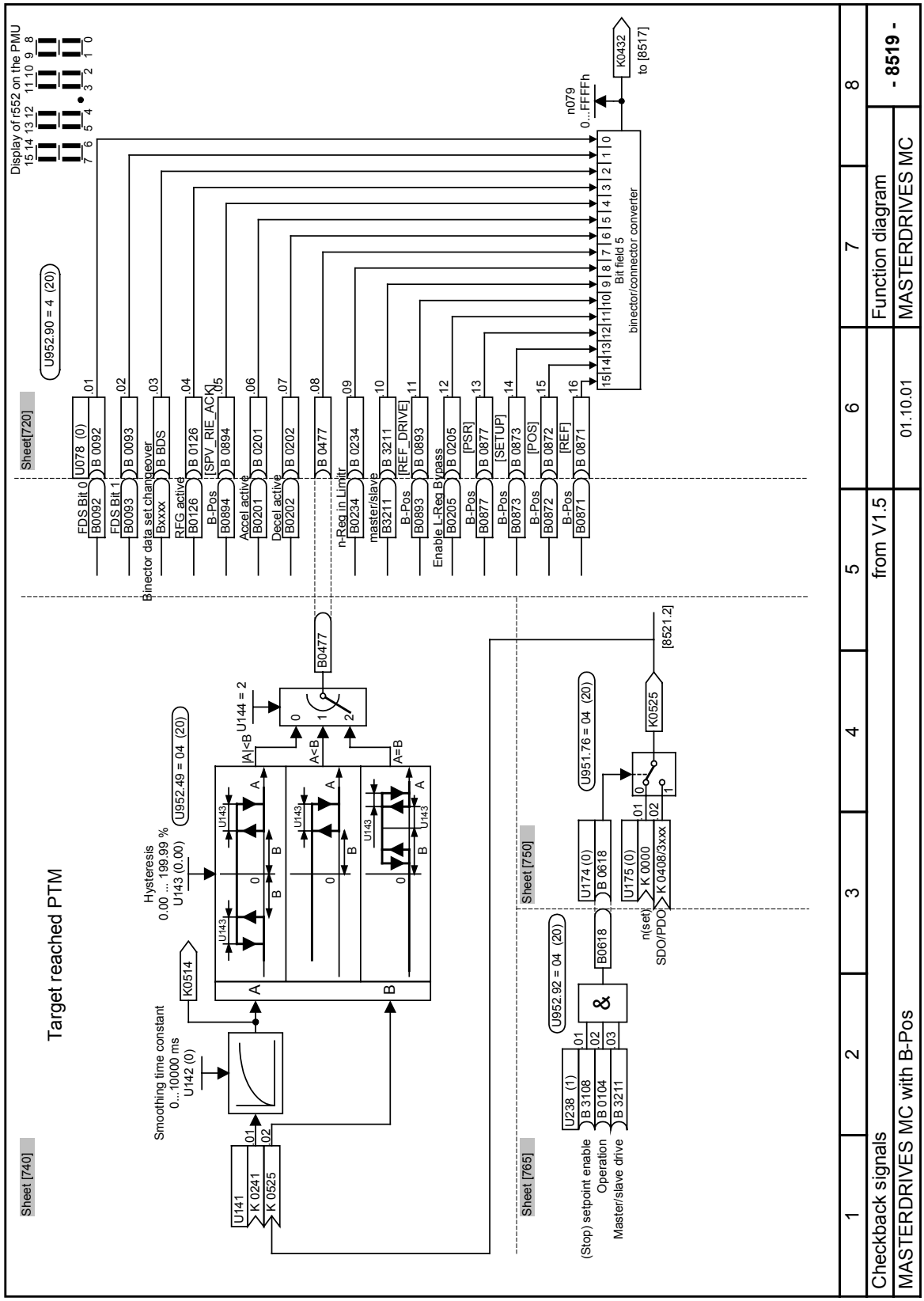
Target reached PTM
Sheet [740]
Sheet [750]
Sheet [765]
Sheet[720]
Smoothing time constant
0...10000 ms
U142 (0)
Hysteresis
0.00 ... 199.99 %
U143 (0.00)
U952.49 = 04 (20)
U144 = 2
K0514
U141
K 0241
K 0525
U952.92 = 04 (20)
U238 (1)
B 3108
B 0104
B 3211
(Stop) setpoint enable
Operation
Master/slave drive
B0618
U174 (0)
B 0618
U175 (0)
K 0000
K 0408/3xxx
n(set)
SDO/PDO
U951.76 = 04 (20)
K0525
[8521.2]
B0477
U952.90 = 4 (20)
Display of r552 on the PMU
FDS Bit 0
FDS Bit 1
Binector data set changeover
RFG active
B-Pos [SPV_RIE_ACK]
Accel active
Decel active
n-Reg.in Limitr
master/slave
B-Pos [REF_DRIVE]
Enable L-Reg Bypass
B-Pos [PSR]
B-Pos [SETUP]
B-Pos [POS]
B-Pos [REF]
n079
0...FFFFh
Bit field 5
binector/connector converter
K0432
to [8517]
Checkback signals
MASTERDRIVES MC with B-Pos
from V1.5
01.10.01
Function diagram
MASTERDRIVES MC
- 8519 -

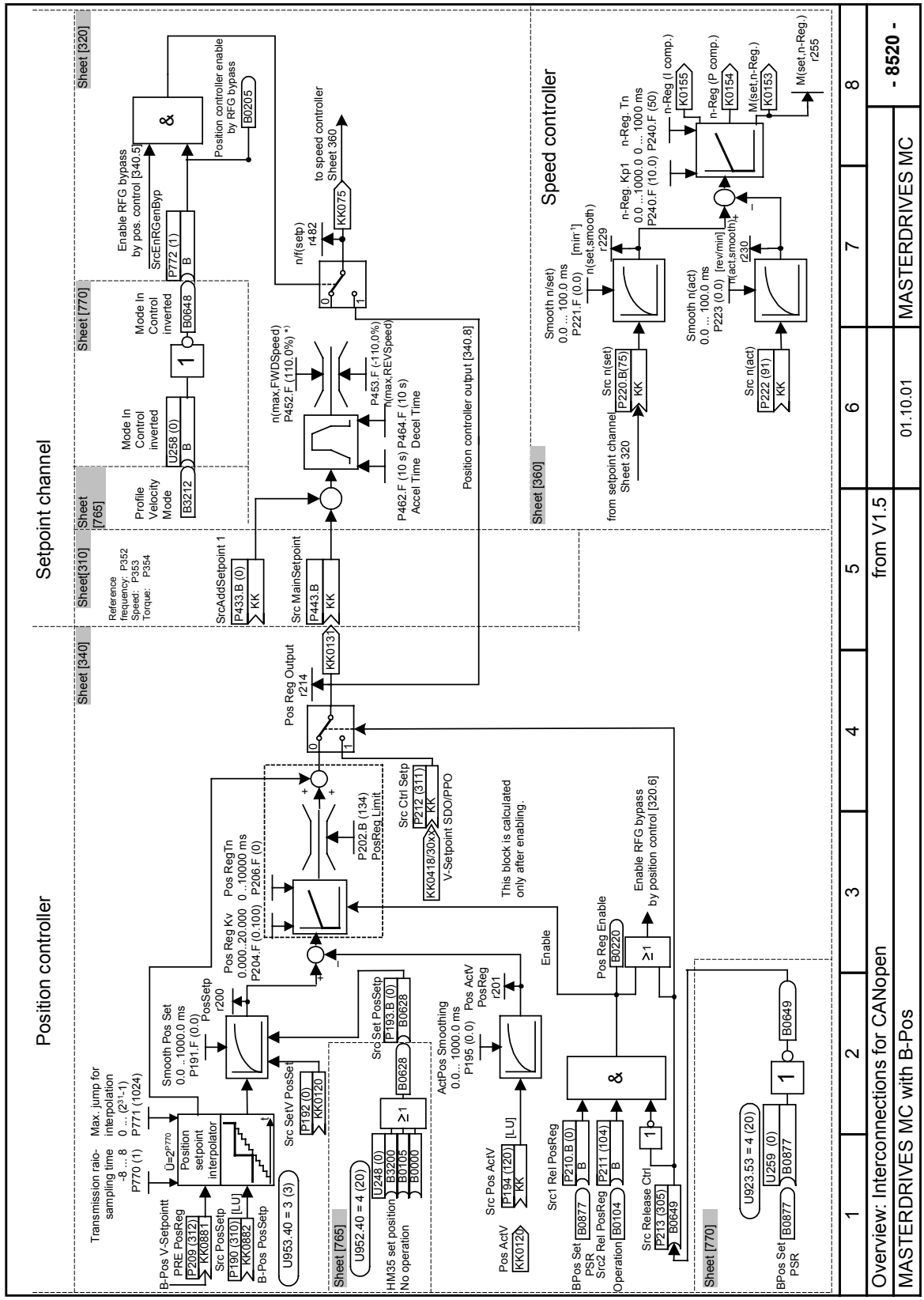
Setpoint channel
Position controller
Speed controller
Sheet [320]
Sheet [770]
Sheet [765]
Sheet[310]
Sheet [340]
Sheet [360]
Sheet [765]
Sheet [770]
Enable RFG bypass by pos. control [340.5]
SrcEnRGenByp
P772 (1)
B
Position controller enable by RFG bypass
B0205
Mode In Control inverted
B0648
U258 (0)
B3212
Profile Velocity Mode
n/f(setp) r482
to speed controller Sheet 360
KK075
n(max,FWDSpeed) P452.F (110.0%) *)
P453.F (-110.0%) n(max,REVSpeed)
P462.F (10 s) Accel Time
P464.F (10 s) Decel Time
Position controller output [340.8]
Reference frequency: P352
Speed: P353
Torque: P354
SrcAddSetpoint 1
P433.B (0)
KK
Src MainSetpoint
P443.B
KK013
Pos Reg Output r214
Smooth n(set) 0.0 ...100.0 ms P221.F (0.0)
n(set,smooth) r229 [min-1]
n-Reg. Kp1 0.0 ...1000.0
n-Reg. Tn 0.0 ...1000 ms P240.F (10.0) P240.F (50)
n-Reg (I comp.) K0155
n-Reg (P comp.) K0154
M(set,n-Reg.) K0153
M(set,n-Reg.) r255
Src n(set) P220.B(75) KK
from setpoint channel Sheet 320
Smooth n(act) 0.0 ...100.0 ms P223 (0.0)
n(act,smooth) r230 [rev/min]
Src n(act) P222 (91) KK
Transmission raio- sampling time -8 ... 8 P770 (1)
Max. jump for interpolation 0 ... (2^21-1) P771 (1024)
Ü=2^P770
Position setpoint interpolator
B-Pos V-Setpointt PRE PosReg P209 (312) KK0881
Src PosSetp P190 (310) [LU] KK0882
B-Pos PosSetp
U953.40 = 3 (3)
Smooth Pos Set 0.0 ...1000.0 ms P191.F (0.0)
PosSetp r200
Pos Reg Kv 0.000..20.000 P204.F (0.100)
Pos RegTn 0..10000 ms P206.F (0)
P202.B (134) PosReg Limit
Src Ctrl Setp P212 (311) KK
KK0418/30xx V-Setpoint SDO/PPO
This block is calculated only after enabling.
Enable
Src SetV PosSet P192 (0) KK0120
Src Set PosSetp P193.B (0) B0628
U952.40 = 4 (20)
U248 (0) B3200 B0105 B0000
HM35 set position No operation
ActPos Smoothing 0.0... 1000.0 ms P195 (0.0)
Pos ActV PosReg r201
Src Pos ActV P194 (120) [LU] KK
Pos ActV KK0120
Pos Reg Enable B0220
Enable RFG bypass by position control [320.6]
Src1 Rel PosReg P210.B (0) B
BPos Set PSR B0877
Src2 Rel PosReg P211 (104) B
Operation B0104
Src Release Ctrl P213 (305) B0649
U923.53 = 4 (20)
U259 (0) B0877
BPos Set PSR B0877
B0649
1 2 3 4 5 6 7 8
Overview: Interconnections for CANopen
MASTERDRIVES MC with B-Pos
from V1.5
01.10.01
MASTERDRIVES MC
- 8520 -

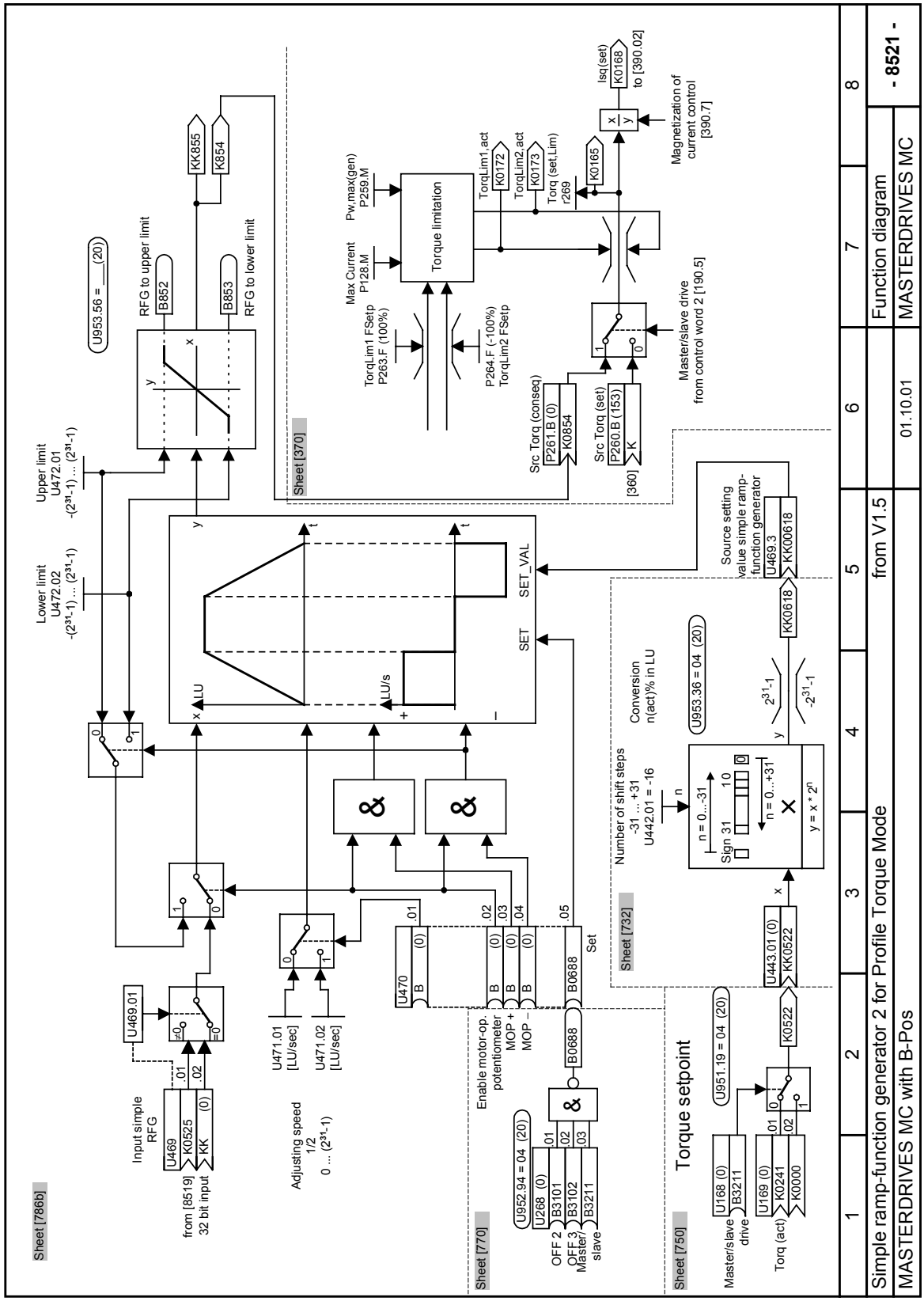
Simple ramp-function generator 2 for Profile Torque Mode
from V1.5
Function diagram
- 8521 -
MASTERDRIVES MC with B-Pos
01.10.01
MASTERDRIVES MC
Sheet [786b]
Input simple RFG
from [8519] 32 bit input
U469
K0525
KK
U469.01
Adjusting speed 1/2
0 ... (2^31-1)
U471.01 [LU/sec]
U471.02 [LU/sec]
Upper limit U472.01 -(2^31-1) ... (2^31-1)
Lower limit U472.02 -(2^31-1) ... (2^31-1)
U953.56 = ___ (20)
RFG to upper limit
B852
RFG to lower limit
B853
KK855
K854
Sheet [370]
Pw,max(gen) P259.M
Max.Current P128.M
Torque limitation
TorqLim1 FSetp P263.F (100%)
P264.F (-100%) TorqLim2 FSetp
TorqLim1.act K0172
TorqLim2.act K0173
Torq (set.Lim) r269
K0165
Isq(set) K0168 to [390.02]
Magnetization of current control [390.7]
Master/slave drive from control word 2 [190.5]
Src Torq (conseq) P261.B (0) K0854
Src Torq (set) P260.B (153) K
[360]
SET_VAL
SET
Source setting value simple ramp-function generator
U469.3
KK00618
KK0618
U953.36 = 04 (20)
Conversion n(act)% in LU
Number of shift steps -31 ... +31 U442.01 = -16
Sign 31 10
n = 0...-31
n = 0...+31
y = x * 2^n
2^31-1
-2^31-1
Sheet [732]
U443.01 (0) KK0522
K0522
U470
B0688
Set
Enable motor-op. potentiometer
MOP +
MOP –
Sheet [770]
U952.94 = 04 (20)
U268 (0) B3101 B3102 B3211
OFF 2
OFF 3
Master/ slave
Sheet [750]
Torque setpoint
U951.19 = 04 (20)
U168 (0) B3211
Master/slave drive
U169 (0) K0241 K0000
Torq (act)

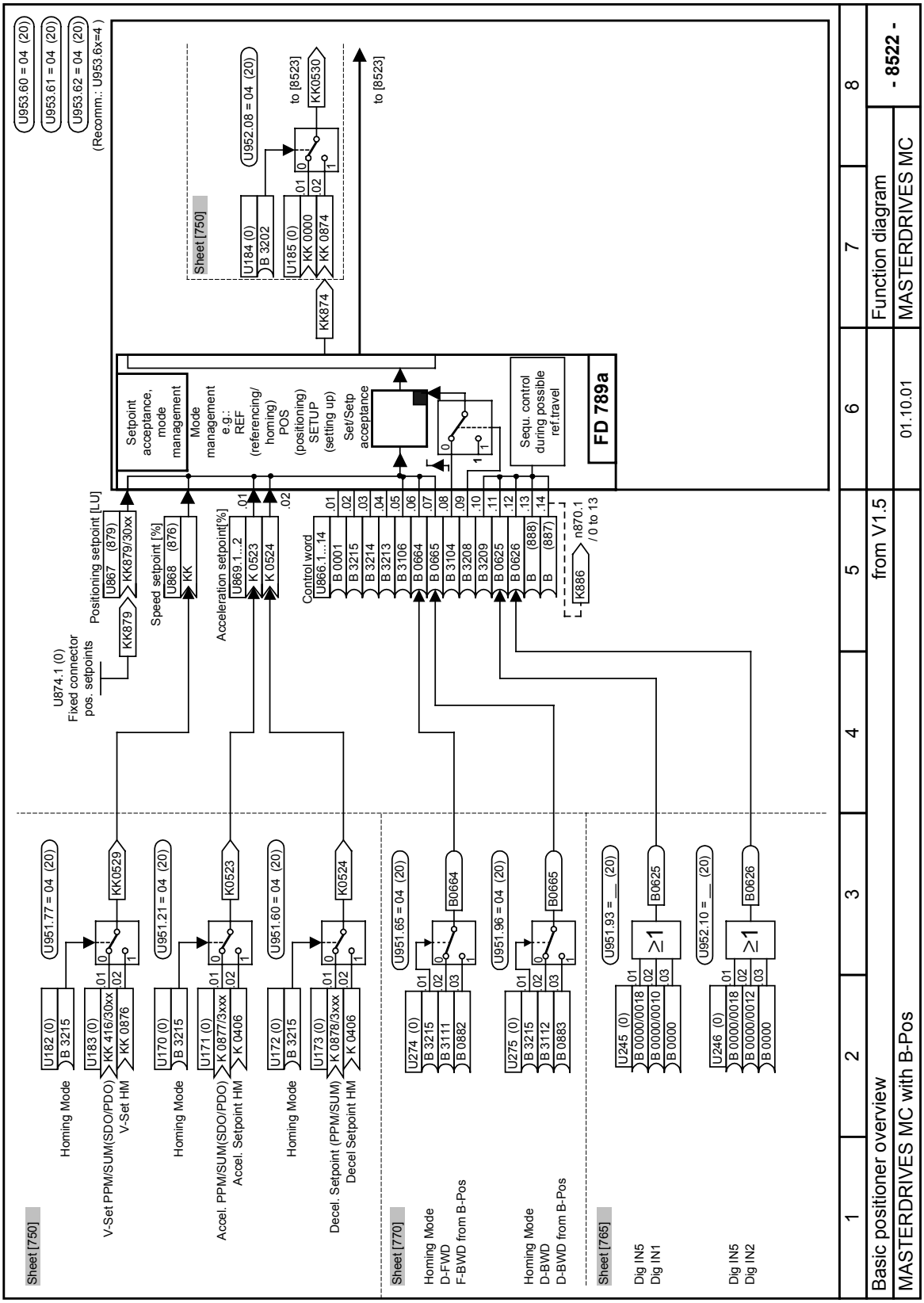
U953.60 = 04 (20)
U953.61 = 04 (20)
U953.62 = 04 (20)
(Recomm.: U953.6x=4)
Sheet [750]
U184 (0)
B 3202
U185 (0)
KK 0000
KK 0874
U952.08 = 04 (20)
to [8523]
KK0530
KK874
to [8523]
Setpoint acceptance, mode management
Mode management e.g.: REF (referencing/ homing) POS (positioning) SETUP (setting up)
Set/Setp acceptance
Sequ. control during possible ref.travel
FD 789a
U874.1 (0)
Fixed connector pos. setpoints
Positioning setpoint [LU]
U867 (879)
KK879/30xx
KK879
Speed setpoint [%]
U868 (876)
KK
Acceleration setpoint[%]
U869.1...2
K 0523
K 0524
Control word
U866.1...14
B 0001
B 3215
B 3214
B 3213
B 3106
B 0664
B 0665
B 3104
B 3208
B 0625
B 0626
B (888)
B (887)
K886
n870.1 / 0 to 13
Sheet [750]
Homing Mode
V-Set PPM/SUM(SDO/PDO)
V-Set HM
U951.77 = 04 (20)
U182 (0)
B 3215
U183 (0)
KK 416/30xx
KK 0876
KK0529
Homing Mode
Accel. PPM/SUM(SDO/PDO)
Accel. Setpoint HM
U951.21 = 04 (20)
U170 (0)
B 3215
U171 (0)
K 0877/3xxx
K 0406
K0523
Homing Mode
Decel. Setpoint (PPM/SUM)
Decel Setpoint HM
U951.60 = 04 (20)
U172 (0)
B 3215
U173 (0)
K 0878/3xxx
K 0406
K0524
Sheet [770]
Homing Mode
D-FWD
F-BWD from B-Pos
U951.65 = 04 (20)
U274 (0)
B 3215
B 3111
B 0882
B0664
Homing Mode
D-BWD
D-BWD from B-Pos
U951.96 = 04 (20)
U275 (0)
B 3215
B 3112
B 0883
B0665
Sheet [765]
Dig IN5
Dig IN1
U951.93 = __ (20)
U245 (0)
B 0000/0018
B 0000/0010
B 0000
≥1
B0625
Dig IN5
Dig IN2
U952.10 = __ (20)
U246 (0)
B 0000/0018
B 0000/0012
B 0000
≥1
B0626
1
2
3
4
5
from V1.5
6
7
8
Basic positioner overview
MASTERDRIVES MC with B-Pos
01.10.01
Function diagram
MASTERDRIVES MC
- 8522 -

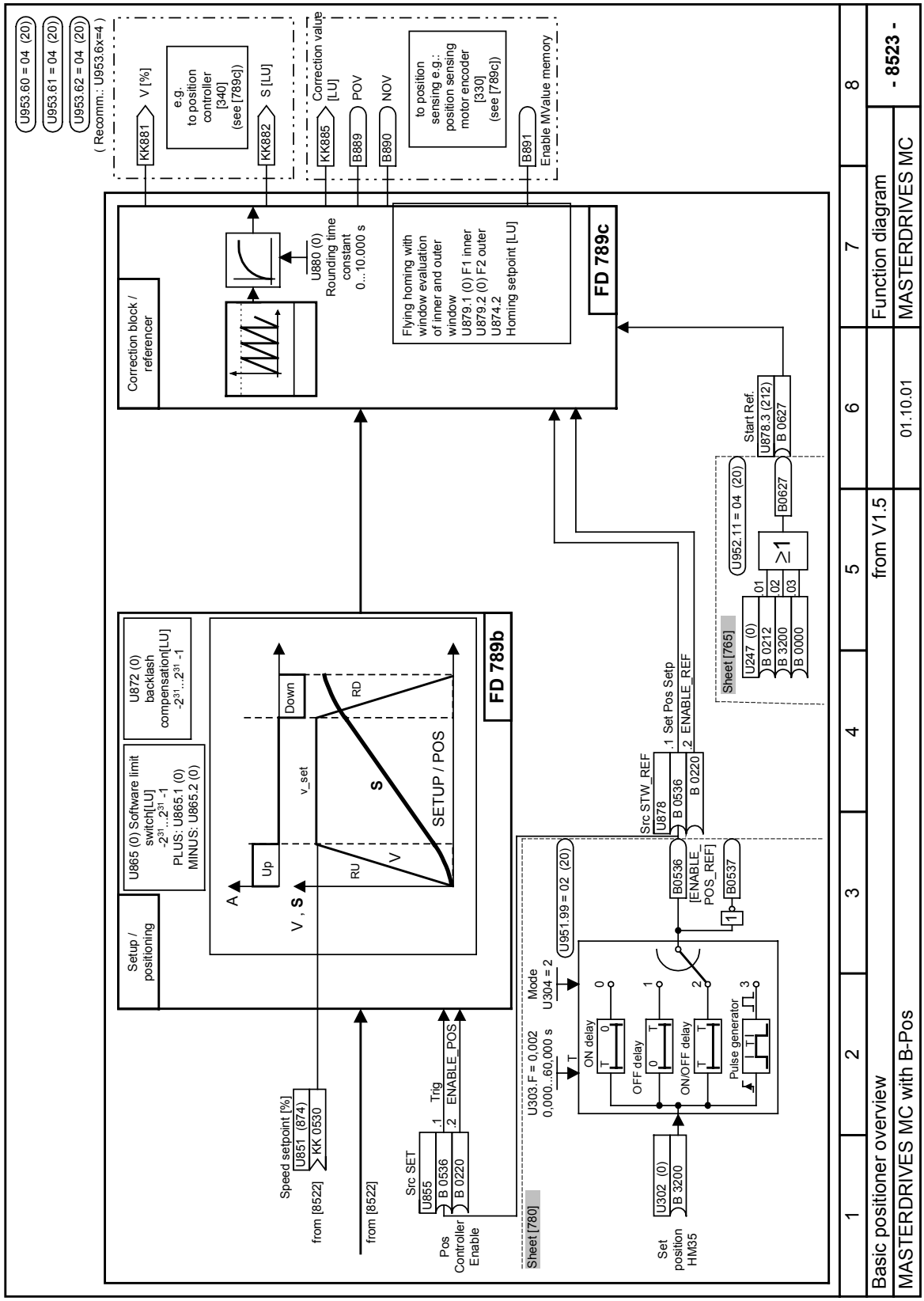
U953.60 = 04 (20)
U953.61 = 04 (20)
U953.62 = 04 (20)
(Recomm.: U953.6x=4)
KK881
V [%]
e.g. to position controller [340] (see [789cj])
KK882
S [LU]
Correction value
KK885
[LU]
B889
POV
B890
NOV
to position sensing e.g.: position sensing motor encoder [330] (see [789cj])
B891
Enable MValue memory
Correction block / referencer
U880 (0) Rounding time constant 0...10.000 s
Flying homing with window evaluation of inner and outer window
U879.1 (0) F1 inner
U879.2 (0) F2 outer
U874.2 Homing setpoint [LU]
FD 789c
Start Ref.
U878.3 (212)
B 0627
B0627
U952.11 = 04 (20)
≥1
01
02
03
Sheet [765]
U247 (0)
B 0212
B 3200
B 0000
Setup / positioning
U872 (0) backlash compensation[LU] -2^31...2^31 -1
U865 (0) Software limit switch[LU] -2^31...2^31 -1
PLUS: U865.1 (0)
MINUS: U865.2 (0)
FD 789b
Down
RD
v_set
S
SETUP / POS
Up
RU
V
A
V , S
Src STW_REF
U878
B 0536
B 0220
.1 Set Pos Setp
.2 ENABLE_REF
B0536 [ENABLE_POS_REF]
B0537
U951.99 = 02 (20)
Mode
U304 = 2
U303.F = 0,002
0,000...60,000 s
ON delay
OFF delay
ON/OFF delay
Pulse generator
Sheet [780]
Speed setpoint [%]
U851 (874)
KK 0530
from [8522]
from [8522]
Src SET
U855
B 0536
B 0220
.1 Trig
.2 ENABLE_POS
Pos Controller Enable
U302 (0)
B 3200
Set position HM35
1
2
3
4
5
6
7
8
Basic positioner overview
from V1.5
Function diagram
- 8523 -
MASTERDRIVES MC with B-Pos
01.10.01
MASTERDRIVES MC

Parameter file for controlling positioning / setup via field bus interface CBC CANopen

The basic communication connections for data transfer via CANopen are made with these parameter settings. Some paramaters (in shaded boxes) will need to be adapted to your application. Open the script file on your SIMOVIS DriveMonitor CD using a text editor and enter the settings appropriate to your application. Then save the file and load it to the device using SIMOVIS DriveMonitor. You will then need to set the motor and controller parameters.

The script file is stored under the following name on your SIMOVIS DriveMonitor CD ROM:

SIMOVIS DriveMonitor for WINDOWS 95 and later:

- **MCEPOS.SSC**
  (load this script file, applies equally for Compact PLUS, Compact and Chassis units)

CB parameter {FD-120-}:

Receive PDOs

P711.01=65281 ;RPDO 1 (Control word, asynchronous)
P712.01=0 ;RPDO 2
P713.01=0 ;RPDO 3
P714.01=0 ;RPDO 4

Transmit PDOs

P715.01=65282 ;TPDO 1 (status word, modopdisplay async.)
P716.01=0 ;TPDO 2
P717.01=0 ;TPDO 3
P718.01=0 ;TPDO 4

CBC parameterization

P719.01=4446 ;Device, device response to lifeguarding
P720.01=4 ;CAN-Bus baud rate (125 kB)
P721.01=1 CAN Profile selection (CANopen)
P722.01=0 ;Message failure time
P918.01=5 ;CB bus address
P053.00=7 ;Parameterization enable

Transmit data {FD-125-}

Transmit PDO 1
P734.01=0431 Status word via BIN/CON converter
P734.02=889 ;Status word B-Pos
P734.03=432 ;Status word 2 B-Pos to BIN/CON Conv 2
P734.04=0250 ;Faults/alarms

Transmit PDO 2

P734.05=0 ;TPDO 2 word 1
P734.06=0 ;TPDO 2 word 2
P734.07=0 ;TPDO 2 word 3
P734.08=0 ;TPDO 2 word 4

Transmit PDO 3

P734.09=0 ;TPDO 3 word 1
P734.10=0 ;TPDO 3 word 2
P734.11=0 ;TPDO 3 word 3
P734.12=0 ;TPDO 3 word 4

Transmit PDO 4

P734.13=0 ;TPDO 4 word 1
P734.14=0 ;TPDO 4 word 2
P734.15=0 ;TPDO 4 word 3
P734.16=0 ;TPDO 4 word 4

Control word 1{FD-180-}

P554.01=3100 ;SRC ON / OFF BICO DS1
P555.01=3101 ;SRC1.OFF2(coast) BICO DS1
P558.01=3102 ;SRC1.OFF3(QStop) BICO DS1
P561.01=3103 ;SRC Inverter Enable
P564.01=3108 ;SRC Setpoint Enable
P565.01=3107 ;SRC Acknowledge

Control word 2{FD-190-}

P587.01=3211 ;SRC Master/slave drive

Digital inputs {FD-90-}

P648.01=4 ;Accept PosMeasV with falling edge

Status word 1 to Bin/Con converter 1{FD-720-}

U076.01=100 ;Ready to start at BIN/CON converter
U076.02=102 ;Ready to run at BIN/CON converter
U076.03=104 ;Operation at BIN/CON converter
U076.04=106 ;Fault active at BIN/CON converter
U076.05=108 ;OFF 2 active at BIN/CON converter
U076.06=110 ;OFF 3 active at BIN/CON converter
U076.07=112 ;Starting lockout at BIN/CON converter
U076.08=114 ;Alarm active at BIN/CON converter
U076.09=0 ;Freely connectable by user
U076.10=1 ;PCD control requested must always be 1
U076.11=476 ;Target_reached at BIN/CON converter
U076.12=136 ;Overspeed: Internal Limit active PVM, SUM
U076.13=0 ;Speed=0, must be generated via FBS
U076.14=0 ;Following Error, generate via FBS
U076.15=0 ;Freely connectable by user
U076.16=0 ;Freely connectable by user
U952.89=4 ;Time slot

Status signals B-Pos to Bin/Con converter 2{FD-720-}

U078.01=92 ;FDS_Bit 0
U078.02=93 ;FDS_Bit 1
U078.03=0 ;Bico data set via FBS or from STW2
U078.04=126 ;RFG active, from RFG
U078.05=894 ;SPV_RIE_ACKN from EPOS
U078.06=201 ;Acceleration active from RFG
U078.07=202 ;Deceleration active from HLG
U078.08=477 ;Output limit monitor, Target reached PTM
U078.09=234 ;T(gr)act, I(gr)act,Int Limit Active PTM
U078.10=3211 ;Master slave fed back from CBC
U078.11=893 ;REF_DRIVE from B-POS
U078.12=205 ;Enable pos. controller from RFG bypass
U078.13=877 ;PSR from EPOS mode manager
U078.14=873 ;SETUP from EPOS mode manager
U078.15=872 ;POS from EPOS mode manager
U078.16=871 ;REF from EPOS mode manager
U952.90=4 ;Time slot

Setpoint processing {FD -320-}

P443.01=131 Src main setpoint BICO DS1 (from pos
P772.00=648 controller)
Position sensing Src Enable RFG bypass from inverter U258
P130.00=3

Motor encoder {FD -330-}

P172.00=880 ;Src PosSetV from Ref. Setpoint U874.02
P173.00=3200 ;Src Set Pos, Bit 0 from CBC receive con.
P174.00=885 ;Src PosCorr'nV from corr'n block EPOS
P175.01=889 ;POV from correction block EPOS
P175.01=890 ;NOV from correction block EPOS
P179.00=891 ;Src En MeasV mem. from corr'n blockEPOS
P183.01=1 ;PosSens for mot.enc, resolv or Enco enable
P183.02=0 ;No zero point offset from encoder

Torque limitation {FD-370-}

P261.01=854 ;Src T(conseq) from simple RFG 2

Position control {FD -340-}

P190.01=882 ;Src position setpoint from EPOS
P192.01=120 ;Src SetV PosSet (PosActV)
P193.01=628 ;Src Set PosSet from output OR U248
P209.01=881 ;PRE PosReg from EPOS
P210.01=877 ;Src1 Rel Pos Reg PSR from EPOS
P212.01=418 ;Src Control Setp,TargetVelocity U018(SDO)
P213.01=649 ;Src Release Control,from Inverter U259

EPOS control signals

{FD-788a-}

U858.01=0 ;Axis cycle length EPOS/SETUP, 0:Linear axis
U858.02=-1 ;Axis cycle length CORR/REF,-1:Index2=Index1

{FD-789a-}

U866.01=1 ;ENABLE POS/REF
U866.02=3215 ;REF ON from CBC, K3002, Bit 15
U866.03=3214 ;POS ON from CBC, K3002, Bit 14
U866.04=3213 ;SETUP ON from CBC, K3002, Bit 13
U866.05=3106 ;POS TYP from CBC, K3001,Bit6,abs/rel
U866.06=664 ;D_FWD from binary signal changeover U274
U866.07=665 ;D_BWD from binary signal changeover U275
U866.08=3104 ;SPV_RIE from CBC,K3001,Bit4,New setpoint
U866.09=3208 ;SPV_RIE_TYP from CBC,K3002,Bit8,1=SUM
U866.10=3209 ;REF_TYP from fixed binector EPOS
U866.11=625 ;REF_BWD_STOP,Outp OR U245,reverse camn
U866.12=626 ;REF_FWD_STOP,Outp OR U246,reverse cam
U867.0=879 ;Position setpoint from fixed setpoint U874.01
U868.0=529 ;V-set from analog changeover U182/U183
U869.01=523 ;Analog signal changeover U170/U171
U869.02=524 ;Analog signal changeover U172/U173
U882.0=104 ;Reset Set setpoint from Status word 1 Bit 2,run
U953.60=4 ;Time slot

{FD-789b-}

U855.01=536 ;Set Trigger SetV from timer for HM 35
U855.02=220 ;ENABLE_POS from position controller enable
U851.00=530 ;v-set output analog ch. U184,U185 (stop)
U859.00=100 ;POS_OK window width = 100LU
U864.00=0,10 ;POS_OK decel time = 0,1s
U865.01=0 ;Software limit switch -plus
U865.02=0 ;Software limit switch -minus
U953.61=4 ;Time slot

{FD-789c-}

U878.01=536 ;Set pos. setp. from timer due to HM 35
U878.02=220 ;ENABLE_REF from pos. control enable
U878.03=627 ;Start-REF from OR U247,set pos||B212
U953.62=4 ;Time slot

1	2	3	4	5	6	7	8
Parameter file "Positioning with EPOS via CANopen"				from V1.5		Function diagram	- 8524 -
MASTERDRIVES MC with B-Pos					01.10.01	MASTERDRIVES MC	

Parameter file for the control of positioning/setup via CBC field bus interface CANopen

The basic communication interconnections for data transfer via CANOpen are made with these parameter settings.
Some parameters (in shaded boxes) will need to be adapted to your application. Open the script file on your SIMOVIS DriveMonitor CD using a text editor and enter the settings appropriate to your application. Then save the file and load it to the device using SIMOVIS DriveMonitor. You will then need to set the motor and controller parameters.

The script file is stored under the following name on your SIMOVIS DriveMonitor CD:

SIMOVIS DriveMonitor for WINDOWS 95 and later:

- **MCEPOS.SSC**
  (Load this script file, applies equally to Compact PLUS, Compact and chassis units)

Free block interconnections
Target Reached Profile Velocity Mode{FD-740-}
U136.01=151 ;Speed setpoint
U136.02=418 Output of fixed setpoint U018,60FF n.mapped
U137.00=500 Smoothing time constant
U138.00=2.00 ;Hysteresis tolerance range 2%
U139.00=2 ;Mode A=B
U951.18=4 ;Time slot
Target Reached Profile Torque Mode{FD-740-}
U141.01=241 ;Torque actual-value
U141.02=525 ;Output of analog signal changeover U175
U142.00=1000 ;Smoothing time constant
U143.00=2.00 ;Hysteresis tolerance range 2%
U144.00=2 ;Mode A=B
U952.49=4 ;Time slot
{FD-750-}
Wiring of setpoints, Stop in some modes
U168.00=3211 ;Bit 11 of CB receive connector 2,1=PTM
U169.01=241 ;Torque actual-value
U951.19=4 ;Time slot
Changeover Acceleration in PPM,SUM or HM
U170.00=3215 ;Bit15 of CB receive connector 2,1=HM
U171.01=877 ;Fixed conn. EPOS U873.2, accel. n. mapped
U171.02=406 ;Fixed connector U006,accel. setp. in HM
U951.21=4 ;Time slot
Changeover Deceleration in PPM,SUM or HM
U172.00=3215 ;Bit15 of CB receive connector 2,1=HM
U173.01=878 ;Fixed conn. EPOS U873.2,decel. n. mapped
U173.02=406 ;Fixed connector U006,deceleration in HM
U951.60=4 ;Time slot
Target Torque for PTM, implementation of Stop
U174.00=618 ;Output AND element U238
U175.01=0 ;
U175.02=408 ;Fixed connector U008, torque setp. in PTM
U951.76=4 ;Time slot
Changeover Profile Velocity in PPM,SUM or HM
U182.00=3215 ;Bit15 of CB receive connector 2,1=HM
U183.01=416 ;Fixed connector U016,V-setp for PPM,SUM
U183.02=876 ;Fixed connector EPOS U873.1,V in HM
U951.77=4 ;Time slot
Stop in PPM, SUM and HM
U184.00=3202 ;Bit2 2.CBC K3002,0=Stop forPPM,SUM,HM
U185.01=0
U185.02=874 ;Valid speed setpoint B-Pos
U952.08=4 ;Time slot
{FD-765-}
Changeover signal for analog changeover for Stop in PTM
U238.01=3108 ;Stop for PVM and PTM
U238.02=104 ;Operation from status word 1
U238.03=3211 ;Bit11 from CBC K3002,1=PTM
U952.92=4 ;Time slot

REF_BWD_STOP, wiring of CBC depending on HM
U245.03=0 ;01,02 wired from CBC
U951.93=4 ;Time slot
REF_FWD_STOP,wiring of CBC depending on HM
U246.03=0 ;01,02 wired from CBC
U952.10=4 ;Time slot
Measured value valid for reference block EPOS (HM 35)
U247.01=212 ;Measured value valid from position sensing
U247.02=3200 ;Bit 0 from K3002, set position from HM 35
U247.03=0
U952.11=4 ;Time slot
Set Pos Setp for position controller
U248.01=3200 ;Bit 0 from K3002, set position from HM 35
U248.02=105 ;No operation from status word 1
U248.03=0
U952.40=4 ;Time slot
{FD-770-}
Inverter U258 to P772 (Src EnRGenByp)
U258.00=3212 ;Bit 12 from K3002, 1=PVM
U952.41=4 ;Time slot
Inverter U259 to P213 (Src Release Ctrl)
U259.00=877 ;PSR from EPOS
U952.53=4 ;Time slot
NAND U268 to U470.05 (set simple RGEN 2 for PTM)
U268.01=3101 ;OFF 2 from CBC, K3001 bit 1
U268.02=3102 ;OFF 3 from CBC, K3001 bit 2
U268.03=3111 ;Bit 11 from CBC, K3002, 1=PTM
U952.94=4 ;Time slot
Binary changeover U274 to EPosD_FWD,changeoverHMandPPM/SUM
U274.01=3215 ;Bit 15 from CBC K3002, 1=HM
U274.02=3111 ;Bit 11 from CBC K3001
U274.03=882 ;D_FWD from fixed binector, EPOS
U951.65=4 ;Time slot
Binary changeover U275 to EPosD_BWD,changeoverHMandPPM/SUM
U275.01=3215 ;Bit 15 from CBC K3002, 1=HM
U275.02=3112 ;Bit 12 from CBC K3001
U275.03=883 ;D_BWD from fixed binector, EPOS
U951.96=4 ;Time slot
{FD-780-}
Time element U302-U304 to U855.01 and U878.01 from EPOS
U302.00=3200 ;Set position from CBC K3002, bit 0
U303.01=0,002 ;2ms time delay
U304.00=2 ;ON/OFF delay
U951.99=2 ;Time slot
{FD-732-}
Shift multiplier U442,U443 to U469.03,Src SetV RGen
U442.01=-16 ;Division by 2^16, adjustment KK-->K
U443.01=522 ;Select torque SetV, changeover U168,169
U953.36=4 ;Time slot

{FD-786b-}
Simple RGen for PTM U469-U472,K854 = Tset
U469.01=525 ;Analog changeover U174/U175 for stop
U469.02=0
U469.03=618 ;Output shift multiplier setting value
U470.01=0
U470.02=0
U470.03=0
U470.04=0
U470.05=688 ;Set, output NAND element U268
U471.01=32768 ;Torque Slope, 200% per second
U471.02=0
U472.01=16383 ;100%, upper torque limit value
U472.02=-16384;-100%, lower torque limit value
U472.03=0
U953.56=4 ;Time slot
Display parameter r047.05: output current{FD-30-}
P046.05=242 ;Output current
F151 Initialization fault{FD-710-}
U064.00=3201 ;Bit 1 from 2nd CBC receive connector
U952.62=7 ;Time slot

1	2	3	4	5	6	7	8
Parameter file "Positioning with EPOS via CANopen"				from V1.5		Function diagram	- 8525 -
MASTERDRIVES MC with B-Pos					01.10.01	MASTERDRIVES MC	

8.5.13 Terms and abbreviations

B-Pos	Basic Positioning
CAL	CAN Application Layer
CAN	Controller Area Network
CBC	Communication board for CAN (CANopen)
CiA DS	CAN in Automation Draft Standard
CiA DSP	CAN in Automation Draft Standard Proposal
F01	Technology option for MASTERDRIVES MC
HM	Homing Mode
IND	Parameter Index
MC	Motion Control
MDx	Machine Data
NMT	Network Management
PDO	Process Data Object
PFSF	Position-Feedback Scaling Factor
PKE	Parameter Identifier
PKW	Parameter Identifier Value
PNU	Parameter Number
PPM	Profile Position Mode
PSH	Positioning with Setup or Homing
PTM	Profile Torque Mode
PVM	Profile Velocity Mode
PWE	Parameter Value
Pxxx.xx	Parameter with number
R_PDO	Receive Process Data Object
SDO	Service Data Object
SPM	Toggle bit for parameter change report (not supported by the CBC)
SUM	Setup Mode
TI	Task Identifier
T_PDO	Transmit Process Data Object
Uxxx.xx	Parameter above 2000

9 Technology Option F01

9.1 Enabling Technology Option F01

Technology option F01 can only be used on a MASTERDRIVES unit if the unit was supplied from the plant of manufacture with option F01 already enabled or if the option was enabled afterwards by entering a PIN number. Please consult sheet [850] of the function diagram to find out

- Whether option F01 is enabled on your MASTERDRIVES unit
- How to enable option F01 temporarily as a "demo version" for a period of 500 hours using the special PIN number
- How to enable option F01 as a "full version" after the MASTERDRIVES unit is supplied

9.2 Overview of the Documentation

The figure below shows you an overview of the documentation available for technology option F01:

MASTERDRIVES MotionControl Compendium

- Technology option F01 Chapter 9	⇦ - Application areas - Brief description of positioning, synchronization and encoder/position sensing - Communication with the technology - Configuration and application examples - Commissioning, faults, warnings, diagnostics
- Function diagrams	⇦ Function diagrams of technology [799...850]
- Parameter lists	⇦ Parameters of technology (U500...U799)
- Faults and warnings	⇦ Faults and warnings of the technology (A129...A255)

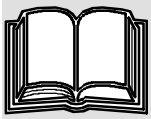

Motion Control Manual for MASTERDRIVES MC and SIMATIC M7

This manual is an essential requirement!

Order number:
6AT1880-0AA00-1AE0 (German)
6AT1880-0AA00-1BE0 (English)

Detailed Technical Reference Manual /1/

- Part 1: Technology Functions:
  - Function Description
  - Programming Guide
  - Positioning and Synchronization
  - Writing NC Programs
- Part 2: SIMATIC S7 Communication Functions
  - GMC-BASIC Standard Software (Configuring Package)
  - Task Description
- Part 3: User Interfaces
  - Motion Control HMI Package (GMC-OP-AM standard software with standard screens for OP25, OP27, OP37, TP37, etc.)

Fig. 9-1 Overview of the Documentation for Technology Option F01

This chapter (Chapter 9) of the Compendium contains an overview of the position encoders that can be used for position sensing, and the systems used for their evaluation. It also describes the position controller and the technology functions for positioning and synchronization.

The **"Application Areas"** section describes the positioning and synchronization functions contained in the MASTERDRIVES MC converters and the applications you can implement using these functions.

The **"Brief Description of the Technology Functions"** section provides you with an overview of the technology used to implement the positioning and synchronization functions and the position sensing and control system. This section makes reference to the function diagram.

The **"Application Examples"** section shows you how to configure the technology functions and connect them to the functions of the basic unit. In this section you will also find easy-to-understand application examples, suitable for your own studies, which will help you get started with the implementation of positioning and synchronization applications based on MASTERDRIVES MC.

In the **"Commissioning"** section you learn how to commission a positioning or synchronization axis step by step.

All technology functions are presented clearly in graphical form in the **"Function Diagrams"** chapter of the Compendium, sheets [799]...[850]. The position sensing and control systems are described in this section in [230...270, 330...340]. All references to function diagrams are quoted in brackets with the [sheet number].

The setting and monitoring parameters and the binectors and connectors for the technology functions are contained in the "**Parameter Lists"** chapter of the Compendium.

You will find detailed information on all the technology functions in Chapter 5 "Function Description" of the **"Motion Control for MASTERDRIVES MC and SIMATIC M7"** manual /1/. This manual provides a complete function reference which you should consult in cases of doubt. It also contains a detailed description of the machine data, all the technological control and checkback signals and the timing diagrams for the execution of traversing movements in all operating modes. Section 6 of this manual contains a **Programming Guide** which you will need in order to write automatic NC programs.

NOTES

- In addition to the Compendium, **you need** the "Motion Control for MASTERDRIVES MC and SIMATIC M7" manual /1/ for the configuration and commissioning of technology option F01 (see the "References, Software Products and Accessories" section).
- The 🕮 symbol refers to further information in other main chapters of the Compendium and other documents.

9.3 Application Areas

The "Technology Software F01" software option contains the following functions:

- Positioning
- Angular synchronization

A MASTERDRIVES MC power converter with the "technology" software option can be ordered by specifying the MLFB extension "F01". The "technology" software option can also be enabled, using a PIN number, on a power converter which was not supplied with this option (e.g. if replacing the hardware during a service call; see the section entitled "Enabling Technology Option F01").

In the following section you will find a brief overview of the "Motion Control Technology Software" option and its possible applications. The subsequent section, "Brief Description of the Technology Functions", provides you with more detailed information on the technical implementation of the technology functions.

NOTE

Technology functions synchronism (U953.33) and positioning (U953.32) must not be enabled simultaneously.

NOTE

If the technology functions are slotted into the time slot and the technology is not enabled with the PIN, diagnostics fault F063 occurs. The fault can only be eliminated by entering the correct PIN in U977.01 and U977.02 and subsequently switching the power supply off and then on again, or by removing the technology functions from the time slots again (by setting U953.32 = 20 and U953.33 = 20).

9.3.1 General Functions

The Motion Control technology software includes the following general functions:

- **Linear axis** (with fixed stops and a maximum traversing range of 1000 m with a resolution of 1 µm); software limit switches are evaluated. A transfer carriage is an example of a linear axis:

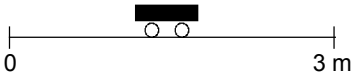

Fig. 9-2 Linear Axis

- **Rotary axis** (rotating infinitely, without fixed stops, with specification of the direction or direction of the "shortest path"). A rotary table is an example of a rotary axis:

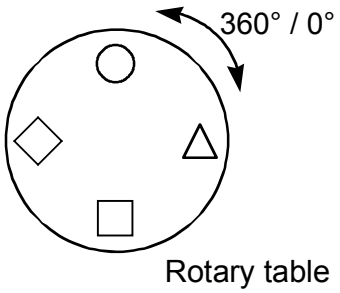

Fig. 9-3 Rotary Axis

- **Roll feed** (infinitely rotating rotary axis with "cut-to-length" function). The figure shows the roll feed as used in a cutting device:

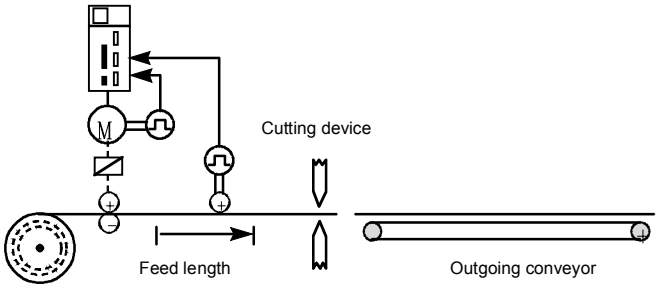

Fig. 9-4 Roll Feed

- Either the **internal motor encoder** (resolver, optical encoder, absolute encoder, incremental encoder) or an external machine encoder (incremental or SSI absolute encoder) connected to the machine tool can be used as the position encoder [230..270].
- A **sophisticated precontrol** strategy is implemented in the Motion Control software: the position ramp-function generator adjusts the speed and accelerating torque continuously, bypassing the position controller, in order to achieve an optimum dynamic response and a negligible following error.
- The wear on the mechanical equipment is low, even if the full dynamic response is utilized, thanks to the position ramp-function generator with its flexible jerk limitation and acceleration adjustment.

9.3.2 Positioning

The MASTERDRIVES MC servo converter has a convenient integrated positioning control system with the following functions:

- **Setup:** Position-controlled axis travel in jog mode [819]
- **Homing:** The procedure used to zero the position measurement system when an incremental encoder is used (not usually required for absolute encoders) [821]
- **MDI:** Point-to-point positioning (**M**anual **D**ata **I**nput) [823]
  - Relative or absolute positioning (absolute or incremental dimensions)
  - Definition of an MDI block with position, velocity and acceleration
  - The MDI block can be defined directly from the machine control – e.g. via PROFIBUS-DP – or can be retrieved, using control commands, from a table of 10 fixed position setpoints stored on the MASTERDRIVES MC. The start command can be transmitted in the same PROFIBUS message as the MDI block, a feature that allows convenient, time-optimized control of the positioning operation from a mini PLC.
  - It is possible to change to another MDI block on-the-fly during traversing.
  - The start command (and the read-in enable for the roll feed) can be transmitted via digital inputs on the MASTERDRIVES MC or via a field bus.
- **Automatic mode:** [826...828]
  - Automatic execution of complete positioning programs
  - Single-step mode possible
  - Development of NC programs using a high-performance programming language in conformity with DIN 66025 (the standard of the German mechanical engineering industry)
  - Input of NC programs via an S7-300 (input via parameter interface and via the DriveMonitor service program under development)
  - Up to 20 programs with a total of 50 blocks (NC traversing commands) programmable
  - Program-driven output of switching functions (M functions)
  - Block change on-the-fly via digital input
  - Start and read-in enable also possible via digital input
  - Programmable zero offset, tool offset and backlash compensation
  - G function acceleration control
  - Set actual value on-the-fly
  - Start command, block change and read-in enable definable via field bus or digital inputs

- Teach-in: allows the current position to be saved in an NC block in setup mode
- Velocity, acceleration and time override
- Collision monitoring via external input
- Simulation mode for testing automatic programs without a motor, e.g. for recording the position setpoint curve with M function simulation

♦ **Roll feed** [830]:

- Automatic cut-to-length feature for presses, punching machines and cross-cutters in start/stop mode
- Definable velocity/ acceleration profile of traversing curve. This achieves optimum cycle times with the lowest possible material wear and slippage.
- Switchover possible between external machine encoder and motor encoder (at standstill)
- The loop count (number of cut-to-length processes) can be programmed.

Applications for the positioning function

Positioning drives in the following fields are typical applications of MASTERDRIVES MC:

♦ Woodworking machines
♦ Roll feeds for presses
♦ Packaging machines
♦ Drive tasks in the glass, brick and tire industries and in general mechanical engineering applications

The following figure shows an example application for the automatic function on an automatic drilling machine in the woodworking industry:

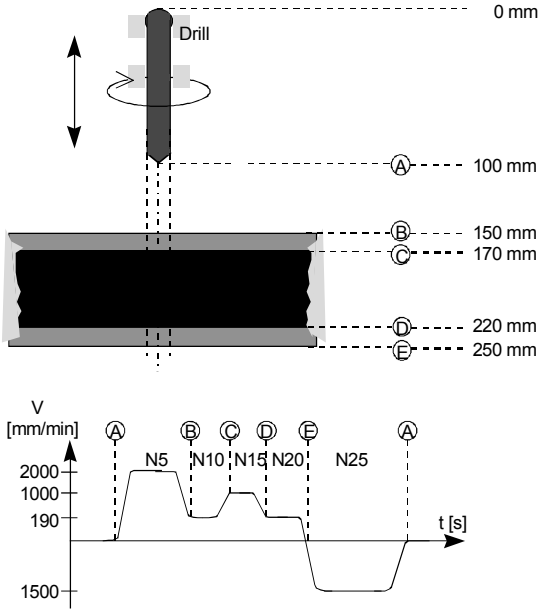

NC-Program

N5 X150 F2000 G44 D1:	Block no. 5: move to position 150 mm at velocity 2000 mm/min, save tool offset (G44) in D1 (100 mm)
N10 X170 F190:	Block no. 10: move to position 170 mm at velocity 190 mm/min
N15 X220 F1000:	Block no. 15: move to position 220 mm at velocity 1000 mm/min
N20 X250 F190:	Block no. 20: move to position 250 mm at velocity 190 mm/min
N25 X 0 F1500 D0:	Block no. 25: return to initial position 0 and deselect tool offset (D0)

Fig. 9-5 Example of an Automatic Program

The figure shows a typical application for an NC program running automatically on the MASTERDRIVES MC. A chip board, which is laminated on both sides, is drilled in the following sequence of NC program steps:

- Travel A ⇒ B: The drill support travels in rapid traverse until just before the material and starts to reduce the feedrate. At exactly point B, the drill reaches the reduced feedrate for drilling through the laminated plastic.
- Travel B ⇒ C: Slow drilling of the laminate
- Travel C ⇒ D: The actual chip board is drilled at the normal feedrate.
- Travel D ⇒ E: The reduced feedrate is applied again for the lower layer of laminate.
- Travel E ⇒ A: The drill returns at increased velocity.

The NC program input on the MASTERDRIVES MC is also listed in the figure above.

9.3.3 Synchronization

General synchronization functions [831]

The following synchronization functions are included:

- Electronic shaft (angle-synchronous, long-term stable synchronization of several axes)
- Electronic gearbox (with sensitive transmission ratio adjustable via numerator and denominator; value range for numerator and denominator -32767 ... +32767)
- The transmission ratio can also be changed during operation. If necessary, the defined transmission ratio can be controlled via a free ramp-function generator [791] to prevent jumps.
- Electronic cam
  - "Table synchronization" with up to 400 interpolation points on the MASTERDRIVES MC. The 400 interpolation points can be distributed variably among one to eight tables. One table can be reloaded in the background while the other is running online. The interpolation between the points is linear.
  - The interpolation points do not have to be equidistant, but can be arranged closer to each other in critical zones and further away in linear areas.
  - Table change on-the-fly possible during operation
  - The table is scalable in the X and Y directions, and has an integrated gearbox

- The path/angle setpoint can be defined by a "real" machine axis (internal or external) or by a software "virtual" master.
- 2 interrupt-capable digital inputs for the detection of synchronization signals, e.g. printing indices

NOTE

The synchronism block should be called up in time slot T4 (2953.33 = 4). Calling the block in shorter times slices (U953.33 < 4) is not permissible.

SIMOLINK as synchronization control backbone [140...160]

The serial SIMOLINK setpoint interface allows angle-synchronous connection of all drives involved in the angular synchronization. SIMOLINK is a high-speed fiber-optic ring which operates at 11 Mbaud and transmits the angle setpoints from drive to drive or from a host system to the drives. For example, SIMOLINK needs only 630 µs to transfer 100 values of 32 bits each. Special SYNC messages enable quartz-accuracy, jitter-free synchronization of the sampling times of up to 200 connected converters. The result is highly dynamic, angle-synchronous drive operation. The master pulse generator is not normally required, since its function is reproduced by software and transmitted angle-synchronously via SIMOLINK (the principle of the "virtual master axis [831]"). Conventional operation with a real master, i.e. a master pulse generator, is naturally also possible [833].

Thanks to SIMOLINK, the master drive function can be assigned to any drive or to a higher-level control system. This is particularly necessary for machines whose drives are removed from the drive train, e.g. for shaftless printing machines. The master drive function can also be performed by a drive that is removed temporarily from the drive system. SIMADYN D, SIMATIC FM458 or SICOMP SMP can be used as the host control system; SIMOLINK interfaces are available for these systems.

Electronic gearbox [835]

The electronic gearbox is a simple substitute for all types of variable-speed gearbox and shafts. The exact gear factor is defined as a fraction with numerator and denominator (16 bits each). The electronic gearbox can be used with all encoders mounted on Siemens motors, including absolute encoders and encoders with SSI-standard protocols.

Electronic cam for reproducing mechanical contours [839]

The electronic cam enables angle-synchronous relative movements between a master and slave drive. It acts as a substitute for mechanical eccentric cams or cranks, as illustrated in the figure below:

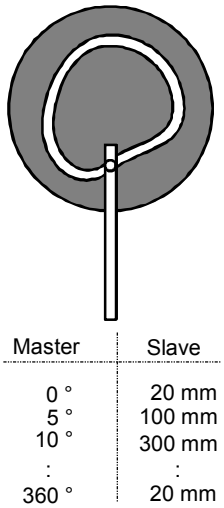

Fig. 9-6 Electronic Cam ("Table Synchronization")

Up to 400 coordinate pairs describe the relative movement by means of table interpolation. These 400 interpolation points can be subdivided into one to eight curves; x and y-axis coordinates can be entered separately; the x values do not have to be equidistant. These parameter settings can naturally also be configured via PROFIBUS-DP, and the cam can therefore be modified in a matter of seconds.

Engaging/ disengaging cycle for product separation and grouping [834]

The engaging/disengaging cycle allows manipulated engaging and disengaging of angular synchronization, including the cam function, at an accurately defined coupling position for a period of one or more machine cycles. The ramp for the engaging/disengaging cycle can be defined as a path. The engaging/disengaging cycle can also be started via a digital input.

The disengaging cycle can be used in order to group products, for example if one product is missing from a continuous product stream. The disengaging cycle stops the drive (slave drive) at a parking position on request, and rejoins the master drive in angular synchronism after one or more machine cycles (product lengths).

The engaging cycle can be used, among other applications, to sort out reject products. The function operates according to the same principle as the disengaging cycle, although in this case the drive is coupled in angle synchronism with the master drive from its parking position for a period of one or more machine cycles, before returning to its exact parking position again.

The engaging/disengaging cycle can also be used in combination with the gearbox and the cam.

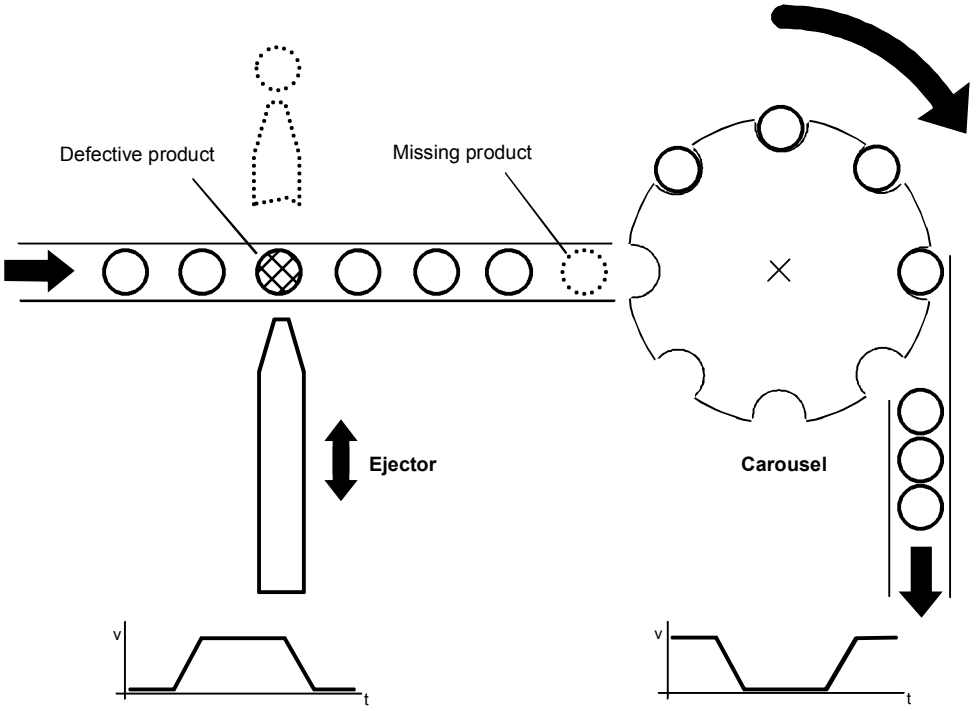

Fig. 9-7 Application Example of Engaging/Disengaging Cycle for Removal of Reject Products in a Packaging Machine

Printing index controller [843]

The printing index controller (position correction) acts in combination with suitable reading devices to control the orientation of the master and slave drive in relation to each other. The synchronization signal is evaluated by a high-speed interrupt-capable digital input with a resolution of several µs. The velocity at which the orientation or correction movement is performed is adjustable.

An example of printing index evaluation is a packaging machine in which a continuous stream of products has to be packaged in film, such that the printed image on the packaging film always appears in the same position. By detecting the printing index on the film, the film expansion (or film contraction) can be measured and automatically corrected. Drift effects, which would be apparent without a printing index controller, are thus eliminated reliably.

The figure below illustrates the principle of printing index synchronization

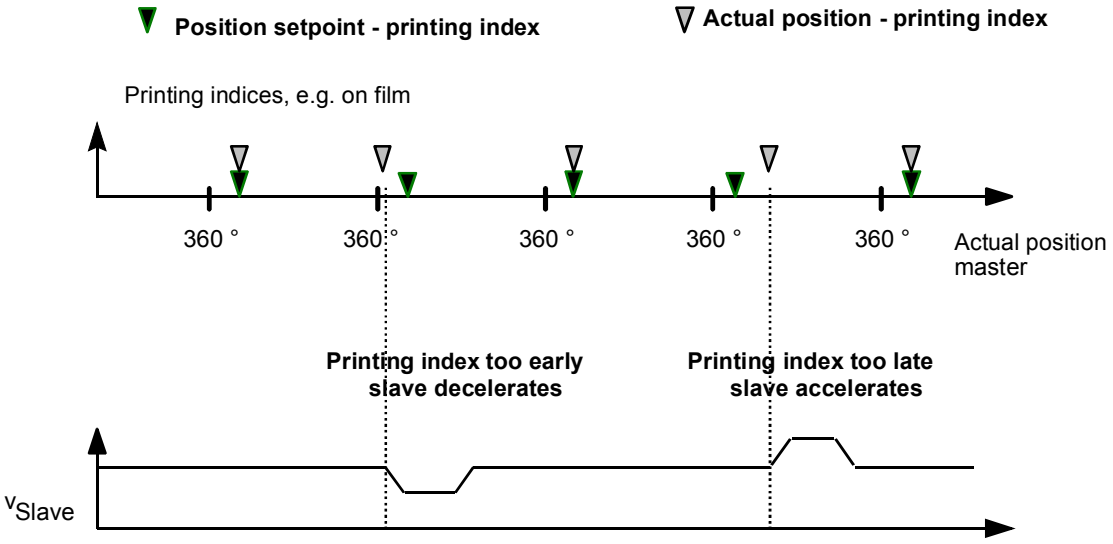

Fig. 9-8 Principle of Printing Index Synchronization

Referencing "on the fly" [843]

The referencing "on the fly" function enables synchronization to a reference index (e.g. BERO proximity switch) to take place "on the fly" in synchronization mode.

It is no longer necessary to first approach the reference index in positioning mode and then change over to synchronization mode from standstill.

Synchronization to master value [841]

The "Synchronization to master value" function enables the position of the slave axis to be matched to the position of the master axis during synchronization. The speed and acceleration of the compensation movement required for this are adjustable.

Displacement angle setting [841]

An angle of displacement can now be conveniently set for synchronization in the following 3 alternative ways:

- Setting an absolute displacement angle via a selectable connector
- Setting a relative displacement angle via connectors or parameters which can either be supplemented in a positive or a negative direction, depending on the current zero position.
- Setting a relative displacement angle in inching mode with a selectable variable speed (similar to a motorized potentiometer).

These displacement angle settings can be made in any random size. Overflows of more than one slave axis revolution can be coped with. The displacement angle setting can be used, for example, to set up an index control system for printing machines.

Catch-up [837]

The catch-up function enables a drive to be uncoupled from an angular-locked synchronizing multi-motor system (e.g. shaftless printing press) and to be operated autonomously at its own speed setpoint ("isolated setpoint"). It also enables a drive to halt at a specified angular position.

The drive can catch up to the speed of the running machine from the halt position or from its current speed in autonomous operation. After the catch-up command has been set, the drive accelerates to the machine speed and can then be coupled back accurately into angular synchronization after reaching speed synchronization.

Applications for the synchronization function

The angular synchronization control system is a substitute for mechanical shafts, gearboxes and cams, e.g. in

- Shaftless printing presses
- Packaging and bottling machines
- Shuttle looms and other textiles machinery
- Gantry systems
- Conveyor systems

9.3.4 Technology Functions Already Included in the Standard Software

Cam controller

A cam controller activates and deactivates digital outputs when certain positions, defined by parameter settings, are reached. This response is used to actuate external switching elements – such as pneumatic valves – at defined positions in a sequence of movements ("position cam"). Certain convenient cam controllers allow the operating time of the external switching elements to be controlled according to the velocity. Such systems are known as "time cams".

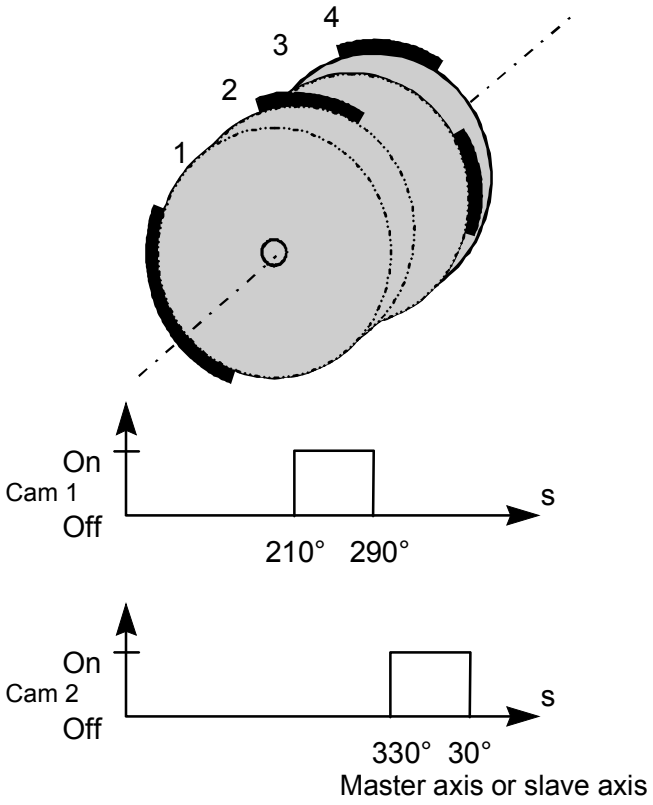

Fig. 9-9 Cam Controller with MASTERDRIVES MC

The standard software of MASTERDRIVES MC contains free blocks for 2 simple cam controllers [745]. Each has two position cams which can be supplied with separate input signals, e.g. a slave path setpoint and a master path setpoint. A total of 4 cams is therefore available with independently adjustable activation and deactivation positions, adjustable hysteresis for the switching instants, and a minimum time resolution of 500 µs. The outputs of the cam controllers are binectors B480...B483, and these can be connected as desired, e.g. to digital outputs of the MASTERDRIVES unit for actuation of solenoid valves, etc.

Velocity-dependent switching time compensation and time cams are not provided, however it is often possible to implement these functions using the timers [780] in the free blocks. If you require an external high-speed cam controller with switching time compensation and additional time cams, you should use an external hardware cam controller, such as the SIMATIC S7 FM 352 module ("FM cam") or technology board T400.

9.3.5 Seamless Integration in SIMATIC Automation Solutions

The tried-and-tested standard function block packages DVA_S5 /3/ for SIMATIC S5 and Drive ES, SIMATIC /4/ for SIMATIC S7 provide convenient access to all process data and parameters of the MASTERDRIVES MC using the PROFIBUS-DP or USS protocols - not only for standard functions, but for all technology functions.

For example, a positioning NC block ("MDI block") can be defined and the movement started simultaneously in one PROFIBUS-DP message. The complete traversing process now runs without further intervention from the PLC. At the end of the movement, the axis returns a checkback message indicating that the target position has been reached. The same procedure is naturally also used with other field buses (CAN bus, USS etc.).

The following components are also available for the seamless integration of MASTERDRIVES MC in a SIMATIC S7-300 or S7-400 automation system using distributed technology (see Catalogs LS01 and /1/):

- **SIMATIC S7 "Motion Control Configuring Package" on CD-ROM (contained in /1/):**
  Software for communication between the S7 user program and the technology via PROFIBUS-DP across a clear, easy-to-handle data interface for the following functions:
  - Transfer of control/checkback signals to the technology
  - Task interface for defining MDI and automatic NC blocks and programs, gear ratios, cam tables, etc.
- **Motion Control HMI Package for SIMATIC S7 (see /2/):**
  Software for the application interface to operator panels OP25, OP27, OP37, TP27, etc. with standard screens for operating the positioning axes, including the following functions:
  - MDI and automatic NC program input
  - Input of machine data and cam tables
  - Diagnostic screens with definition/display of control and checkback signals

You will find further information in the section entitled "Communication with the Technology".

9.4 Brief Description of the Technology Functions

9.4.1 Overview of the Function Diagrams

The function diagrams are an important work reference for configuring and commissioning the technology functions. The position sensing and control system and the F01 technology option are presented graphically in the following function diagrams:

- Function diagrams [230] ... [270]: Position encoder evaluation
- Function diagrams [330] and [335]: Position sensing, generation of the actual position
- Function diagram [340]: Position control
- Function diagrams [799] ... [802]: Overview of technology option F01 and the mode manager
- Function diagrams [804] ... [818]: Input/output signals of the technology
- Function diagrams [819] ... [830]: Positioning modes of the technology
- Function diagrams [831] ... [843]: Synchronization functions of the technology
- Function diagram [850]: Enabling of technology option F01 per PIN number

You will find a brief description of these functions here in Section 9.4.

You will find detailed reference information on all positioning and synchronization functions in the "Motion Control for MASTERDRIVES MC and SIMATIC M7" manual /1/.

The equipment is supplied with technology option F01 not active. In order to use it, you must

- Connect the technology option to the basic unit using BICO technology and
- Nest it in the desired sampling times.

See the section entitled "Technology Overview and Mode Manager" and [802].

The following sections provide you with a brief introduction to the technology with reference to the relevant pages of the function diagram.

9.4.2 Integrating the Technology into the Basic unit [801]

On sheet [801] of the function diagram, you can see how to connect technology option F01 to the basic unit functions below using BICO technology:

- Position sensing (for either motor encoder or external machine encoder)
- Position and speed controller
- Free blocks (the cam controller [745] , ramp-function generator [790 + 791] and logic blocks [765...780] are of particular relevance)
- Communication interfaces (USS, PROFIBUS, etc.)
- SIMOLINK drive coupling
- Hardware terminals (digital/analog I/O terminals of the MASTERDRIVES)

The main connections are already preset at the factory (indicated by "(WE)" in the diagram). Further information on the connections that still need to be made is provided in [815], [817], [836] and in the section entitled "Commissioning the Technology".

Incidentally

The centralized technology functions for positioning and synchronization in a host control system – such as SIMATIC FM458 or SIMADYN D – are integrated via the same connection points as technology option F01.

9.4.3 General Information on Position Encoder Evaluation [230] ... [270]

You will find an overview of the position encoders that can be evaluated in MASTERDRIVES MC, together with details of their resolution and accuracy in the section entitled "Configuration".

The following position encoders can be evaluated in MASTERDRIVES MC (see also [801.1]:

One of the following encoders can be used as a **motor encoder** for position sensing by inserting a sensor board in slot C:

- Resolver [230]
  Sensor board: SBR1/SBR2 (with/without pulse encoder simulation)
- Optical sin/cos encoder [240], e.g. ERN 1387
  Sensor board: SBM2
- Pulse encoder [250] (for asynchronous motors; pulse encoder in V1.2 not yet released as motor encoder for positioning and synchronization)
  Sensor board: SBP
- Multiturn absolute encoder [260], e.g. EQN 1325, EQI 1325
  Sensor board: SBM2

The following encoders can be evaluated as **external machine encoders** for position sensing:

- Pulse encoder [255]
  Sensor board: SBP
- Multiturn encoder [270] , e.g. encoder with EnDat or SSI protocol
  Sensor board: SBM2
  (with analog fine resolution for EQN)
- Optical sin/cos encoder
  Sensor board: SBM2

The sensor board for the external machine encoder can be plugged into any slot except slot C. When a supplementary technology moduleT100, T300 or T400 is used, the evaluator module for external machine encoder must have been plugged into Slot A.

All encoder evaluation systems generate a B070 status signal (or B071 for external encoders) which returns a "1" signal whenever the measured data acquisition system is operating error-free.

NOTE

When a pulse encoder is employed as the motor encoder, the referencing modes "To Left of BERO" and "To Right of BERO" cannot be used since this type of encoder does not evaluate the zero pulse.

NOTE

If the external encoder is required for an application, the block "Position acquisition external encoder" (function diagram 335) must be slotted either in the same time slot as or a faster time slot than the technology function.

Overview

The positional information is required, in addition to the speed, for the technology functions. The MASTERDRIVES MC enables direct position sensing by the motor encoder, and so a further externally mounted encoder is not required for position control. An additional external encoder need only be used for position sensing if this is necessitated by the application technology. The encoder types can be subdivided into incremental and absolute encoders.

Incremental encoders

Incremental encoders (pulse encoders) only detect relative changes in position. The encoder system must be referenced, in order to allow absolute positioning. This is performed using a proximity switch (BERO) with a known mechanical position.

Absolute encoders

Absolute encoders can be subdivided into two groups:

- **Singleturn encoders** (two-pole resolvers, optical sin/cos encoders) indicate the absolute position within one revolution. If you need to perform absolute positioning movements over several revolutions with a singleturn encoder (this is normally the case), the system must be referenced as with an incremental encoder.
- **Multiturn encoders** detect the position over a defined range (e.g. 4096 revolutions) in addition to the position within one revolution, and they store this value when the power supply is switched off. Referencing is therefore not necessary with a multiturn encoder.

The following equipment variants of the MASTERDRIVES MC with encoder evaluation boards ("Sensor boards") are possible. A maximum of 2 encoders can be evaluated simultaneously in these configurations:

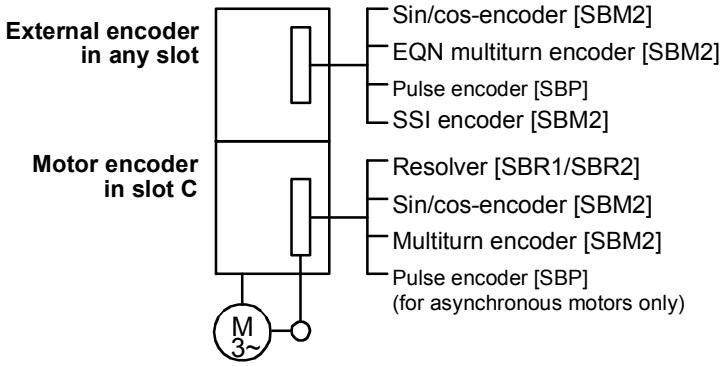

Fig. 9-10 Overview of Suitable Sensor Boards

9.4.4 Resolver Evaluation [230]

Principle

The resolver operates with an analog inductive measuring system. The resolution of the analog signals is 4096 increments per revolution. The positioning accuracy of the resolver that can be achieved under practical conditions is limited to approximately 1000 steps per motor revolution.

The two-pole resolver measures the absolute position of the rotor from 0° to 360°. In multi-pole resolvers, the measured position is not assigned to a unique mechanical rotor position.

Sensor boards SBR1 and SBR2 are available (with/without pulse encoder simulation) for the evaluation of resolver signals [230].

Cable length

Cable lengths of up to 150 m can be used for the two-pole resolver. Attention should be paid to proper EMC installation (screening, physical separation of the power cables). Please also keep in mind that – irrespective of the type of converter, pulse frequency and type of power cable between motor and converter – the permissible power cable length can be less than150 m.

Select motor encoder P130

This parameter is automatically initialized with the value 1 (= two-pole resolver) when sensor board SBR1 or SBR2 is used. The setting must be changed for multi-pole resolvers.

Select Motor Encoder		
Par.	Value	Meaning
P130	**1**	2-pole resolver as motor encoder
P130	**2**	Resolver with motor pole pair number as motor encoder

Angle offset P132

The absolute position of the resolver must match the mechanical position of the flow axis. The alignment of the resolver is performed at the factory and must not be modified. If you use a third-party motor with a different alignment specification to a SIEMENS motor, the displacement angle can be corrected with parameter P132.

Pulse encoder simulation P134

If you use the SBR2 board, pulse encoder simulation is available on the front connector. The number of pulses/revolution is configurable. Depending on the parameter setting, the simulation produces 512 or 1024 pulses plus one zero pulse per revolution. This applies to the two-pole resolver. Resolvers with larger numbers of poles output a correspondingly higher number of pulses per revolution. The signals are output as differential signals in pulse tracks displaced by 90° (RS422) and are **not** potentially isolated.

Pulse Encoder Simulation		
Par.	Value	Meaning
P134	**0**	512 pulses per revolution
P134	**1**	1024 pulses per revolution

Standard encoder

The two-pole resolver is the standard encoder.

9.4.5 Optical Sin/Cos Encoder [240]

Principle

The resolution with an ERN1387 optical sin/cos encoder is represented by the positional information of 2^{24} = 16 777 216 graduations per encoder revolution: for each 2048 sine and cosine periods per revolution this yields a "rough digital resolution" of 8096 steps per motor revolution after "pulse quadrupling" (evaluation of the zero crossings). Each quarter period is resolved again into 2048 steps through the fine analog amplitude evaluation of the sine/cosine signals.

The relative accuracy (repeatability) that can be achieved under practical conditions is approximately 4 000 000 steps per revolution. The system accomplishes high-precision position sensing with an absolute accuracy of approximately 100 000...1 000 000 steps per encoder revolution.

The sin/cos encoder uses a special sine/cosine track, each with one period per revolution, to return the absolute position of the rotor from 0° to 360°. Initial rough acquisition of the rotor position is undertaken when the power is switched on, when moving out of the drive position (P60 = 5) or when fault F051 is acknowledged. This initial value is corrected the first time the zero pulse is crossed, after which the full precision of the encoder is available to the user.

The signals of the optical sin/cos encoder are evaluated on an SBM or SBM2 sensor board [240]. In addition to the signal processing circuits, the sensor board is equipped with the encoder power supply.
The SBM2 sensor board with extended functionality has meanwhile taken the place of the SBM sensor board.

Encoder power supply

The SBM board can provide both 5 V and 15 V as the encoder power supply. The correct supply voltage for the encoder must be set on the board. The encoder might sustain damage if the supply is incorrectly set. The standard ERN 1387 encoder operates on 5 V.

SBM board

The power supply is set using two hook switches on the SBM sensor board. An incorrect setting can result in damage to the encoder.

Both switches open ⇒ 5 V encoder supply

Both switches closed ⇒ 15 V encoder supply

SBM2 board

The encoder supply voltage is set directly in volts via parameter P145 on the SBM2 board. The value in Index 1 defines the supply voltage for the motor encoder, while that in Index 2 defines the supply voltage for the external encoder. The maximum supply voltage for Compact units is 15 V and for Compact Plus units 24 V.
Setting examples:

Encoder supply		
Par.	Value	
P145	**5**	5 V supply voltage for encoder
P145	**15**	15 V supply voltage for encoder

Cable length

The maximum cable length for the sin/cos encoder is 100 m.

NOTE

An ERN1387 encoder as a motor encoder requires a 6FX_002-2AC31-____ connecting cable.

CAUTION

The encoder cable must not be pulled out or inserted in a live state as otherwise the encoder may be destroyed!

Select motor encoder P130

The automatic board identification system automatically initializes the parameter for the sin/cos encoder.

Select Motor Encoder		
Par.	Value	
P130	**3**	Sin/cos encoder as motor encoder

Number of lines P136

The resolution of the encoder must be stored in parameter P136. The resolution is entered in increments per revolution. The input is graduated as 2P136.

Standard encoder

The ERN 1387 sin/cos encoder manufactured by Heidenhain is used as the standard encoder. The following parameters are initialized for this encoder:

Number of Lines for Sin/Cos Encoder ERN1387				
Par.	Value	Signal Periods/ Revolution	Incr./ Revolution	
P136	11	2^{11} = 2048	8192	Encoder resolution

For induction machines1PH4, 1PH7(=1PA6) and 1PL6, the ERN1381 type of encoder made by the Heidenhain company is frequently used. The ERN1381 does not have any C/D tracks for detecting the initial position. P130 = 7 must be used for this type of encoder.

Encoder selection P130

Par.	Value	
P130	7	Encoder without C/D track

The absolute initial position is not set in the case of encoders without C/D track. These encoders can be used with induction machines only. The position is corrected by a zero pulse where applicable.

9.4.6 Multiturn Encoder Evaluation [260, 270]

CAUTION

The encoder cable must not be pulled out or inserted in a live state as otherwise the encoder may be destroyed!

Principle

The multiturn encoder is an absolute encoder. It detects the number of revolutions, in addition to the rotor position from 0° to 360°. On initialization, the start position is transmitted to the converter using a serial protocol. The revolution information is always stored on the encoder, i.e. even after a power failure, wire break or component replacement. Referencing is therefore not required.

In addition to the signal processing circuits, the sensor board is equipped with the encoder power supply.

Encoder supply voltage

The supply voltage for the encoder is set by the same method used for the sin/cos encoder.

Cable length P149.01, P149.07

The serial protocol of the coded rotary encoder is implemented as a synchronous protocol. Communication takes place according to the master (converter)/slave principle. The cable length is limited by the transmission times from converter to encoder and back.

Possible baud rate depending on the cable length:

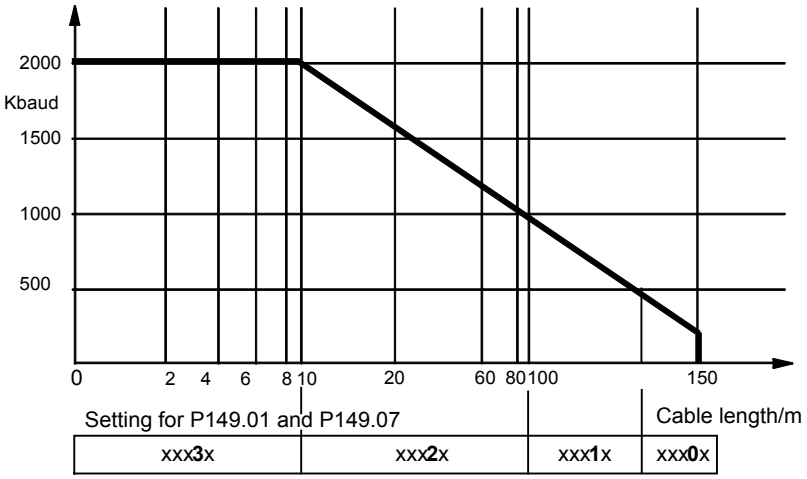

Fig. 9-11 Possible baud rate depending on the cable length

NOTE

The EQN1325, ECN1313 and EQI1325 encoders require a 6FX_002-2EQ10-____ connecting cable.

NOTE

Not all measuring system manufacturers support baud rates up to 2 Mbaud. The serial protocol for the motor encoder is only required for initialization and redundancy monitoring. These functions are non-time-critical. A baud rate of 100 kHz (standard setting) is recommended for immunity to interference.

Encoder types

Only encoders which generate incremental tracks, in addition to transmitting the position using the serial protocol, are suitable as motor encoders. The sensor board supports the serial **SSI** and **EnDat** protocols.
Recommended coded rotary encoders:

Coded Rotary Encoder				
Name	Res./ Rev.	Rev.	Protocol	
EQN 1325	8192	4096	EnDat	Multiturn Standard
ECN1 313	8192	-	EnDat	Singleturn
EQI 1325	128	4096	EnDat	Multiturn

Select motor encoder P130

The sensor boards for sin/cos encoders and multiturn encoders are identical. For this reason, the encoder type must be entered specifically in spite of the automatic board identification (the default setting is sin/cos encoder).

Select Motor Encoder		
	Value	
P130	**4**	Coded rotary encoder as motor encoder

Default setting P147.1

Parameter **P147.1** initializes the necessary settings. If one of the listed standard encoders is used, no further settings are necessary.

Select Multiturn				
P147.1	Name	Res./ Rev.	Rev.	
1	EQN1325	8192	4096	
2	ECN1313	8192	-	Singleturn
3	SSI 25	8192	4096	
4	SSI 21	8192	256	
5	SSI 13	8192	-	Singleturn
6	EnDat	auto	auto	
7	EQI1325	128	4096	

Number of lines P148

The resolution of the encoder must be stored in parameter P148. The signal periods per revolution are set for Heidenhain encoders with EnDat (see the nameplate). The measuring steps per revolution are specified for SSI encoders. Consequently, you need a different setting for SSI and EnDat encoders with the same resolution. The parameter is input as powers of 2.
This parameter is initialized when P147 ≠ 0.

Example:

Number of Lines for Multiturn EnDat EQN1325				
	Setting		Resolution/ Revolution	
P148.1	11	2^{11} = 2048	8192	Signal periods/ revolution **EnDat** encoder
P148.2	12	2^{12} = 4096	-	Number of revolutions that can be distinguished
Number of Lines for Multiturn SSI				
	Setting		Resolution/ Revolution	
P148.1	13	2^{13} = 8192	8192	Measuring steps/ revolution **SSI** encoder
P148.2	12	2^{12} = 4096	-	Number of revolutions that can be distinguished

Configuration of protocol P149

The configuration of the serial protocol is stored in parameter P149. It is possible to use additional functions with EnDat protocols, e.g. for saving a zero offset or storing customer parameters on the encoder. It is also possible to configure SSI protocols that differ from the standard configuration, e.g. with parity bit or binary coding.
This parameter is initialized when P147 ≠ 0.

P149.1				SSI/EnDat Default Setting
T	H	Z	E	**Th**ousands, **H**undreds, **T**ens, **O**nes
X	X	X	**0**	**SSI** Protocol
X	X	X	**1**	**EnDat** Protocol
X	X	**0**	X	Baud rate **100 kHz**
X	X	**1**	X	Baud rate **500 kHz**
X	X	**2**	X	Baud rate **1000 kHz**
X	X	**3**	X	Baud rate **2000 kHz**
X	**0**	X	X	Serial protocol for initialization only
X	**1**	X	X	Serial protocol corrects pulse counter
0	X	X	X	Rotary encoder
1	X	X	X	Linear scale **Disabled for motor encoders**

P149.2				EnDat Configuration
T	H	Z	E	**Th**ousands, **H**undreds, **T**ens, **O**nes
X	X	**Z**	**Z**	Number of data bits **(EnDat)** (e.g. 25 for EQN 1325)
X	**0**	X	X	Read measured values **(EnDat)**
X	**3**	0	X	Write parameters into encoder EEPROM **(EnDat)** (address in **P149.4** and **P149.5**; value in **P149.6**)
X	**4**	X	X	Read parameters from encoder EEPROM **(EnDat)** (address in **P149.4** and **P149.5**; value in **P149.6**)
X	**A**	X	X	Self-startup (EnDat) (protocol length; read encoder type and number of lines from encoder EEPROM and assign **P148; P149** accordingly => only if EnDat protocol selected in **P149.1**!)
X	**B**	X	X	Save zero offset on encoder **(EnDat)** (save the zero offset from **P146.1** in the encoder EEPROM and clear **P146.1**)

P149.3				SSI Configuration
T	H	Z	E	**Th**ousands, **H**undreds, **T**ens, **O**nes
X	X	X	**Z**	Number of non-significant leading zero bits in the protocol **(SSI)**
X	X	**0**	X	Data of encoder in binary format **(SSI)**
X	X	**1**	X	Gray-coded encoder data **(SSI)**
X	**0**	X	X	No alarm bit **(SSI)**
X	**Z**	X	X	Position of alarm bit after last protocol bit **(SSI)**
0	X	X	X	No parity bit **(SSI)**
1	X	X	X	Parity check (last protocol bit) **(SSI)**

NOTE

In addition to the serial protocol, the motor encoder must also have a 1 Vpp output, since the motor controller requires the motor position in real time. The serial protocol can only achieve very low sampling rates and is thus not suitable at present for motor control. The standard encoder is the Heidenhain EQN1325 with the EnDat protocol.

P149.4				**EnDat MRS-Code (Memory Range Select)**
T	H	Z	E	**Th**ousands, **H**undreds, **T**ens, **O**nes
Z	**Z**	**Z**	**Z**	**EnDat** Memory Range Select - address selection for memory accesses to the encoder EEPROM in conformity with the EnDat specification (hexadecimal)
P149.5				**EnDat Address**
T	H	Z	E	**Th**ousands, **H**undreds, **T**ens, **O**nes
Z	**Z**	**Z**	**Z**	**EnDat** address in specified memory range in conformity with **EnDat** specification (hexadecimal)
P149.6				**EnDat Data**
E	H	Z	E	**Th**ousands, **H**undreds, **T**ens, **O**nes
Z	**Z**	**Z**	**Z**	**EnDat** data at address defined in **P149.4** and **P149.5**, if read or write data was selected in **P149.2** (hexadecimal) in conformity with **EnDat** specification

Encoder monitoring

The pulse inhibits are compared with the serial protocol of the encoder with P149.1 = x1xx and corrected if necessary. In the event of frequent deviations a fault message is tripped.

The monitoring time slot can be set in U950.19.

	EnDat Addresses (Selection in Conformity with EnDat Specification V2.0)			
Parameter of Measuring System Manufacturer	**Linear**	**Rot.**	**MRS-Code**	**Add.**
Operating state			B9	0 - 3
Masks			A1	4 - 7
Version of EnDat Interface			A1	8
Memory allocation for OEM parameters			A1	9 - A
Memory allocation for offsets			A1	B - C
Number of cycles for transmission of position			A1	D
Measuring system type			A1	E
Signal period or signal periods/rev.	nm		A1	F
Signal period or signal periods/rev.	nm		A3	0
Distinguishable revolutions			A3	1
(Basic) distance of reference marker	mm		A3	2
Position of first reference marker	mm		A3	3
Measuring step/measuring steps/rev. for protocol	nm		A3	4 - 6
Zero offset of measuring system manufacturer	per		A3	6 - 7
Identification number			A3	8 - A
Serial number			A3	B - D
Direction of rotation			A3	E
Startup diagnostics			A3	F
Maximum velocity/speed	m/min	min^{-1}	A5	0
Accuracy in range I	LSB	LSB	A5	1
Accuracy in range II	LSB	LSB		2
Alarm support			A5	3
Warning support			A5	4
CHECKSUM			A5	0F
Operating Parameters	**Linear**	**Rot.**	**MRS-Code**	**Add.**
Zero offset in signal periods			A7	0 - 1
OEM Parameters	**Linear**	**Rot.**	**MRS-Code**	**Add.**
User-assignable			A9. AD	0 - F
Customer Parameters	**Linear**	**Rot.**	**MRS-Code**	**Add.**
User-assignable			AF	0 - F
Offset Values, Not Yet Defined	**Linear**	**Rot.**	**MRS-Code**	
			B1..B7	0 - F

Abbreviations:

add. = address
linear = linear scale
rev. = revolution
rot. = rotary encoder

NOTE

The zero offset for the motor encoder must **only** be displaced using parameter **P149.2**! Otherwise serious damage to the motor control system can result!

Zero offset for encoder P146.1

The zero offset for the motor encoder can be entered in parameter **P146.1**. The zero offset is entered here in revolutions, since the rotor position is not otherwise allowed to be displaced in case of damage to the control system. With **EnDat** encoders, it is possible to copy this offset into the encoder EEPROM (see **P149.2**).

P146.1				Zero Offset
T	H	Z	E	**Th**ousands, **H**undreds, **T**ens, **O**nes
Z	**Z**	**Z**	**Z**	Zero offset in revolutions (decimal)

Setting the zero offset and saving to EEPROM

In certain applications, it is necessary to save the zero offset directly on the encoder (in order to modify the position overflow).

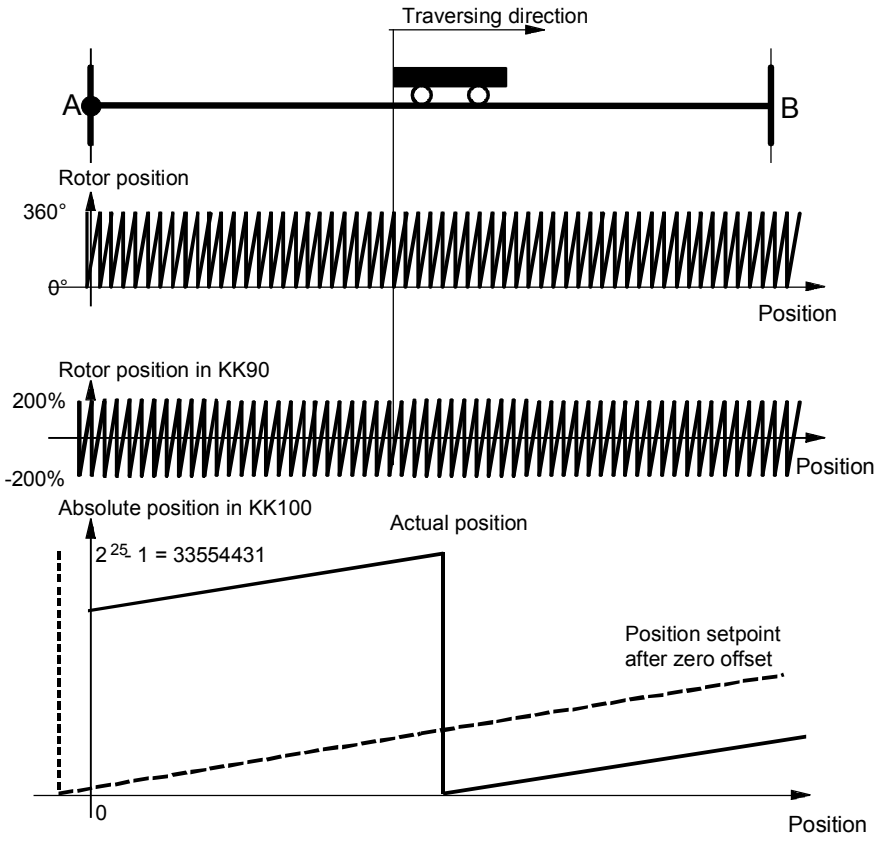

Fig. 9-12

Example for setting the offset on EQN encoders:

Encoder:	EQN1325
Parameter setting:	Standard (P147.1 = 1)
KK100 at point A is	27962026
Setpoint at point A	10 revolutions

How many increments per revolution are generated by the encoder?

Encoder EQN1325 generates 2048 signal periods per revolution. The maximum resolution is calculated with quadruple evaluation for position sensing ⇒ this yields 2 to the power of (number of lines + 2) increments per revolution.

2^{11+2} inc / rev = 8192 inc / rev

By how many increments must the absolute position be corrected?

$$\text{Delta} = 27962026\ \text{inc} - 10\ \text{rev} \times 8192\ \frac{\text{inc}}{\text{rev}} = 27880106\ \text{inc}$$

How many revolutions does that represent and what is the remainder?

$$\text{Delta\_rev} = \frac{27880106}{8192}\ \text{rev} = 3403\ \text{rev}$$

$$\text{Delta\_rem} = (27880106\ \text{inc} - 8192\ \frac{\text{inc}}{\text{rev}} \times \text{Delta\_rev}) = 2730\ \text{inc}$$

Set Zero Offset	
Revolutions P146.1	-3403

The setting is added on allowing for the overflows of the representable value range. The value range is between "zero" and the maximum encoder resolution even after a zero offset is set.
When **EnDat** encoders are used, the zero offset can be transferred from parameter **P146.1** into the encoder EEPROM.

Save Zero Offset in Encoder EEPROM		
Par.	Setting	Description
P60	5	Switch to drive settings
P149.2	B25	Save zero offset on encoder
P60	1	Return to ready for operation

NOTE

The offset setting in **P146.1** is cleared and stored on the encoder. It is important that the correct number of lines is specified in **P148.1** ⇒ if you do not use a default encoder, we recommend that you call up the EnDat self-startup function before saving the zero offset (**P149.2** xAxx and **P149.1** xxx1)

WARNING

If you store an offset in the encoder while an incorrect number of pulses per revolution is being entered in P148.1 the motor encoder will become incorrectly oriented and the motor may overspeed.

The fine offset within one revolution can be set with parameter P184 [330.7]. If the technology is used, the fine offset must be defined in **machine data MD10** [815.4].

9.4.7 Pulse Encoder Evaluation [250, 255]

Principle

The pulse encoder generates two pulse tracks displaced by 90° and one zero pulse per revolution. Because of the operating principle of the pulse encoder, it only reproduces changes in position. In order to determine the absolute position from 0° to 360°, it is necessary to reference the system (e.g. by crossing the zero pulse). These characteristics mean that the pulse encoder can only be configured for asynchronous machines.

Evaluation of the pulse encoder is handled by a sensor board (SBP) [250, 255].

Cable length

The permissible cable length depends on the encoder selected. Various charts are produced according to the interface. Bipolar encoders allow the longest cables to be used. Unipolar encoders restrict the length of cable which may be used. In the case of HTL encoders, the maximum output current of the encoder has a major impact on the transmission distance that can be achieved. The higher the maximum output current, the greater the distance possible (the encoder must reverse the cable capacitance charge on every pulse).
With the **SBP** sensor board, the terminating resistors can also be used for HTL signals (this is a "dynamic cable terminator" which keeps power loss to a minimum).

In the chart below, the maximum permissible cable lengths for TTL/RS422 encoders are plotted against the pulse frequency:

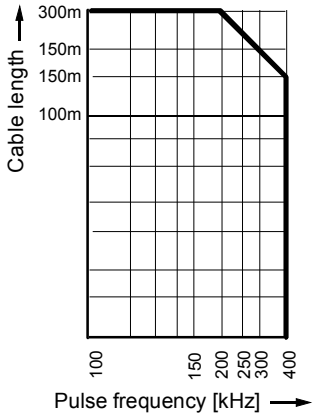

Cable length for pulse encoders with TTL/RS422 signals

Fig. 9-13 Maximum Cable Lengths for Pulse Encoders with TTL/RS422 Signals

Select motor encoder P130

Slot C is the preferred location for installation of a pulse encoder used as a motor encoder. If the encoder is not installed in slot C, the parameter should be configured as shown below:

Select Motor Encoder		
Par.	Value	
P130	**5**	Pulse encoder in slot C as motor encoder
P130	**6**	Pulse encoder not in slot C as motor encoder

Number of lines P151

The resolution of the encoder is determined by its number of lines. The number of lines per revolution is entered in parameter **P151**. This parameter appears on the product nameplate and in the corresponding data sheet.
Example for a pulse encoder with 2048 pulses per revolution:

Select Motor Encoder			
Par.	Number of Lines	Increments/ Revolution	
P151.1	**2048**	8192	Pulses per revolution for motor encoder

Configuration P150

The signal level of the pulse encoder can be modified according to the following table.

P150				Pulse Encoder Configuration		
Th	H	T	O	Low Level	High Level	Meaning
						Signal Level, A/B Track
X	X	X	**0**	< 3 V	> 8 V	HTL unipolar (inverted inputs to ground)
X	X	X	**1**	< 1 V	> 4 V	TTL (inverted inputs to ground)
X	X	X	**2**	< -3 V	> 3 V	HTL differential signal
X	X	X	**3**	< -0,2 V	> 0,2 V	TTL/RS422 differential
X	X		X			**Signal Level, Zero Track**
X	X	**0**	X	< 3 V	> 8 V	HTL unipolar (inverted inputs to ground)
X	X	**1**	X	< 1 V	> 4 V	TTL (inverted inputs to ground)
X	X	**2**	X	< -3 V	> 3 V	HTL differential signal
X	X	**3**	X	< -0,2 V	> 0,2 V	TTL/RS422 differential
X	**0**	X	X			5 V supply for encoder
X	**1**	X	X			15 V supply for encoder

NOTE

Incorrect setting of the power supply parameters can result in damage to the encoder.

Four switches are installed on the SBP sensor board. Switches 1 to 3 activate the bus terminating resistors (the sensor board is supplied with the switches closed), while switch 4 deactivates the power supply in the closed state (the sensor board is supplied with the switch open).

9.4.8 Position Sensing System for Motor Encoder [330]

Overview

The position sensing system for the motor encoder is shown in [330]. The motor encoder generates a rotor position signal KK090 "Theta(mech)" [500] with a resolution of 2^{32} increments per encoder revolution, from which the position sensing system [330] generates the actual position value KK120.

In the factory setting (32 - 12 = 20 shift steps), the shift division block [330.4] generates a raw positional value with 4096 increments per encoder revolution, which is suitable for most applications using a resolver. The shift division is used to ensure optimum resolution of the actual position value and to prevent the numeric range of 32 bits from being exceeded during extremely long traversing movements (or the range from -999 999 999 to +999 999 999 when using technology option F01; see [815.4]).

After shift division, the actual position value is normalized by applying the actual value weighting factor AVWF such that an increment at the actual position output KK120 matches the length unit LU in which the target positions are to be specified. You will find specifications for setting the AVWF below and in "Defining the Actual Value Weighting Factor" in the section entitled "Commissioning the Technology".

The position sensing system includes the following additional functions:

- Position correction, which can be used to trap overflows on rotary axes and roll feeds (is activated accordingly by the technology [815.5 and 836.8]
- Basic control system for homing with incremental encoders (resolvers, sin/cos encoders, pulse encoders)
- Position memory for storing the present actual position if one of the two interrupt-capable digital inputs on the converter terminal strip is actuated by a signal edge (terminals X101.6 and X101.7). Printing index signals from optical sensors or other synchronization signals can be connected to the digital inputs. This measured position is processed subsequently on the technology [815 and 836].

Principle

Resolvers and sin/cos encoders register the absolute rotor position within one revolution from 0º to 360º. The number of motor revolutions is counted in addition to this rotor position, in order to measure the position. If a multiturn encoder is used, the number of revolutions is determined during initialization. The sum of the motor revolutions and the rotor position determines the overall position. The transition from encoder increments to a physical unit such as µm or degrees is performed by applying the actual value weighting factor (AVWF). The physical unit of position is referred to below as LU (Length Unit).

The position sensing system operates with a data width of 32 bits and thus has a value range of:

	Minimum Value	**Maximum Value**
	-2^{31}	$+2^{31}-1$
Increments * AVWF	-2.147.483.648	2.147.483.647
Length units [LU]	-2.147.483.648	2.147.483.647
Example: 1 LU = 1 µm	-2.147.483.648 µm	2.147.483.647 µm

Please note that the value range is limited to ± 999 999 999 when technology option F01 is used [815.4].

Enable position sensing/encoder type P183

A value of 0 in the ones digit of parameter P183 disables position sensing. The function of the position sensing system is inhibited and all output connectors have the value zero.

P183				**Meaning**
Th	H	T	O	**Th**ousands, **H**undreds, **T**ens, **O**nes
X	X	X	**0**	Position sensing disabled ⇒ no actual position calculation
X	X	X	**1**	Enable position sensing with resolver, pulse encoder or encoder
X	X	X	**2**	Enable position sensing with multiturn encoder

x = not relevant for enabling position sensing.

NOTE

With a two-pole resolver or encoder, the output of the position sensing system is set to the current rotor position when the unit is powered up. The position sensing system thus detects the absolute position within one revolution of the motor.
If a multiturn encoder is used, the number of revolutions is also detected.

Position resolution P171

Parameter P171 defines the resolution of the encoder system used to generate the overall position. The value should not be greater than the practical maximum resolution of the encoder. It is important that the complete traversing range be capable of representation in a 32-bit double word. If this is not the case, the resolution must be reduced by shift division.

The table below provides an overview of practical encoder resolutions:

Encoder system	Practical max. resolution [increments/revolution]
Resolver	$2^{12} = 4096$
Encoder	$2^{24} = 16777216$
Multiturn encoder	$2^{20} = 1048576$

The resolution in P171 must be selected such that the positioning range can be represented in a 32-bit double word.

The default of 4096 increments/revolution is adequate for most positioning tasks.

Actual value weighting factor P169/P170 P180.01 / 02

The actual value weighting factor (AVWF) is used to transpose the encoder increments into a physical unit. The unit can be defined freely, and is referred to as the LU (Length Unit). LU is the length unit in which the user prefers to specify his target positions. The weighting factor specifies the traversing distance in the "number of length units LU" corresponding to one position increment (after shift division) – including all gear ratios, roll feed diameter, etc.

The preferred reference for the length unit LU in association with positioning tasks is µm for linear axes and 0.001 degrees for rotary axes.

Recommended Position Normalization for Positioning Axes		
Recommended for linear axis: 1 LU = 1 µm	AVWF =	traversing distance in µm per increment [LU/inc]
Recommended for rotary axis: 1 LU = 0.001°	AVWF =	traversing distance in 1/1000ths of one degree per increment [LU/inc]

The actual value weighting factor (AVWF) can be input by 2 different methods:

a) Directly as a decimal number with 3 integer places and 8 decimal places

b) As a fraction with a 20 bit numerator and a 20 bit denominator

Variant (b) will need to be used if the AVWF cannot be represented by 8 decimal places and where cumulative errors have to be avoided. This applies in the case of rotary axes. The actual value weighting factor (AVWF) must therefore be specified as a fraction for rotary axes if it cannot be represented by 8 decimal places.

Example:

The position sensing motor encoder is parameterized with P171=18 such that one revolution of the rotary axis equals 2^{18} increments per revolution. This must correspond to numerical value 360000.

The actual value weighting factor (AVWF) is therefore as follows:

$$\text{AVWF} = \frac{360000}{2^{18}} = 1.373291015625$$

The calculation produces a number with 12 decimal places which can only be accurately represented by specifying the factor as a fraction.

AVWF factor with integer/decimal places

The actual value weighting factor has 3 integer places and 8 decimal places in two separate components.

Actual Value Weighting Factor	
Integer places 3-digit P169	Decimal places 8-digit P170
0 to 999	0 to 99999999

NOTE

If you want to work in encoder increments instead of physical units, the actual value weighting factor (AVWF) should be set to 1.0. This is recommended, for example, for pure synchronization axes.

Example: Determining the AVWF for a linear axis

The following example calculates the actual value weighting factor (AVWF) for an application in which a motor drives a toothed belt via a gearbox and a drive roller.

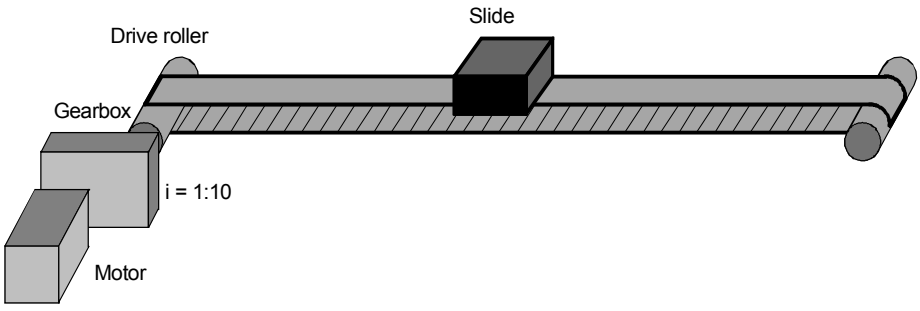

Fig. 9-14

CAUTION

After the AVWF factor has been charnged, the converter has to be re-initialized (switch the unit off and on again).

Encoder:	Resolver (P171=12 ≅ 4096 increments/revolution)
Gear ratio:	1:10
Diameter of drive roller:	300 mm

How many µm does the slide travel in one encoder increment?
AVWF = number of LUs per position increment

$$\frac{AVWF}{\left[\frac{\mu m}{inc}\right]} = \frac{1}{Gear\,ratio} \times Diameter \times \pi \times \frac{1}{inc\,/\,revolution}$$

$$\frac{AVWF}{\left[\frac{\mu m}{inc}\right]} = \frac{1}{i} \times \left(\pi \times \frac{D}{[\mu m]}\right) \times \frac{1}{\frac{2^{P171}}{[inc]}}$$

$$\frac{AVWF}{\left[\frac{\mu m}{inc}\right]} = \frac{1}{10} \times 300000\,\mu m \times \pi \times \frac{1}{4096\,inc}$$

$$\frac{AVWF}{\left[\frac{\mu m}{inc}\right]} = 23{,}00971181828\,\mu m$$

Resulting Actual Value Weighting Factor (AVWF)	
Integer places 3-digit P169	Decimal places 8-digit P170
23	(00)971181

NOTE

Trailing zeroes must be entered with the decimal place component; leading zeroes can be omitted.
Examples:
AVWF = 12.3 ⇨ P169 = 12, P170 = 30000000
AVWF = 12.00000003 ⇨ P169 = 12, P170 = 3

AVWF as numerator/ denominator

When the actual value weighting factor (AVWF) is specified as a numerator / denominator, the length units LU are entered in the numerator and the encoder increments in the denominator.
Example:
A rotary axis is driven via a gear unit with a gear ratio of 1:3. The actual position sensing function is parameterized such that 2^{16} increments correspond to one motor revolution. One revolution on the load side must equal 360000LU.

$$AVWF = \frac{360000}{2^{16} \cdot 3} = \frac{360000}{196608}$$

Direction of rotation bit P595

The direction of rotation bit (right/left) can be used to invert the direction of rotation of the motor.

Direction of Rotation Bit	
P595	Meaning
0	Right (Clockwise looking towards the output)
1	Left (Counterclockwise looking towards the output)

With resolvers, encoders and pulse encoders, the leading sign and counting direction of the position are inverted. With an absolute encoder (Multiturn or Singleturn encoder), the maximum traversing range is also added.

Example:
Qualitative progression of the absolute position with voltage initialization at the zero point of the encoder and for clockwise rotation looking towards the output.

Clockwise (**P595** = 0) ⇒ no difference between encoder and absolute encoder

Counterclockwise (**P595** = 1) ⇒ different curves for encoder and absolute encoder

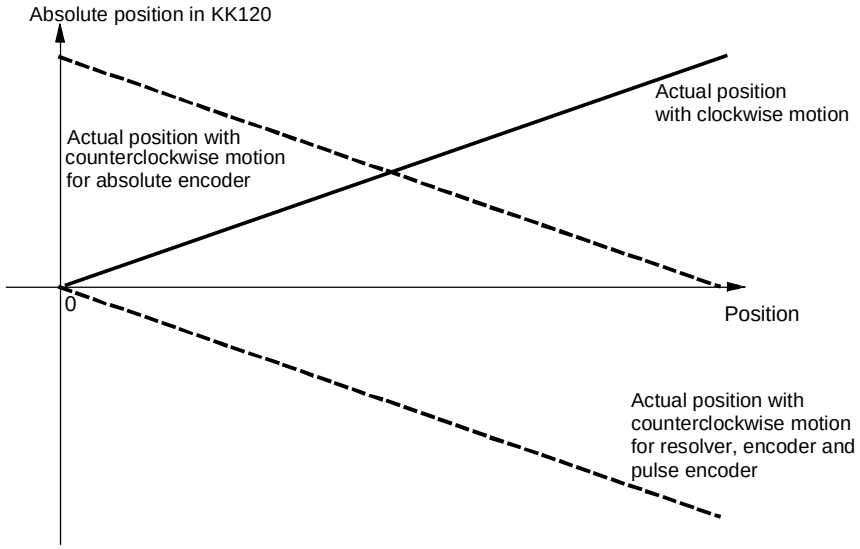

Fig. 9-15

Position correction P174/P175

The position correction is used to correct the actual position by a certain value. [330.5], [335.5]

The position correction is used mainly for:

- Rotary axis operation with angular synchronization [836.7] and positioning [815.5]. The correction is performed with an overflow from 360° to 0°.
- The tool offset during positioning

The control signals for adding and subtracting the position correction operate as follows:

Position correction:	Actual position
⇨ Added	Actual position = actual position + pos. correction
⇨ Subtracted	Actual position = actual position - pos. correction

The position correction value can be positive or negative.

The time chart below illustrates the signal sequence during position correction.

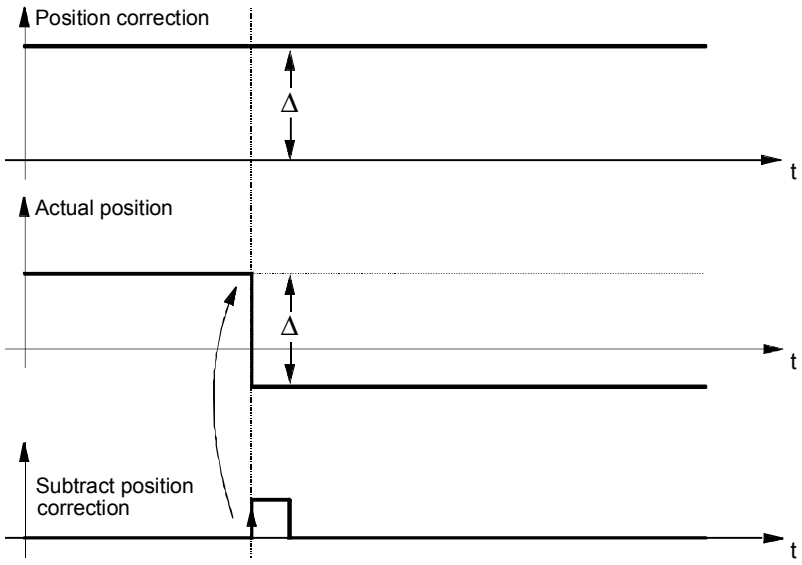

Fig. 9-16

Homing P183

The motor encoder indicates the absolute position within one motor revolution. If the motor covers more than one revolution during a positioning movement, the position sensing system must be referenced with an external rough pulse signal.

NOTE

If a multi-pole resolver has to be referenced, the resolver angle KK96 (available from software version1.6) has to be connected up to the motor encoder position detection instead of the rotor position KK90 (P182=96). If KK90 were used, the zero pulse would always be detected in the pole pitch in which the resolver happens to be positioned when switched on.
In one mechanical motor revolution, the resolver angle makes the same number of revolutions as the number of pole pairs of the resolver. The number of pole pairs of the resolver must therefore be taken into account in the denominator of the AVWF factor (P180.2).

Position detection uses the zero passage of the connected position angle as a substitute for a zero pulse. It thus detects the same number of zero pulses as the resolver's number of pole pairs. The desired zero pulse is selected with the rough pulse.

The following table provides an overview of the homing modes:

Homing Mode	
To right of BERO P183 = xx11	The home position is the first rotor zero position after the negative edge of the rough pulse. The traversing direction must be positive.
To left of BERO P183 = xx21	The home position is the first rotor zero position after the negative edge of the rough pulse. The traversing direction must be negative

NOTE

When using homing mode in technology option F01 or in SIMATIC M7, the machine data MD5 setting must be identical to P183 [821.3].

Signal sequence for homing P177

A positive edge on the "enable homing" control signal enables the homing logic for one cycle. When the home position is detected, the position is set to the set value and the "home position detected" checkback signal is output [330.7 and 335.7]. The checkback signal remains active until the "enable homing" control signal is canceled again. The time chart below illustrates the sequence.

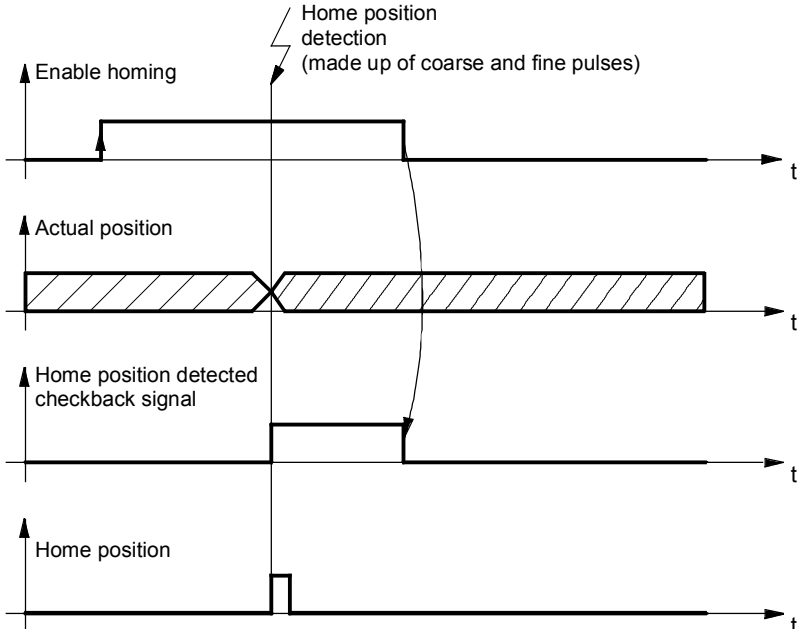

Fig. 9-17

Homing mode to right of proximity switch (BERO)

A rough pulse (proximity switch) signal is required for this homing mode. The home position is the first rotor zero position after the negative edge at the rough pulse input for a positive traversing direction (direction A → B).

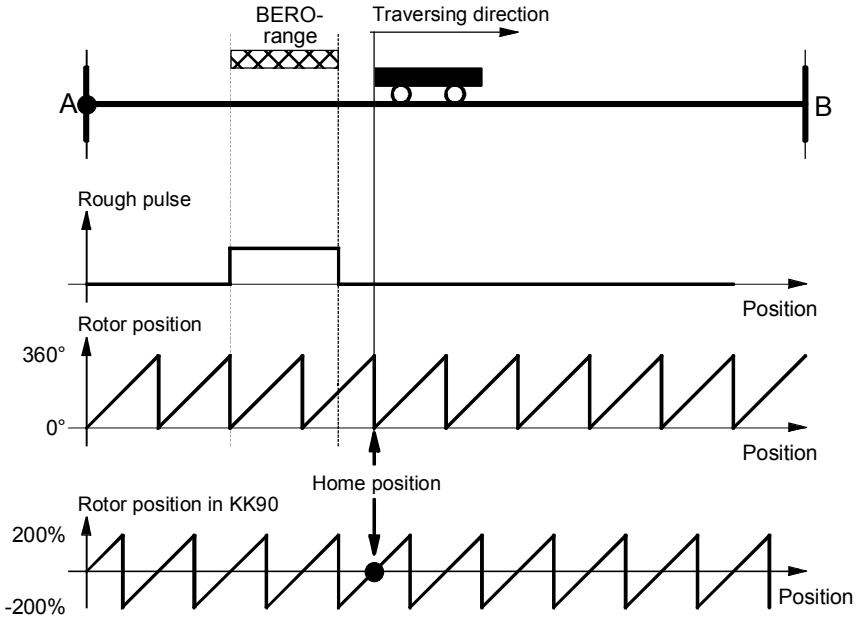

Fig. 9-18

Homing mode to left of proximity switch (BERO)

A rough pulse (proximity switch) signal is required for this homing mode. The home position is the first rotor zero position after the negative edge at the rough pulse input for a negative traversing direction (direction B → A).

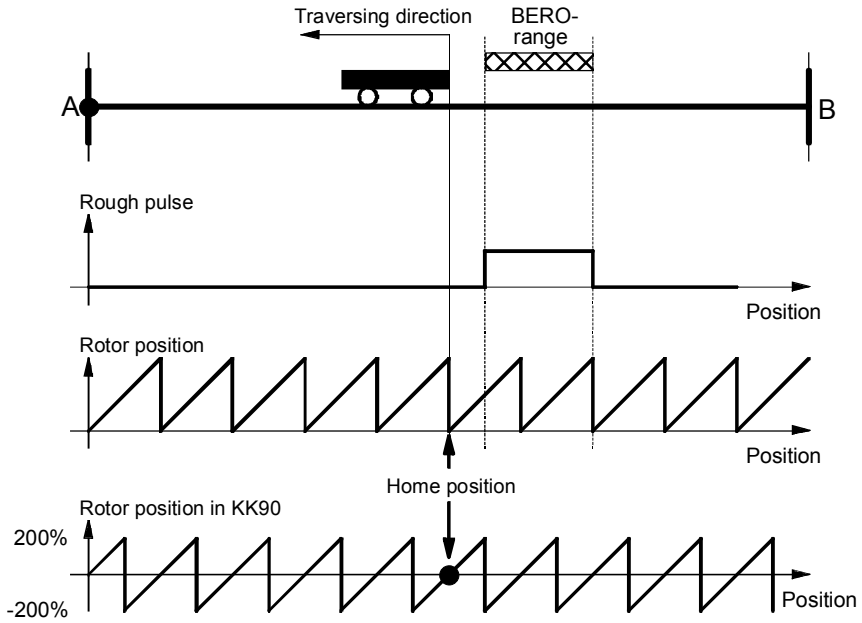

Fig. 9-19

Proximity switch alignment

Since the rough pulse is read in via a digital input, the signal is evaluated in the sampling time of the digital inputs. If the negative edge of the rough pulse is located directly above the rotor zero position, the detection of the home position may be incorrect, because the signal is detected with the inaccuracy of a sampling period.

Example:

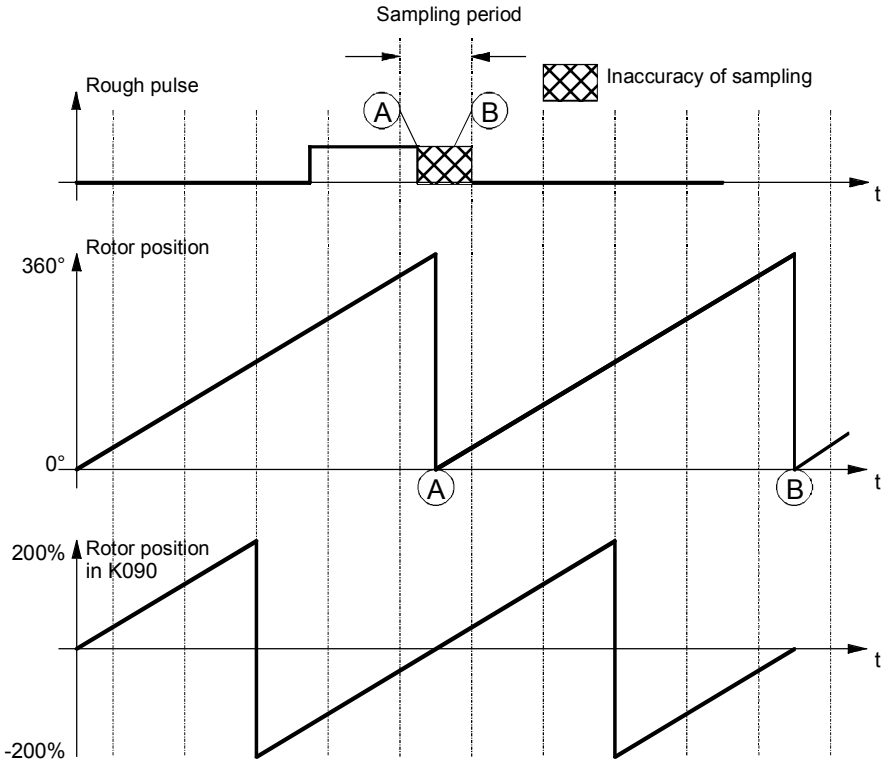

Fig. 9-20

In the configuration shown in the graphic, the negative edge of the rough signal can be detected in front of the rotor zero position (sample A), resulting in the detection of the home position at point A. If the negative edge is not detected until after the rotor zero position (sample B), the home position is located at point B.

To prevent incorrect detection of the home position, the proximity switch must be aligned such that the falling edge does not coincide with the rotor zero, but occurs in the most central position possible between two rotor zero crossings. The rotor zero position can be monitored in KK090 (e.g. using display parameter r033.1, if P032.1 = 90 is set [30.2]).

Rotor position offset P188 / r189

An alternative to mechanical alignment of the proximity switch is to use parameter P188 to define an offset to the measured rotor position. This has the same effect as mechanical alignment of the proximity switch. The offset to be entered in P188 is determined as follows:

Step 1: Perform a homing procedure. If the home position is found, the rotor position measured at the negative edge of the rough pulse is output in parameter r189.

Step 2: The measured value in r189 must be less than -100 % or greater than +100 %. If the value is outside this range, an offset must be specified for the rotor position. The offset value is calculated as follows:

Measured rotor position r189	**Offset in P188**
Positive, >100 %	No correction necessary
Positive, <100 %	P188 = 200 % - r189 see example in Fig. 9-21 r189 = 20 % P188 = 200 % - 20 % = 180 %
Negative, >-100 %	P188 = -200 % - r189 Example: r189 = -80 % P188 = -200 % - (-80 %) = -120 %
Negative, <-100 %	No correction necessary

The graphic below illustrates the procedure.

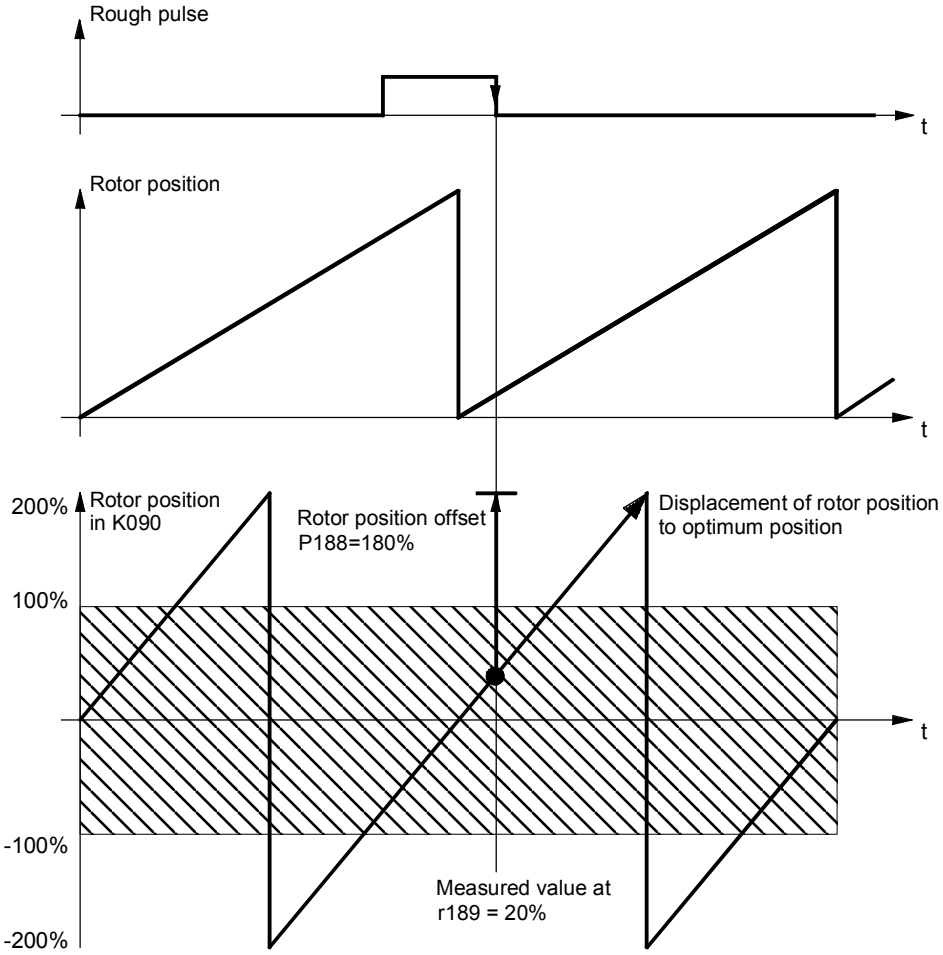
Rough pulse
t
Rotor position
t
200%
Rotor position
in K090
Rotor position offset
P188=180%
Displacement of rotor position
to optimum position
100%
t
-100%
Measured value at
r189 = 20%
-200%

Fig. 9-21

9.4.9 Using absolute encoders for positioning of motors with load-side gearing and rotary axis

Basic problems

This chapter describes the procedure required when **mechanical gearing** is interposed between a **rotary axis** and the motor and position control is to be performed by an **absolute value encoder** located on the motor. In this case, an additional function block is required which is shown in function diagram 327 for the motor encoder and function diagram 333 for the external encoder.

Absolute encoders capable of counting a definite number of encoder revolutions (such as 4096) are used for angular synchronism and in order to avoid having to start from a home position.

As a rotary encoder turns endlessly in on particular direction, the representation range of the encoder is exceeded. The result is an encoder overflow which means that the encoder starts counting from 0 again after, for example, 4096 rotations.

This is illustrated by the diagram below.

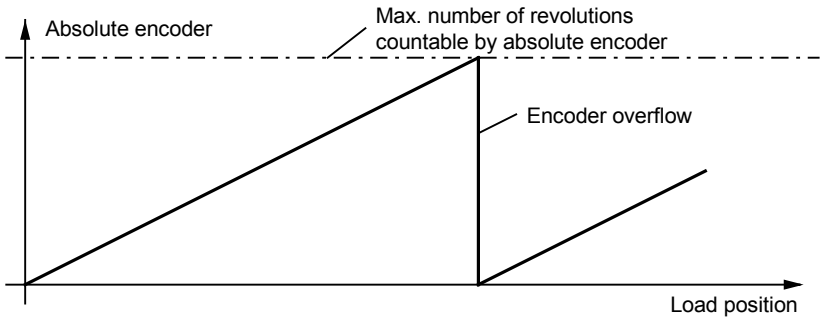

To save costs, an absolute encoder is fitted on the motor and used both for torque and speed control and for position control (EQN 1325). One advantage of this is that fitting the encoder on the motor is much less critical but much more precise than fitting it on the load side.

Mechanical gearing is usually located between the motor and the load for speed adjustment. Depending on the gear ratio, an offset between the zero position of the load and the motor occurs on every encoder overflow.

Example: Gear ratio 1:3, absolute encoder can count 8 revolutions

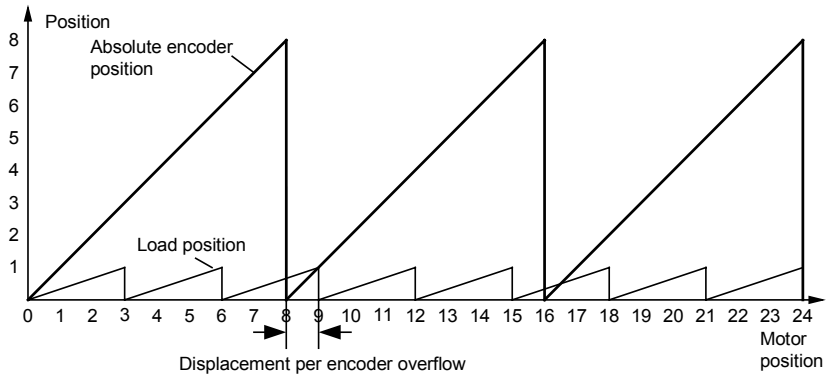

In this case, a load-side offset of 1/3 of a load revolution occurs on each encoder overflow, after three encoder overflows the motor and load zero position coincide again. The load position can no longer be reproduced with certainty after an encoder overflow.

Motor encoder position tracking block

In order additionally to reproduce the position of the load for any gear ratios, the free block "Start position absolute encoder" is used with mechanical gear ratios (function diagram 327 for motor encoder, function diagram 333 for external encoder). The block counts the encoder overflows using the absolute position. The overflow and revolution counter for retentive storage in an tracking memory element is accessed via connector KK625 (KK628). When the module is powered up, the overflow and revolution counter is accessed from the tracking memory element. The starting position for position acquisition is calculated from the absolute position using this information.

The mechanical gear ratio is given by parameter U810 (U795). U810.01 (U795.01) gives the number of gear teeth on the motor side, and U810.02 (U795.02) the number of gear teeth of the load side. It is important to give the numbers of gear teeth, not the circumferences. Example:

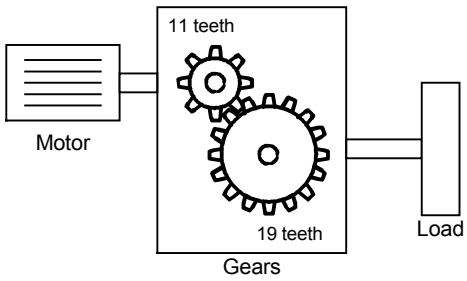

In the example, the motor makes 19 revolutions for 11 revolutions of the load. The value 11 must be entered in U810.01, and the value 19 in U810.02.

NOTE

The ratio given on the gearbox rating plate is often only a rounded value (e.g. 1:7,34). To prevent long-term drift on a rotary axis, the actual ratio of gear teeth must be obtained from the gear manufacturer.

Linking the block

The principal configuration of the block for the motor encoder is shown in function diagram 327. Slotting the block into a time slot automatically ensures that the position acquisition for the motor encoder is placed at the correct starting position. The revolution/overflow counter must be connected with a tracking memory element parameterized for non-volatile data storage. Storage is enabled when valid values are transferred from the encoder evaluator (B070 on TRACK input). After parameterization, the overflow counter should be reset once only and the unit switched OFF and ON again. Thereafter, the overflow counter must not be reset again. Depending on the tracking memory element, the following wiring is necessary.

Tracking memory element 1	**Tracking memory element 2**
U950.76 = 4 U203.01 = B070 U204 = 625 U205 = 1	U952.69 = 4 U206.01 = B070 U207 = 625 U208 = 1
U811.01 = 551	U811.01 = 552

The same function is provided by software version V1.50 and higher for external encoders, too. The function is shown on function diagram –333-. The function and handling of the function block is identical to that of the motor encoder.

Rotation with the power off

Besides tracking encoder overflows, the block monitors whether the drive is rotated or runs down while no power is supplied to the electronics.

NOTE

A position can be reproduced only if the number of revolutions made with the power off corresponds to less than half of the encoder range. For example, in the case of standard encoder EQN 1325 this is **2048** motor revolutions.

NOTE

The "Position tracking for motor encoder" (function diagram 327) and "Position tracking for external encoder" (function diagram 333) blocks have not been released for SSI encoders.

9.4.10 Linear axis with absolute encoder when the traversing range is greater than the display range of the encoder.

The following chapter describes the procedure when the traversing range of a linear axis is greater than the traversing range of the absolute encoder.

Basic problems

Absolute encoders have a limited display range. For example, on multiturn encoder EQN1325 up to 4096 encoder revolutions can be counted. This is sufficient for most applications. However, if the traversing range of the linear axis is greater than the display range of the encoder, an encoder overflow occurs. The position of the axis can no longer be uniquely determined.

This problem is explained in the diagram below:

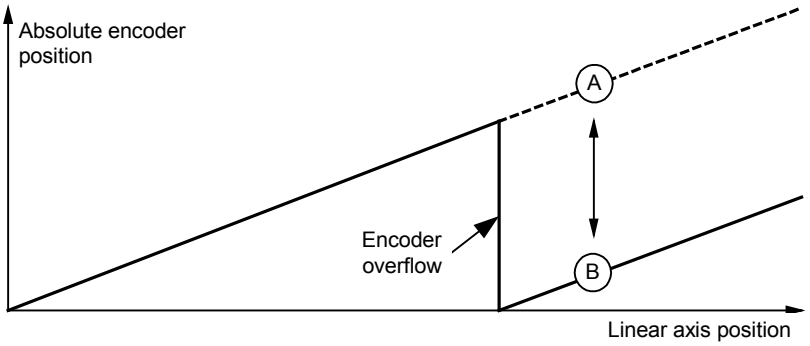

When the encoder overflows, the absolute encoder starts counting from zero again. The position of the linear axis is position A, but position B is output by the absolute encoder.

Function block "Starting position absolute encoder" function diagram [327] ([333]) ensures the correct functioning of the position acquisition even if the encoder overflows.

The function block is integrated as shown in the function diagram. The block is handled in exactly the same way as that of the rotary encoder (Section "9.4.9"), only configuration U813 (U798) has to be parameterized to xxx1 = linear axis.

NOTE

Maximum 15 encoder overflows can be tracked. When the range is exceeded, a fault is displayed at binector B565 (B566).

Handling

Position tracking is set such that the overflow counter lies within the valid range 0 to 15. Underflows below zero must be prevented. The following commissioning procedure must therefore be followed:
The linear axis is traversed to the end stop, so that the smallest possible position actual value results. The overflow counter is then set to zero via U812 (U797) and the converter is switched off and on again.

9.4.11 Position Sensing System for External Machine Encoder [335]

The position sensing system for external machine encoders is shown in [335] and has the same function as the position sensing system for motor encoders [330].

However, connector KK0105 [335.2] has a different scaling to rotor position KK090: Whereas for "position acquisition motor encoder" a connector on which a revolution to 2^32 is mapped is wired as the source, "position acquisition external encoder" evaluates the increments that the encoder module produces without rescaling.
By "increment" we mean the smallest digital unit that the encoder produces:

- On pulse encoders with two pulse tracks offset by 90°, the pulse edges of both tracks are evaluated. With this type of evaluation known as "pulse edge evaluation", the pulse encoder produces four times as many "increments" per revolution as it has marks (1024 marks = 4096 increments per revolution).
- On encoders that provide a sine and a cosine track (A/B track), the passages through zero of both tracks are evaluated much the same way as for a pulse encoder. Here, too, four times as many increments per revolution are produced as the number of sine/cosine periods per revolution (2048 periods = 8192 increments). The resolution can be increased additionally with the fine resolution (see below).
- On SSI encoders or EnDat encoders, which only transfer their positional value to the encoder module via a serial protocol, one increment corresponds to the lowest value bit in the protocol.

Connector KK105 outputs the position actual value in increments.
The encoder with the sine and cosine tracks (A/B track) is the exception among the listed encoders. If this encoder is operated on an SBM2 encoder module, the analog value of the A/B track can be evaluated over and beyond simple acquisition of the passages through zero of the A and B tracks, as this module also contains A/D converters with 12-bit resolution. The resolution that can be produced by evaluating the analog signals is called "fine resolution".
On the external encoder the degree to which the resolution of the positional value is to be increased can be selected via parameter 154. In the binary number, the increments are moved to the left by the number of positions parameterized in P154 and the lower bits that are released as a result are filled up with the fine resolution. One increment is divided into 2^P154 steps. A sensible value for P154 is between 7 and 10.
Please note that the entire position with fine resolution must still fit in a 32-bit number! (example: multiturn encoder EQN1325: Revolutions 12 bits + increments 13 bits + fine resolution 7 bits = 32 bits).

9.4.12 Position Control System [340]

The position controller is shown in [340]. The method used to connect the position controller to the technology is described in [801 + 817] and in the section entitled "Commissioning the Technology".

The position control system [340] is implemented using a PI controller with a deactivatable I component.

Actual position smoothing P195

If the actual position signal is very unstable, it can be stabilized using the actual value smoothing parameter. It should be remembered, however, that smoothing the signal reduces the potential dynamic response of the system. The set input is used to synchronize the output of the smoothing element with the actual value of the position sensing system during setting or correction processes, e.g. on a rotary axis with tool compensation. Synchronization is only necessary if a smoothing time constant has been entered in P195.

Position setpoint smoothing P191

Position setpoint smoothing is only appropriate if the speed precontrol feature of the position control system is used. In this case, the smoothing time constant should be set to the equivalent time constant of the speed control loop. Position setpoint smoothing is not usually required. Position setpoint smoothing must also be set when the position setpoint is set.

Position difference smoothing P199

Position difference smoothing is preferred for rotary axes and angular synchronization, since it overcomes the problems associated with setting events. Like actual position smoothing, position difference smoothing reduces the potential dynamic response of the drive.

Position setpoint interpolator P770/P771

If the position setpoint (e.g. for synchronization or positioning) is generated in a slower sampling time than that of the position controller, the consequence is jumps in the setpoint for the position controller. This results in unstable operation and reduces the level of accuracy that can be achieved. In order to optimize the transition between sampling times, it is possible to convert the rough graduation of the setpoint commands into a fine graduation for the position controller. This task is performed by the position setpoint interpolator, the operation of which is defined by two parameters:

P770 defines the ratio between the sampling time of the position setpoint generator to the sampling time of the position controller in steps of 2^{P770}. Example: time slot of the position setpoint generator = T4, sampling time of the position controller = T3, P770 = 1.

If P770 is set to a positive value, the position setpoint is extrapolated (lookahead calculation). If P770 is negative, the setpoint is interpolated. The extrapolation option must be used when no speed precontrol is active on the position controller. If the precontrol function is active, interpolation of the position setpoint should be selected instead.

P771 defines the limit for the setpoint change, referred to the sampling time of the prior position setpoint detection.

The following setting rule applies for P771:

$$P771[LU] = \frac{2 \cdot P205\,[1000\,LU/min] \cdot \left(\begin{array}{l} \text{Scanning time of the prior} \\ \text{position setpoint detection [ms]} \end{array} \right)}{60}$$

If the setpoint change is below the limit, the interpolation is performed. If the change is above the limit, the position setpoint is transmitted immediately. This function is required in order to disable interpolation during setting events.

The graphic below illustrates the response of the interpolator:
P770 = -2

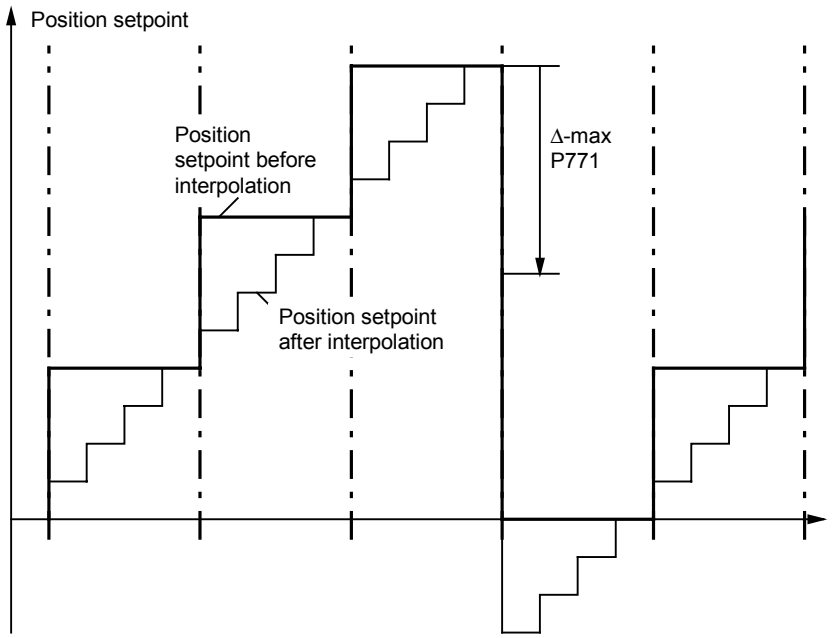

Fig. 9-22

When the extrapolation option is used, the setpoint is conditioned as follows:
P770 = +2

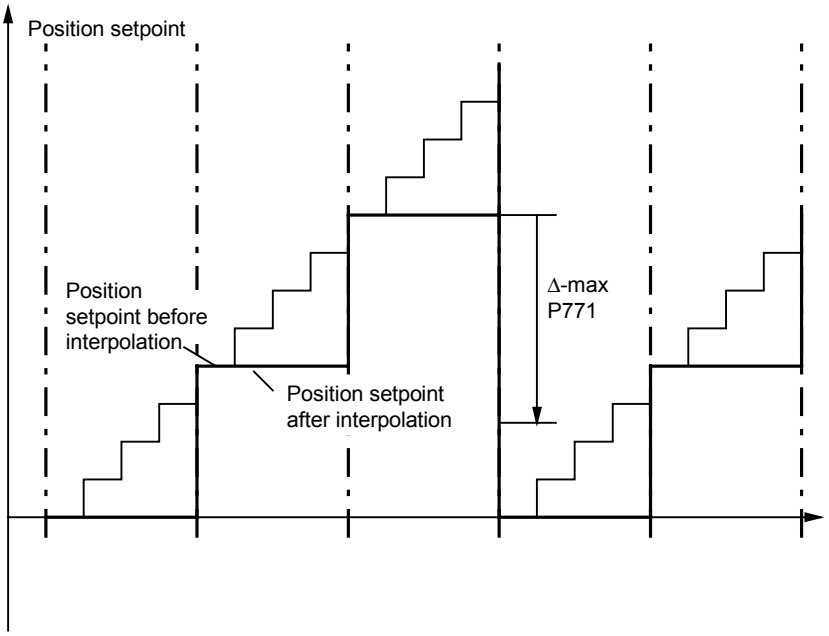

Fig. 9-23

Loop gain factor P204

The loop gain factor represents the proportional gain of the position controller. It is defined such that the setting is independent of the encoder resolution and the traversing velocity from the perspective of the user. It is important that the rated velocity in P205 actually represents the velocity of the drive at 100 % speed setpoint (defined in P353).

Example:

Reference speed of motor:	3000 rpm (P353)
Gear factor:	1:10
Diameter:	300 mm

$$V = \text{Reference speed} \times \frac{1}{i} \times \text{Diameter} \times \pi$$

$$V = 3000 \text{ rev / min} \times \frac{1}{10} \times 300 \text{ mm} \times \pi$$

$$V = 282743 \ \frac{\text{mm}}{\text{min}}$$

This rated velocity must be entered in P205 and must also be entered in MD23 [804] if the technology option is used.

The rated velocity can also be derived from the hardware parameters. The following example refers to the use of the motor encoder:

AVWF	P169 / P170
Actual pos. resolution	P171
Reference velocity	P353

$$\frac{V}{\left[\frac{1000\,LU}{min}\right]} = \frac{P353}{\left[\frac{1}{min}\right]} \times \frac{AVWF}{\left[\frac{LU}{inc}\right]} \times \frac{2^{P171}}{[inc]} \times 10^{-3}$$

9.4.13 Technology Overview and Mode Manager [802]

[802] provides you with a general overview of the technology functions with references to all relevant pages of the function diagram. Sheet [802] thus represents a "graphical table of contents" for all of the technology functions. A rough sketch is also provided of the signal exchange between the technology and the basic unit functions of the position controller, speed controller and position sensing system.

The mode manager connects the input signals to the current operating mode selected by [MODE_IN].

Input signals include machine data MD1 to MD50, positioning control signals, the special "digital inputs for positioning" and the position signals from the position sensing system.

As you can see in the graphic below, 7 modes are available for selection: positioning modes 1 to 6 and synchronization mode 11.

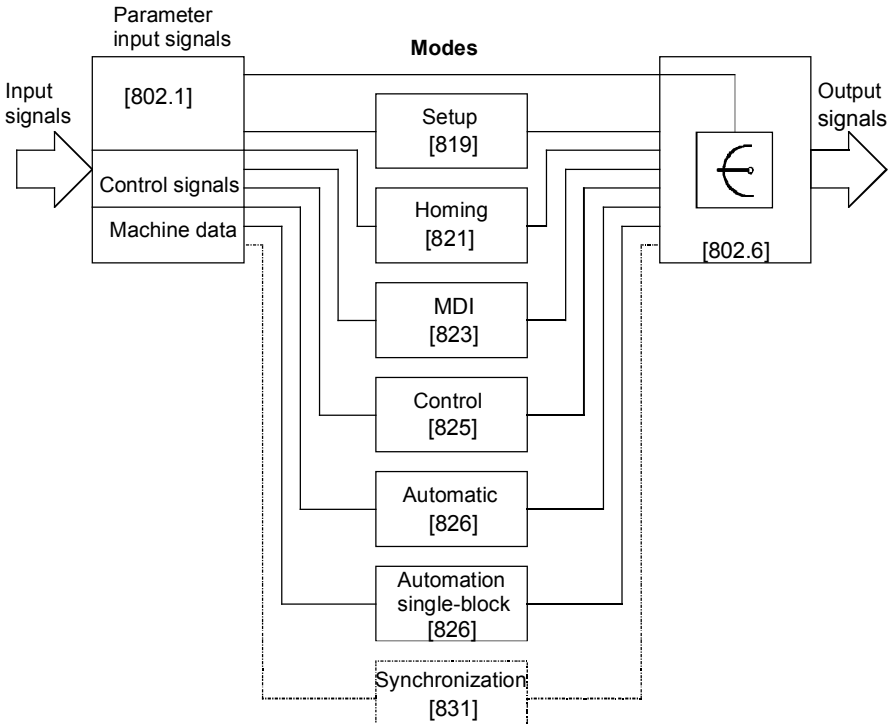

Fig. 9-24

Mode	**Use**
Setup	Position-controlled movement of drive at constant velocity
Homing	Used for referencing with incremental encoder types
MDI	Used to define and execute an NC data block for a point-to-point positioning operation
Control	Speed-controlled mode
Automatic	Automatic execution of NC programs
Automatic single-block	Block-by-block execution of NC programs for test purposes, etc.

Nesting positioning and synchronization in a sampling time

The technology functions are not calculated until they have been nested in a sampling time. One parameter each is provided for nesting the following functions in a sampling time:

- Positioning modes (including synchronization)
  Parameter U953.32 [802.8]
- Synchronization as independent free block
  Parameter U953.33 [802.8]
- Virtual master axis
  Parameter U953.34 [832.8]
- Generation of positioning control signals
  Parameter U953.30 [809.5]

Please refer to [702] and the notes in [802.8] for more information on nesting of technology functions in a sampling time.

Positioning including synchronization can be nested in a sampling time with parameter U953.32. The value 4 is the preferred value for this parameter (= 16*T0 = 3.2 ms at 5 kHz converter clock frequency).

Synchronization can also be activated as an independent block, preferably in T4 [U953.33 = 4]; in this case the mode manager is not used and the positioning modes must remain deactivated with U953.32 = 20 (see the section below entitled "Synchronization Mode - Overview" for information on the differences in synchronization).

The mode manager switches the output signals from the active mode through to the signal outputs [802.5].

9.4.14 Machine Data [804]

The machine data are used to define centralized settings required from the perspective of the working machine and the mechanical transfer elements for positioning and synchronization. The machine data are abbreviated with "MD..." in all documents. They have the same meaning for technology option F01 and for the centralized technology in SIMATIC M7.

MD1 to MD50 are listed in a brief overview in [804]. They are mapped onto MASTERDRIVES parameters U501.01 to 501.50.

📖 You will find detailed information on all machine data in the "Machine Data" section of the Function Description in manual /1/. Please note that the decimal point has been omitted from all machine data on sheet [804], since they appear in this format in the MASTERDRIVES parameter display. In manual /1/, however, the machine data are presented in the format used in the OP screens (see also /2/, i.e. occasionally with decimal points).

Example for presentation of decimal points in machine data:

- Value range for MD14
  - in manual /1/: 0.001...99.999 [1000*LU]
  - in MASTERDRIVES MC: 1...99 999 [LU]
- Input value for following error of 300 LU in MD14:
  - in manual /1/: 0.300
  - in MASTERDRIVES MC: 300

Changes to machine data must be transferred with U502 = 2 [804.3]. This is only possible at a standstill. A machine data transfer is also initiated when the electronic power supply is switched on/off.

After one or more machine data have been changed, U502 changes automatically from value "0" to value "1". After transfer of the machine data by U652 = 2, U652 automatically changes to value "0" if no errors were detected in the machine data.

If the machine data contain an error, the changes are not accepted, U502 is set to 1 and an error message is output to n500. At present only one error is possible, i.e. "negative limit switch is located to right of positive limit switch", i.e. MD12 > MD13.

CAUTION

If the machine data are modified with a DriveMonitor download file, the MASTERDRIVES electronic power supply must be switched off and on again, in order to activate the new machine data.

NOTE
Machine data for synchronization

If you use synchronization, but no positioning functions, only machine data MD11 and MD49 are relevant [836.4 + 836.7]; if synchronization is nested as a positioning mode, MD12, MD13 and MD15 are also referenced. See also the section below entitled "Synchronization Mode - Overview".

9.4.15 Parameter Download File POS_1_1 [806]

DriveMonitor download file POS_1_1 is used to set up the message configuration of the 10 process data words in the send and receive direction for the S7 software "Motion Control Configuring Package" /1/. This assignment is described in the "Control and Checkback Signals" chapter of the Function Description in manual /1/. See also the section below entitled "Procedure for Using the GMC-BASIC S7 Software" in "Commissioning the Technology" and the section entitled "Communication with the Technology".

9.4.16 Positioning Control Signals [809]

There are two ways to define the positioning control signals:

- U530 can be used to select any double-connector as the source of the positioning control word. When defining the control signals via PROFIBUS-DP, for example, U530 = 3032 would assign this function to receive words 2 and 3 on the communication board [120] (double-connector KK3032).
- With the factory setting U530 = 860, the control signals are defined by binector with U710. In this case, you must remember to nest the "control signal generation" block in a sampling time using U953.30 (recommended setting: U953.30 = 4). Any binectors can then be used as the source of the individual control commands.

📖 The positioning control signals are described in detail in the "Control and Checkback Signals" chapter of the Function Description in manual /1/.

9.4.17 Positioning Status Signals [811]

The status signals are routed via various binectors and display parameters to double-connector KK315, the positioning status word. For example, you can connect the positioning status word to send words 2 and 3 [125] of the communication board (e.g. PROFIBUS-DP interface) with P734.3 = 315 and P734.4 = 315. The status bits available at binectors B351...B361 can be wired in any configuration using BICO technology.

📖 The positioning status signals are described in detail in the "Control and Checkback Signals" chapter of the Function Description in manual /1/.

9.4.18 Digital I/Os for Positioning [813]

Digital I/Os for positioning

U536 and MD45/MD46 allow you to use any binectors of the MASTERDRIVES MC for special positioning control functions. The digital inputs of the converter terminal strip X101 or the terminal expansion boards EB1/EB2 can be selected as binectors. You can also connect binectors, which are generated by logic circuits using the free blocks [765...780], to this point.

Digital outputs for positioning

MD47/MD48 can be used to assign special positioning status functions to binectors B311...B316. These binectors can be wired in any configuration using BICO technology, e.g. to PROFIBUS-DP or to digital outputs on the converter terminal strip or the terminal expansion boards EB1/EB2.

You will find detailed information on the digital I/Os for positioning under MD45 to MD47 in the "Machine Data" chapter of manual /1/. Please note that this documentation is based on a special digital I/O assignment for positioning with converter terminal strip X101, however this configuration is not a mandatory requirement for general applications.

9.4.19 Evaluation and Control of the Position Sensing System, Simulation Mode [815]

Position sensing

Sheet [815] depicts the interconnection of the technology with the position sensing system for the motor encoder [330] and the external machine encoder [335].

The upper section details the measured values and status signals that the technology requires from the position sensing system. The lower section shows the control signals and set/offset values transmitted from the technology to the position sensing system.

Each section has 2 columns specifying the parameters required for the connection between the technology and the position sensing system for the motor encoder or external machine encoder. With the factory setting, the connection to the motor encoder is mostly intact, and so only a small number of parameters needs to be modified in this case. The parameter settings are listed in "Connection and Parameters of the Position Sensing System" in the section entitled "Commissioning the Technology".

Simulation mode

General information on simulation mode

During simulation mode, the position actual-value is simulated by the position encoder, i.e. all the functions of the axis, including setpoint output (at parameters n540.01, n540.10 and n540.37 [817]), automatic mode and the M functions can be tested without a position encoder and drive. Even if a motor is connected up, no axis movement takes place. This is achieved by setting the position setpoint KK310 to the current position actual-value and by setting the speed and acceleration precontrol KK312 and KK312 to "0" [817].

Via the simulation mode it is also possible to test the interaction of a higher-level control system with the positioning functions in the drive.

An axis can be activated via U503 independent of the selected operating mode of simulation (U503 = 1) and switched back to normal operation (U503 = 2).
If the SIMATIC M7 standard software GMC BASIC /1/ is used, simulation can be selected or deselected via the "Simulation input" task. The selection is stored in the EEPROM.

Activating simulation mode
After "Simulation ON", the technology must be reset via the control signal [RST] (Reset technology) or the drive must be re-energized (Power OFF/ON). Simulation is not activated until this has taken place.

De-activating simulation mode
After "Simulation OFF" the technology must be reset via the control signal [RST] (Reset technology) or the drive must be re-energized (Power OFF/ON). Simulation is not de-activated until this has taken place.

9.4.20 Setpoint Output and Enabling [817]

Sheet [817] shows the output of the following setpoints to the basic unit:

- **Position setpoint** (with jerk limiting)
- **Speed setpoint** for the speed control modes (homing and control)
- **Speed precontrol value** for the position control modes (setup, MDI, automatic, synchronization)
- **Acceleration precontrol value** (not yet implemented in V1.2)

Binector B305 is used to switch between the position control modes (B305 = 0) and the speed control modes (B305 = 1).

At the right-hand border of [817] you will find the parameters required in order to connect these signals to the position, speed and torque control systems.

9.4.21 Faults, Warnings, Diagnostics [818]

The main faults and warnings generated by the technology are shown on sheet [818] together with diagnostic parameter U540 of the technology.

You will find further information on faults, warnings and diagnostics in the section of the same name at the end of this chapter.

9.4.22 Setup Mode [819]

📖 You will find detailed information on "Setup Mode" in the chapter entitled "Setup Mode" in the Function Description of manual /1/.

Mode 1 "setup" allows the axis to be moved in position control mode using the direction commands "jog forwards" [J_FWD] and "jog backwards" [J_BWD].

The "fast/slow" command" [F_S] can be used to switch between two velocity levels, which can be set in U510.1 and U510.2. The two velocity levels are multiplied by the override.

In order to prevent abrupt changes in velocity, the output setpoint is controlled by a ramp-function generator, the ramps of which can be adjusted with MD18 and MD19.

Software limit switches MD12 and MD13 are evaluated, however this is only the case with an incremental position encoder if the axis has already been referenced (status bit [ARFD] = 1). A start command [STA] is not required for setup mode.

Setup mode is useful for commissioning and maintenance work and machine setup, for example. Setup mode also includes the teach-in feature, which allows you to enter the current position in an automatic NC program block.

The control signal commands for the positive direction of movement are shown in the diagram below.

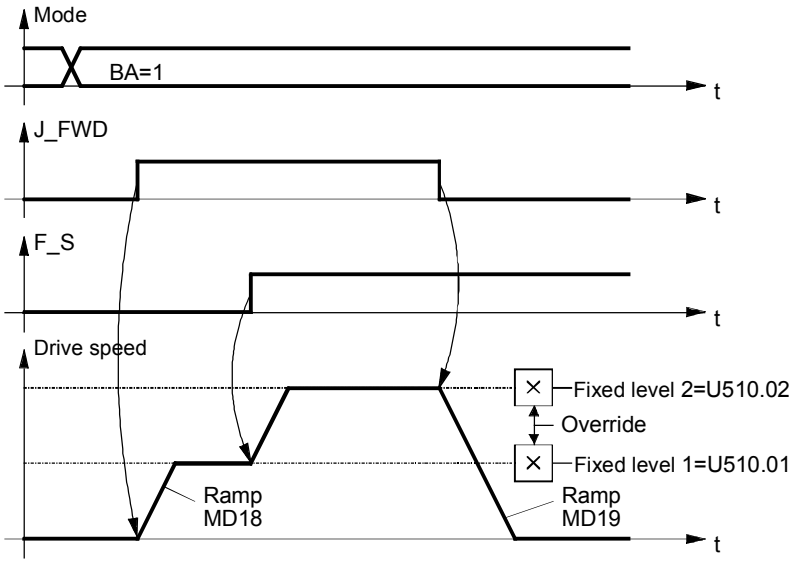

Fig. 9-25

9.4.23 Homing Mode [821]

Mode 2 "homing" is only necessary with incremental encoders, i.e. when using a resolver, optical sin/cos encoder or pulse encoder. Homing is not necessary when using an absolute encoder or roll feed. With incremental encoders, the axis must be moved to the home position before a position control mode (setup, MDI, automatic) can be started.

WARNING

- Automatic reversal of the traversing direction does not take place during the homing procedure if a hardware limit switch is reached. Hardware limit switches must be evaluated by the external machine control system and additionally - if they are safety-related - by the hardware (see also the danger notice in "Commissioning the Technology").
- No monitoring takes place when a movement is started, although the "axis referenced" status signal [ARFD] is active; this status bit must be evaluated by the external machine control system.

You will find detailed information on homing mode in the chapter entitled "Reference Point Approach" in the Function Description of manual /1/.

When incremental position encoders are used, there is no relationship between the measuring system (incremental encoder) and the mechanical position of the axis when the controller is switched on. For this reason, the axis must be moved to a defined home position each time the system is switched on, i.e. in order to reference the axis.

There are two ways to reference the axis:

- With homing, the axis travels across a proximity switch (BERO) (rough pulse) to the zero pulse (fine pulse) of the incremental encoder. When the fine pulse is detected, the measuring system is set to a defined coordinate, thereby establishing the absolute position reference to the mechanical system.
- With "set home position", the coordinate is set immediately on activation by the user program. The home position thus depends on the mechanical position of the axis at the time the home position is set.

In most cases, the homing procedure is used to reference the measuring system, since this method is accurate to the nearest increment.

"Set home position" is used if neither a rough pulse (proximity switch) nor a fine pulse is available or if the application requires the axis to be referenced at different positions.

Parameter settings The diagram below shows an overview of the parameter settings.

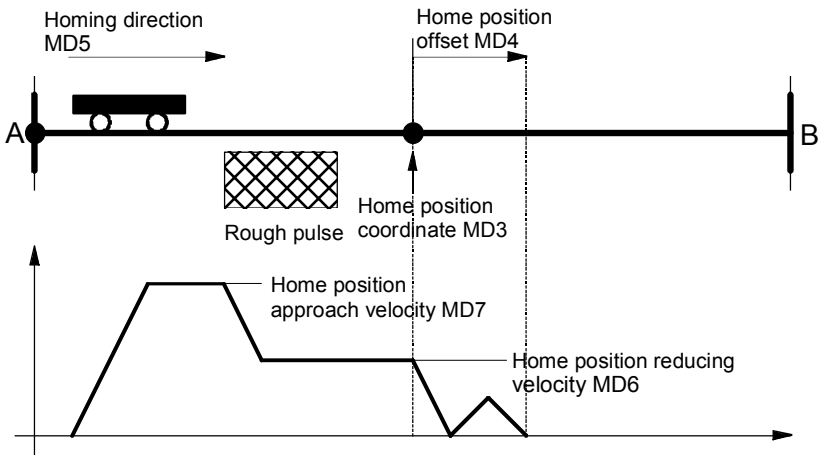

Fig. 9-26

Example The following example shows the referencing sequence.

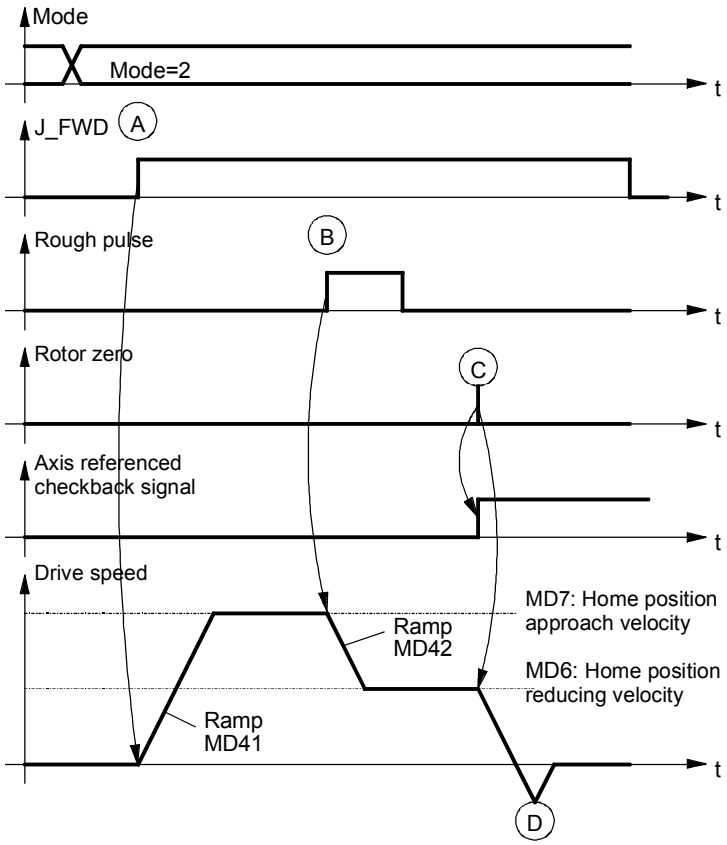

Fig. 9-27

(A) On activation of the mode 2 command, the axis is started with jog forwards or jog backwards. The drive accelerates to the home position approach velocity MD7. The user must ensure that the home position is crossed in the correct direction. The homing direction is defined in MD5 and must match the setting on the position sensing system (motor encoder P183). The limit switches are not evaluated.

(B) When the rough pulse signal is detected, the drive decelerates to the home position reducing velocity MD6.

(C) When the next rotor zero is detected, the drive is brought to a standstill. The axis referenced checkback signal (ARFD) is output.

(D) The drive realigns itself at the home position.

Connection of the rough pulse

The rough pulse must be wired both via parameter P178 (for motor encoders) to the position sensing system and to the positioning system. This is performed via one of the digital inputs of the positioning system, connected to the digital inputs with parameter U536. The function of the digital input is defined with MD45.

Example 1: Motor encoder with resolver, rough pulse connected to digital input 4 (terminal X101.6, see [90.5].

Par.	Value	Meaning
P178	16	Rough pulse for position sensing from digital input terminal 6 [330.5]
U536.4	16	Digital input I4 for positioning from digital input terminal 6 [813.1]
U501.45	xx7xxx	Function of digital input I4 for positioning input is proximity switch for homing. MD45 [813.4]

Example 2: Machine encoder with incremental encoder, rough pulse connected to rough pulse 1 of pulse encoder evaluation for machine encoder (function diagram 255.3, connector X400/64).

Par.	Value	Meaning
U536.4	66	Digital input 4 of positioning system from rough pulse 1 of pulse encoder evaluation for external machine encoder [255]
U501.45	xx7xxx	Function of high-speed input is proximity switch for homing

The homing procedures (with homing switch and encoder zero mark) implemented up to V.1.32 are only partly suitable for rotary axis applications. Elaborate adjustments (adapter gears, etc.) have to be performed in order to make use of the present homing procedures.

New homing procedures have therefore been implemented:

1. Homing with homing switch only
2. Homing with encoder zero mark only
3. Use of a reversing switch during homing.

9.4.23.1 Homing with homing switch only

Homing and referencing are governed solely by the homing switch. The zero mark of the encoder is disregarded.

1. New machine datum MD8 for defining referencing
2. 0 = Homing with bero and zero mark (<V1.4x)
   1 = Homing with bero only
   2 = Homing with zero mark only

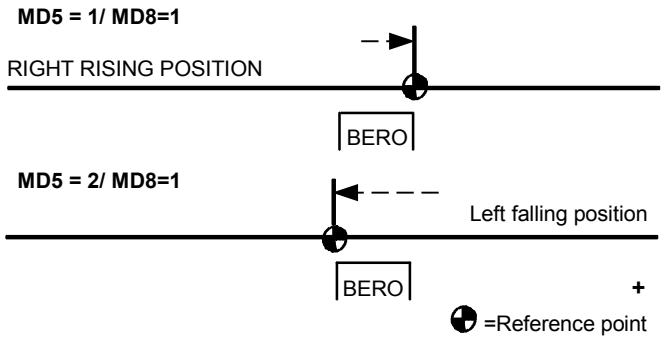

With homing switch only, reference point at right

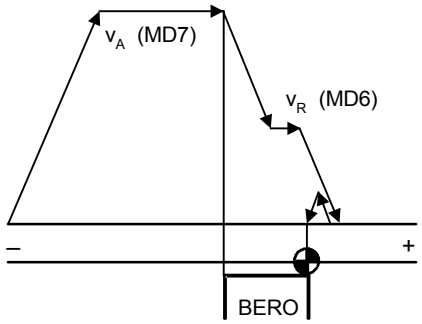

With homing switch only, reference point at left

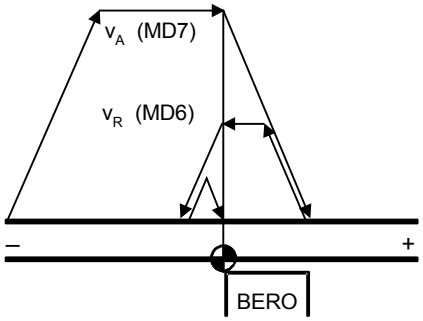

NOTICE

If the axis is already on the switch at the beginning of homing, this fact must be taken into account.

9.4.23.2 Homing with encoder zero mark only

This function is implemented analogously to the description given in Section 9.4.23.1. However, only the zero mark of the encoder is used as reference signal. For reasons of accuracy, starting should be at reduced speed.

9.4.23.3 Use of a reversing switch during homing

It was previously necessary during homing to ensure that the reference point was pointing in the right direction when the axis was at rest. If not, the axis traveled to the limit switch.

When a reversing switch is also evaluated, the direction of travel is given either by the homing (same procedure as before) or by the reversing switch (in which case the axis reverses and looks for the homing switch in the other direction).

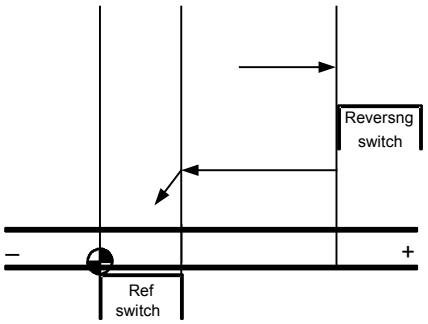

The reversing switch is always active in homing mode. A digital output (MD45 = 8) can be used for connecting the reversing switch.

9.4.24 MDI Mode [823]

Mode 3 "MDI" allows easy point-to-point positioning on the external control system. The abbreviation "MDI" is derived from NC technology and stands for "Manual Data Input".

Point-to-point positioning - it's easy

A simple MDI positioning operation requires the following steps [823.5]:

- **Step 1:** Define an MDI block using 5 words (8 bytes) over the field bus or select an MDI block, which is permanently stored in 3 indices of a parameter. An MDI block comprises:
  - G functions (1 word specifying whether positioning is absolute or relative and – if desired – an acceleration factor)
  - Position (1 double word, target position for absolute positioning or distance to be crossed for relative positioning)
  - Velocity (1 double word)
- **Step 2:** Define a start command [STA]
- **Step 3:** Wait until the "destination reached, axis stationary" status bit [DRS] changes to "1"
  ⇨ the traversing operation is complete, the axis is in position.

These steps are described in detail below:

Define the "MDI block" [823.4...6]

The first step is to define the desired MDI block. An MDI block describes the reference data of a positioning operation and comprises 3 components:

- Two "G functions" (this expression is also derived from NC technology):
  The **first G function** defines whether the traversing operation is to be performed in absolute or incremental (relative) dimensions, i.e. whether the specified target position refers to the home position or the current position. On incremental measuring systems, the home position is defined by the home position coordinate MD3 [823.4]; on absolute encoder systems, it is defined by the zero point of the position encoder. Only relative positioning is used on roll feeds.

  The first G function can accept two values:
  - 90 = Positioning in absolute dimensions
  - 91 = Positioning in incremental dimensions (relative positioning)

The **second G function** defines the acceleration override", that is a reducing factor, which can be set in steps of 10 %, for the acceleration/deceleration of the traversing ramps defined in MD18 and MD19. The second G function can accept the following 10 values:

- 30 ⇨ acceleration = MD18,
  deceleration = MD19 (normal setting)
- 31 ⇨ acceleration = 10 % of MD18,
  deceleration = 10 % of MD19
- 32 ⇨ acceleration = 20 % of MD18,
  deceleration = 20 % of MD19
- 33 ⇨ acceleration = 30 % of MD18,
  deceleration = 30 % of MD19

  ...
- 39 ⇨ acceleration = 90 % of MD18,
  deceleration = 90 % of MD19
- **Position** in [LU] units, i.e. length unit defined by the actual value weighting factor (AVWF)
- **Traversing velocity** in [10 LU/min] units; e.g. AVWF sets 1 LU = 1 µm, desired velocity = 1000 mm/s ==> input value = 6 000 000

Further below you will find two practical examples of MDI blocks.

Select MDI block [823.3]

11 MDI blocks are available, of which one can be selected with the 4 control bits [MDI_NO] using the large selectors [823.3 and 809.4] at the top border of [823]. MDI block 0 can have any 3 connectors as a source. These can be selected with parameters U531, U532 and U533 (the G functions use a "single connector" as the source, the position and velocity use a double-connector). The remaining 10 MDI blocks, numbers 1 to 10, are stored in the non-volatile triple-index parameters U550...U559.

MDI block 0 can be transmitted to the MASTERDRIVES via a field bus (PROFIBUS-DP, USS etc.). MDI blocks 1...10 can be selected using the digital inputs of the converter terminal strip.

Numeric representation of G functions

The G functions are represented in hexadecimal format in the connector selected by U531 (MDI block "0") and in decimal format in non-volatile parameters U550.1...U559.1 (MDI blocks 1...10).

Example: Absolute positioning with 100 % acceleration override: value of connector = 5A1E (hex), value setting of fixed parameter 90 30 (decimal). 9030 is also the factory setting for the permanent G functions.

The representation of the position and velocity is identical in the double-connectors and parameters.

Example 1: Define permanent MDI block by parameters

- The MDI block is to be stored as permanent MDI block no. 2 in parameter U551 [823.4].
- A length unit of 1 LU = 1 µm has been defined with reference to the actual value weighting factor (AVWF) (see the section entitled "Position Sensing System for Motor Encoder").
- The axis is to be positioned at target position 385.123 mm using absolute dimensions.
- The traversing velocity is 65 000 mm/min.
- The movement is to be performed at 100 % of the acceleration/deceleration set in MD18/MD19.

⇨ The following parameters need to be entered:

U710.09 = 1	Select MDI block 1 [809.3], in this case with fixed binector "1". Any binector can be connected here, for example a digital input
U551.1 = 9030	90 = absolute dimensions, 30 = 100 % acceleration/deceleration
U551.2 = 385123	Target position = 385.123 mm = 385 123 µm = 385 123 LU
U551.3 = 6500000	Velocity = 65 000 mm/min = 65 000 000 µm/min = 65 000 000 LU/min (input in [* 10 LU/min])

Example 2: Define a variable MDI block via PROFIBUS-DP

- The MDI block is to be defined using receive words 6 to 10 of PROFIBUS-DP [120.6] , i.e. as MDI block no. 0 [823.4].
- A rotary table is used. A length unit of 1 LU = 0.001° has been defined with reference to the AVWF.
- Relative (incremental) dimensions are to be used to position at a target position located -12.345° away from the current position.
- The traversing velocity is 190°/min.
- The traversing movement is to take place at only 30 % of the acceleration/deceleration set in MD18/MD19, since the rotary table is carrying a heavy load.

⇨ It is necessary to wire the MDI block from PROFIBUS to MDI mode by setting the following parameters:

U531 = 3006	Wire G functions from PROFIBUS receive word 6 [120.6] to MDI block no. 0 [823.3]
U532 = 3037	Wire PROFIBUS receive words 7 and 8 as double word connector KK3037 [120.6] to "position" of MDI block no. 0 [823.4]
U553 = 3039	Wire PROFIBUS receive words 9 and 10 as double word connector KK3039 [120.6] to "velocity" of MDI block no. 0 [823.6]

⇨ The contents of the PROFIBUS message frame for defining the MDI block are as follows:

Word 6 = 5B 21 (hex)	;5B (hex) = 91 (decimal) = "relative traversing" ;(in incremental dimensions) 21 (hex) = 33 ;(decimal) = "30 % acceleration/deceleration"
Words 7 and 8 = FFFF CFC7 (hex)	;-12.345° = -12345 LU = FFFF CFC7 (hex)
Words 9 and 10 = 0000 4A38 (hex)	; 190°/min = 190 000 LU/min ==> input value ;in [10 LU/min] = 19 000 (decimal) = 4A38 (hex)

Start of the traversing operation

A simple traversing operation is started as follows:

- Drive ON (OFF1=1; inverter enable [ENC] can remain permanently at "1"; [180])
- Select MDI mode [MODE_IN] = 3 [809.4]
- Wait for a mode checkback signal [MODE_OUT] [811]
- Set the start command [STA] to "0" [809.4]
- Wait for a start enable [ST_EN]
- Evaluate any warnings/faults (bits 3 and 7 in basic unit status word 1 [200], connector K0250 [510], parameter n540.26 [818])
- Initiate the start command (0 => 1 edge at [STA])

Wait for the checkback signal indicating the end of the traversing operation

- The "function terminated" status bit [FUT] switches to "0" when the start command is activated and switches to "1" when the movement is finished or aborted in the event of a fault [811.4]. The [FUT] is a reliable indication that the traversing movement is finished - even in extremely short movements.
- The "destination reached, axis stationary" status bit [DRS] indicates with a "1" signal that the drive has stopped in the "exact stop window" [811.4]. The exact stop window is defined by machine data MD16 and MD17.

Velocity override

You can use the velocity override [823.3] to modify the traversing velocity defined in the MDI block by a factor of 0 ... 255 %, e.g. during commissioning. The velocity override can also be varied in motion and defined, e.g. via U708 [809.1], over a field bus or from an analog input (the source connector can be selected with U709 [809.1] or U530 [809.7]).

Further information on MDI mode

📖 You will find detailed information on "MDI Mode" in the chapter of the same name in the Function Description of manual /1/. The "MDI on the fly" function is described there. With MDI on the fly, the MDI traversing record is supplied via MDI traversing record 0. The difference to the "normal" MDI lies in the control through the toggle bit, i.e. a flying change of MDI positioning is not performed until a signal change has taken place at the toggle bit.

9.4.25 Control Mode [825]

Mode 4 "control" allows pure speed control of the drive without position control. In "control" mode, the drive can be moved in jog mode with the fixed velocity levels 10 % and 100 % via a ramp-function generator (in a later software version the velocity levels will be adjustable with U511). The jog velocity is multiplied by the velocity override.

Control mode is suitable for commissioning (e.g. for optimizing the speed controller) and maintenance purposes, etc.

You will find detailed information on "Control Mode" in the chapter of the same name in the Function Description of manual /1/.

The following graphic shows the sequence in control mode.

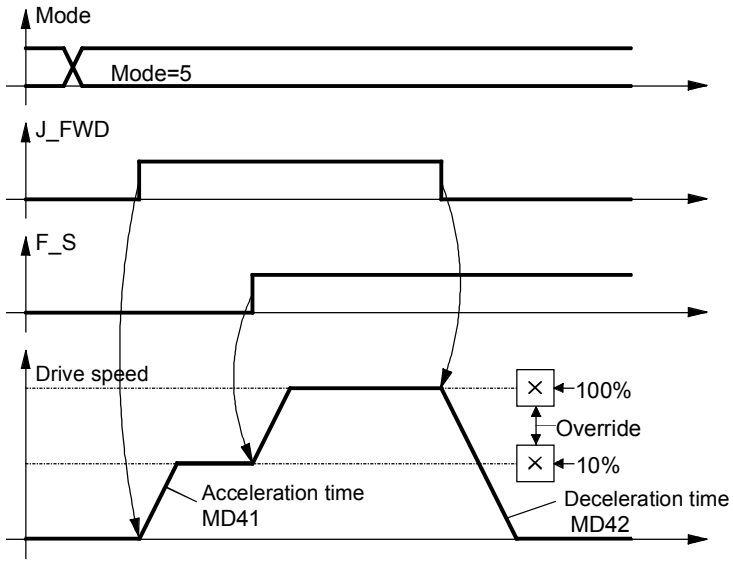

Fig. 9-28

CAUTION

Software limit switches MD12 and MD13 are not evaluated in control mode.

9.4.26 Automatic and Automatic Single-Block Mode [826, 828]

📖 You will find detailed information on "Automatic Mode" and "Automatic Single-Block Mode" in the chapters of the same name in the Function Description of manual /1/.

📖 The "Programming Guide" chapter of manual /1/ describes how to write automatic NC programs for the automatic modes in a programming language conforming to DIN 66025.

Input of automatic programs via MASTERDRIVES parameters

Sheet [828] shows how to enter and edit automatic blocks step-by-step via MASTERDRIVES parameters U571 to U591 (see the parameter list for exact procedure).

9.4.27 Roll Feed [830]

MD1 = 3 and MD11 > 0 activates the "roll feed" axis type, and the special block execution shown in [830] is valid for MDI, automatic and automatic single-block modes. The traversing curve can be adapted highly flexibly to the system conditions. In automatic mode you can start a new block on-the-fly with the "external block change" function, e.g. after detection of a printing index in order to cut printed material to length in an application where a printed image is to appear exactly in the middle of a packaging bag.

Loop counter

The loop counter enables the process of consecutive cutting to length of a selectable number of material pieces to be automated. The loop number can be set via the task interface of the S7 standard software GMC-BASIC /1/ or parameter U507. The loop count that has not yet been processed can be read at parameter n540.36.

9.4.28 Synchronization Mode - Overview [831]

Sheet [831] shows an overview of the synchronization functions, their interconnection, and the detailed representation of the functions on sheets [832...846] of the function diagram.

You will find detailed information on synchronization mode in the "Synchronization Functions" chapter in the Function Description of manual /1/.

In the interest of the smallest possible deadtime differences, it is strongly recommended to use the virtual master axis as the master value source. An external master value generator ("real master axis", e.g. master pulse generator installed on the front section of the machine) should only be used in exceptional circumstances.

Synchronization mode includes the following functions:

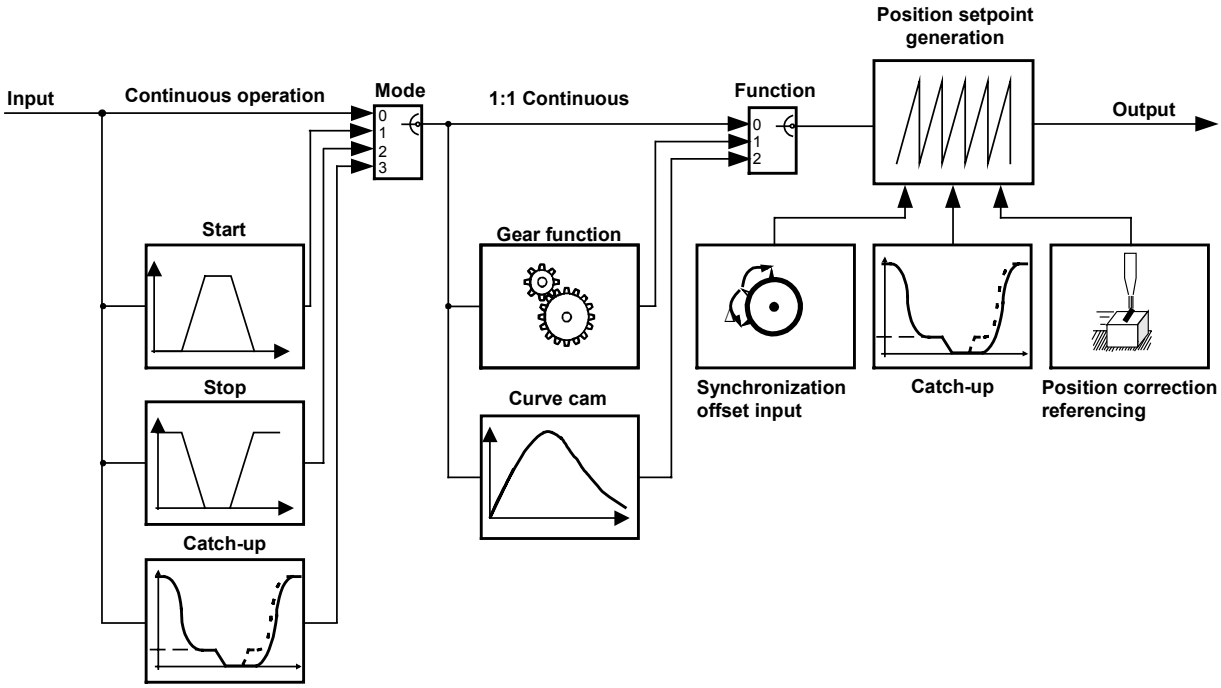

Fig. 9-29

CAUTION

By making an appropriate selection of master setpoint and synchronization parameters make sure that no inadvertent axis accelerations can occur.

Position setpoint jumps as a result of control intervention or parameter changes during running operation can occur both at the input and the output of synchronism.

Function	Use
Engaging cycle [834]	For drives that are normally stationary and are only started up for one operation (e.g. one machine cycle) in synchronization mode.
Disengaging cycle [834]	For drives that are normally used in synchronization mode and are only stopped for one operation (e.g. one machine cycle).
Gearbox function [835]	For drives requiring a transmission ratio between the master and slave axis.
Cam [839]	For drives whose sequence of movements is to be stored in a table.
Position correction [843]	A position correction can be superimposed on an angular synchronization. The position correction references the angular synchronization with external synchronization markers, e.g. pass marks.
Referencing [843]	Referencing "on the fly" to a reference index (e.g. BERO) during synchronization mode
Synchronization to master value [841]	Synchronization of the zero position of the slave axis to that of the master axis via a parameterizable compensation movement.
Displacement setting [841]	Setting of a random size of offset (displacement) angle as a fixed value or in inching mode (motorized potentiometer function)
Catch-up [837]	Coupling a drive up to and out of a synchronized drive system. The coupled-out drive can be autonomously operated at local speed and can be accurately halted at a specified position.

Definitions

The following section describes some important terms used in angular synchronization:

Master drive

The master provides the path setpoint for the synchronization block. There are two types of master: real and virtual.

With a **real master [833]**, the master position is detected by an encoder system, e. g. by a master pulse generator mounted on an upstream mechanical component. The measured position is the path setpoint for the synchronization block.

Advantage: The slave always follows the master.

Disadvantage: Load impacts and corrections affect the slave directly.

With a **virtual master**, an ideal position ramp is generated. This ramp is distributed to all drives. Even the master drive is synchronized with the virtual master.

Advantage: Synchronization has greater overall stability, since load impacts on the master drive no longer affect the slave drive.

Disadvantage: The master drive itself has to be synchronized.

The virtual master [832] can be calculated on any MASTERDRIVES. Its output setpoints KK817 and KK816 [832.8] (path and velocity) are distributed over the SIMOLINK drive interface.

Nesting the Synchronization Block

Calling up the synchronization block U953.33

The synchronization block is called up either as a free block or from the mode manager of the positioning system [802.8]. The differences are listed in the table below.

a) Calling from the mode manager of the positioning system
The mode selector [MODE_IN]=11 can be used to activate the synchronization as a "positioning mode" [809.4]. **This is the recommended method for activating synchronization.**

You can then change between positioning mode and synchronization mode. The synchronization block is called up from the mode manager of the positioning system, and the synchronization is calculated within the sampling time of the positioning modes set in U953.32. The value 20 must then be entered in parameter U953.33.

The positioning control signals are also used in this process, e.g. start command [STA] [809.4], and the corresponding checkback signals are also generated [809]. Following error monitoring is performed with reference to machine data MD15, in addition to software limit switch monitoring – for linear synchronization axes – with reference to MD12/MD13.

📖 The "Synchronization Mode" chapter in the Function Description of manual /1/ contains a detailed description of the control/checkback signals with timing charts for synchronization as a positioning mode.

b) Calling synchronization as a free block
If only synchronization [834...839], and not positioning, is required by the technology functions, it is possible to nest the synchronization like a free block in a sampling time. In this case, parameter U953.33 must be set < 20. The value 4 = 16*T0 (= 3.2 ms with a converter frequency of 5 kHz) is the preferred setting. The positioning modes must remain deactivated in this case with U953.32 = 20.

The use of synchronization as a free block is associated with the following advantages:

- As a result of deactivation of the mode manager, approx. 50 ... 100 µs less calculating time is required as the mode manager is not activated.
- The control sequences in the host machine controller can be simplified: it is no longer necessary to deal with the positioning control and status signals shown on sheets [809] and [810].

The disadvantages arise from the different activation methods used for synchronization and positioning and the absence of the following error and software limit monitoring (the latter can be useful with linear synchronization axes).

Differences :	Synchronization as a mode	as a free block
	Synchronization as a Positioning Mode	Synchronization as a Free Block
Parameter settings for nesting in sampling time	U953.32 = 4 U953.33 = 20	U953.32 = 20 U953.33 = 4
Relevant machine data	MD11 MD49 MD12 *) Software limit switches ... MD13 *) ... for linear axis MD15 *) Following error monitoring - in motion MD23	MD11 Linear axis/rotary axis length [836.4] MD49 Precontrol - speed [836.7] MD23 (for precontrol)
Relevant positioning control signals from sheet [809]	STA] Start (0 ⇨1 edge must be activated after power on!) **) [MODE_IN] Mode selection	---
Relevant positioning status signals from sheet [811]	[ARFD] Axis referenced [FUR_M] Virtual master running [OTR] Overtravel (with linear axis) [FWD] Axis moves forwards [BWD] Axis moves backwards [MODE_OUT] Mode checkback signal [FUR] Function running [ST_EN] Start enable	---

*) The following warnings are triggered during synchronization as a positioning mode and the axis is brought to a standstill in speed control mode via the ramp configured in MD43:
A141 = Following error - in motion (MD15)
A195 = Overtravel negative (MD12)
A196 = Overtravel positive (MD11)

**) If the start command goes to "0" during travel, the axis is brought to a standstill via the ramp configured in MD42.

Nesting the synchronization in the basic unit

The nesting of the synchronization block is independent of whether the call was made as a free block or from the mode manager of the positioning system. In the following example circuit, position sensing is performed using the motor encoder.

CAUTION

Only the signals related to synchronization are shown.

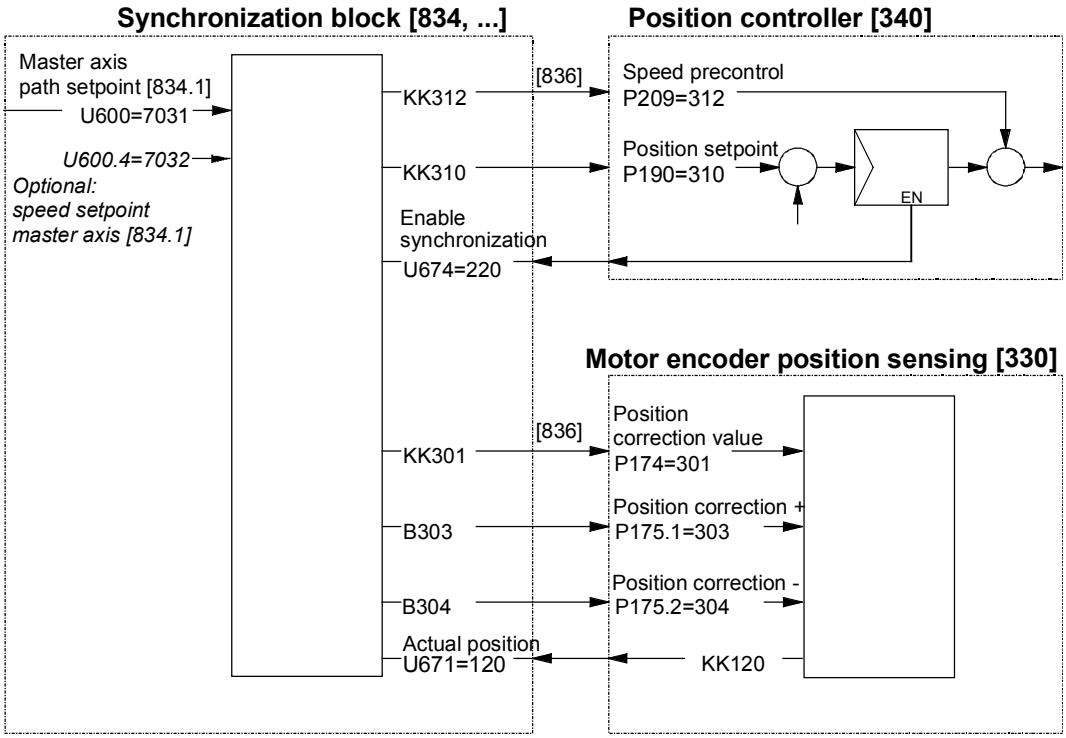

Fig. 9-30

Example

Synchronization of 3 drives with SIMOLINK.

The example shows the main application for synchronization via SIMOLINK. Drive 1 is the master drive with the virtual master axis. Drives 2 and 3 are synchronized with drive 1.

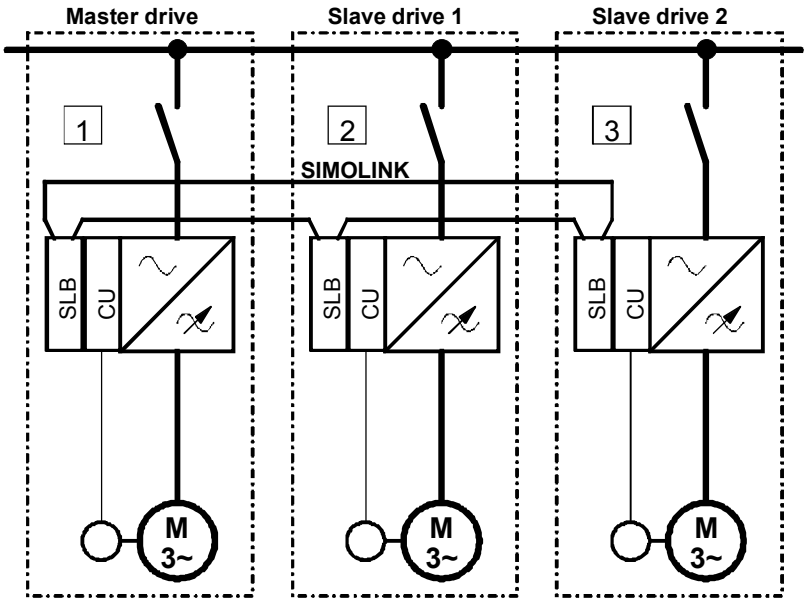

Fig. 9-31

The following rules must be followed during configuration:

- One of the axes is defined as the master drive.
- The master drive must also be the SIMOLINK master (dispatcher). The module address is zero.
- The virtual master axis is enabled [823] on the master drive.
- All drives, including the master drive, move in synchronism with the virtual master axis [832].
- The output of the virtual master axis is wired to the SIMOLINK send block [160].
- The input of the synchronization block is connected to the receive block of the SIMOLINK, **including for the master drive**.

The graphic below illustrates the path of the master value of the virtual master axis, and the controller structure.

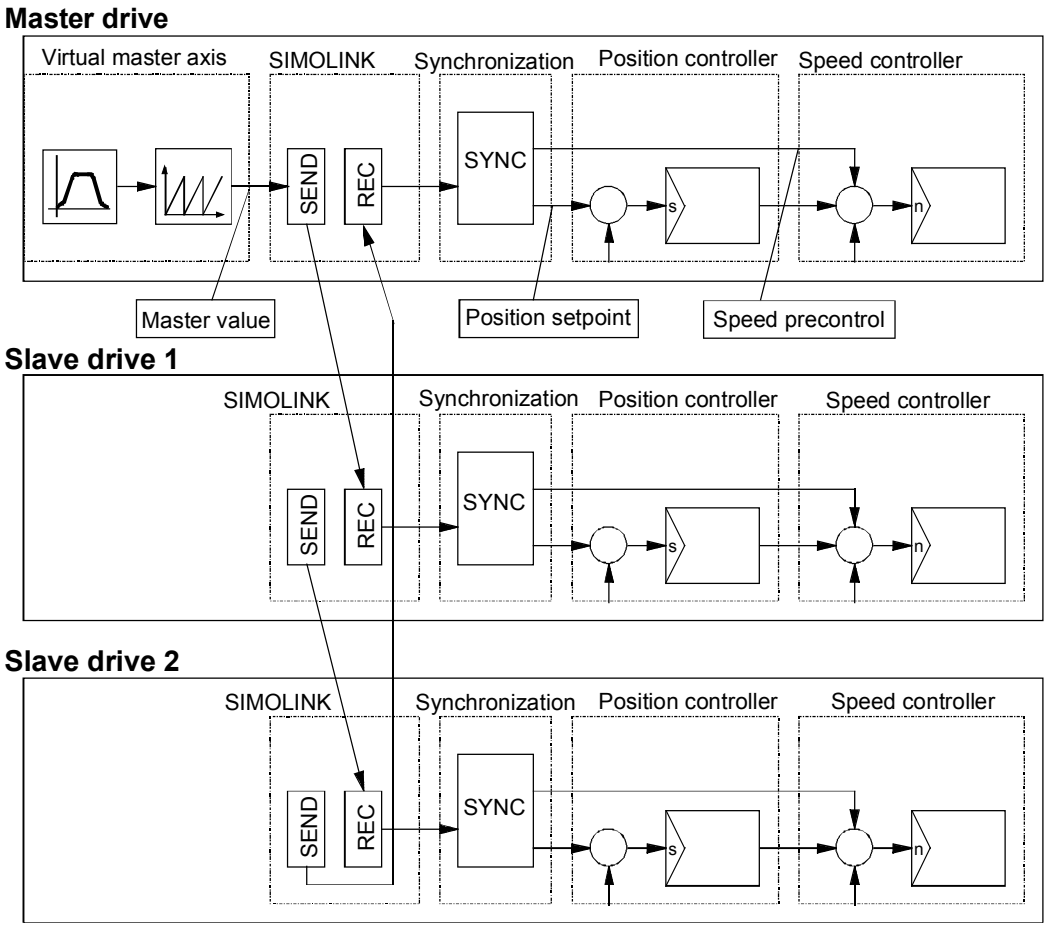

Fig. 9-32

Setting information for SIMOLINK [140...160]

The SIMOLINK cycle time in P746 should be set to the sampling time of the synchronization block, e.g. to 3.20 ms if the synchronization is nested in sampling time T4 with 5 kHz clock frequency (e.g. U953.33 = 4).

NOTE
Start position for synchronization

If you want to start synchronization with a defined start position, you must first approach the position in a positioning mode and stop the drive at this point. You can then start the synchronization, commencing with speed "0".

The "offset setting" [841] also allows you to perform the orientation on-the-fly with reference to a synchronization marker after starting the synchronization mode.

Basic Settings of the Synchronization Block

The following section describes the settings relating to all synchronization functions.

Master path setpoint U600.01-03 / U606

Parameter U600 [834.1] can be set to predefine 3 sources as the master setpoint of the synchronization block. Parameter U606 can be used to select one of these three sources. These can be:

- The output of the virtual master axis
  Output connector K817 [832] of the virtual master axis is wired to a SIMOLINK send word for the slave drives. The connection to the synchronization block should always be routed via the receive buffer of SIMOLINK, even for the master drive (e.g. KK7031 [150.7]) and not directly from the virtual master axis. You should not therefore use KK817. This ensures that the master drive receives its path setpoint from the virtual master axis at the same time as all the slave drives.
- Position sensing output as real master
  For synchronization with a real master, the measured actual position is wired to the input of the synchronization block. The position can be transmitted from SIMOLINK or a position sensing system.

Master speed setpoint U600.04-06

It is possible to connect the speed setpoint as well as the position setpoint. Connecting the speed setpoint will increase the accuracy of the speed precontrol signal (KK312). If it is not connected, the speed is calculated internally from the position setpoint and the quality of the signal will depend on the set resolution. For this reason, the speed input should always be used for synchronized applications with high accuracy requirements. In such cases, it is important that the speed acting as the master setpoint of the synchronization block is produced as a percentage value [%] by the same setpoint source as the position setpoint in length units [LU].
For this purpose, it is imperative to parameterize the scaling rate master (U607.2).

Axis cycle AZL

Parameter U601 [834.2] must be set to zero for linear axes, i.e. for drives with an infinite traversing range.

In the case of rotary axes, the cycle length matches the product length (e.g. packaging machines).

When there is no fixed product length, e.g. on continuous rollers, the axis cycle can be freely defined, in which case it is normally set to match the positional difference corresponding to one motor or roller movement.

When the virtual master axis is used, its cycle length must be specified.

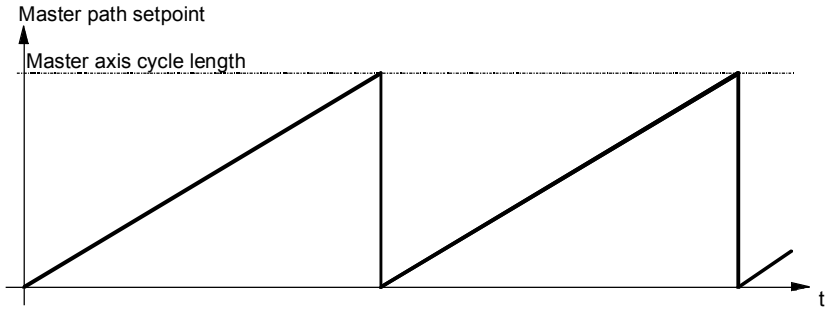

Fig. 9-33 Master axis cycle U601

Slave axis cycle U501.11 (MD11)

The above description for the master axis cycle applies analogously to the slave axis cycle [836.6]. The axis cycles for the master and slave can be set to different values.

Synchronization mode U602 U656

Synchronization mode [834.5] defines whether the synchronization block operates in

- Continuous cycle Value = 0
- Engaging cycle Value = 1
- Disengaging cycle Value = 2
- Uncoupler Value = 3

The cycle can be set by parameter or binector. Parameter U656 defines the binectors for the switchover.
If the catch-up is used here, it is imperative to parameterize the scaling rate master (U607.2). If the catch-up is selected as operating mode, the catch-up on FP 836.2 is inactive. It can only be used once (either FD 834 or FD 836).

Synchronization function U603 U657

The synchronization function [835.6] defines whether the synchronization block operates with

1:1 synchronization	Value = 0
Gear synchronization	Value = 1
Cam	Value = 2

The function can be set by parameter or binector. Parameter U657 defines the binectors for the switchover.

9.4.29 Virtual Master Axis [832]

You will find detailed information on the virtual master axis in "Configuring and Testing the Virtual Master Axis" in the section entitled "Commissioning the Technology".

If the machine speed is to be specified as a percentage value (not in LU), it is recommended to use the comfort ramp-function generator in the free blocks [790], which produces very accurate speed and acceleration precontrol values (KK571 and KK572). From software release V1.3 and higher, a special position integrator is provided in the function diagram sheet [791] for implementing a virtual master axis using the comfort ramp-function generator. If these two function blocks are used connected in series, the virtual master axis shown on sheet [832] is no longer required.

Integrator for the virtual master axis using the comfort ramp-function generator

A special integrator is provided in the free blocks in function diagram sheet [791] for implementing a virtual master axis using the comfort ramp-function generator [790].

9.4.30 Real Master with Deadtime Compensation [833]

Preferably, the virtual master axis should be used as the master value source for synchronization ([832] or [790]+[791]). In principle, this results in the most calm control behavior and the highest possible accuracy – also in dynamic operation – due to identical deadtimes for all axes during master value and position actual-value sensing.

However, it is often not possible to use a virtual master axis as the master value has to be read in via an external master value generator attached to an upstream machinery component, which already exists (motor encoder or built-on encoder).

In this case, the "Real master with deadtime compensation" function block is used – both on the drive in which the master value generator is evaluated and in the downstream drives to which this master value is forwarded via SIMOLINK.

First of all, the input position value from the position encoder (or from SIMOLINK) is limited to the axis cycle length, which can be set via U425. The position actual value normally reaches the position controller via the signal path of the synchronization block later than the position actual value of the dedicated axis generated directly in the fast position controller cycle. The deadtime resulting in this case is normally particularly large for such drives, which receive this master value via SIMOLINK. The deadtime compensation U424 ensures that this deadtime is compensated for by adding a corresponding "advance distance lead" to the master value. The distance lead is speed-dependent: the higher the speed, the greater the distance the material covers within the deadtime.

The speed value on which this is based can be gained by differentiating from the master value or can be directly picked up from the position sensing of the external master value generator, whereby preference is given to the latter signal. An unsmooth speed signal can be smoothed via U427, whereby the set smoothing time constant results in a higher deadtime to be compensated.

For this purpose, the drive is accelerated to two different speeds. The positional change is calculated through measurement of zero pulses or printing index.

$$s_{Positionalchange} = s_2 \_\_\_\_\_ - s_1 \_\_\_\_\_ = \_\_\_\_\_ [LU]$$

$$v_{Change} = v_2 \_\_\_\_\_ - v_1 \_\_\_\_\_ = \_\_\_\_\_ LU/min$$

$$t_{Deadtime} = \frac{s_{Positionalchange\,[LU]}}{v_{Change\,[LU/ms]}} - 1 = \_\_\_\_\_ [ms]$$

9.4.31 Engaging/Disengaging Cycle [834]

📖 You will find detailed information on the engaging/disengaging cycle in the "Synchronization Functions" chapter of the Function Description in manual /1/.

In the "Application Areas" section you will find an example application for the engaging/disengaging cycle. The following section provides a brief overview of the function.

The engaging/disengaging cycle is similar to the engaging/disengaging of a mechanical coupling at an accurately defined position. The graphic below illustrates the sequence of an engaging or disengaging cycle [834].

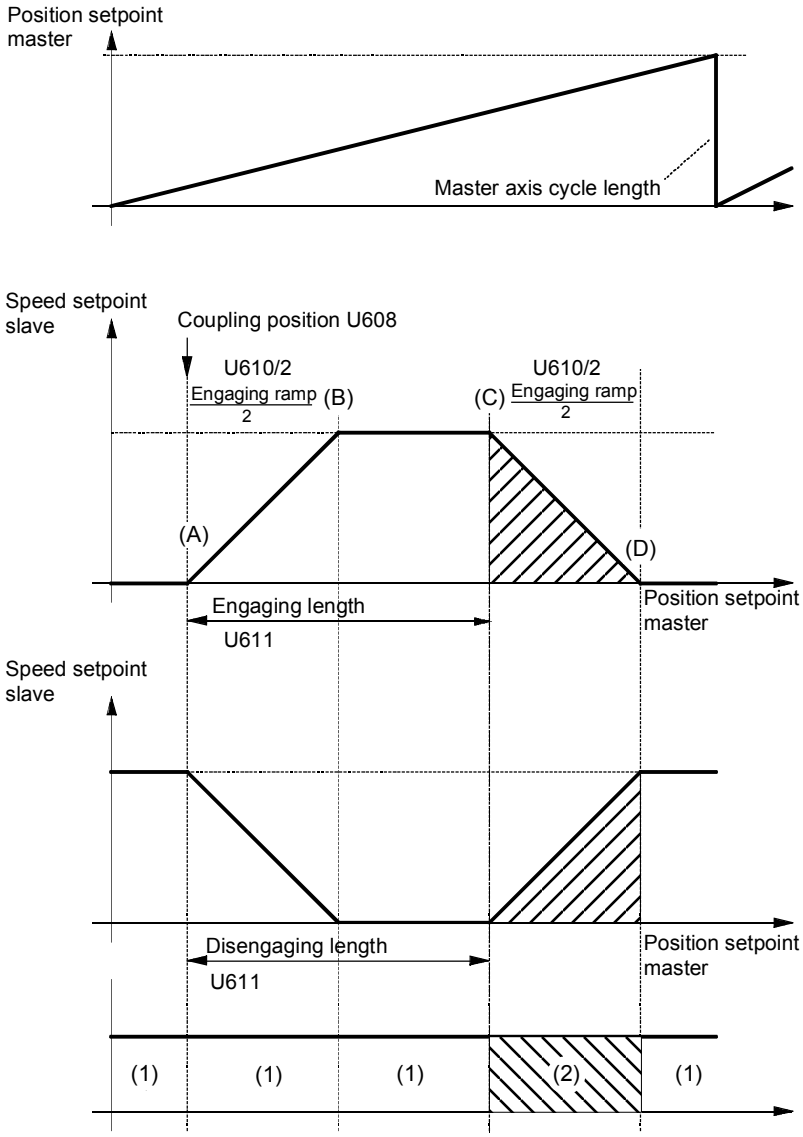

Fig. 9-34

If the engaging/disengaging cycle is enabled in the (1) zones, the engaging/disengaging cycle is started the next time the coupling position is crossed.

The operating principle described below for the engaging cycle also applies to the disengaging cycle.

When coupling position (A) is crossed, the drive accelerates via the ramp. Synchronism with the master is reached at point (B), by which time the master has traveled half of the engaging/disengaging ramp length configured in U610 [834.4]. At point (C), the drive starts its deceleration ramp, finishing at point (D).
In zones (A) to (D), the master has covered the "on" length.

Engaging/ disengaging cycle enable U612

Enabling of the engaging/disengaging cycle is either edge-triggered or initiated by a static signal. The source of the enable signal can be selected with U612.01 (static signal) or U612.02 (once-off enabling by edge triggering) [834.2].

Static engaging/ disengaging cycle enable U612.1

With the static enable (continuous enable), the engaging/disengaging cycle continues to operate as long as the signal is active.

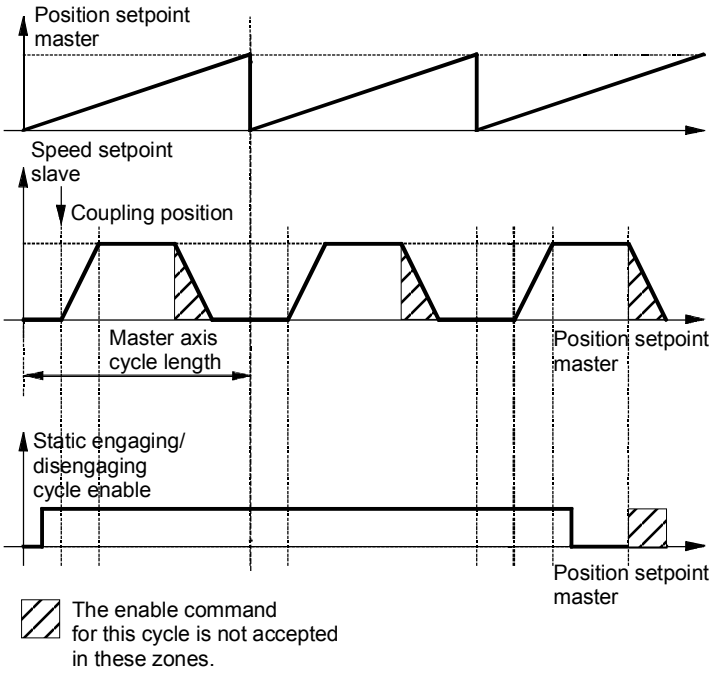

Fig. 9-35 Example: engaging cycle for rotary axis

If the enable is initiated in the shaded areas, it is no longer accepted for this cycle.

Exceptions

If the engaging length is greater or equal to the master axis cycle length, the drive switches to constant synchronization after it has crossed the coupling position with a continuous enable signal applied.

Example:

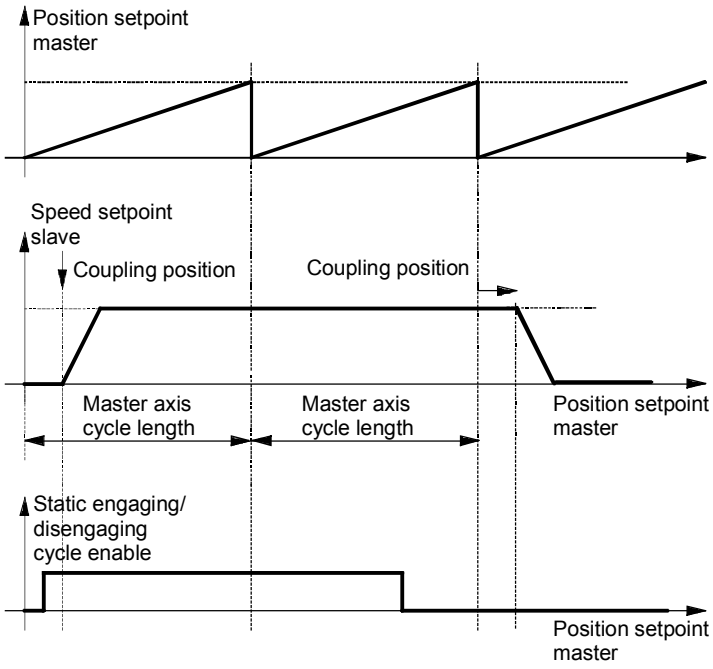

Fig. 9-36

Reversing with the engaging/disengaging cycle:
The coupling position initiates the engaging process again.
Exception: If the master setpoint is reversed during engagement, the engaging cycle will stop again at the coupling position.

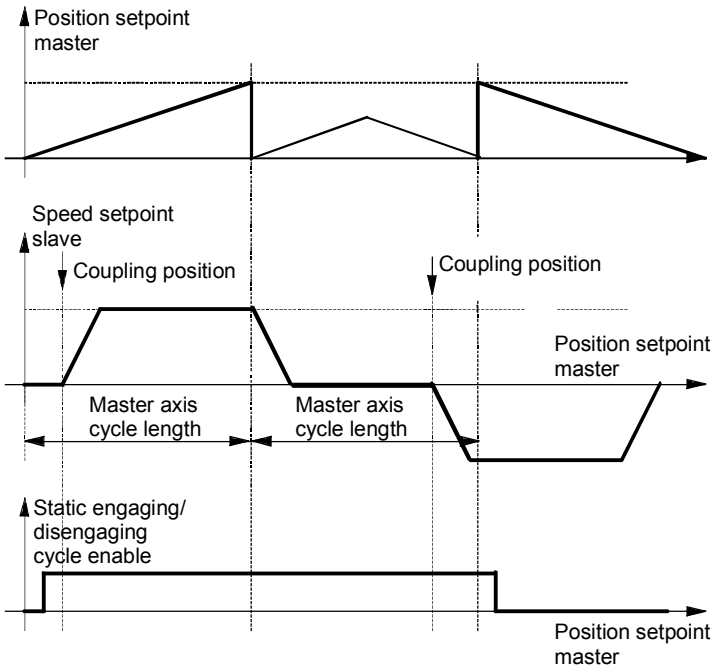

Fig. 9-37

Engaging/ disengaging cycle once-off enable U612.2

A positive edge of the once-off enable signal enables the engaging/disengaging cycle for one operation.

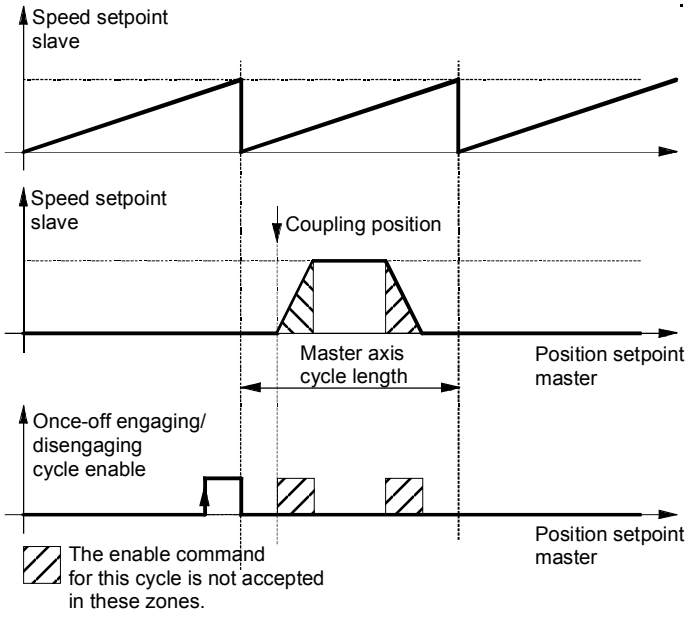

Fig. 9-38

Retriggering

If an edge is applied to the enabling input outside the shaded areas, the engaging/disengaging cycle is retriggered for another run.

If the engaging cycle is retriggered within the permissible time period, it operates as if statically enabled for the engaging length according to the number of times the retrigger edge is applied.

Example:

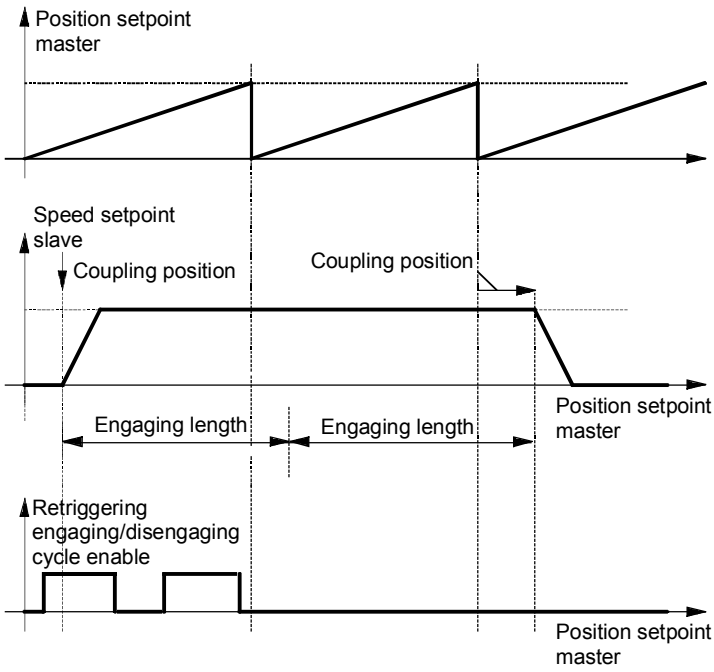

Fig. 9-39

9.4.32 Gearbox Function [835]

The gearbox function [835] allows a transmission ratio to be set between the master and slave axis. The transmission ratio is a fraction.

$$\text{Transmission ratio} = i = \frac{\text{Numerator}}{\text{Denominator}}$$

Example: $i = \frac{1}{2}$: U604.1 = 1, U604.2 = 2

The slave axis traverses at half the velocity of the master axis.

The transmission ratio can also be changed in motion. If you want to avoid jumps in the transmission ratio, you can control the transmission ratio (numerator or denominator) using the simple ramp-function generator [791] in the free blocks.

You will find detailed information on the gearbox function in the "Synchronization Functions" chapter of the Function Description in manual /1/.

9.4.33 Generation of the Position Setpoint [836]

Before the position setpoint is output, the signals from synchronization and displacement (offset) angle adjustment (V_displacement, [841]) and of catch-up [837] are switched in. The resulting speed setpoint is integrated up to the slave position setpoint in the "ACL integrator" with limitation in the case of a rotary axis to the slave axis cycle length parameterizable via MD11. The corresponding corrective actions are also initiated for the position actual value via KK301 and B303/B304.

A speed precontrol value is available at KK312. It can be switched in downstream of the position controller to reduce the dynamic tracking error.

9.4.34 Catch-up Function [837]

The catch-up function enables a drive to be coupled up to and uncoupled from a synchronization system. The uncoupled drive can be operated autonomously at local speed and can be halted at an accurate position.

Uncoupling an axis

Using the "Uncouple/Stop" = 1 command it is possible to decouple an axis from a synchronization system. The axis then reduces its speed via a ramp to the "catch-up setpoint speed", which can be preset via U626.01 in the unit [10 LU/min] or via U626.02 as a percentage. The deceleration of the deceleration ramp can be set in U628.1, and the rounding of the same in U627.1. It is possible here to directly influence the internal ramp or rounding via the "Mode" command, with and without internal ramp, via any setpoint source without applying the internal rounding.

Halting an axis at a defined position

The "Enable positioning" command can be used to stop the axis at a setpoint position that can be parameterized in U626.03. However, the drive initially travels at "catch-up setpoint speed" until the halt position can be approached with the ramp, which is parameterizable in U628.3 without having to change the sense of rotation. When the factory setting value -1 is selected, the ramp of index 1 is applied.

If the "Enable positioning" command is canceled, the axis can be made to exit the halt position again and to accelerate up to "catch-up setpoint speed" by setting the acceleration in U628.4 (see the broken-line acceleration curve in [837]). In this instance as well, a factory setting value of -1 causes the ramp of index 2 to be applied.

Furthermore, the "Trigger positioning" command can be used to start the position controller and perform a new positioning operation.

The shutdown position is then approached either in "relative mode" within one revolution (axis cycle compensated) or in "absolute mode" via several axis cycles.

Coupling up an axis By canceling the "Uncouple/Stop" command, it is possible to recouple a stationary axis or axis operating with "Setpoint speed uncoupler" into a synchronization system. The axis accelerates to the machine speed set by the master via an acceleration ramp. The acceleration of this ramp can be set at U628.2, and the rounding thereof at U627.2.

Once speed synchronization has been achieved, the binector B820 "Catch-up finished" goes to "1". This binector is usually controlled with the "Synchronize to master value" input [841.2] in order to now create accurate angular synchronization with the master.

9.4.35 Cam [839]

You will find detailed information on the electronic cam (table synchronization) in the "Synchronization Functions" chapter of the Function Description in manual /1/.

The cam [839] allows free assignment of master and slave positions. This allows you to define the sequence of movements on the slave axis with reference to the master.

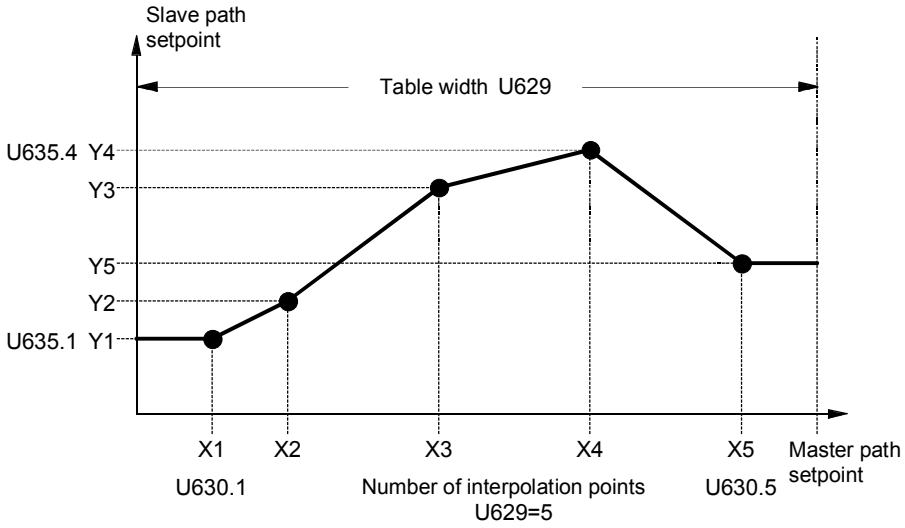

Fig. 9-40 Example of a cam with 5 interpolation points

Linear interpolation is performed between the interpolation points, i.e. a straight line is generated. Y1 is output for values less than X1 (horizontal movement to zero), Y5 is output for values greater than X5 (horizontal movement up to the table width).

Table configuration U615

A total of 400 table interpolation points can be defined [839.6]. These can be used in one large table or several small ones.

U615 = 0	One table with max. **400** interpolation points	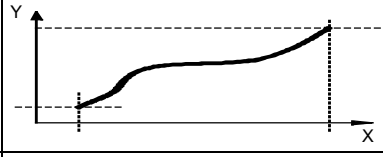
U615 = 1	Two tables with max. **200** interpolation points each	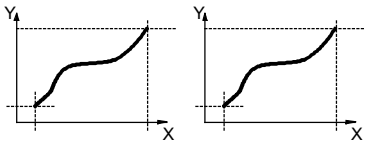
U615 = 2	Four tables with max. **100** interpolation points each	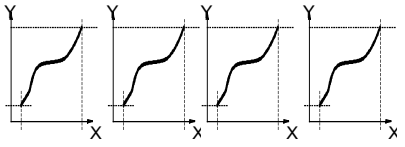
U615 = 3	Eight tables with max. **50** interpolation points each	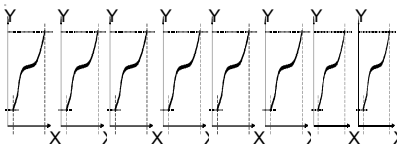
U615 = 4	Variable involving a maximum of eight tables with a total of **400** interpolation points	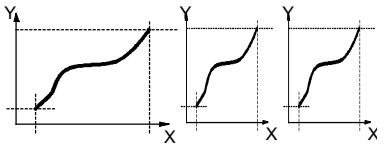

CAUTION

Note E^{2}PROM capacity, not all interpolation values will be stored!

Owing to the different sizes of E^{2}PROM, not all nine interpolation values will be stored in the E^{2}PROM.

The large E^{2}PROM is capable of storing all interpolation value parameters.

The small E^{2}PROM can store only the parameters of interpolation values that were available in versions <1.4x, but the parameters of new values are stored only in the RAM.

Variable table configuration (U615=4)

The size and number of tables can be configured variably with this option.

A maximum of 8 tables for a total of 400 interpolation values are available.

You are not then limited to the fixed table configurations with 50, 100, 200 or 400 interpolation points with which you must use either 1,2,4,8 tables. With this option, for example, you can configure 5 tables with 80 interpolation points, or 3 tables with 200 interpolation points stored in one and 100 points in each of the other two.

You can allocate the number of interpolation points to be stored in each table

Number of interpolation points: U629.1 to U629.8 for tables 1-8

It is possible to keep track of the number of interpolation points still available in the visualization parameter.

Number of available interpolation points: n634 (1....400)

NOTE

The tables must then be stored one after the other with no gaps!

The tables are no longer stored in parameters in fixed increments of 50 points, but the Table Info viewing parameter provides a useful guide to their configuration since it is automatically calculated after the interpolation points for the tables have been entered.

Table Info displays the initial and end parameters for each table.

Meaning of Table Info (n639.x):

X	H	Z	E
No meaning	1 = U630 2 = U631 3 = U640 4 = U641 5 = U632 6 = U633 7 = U642 8 = U643	Index 1 to 50	

Example: 5 tables with 80 interpolation points:

Indices 1 to 5 in "Number of interpolation points" are set to 80.

Table Info now displays the allocation of interpolation points to individual tables:

Table begins			**Table ends**		
Table Info		**First interpolation point in parameter**	**Table Info**		**Last interpolation point in parameter**
n639.01	101	U630.01	n639.02	230	U631.30
n639.03	231	U631.31	n639.04	610	U633.10
n639.05	611	U633.11	n639.06	340	U640.40
n639.07	341	U640.41	n639.08	720	U642.20
n639.09	721	U642.21	n639.10	850	U643.50

Example of variable point allocation among tables:

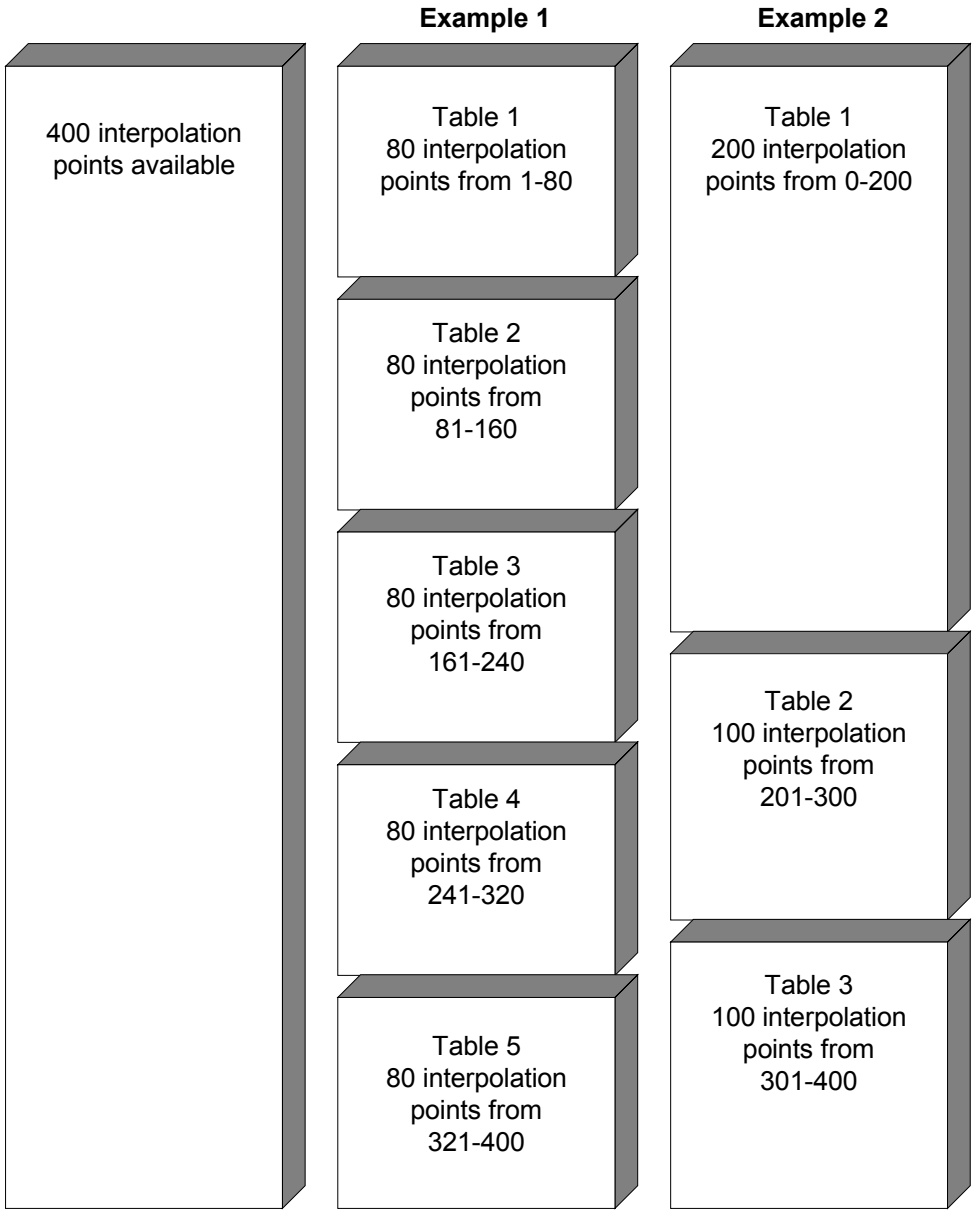

Table input / table check

The following sequence must be followed when entering the cam:

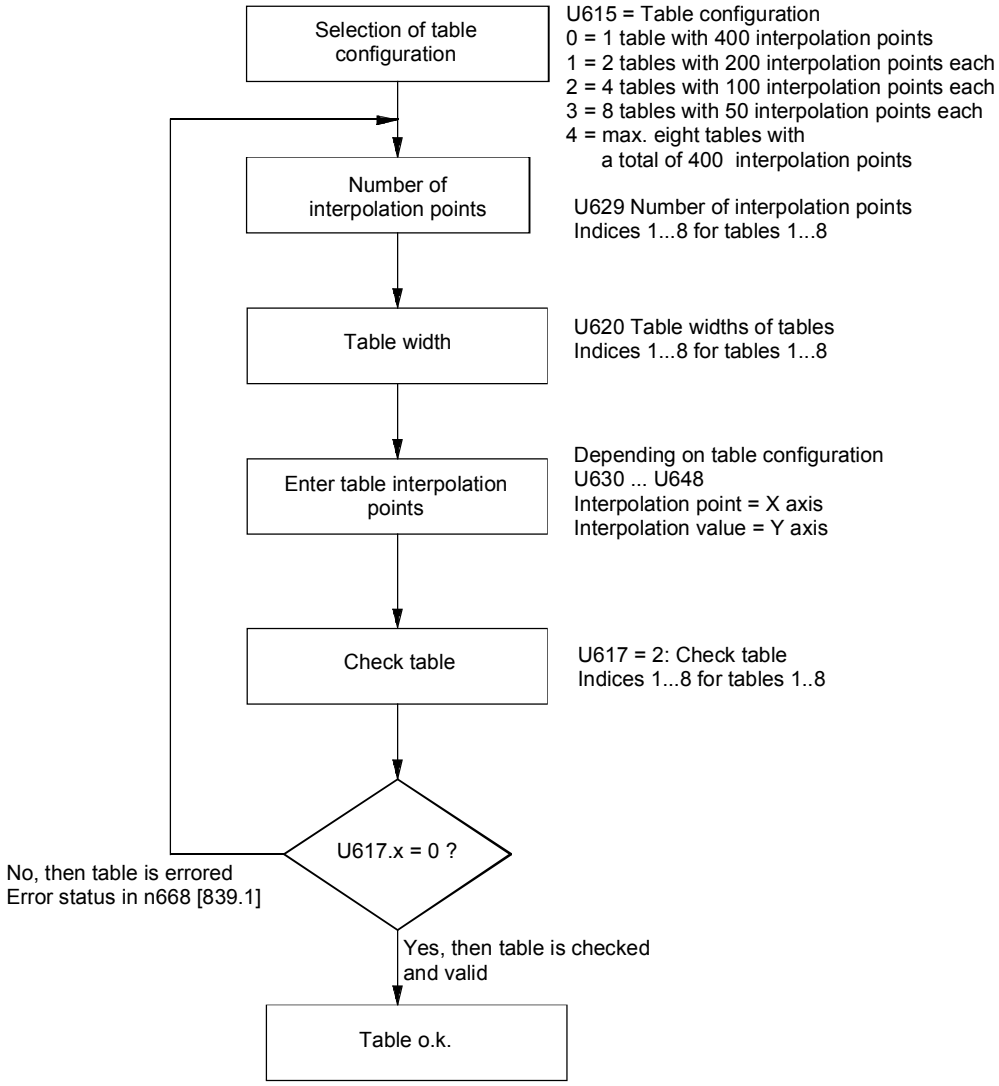

Fig. 9-41

NOTE

The interpolation points (x coordinates) must be defined in ascending order.

Only interpolation points within the range from 0 to the table width are allowed.

Interlocks in tables:

An active table cannot be changed at all. Except for table width and number of interpolation points, an inactive table can be changed, checked and accepted as a background function. The operating mode must otherwise be switched over to 1:1 or gearbox.

Table interpolation modes U616, U614

The following table interpolation modes can be defined [839.5]:

U616 = 0xxx	**Without scaling of y axis:** The y coordinates are output 1:1.
U616 = 1xxx	**With scaling of y axis:** The y coordinates are multiplied by the scaling factor of the y axis. This is composed of the ratio of U651.1 (numerator) and U651.2 (denominator).
U616 = x0xx	**Without scaling of x axis:** The direct input value is the x coordinate value of the cam.
U616 = x1xx	**With scaling of x axis:** The input value of the table is multiplied initially by the scaling factor of the x axis. This is composed of the ratio of U623.1 (numerator) and U623.2 (denominator). The scaling of the x axis has the same effect as a gearbox upcircuit of the cam.
U616 = xx0x	**Continuous output:** With continuous output, there is a return jump to the start of the table when the end of the table is crossed (rotary axis).
U616 = xx1x	**Stop at end of table:** In this mode, the output value is frozen at the last interpolation point when the end of the table is crossed. The return jump to the start of the table takes place after external synchronization through the binary "table synchronization" signal.
U616 = xxx0	**Absolute table output:** The absolute interpolation point is output on the return jump to the start of the table. If the interpolation point at the end of the table is not equal to the interpolation point at the start of the table, a jump takes place.
U616 = xxx1	**Relative table output** On the return jump to the start of the table, the table continues with reference to the last interpolation point. Example 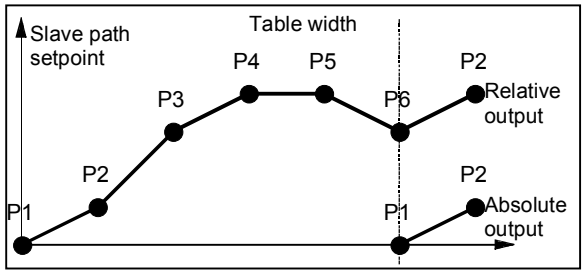
U616 = xxx2	Table change relative (without a jump), otherwise absolute table output functionality (U616 = xxx0).
U616 = xxx3	Table change relative (without a jump), otherwise relative table output functionality (U616 = xxx1).
U614 = 1	**Accept Scaling** **0 =** Scaling is active all the time, a change to the scaling causes a jump. 1= Scaling is activated in response to positive edge of binector U621 SYNT or a table overflow (return jump to start of table), the jump is initiated by the user or the end of the table.

9.4.36 Synchronization to master value [841]

With "Synchronization to master value", the zero position of the slave axis is synchronized once to the zero position of the master axis via a parameterizable compensation movement.

A 0 ==> 1 edge of the "Synchronize to master value" command triggers synchronization. The currently present master value is converted once over the entire synchronization path. After that, the position difference Δs_Master_Slave to be corrected between the master and the slave is calculated from the thus determined master position setpoint, the current displacement setpoint (KK812 [841.8]) and the currently applicable slave position setpoint. In order to compensate for this, the axis performs a compensation movement [841.7] with an adjustable differential speed and acceleration (U691.1 and .2). The integral of the travel curve v = f(t) traversed here corresponds to the position difference that has to be corrected.

By taking the "Current displacement" into account in the calculation (841.7 ==> 841.2) it is ensured that a slave axis displacement (offset) already implemented by the displacement angle settings will remain.

The total performed position correction has the amount

Position correction = master value – position setpoint slave + displacement

i.e.

Δs_Master_Slave [841.5] = s_Master [834.3] - s_set_Slave [836.6] + Current displacement [841.8]

You can select via operating mode U699.1 whether the compensation movement of the axis is to take place in positive direction, in negative direction or via the shortest route (e.g. correction from 350° to 10° shall be effected by 20° forwards, not by 340° backwards).

You can also synchronize the two axes within a window. Synchronization within window 1 is performed via the shortest route for small, quick compensatory motions. Synchronization outside window 1, but within window 2, is performed in the parameterized direction. The axes cannot be synchronized outside window 2. The applicable synchronization mode is then checked back via binector.

Detailed information about synchronization can be found in Chapter "Synchronization Functions" in the Function Description of the Manual /1/.

9.4.37 Displacement Angle Setting [841]

Absolute displacement angle

The position of the slave axis can be corrected by a displacement value through the absolute displacement angle. This value can be preset by parameter U677 or connector (U678.01). This displacement angle acts absolutely i.e. it resets all displacement or offset movements that have been previously effected by other displacement angle settings and which have accumulated in the "Current displacement" signal [841.8].

The absolute displacement is set once in each case when the value of the "absolute displacement angle" is changed via the "Compensation movement" function [841.7] with adjustable differential speed and acceleration. In the startup process, the displacement angle is set to 0. The first change at the connector input results in a new setting of the displacement angle.

You can select via operating mode U699.2 whether the compensation movement of the axis is to take place in the specified direction (i.e. clockwise if displacement is changed to a higher value, and counter-clockwise if displacement is changed to a lower value), or via the shortest route (e.g. correction from 350° to 10°, by 20° clockwise, not by 340° counter-clockwise).

Relative displacement angle

The currently valid displacement angle can be changed via the relative displacement angle (U678.3) by the specified value. This is activated by two binectors for adjusting in the positive direction (U694.1) and in the negative direction (U694.2). The change is adopted at these control inputs with each positive edge.

The relative displacement angle Δs_relative can be greater than the parameterized slave axis length.

The displacement is set via the "Compensation movement [841.7] with an adjustable ramp and differential speed.

Inching – displacement angle

The current displacement angle can be changed via the two binectors Inching+ (U696.1) and Inching– (U696.2). The variable speed and acceleration can be set via U695.2 and .3. Adjustments can be made as long as one of the two inputs is activated. No adjustment is made if both inputs are activated simultaneously.

Non-volatile storage of the displacement angle

The resulting displacement angle is output as "modulo axis cycle length" at connector KK812, i.e. the displacement angle refers to an axis cycle. The displacement angle can be assigned to a tracking/storage element [760] for data remanence and, once the MASTERDRIVES electronics power supply has been restored, can be stored again as a set value by the tracking/storage element.

9.4.38 Position Correction [843]

Position correction enables synchronizing signals e.g. BERO proximity switches or printing indices of optical reading devices, to be cyclically evaluated during synchronization. The printing index is recorded by a fast, interrupt-capable MASTERDRIVES input and the actual position at the time of the interrupt is stored by the position sensing. If the setpoint position stored in the MASTERDRIVES at the time of the printing index does not correspond to the measured actual position, an automatic compensation movement takes place at a speed specified in U667 by means of which this deviation can be corrected.

Section 9.3.3 includes an application example for position correction under the section "Printing index control".

A position correction is normally automatically started by the "Start position correction" command when a new position measured value (i.e. a measured actual position of the printing index) has been made available by position sensing.

The following two operating modes can be set via U661:

Operating mode 1 **The axis transports the printing index:**

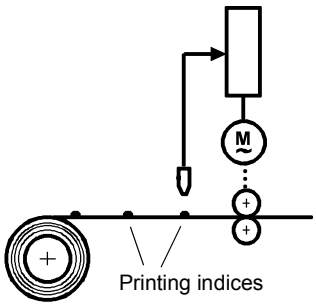

If the printing index comes too late, short-time acceleration has to take place to make up the position delay again. Beforehand, the position setpoint and actual value are set in the counter-direction in order to create the correct reference to the mechanical system.

Operating mode 0 **The axis does not transport the printing index:**

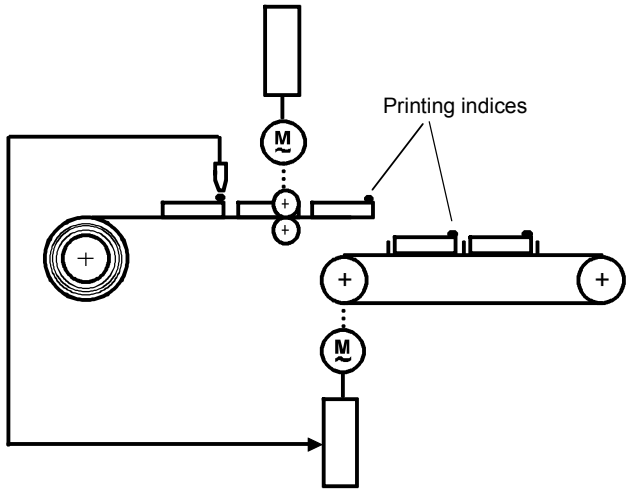

The drive being taken into consideration is normally arranged behind the drive transporting the material with the printing index (and not itself evaluating the printing index). If the printing index comes too late, the drive must brake briefly in order to "wait" for the printing index.

You will find detailed information on position correction in the "Synchronization Functions" chapter of the Function Description in manual /1/.

9.4.39 Referencing "on the fly" for synchronization [843]

The referencing "on the fly" function enables synchronization to be made "on the fly" during startup to a reference index (BERO or similar) in synchronization mode.

It is no longer necessary to approach the reference index beforehand in positioning mode and then to change over into synchronization mode from standstill.

The function is enabled via a binector (U675.2). At a positive edge of the enable signal, the output binector B808 "Referencing running" is reset. As long as the enable is active (=1), new referencing takes place with each recorded reference index. The index is recorded with the "Start position correction" input (U666).

Usually the "Start position correction" input is always made when the interrupt triggered by the reference index has resulted in a new valid position measured value.

When the reference index has been recognized, both the position actual value and the position setpoint are set to the reference position. No compensation movement takes place.

9.5 Communication with the Technology

Communication with the technology functions across serial interfaces such as

- PROFIBUS-DP [120...135]
- CAN bus [120...135]
- USS [100...111]
- SIMOLINK [150...160]

takes place using the same features as used for access to the basic unit. This applies both to the high-speed cyclic process data interface ("PZD") and the acyclic parameter interface ("PKW"). Only process data, not parameters, can be accessed via SIMOLINK.

9.5.1 Process Data Communication (PZD)

The process data interface can be used to transfer all the signals of the MASTERDRIVES MC (actual values and status bits) defined as connectors or binectors (see [125] for example: here, any connectors can be "wired" to the send message of the PROFIBUS-DP field bus using the selection parameter P734).

All send data of the host system are already defined implicitly as connectors and binectors (e.g. K3001...K3060 and B3100...B3915 from the send message of PROFIBUS-DP [120]). They can therefore be "wired through" on the MASTERDRIVES converter as setpoints and control commands.

You can set up any configuration of send and receive messages using BICO technology simply by setting the appropriate parameters, however we recommend that you normally use a permanent message assignment for the positioning and synchronization functions with 10 words each in the send and receive direction (PPO type 5 for PROFIBUS-DP). This permanent message assignment can be established quickly and conveniently with the DriveMonitor download file POS_1_1.DNL [806].

The process data interface defined using this procedure is referred to below as the "GMC interface", since it is used in the "GMC-BASIC" software of the configuring package /1/ (GMC = General Motion Control).

📖 The signals exchanged with the technology over the GMC process data interface are described in detail in the "Control and Checkback Signals" chapter of manual /1/. In the following two tables, you will find an illustration of the message format for send and receive messages:

Control signals from host system ⇨ MASTERDRIVES with the GMC interface

	7	6	5	4	3	2	1	0		Axis_n.
DBBx	RES	RES	RES	RES	RES	**LB**	RES	RES	BIN	IN_1
DBBx+1	**ACK_F**	RES	RES	RES	**ENC**	**OFF3**	**OFF2**	**OFF1**	BIN	IN_2
DBBx+2	**MODE_IN**				**J_FWD**	**F_S**	**J_BWD**	**BLSK**	BIN	IN_3
DBBx+3	**OVERRIDE**								DEZ	IN_4
DBBx+4	**PROG_NO OR MDI_NO**								DEZ	IN_5
DBBx+5	**SIST**	**RST**	**FUM**	**ACK_M**	**CRD**	**STA**	**RIE**	**TGL_I**	BIN	IN_6
DBBx+6	**R_VM**	**S_VM**	**EN_RF**	**SSC**	**OPERATION**		**FUNCTION**		BIN	IN_7
DBBx+7	**ST_VM**	**TABLE_NO**			**SYN_T**	**SST**	**ST_S**	**SET_T**	BIN	IN_8
DBBx+8	**CU_DR**	**CU_EN**	**CU_SP**	**SYNC**	**DI_RN**	**DI_RP**	**DI_JN**	**DI_JP**	BIN	IN_9_0
DBBx+9	RESERVED									IN_9_1
DBWx+10	**OPTIONAL VALUE 1 INPUT**									IN_9_2
DBDx+12	**OPTIONAL VALUE 2 INPUT**									IN_10
DBDx+16	**OPTIONAL VALUE 3 INPUT**									IN_11

The first data word (Dbx, Dbx+1) is reserved for control word 1 of the MASTERDRIVES basic unit [180]. The other words are technology-specific.

Checkback signals from MASTERDRIVES ⇨ host system with the GMC interface

	7	6	5	4	3	2	1	0		Axis_n.
DBBy	RES	RES	RES	RES	**OTM**	**OTC**	**OLC**	**S MAX**	BIN	OUT_1
DBBy+1	RES	**WA RN**	**OFF3**	**OFF2**	**FAU LT**	**IOP**	**RDY**	**RTS**	BIN	OUT_2
DBBy+2	**FAULT_NO**								DEZ	OUT_3
DBBy+3	**WARN_NO**								DEZ	OUT_4
DBBy+4	**STR_ M**	**ARFD**	**FUR_ VM**	**OTR**	**FUT**	**BWD**	**FWD**	**DRS**	BIN	OUT_5
DBBy+5	**M_NO_1**								DEZ	OUT_6
DBBy+6	**MODE_OUT**				**FUR**	**ST_ EN**	**T_R**	**TGL _O**	BIN	OUT_7
DBBy+7	**M_NO_2**								DEZ	OUT_8
DBBy+8	**CU_ TE**	**CU_ VR**	**CU_ PR**	**SYNC**	**DI_A**	**POS_ A**	**CL_A**	**VM_ RA**	BIN	OUT_9_0
DBBy+9	RESERVED									OUT_9_1
DBWy+10	**OPTIONAL VALUE 1 OUTPUT**									OUT_9_2
DBDy+12	**OPTIONAL VALUE 2 OUTPUT**									OUT_10
DBDy+16	**OPTIONAL VALUE 3 OUTPUT**									OUT_11

The first word is reserved for status word 1 of the MASTERDRIVES basic unit [200]. The second word is assigned to the fault/warning number KK250 [510]. The remaining words are technology-specific.

The tables above show the data block addresses as implemented with the SIMATIC-S7 "Motion Control Configuring Package" software /1/. The message assignment shown is equally suitable if you do not use the configuring package, but only use the DVA_S5 and DRIVE ES SIMATIC block packages or a bus other than PROFIBUS-DP (USS, CAN bus, etc.).

Configuration and starting of traversing operations in positioning and synchronization mode via a serial interface is simple and convenient, thanks to the clearly defined message format. It is possible, for example, to define a positioning offset with a single message ("MDI block") (in the "Optional Values") and to start the movement simultaneously with the start command [STA]. The complete traversing operation is then performed automatically without further intervention from the host controller. At the end of the traversing operation, the axis returns a checkback message indicating that the target position has been reached ("destination reached, axis stationary" status bit [DRS]). This naturally applies not only to PROFIBUS-DP, but also to other field buses (CAN bus, USS, etc.).

9.5.2 Parameter Transfer (PKW)

Every setting and display parameter of the MASTERDRIVES MC can be read and modified over a serial interface – with the exception of SIMOLINK – including all the technology parameters.

📖 The methods used for PKW access are described in detail in the "Communication" section of this Compendium.

Cyclical services

Only one parameter can be accessed in a message frame. It is not possible to access a new parameter until the old parameter access is complete ("handshake method").

Acyclical services

The new PROFIBUS-DPV1 services and USS protocol also allow access to all the indices of a parameter in a "long message" (see below).

When transferring parameters, it should be noted that the U and n parameters used for the technology are addressed with a "1" in the most significant bit (bit 15) of the index word.

Example:

Access to U551 => Parameter number in parameter identifier word = 551

Bit 15 in index word with DPV1 and USS
or
Bit 7 with cyclical PROFIBUS services
} =1 (PARA PAGE SELECT bit)

9.5.3 Standard Function Blocks for PROFIBUS-DP and USS

As you can see in tables /3/ and /4/, a solution for connecting to MASTERDRIVES via PROFIBUS-DP and USS is available for almost every SIMATIC S5 and S7 system.

Function block packages DVA_S5 /3/ and Drive ES SIMATIC /4/, which are available for this purpose, enable convenient access to the process data and parameters of the MASTERDRIVES from the perspective of the SIMATIC application programmer.

The control and checkback signals (e.g. in the standard message assignment specified above) are stored in convenient packages in data blocks for each drive axis.

PROFIBUS-DPV1 services

The SIMATIC-S7 CPUs with integrated PROFIBUS interfaces (see table /4/) also support communication with MASTERDRIVES using the new PROFIBUS-DPV1 services. The DPV1 services allow parameter transfer to the drive in long messages: all indices of a parameter are transferred in a single PROFIBUS message frame. This allows, for example, the transfer of a cam table with 100 interpolation points (= 200 double words) in seconds, in 4 instead of 200 messages.

9.5.4 Additionally Available SIMATIC S7 Software

Standard function blocks DVA_S5 and Drive ES SIMATIC mentioned above allow you to access all the positioning and synchronization functions of the MASTERDRIVES MC - with one exception: a solution has not yet been released for the definition of automatic programs.

If you want to

- Download new cam tables onto the MASTERDRIVES MC on a frequent basis, e.g. on a product change
- Define extensive automatic programs
- Access preprogrammed OP screens and
- Are prepared to invest extra time for familiarization

the following 2 components are available for the total integration of MASTERDRIVES MC with distributed technology in a SIMATIC S7-300/400 programmable controller system (further information is provided in manual /1/ and Catalog LS01):

- **SIMATIC S7 "Motion Control Configuring Package" software on CD-ROM (included in /1/):**
  This software package for the SIMATIC S7-300 and S7-400 includes software for PROFIBUS-DP communication between the S7 user program and the technology across a clear, easy-to-handle data interface. The structure of the communication interface to the technology is illustrated in the following figure:

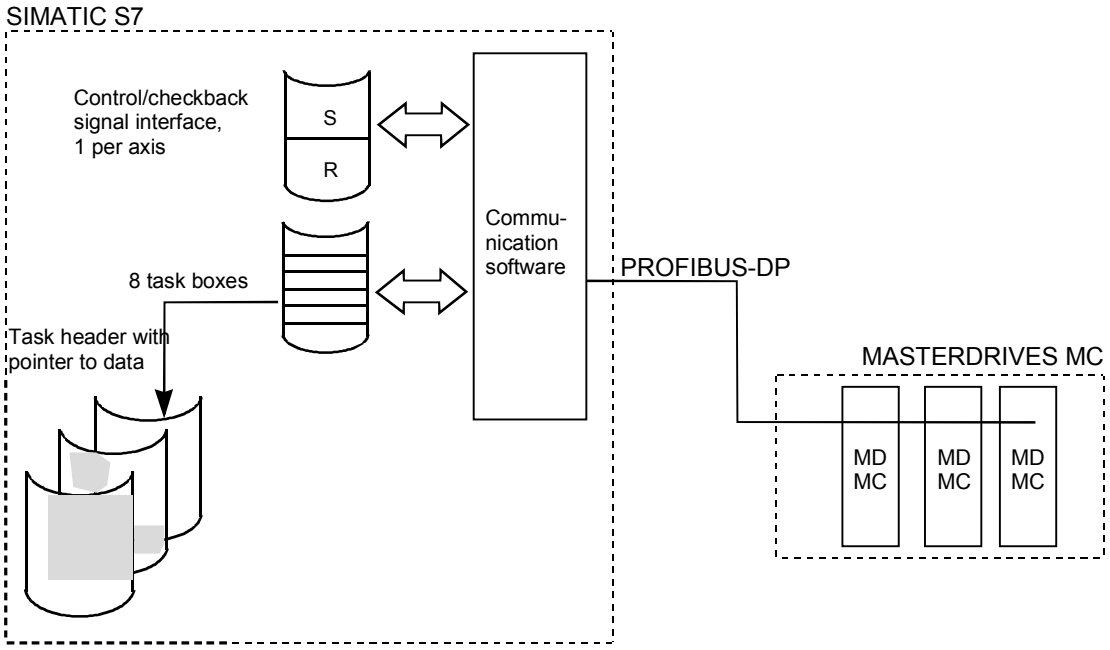

Fig. 9-42 Communication Interfaces from GMC-BASIC to Technology

- The configuring package offers the following advantages:
  - Transfer of control/checkback signals to technology (one data area per axis)
  - Task interface for definition of MDI and automatic NC blocks and programs, in addition to transmission ratios, cam tables, etc.
  - The task concept is largely identical to the system used on the SIMATIC WF721/723 positioning modules.
  - The communication software provides the user with 8 task boxes in which he can enter the tasks. These are executed automatically and enable superior structuring of the user program.
  - A task comprises a task header, with the necessary control information, and a pointer to the actual user data.
  - Resources such as an OP25 operator panel, a STEP 7 program or a SIMATIC PG programming device can use the task interface.
- **Motion Control HMI Package for SIMATIC S7 (see /2/):**
  Software for the application interface to operator/touch panels OP25, OP27, OP37, TP37 etc. with standard screens for operating the positioning axes, including the following functions:
  - Block and automatic NC program input
  - Input of machine data and cam tables
  - Diagnostic screens with definition/display of control and checkback signals

📖 In manual /1/ you will find detailed descriptions of the configuring package and HMI package.

9.5.5 USS Interface

The MASTERDRIVES MC compact PLUS units have one USS interface; the compact and rack-mount units have two. The USS interface is the preferred interface for connecting the OP1S plain text servicing unit or a servicing and commissioning PC with the DriveMonitor service program. In applications where the transmission rate is not critical, the USS interface can also be used as a low-performance field bus.

USS has the following features:

- The logical message contents are basically identical to the PROFIBUS-DP message contents. Point-to-point connection (max. 15 m) via RS232 or
- Network connection via RS485 with up to 32 stations (max. 1000 m)
- Baud rate adjustable from 300 . . . 38400 baud (with additional modules up to 187.5 Kbaud)
- Simple, high-performance protocol with only 4 bytes overhead. You will find a specification of the USS protocol in the "Communication" chapter of this Compendium.
- **Every** MASTERDRIVES, SIMOREG and MICROMASTER converter has at least one USS interface as standard.
- User data:
  - All setting and diagnostic parameters are accessible; up to 200 bytes of parameter data can be transmitted in one message (one parameter or all indices of a parameter).
  - Up to 16 words of process data (setpoints/actual values, control/status bits)
- Where the network polling time is not critical, the USS can be used as a low-cost field bus.
- A USS interface and drivers are available for almost every SIMATIC S5/S7 CPU and PC interface (see /3/ and /4/).
- The USS is suitable for the connection of Siemens power converters to third-party PLCs, PCs or customized automation systems.
- The network polling time for a USS bus operated at 19.2 Kbaud with 10 drives connected to an S7 with CP340: approx. 650 ms (with 6-word message frames, 4 words of parameters and 2 words of process data).

9.5.6 SIMOLINK

The SIMOLINK drive interface is the "backbone" of the synchronization function. SIMOLINK distributes path/angle setpoints and velocity setpoints from the master axis to the slave axes quickly and time-synchronously. The synchronization of the sampling times of all stations is assured by special SYNC messages.

📖 The "Communication" chapter in this Compendium provides detailed information on the configuration and commissioning of SIMOLINK.

The list below provides a brief overview:

SIMOLINK has the following features:

- Fiber-optic ring with plastic or glass fiber
- Baud rate 11 Mbaud
- Max. 200 nodes per fiber-optic ring
- Polling time with 100 data messages each with 32 bits: 630 µsec
- Jitter-free synchronization of the sampling times of all stations by special SYNC messages
- Peer-to-peer configuration (drive-to-drive interface without master) or master/slave configuration possible
- Max. cable length:
  - 40 m with plastic
  - 300 m with glass
  - 1000 m for complete ring
- Up to 1000 double word message frames can circulate on the SIMOLINK ring.
- Binectors and connectors allow flexible wiring of signals from and to the SIMOLINK per software in MASTERDRIVES MC [150...160].

Applications of SIMOLINK:

- Replacement of mechanically coupled moving axes with individual drives
- Transmission of angle setpoints between master and slave axes for angular synchronization and cam function
- Replacement of conventional RS485 peer-to-peer connection for data exchange between SIMOVERT power converters

Special SIMOLINK properties in a master/slave configuration

Master interfaces are available for:

- SIMADYN D
- SIMATIC FM458
- SICOMP SMP

♦ The master can write data into a maximum of 1000 doubleword messages. The slaves can read doubleword information from a maximum of any 8 message locations.

♦ Cross-traffic, i.e. message exchange between slaves, is possible. The traffic is always routed via the master, however.

Special SIMOLINK properties in a peer-to-peer configuration with no host system

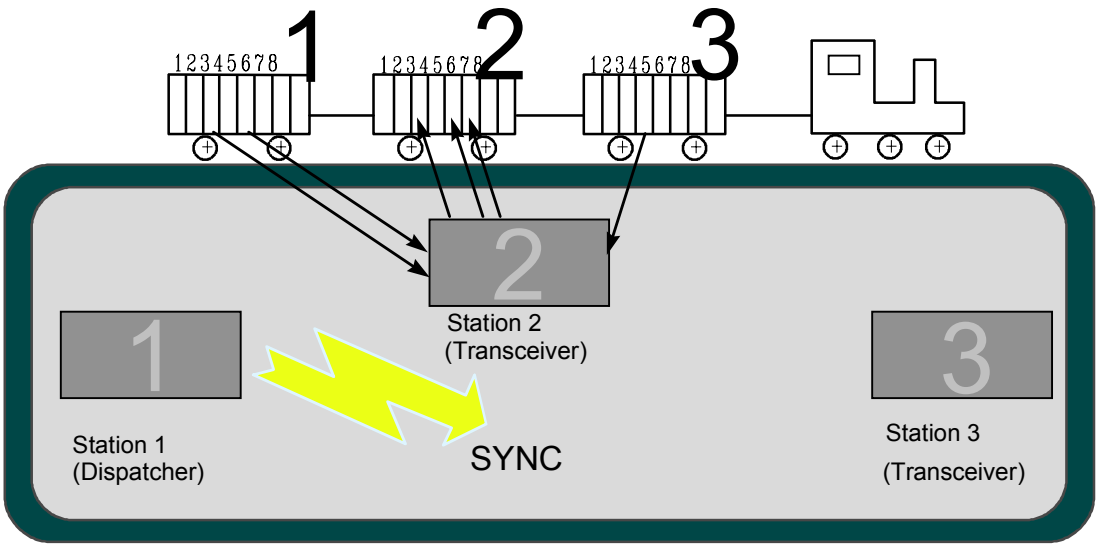

Fig. 9-43

The SIMOLINK drive interface can be compared to a goods train that passes through various stations on a circular route. The stations in this example are represented by 3 MASTERDRIVES converters:

♦ A "data train" sent by a dispatcher travels along the SIMOLINK ring. Otherwise, the dispatcher has the same function as the two transceivers.

♦ A goods carriage with capacity for 8 double word messages (called "channels") is permanently assigned to each station. The station can only store send packets in this carriage.

♦ Each station can read up to 8 data packets from any goods carriage, however.

♦ After one lap of the circuit, the dispatcher sends a SYNC message "to all". All stations now start their sampling time at exactly the same instant with related setpoints.

♦ The drives coordinate themselves without the need for a centralized host system.

9.6 Configuration

9.6.1 Encoders for the Position Sensing System

The sensor boards for the various encoders that can be connected to MASTERDRIVES MC are described in the first section of "Brief Description of the Technology Functions". The table is intended as a configuring aid, and shows an overview of the properties of the various encoders:

Encoder Type	**Sensor Board in MASTERDRIVES MC**	**Resolution** [Increments/ Revolution]	**Achievable Positioning Accuracy** 1) [Increments/ Revolution	**Can be Used as**	
				Motor Encoder	**External Encoder**
Resolver 2)	SBR1/SBR2 (without/with pulse encoder simulation)	4096 inc./rev. with 2-pole resolver	1024 inc./rev. with 2-pole resolver	Yes	No
Sin/cos encoder ERN 1387 5)	SBM2	16,8 x 10^6 Inc/rev.	10^5 ... 10^6 Inc./rev.	Yes	Yes
Absolute encoder EQN 1325	SBM2	16.8 x 10^6 inc./rev. 4096 rev. reproducible	10^5 ... 10^6 Inc./rev.	Yes	Yes
Pulse encoder 3)	SBP	No. of lines x 4, i.e. 4096 inc./rev. with standard motor encoder	Number of lines x 1, i.e. 1024 inc./rev. with standard motor encoder	Yes (with asynchr-onous motor)	Yes
SSI absolute encoder 4)	SBM2	4096 inc./rev. typical 4096 revolutions typically reproducible	1024 inc./rev. typical	No	Yes
Absolute encoder EQI1325	SBM2	4096 Inc/rev.	1024 Inc/rev.	Yes	No

Notes:

1) In practice, the resolution of the encoder must be between 1 and 10 times higher than the required positioning accuracy. The accuracies specified in the table are only approximate guidelines.

2) Notes on resolver:
   - Correspondingly higher resolution and accuracy with multi-pole resolvers
   - In the following cases, you should use an ERN1387 sin/cos encoder instead of a resolver:
     - If extremely high positioning accuracy is required
     - If an extremely high control response is required
     - If printing indices are to be detected exactly
     - If a good rotary response is required at extremely low speeds below approx. 5 rpm.
   - With the SBR2, the pulse encoder simulation is connected to terminals with 2 tracks each with 512 or 1024 pulses per revolution (adjustable) and zero pulse, RS422 level (TTL differential signal). Valid for 2-pole resolvers; correspondingly larger number of pulses per revolution with multi-pole resolvers.

3) Notes on pulse encoder:
   - Pulse quadrupling takes place internally on the SBP (edge evaluation)
   - Number of lines configurable between 4 and 32768 lines per revolution
   - Max. pulse frequency that can be evaluated: 410 kHz
   - HTL and RS422 level that can be evaluated
4) Notes on SSI encoders:
   - Large number of SSI encoder designs on the market with various resolutions (singleturn and multiturn, linear scales, etc.)
   - All encoders with standard SSI protocols can be evaluated (e.g. SIEMENS, Stegmann, TR, Fraba, Heidenhain, infrared distance measuring systems, etc.)
5) Notes on SBM2: pulse encoder simulation connected to terminals with 2 tracks each with 2048 pulses per revolution and zero pulse; RS422 level.

9.6.2 Requirements of Position Encoders for Rotary Axes

Condition for rotary axis positioning with **absolute encoder** (i.e. without homing):

1 rotary table revolution must correspond to 2^n encoder revolutions (n = 0, 1, 2, 3, 4, ...).

Example:

For an SSI encoder, which can detect 4096 revolutions with 4096 steps each, => 1 rotary table revolution must correspond exactly to 1, 2, 4, 8, 16, 32 etc. revolutions of the encoder.
Remedy: see Section 9.4.9

Condition for rotary axis positioning with **incremental encoder** (resolver, ERN encoder, pulse encoder):

When determining the actual value weighting factor (AVWF, number of LUs per encoder increment; e.g. P169, P170 when using the motor encoder), the result must be a number with a maximum of 8 decimal places; the 9th and all subsequent decimal places **must** be "0".

Examples:

- 1 encoder increment corresponds exactly to 23.123456780000 LU => O.K.
- 1 encoder increment corresponds to 23.123456789123...LU => not O.K.

Remedy: specify AVWF with numerator and denominator (P180 or P181)

9.6.3 Brake Controller

The automatic brake controller [470], which is already integrated in the standard MASTERDRIVES software, can be activated with P605 = 1 or P605 = 2 for brakes with checkback contact(s) [470.7].

The integrated brake controller [470] prevents inconvenient pauses on application and release of the brake. Even lifting systems are positioned rapidly and reliably - with minimum effort required on the external machine controller and during commissioning.

The output signals of the brake controller are the binectors "open brake" B275 and "close brake" B276 [470.8]. Relays for actuation of the brake are not installed in the MASTERDRIVES unit. The following options are available for brake actuation:

- Use of a relay output on terminal expansion board EB2
- Use of an external relay actuated by a digital output of the MASTERDRIVES
- The relay installed on compact and rack-mount units for main contactor actuation can be used for the brake controller if no main contactor is provided (P601 = 275).

The opening and closing of the brake can also be initiated by external commands (using the connectors selected with P608, P609 and P614 [470.1]), however the brake controller normally operates fully automatically without intervention from the external machine controller. The BICO wiring required for this purpose is shown in the comment boxes in [470]. The fully automatic brake controller normally operates as follows:

Open brake

When the drive switches to "operation" mode after power on, the inverter enable is activated and the brake is opened. After the brake opening time set in P606 (factory setting 200 ms [470.5]), if the "brake open" checkback signal is active, the setpoint enable is activated.

The limit monitor, set in P611 [470.3], can be used in special situations, in order to open the brake depending on a specific condition (e.g. if a certain torque level is exceeded; in this case "brake open" is activated by binector B281 and binector B277 "setpoint enable" must not be wired directly).

Close brake

When the drive is brought to a standstill, i.e. when its speed has dropped below the threshold set in P616 [470.3] and it is switched off with OFF1, OFF2 or OFF3, the brake closes. The inverter enable is canceled when the brake closing time set in P607 has expired (factory setting 100 ms [470.5]) and the "brake closed" signal is activated (by a checkback contact if one is installed). You should avoid using OFF2 where possible, since the pulses are disabled immediately on an OFF2 command, and the motor is already without power during the brake closing time.

9.7 Application Examples

9.7.1 Positioning of a Linear Axis via PROFIBUS

Application examples can be requested from the regional office of SIEMENS AG or from the application center for production machines.

9.7.2 Positioning and Synchronization with Virtual Master Axis (Suitable for Self-Study)

9.7.2.1 Task Description

This example is intended to

- Help the user configure and commission the drive
- Provide a rapid means of familiarization with the positioning and synchronization functions with reference to a trial configuration.

You can run this example application using the 2-axis demonstration pack available from Siemens (Order No. 6SX7000-0AF10; see /1/).

You need the following components in order to use the example configuration:

Component	**Quantity Required for Positioning**	**Quantity Required for Synchronization**
1FT6 or 1FK6 motor with resolver or encoder *)	1	2
MASTERDRIVES MC with option F01 and the matching sensor board	1	2
Switch box with 6 switches	1	2
Potentiometer, approx. 10 K **)	---	1
OR		
1-axis demo. pack /5/	1	2
OR		
2-axis demo. pack /6/	1	1

*) An asynchronous motor can also be used, however some parameter settings require slight modification.

**) You can connect the +10 V terminal on the potentiometer to the analog output on terminal X101.11. You must then set P640 = 1 [80.1], so that +10 V is output at the analog output (corresponds to 100 %).

The application example contains the following configuration:

- 2 Siemens synchronous servo motors: 1FK6 with resolver and 1FT6 with optical sine/cosine encoder (only one motor required for positioning)
- 2 MASTERDRIVES MC converters with technology option F01 (only one converter required for positioning)
- Both drives should be operated in the following modes:
  - Homing (this is required for positioning, since resolvers and optical encoders are incremental and not absolute encoders)
  - Point-to-point positioning (MDI; axis type "rotary axis", i.e. without fixed stops)
  - Synchronization with 1:1 transmission ratio using the virtual master axis and the SIMOLINK drive interface
- When the two-axis pack is used, the synchronization can be checked with reference to an LED light beam, which is visible through drilled holes in the flywheel mounted on the motor shafts when the synchronization is operating correctly.

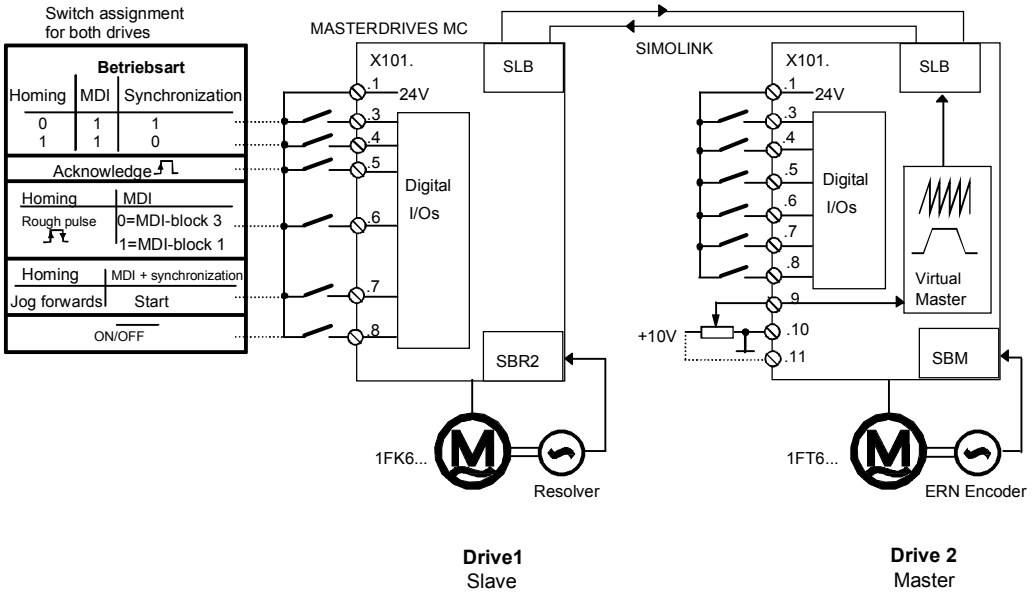

Fig. 9-44 Application Example 2: Hardware Configuration and Wiring

The application example guides you through the relevant pages of the function diagram and the parameter settings. It is assumed that the basic units have been started up in speed control mode, as described in Chapter 6. If you only want to use the positioning functions, you need only one drive instead of two for the self-study and you can skip the sections starting from 9.7.10.

9.7.2.2 Overview Diagram

The overview diagram in Fig. 9-45 shows how the technology functions are interconnected.

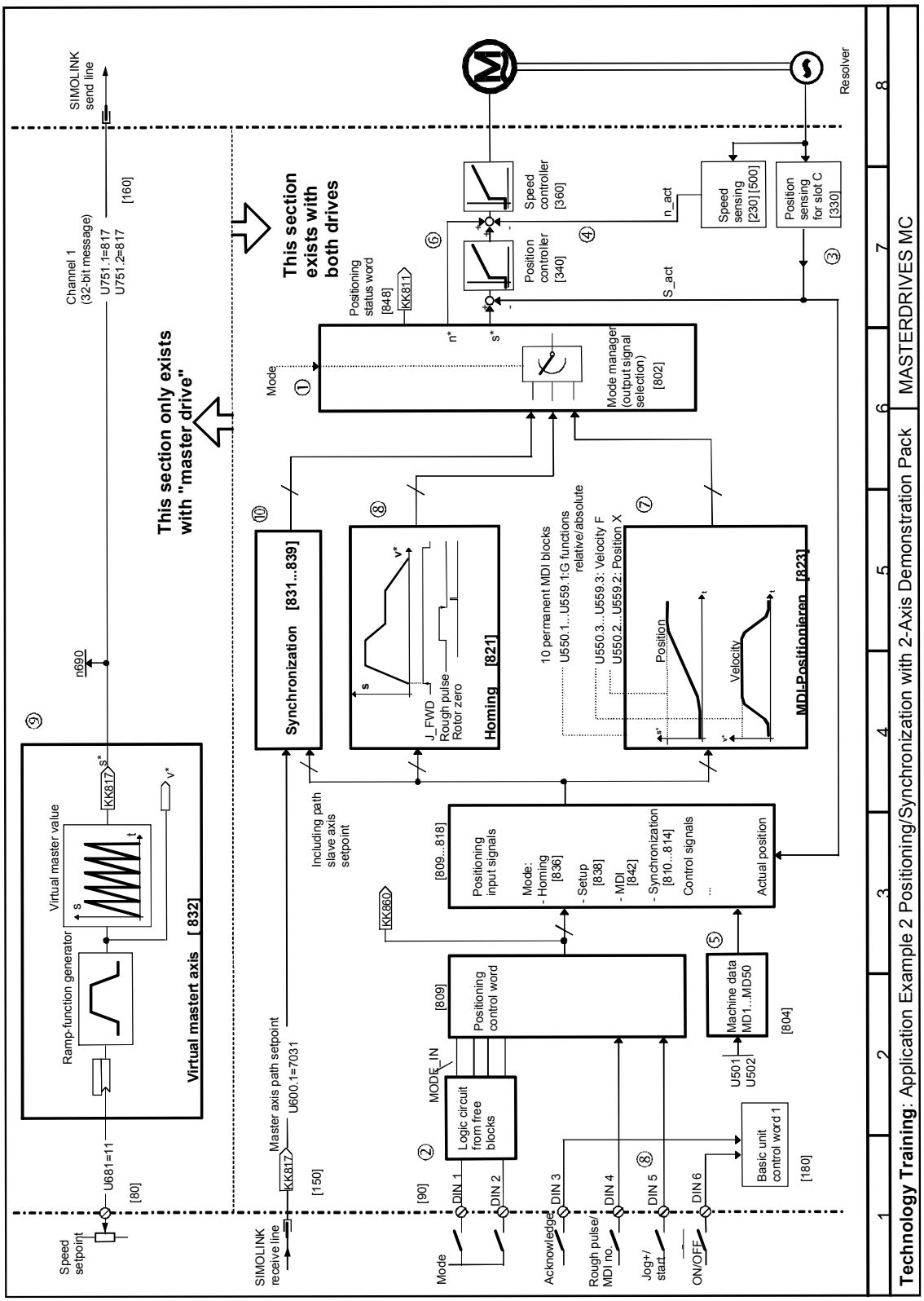

Fig. 9-45 Application Example 2: Positioning/Synchronization with 2-Axis Demonstration Pack

The numbers in circles indicate the corresponding areas on the overview diagram.

The "mode", "acknowledge" and "MDI no." switches, which are connected to the 4 digital inputs (②, function diagram, sheet [90]), are routed to positioning control word [809]; the mode is generated from free blocks via a small logic circuit (described below). The "acknowledge" and "ON/OFF1" switches act directly on basic unit control word 1 [180].

The mode selector ① activates the synchronization ⑩, homing ① and MDI (point-to-point positioning ⑦) modes. The mode manager ① ensures that the output signals of the active mode are switched through to the setpoint command on the position and speed controller ⑥.

The virtual master axis ⑨ contains the velocity ramp-function generator for both drives and the "saw-tooth pulse generator" for the position setpoint generation (master value, period corresponds to 10 motor revolutions). The virtual master axis is only calculated on drive 2. It is not activated on drive 1. This, and the velocity setpoint potentiometer, which is only connected to drive 2, are the only differences in the parameter settings for both drives. We will initially limit our description to drive 2. The further procedure is as follows:

- Commission the positioning functions on drive 2 (Sections 9.7.2.3...8).
- Test the positioning functions on drive 2 (Section 9.7.2.8). Users whose application only involves positioning can skip the following steps.
- Commission the virtual master axis on drive 2.
- Test the virtual master axis on drive 2.
- Commission the synchronization on drive 2.
- Commission the positioning and synchronization functions on drive 1.
- Test the positioning and synchronization functions on drives 1 and 2.

The parameters marked with (WE) do not have to be entered, since the factory settings are suitable.

9.7.2.3 Connection of Digital Inputs

Fig. 9-45 shows the digital input assignments used in this example ②.

The assignment of functions to individual terminals used here is arbitrary. The BICO technology (connector/binector technology) allows virtually any terminal wiring to be implemented.

Terminal 8 is connected by means of the following parameter setting to the OFF1 command in basic unit control word 1, which also actuates the inverter enable in this example (the square brackets indicate the relevant pages in the function diagram):

```
P554.1=20     ; FF1 command from terminal X101.8 [90] ==> [180]
```

Terminal 5 is assigned to the "acknowledge fault" function (basic unit control word 1)

```
P565.1=14     ; Acknowledge fault from terminal X101.5 [90] ==> [180]
```

Terminal 7 has a dual assignment:

- In homing mode you use it to define the "jog forwards" signal [J_FWD], which starts the homing procedure:

```
U710.28=18    ; Jog forwards[J_FWD] from term. X101.7 [90] ==> [809]
```

- In MDI and synchronization modes you use it to specify the start command [STA] used to start a movement (see manual /1/ "Motion Control for MASTERDRIVES MC and SIMATIC M7", "Control and Checkback Signals" chapter).

```
U710.3=18     ; Start command [STA] from terminal X101.7 [90] ==> [809]
```

Terminal 6 has a dual assignment:

- In homing mode, the rough pulse is expected from the home position cam or proximity switch (BERO) acting on the position sensing system (see also MD45 in the "Machine Data Input" section):

```
P178=16       ; Reference BERO from terminal X101.6     [90] ==> [330]
```

- In MDI mode, terminal 6 is used to switch between MDI block 1 (low signal) and 3 (high signal). This selection is made via bit 9 of the positioning control word [809], which is connected to the MDI mode [823] and switches there between the permanent NC blocks configured in U550 and U552.
  Bit 8 of the positioning control word is initialized permanently to "1":

```
U710.10=16  ; MDI block selection [MDI_NO] from terminal X101.6
U710.09=1   ;                                          [90] ==> [809]
```

Terminals 3 and 4 select the mode according to the following truth table:

Signal at Terminal 3	Signal at Terminal 4	Mode	Bitmap at [MODE_IN] [809.4] 2^3	2^2	2^1	2^0
0	0	-	-			
1	0	11 = Synchronization	1	0	1	1
0	1	2 = Homing	0	0	1	0
1	1	3 = MDI	0	0	1	1

The small logic circuit below generates the required mode selection bits 28...31 [MODE_IN] for the positioning control word [809] from the signals at terminals 3 and 4:

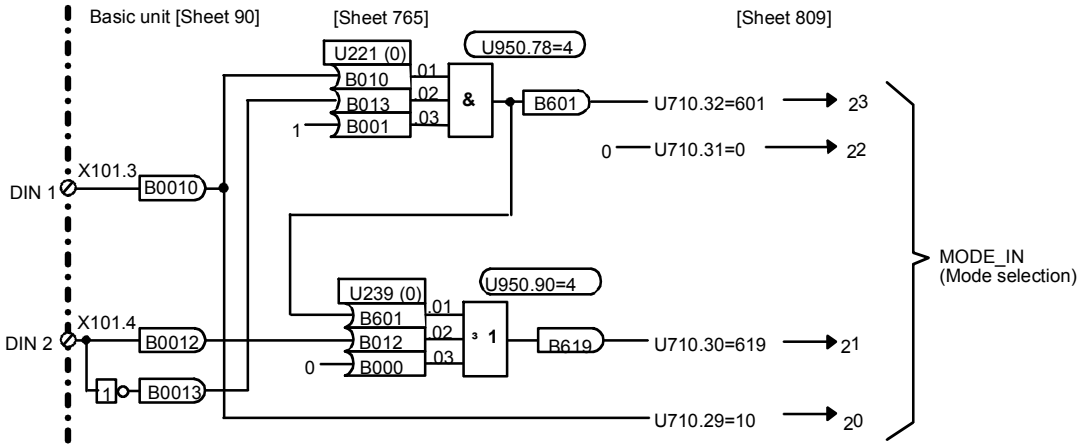

Fig. 9-46 Application Example 2: Circuit for Generating the Modes

This circuit is established by the following parameters using a free AND and OR element on sheet [765] of the function diagram:

```
U950.78=4    ; Nest AND element in sampling time 24  x T0    [765]
U950.90=4    ; Nest OR element in sampling time 24  x T0     [765]
U221.1=10
U221.2=13
U221.3=1     ; (WE) factory setting; can be retained
U239.1=601
U239.2=12
U239.3=0     ; (WE) factory setting; can be retained
U710.32=601
U710.31=0    ; (WE) factory setting; can be retained
U710.30=619
U710.29=10
```

You can check that the mode input is generated correctly at the [MODE_IN] switches with display parameter n540.14 [809.8] after you have nested the binector/double-connector converter for generation of the positioning control word [809] in a sampling time as follows (see also [702]):

```
U953.30=4    ; Nest pos. control word generation in sampling time T4
             (=2^4*T0=16*200µs=3,2 ms with 5 kHz converter freq.)
```

If you use the 2-axis demonstration pack, please note that all 4 jumpers must be plugged in crosswise so that all 4 bidirectional digital I/Os are configured as inputs.

9.7.2.4 Connection and Parameters of the Position Sensing System

Connection of the position sensing system

The technology [815] is connected to the position sensing system ③ for the motor encoder in slot C [330] using the following circuit. Most of the parameters can remain in the factory setting (WE):

```
Signals from position sensing [330] ==> technology [815]:
U535=120          ; Actual position
U529= 70     (WE) ; "Actual position O.K." binector from resolver
                  ; sensor board in slot C [230]
U539=122          ; Measured position from measured value memory
U538=212     (WE) ; "Measured position valid" binector
U537.02=210  (WE) ; "Home position detected" binector

Signals from technology [815] ==> position sensing [330]:
P172=302          ; Position set value
P173=302     (WE) ; "Set position" binector
P174=301          ; Position correction value
P175.01=303  (WE) ; "Correct position +" binector
P175.02=304  (WE) ; "Correct position -" binector
P184=303          ; Position offset
P179=308     (WE) ; "Enable measured value memory" binector
P177=307     (WE) ; Enable homing
```

Defining the length unit (LU) and setting the actual value weighting factor (AVWF)

- Defining the length unit (LU):
  In this application example, the actual position measurement is to be weighted such that the user can specify his position setpoints in the length unit [1 Length Unit = 1 LU = 0.1°], i.e. in tenths of one degree. For example, a setpoint of 3600 is to correspond to a distance of 360.0°, i.e. one revolution of the motor. It is assumed that no gearbox is used.
- Determining the actual value weighting factor (AVWF):
  With the factory setting P171 = 12, the "shift division block" [330.4] outputs an actual position signal with 4096 increments per motor revolution. The actual value weighting factor (AVWF) specifies the number of length units (LU) per increment. Hence,
  AVWF = 3600/4096 [LU/increment] = 0.87890625.

The actual value weighting factor is entered as follows in parameters P169 and P170 [330]:

```
P169=0            ; Decimal places of actual value weighting factor
P170=87890625     ; Decimal places of actual value weighting factor
```

Configuration of the position sensing and homing systems

The following parameters enable position sensing and homing [330.2] for the motor encoder in slot C and select the homing direction in the direction of increasing positional values (the same direction must be entered in machine data MD5; see step ④):

```
P1830011        ; Enable sensing and homing,
                ; positive approach direction for home position
                ; to right of BERO
```

9.7.2.5 Velocity Normalization P353 [20.5] and P205 [340.2]

Parameters P353 and P205 are used to define the maximum traversing velocity ④, which must never be exceeded during operation (mechanical limit velocity).

In our application example, we want to set a limit of 1 000 000°/min, i.e. 10 000 000 LU/min (1 length unit = 1 LU = 0.1°; see above). P205 must therefore be set to the following value:

```
P205=10 000     ; Rated velocity 10 000 000 LU/min,
                ; Input in [1000 LU/min]                [340.2]
```

This parameter mainly affects only the normalization of the loop gain for the position controller. The value of P205 must also be entered in machine data MD23 (see below).

Since no gearbox is installed, the reference speed of the motor P353 (in min^{-1}) can be calculated directly, i.e. the motor speed at which the rated velocity P205 is reached:

P205 = 10 000 000 LU/min = 1 000 000°/min = (1 000 000/360) min^{-1} = 2777.777 min^{-1}

```
P60=5           ; Change to "drive setting" parameter menu
P353=2778       ; Reference speed in motor revs/min [20.5]
P60=0           ; Exit drive setting
```

The speed setpoint definition KK0150 for the speed controller [360.4] refers to this reference speed: if KK0150 is equal to 100 %, the reference speed of 2778 min^{-1} defined in P353 is the motor speed. The following motor speed setpoints output by the technology refer to this reference speed:

- The speed precontrol value KK312 [817.7 and 836.8] for the position control modes
- The speed setpoint K311 [817.7] for the speed control modes, e.g. homing

The velocity override is normally set to U708 = 100 %. You can use this parameter to reduce the velocity of all movements, e.g. in the initial commissioning phase.

```
U708=78    (WE) ; Fixed velocity override 100 % [809.1]
```

```
P770            ; Setting as described in Section 9.4.10
P771
```

9.7.2.6 Machine Data Input U501 and U502 [804]

Machine data MD1 to MD50 (parameters U501.01 to U501.50) are used to define centralized settings required by the working machine and the mechanical transmission elements for positioning and synchronization ⑤. In our application example, the following settings are required:

Position encoder and axis type

```
U501.01=1        ; MD1: encoder type "incremental encoder"
                   (resolver)
U501.11=36000    ; MD11: axis type "rotary axis with axis length
                 ; 36000 LU (equals 10 motor revolutions,
                 ; see actual value weighting factor (AVWF)
```

Defining the traversing velocity and the acceleration/ deceleration ramps:

The same value as P205 should be entered as the maximum traversing velocity MD23 (see above). All output motor speed setpoints and the acceleration/deceleration times of the velocity ramps in the homing [821] and control [825.3] modes refer to MD23.

```
U501.23=10 000   ; MD23: Max. traversing velocity is
                 ; 10 000 000 LU/min. Input in [1000 LU/min].
                 ; Enter same value as P205; see above!
```

For the acceleration MD18 and deceleration MD19 for the position control modes we will assume that the customer requires an acceleration time of 0.5 s from 0 to MD23. The acceleration is then as follows:

Acceleration = MD23/acceleration time = (10 000 000 LU/min) / 0.5 s = 333 333.333 LU/s^2

We will also assume that the deceleration MD19 is to take place with the same ramp gradient as the acceleration:

```
U501.18=333      ; MD18: acceleration for the position control
                 ; modes [*1000 LU/s²]
U501.19=333      ; MD19: deceleration for the position control
                 ; modes [*1000 LU/s²]
```

For the acceleration time MD41 for the speed control modes homing [821] and control [825.5], we will assume that the customer requires 0.7 s for an acceleration from 0 to the velocity defined in MD23. 0.7 s are also used as the deceleration time in MD42 (refers to a deceleration from the velocity in MD23 to 0). The following machine data must be entered:

```
U501.41=700      ; MD41: acceleration for the speed control
                 ; modes [ms]
U501.42=700      ; MD42: deceleration for the speed control
                 ; modes [ms]
```

Defining the machine data for homing [821]:

The home position is to be approached at 1/5 of the maximum velocity (MD23/5). When the axis moves away from the proximity switch area (falling edge of rough pulse), the velocity is to be reduced to 1/40 of the maximum velocity. Machine data MD7 and MD6 should be set as follows:

```
U501.07=2000     ; MD7: Home position approach velocity = 1/5
                 ; of maximum velocity = MD23/5 =
                 ; 2000 [x 1000 LU/min], equals 556 min-1 on the
                 ; motor shaft
U501.06=250      ; MD6: Home position reducing velocity = 1/40
                 ; of maximum velocity = MD23/40 =
                 ; 250 [x 1000 LU/min], equals 69 min-1 on the
                 ; motor shaft
```

Note <3> on [821.1] must be observed for the alignment of the home position rough pulse for a unique assignment of the resolver zero crossing to the rough pulse. In our application example, we will assume that the home position is located to the right of the current position, i.e. in the direction of increasing positional values, at the start of the homing procedure. We will also assume that the machine zero, to which all position setpoints refer, is located at an offset distance of +3440 LU (equals 344°), as defined in MD4, from the zero crossing. This results in the following machine data:

```
U501.03=0    (WE); MD3: Home position coordinate = 0, i.e. MD3 can
                 ; remain at the factory setting.
U501.04=3440     ; MD4: Home position offset = 3440 LU
U501.05=1    (WE); MD5: Home position approach direction "to right
                 ; of BERO" (N.B.: this value must also
                 ; be entered in P183 [330]; see Chapter 4
```

The rough pulse proximity switch is connected to digital input terminal X101.6. This signal is already connected to the position sensing system via P178 (see Chapter 3). Machine data MD45 must also be used to connect the rough pulse to the technology [90] ==> [813.4] ==> [821.2]:

```
U536.4=16    (WE) ; Connect BERO signal from digital input
                  ; terminal 6 to "digital input I4 for positioning"
U501.45=7000      ; MD45: I4 acts as
                  ; "BERO for home position"
```

Transferring machine data [804]:

The transfer and activation of the machine data is performed by switching the drive on/off or by setting the following parameters (only possible when the drive is stationary).

```
U502=2           ; Transfer and activate machine data. If
                 ; machine data transferred without error, U502
                 ; is automatically reset to "0".        [804.2]
```

9.7.2.7 Connecting the Technology to the Speed and Position Controllers

The position setpoint KK310 output by the technology acts as a setpoint for the position controller ⑥:

```
P190.1=310 (WE)   ; Wire position setpoint [817.7] ==> [340.1]
```

The actual position from the motor encoder in slot C is wired to the position controller as an actual value:

```
P194.1=120 (WE)   ; Wire actual position [330.8] ==> [340.1]
```

The enabling of the position controller [340.3] and the speed setpoint for control and homing modes [340.7] is performed exclusively via binector B305, which is output by the technology [817.7]. The two "enable position controller" commands [340.3] must be permanently set to "1" for this purpose:

```
P210.1=1          ; Set enable 1 for position controller
                  ; permanently to "1" [340.1]
P211.1=1          ; Set enable 2 for position controller
                  ; permanently to "1" [340.1]
P213.1=305 (WE)   ; Enable speed setpoint for control mode
                  ; [817.7] ==> [340.7] (0/1 = position control/speed
                  ; control mode)
```

The speed setpoint output by the technology for the speed control modes "control" and "homing" [817.7] is connected to the speed setpoint input [340.7] downcircuit of the position controller:

```
P212.1=311 (WE)   ; Wire speed setpoint for control/homing
                  ; mode [330.8] ==> [340.1]
```

Output signal KK131 of the position controller is connected to the speed controller input:

```
P220.1=131        ; Wire position controller output to speed
                  ; controller [340.8] ==> [360.1]
```

9.7.2.8 Setting the Parameters for the Positioning Modes

Nesting the positioning modes in the sampling time:

U953.32 is used to nest the positioning modes [802.8] in a sampling time. In the factory setting of this parameter (20), the positioning software does not run (see [702]).

```
U953.32=4       ; Nest positioning modes in sampling time T4
                (=2^4*T0=16*200µs=3.2 ms with converter frequency 5 kHz)
```

MDI block numbers 1 and 3 [823], which are selected by the switches on terminals 3 and 4 (Chapter 3), should be set as follows in our application example:

MDI block 1:

- First G function = 90 (absolute, not relative positioning)
- Second G function = 30 (100 % of the acceleration/deceleration set in MD18/MD19)
- Position setpoint (X) = 0 LU
- Velocity (F) = 5 000 000 LU/min (equals 500 000°/min = half the maximum velocity in MD23/2; equals 1389 motor revolutions/min)

NOTE

The velocity in the MDI block is defined in [10 LU/min] instead of [1000 LU/min] as in the machine data

```
U550.01=9030 (WE) ; Absolute positioning, 100 % acceler-
                  ; ation override                          [823.4]
U550.02=0    (WE) ; Position setpoint X=0                   [823.5]
U550.03=500 000   ; Velocity F=5 000 000 LU/min, input in
                  ; [10 LU/min]                             [823.6]
```

MDI block 3:

- First G function = 90 (absolute not relative positioning)
- Second G function = 30 (100 % of the acceleration/deceleration set in MD18/MD19)
- Position setpoint (X) = 16 200 LU (1620° in clockwise direction of rotation, equals 4.5 revolutions)
- Velocity (F) = 1 000 000 LU/min (equals 100 000°/min = 1/10 maximum velocity MD23; equals 277 motor revolutions/min)

```
U552.01=9030 (WE) ; Absolute positioning, 100 % acceler-
                  ; ation override  [823.4]
U552.02=16 200    ; Position setpoint X=16200 LU            [823.5]
U552.03=100 000   ; Velocity F=1 000 000 LU/min, input in
                  ; [10 LU/min]     [823.6]
```

9.7.2.9 Testing the Positioning Functions of the Application Example

Performing the homing procedure

a) Note: The sequence of the homing procedure is described in function diagram sheet [821] and the Function Description in the "Motion Control for MASTERDRIVES MC and SIMATIC M7" manual /1/.

b) Select "homing" mode at the switches on terminals 3 and 4 (see Figure 9-42).

c) Acknowledge any active positioning warnings "Axxx" at the switch on terminal 5. The most important warnings are generated by the following error monitoring and "in-position monitoring" systems [818.5]. If necessary, select a more tolerant setting for the monitoring system temporarily by increasing MD14...MD17.

d) Switch on the drive at terminal 8.

e) Start homing with "jog forwards" (1 signal at terminal 7)

f) Simulate a rough pulse at DIN 4 (0-1 edge reduces the velocity, 1-0 edge terminates referencing)

g) Optimize the position controller loop gain. For example, the optimum setting for a two-axis demonstration pack is as follows:

```
P204.1=8,000   ; Loop gain factor for position controller [340.3]
```

Positioning with MDI on drive 2 (function diagram, sheet [823])

a) Select MDI mode at the switches on terminals 3 and 4

b) Select MDI block 3 at terminal 6

c) Start the positioning movement using the START command at terminal 7

d) The wheel now moves 4.5 revolutions to the right.

e) Switch from MDI block 3 to MDI block 1 at terminal 6. The MDI block is permanently assigned with position setpoint X = 0 and five times the velocity F.

f) Start another positioning operation. The drive now moves back to position 0 at 5 times the velocity (in the clockwise direction, because jog forwards = 1), i.e. through 5.5 revolutions.

9.7.2.10 Setting the Parameters for the Virtual Master Axis

Nesting the virtual master axis in the sampling time

The virtual master axis ⑨ [832] is a separate free block (which can be used independent of positioning and synchronization). It is activated with the following parameter setting and is nested in the same sampling time as the positioning system:

```
U953.34=4        ; Nest virtual master axis in sampling time T4
                 (=2⁴*T0=16*200µs=3.2 ms for converter frequency 5 kHz)
```

Input signal and enable signal of virtual master axis

The virtual master axis is enabled in this application example together with the start command for positioning (terminal 7; see Fig. 9-44). The input velocity setpoint is transmitted from the potentiometer at the analog input (terminal 9/10):

```
U689=18          ; Enable for virtual master axis [832.2] together with
                 ; start command from terminal 7 [90]
U681=11          ; Velocity setpoint for virtual master axis
                 ; [832.1] from potentiometer at analog input [80]
```

Rated velocity and acceleration ramp for virtual master axis:

The rated master velocity (maximum machine velocity) in this example is set to the same value as the maximum traversing velocity MD23 for positioning:

```
U682=1 000 000   ; Rated velocity for virtual master = MD23
                 ; =10 000 000 LU/min (input in [10 LU/min]), this
                 ; equals  2778 min-1 on the motor shaft (see
                 ; P353)                                    [832.2]
```

We will assume an acceleration time for the virtual master of 1 s for acceleration from 0 to the rated velocity of 10 000 000 LU/min configured in U682. This corresponds to the following acceleration:

```
U685=167         ; Acceleration for velocity ramp-function generator
                 ; in virtual master axis [832.5] =
                 ; (10 000 000 LU/min) / 1s = 166 667 LU/s2
                 ; (input in [1000 LU/s2]
```

Setting the axis cycle length of the virtual master axis

The axis cycle length for the virtual master ACL_V in this application example is the same as the rotary slave axis length of 36000 LU defined in MD11 for the positioning functions; this equals 10 motor revolutions with 3600 LU each (1 LU = 0.1°):

```
U687=36 000      ; Axis cycle length for the virtual master [832.6]
                 ; = 36000 LU equal to 10 motor revolutions each
                 ; with 360.0°  (1LU = 0.1°; see AVWF)
```

9.7.2.11 Testing the Virtual Master Axis

a) Start command = 1 (switch on terminal 7) on drive 2
b) Set potentiometer to 10 V (corresponds to 100 %)
c) Check the velocity setpoint of the virtual master axis at KK820 [832.8] (e.g. at r33.1 [30.2] if P32.1 = 820 is set)
d) Start = 0
e) Set potentiometer to 0 V
f) Start = 1 ==> observe the reduction in velocity setpoint from 100 % to 0 % at r33.1: it takes 1 s (this is easier to visualize if the acceleration time is increased temporarily from 1 s to 10 s with U685 = 17).

9.7.2.12 Configuring the Synchronization Function

Nesting the synchronization function

The synchronization function ⑩ is nested as a "positioning mode" in our application example (see the section entitled "Synchronization Mode - Overview" in "Brief Description of the Technology Functions" and [802.8]), i.e. U953.33 can retain the factory setting of 20.

Wiring the master value for synchronization

The input path setpoint [834.1] is transferred from SIMOLINK receive double word 1 KK7031 [150.6] with the factory setting (U600.01 = 7031 and U606 = 0). The master value is therefore already correctly connected to the output of the virtual master axis - via the SIMOLINK (see steps 10 and 13 in application example 2).

Setting the master axis cycle length

The master axis cycle length [834.2] must be set to the same value as the axis cycle length of the virtual master (U687; see [832.6] and step 10 in application example 2):

```
U601=36 000 ; Master axis cycle length [834.2] = Axis cycle
; length of the virtual master [832.6]
; = 36000 LU = 10 motor revolutions each
; with 360.0°  (1LU = 0.1°; see actual value weighting factor AVWF)
```

Setting the synchronization mode

Angular synchronization 1:1 is to be used in our example (no engaging/disengaging cycle, no gearbox, no cam). This mode is already initialized with the factory settings:
[Operation] = 0 [834.5] and [FUNCTION] = 0 [836.4].

Setting the slave axis cycle length

The slave axis cycle length [836.4 and 836.6] has already been set correctly to 36000 LU during configuration of the positioning system with machine data MD11 (step 6 in application example 2).

Setting the parameters for position correction

The control inputs of the position correction system [836.4] are already wired appropriately with the factory settings (for the use of a motor encoder). The normalization of the output velocity setpoint MD23 [836.7] was also already set to the correct value when the machine data were configured (step 6 in application example 2).

9.7.2.13 Configuring the SIMOLINK Master

We are currently concerned with drive 2 of the application example, which calculates the virtual master axis ⑨ and handles the SIMOLINK dispatcher function.

The SIMOLINK drive interface is described in detail in the "Communication" chapter of the Compendium and in [140...160]; the hardware commissioning is detailed in the instruction manual of the SLB board. The SIMOLINK master is configured from the "board configuration" parameter menu (see the "Parameterizing Steps" of the Compendium). In our example, drive 2 is only required to send two double words, i.e. the path setpoint of the virtual master axis and a reserve word (unused). Both drives receive the path setpoint of the virtual master axis from SIMOLINK (including the master itself - this safely eliminates a deadtime difference between the path setpoints for drives 1 and 2).

```
;     Configuration of the SIMOLINK master (dispatcher)
P60=4        ; Select the parameter menu "board configuration"
P740=0       ; The dispatcher always has SIMOLINK address "0"
P741=100ms   ; Message timeout
P742=1       ; "Low output power" adequate with
             ; short cable
P743=2       ; No. of stations = 2 drives
P745=2       ; 2 channels (i.e. 2 send messages, 32 bits each)
             ; per station; all stations must have same setting
             ; based on the station that sends most messages
             ; in this case the master: 1 word for path setpoint
             ; of virtual master axis, 1 word reserved
             ;
P746=3,20    ; Set cycle time 3.2 ms for SIMOLINK ==>
             ; every 3.2 ms the master automatically sends a SYNC
             ; message, which synchronizes the sampling times of
             ; all stations. P746 should be set to the same
             ; sampling time in which the synchronization is
             ; nested (U953.32=4)
P749.01=0,0 ; 1st SIMOLINK receive double word KK7031 [150.7] =
             ; channel 0 of station 0 (i.e. of master)
P749.02=0,1 ; 2nd SIMOLINK receive double word KK7033 =
             ; channel 1 of master                          [150.7]
P60=0        ; Exit board configuration
P751.1=817   ; Connect output path setpoint KK817
P751.2=817   ; of virtual master axis [832.8] to send channel 0
             ; of SIMOLINK (assign the same double-connector to
             ; send words 1 and 2)                           [160.1]
```

9.7.2.14 Setting the Parameters for Drive 1 (SIMOLINK Slave)

In Sections 9.7.2.3 to 13, we commissioned drive 2 completely, step-by-step with its positioning functions and the virtual master axis. We can now focus on drive 1 and commission it for position control mode before we tackle the testing of the SIMOLINK and the synchronization functions.

The procedure for setting the parameters and commissioning the positioning functions for drive 1 is identical to the description in steps 3 to 12 for drive 2. You can omit steps 10 and 11, since the virtual master axis is not required in drive 1.

You can then configure the SIMOLINK drive interface for drive 1 as slave ("transceiver") as follows:

```
;      Configuration of the SIMOLINK slave (transceiver) [140+150]
P60=4          ; Select the "board configuration" parameter menu
P740=1         ; SIMOLINK address of drive 1 (>0 = "transceiver")
P741=100ms     ; Message timeout
P742=1         ; "Low output power" adequate with
               ; short cable
P749.01=0,0    ; 1st SIMOLINK receive double word KK7031   [150.7] =
               ; Channel 0 of station 0 (i.e. of master) = path
               ; setpoint of virtual master axis in drive 2
P749.02=0,1    ; 2nd SIMOLINK receive double word KK7032 =
               ; channel 1 of master (reserve channel)    [150.7]
P60=1          ; Exit board configuration
               ; SLB send words do not have to be wired, since
               ; drive 1 is only to receive, not send data
```

9.7.2.15 Testing the Synchronization in the Application Example

Checking the SIMOLINK connection

Check whether the SIMOLINK fiber-optic cables are correctly connected "crosswise" to the SLB boards (each transmitter connected to the receiver of the other drive). If the wiring and configuration is correct, all 3 LEDs should flash on all SLB boards.

Start the virtual master axis on drive 2 with the start switch (terminal 7), and check at r750.01 and .02 [150.5] on drive 1 whether the virtual master value transmitted from drive 2 is received correctly.

The further procedure for testing the synchronization function is described below with reference to the example of the 2-axis demonstration pack. An LED light beam visible through both flywheels indicates that the synchronization function is operating correctly.

Establishing the correct start position through homing

Start several homing procedures for both drives, as described in step 9. Set the home position offsets with machine data MD4 = U501.04 by trial and error starting with value "0" until the desired starting position for the synchronization is reached (a reminder: a value of 3600 LU in MD4 means one motor revolution). With the 2-axis demonstration pack, the start position is as follows on the two flywheels:

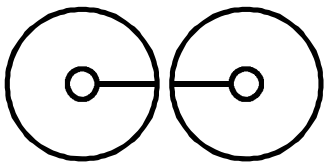

Fig. 9-47 Start Position for Synchronization with 2-Axis Demonstration Pack

In this start position, you will see the LED through the drilled holes on both wheels.

Testing the synchronization function

When you have configured a suitable MD4 setting on both drives, please proceed as follows in order to test the synchronization via SIMOLINK:

a) Set 0 V on the setpoint potentiometer of drive 2; this corresponds to a velocity setpoint of 0 %.

b) Perform the homing procedure for both drives, in order to establish the start position in the sketch above (⇨ with the 2-axis demonstration pack, the LED beam must be visible through both flywheels).

c) Cancel the start command for both drives (START = 0). Both drives are now in the start position, position-controlled.

d) Start the synchronization on the slave drive (drive 1) with START = 1. It does not yet start to move, because the virtual master on drive 2 has not yet been enabled, and defines a path setpoint of "0".

e) Start the master drive with START = 1 (drive 2). This activates the enable signal for the virtual master axis.

f) You can now start both drives with the potentiometer and modify the speed (0...10 V equals 0...MD23 equals 2778 min^{-1} in r230 [360]).

g) With all speeds, the LED beam should be visible through both flywheels if the synchronization is operating correctly.

End of application example 2

Application example 2 is now complete. When you have worked through all the steps in application example 2, you will have a sound overview of the "positioning" and "synchronization" functions and their connection and commissioning. You will have also received an introduction to the documentation available in an easy-to-understand example. The further steps required to commission your own customized application should now be much easier.

9.7.3 Synchronism with the virtual master axis by means of clock-synchronized Profibus (suitable for private study)

The objective is to use the equidistance (clock synchronism) of the PROFIBUS to achieve synchronism via the PROFIBUS only and to dispense with SIMOLINK, which has been necessary to replace the data for synchronous operation.

NOTE

PROFIBUS operation is only possible with an external bus master e.g. SIMATIC S7 (see MC Compendium Section 8.2.2. ff).

The "Drive ES Basic" tool is needed for configuring. A CBP2 is required for the "clock synchronous PROFIBUS" mode. The number of (clock synchronous) nodes is limited to max. 10..

Make sure that the baud rate of the PROFIBUS is set to 12 Mbit/s so that the data of the technology are transmitted fast enough. Also, select PROFIBUS as the synchronization source in parameter P744 (SIMOLINK board, function diagram 140).

Finally, activate the equidistance (clock synchronism) when configuring the hardware under the S7 project.

To achieve this, make the following connections on the drive control units:

1) Select PROFIBUS as the synchronization source (in function diagram SIMOLINK Board FP140)

```
WRITE   744   1   0   ; Synchronization source PROFIBUS
WRITE   744   2   1   ; Synchronization source PROFIBUS
```

2) Provision of transmit data (function diagram 125) on the "master axis" unit

   The position and velocity setpoint of the virtual master axis (KK817 and KK820) and the generated sign-of-life signal (K255) are entered in the transmit data (parameter 734).

```
WRITE   734   15   820 ; Velocity of the virtual master axis on PROFIBUS
WRITE   734   16   820 ; Velocity of the virtual master axis on PROFIBUS
WRITE   734   11   817 ; Position of the virtual master axis on PROFIBUS
WRITE   734   12   817 ; Position of the virtual master axis on PROFIBUS
WRITE   734   13   255 ; Sign-of-life signal on PROFIBUS
```

3) Connect the position setpoint extrapolator (U800.1, U800.2) and sign-of-life signal monitoring (U807) (FP 170) to the receive data of the PROFIBUS (FP 120).

```
WRITE   807    0    3013   ; Sign-of-life signal from PROFIBUS
                             to sign-of-life monitoring
WRITE   2800   1    3041   ; Position of the virtual master axis
                             from PROFIBUS to extrapolator
WRITE   2800   2    3045   ; Velocity of the virtual master axis
                             from PROFIBUS to extrapolator
```

4) Sign-of-life signal valid (B0241) on communication fault (U801) of the position setpoint extrapolator connect, set axis cycle length (U802) of the extrapolator.

```
WRITE   2801   0    241    ; Sign-of-life signal to position
                             extrapolator
WRITE   2802   0    4096   ; Axis cycle length extrapolator
                             (based on U687!)
```

5) Connect position/velocity setpoint input of the synchronism (U600/U606) to the position setpoint output.

```
WRITE   2600   3    846    ; Position VM from extrapolator to
                             SY input position setpoint
WRITE   2600   6    847    ; Speed setpoint VM from
                             extrapolator to SY input
                             V setpoint [%]
WRITE   2606   0    2      ; Switchover master value source
```

6) Set the nominal master velocity of the virtual master axis (U682 in function diagram 832) and the normalization velocity master in synchronism (U607.2 in function diagram 834) to the same value.

```
WRITE   2682   0    x      ; Nominal master velocity of the
                             virtual master axis
WRITE   2607   2    x      ; Normalization velocity master in
                             synchronism
```

7) Insert blocks into time slots

```
WRITE   2953   20   4      ; Generate time slot sign-of-life (only
                             on "master axis")
WRITE   2953   21   4      ; Evaluate time slot sign-of-life
                             (on "master" and "slave axis")
WRITE   2953   29   4      ; Time slot position extrapolation (on
                             "master" and "slave axis")
WRITE   2953   33   (4)    ; Only insert in time slot with
                             autonomous synchronism, with
                             synchronism via the operating mode
                             manager the factory setting 20 is
                             retained
WRITE   2953   34   4      ; Time slot "virtual master axis"
WRITE   2953   40   4      ; Insert technology setpoints at the
                             input of the position controller into a
                             slower time slot
                             (instead of factory setting =3)
```

8) Define the execution sequence

The consecutive events are inserted in the time slots in such a way that they are also executed consecutively and with high priority (at the beginning of the time slot).

```
WRITE   2960   11   0      ; PROFIBUS receive (factory setting:
                             110)
WRITE   2963   21   1      ; Sign-of-life signal receive (factory
                             setting: 3210)
WRITE   2963   29   2      ; Position setpoint extrapolator
                             (factory setting: 3290)
WRITE   2963   32   3      ; Operating mode manager (factory
                             setting: 3320)
```

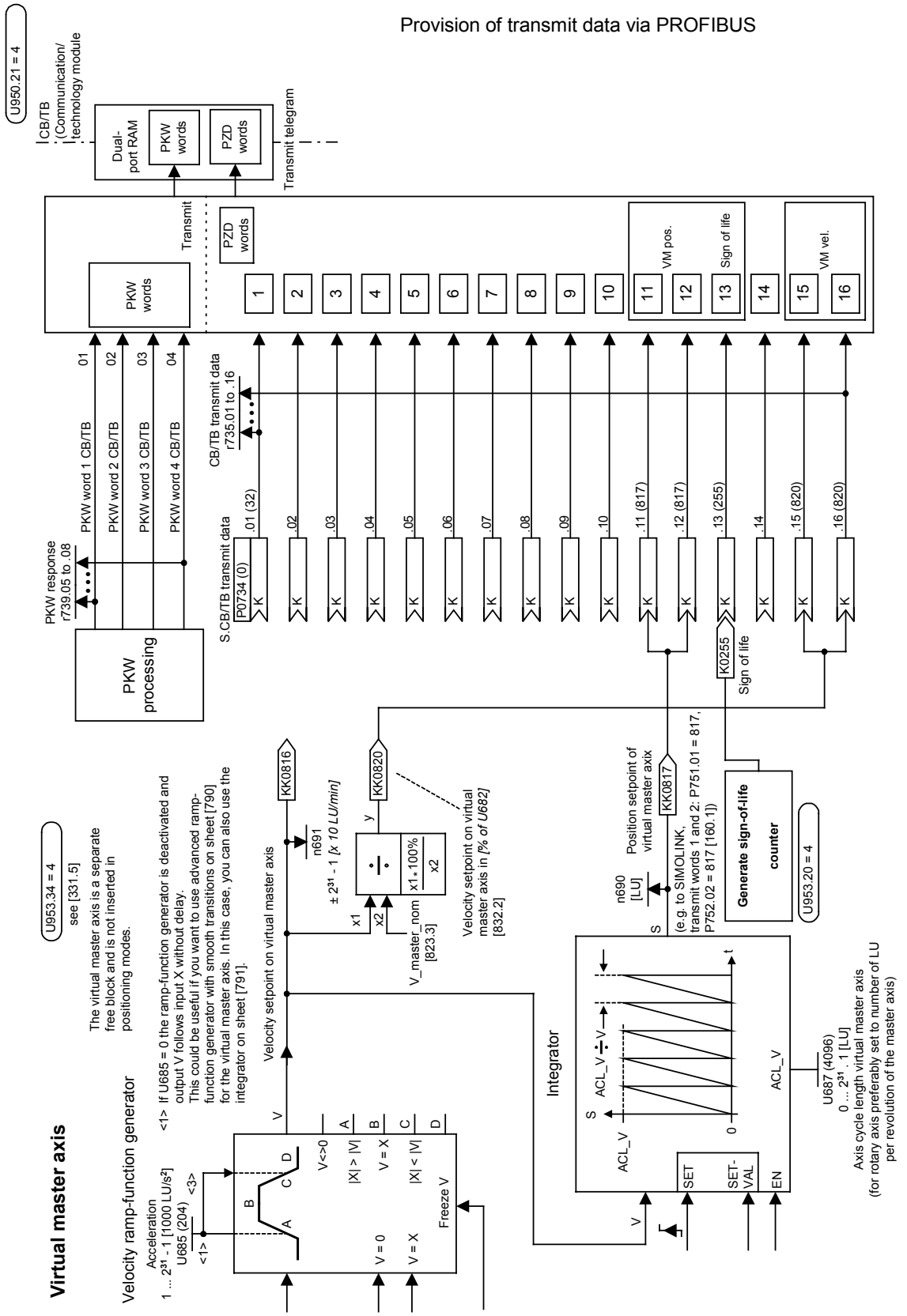
Provision of transmit data via PROFIBUS
U950.21 = 4
CB/TB (Communication/ technology module
Dual-port RAM
PKW words
PZD words
Transmit telegram
Transmit
PKW words
PZD words
1
2
3
4
5
6
7
8
9
10
11 VM pos.
12
13 Sign of life
14
15 VM vel.
16
PKW word 1 CB/TB 01
PKW word 2 CB/TB 02
PKW word 3 CB/TB 03
PKW word 4 CB/TB 04
PKW response r739.05 to .08
PKW processing
CB/TB transmit data r735.01 to .16
S.CB/TB transmit data P0734 (0)
.01 (32)
.11 (817)
.12 (817)
.13 (255)
.14
.15 (820)
.16 (820)
K0255
Sign of life
Virtual master axis
U953.34 = 4 see [331.5]
The virtual master axis is a separate free block and is not inserted in positioning modes.
Velocity ramp-function generator
Acceleration 1 ... 2^31 - 1 [1000 LU/s²] U685 (204)
<1> If U685 = 0 the ramp-function generator is deactivated and output V follows input X without delay. This could be useful if you want to use advanced ramp-function generator with smooth transitions on sheet [790] for the virtual master axis. In this case, you can also use the integrator on sheet [791].
Velocity setpoint on virtual master axis
KK0816
n691
± 2^31 - 1 [x 10 LU/min]
KK0820
x1
x2
V_master_nom [823.3]
Velocity setpoint on virtual master axis in [% of U682] [832.2]
V<>0
|X| > |V|
V = X
|X| < |V|
V = 0
V = X
Freeze V
Integrator
ACL_V ÷ V
ACL_V
SET
SET-VAL
EN
U687 (4096) 0 ... 2^31 - 1 [LU] Axis cycle length virtual master axis (for rotary axis preferably set to number of LU per revolution of the master axis)
n690 [LU]
Position setpoint of virtual master axix
KK0817
(e.g. to SIMOLINK, transmit words 1 and 2: P751.01 = 817, P752.02 = 817 [160.1])
Generate sign-of-life counter
U953.20 = 4

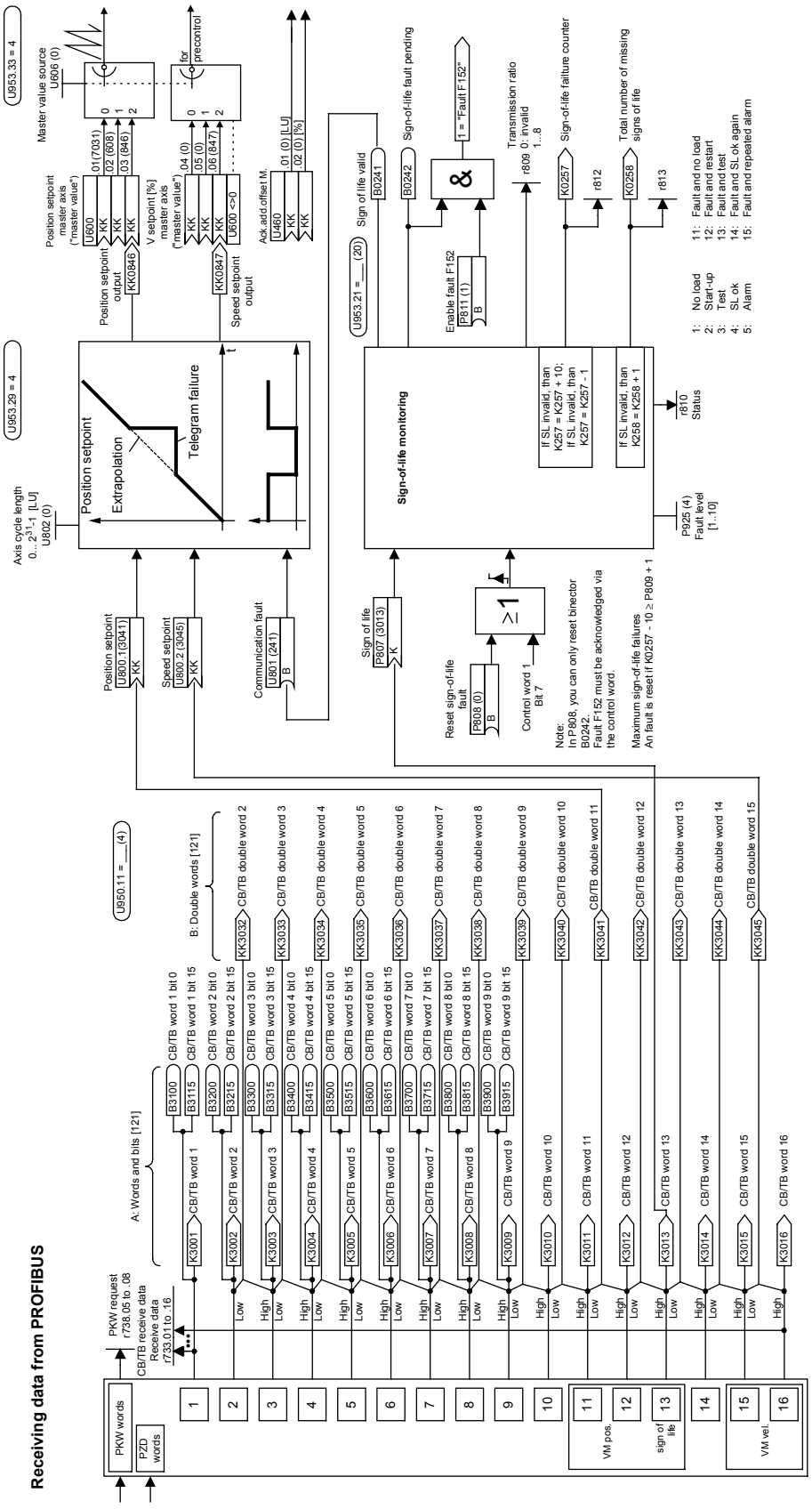
Receiving data from PROFIBUS
PKW words
PZD words
PKW request r738.05 to .08
CB/TB receive data Receive data r733.01 to .16
A: Words and bits [121]
B: Double words [121]
U950.11 = ___(41)
CB/TB word 1 bit 0
CB/TB word 1 bit 15
CB/TB word 2 bit 0
CB/TB word 2 bit 15
CB/TB word 3 bit 0
CB/TB word 3 bit 15
CB/TB word 4 bit 0
CB/TB word 4 bit 15
CB/TB word 5 bit 0
CB/TB word 5 bit 15
CB/TB word 6 bit 0
CB/TB word 6 bit 15
CB/TB word 7 bit 0
CB/TB word 7 bit 15
CB/TB word 8 bit 0
CB/TB word 8 bit 15
CB/TB word 9 bit 0
CB/TB word 9 bit 15
CB/TB word 1
CB/TB word 2
CB/TB word 3
CB/TB word 4
CB/TB word 5
CB/TB word 6
CB/TB word 7
CB/TB word 8
CB/TB word 9
CB/TB word 10
CB/TB word 11
CB/TB word 12
CB/TB word 13
CB/TB word 14
CB/TB word 15
CB/TB word 16
CB/TB double word 2
CB/TB double word 3
CB/TB double word 4
CB/TB double word 5
CB/TB double word 6
CB/TB double word 7
CB/TB double word 8
CB/TB double word 9
CB/TB double word 10
CB/TB double word 11
CB/TB double word 12
CB/TB double word 13
CB/TB double word 14
CB/TB double word 15
VM pos.
sign of life
VM vel.
U953.33 = 4
Master value source U606 (0)
for precontrol
Position setpoint master axis ("master value")
Position setpoint output
V setpoint [%] master axis ("master value")
Speed setpoint output
Ack. add. offset M.
U953.29 = 4
Axis cycle length 0...2^31-1 [LU] U802 (0)
Position setpoint
Extrapolation
Telegram failure
Communication fault
Sign of life valid
U953.21 = ___(20)
Sign-of-life fault pending
Enable fault F152
Transmission ratio
Sign-of-life failure counter
Total number of missing signs of life
Sign-of-life monitoring
Reset sign-of-life fault
Control word 1 Bit 7
Note: In P808, you can only reset binector B0242. Fault F152 must be acknowledged via the control word.
Maximum sign-of-life failures An fault is reset if K0257 - 10 ≥ P809 + 1
If SL invalid, then K257 = K257 + 10; If SL invalid, then K257 = K257 - 1
If SL invalid, then K258 = K258 + 1
r810 Status
P925 (4) Fault level [1..10]
1: No load
2: Start-up
3: Test
4: SL ok
5: Alarm
11: Fault and no load
12: Fault and restart
13: Fault and test
14: Fault and SL ok again
15: Fault and repeated alarm

Setting of hardware configuration

As stated above, the master value (KK817, KK820, FD 832) and the sign-of-life signal (K255, FP 170) are routed to the PROFIBUS where they are read again and connected on.

To ensure that these values are correctly routed to the PROFIBUS and can be read again by it, first adapt the hardware configuration of Step 7. GMC control must continue to be operable as usual.

To be able to use GMC control at all, make sure that GMC Basic has been installed and that the project has been adapted using the example P7MC1_EX.

Good help with this is available in file "Getting_started_mc_10.pdf" on the DriveMonitor CD under path: Gmc\Getting_Started\English.

Please note that in the DB 100, you must enter the PKW and PZD addresses for the axis concerned in accordance with the hardware configuration.

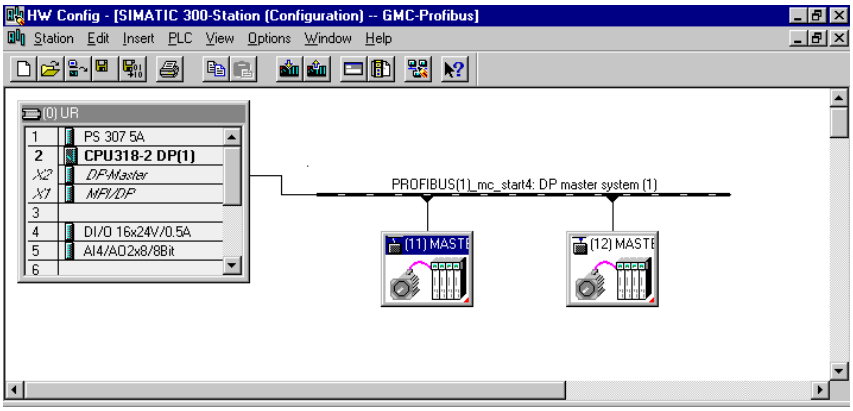

Fig. 9-48 Hardware configuration

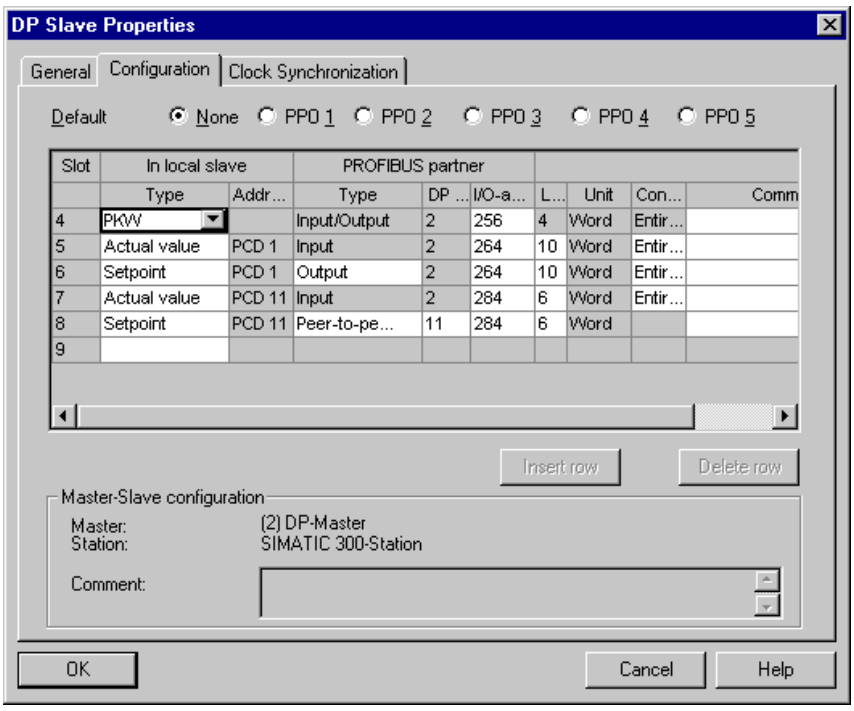

Fig. 9-49 Master axis CBP address 11

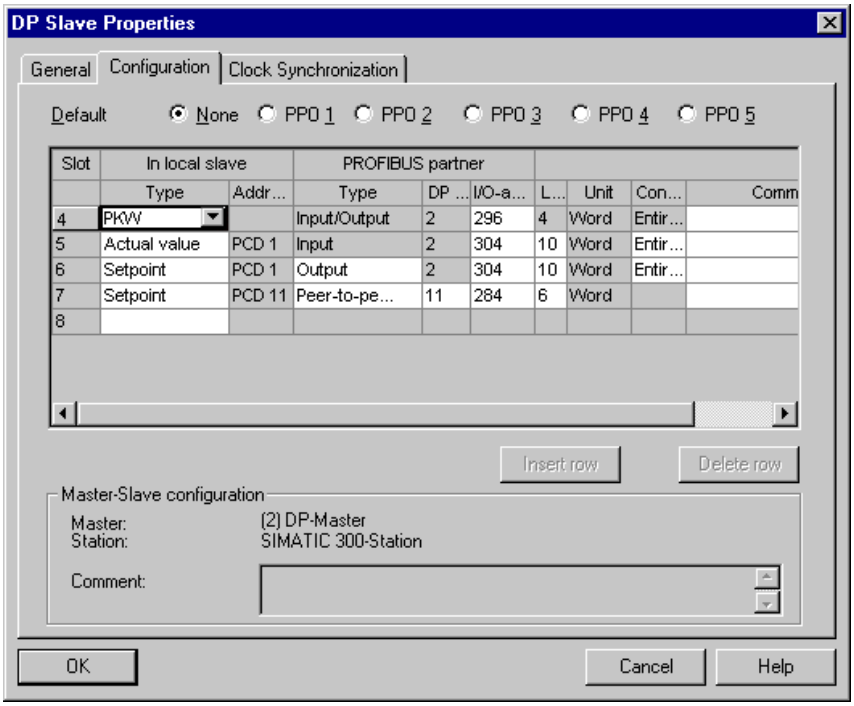

Fig. 9-50 Slave axis CBP address 12

Fig. 9-48 shows the hardware configuration. The left converter (drive unit), the master axis "dispatcher" (on it the virtual master axis is calculated) has PROFIBUS address 11. The right-hand converter, "transceiver" (it reads the position setpoint, i.e. the value of the virtual master axis from the "dispatcher") has address 12.

The additional six words to be sent (KK817, KK820 and K255) are routed to the bus from the "dispatcher" as the actual value. This is shown in Fig. 9-49 under slot 7.

They are then read by the "dispatcher" itself via slave-to-slave traffic (Fig. 9-49 Slot 8) and by the "transceiver" by slave-to-slave traffic (Fig. 9-50 Slot 7).

Via slots 4 to 6 (Fig. 9-49 and Fig. 9-50) PPO type 5 is emulated in the two converters.

370.0	X_axes.i_number_axes	INT	1	2	Number of axes in GMC_DB_ORG
372.0	X_axes.X_axis1.i_axis_type	INT	0	2	<1> = M7, <2> = MCT, <3> = M7/MCT
374.0	X_axes.X_axis1.i_dbw_no_cmd	INT	0	0	Pointer of the commands
376.0	X_axes.X_axis1.i_m7_no	INT	0	0	Number of the M7 (1..4)
378.0	X_axes.X_axis1.i_log_axis_no	INT	0	0	Logical axis number 1..n
380.0	X_axes.X_axis1.i_profibus_addr	INT	0	11	MCT PROFIBUS address
382.0	X_axes.X_axis1.i_ppkw	INT	0	256	I/O area, PKW adress of the MCT
384.0	X_axes.X_axis1.i_ppzd	INT	0	264	I/O area, PZD adress of the MCT
386.0	X_axes.X_axis1.res7	INT	0	0	
388.0	X_axes.X_axis2.i_axis_type	INT	0	2	<1> = M7, <2> = MCT, <3> = M7/MCT
390.0	X_axes.X_axis2.i_dbw_no_cmd	INT	0	0	Pointer of the commands
392.0	X_axes.X_axis2.i_m7_no	INT	0	0	Number of the M7 (1..4)
394.0	X_axes.X_axis2.i_log_axis_no	INT	0	0	Logical axis number 1..n
396.0	X_axes.X_axis2.i_profibus_addr	INT	0	12	MCT PROFIBUS address
398.0	X_axes.X_axis2.i_ppkw	INT	0	296	I/O area, PKW adress of the MCT
400.0	X_axes.X_axis2.i_ppzd	INT	0	304	I/O area, PZD adress of the MCT
402.0	X_axes.X_axis2.res7	INT	0	0	

Fig. 9-51 DB 100 in data view

For GMC to run correctly, as stated above, you must make a few changes in DB 100.

In DB 100, go to the end of the block in declaration view and copy the last line, that is axis 1 and rename the copy axis 2. After that, you can switch to data view and continue to the end of the block. Fig. 9-51 shows the end of block DB 100 in data view. Here you must enter the number of axes, the PROFIBUS address of the axes, and the base address of the PKW and of the PZD range for the axis in question. This information must match that of the hardware configuration.

Activation of the equidistance

In the hardware configuration, a window is opened on the CPU under X2 DP master with the right mouse button. In it you can select the object properties.

- A new window opens, in which you can click on PROFIBUS properties.
- Click on Properties again.
- Click on the tab card System settings.
- Select the transmission rate 12 Mbit/s.
- Click on Options.
- Activate "Equidistant Profibus" in the window "Constant Bus Cycle Time" (cf.: Fig. 9-52).

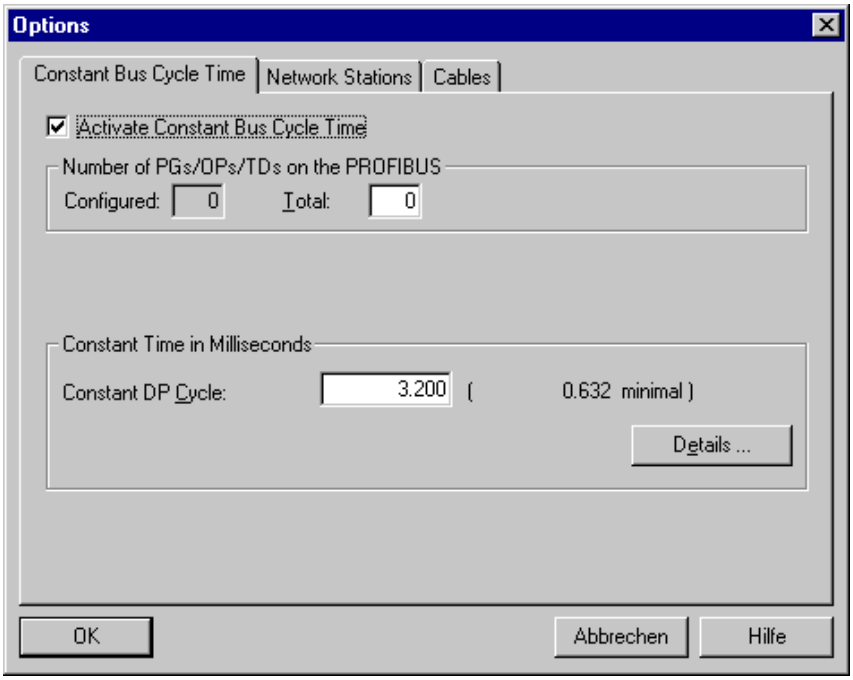

Fig. 9-52 Activation of the equidistance on the CPU

On the converter, you must also activate the equidistance. To do that, click on the converter with the right mouse button and select the tab card "Clock Synchronization" (Fig. 9-53).

Now synchronize the drive with the equidistant DP cycle. Then click on "Alignment".

Proceed in the same way for the second converter.

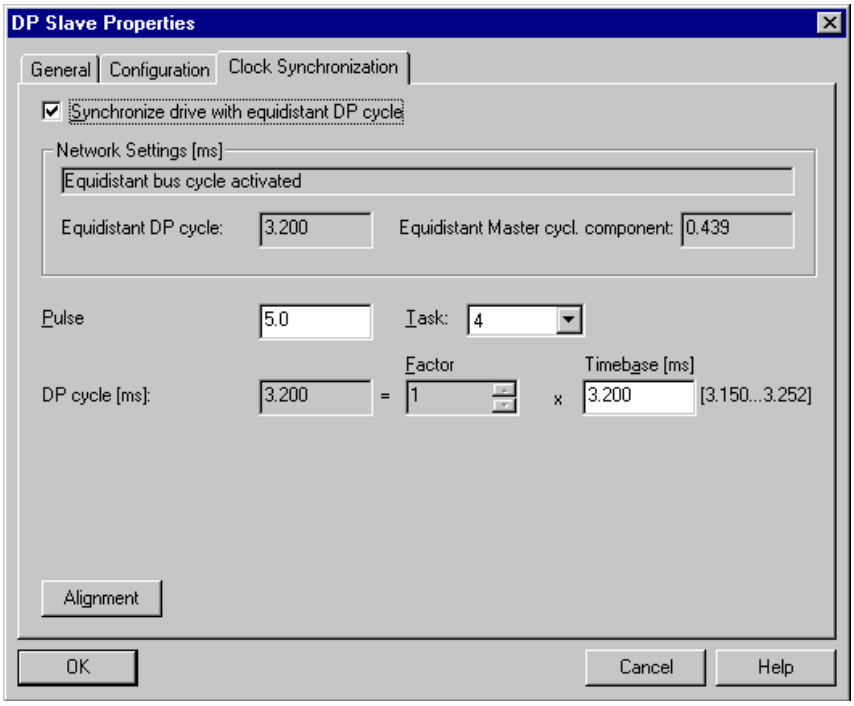

Fig. 9-53 Activation of the equidistance on the converter

On tab card "General" you can check the baud rate. If it is not 12 Mbit/s, you can set it under Properties, Network settings.

Please note:

If the CPU is reset, communication via your PROFIBUS interface is not possible.

You must load the hardware configuration into the CPU via the MPI interface. After that, communication via the PROFIBUS interface will be possible again. If you reset the CPU via the PROFIBUS interface, communication is interrupted.

If you address the PLC via the MPI or PROFIBUS interface, you must select the PG/PC interface in the SIMATIC Manager under "Extras".

9.7.4 Roll Feed

(under development)

9.7.5 Application Using the SIMATIC S7 GMC Software

(under development)

9.8 Commissioning the Technology

9.8.1 Measurement and Diagnostics Resources

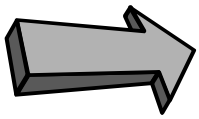

Commissioning step:

Familiarize yourself with the measurement and diagnostics resources:

The following measurement and diagnostics resources are available for MASTERDRIVES MC:

- **Faults, warnings, diagnostics**:
  Read the section of the same name at the end of this chapter of the Compendium to find out which warnings and faults are generated by the technology and which technology signals you can track in the monitoring parameters.
- **Connector status in display parameters:**
  You can connect any connector or binector to a display parameter, in order to track signals during commissioning and troubleshooting. These freely connectable display parameters are listed on sheets [30] and [705] of the function diagram.

  Example:
  U045=803 [705.7] => You can observe the status of binector B803 "engaging/disengaging cycle running" [834.5] in display parameter n046
- **Recording signals with the integrated trace function:**
  A high-speed real-time trace function is available on the MASTERDRIVES MC for recording any connectors and binectors. You can operate this function conveniently with DriveMonitor. The trace function has the following features (see also the online help in DriveMonitor):
  - Flexible setting of time resolution from 500 µs
  - 8 measuring channels
  - Memory capacity: over 10 000 samples per channel
  - Flexible setting of zero offset and gain for the signal display across large range
  - Settable
  - Flexible setting of trigger condition (trigger signal, trigger threshold, post/pre-trigger)

NOTE

Binectors that are to be traced must first be entered in a connector using a binector/connector converter [720].

- **Recording signals with an oscilloscope or continuous-line recorder:**
  The analog outputs on the converter terminal strip [80] and terminal expansion boards EB1 and EB2 [Y01...Y08] are available for this purpose.
- **Checking high-speed switching operations on the PMU:**
  Thanks to its extremely high refresh time, the 7-segment PMU parameter monitoring unit is ideal for checking high-speed switching operations. You can monitor short-term level changes in all positioning control and status signals on the PMU in n541.01... .04. This is not possible on the OP1S or in DriveMonitor because of the serial transfer times.

9.8.2 Commissioning the Technology

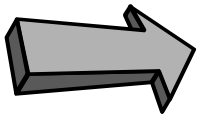

Commissioning step:

Use an application example to get started with the technology:

If you are not yet familiar with the positioning and synchronization functions in MASTERDRIVES MC, you should study the example nearest to your application in the "Application Examples" section using one or two MASTERDRIVES MC units and one or two idling motors (you only need 2 drives for synchronization). In application example 2, for example, you are shown how to operate 2 MASTERDRIVES MC converters in position control and synchronization mode. The complete actuation system is implemented via the converter terminal strip (using switches and a potentiometer). The application example also guides you through the available documentation and the relevant function diagrams.

The section below provides you with a general commissioning guide which takes you step-by-step through the commissioning procedure. It is impossible, of course, to cater for all special applications in this guide.

9.8.3 Checking the Speed/Position Controller

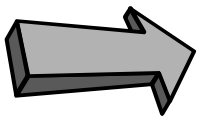

Commissioning step:

Check the speed/position controller:

If you are in any doubt as to whether the correct speed/position controller, the correct encoder cable or the correct sensor board are mounted, you should carry out the following checks:

Checking the encoder:

- For 1FK6 and 1FT6 motors, optical sin/cos encoder ERN1387/1381 is identified by the appearance of "Optical Encoder" on the nameplate.
- For 1FK6 and 1FT6 motors, multiturn absolute encoder EQN1325 is identified by the appearance of "Absolute Encoder" on the nameplate.
- For 1FK6 and 1FT6 motors, the resolver is identified by the appearance of "Resolver" on the nameplate or by the absence of an encoder type designation on the nameplate.

Checking the encoder cable for 1FK6, 1FT6 and 1PA6 motors:

- The correct encoder cable for the **resolver** can be identified from the order number "6FX☐002-2CF01-☐☐☐0", which is printed in red on the cable (☐ = option and length specification).
- The correct encoder cable for the **ERN1387/1381** can be identified from the order number "6FX☐002-2CA31-☐☐☐0", which is printed in red on the cable (☐ = option and length specification).
- The correct encoder cable for multiturn absolute encoder **EQN1325** can be identified from the order number "6FX☐002-2EQ00-☐☐☐0", which is printed in red on the cable (☐ = option and length specification).
- The correct encoder cable for the **pulse encoder** (with unipolar HTL signals) can be identified from the order number "6SX7002-0☐H00-☐☐☐0", which is printed in red on the cable (☐ = option and length specification).

The connector and terminal assignments on the motor and sensor boards are described in Catalog DA65.1.

Checking the sensor board:

MASTERDRIVES MC automatically detects an installed sensor board. You can check in display parameter r826 whether the correct sensor board is installed (see parameter list). The sensor boards have the following codes:

- 111 = SBP (suitable for ROD431 etc.)
- 112 = SBM (suitable for ERN1397, ECN1313, EQN1325, SSI encoders from Siemens, Fraba, TWK, TR, Stegmann, linear scale LC181 etc. The ASIC chip on the SBM should have firmware version V1.3 or higher.)
- 113 = SBM2 (same as SBM with additional analog fine resolution on the board)
- 114 = SBR1 (for resolver, without pulse encoder simulation)
- 115 = SBR2 (for resolver, with pulse encoder simulation)

Check the switches and hardware parameters on sensor boards SBx if special encoders or third-party motors are used, as described in the "Encoder Evaluation" sections in "Brief Description of the Technology Functions" and in the hardware instruction manual for the SBx board.

9.8.4 Defining the Actual Speed Value Normalization

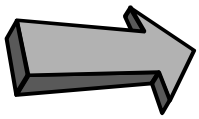

Commissioning step:

Set the actual speed value normalization with P353:

First, set the actual speed normalization in parameter P353 [20] as follows:

- Define the maximum velocity (limit velocity), tolerated by the mechanical system of your machine, which must not be exceeded under any circumstances.
- In P353 enter the speed in [min^{-1}] at which the motor encoder rotates at this maximum velocity (allowing for transmission ratios, spindle pitches, etc.). Before entering the value in P353 you must change to the "drive settings" parameter menu with P60 = 5. You must exit this menu with P60 = 1 when the input is complete.
- If you use an external machine encoder for position sensing, enter in P355 the speed in [min^{-1}] at which the external encoder rotates at the maximum velocity.

9.8.5 Commissioning the MASTERDRIVES Basic Functions

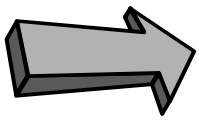

Commissioning step:

Commission the MASTERDRIVES basic unit:

NOTE

The following commissioning guide assumes that you have commissioned the MASTERDRIVES basic functions completely as described in Chapter 6 of this Compendium.

Commission the basic drive functions by following the steps below:

- Parameter reset (factory setting if necessary)
- Board configuration
- Drive settings (enter hardware and motor data)
- If possible, decouple the drive from the working machine and test it in speed control mode; optimize the speed controller

Set, commission and test the parameters for the communication functions (in the "board configuration") parameter menu (if field bus CBx and/or SIMOLINK SLB interface installed).

9.8.6 Defining the Length Unit LU

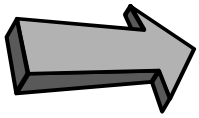

Commissioning step:

Define the length unit LU:

Define the length unit (LU) in which you want to define the positional values. Please note that the position is defined via field bus and parameter without decimal places in [LU]. For example, if you want to define the target positions to a resolution of 0.001 mm, the length unit 1 LU = 1 µm. If you want to define a position setpoint of 12.345 mm, MASTERDRIVES MC expects the setpoint 12345.

With pure synchronization axes (electronic shaft/gearbox), you will normally choose one increment of the position encoder as the LU (e.g. 1/4096 of an encoder revolution with P171 = 12 [330.3]).

9.8.7 Defining the Actual Value Weighting Factor (AVWF)

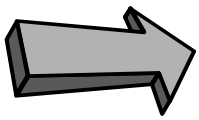

Commissioning step:

Check the resolution and value range of the actual position (P171):

Resolution of the actual position

NOTE

In the factory setting, the resolution of the actual position value of the motor encoder after shift division is 4096 steps per encoder revolution [330.4]. This is adequate for most applications.

In some documents the german abreviation IBF may be used instead of AVWF.

The following section describes exceptional circumstances where the resolution has to be increased or reduced with P171 [330.3].

The resolution of the actual position on the encoder after shift division and before multiplication by the AVWF P169/170 is 4096 increments per encoder revolution in the factory setting. The rotor position KK090 [500 and 330.1] is resolved with 2^{32} steps per encoder revolution. This generates a positional value with 4096 increments per revolution as a result of the shift division by 2^{20} [330.4], due to the factory setting P171 = 12, i.e. the resolution is 12 bits. You will find detailed information on position detection in the section entitled "Position Sensing System for Motor Encoder".

Please note that although the actual position of the position sensing system has a range of 2^{32} LU, it is limited by the technology to a value range of -999 999 999 ... +999 999 999 LU [815.4].

Resolution with resolver

This resolution of the actual position value after shift division [330.3] of 4096 increments per motor revolution is exactly the same as the resolution implemented by the measuring system with a 2-pole resolver, and can virtually always remain unchanged when a resolver is used. Only if extremely long traversing distances are involved, can it become necessary to reduce the resolution (see following example):

Example where the position resolution must be reduced with P171 < 12:

- LU = 1/4096th of an encoder revolution selected
- The traversing distance is over 244 000 encoder revolutions
- => The traversing range would no longer fit into the range of 999 999 999 LU in this case (999 999 999 LU traversing range / 4096 LU per encoder revolution = 244 140 encoder revolutions)

Resolution with optical sin/cos encoder

With optical sin/cos encoder ERN1387, the resolution of the measuring system is 2^{24} = 16 777 216 steps per motor revolution: after "pulse quadrupling" (evaluation of zero crossings), each 2048 sine and cosine periods per revolution produce a "digital rough resolution" of 8196 steps per motor revolution. The analog fine amplitude evaluation of the sine/cosine signals resolves each quarter period with a further 2048 steps. If you want to use the full resolution of the ERN encoder for the positioning and synchronization functions, you must set P171 = 24, which reduces the resolution of the rotor position signal KK090 from 2^{32} to the actually implemented resolution of 2^{24}. However, if you use this setting and set the actual value weighting factor (AVWF) LU = 1 encoder increment, you can only achieve traversing ranges (with linear axes) or axis cycle lengths (with rotary axes) of 59.6 encoder revolutions, as the position setpoints and actual values can otherwise no longer be represented by the numeric range from -999 999 999 ... +999 999 999 LU (numeric range 999 999 999 LU / 16 777 216 LU per revolution 59.6 revolutions). For larger traversing distances, you must therefore reduce the resolution "artificially" by setting P171 to values < 24 or by selecting a smaller AVWFactor (i.e. a larger length unit LU).

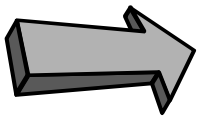

Commissioning step:

Enter the actual value weighting factor (AVWF) (P169/P170 or P152/P153):

Entering the actual value weighting factor (AVWF)

For the actual value weighting factor (AVWF), you must enter the number of length units per actual position increment (LU/increment) in parameter P169/P170 if you use the position sensing system [330] for the motor encoder in slot C, or in P152/P153, if you use an external machine encoder [335].

NOTE

- You must always enter 8 decimal places in the AVWF in P169 or P153, padding any non-significant decimal places with "0" (e.g.: AVWF = 1.5 LU/increments => P169 = 1. P170 = 5000000; P170 = 5 would result in an incorrect AVWF of 1.00000005 !!)
- Please check carefully whether the AVWF has been entered correctly. Many of the parameter and machine data settings described below refer to the length unit LU and must be entered again if the actual value weighting factor (AVWF) is changed.

It is normally recommended to use a length with three decimal places for the LU, e.g. 1 LU = 0.001 mm = 1 µm or 1 LU = 0.001°. This is particularly important if you use the SIMATIC S7 "Motion Control Configuring Package" software /1/, in which the OP screens always use 3 decimal places for length parameters.

With pure synchronization axes (electronic shaft/gearbox), the actual value weighting factor (AVWF) can frequently remain in the factory setting AVWF = 1.0, i.e. 1 LU = 1 position encoder increment.

The "Position Sensing System for Motor Encoder" section includes an example calculation for determining the AVWFactor.

9.8.8 Defining the Maximum Traversing Velocity

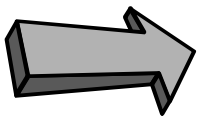

Commissioning step:

Define the maximum traversing velocity (MD23, P205):

Enter the maximum traversing velocity, which you defined in Section 1, in P205 [340.2] and machine data MD23 (P550.23 [804]) in the unit [1000 LU/min]. MD23 should not be modified again unless absolutely necessary, since this machine data is a normalization value for the velocity setpoint output [817] and the acceleration ramps (MD41, MD42 and MD43) for the speed control modes "control" and "homing", and must correspond to the reference speed P353.

9.8.9 Procedure for Using the "GMC-BASIC" S7 Software

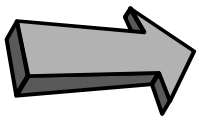

Commissioning step:

Configure the technology for the use of the SIMATIC S7 "Configuring Package" software:

If you use the GMC-BASIC software in the "Motion Control Configuring Package" /1/ for the SIMATIC S7, you should proceed as follows:

- Use DriveMonitor to download the parameter set shown in [806].
- The process data interface to the MASTERDRIVES converter (described in the "Control and Checkback Signals" chapter of the Function Description in manual /1/) is then set up via PPO type 5 (10 process data words with 16 bits each in send and in receive direction)
- This message assignment allows all the technology functions to be actuated from the SIMATIC S7 system. The message assignment can also be useful if you do not use the GMC-BASIC software (if a SIMATIC S5 or third-party controller is installed or if you use a field bus other than PROFIBUS-DP, e.g. CAN bus or USS).
- If you use an external machine encoder ("direct position sensing system") instead of the motor encoder, set the external machine encoder parameters in [815] as described in Section 10.
- The further commissioning procedure is performed from the SIMATIC S7 via PROFIBUS-DP. Direct parameter modification on the MASTERDRIVES unit is only required in exceptional circumstances.

9.8.10 Defining the Positioning Input Signals

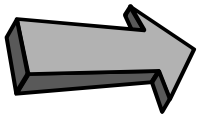

Commissioning step:

Define the positioning input signals:

- **Control commands**
- **Mode selection**
- **Velocity override**

All input signals of the technology can be "wired" flexibly using the BICO technology, e.g. from PROFIBUS-DP or the converter terminal strip. A hybrid configuration is also possible, with some signals being transmitted from the field bus and others from the MASTERDRIVES terminals.

Define which positioning input signals you need, and specify where they are transmitted from [809].

📖 All control and checkback signals for positioning are described in detail in the "Control and Checkback Signals" chapter of manual /1/; in the subsequent chapters of the Function Description you will also find timing charts detailing the control sequences for each of the modes. Special and exceptional situations are also described.

Control signals for positioning

If you want to define the control signals using the individual binectors, which can be selected with U710, (i.e. if U530 = 860 [809.7]), you must nest the "generation of positioning control signals" block in a sampling time with U953.32 (recommended value = 4).

Defining the modes

The first step is to define which modes you want to activate with [MODE_IN]. You will find detailed information on the individual modes in the "Function Description" Chapter of the "Motion Control for MASTERDRIVES MC and SIMATIC M7" manual /1/.
For example, if you only want to perform point-to-point positioning with incremental encoders, you require at least modes 2 and 3 ("homing" and "MDI"). In step 2 of application example 2, you will find a description of a simple method of mode activation via the converter terminals.

Check that the modes are defined correctly with display parameter n540.14 [809.8].

Defining the control commands and the override

Define which positioning control commands you want to use [809] and where they are to be transmitted from. For example, if you only want to use the point-to-point positioning (MDI) and homing modes, you only need to wire the following control commands in the simplest case (see also application example 2, step 2):

- Jog forwards [J_FWD] or
- Jog backwards [J_BWD], depending on the homing direction
- START [STA]

Decide whether and how you want to define a velocity override, or whether this can remain in the permanent factory setting of 100 % [809.1].

Check that the control commands are defined correctly in display parameters n541.01 and n541.02, and check the override input in n540.11.

Control signals for synchronization

If you only use the synchronization function, please refer to the "Synchronization Mode - Overview" section in "Brief Description of the Technology Functions" to find out which signals you need on sheet [809].

The special control commands for synchronization are shown in [832...839].

9.8.11 Defining the Positioning Status Signals

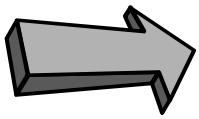

Commissioning step:

Define the positioning status signals you need:

All output signals of the technology can be "wired" flexibly using the BICO technology, e.g. to PROFIBUS-DP or the converter terminal strip.

Define which positioning input signals you need, and specify where they are transmitted to [811].

📖 All control and checkback signals for positioning are described in detail in the "Control and Checkback Signals" chapter of manual /1/.

Status signals for positioning

For example, a simple linear axis with MDI positioning and resolver might use the following checkback signals:

- Axis referenced [ARFD]
- Overtravel [OTR]
- Function terminated [FUT]
- Destination reached, axis stationary [DRS]
- Mode checkback [MODE_OUT]
- Start enable [ST_EN]

In this case, a movement should only be started from the external machine controller with the start command [STA] if the axis is referenced [ARFD], the required mode has been confirmed with [MODE_OUT] and the start enable [ST_EN] is active. Proper termination of the traversing movement is indicated by the status signals [DRS] and [FUT] using a handshake method.

Status signals for synchronization

If you only use the synchronization function, please refer to the "Synchronization Mode - Overview" section in "Brief Description of the Technology Functions" to find out which signals you need on sheet [811].

The special status signals for synchronization are shown in [832...839] (binectors B800...B820).

9.8.12 Connection and Parameters of the Position Sensing System

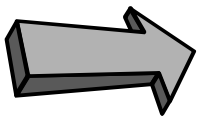

Commissioning step:

Set the parameters of the position sensing system:

Follow function diagram [815] in order to connect the technology with the position sensing system for the motor encoder [330] or an external machine encoder [335]. On this sheet, you will find two columns for each type of position sensing with the parameter settings (one for the control signals and one for the evaluation signals). In the factory setting, the motor encoder is prewired to a large extent. If you use the motor encoder – this is normally the case – you only need to change the following parameter settings:

```
; Position sensing for motor encoder in slot C  [330]:
-----------------------------------------------------
; Connect to technology [330] <==> [815] [836]:
U535=120    P172=302
U539=122    P174=301
            P184=303

; Additional connections usually required for synchronization
; [330] ==> [836.4] (not required for positioning!)
U665=122    ; Meas. pos. for pos. correction [330] ==> [836.4]
U671=120    ; Use actual position as initial set value
            ; for slave path setpoint

; Configuration for incremental encoder (resolver, ERN encoder...):
P183=xx01   ; No homing (e.g. for
            ; roll feed or synchronization)
P183=xx11   ; Home position to right of rough pulse/ BERO
            ; (see also MD5 and [821])
P183=xx21   ; Home position to left of rough pulse/ BERO
; Configuration for absolute encoder:
P183=xxx2   ;[330]
U950.19=3   ; Nest encoder detection in sampling time [260.8]
            ; If not standard encoder: set parameters as
            ; described in "Multiturn Encoder Evaluation"
```

If you want to use an external machine encoder for position sensing, the following parameter settings are required:

```
; Position sensing for external machine encoder [335]:
-----------------------------------------------------
; Connect to technology [335] <==> [815]:
U535=125     P155=302
U529=71      P156=302 (or =0 with absolute encoder)
U539=127     P157=301
U538=217     P158.01=303
U537.02=215  P158.02=304
             P167=303
             P162=308
             P160=307

; Additional connections usually required for synchronization
; [335] ==> [836.4] (not required for positioning!)
U665=127     ; Meas. pos. for pos. correction
U671=125     ; Use actual position as initial set value
             ; for slave path setpoint

; Configuration for incremental and absolute encoder
P166=xx01    ; No homing (e.g. for
             ; roll feed or synchronization)
P166=xx11    ; Home position to right of rough pulse/ BERO
             ; (see also MD5 and [821])
P166=xx21    ; Home position to left of rough pulse/ BERO

; Configuration for absolute encoder:
U950.18=3    ; Nest encoder detection in sampling time [270.8]
             ; If not standard encoder: set parameters as
             ; described in "Multiturn Encoder Evaluation"
```

9.8.13 Machine Data Input MD1...MD50

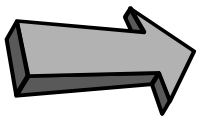

Commissioning step:

Enter the machine data:

Machine data MD1 to MD50 (parameters U501.01 to U501.50) are centralized settings required for positioning and synchronization from the perspective of the working machine and the mechanical transmission elements. The machine data are only active if they have been transferred with U502 = 2 when the drive is stationary (see [804]).

The machine data are listed in abbreviated format in [804].

📖 In the "Machine Data of the Technology" chapter of the Function Description in manual /1/ you will find a detailed description of all machine data. Please note that the decimal points specified in some of the machine data there are not entered in parameters U501.01...50, e.g. max. traversing velocity MD23 = 10000 LU/min Input on MASTERDRIVES MC: U501.23 = 10, in OP screen 10.000.

If you use the positioning functions, the following machine data are relevant:

Machine Data Overview for Positioning	
MD1, MD2, MD11	Encoder and axis type
MD3...MD7	Configuration of homing (only relevant for incremental encoders); see [821] and "Positioning Block" section
MD12...MD17	Software limit switches (for linear axis) in addition to following error and "in position" monitoring
MD18, MD19, MD23	Velocity, acceleration and deceleration ramps for position control modes (see above for MD23)
MD41...MD43	Acceleration and deceleration ramps for speed control modes (control and homing)
MD21, MD29...37, MD46, MD48	Special machine data for roll feed only
MD20, MD24, MD25, MD44	Special machine data for automatic mode only
MD38...MD40	Backlash compensation
MD45, MD47	Configuration of special digital I/Os for positioning
MD49, MD50	Weighting of velocity and acceleration precontrol
MD10	Offset value for absolute encoder

If you only use the synchronization function, you only need to modify the following machine data (see also the "Synchronization Mode - Overview" section in "Brief Description of the Technology Functions"):

Machine Data Overview for Synchronization		
	Synchronization as Positioning Mode	Synchronization as Free Block
Relevant machine data	MD11 MD49 MD12 *) Software limit switches ... MD13 *) ... for linear axis MD15 *) Following error monitoring - in motion MD23	MD11 Linear axis/rotary axis length [836.4] MD49 Weighting of velocity precontrol [836.7] MD23

9.8.14 Connecting the Technology to the Speed and Position Controller

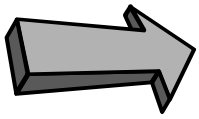

Commissioning step:

Connect the technology to the speed and position controllers:

[817] shows the setpoint outputs for the position controller and speed controller in addition to the enabling of the position controller by the technology. These connections are established to a large extent in the factory settings. Only the parameters below need to be modified (see the section entitled "Connecting the Technology to the Speed and Position Controllers" in application example 2):

```
; Connecting the technology to the position and speed controllers
P210.1=1, P211=1  ; Enable 1 and 2 for position controller
                  ; permanently set to "1" [340.1]
P220.1=131        ; Wire position controller output to
                  ; speed controller [340.8] ==> [360.1]
P194.1=120  (WE)  ; Connect actual pos. from motor
                  ; encoder [330] to actual value input [340.1] of
or                ; position controller ...
P194.1=125        ; ... or actual position of external machine
                  ; encoder, if one is used.
```

9.8.15 Setting the Parameters for the Positioning Modes

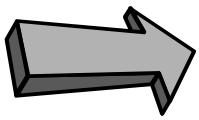

Commissioning step:

Set the parameters for the positioning modes:

(you can skip this step if you only want to use the synchronization function)

First, nest the positioning block in a sampling time (otherwise it is not calculated). A suitable sampling time, for example, is T4 (= 3.2 ms with a converter frequency of 5 kHz):

```
U953.32=4       ; Nest positioning modes in sampling time T4
                (=2^4*T0=16*200µs=3.2 ms with converter frequency 5 kHz)
```

Configure the MDI block definition and selection for the "MDI positioning" mode [823]. For the first commissioning steps, it is recommended to use MDI block 1:

```
; Define MDI block 1 for the first commissioning steps
U710.09=1       ; Select MDI block number 1 [809.3] ==> [823.3]
U550.1          ; Define 1st and 2nd G function e.g. value=9030
                ; ==> Positioning in absolute dimensions,
                ; acceleration override = 100 %
U550.2          ; Define target position, e.g. value = 1000 ==>
                ; target position 1000 LU
U550.3          ; Define traversing velocity in [10 LU/min],
                ; e.g. velocity 100 000 LU/min ==>
                ; input value = 10 000 LU (must be less than
                ; MD23)
```

9.8.16 Safety Information, Hardware Limit Switches

Before you start the positioning operation, please read the following safety information:

DANGER

- Please implement external control measures to ensure that the drive is isolated from the power supply immediately, and, if necessary, that the mechanical brake is engaged, in the event of hazardous conditions (e.g. safety guard open, hardware limit switch crossed, falling load hazard, etc.).
- Reduce the traversing velocity for the first commissioning steps by setting the velocity override [819] to a lower value, e.g. 1...4 %. You can monitor the current velocity override setting in display parameter n540.11 [809.8]. Virtually all traversing operations of the technology (except for home position reducing velocity and synchronization) are affected by the override.

You can use a contactor on the input or output side to isolate the drive from the power supply, or you can use option K80 "Safe STOP". Option K80 contains a special positive-action relay with a checkback contact which deactivates the actuation power for the power transistors (IGBTs). This prevents the rotation of the motor, however the motor is not electrically isolated from the power source. Option K80 is available for all MASTERDRIVES MC units except for the Compact PLUS AC units up to and including 4 kW and the Compact AC units. The "Safe STOP" function has been certified by the Institute for Work Safety.

9.8.17 Commissioning the Positioning Modes

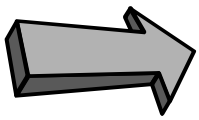

Commissioning step:

Commission the positioning modes:

(you can skip this step if you only want to use the synchronization functions)

Position encoder

First check the configuration of the encoder for position sensing with reference to the section entitled "Encoder Evaluation and Position Sensing". If you use the EQN absolute encoder, for example, enter the correct baud rate and the suitable zero offset in P149. Check the function of the position encoder by operating the drive by hand, if possible, and monitor the actual position value at n540.03 [815.4]. For a linear axis, check the setting of the software limit switches again in MD12 and MD13.

Control

First operate the drive under pure speed control in "control" mode 4. You can move the axis in jog mode with no evaluation of the software limit switches (in software version 1.2 only fixed levels of 10 % and 100 % are implemented as jog setpoints).

Setup

You can then move the drive with "jog forwards" [J_FWD] and "jog backwards" [J_BWD] under position control in mode 1 "setup" [819]. The software limit switches are evaluated with linear axes, however with incremental position encoders they are only evaluated if a homing procedure was performed after the system was switched on.

Optimizing the position controller

You can now optimize the position controller in setup mode: set the loop gain factor P204.1 of the position controller [340.3] for the optimum dynamic motion characteristic. In special situations, it can also be practical to smooth the actual position and position setpoint, in order to achieve an optimum control response - in P195.1 and P191.1 [340.2].

The integral component of the position controller is not normally used, i.e. P206.1 can remain in the factory setting "0" [340.4].

Homing

If you use "homing" [821], first align the rough pulse switch (BERO) as described in the "Position Sensing System for Motor Encoder" section in "Brief Description of the Technology Functions". When you have selected the mode [MODE_IN] = 2 you can start the homing procedure with the control command "jog forwards" [J_FWD] or "jog backwards" [J_BWD]. MD4 allows the exact assignment of the position coordinate to the machine zero (if you change MD4, please adjust the software limit switches MD12/13).

📖 You will find further information on "homing" mode in the "Brief Description of the Technology Functions" section and in the "Reference Point Approach" chapter of the Function Description of manual /1/.

Setting the monitoring systems

In the section below entitled "General Commissioning Information", you can read how to temporarily define more tolerant settings for following error and "in position" monitoring (warnings A140...142) as long as the position controller has not yet been optimized.

Please consult the section below entitled "Help, My Axis Won't Start!" if you have problems starting a traversing movement.

MDI positioning

By selecting mode 3 (= MDI) and defining the start command (0 => 1 edge at [STA]) you can start a traversing operation with the MDI block configured in "Setting the Parameters for the Positioning Modes". If you enter other target positions in U550.2 [823.5], you can approach different destinations with a start command.

Speed precontrol

In many cases, an improved dynamic response can be achieved with even smaller overshoot in movements by activating the speed precontrol. To do this, set the following parameters:

```
; Wiring the speed precontrol KK312
P209.1=312          ; Apply speed precontrol setpoint [817.7] [836.8]
                    ; to output of position controller [340.7]
```

The technology normally weights the precontrol value correctly, provided that MD49 is 100 % and P353 contains the exact motor speed that is reached at the maximum velocity in MD23. In special situations, scaling is also possible with MD49 [817.5]. If the speed is correctly precontrolled, output KK0132 and input r198 of the position controller will now only perform slight correction movements around "0" [340.5]. The trace function in the MASTERDRIVES is highly suitable for recording these signals. This function can be operated with DriveMonitor.

Jerk limiting

When using software versions < 1.30, if you set jerk limiting [817.4] via U505>0, you should not use the speed precontrol (KK312 = 0, see [817.6]), because otherwise the position control and speed control will "work against one another".

9.8.18 Configuring and Testing the Virtual Master Axis

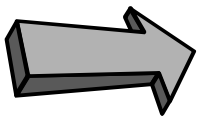

Commissioning step:

Commission the virtual master axis:

(you can skip this step if you only want to use the positioning functions)

Setting the parameters for the virtual master axis

The virtual master axis [832] generates a path setpoint KK817 and a velocity setpoint KK816 [832.8] for drives that are to be operated in synchronism. These setpoints are normally distributed to the drives over the SIMOLINK drive interface. The common velocity ramp-function generator for all drives should be calculated on the drive on which the virtual master axis is activated. The velocity setpoint that the ramp-function generator is to reach can be transmitted via a field bus (PROFIBUS-DP etc.) or as an analog signal.

The velocity ramp-function generator [832.5] integrated in the virtual master axis can be used as a ramp-function generator for simple applications and extremely short cycle times (of several 100 ms). For more demanding technical conditions, you should use the "comfort ramp-function generator" [790], which operates with rounded ramps and provides a large variety of control features and selection of acceleration/deceleration times. You can connect the output of the comfort ramp-function generator to the virtual master axis with U681 = 571 [832.1] and U683 = 0 [U832.3].

The virtual master axis is a separate free block (it can be used independent of positioning and synchronization). It is activated with the following parameter settings and should be nested in the same sampling time as the synchronization function, e.g.:

```
U953.34=4     ; Nest virtual master axis in sampling time T4
              ;(=2^4*T0=16*200µs=3.2 ms with converter frequency 5 kHz)
```

Connect the desired enable commands to the virtual master axis with U684 and U689 [832.2].

If you use the percentage-weighted input setpoint (U683 = 0), you must enter the maximum machine velocity in U682 [832.2]. In many cases, this will be the value already entered in MD23 (see section 16 and [836.7] [804]; N.B.: MD23 is entered in [1000 LU/min.] but U682 is entered in [10 LU/min]!)

Select the master axis cycle length with U687. In many cases this will be the number of LUs per encoder revolution or per revolution of the gearbox output shaft, e.g.:

```
U687=4096     ; Example: axis cycle length[832.6] for the virtual
              ; master = 4096 LU equals 1 encoder revolution with
              ; P171=12 [330.3]
```

Testing the virtual master axis

Proceed as follows to test the output setpoints of the virtual master axis approximately before connecting them to the SIMOLINK drive interface:

a) Apply a variable velocity setpoint to the setpoint input, e.g. from a potentiometer, or a fixed setpoint.

b) Connect the output setpoints to display parameter [30], e.g.
   - P32.01 = 820 => velocity setpoint can be monitored in r33.01 in [%]
   - P44.01 = 817 => path setpoint can be monitored in r44.01 (value range 0...axis cycle length)

c) Temporarily enter a long acceleration/deceleration time, e.g. from 20 s (U685 = 102 with an axis cycle length of 4096 LU and use of the integrated velocity ramp-function generator).

d) Enable the ramp-function generator, change the velocity setpoint and check the output signals in the display parameters.

9.8.19 Setting the Parameters for the Synchronization Block

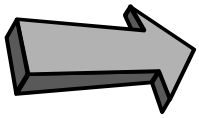

Commissioning step:

Set the parameters for the synchronization block:

(you can skip this step if you only want to use the positioning functions)

Nesting the synchronization block in a sampling time

There are two ways to activate the synchronization block:

The synchronization block [834...839] is normally nested as a mode in the positioning block with parameter U953.32 [802.8].

In special situations, you can also activate the synchronization block as a completely independent free block with U953.33. In this case, the positioning block must be deactivated (U953.32 = 20). In this case, the synchronization block requires less computing performance, since the mode manager [802] is not active. However, the input and output signal processing by the mode manager is non-operational, e.g. the start command [STA] is not required in order to start the synchronization and the following error monitoring and indication is omitted.

You will find more detailed information in the "Synchronization Mode - Overview" section in "Brief Description of the Technology Functions".

Selecting the input path setpoint for synchronization

U600 [834.1] is used to select the source for the path setpoint. If possible, the path setpoint from the virtual master axis on SIMOLINK receive channel 1 should be used. This selection is already configured with the factory settings U600.01 = 7031 and U606 = 0.

Wiring the master value for synchronization

The input path setpoint [834.1] is already received from SIMOLINK receive double word 1 KK7031 [150.6] with the factory setting (U600.01 = 7031 and U606 = 0). The master value is therefore correctly connected to the output of the virtual master axis - via the SIMOLINK interface (see the section entitled "Communication with the Technology").

Setting the master axis cycle length

The master axis cycle length U601 [834.2] must be set to the same value as the axis cycle length of the master axis, e.g. to U687 (see [832.6] and section 16). The master axis cycle length is required by the DVAL block in order to reproduce the "position saw-tooth signal" of the master correctly.

Setting the synchronization operation

Set the desired synchronization operation [OPERATION] in U602 [834.5]:

```
U602=0        ; Continuous operation with engaging/disengaging cycle
U602=1        ; Engaging cycle (see "Synchronization Block" section)
U602=2        ; Disengaging cycle (see "Synchronization Block")
```

Use U603 [836.4] to select the desired synchronization function [FUNCTION]:

```
U603=0        ; Angular synchronization 1:1
U603=1        ; Gear synchronization, gearbox: see [834.4]
U603=2        ; Electronic cam/table synchronization
              ; (see [839])
```

Setting the slave axis cycle length

For rotary axes, you normally set the number of LUs per position encoder revolution of the slave axis as the slave axis cycle length in U501.11 (MD11 [836.5 + 7]). MD11 is required in order to generate the correct "position setpoint saw-tooth signal" for the slave with the IVAL block [836.7] and the corresponding "actual position saw-tooth signal" with the actual position correction block KOR [836.8], in order to prevent overflows in the numeric range for a rotary axis.

Setting the parameters for position correction

You only need to modify further parameters for the position correction [836] if you use the printing index correction or want to evaluate a synchronization signal.

You will find detailed information on the parameters for position correction in the "Synchronization Functions" chapter of the Function Description in manual /1/.

9.8.20 Configuring and Testing the SIMOLINK Drive Connection

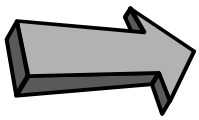

Commissioning step:

Commission the SIMOLINK drive connection:

(you can skip this step if you only want to use the positioning functions)

Setting the parameters for the SIMOLINK connection

To configure the SIMOLINK master (dispatcher) and the SIMOLINK slaves (transceivers), follow the procedure described in sections 13 and 14 of application example 2.

Testing the SIMOLINK connection

First check that the SIMOLINK fiber-optic cables are connected correctly from the transmit connector of one SLB board to the receive connector of the next SLB board, and that the SIMOLINK ring to the dispatcher is closed. If the configuration and wiring is correct, all 3 LEDs should flash on all SLB boards.

To test the SIMOLINK connection, you should repeat the procedure described above for "Testing the Virtual Master Axis" and check in r750 [150.5] that the output setpoints of the virtual master are received correctly by all drives.

9.8.21 Testing the Synchronization Functions

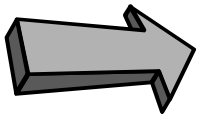

Commissioning step:

Commission the synchronization functions:

(you can skip this step if you only want to use the positioning functions)

To test the synchronization functions, proceed as follows:

a) If possible, disconnect the motors from the working machine.

b) Ensure that the initial speed and position setpoints for the master and slave drives are "0".

c) If possible, enable only one slave axis initially for operation with position and speed controller.

d) Temporarily set an extremely slow acceleration/deceleration ramp on the machine ramp-function generator (e.g. [832.5]).

e) Move the master axis carefully from velocity "0" to low values and check whether the slaves follow the motion correctly.

NOTE

Start position for synchronization

If you want to start the synchronization from a defined start position, you must first approach the position in a positioning mode and stop the drive at this point. You can then start the synchronization from speed "0".

With the "offset setting" [837], you can perform the orientation on-the-fly with reference to a synchronization marker after starting the synchronization mode. Although the offset setting is already implemented, it is not yet released for software version V1.2.

9.8.22 Help, My Axis Won't Start!

If your positioning axis won't start, the cause may be one of the following:

- The start command [STA] is not active or not wired correctly. Check in n541.01 [809.7] whether the start command is correctly applied to bit 2 of the positioning control word. A movement is always started on a 0 ⇨1 edge of the start command.
- The start enable [ST_EN] is missing. Check in n541.03 [811.7] whether the start enable is indicated in bit 10 of the positioning status word. A missing start enable can have the following causes:
  - The start command [STA] is still set to "1". The start enable is not activated until the start command is reset to "0".
  - The correct mode is not selected (see below)
  - A positioning warning is active A129...A255 (see display parameter n540.26 [818.5] and the section entitled "Warnings, Faults"). Remedy the cause of the warning and acknowledge it with a 0 ⇨1 edge of basic unit control bit 7 "acknowledge fault" [ACK_F] [180] or with the "P" button on the PMU.
  - The "reset technology" [RST] command is active. Check bit 6 of the positioning control word in n541.01 [809.7].
  - The "follow-up mode" command [FUM] is active. Check bit 5 of the positioning control word in n541.01 [809.7].
- The velocity override is = 0. Check n540.11 [809.8].
- The velocity setpoint defined in the NC block = 0.
- The correct mode was not selected with [MODE_IN]. Check the mode status [MODE_OUT] in n540.15 [811.4].
- An operating condition is missing (warning A130...A135). Check in r550 [180.7] that control bits OFF1, OFF2, and OFF3 are set to "0" and the inverter enable [ENC] is set to "1". You should also check the present converter status in r000.

- The axis is already in position. You can recognize this condition from the fact that the "function terminated" [FUT] status signal changes to "1" (or remains at "1") immediately after the 0 ⇨1 edge of the start command [STA]; you can monitor [FUT] in bit 27 of the positioning status word via n541.04 (preferably on the PMU). This can be the case with a rotary axis, for example, if the position setpoint that has already been approached is calculated as the target position by G90 through the "modulo rotary axis function" (e.g. the axis is positioned at 5°, and a position of 365° is defined ⇨ no G90 movement is performed). Check the effective position setpoint in n549.02 (the setpoint including all offset values and modulo functions). If you want to move a rotary axis through several revolutions, use relative positioning with G91; in this case, no modulo calculation is performed.
- The position setpoint is not correctly defined or is not wired correctly. Check the current position setpoint in n540.12 [823.6] for MDI mode.
- There is a converter fault. Bit 3 is enabled in basic unit status word 1 [200]). You can monitor the current fault and warning numbers in connector K0250 [510.4].
- There is a mismatch between the speed/position encoder, encoder cable and sensor board. Follow the instructions in "Checking the Speed/Position Controller".

9.8.23 General Commissioning Information

- Changes to the axis type **MD1** and **AVWF factor** do not become effective until the power supply to the electronics is switched off/on.
- Changes to **machine data** parameters MD1...MD50 do not become effective until they have been transferred (at a standstill) with U502 = 2 [804.3].
- If a **positioning fault A129...A255** is active, you cannot start a movement until you have remedied the cause of the fault and acknowledged the warning. Diagnostic parameter n540.26 [818] indicates whether a positioning fault is active. This parameter indicates the number A129...A255 or "0" if no positioning fault is active.
- Until you have optimized the position controller, it may be necessary to enter more tolerant settings in the following monitoring parameters:
  - **Following error monitoring** by increasing MD14/MD15 (affects **A140, A141**)
  - **"In-position monitoring"** by increasing MD16/MD17 (affects **A142**)
- If necessary, reduce the traversing velocity for the initial commissioning steps by changing the **velocity override** (in the factory setting with U708 [809.1]).

- **Display parameters** n540 and n541 provide important diagnostic information (see also the section below entitled "Faults, Warnings, Diagnostics").
- You should only change the **speed**/velocity **compensation** in P353, MD23 and P205 and the AVWF factor in exceptional circumstances, since this de-aligns the loop gain factor P204 [340], the speed setpoint K311 [817.6], the speed precontrol KK312 [817.6] and the acceleration/deceleration ramps MD41/MD42, thereby necessitating a series of commissioning steps.
- Use the trace function integrated in the MASTERDRIVES MC if you want to record the timing sequence of important internal signals. Any connector or binector can be recorded with the **trace function**. The curves can be monitored in DriveMonitor (oscilloscope function). See also the section above entitled "Measurement and Diagnostics Resources".
- No double-connectors can be wired from MASTERDRIVES to PROFIBUS with software versions V1.1 and older of the PROFIBUS-DP interface **CBP**. The software version can be read out in r069. In this case, a double-connector/connector converter must be used.
- A **torque increase** is only possible if P128 is increased simultaneously ==> increase P263, P264 and P128 together.

9.9 Faults, Warnings, Diagnostics

All faults and warnings of technology option F01 are described in the "Warnings, Faults" section of this Compendium.

The main faults and warnings generated by the positioning modes are shown on sheet [818]. On sheet [839.8] you will find warnings generated by the cam.

Faults

Technology option F01 generates fault F063 if an attempt is made to nest a technology block in a sampling time when the technology is not enabled [800.3].

Warnings

The technology also generates warnings A129...A255. When a warning is active, a movement cannot be started until the cause of the warning has been remedied. Unlike basic unit warnings, technology warnings must be acknowledged before the traversing movement can be started again. The warnings are acknowledged using the normal fault acknowledgement feature of MASTERDRIVES, i.e. via bit 7 of basic unit control word 1 [180.4], e.g. from a digital input, serial interface (if so wired) or the PMU.

Diagnostic parameters

The following display parameters provide you with important diagnostic information:

- n500 : Error number of machine data check [804.07]
- n540.01....40 : Centralized diagnostic parameters of positioning modes [809, 815, 817, 818, 826]
- n540.26 : Current positioning warning
- n541.01...04 : Control and status signals [809, 811]
- n542.01...02 : Status of digital I/Os for positioning
- n668 : Status of cam table [839.3]
- r750 : Receive signals from SIMOLINK [150.5]
- r733 : Receive signals from communication interface, e.g. from PROFIBUS-DP [120.5]

The axis won't start

If your axis won't start, please consult the section entitled "Help, My Axis Won't Start!" in "Commissioning the Technology".

9.10 Hardware and Software Replacement Measures

Hardware replacement measures.

If you replace the hardware – e.g. on repair – technology function F01 must be enabled on the MASTERDRIVES MC unit using the PIN number. Please consult sheet [850] in the function diagram to find out how to check whether the technology option is enabled and, if not, how to enable it.

Before replacing the hardware, copy all the MASTERDRIVES parameters into a download file using DriveMonitor or keep your archived download file at hand. After installing the new hardware, perform a "parameter reset to the factory settings" - with reference to the section of the same name in the "Parameterizing Steps" section of the Compendium. Then download the file with DriveMonitor, in order to restore the original parameter settings.

Please ensure if you use special signal sources that the switches on sensor boards SBx and terminal expansion boards EB1 and EB2 have the same settings as the old hardware.

Software replacement measures (booting new firmware)

Once technology option F01 has been enabled by PIN number [850], it remains enabled even if the software on the unit is replaced/updated. The PIN number is stored in a protected area of the parameter memory. It is therefore not necessary to enable technology option F01 again after replacing the software.

If you obtain new firmware, use DriveMonitor to copy all the MASTERDRIVES parameters into a download file before loading the firmware into the flash EPROM of the MASTERDRIVES unit via the "boot cable". Alternatively, keep your archived download file at hand.

After the booting procedure, perform a "parameter reset to the factory settings" - with reference to the section of the same name in the "Parameterizing Steps" section of the Compendium. Then download the file with DriveMonitor, in order to restore the original parameter settings.

The parameters in new software are normally fully backwardly compatible with all software versions. However, there are incompatibilities in the pilot versions before the release of the first official version of technology option F01 together with basic unit software version V1.2; see the section entitled "Modification History of Technology Option F01".

9.11 Modification History of Technology Option F01

The specified software versions are basic unit software versions. There are no special version numbers for technology option F01. The following section only lists software versions in which changes have been made to technology option F01.

9.11.1 Software Version V1.0

(Start of Shipping: November 97)
Original version, for pilot customers only

9.11.2 Software Version V1.1

(Start of Shipping: February 98)
V1.1 was only supplied to pilot customers.

Modified parameters

- U529.01....02: These parameters have been omitted and no longer need to be set. Basic unit connectors K030 (control word 1), K032 (status word 1) and K250 (fault/warning number) are now connected permanently to the positioning function (see "**Positioning Input Signals**").
- U511...U520: These triple-index parameters are no longer used for **permanent MDI blocks** 1...10. Instead, they are stored in parameters U550...U559.

New parameters

- U550...U559: **Permanent MDI blocks** 1...10

9.11.3 Software Version V1.2

(Start of Shipping: May 18th, 1998)
First officially released software version of technology option F01

Modified binector/connector numbers for position correction

The output binectors/connectors used for synchronization as a free block are now the same as when synchronization is nested as mode 11. It is only necessary to reconfigure the parameters when upgrading from V1.1 to V1.2 if synchronization is nested as a free block (i.e. if U953.33 < 20).

Modification	Reconfiguration Required when Upgrading from V1.1 ==> V1.2 (if Motor Encoder Sensor Board Used in Slot C)
KK310 replaces the old KK801 (corrected path setpoint)	P190 = 310 instead of 801
KK312 replaces the old K802 (slave velocity setpoint)	P209 = 312 instead of 802
K803 is omitted (slave acceleration)	--
KK301 replaces the old KK810 (position correction KOR)	P174 = 301 instead of 810
B307 new binector (enable measured value memory)	--
B304 replaces the old B801 (POV; position correction +)	P175.01 = 304 instead of 801
B303 replaces the old B802 (NOV; position correction -)	P175.02 = 303 instead of 802

Modified normalization in the synchronization function

All path and velocity signals are now fully normalized in the synchronization function, with the virtual master axis and in the positioning function, i.e.:

- The velocity signals are now normalized in [10 LU/min] instead of in [increments/sec].
- The path signals are now normalized in [LU] instead of in [increments].

Modified parameters in the synchronization function

Certain parameters of the synchronization function have been omitted and the corresponding parameters from the machine data (U501) used instead. This eliminates redundancy in the parameters (i.e. the representation of the same variable in two parameters).

The following parameters are affected:

- U501.11 replaces the old U670 (slave axis cycle now MD11)
- U501.23 replaces the old U668.1 (rated velocity now = MD23)

Modified parameters in positioning function

- U502 The machine data transfer now takes place with U502 = 2 instead of U502 = 1

Effect of the new normalization on synchronization parameters

(LU= Length Unit = the length unit based on the actual value weighting factor (AVWF))

- Velocities of virtual master
  1000 [inc/sec] 6000 [10 LU/min]
  => all parameters previously set have to be multiplied by 6; the value output or indicated in the monitoring parameters and connectors is greater by a factor of 6.
  This affects the following parameters and connectors:
  - U682
  - U679/KK818 or the connector connected via U680
  - Monitoring parameters n691 and n692
  - Connector KK816
- Acceleration of virtual master
  1000 [inc/sec^2] 1 [1000 LU/sec^2]
  => the parameter previously set (U685) should be divided by 1000
- Normalization of slave velocity setpoint (speed/velocity precontrol)
  1000 [inc/sec] 60 [1000 LU/min]
  => the parameter previously set should be multiplied by 0.06.

NOTE

Machine data 49 is defined in 1000 LU/min, unlike the velocity setpoints and actual values.

Various enhancements

A series of enhancements has been made that does not affect the compatibility with older software versions:

- The velocity override can now be defined by any connector selected in U709.
- A series of new display parameters has been introduced (e.g. n540, n541, n542).
- The positioning status bits are now connected to individual binectors (B351...B562 [811.3])

9.11.4 Software Version V1.3

(Start of Shipping: December 1998)

Automatic mode [826, 828]

The "Automatic" and "Automatic single-block" positioning modes are now released. Automatic programs are input via the SIMATIC S7 using the GMC-BASIC standard software or via parameters U571 to U591 [828].

Electronic cam [839]

The electronic cam is released. Table input is performed via the SIMATIC S7 using the GMC-BASIC standard software or via parameters U630 to U646 (e.g. from an EXCEL table).

Acceleration pre-control [817]

Output of the acceleration pre-control by "Setpoint output and enable" of the technology option via connector KK313 is now implemented.

New integrator for the virtual master axis using the comfort ramp-function generator

A special integrator for implementing a virtual master axis using the comfort ramp-function generator [790] is now available in the free blocks on function diagram sheet [791].

New connector for position correction [843]

The new connector KK826 has been introduced for position correction. The deviation of the position of the printing or reference index from the setpoint position is available at this connector.

New "on the fly" referencing function for synchronization [843]

The new "on the fly" referencing function enables synchronization to a reference index (BERO or similar) to take place "on the fly" .

It is no longer necessary to approach the reference index in positioning mode beforehand and then to change over to synchronization mode from standstill.

New synchronizing function "Synchronization to master value" [841]

The zero position of the slave axis can be matched to that of the master axis with this function. The speed and acceleration of the compensation movement necessary for this can be set via the new parameters U697.2 and U697.1. Synchronization is started by the binector that can be selected via the new parameter U676.

Introduction of 3 alternatives of setting the displacement angle for synchronization [841]

An angle displacement for synchronization can now be conveniently set in the following 3 ways:

- Setting an **absolute displacement angle** via the connector selectable by the new parameter U678.01
- Setting a **relative displacement angle** via connectors or parameters, which can be supplemented either in a positive or a negative direction, depending on the current zero position
- Setting a **displacement angle in inching mode** with a selectable variable speed (similar to a motorized potentiometer)

These displacement angle settings can be made in any size. Overflows of more than one slave axis revolution can be coped with. The displacement angle setting can be used, for example, to set up an index control system for printing machines.

Catch-up [837]

The newly introduced catch-up function enables a drive to be uncoupled from an angular-locked synchronizing multi-motor system (e.g. shaftless printing press) and to be operated autonomously at its own speed setpoint ("isolated setpoint"). It also enables a drive to halt at a specified angular position.

The drive can catch up to the speed of the running machine from the halt position or from its current speed in autonomous operation. After the catch-up command has been set, the drive accelerates to the machine speed and can then be coupled back accurately into angular synchronization after reaching speed synchronization.

NOTE

The "Catchup" function is not released until SW version V1.32.

Modified parameters

- U501.23 Machine data MD23 "Maximum traversing speed": Can now be set up to 20 000 000 instead of up to 1 000 0900 [x100 LU/min]
- U501.10 Machine data MD10 "Offset for absolute-value encoder": Now remains in non-volatile storage also after electronics power supply has been de-energized/energized.

New parameters

- U422.01-03 Input position actual value, actual speed and position setting value for the real master
- U423 Input smoothing for position actual value input of the real master
- U424 Deadtime compensation for real master
- U425.01-02 Axis cycle length at the input and output of the real master
- U426 Selection of connector "Set output" for real master
- U427 Smoothing of the speed signal for the real master
- U428 Speed normalization in the real master
- U625.01-03 Catch-up control word
- U626.01-03 Catch-up setpoints (setpoint speed and halt position)
- U627.01-02 Rounding time constants for the halt and catch-up ramp in the catch-up function
- U628.01-02 Deceleration/acceleration for the halt and catch-up ramp in the catch-up function
- U672 Selection of the "Set displacement" binector in the displacement angle setting
- U675.01-02 Selection of the "Enable position correction" and "Enable referencing" binectors for synchronization (parameter now indexed, index .02 is new)
- U676 Selection of the "Synchronize to master value" binector
- U677.01-02 Fixed setpoints for absolute and relative displacement angle
- U678.01-03 Selection of the following connectors for displacement angle setting: "Absolute displacement angle", "Displacement setting value" and "Relative displacement angle".
- U688.01-02 Fixed setpoints for catch-up speed and catch-up position
- U694.01-02 Selection of "Start+" and "Start-" binectors for relative displacement angle setting
- U695.01-03 Speed, deceleration and acceleration for "Displacement angle inching"
- U696.01-02 Selection of "Inching+" and "Inching-" binectors for displacement angle setting
- U697.01-02 Acceleration and variable speed for compensation movement of displacement angle setting
- U698.01-02 Selection of connectors for variable speeds for displacement angle setting
- U699.01-02 Operating mode of synchronization to master value and absolute displacement angle setting

9.11.5 Software Status V1.4

(Start of delivery: 12.99)

General synchronism

Concerning the **Synchronism** function, please note that the smallest permissible time slot is T4 (**P2953.33 = 4**).

Real master [833]

The "Real Master" function block is no longer part of Technology Option F01, but is a free block.

Set the setting value. This is only effective for the output. Additional connector KK624 as speed output in %.

Electronic cam [839]

The electronic cam has been extended from 2 to 8 tables and from 200 to 400 support points.

The assignments X101-X150 = U640; Y101-Y150 = U645; X151-X200 = U641; Y151-Y200 = U646; X201-X250 = U632; Y201-Y250 = U637; X251-X300 = U633; Y251-Y300 = U638.

Amendment to the configuration table (U615):
0 = 1 table with 400 support points; 1 = 2 table with 200 support points each;
2 =4 tables each with 100 support points; 3 = 8 tables each with 50 support points;
4 = max. 8 tables with a total of 400 support points.

New status binector: Stop at table end B834

Additive offset

Supplementary in the case of synchronism: external position setpoint setting possibility (U460 and U461])

To be used herewith:

New free blocks [794]

Free block 'Additive offset adjustment analogous to offset angle adjustment in synchronism, only external
'Offset adder with limitation' for modulo calculation of position setpoints.

Speed input [834]

Supplementary in the case of synchronism: Speed input in percent [%] (U600. 4 to 6), analog switchable with the position sources from the master setpoint source.

Visualization parameters

Supplementary in the case of synchronism: Visualization parameters n655 for position setpoint [LU], n653 for speed [%], n654 for gear factor, n466 for offset angle

Position correction [843]

Supplementary in the case of synchronism position correction: Parameter U467 for input of the setting speed in [1000LU/Min]

Start/Stop [834]

Supplementary in the case of synchronism: Status binectors start/stop (B831, B832; B833)

Synchronism mode 3 [834]	Supplementary in the case of synchronism: Mode as catch-up. Only to be used if the scaling speed master has been entered.
Master setpoint correction [845]	Technology option master setpoint correction: Function selection (U458) between master setpoint correction and master setpoint setting. Output (integrator) setting introduced. Connector output KK828 residual offset distance introduced.
Catch-up [837]	Supplementary in the case of catch-up: Deceleration delay/acceleration delay for positioning (U628.3 & 4); binector "Trigger transfer stop position" (U625.4); rounding mode introduced (U649)
Synchronism status signals [846]	Output of a synchronism status word in n450.1 (low word) and n450.2 (high word)
Homing procedure [821]	Homing procedure supplements: 1. Homing with homing switch only 2. Homing with encoder zero mark only 3. Use of a reversing switch with homing
Procedure: Referencing on the fly [822]	Homing on the fly: The assignment of the input for reference setting on the fly is by means of machine datum MD46 with identification, and is dynamically released via binector input U675.2. Behaves analogously to referencing in synchronous operation
Actual value dependent M output	Extensions of actual value dependent M (machine) output in the case of rotary axes: evaluation whether the residual travel distance to a given position is less than one revolution, and M output must be implemented.

NOTE

The additive offset angle setting and actual value dependent M (machine) output functions have not yet been released at software status V1.4.0. They shall be released with version V1.42.

Changed parameters

- U501.08 — MD8 :
  0 = Homing with bero and zero mark
  1 = Homing with bero only
  2 = Homing with zero mark only
- U501.45 — MD45: Digital inputs - Function 1
  0 = Without function
  1 = Start OR-gated
  2 = Start AND-gated
  3 = Position-feedback setting on the fly
  4 = External set change
  5 = Measuring on the fly
  6 = Collision
  7 = Bero for homing
  8 = Reversing cam for homing
  9 = Release read-in, dependent on external program
- U627.3,.4 — Parameter Index 3 and 4 do not apply (not used)
- U628.3,.4 — Parameter Index 3 and 4 extended Acceleration/deceleration for positioning
- n655.1...5 — Position display parameter [LU] for synchronism extended
- n653.1..5 — Speed display parameter [%] for synchronism extended
- n668.1...8 — Status of tables extended to Tables 1-8
- U602 — Synchronism mode extended from 0..2 to 0..3 (catch-up)
- U615 — Table configuration extended from 1,2 to 0...4 for 8 tables
- U650.1..3 — Binector for table selection extended for 8 tables.

New parameters

♦ U449	Rounding mode, catch-up
♦ n459.1,2	Display parameters, tables of X/Y axis positions
♦ U600.4-6	Master speed setpoint, master axis [%]
♦ U461.1-2	Source, additive offset, slave
♦ U607.2	Scaling speed, master
♦ U607.2	Scaling speed, slave (alternative to MD23, here with two places after the decimal)
♦ n654.1...2	Display of set gear factor (numerator/denominator)
♦ n634	Display of free support points for the table, in variable table configuration mode (U615=4)
♦ n639.1...16	Table information: Display parameters giving information as to which tables are to be found in which parameters. Beginning of table, end of table.
♦ n466.1...2	Visualization parameters for offset angle adjustment and synchronization. Residual offset: Index 1 Current offset: Index 2
♦ U467	Maximum correction speed in 1000LU/min, alternative to U667 maximum correction speed in LU/sampling time.

9.12 References, Software Products and Accessories

/1/ "Motion Control for MASTERDRIVES MC and SIMATIC M7" manual including SIMATIC S7 "Motion Control Configuring Package" software on CD-ROM

- Order number German 6AT1880-0AA00-1AE0
- Order number English 6AT1880-0AA00-1BE0
- Internal Siemens order location: LZF Logistics Center Fürth

The configuring package also includes the GMC-BASIC standard software.

/2/ Motion Control HMI Package for SIMATIC S7

- Order number: 6AT1880-0AA10-1YA0

The HMI package also contains the GMC-OP-OAM standard software.

/3/

"DVA_S5" Option Package for SIMATIC S5		
Order number: 6DD1800-0SW0 Internal Siemens ordering location: A&D SE B1 TDL11 (Order form recipient G610B "WKF Fürth")	German / English	♦ Communication software "PROFIBUS-DP" for • S5-95U / DP Master • S5-115 ... 155U with IM308-B/C ♦ Communication software "USS protocol" for • S5-95 / 100U with CP521Si • S5-115 ... 155U with CP524 (3.5" diskette for S5-DOS including German/English User Manual)

/4/

Drive ES SIMATIC Software Package			
Ordering data			
Drive ES SIMATIC V5.1 Single license	6SW1700-5JC00-1AA0	CD-ROM, 1	Five standard languages
Drive ES SIMATIC V5.1 Copy license / Runtime license	6SW1700-5JC00-1AC0	Product certificate only (without SW and DOCU)	Five standard languages
Content of Drive ES SIMATIC package			

- **"PROFIBUS-DP" communication software for**
  S7-300 with CPUs with integrated DP interface (program libraries DRVDPS7, POSMO)
  S7-400 with CPUs with integrated DP interface or with CP443-5 (program library DRVDPS7, POSMO)
  S7-300 with CP342-5 (program library DRVDPS7C)
- **"USS Protocol" communication software for**
  S7-200 with CPU214 / CPU215 / CPU 216 (driver program DRVUSS2 for STEP7 Micro programming tool)
  S7-300 with CP340/341 and S7-400 with CP441 (program library DRVUSSS7)
- **STEP7 Slave Object Manager**
  for convenient configuring of drives and non-cyclic PROFIBUS-DP communication with drives, support for conversion of DVA_S7 to Drive ES projects (V5.1 and later only)
- **SETUP program**
  for installing software in the STEP7 environment

/5/ 1 axis demonstration pack, order no. 6SX7000-0AF00 contents:

- 1FK6 synchronous motor with resolver
- 1 MASTERDRIVES MC Compact PLUS converter
- Brake resistor, RI suppression filter
- Operator panel
- Ready to connect the AC cable

Internal Siemens ordering location: A&D SE B8.4
("WKF Fürth", Tel. 4894)

/6/ 2-axis demonstration pack, order no. 6SX7000-0AF10 contents:

- 1FT6 synchronous motor with optical sin/cos encoder
- 1FK6 synchronous motor with resolver
- One toothed disc with position index per motor
- LED beam for checking the synchronization
- MASTERDRIVES MC Compact PLUS converters and inverters
- Brake resistor, RI suppression filter
- Operator panel
- Ready to connect the AC cable

Ordering location: same as 1-axis demonstration pack

10 Process Data

10.1 Description of the control word bits

The operating statuses can be read in visualization parameter r001: e.g. READY TO POWER-UP: r001 = 009

The function sequences are described in the sequence in which they are actually realized.

An overview of the control word can be found in function diagrams 180 and 190.

Bit 0: ON/OFF 1 command (↑ "ON") / (L "OFF1")

Condition Positive edge change from L to H (L → H) in the READY TO POWER-UP condition (009).

Result

- PRECHARGING (010)
  The main contactor (option), if present, is closed.
  Precharging is carried out. After precharging, the bypass contactor, if present, is closed.
- READY (011)
  If the drive was last powered-down with "OFF2", the next condition is only selected after the de-energization time (P603) has expired since the last shutdown.
- RUN (014).

Condition LOW signal

Result

- OFF1 (015), if the drive is in a status where the inverter is enabled.
  - For P290 = 0 and slave drive, the system waits until the higher-level open-loop/closed-loop control shuts down the drive.
  - For P290 = 0 and master drive as well as for P290 = 1 (v/f characteristic), the setpoint at the ramp-function generator input is inhibited (setpoint = 0), so that the drive decelerates along the parameterized down ramp (P464) to the OFF shutdown frequency (P800).

  After the OFF delay time (P801) has expired, the inverter pulses are inhibited, and the main contactor (option/bypass contactor), if available, are opened.
  If the OFF1 command is withdrawn again when the drive is ramping-down, (e.g. as the result of an ON command), ramp-down is interrupted, and the drive goes back into the RUN (014) condition.
- For PRECHARGING (010), READY (011), RESTART-ON-THE-FLY (013) [1] or MOT-ID-STANDSTILL (018) [2], the inverter pulses are inhibited, and the main contactor (option)/bypass contactor, if available, is opened.
- POWER-UP INHIBIT (008)
- READY-TO-POWER-UP (009), if "OFF2" or "OFF3" are not present.

[1] The "Restart-on-the-fly" function" has not been provided.
[2] The "Motor ID" function has not been provided.

Bit 1: OFF2 command (L "OFF2") electrical

Condition LOW signal

Result
- The inverter pulses are inhibited, and the main contactor (option)/bypass contactor, if available, are opened.
- POWER-ON INHIBIT (008), until the command is removed.

NOTE The **OFF2** command is simultaneously connected from three sources (P555, P556 and P557)!

Bit 2: OFF3 command (L "OFF3") (fast stop)

Condition LOW signal

Result
- This command has the following results:
  - When P290 = 0 (closed-loop current control), the drive is braked at the current limit by means of torque control (see function diagram 370). The sign before the braking torque is always opposite to that of the speed actual value. If the speed actual value reaches the OFF value P800 (see function diagram 480), the gating pulse is disabled. If OFF3 is used, the OFF time must be set to P801 = 0.0.
    If brake control is used, P801 must be > P617 + P607. Brake control (function diagram 470) should not be used together with AUS3. With brake control the inverter must not be disabled until the brake is fully applied (i.e. after brake closure time P607 has exceeded and, if necessary, delay brake threshold P617 $\Rightarrow$ P891 > 0). During this time, the drive would necessarily hum on AUS3 because every sign inversion of the speed actual value (noise to n_{act}, average value of n_{act} = 0 if brake is applied) would also reverse the torque direction. The brake control should be used with the AUS1 command.
    In the case of drives with a low moment of inertia in comparison to the motor moment of inertia, it may be necessary to increase the OFF value P800 by up to 1 to 5 %. If this is not sufficient in order to avoid fluctuation of the torque-forming current setpoint when n $\approx$ 0, a speed-controlled shutdown with OFF1 must be carried out. The torque limits (K0172, K0173) have no effect during OFF3. The torque can only be limited by means of P128 (maximum current).
    When P290 = 1 (v/f characteristic), the setpoint at the ramp-function-generator input is blocked so that the drive is powered down on the parameterized deceleration ramp (P464) to the OFF frequency (800).
    After the OFF waiting time (P801) has expired, the inverter pulses are inhibited and the main/bypass contactor, if present, is opened. If the OFF3 command is withdrawn during deceleration, deceleration is nevertheless continued.

- For PRE-CHARGING (010), READY (011), RESTART-ON-THE-FLY (013) [1] or MOT-ID STANDSTILL (018), the inverter pulses are inhibited, and the main/bypass contactor, if used, is opened.
- If the drive operates as slave drive, when an OFF3 command is issued, it automatically switches-over to the master drive.
- POWER-ON inhibit (008), until the command is withdrawn.

NOTE

The **OFF3** command is simultaneously effective from three sources (P558, P559 and P560)!

Priority of the **OFF** commands: **OFF2** > **OFF3** > **OFF1**

Bit 3: Inverter enable command (H "inverter enable")/(L "inverter inhibit")

Condition HIGH signal, READY (011) and the de-energization time (P603) has expired since the last time that the drive was shutdown.

Result
- RUN (014)
  The inverter pulses are enabled and the setpoint is approached via the ramp-function generator.

Condition LOW signal

Result
- For RESTART-ON-THE-FLY (013) [1], RUN (014):
  The drive changes over into the READY (011), condition, and the inverter pulses are inhibited.
- If OFF1 is active (015), the inverter pulses are inhibited, the main/bypass contactor, if used, is opened, and the drive goes into the POWER-ON INHIBIT (008) condition.
- If OFF3 is active (016 / fast stop), the inverter inhibit command is ignored, fast stop is continued and, after shutdown (P800, P801), the inverter pulses are inhibited.

Bit 4: Ramp-function generator inhibit command (L "RFG inhibit")

Condition LOW signal in the RUN (014) condition.

Result
- The ramp-function generator output is set to setpoint = 0.

Bit 5: Ramp-function generator hold command (L "RFG hold")

Condition LOW signal in the RUN (014) condition.

Result
- The actual setpoint is "frozen at the ramp-function generator output".

Bit 6: Setpoint enable command (H "setpoint enable")

Condition HIGH signal and the de-energization time have expired (P602).

Result
- The setpoint at the ramp-function generator input is enabled.

[1] The "Restart-on-the-fly" function has not been provided.

Bit 7: Acknowledge command (↑ "Acknowledge")

Condition	Rising (positive) edge change from L to H (L → H) in the FAULT condition (007).
Result	♦ All of the current faults are deleted after they have been previously transferred into the diagnostics memory. ♦ POWER-ON INHIBIT (008), if no actual faults are present. ♦ FAULT (007), if there are additional faults which cannot be acknowledged.
NOTE	The **Acknowledge** command is simultaneously effective from the three sources (P565, P566 and P567) and always from the PMU!

Bit 8: Inch 1.3 Bit 0, ON command (↑ "Inch 1.3 ON") / (L "Inch 1.3 OFF")

Condition	Positive (rising) edge change from L to H (L → H) in the READY TO POWER-UP (009) condition.
Result	♦ In the setpoint channel, an ON command (see control-word bit 0) is automatically executed and, with Bit 9 = 0, inching frequency 1 (P448) is enabled or, when bit 8 and bit 9 are activated at the same time, inching frequency 3 (P450) is enabled. **The ON/OFF1 command (bit 0) is ignored for active inching operation**! The system must wait until the de-energization time (P603) has expired. (See also function diagram 310)
Condition	LOW signal
Result	♦ An OFF1 command is automatically executed (refer to control word bit 0).

Bit 9: Inch 2.3 Bit 1, ON command (↑ "Inch 2.3 ON") / (L "Inch 2.3 OFF")

Condition	Rising (positive) edge change from L to H (L → H) in the READY TO POWER-UP (009) condition.
Result	♦ In the setpoint channel, an ON command (see control-word bit 0) is automatically executed and, with Bit 8 = 0, inching frequency 2 (P449) is enabled or, when bit 8 and bit 9 are activated at the same time, inching frequency 3 (P450) is enabled. **The ON/OFF1 command (bit 0) is ignored if inching is active**. The system must wait until the de-energization time (P603) has expired. (See also function diagram 310)
Condition	LOW signal
Result	♦ An OFF1 command is automatically executed (refer to control word bit 0).

Refer to the function diagram "Setpoint processing (Part 1)" (310)

Bit 10: Control from the PLC command (H "control from the PLC")

Condition HIGH signal; the process data PZD (control word, setpoints) are only evaluated if the command has been accepted; this data is sent via the SST1/2 interface of the CUMC, the CB/TB interface (option) and the SCB2 interface (option). In the case of Compact Plus, the SST1/2 interface is on the basic board; the TB and SCB2 interfaces do not exist.

Result
- If several interfaces are used, only the process data of the interfaces are evaluated, which send an H signal.
- For an L signal, the last values are received in the appropriate dual port RAM of the interface.

NOTE An H signal appears in the visualization parameter r550 "control word 1", if **one** of the interfaces sends an H signal!

Bit 11: Clockwise rotating field command (H "clockwise rotating field")

Condition HIGH signal

Result
- The setpoint is influenced in conjunction with bit 12 "counter-clockwise rotating field".

Refer to the function diagram "Setpoint processing (Part 1)" (310)

Bit 12: Counter-clockwise rotating field command (H "counter-clockwise rotating field")

Condition HIGH signal

Result
- The setpoint is influenced in conjunction with bit 11 "clockwise-rotating field".

Refer to the function diagram "Setpoint processing (Part 1)" (310)

NOTE The **counter-clockwise rotating field** and the **clockwise rotating field** command have no influence on supplementary setpoint 2, which is added after the ramp-function generator (RFG)!

Bit 13: Command to raise the motorized potentiometer (H "raise motorized potentiometer")

Condition HIGH signal

Result
- The motorized potentiometer in the setpoint channel is driven in conjunction with bit 14 "motorized potentiometer, lower".

Refer to the function diagram "Motorized potentiometer" (300)

Bit 14: Command to lower the motorized potentiometer (H "lower motorized potentiometer")

Condition HIGH signal

Result
- The motorized potentiometer in the setpoint channel is driven in conjunction with bit 13 "raisemotorized potentiometer".

Refer to the function diagram "Motorized potentiometer" (300)

Bit 15: Command external fault 1 (L "External fault 1")

Condition LOW signal

Result

- FAULT (007) and fault message (F035).
  The inverter pulses are inhibited, the main contactor/bypass contactor, if used, is opened**.**

Refer to the section "Fault- and alarm messages"

Bit 16: Function data set FDS bit 0 command

Result

- In conjunction with bit 17 "FDS BIT 1" one of the four possible function data sets is energized.

Bit 17: Function data set FDS bit 1 command

Result

- In conjunction with bit 16 "FDS BIT 0" one of the four possible function data sets is energized.

Bit 18, 19: Reserve

Bit 20: Fixed setpoint FSW bit 0 command

Result

- In conjunction with bit 21 "FSW BIT 1", one of the four possible fixed setpoints is energized to input as percentage fixed setpoints, referred to the reference frequency P352 or reference speed P353.

Refer to the function diagram "Fixed setpoints" (290), also refer to FSW bit 2 and bit 3, parameter P417, P418

Bit 21: Fixed setpoint FSW bit 1 command

Result

- In conjunction with bit 20 "FSW BIT 0" one of the four possible fixed setpoints is energized for input as percentage fixed setpoints, referred to the reference frequency P352 or the reference speed P353.

Refer to the function diagram "Fixed setpoints" (290), also refer to FSW bit 2 and bit 3, parameters P417, P418

Bit 22: Reserve

Bit 23: Reserve

Bit 24: Enable-droop command (H "Droop enable")

Condition HIGH signal

Result

- This command enables the droop function if P290 = 0 has been assigned, parameter P246 is <> 0 and the inverter pulses of the converter have been enabled.
  The speed-controller output negatively linked back to the speed setpoint can be set via parameters P245 (droop) and P246 (droop gain).

Refer to function diagram "Speed controller" 360

Bit 25: Controller enable command (H "controller enable")

Condition HIGH signal and the drive converter inverter pulses are enabled.

Result

- The output of the speed controller is enabled when P290 = 0 (current control).

Refer to function diagram 360

Bit 26: Command, external fault 2 (L "External fault 2")

Condition LOW signal; it is only activated from the READY (011) condition onwards and after an additional time delay of 200 ms.

Result

- FAULT (007) and fault message (F036).
  The inverter pulses are inhibited, the main contactor, if available, is opened.

Bit 27: Slave/master drive command (H "Slave drive")/(L "Master drive")

Condition HIGH signal, P290 = 0 and enabling of the inverter pulses of the converter.

Result

- Slave drive: The closed-loop control acts as closed-loop torque control (M closed-loop control).

Condition LOW signal, P290 = 0 and enabling of the inverter pulses of the converter.

Result

- Master drive: The closed-loop control function acts as a closed-loop speed control function (n-control).

Refer to the function diagrams 360, 370

Bit 28: Command, external alarm 1 (L "External alarm 1")

Condition	LOW signal
Result	♦ The operating status is maintained. An alarm message is issued (A015).

Bit 29: Command, external alarm 2 (L "External alarm 2")

Condition	LOW signal
Result	♦ The operating status is maintained. An alarm message is issued (A016).

Bit 30: Select, BICO data sets (H "data set 2") / (L "data set 1")

Condition	HIGH signal
Result	♦ The parameter settings of data set 2 for all binector and connector commands and signals, are activated.
Condition	LOW signal
Result	♦ The parameter settings of data set 1 for all binector and connector commands and signals, are activated.

Bit 31: Main contactor checkback signal command (H "main contactor checkback signal")

Condition	HIGH signal, corresponding to the wiring and parameterization of the main contactor (option).
Result	♦ Checkback signal, "main contactor energized" (closed).

10.2 Description of the status word bits

An overview of the status word can be found in function diagrams 200 and 210.

Bit 0: Message, "Ready to power-up" (H)

HIGH signal POWER-ON INHIBIT (008) or READY TO POWER-UP (009) status

Significance

- The power supply, the open- and closed-loop control are operational.
- The inverter pulses are inhibited.
- If an external power supply and a main contactor (option)/bypass contactor exist, it is possible that the DC link is still dead in this converter status!

Bit 1: Message, "Ready" (H)

HIGH signal PRE-CHARGING (010) or READY (011) status

Significance

- The power supply, the open-loop and the closed-loop control are operational.
- The unit is powered-up.
- Pre-charging has been completed.
- The DC link has reached the rated voltage.
- The inverter pulses are still inhibited.

Bit 2: Message, "Run" (H)

HIGH signal RESTART-ON-THE-FLY (013) [1], RUN (014), OFF1 (015) or OFF3 (016)

Significance

- The unit is functioning.
- The inverter pulses are enabled.
- The output terminals are live.

Bit 3: Message "Fault" (H)

HIGH signal Fault (007) status

Significance

- A fault has occurred.

Output at the terminal strip with L signal.

[1] The "Restart-on-the-fly" function has not been provided.

Bit 4: Message "OFF2" (L)

LOW signal OFF2 command available

Significance
- The OFF2 command was output (control word bit 1).

Bit 5: Message "OFF3" (L)

LOW signal OFF3 (016) status, and/or OFF3 command available

Significance
- The OFF3 command was output (control word bit 2).

Bit 6: Message "Power-on inhibit" (H)

HIGH signal POWER-ON INHIBIT (008) status

Significance
- The power supply, open-loop and closed-loop control are operational.
- If an external power supply and a main contactor (option)/bypass contactor are available, it is possible to bring the DC link voltage in this drive converter status into a no-voltage condition!
- The message is available as long as an OFF2 command is present via control word bit 1 or an OFF3 command is available via control word bit 2 after the setpoint has been ramped-down, or an ON command is available via control word bit 0 (edge evaluation).

Output at the terminal strip with L signal.

Bit 7: Message, "Alarm" (H)

HIGH signal Alarm (Axxx)

Significance
- An alarm has been issued.
- The signal is present until the cause has been resolved.

Output at the terminal strip with L signal.

Bit 8: Message "Setpoint/actual-value deviation" (L)

LOW signal Alarm, "Setpoint-actual value deviation" (A034)

Significance
- A deviation of the actual value compared to the comparison setpoint has occurred which is larger than P792 (set/act dev) and lasts longer than P794 (set/act dev. time). (See also function diagram 480)
- The bit is again set as H signal, if the deviation is less than parameter value P792.

Bit 9: Message "PZD control requested" (H)

HIGH signal Still present.

Bit 10: Message "Comparison value reached" (H)

HIGH signal The parameterized comparison value has been reached.

Significance
- The actual value is greater or equal to the parameterized comparison value (P796).
- The bit is re-set to the L signal as soon as the actual value falls below the comparison value (P796) minus the parameterized comparison-value hysteresis (P797 in % in relation to the comparison value (P796)).
  (See also function diagram 480).

Bit 11: Message "Fault, undervoltage" (H)

HIGH signal "Undervoltage in the DC link" fault (F008)

Significance
- The DC link voltage has fallen below the permissible limit value.

Refer to the Section "Fault- and alarm messages"

Output at the terminal strip with L signal.

Bit 12: Message "Main contactor energized" (H)

HIGH signal The main contactor/bypass contactor (option) is energized.

Significance
- The main contactor/bypass contactor (option) can be driven with the appropriate wiring and parameterization.

Bit 13: Message "RFG active" (H)

HIGH signal Ramp-function generator active

Significance
- The ramp-function generator output (KK0073) is not equal to the ramp-function generator input (KK0072).

Bit 14: Message, "Clockwise rotating field" (H)/"Counter-clockwise rotating field" (L)

HIGH signal Clockwise rotating field

Significance
- The speed setpoint for closed-loop control (speed setpoint r472 / KK0075) is greater or equal to 0.

LOW signal Counter-clockwise rotating field

Significance
- The speed setpoint for closed-loop control (speed setpoint, r472 / KK0075) is smaller than 0.

Bit 15: Reserve

Bit 16: Message "Restart-on-the-fly active" (H) [1]

HIGH signal The restart-on-the-fly function is active, or the de-energization time (P602) is running.

Significance
- The excitation time (magnetization time) is active.

Bit 17: Reserve

Bit 18: Message "Overspeed" (L)

LOW signal Alarm "Overspeed" (A033)

Significance
- The speed actual value is either greater than the maximum speed for the clockwise-rotating field (P452) or is smaller than the maximum speed for the counter-clockwise rotating field (P453).
- The bit is set to the H signal again as soon as the speed actual value is smaller than or equal to the corresponding maximum speed. (See also function diagram 480).

Bit 19: Message "External fault 1" (H)

HIGH signal "External fault 1"

Significance
- A "External fault 1" is present in control word, bit 15.

Output at the terminal strip with L signal.

Bit 20: Message "External fault 2" (H)

HIGH signal "External fault 2"

Significance
- A "External fault 2" is present in control word bit 26.

Output at the terminal strip with L signal.

Bit 21: Message "External alarm" (H)

HIGH signal "External alarm"

Significance
- An "external alarm 1" is present in control word bit 28, or, "external alarm 2" in control word bit 29.

Output at the terminal strip with L signal.

[1] The "Restart-on-the-fly" function has not been provided.

Bit 22: Message "Alarm i^2t drive converter" (H)

HIGH signal Alarm "i^2t alarm, inverter" (A025)

Significance

- If the instantaneous load status is maintained, then the drive converter will be thermally overloaded.
  (See also function diagram 480)

Output at the terminal strip with L signal.

Bit 23: Message "Fault, converter overtemperature" (H)

HIGH signal "Inverter temperature too high" fault (F023)

Significance

- The limiting inverter temperature has been exceeded.

Output at the terminal strip with L signal.

Bit 24: Message "Alarm, converter overtemperature" (H)

HIGH signal Alarm, "inverter temperature too high" (A022)

Significance

- The inverter temperature threshold to release an alarm has been exceeded.

Output at the terminal strip with L signal.

Bit 25: Message "Alarm, motor overtemperature" (H)

HIGH signal Alarm "Motor overtemperature"

Significance

- This is an overtemperature alarm triggered by the KTY (P380 > 0).
- The precondition for the alarm is satisfied by a measurement with the KTY84 sensor (r009 / K0245).
- Parameters involved in the calculation:
  P380 (mot. temp. alarm).

Output at the terminal strip with L signal.

Bit 26: Message "Fault, motor overtemperature" (H)

HIGH signal Fault, "Motor overtemperature"

Significance

- This is an overtemperature fault detected by the KTY (P381 > 1).

Output at the terminal strip with L signal.

Bit 27: Reserve

Bit 28: Message, "Fault, motor stalled/locked"" (H)

HIGH signal Fault, "Motor stalled or blocked" (F015)

Significance
- The drive has either stalled or is locked.

Output at the terminal strip with L signal.

Bit 29: Message "Bypass contactor energized" (H)

HIGH signal The bypass contactor is energized.

Significance
- With appropriate wiring and parameterization, an external bypass contactor (option) can be energized (only for DC devices).

Bit 30: Reserve

Bit 31: Message "Pre-charging active" (H)

HIGH signal PRE-CHARGING (010) condition

Significance
- Pre-charging is realized after an ON command.

11 Engineering Information

General

Servo drives are mostly cycle-type drives, i.e. drives which perform particular sequences of movement within a fixed cycle of motion. These movements can be linear or rotational. In addition, the motion sequence usually involves approaching a pre-defined position and all movements must be carried out in the shortest time possible. As a consequence, drives have to meet specific requirements. They must be

- dynamic, i.e. move to the desired position in an optimum time and without overshoot
- overload-capable, i.e. have a high acceleration reserve
- and must have a large control range, i.e. high resolution for exact positioning.

The planning notes below refer to servo drives with 1FK6/1FT6 synchronous servomotors or with 1PA6 induction servomotors. The type of motor which is selected, either synchronous or induction, depends on the requirements of the drive and on the required drive power. Synchronous servomotors are preferred where a small unit volume, low rotor inertia, high overload capability and thus fast response levels are important. Induction servomotors are of simpler design and are therefore very sturdy. They only require a pulse encoder instead of an encoder or a resolver. Induction servomotors are offered with ratings up to 160 kW.

Which components are selected from the Motion Control system depends on the type of drive configuration used. The drives can be operated individually, for example, as single-axis drives or together as multi-axis drives. For connecting the drives to a PLC, via PROFIBUS for example, supplementary boards may be necessary. Decentralized provision of technology functions within the Motion Control system is possible with special software or the functions can be provided centrally by means of a PLC. Drives can be coupled, e.g. for angular synchronism, via SIMOLINK.

A typical planning sequence

The planning of a cycle-type drive, i.e. the selection of the motor, converter/inverter and perhaps the rectifier unit, is carried out in the following sequence:

1. Clarification of the type of drive, technical data and other border conditions
2. Specification of the travel curve
3. Calculation of the maximum speed under load and the maximum load torque, selection of the gear
4. Selection of the motor
5. Selection of the converter or inverter
6. Selection of the rectifier unit if multi-axis drives are used
7. Selection of the braking unit and the braking resistor
8. Selection of other components.

NOTE

Steps 2 to 8 of the above sequence can be conveniently carried out with the aid of the "PFAD" planning program. In particular, this method simplifies the optimization of the drive, which would otherwise entail a great amount of calculation work.

11.1 Clarification of the type of drive, technical data and other border conditions

The procedure for calculating the load torque depends on the type of drive. It may be a travel drive, a lifting drive, a turntable drive or a spindle drive. In the case of linear motion, for example, power can be transmitted via a toothed belt, a gear rack, a spindle or via friction. Normally, a further set of gears is also needed for adapting the motor speed and the motor torque to the load conditions.

For this calculation, the necessary technical data must be available, such as the moving masses, diameter of the drive wheel/pinion or the diameter and pitch of the spindle, details of the frictional resistance, mechanical efficiency, maximum speed, maximum acceleration and maximum deceleration, travel distances and times and the accuracy levels for positioning. If the drive consists of several motors with the same load distribution which are each operated as individual drives on a converter/inverter, the conditions for one motor have to be taken into consideration in each case when dimensioning the drive (moving masses, load-side moments of inertia, additional forces/torques divided by the number of motors).

11.2 Specification of the travel curve

The travel curve - namely the *v,t* diagram when a linear drive is being used - is determined from the information relating to travel distances, maximum speed, acceleration, deceleration and the cycle time. If multi-axis drives are used, the interdependence of the individual travel curves must be taken into account. The travel curve is needed for deciding on the thermal rating of the motor and the type of braking resistors. It should therefore represent a "worst-case scenario" for the particular type of motor and resistors chosen.

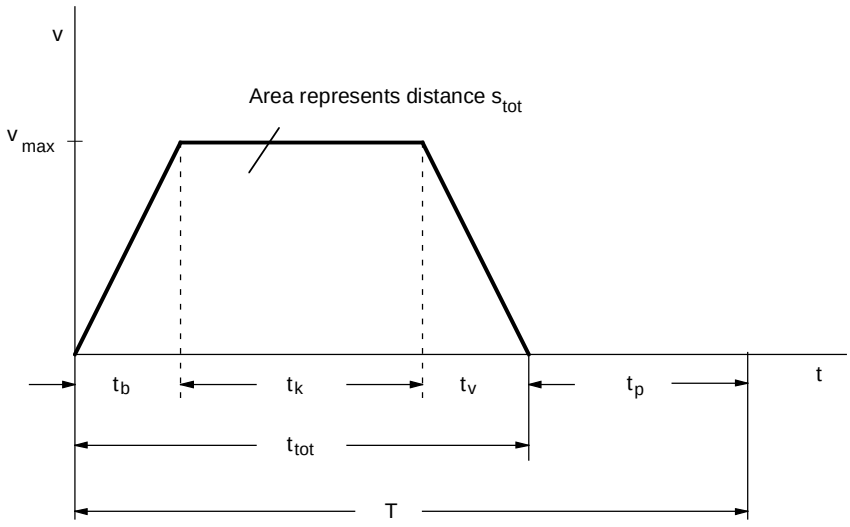

Fig. 11-1 Example of a simple travel curve

- Acceleration (b) time [s] $t_b = \frac{v_{max}}{a_b}$
- Deceleration (v) time [s] $t_v = \frac{v_{max}}{a_v}$

v_{max} Maximum speed [m/s]
$a_{b,v}$ Acceleration, deceleration [m/s^2]

- Time for constant (k) travel [s] $t_k = \frac{s_{tot} - v_{max} \cdot \frac{t_b}{2} - v_{max} \cdot \frac{t_v}{2}}{v_{max}}$

s_{tot} Travel distance [m]

- Travel time [s] $t_{tot} = t_b + t_k + t_v$

NOTE

On rotating drives (turning mechanisms), the values ω_{max}, $\alpha_{b,v}$, φ_{tot} have to be applied instead of v_{max} , $a_{b,v}$, s_{tot}.

11.3 Calculation of the maximum speed under load and the maximum load torque, selection of the gear

Information on the mechanical factors involved is used to calculate the maximum speed under load and the maximum load torque. The following specifies the calculation formulae for simple drive tasks:

Horizontal travel drive

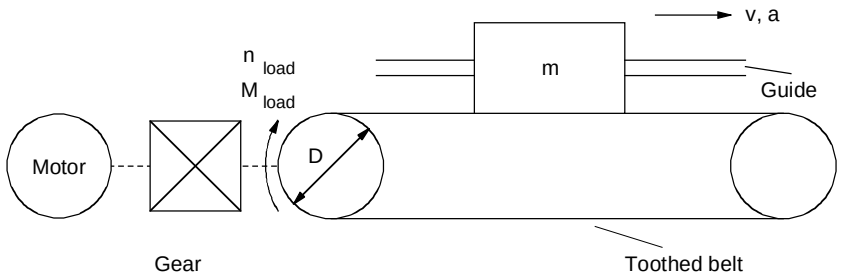

Fig. 11-2 Horizontal travel drive

- Speed under load [rpm]

$$n_{load} = \frac{v \cdot 60}{p \cdot D}$$

v	Travel speed	[m/s]
D	Diameter of load wheel/pinion	[m]

- Travel resistance / frictional force [N]

$$F_W = m \cdot g \cdot w_F$$

w_F specific travel resistance

- Resistance/frictional torque [Nm]

$$M_W = F_W \cdot \frac{D}{2}$$

- Angular acceleration and deceleration at the load wheel/pinion [s^{-2}]

$$\alpha_{b,v\ load} = a_{b,v} \cdot \frac{2}{D}$$

$a_{b,v}$	Acceleration, deceleration	[m/s^2]

- Load inertia [kgm^2]

$$J_{load} = m \cdot \left(\frac{D}{2}\right)^2$$

- Acceleration torque and deceleration torque for the load [Nm]

  $M_{b,v\ load} = J_{load} \cdot \alpha_{b,v\ load}$

- Load torque at the drive wheel/pinion [Nm]

  $$M_{load} = (M_{b,v\ load} + M_W) \cdot \frac{1}{\eta_{mech}^{Sign(M_{b,v\ load} + M_W)}}$$

  η_{mech} Mech. efficiency of the travel drive

  $M_{b,v\ load}$ has to be applied with the correct sign (accelerate = +, decelerate = -)

If the deceleration is equal to the acceleration, the load torque is at a maximum during the acceleration phase.

Lifting drive

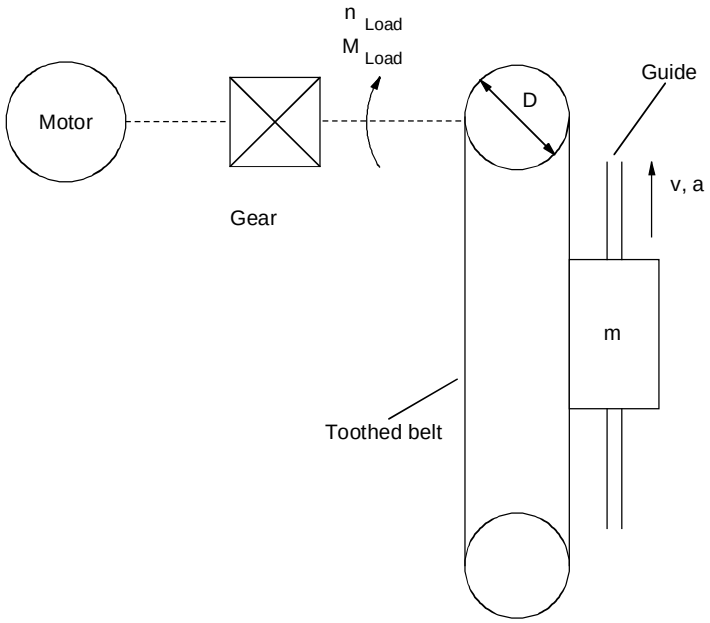

Fig. 11-3 Lifting drive

- $n_{load}, \alpha_{b,v\ load}$, J_{load} , $M_{b,v\ load}$ See "Horizontal travel drive"
- Lifting force [N]

  $F_H = m \cdot g$
- Lifting torque [Nm]

  $M_H = F_H \cdot \frac{D}{2}$
- Lifting torque at the drive wheel/pinion [Nm]

  $$M_{load\ up} = (M_{b,v\ load} + M_H) \cdot \frac{1}{\eta_{mech}^{Sign(M_{b,v\ load} + M_H)}}$$

  $$M_{Load\ down} = (M_{b,v\ load} + M_H) \cdot \eta_{mech}^{Sign(M_{b,v\ load} + M_H)}$$

  η_{mech} Mech. efficiency of the lifting drive

  $M_{b,v\ load}$ has to be applied with the correct sign (acceleration up, deceleration down = + , deceleration up, acceleration down = -)

If the deceleration is equal to the acceleration, the load torque is at a maximum during the upwards acceleration phase.

Turning drive

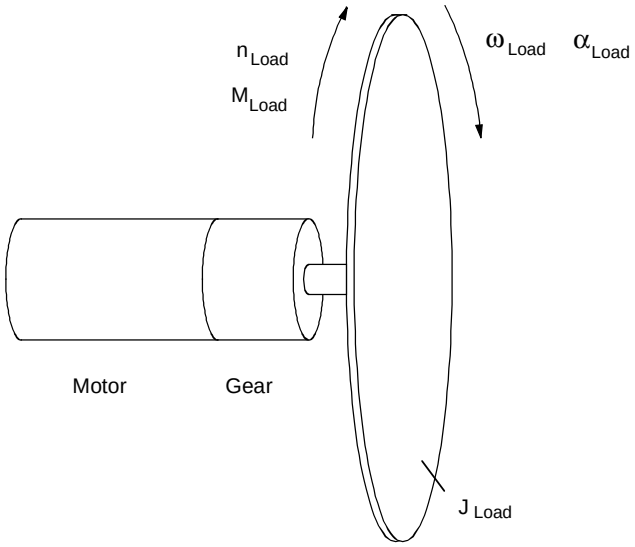

Fig. 11-4 Turning drive

- Speed under load [rpm]

$$n_{load} = \frac{\omega_{load} \cdot 60}{2 \cdot \pi}$$

ω_{load} Angular speed of the load [s^{-1}]

$\alpha_{b,v\ load}$ Angular acceleration/deceleration of the load [s^{-2}]

- Load torque [Nm]

$$M_{load} = J_{load} \cdot \alpha_{b,v\ load} \cdot \frac{1}{\eta_{mech}^{sign(\alpha_{b,v\ load})}}$$

η_{mech} Mech. efficiency of the turning drive

$\alpha_{b,v\ load}$ has to be applied with the correct sign (accelerate = +, decelerate = -)

If the deceleration is equal to the acceleration, the load torque is at a maximum during the acceleration phase.

Horizontal spindle drive

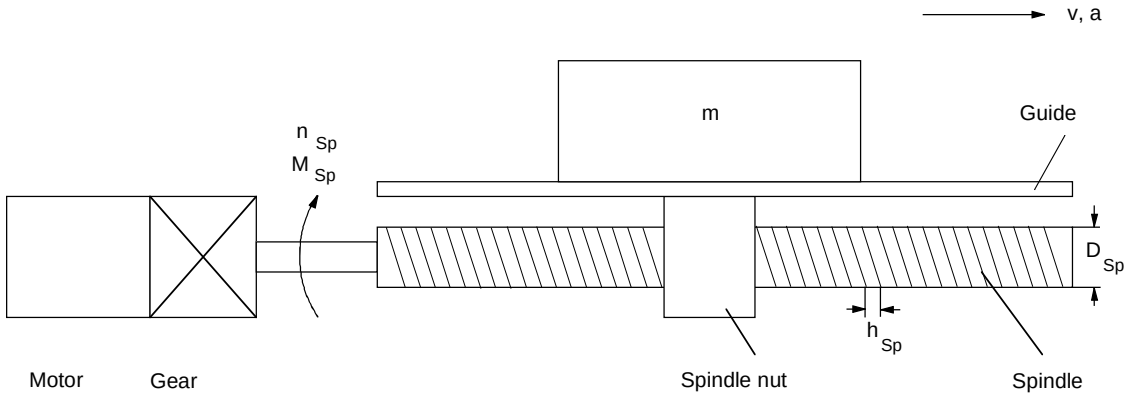

Fig. 11-5 Horizontal spindle drive

- Spindle speed [rpm]

$$n_{Sp} = \frac{v \cdot 60}{h_{Sp}}$$

v Speed [m/s]
h_{Sp} Spindle pitch [m]

- Angle of pitch of spindle [wheel]

$$\alpha_{SW} = \arctan\left(\frac{h_{Sp}}{\pi \cdot D_{Sp}}\right)$$

D_{Sp} Spindle diameter [m]

- Frictional angle of spindle [wheel]

$$\rho = \arctan\left(\frac{\tan(\alpha_{SW})}{\eta_{Sp}}\right) - \alpha_{SW}$$

η_{Sp} Spindle efficiency

- Angular acceleration and deceleration of the spindle [s^{-2}]

$$\alpha_{b,v\,Sp} = a_{b,v} \cdot \frac{2 \cdot \pi}{h_{Sp}}$$

- Frictional force of guide [N]

$$F_W = m \cdot g \cdot w_F$$

w_F Specific travel resistance

- Acceleration force [N]

  $F_{b,v} = m \cdot a_{b,v}$

- Acceleration and deceleration torque for spindle [Nm]

  $M_{b,v\ Sp} = J_{Sp} \cdot \alpha_{b,v\ Sp}$

  J_{Sp} Inertia of spindle [kgm^2]

- Load torque at the spindle [Nm]

  $$M_{Sp} = M_{b,v\ Sp} + (F_{b,v} + F_W) \cdot \tan(\alpha_{SW} + \rho \cdot \mathrm{sign}(F_{b,v} + F_W)) \cdot \frac{D_{Sp}}{2}$$

  $M_{b,v\ Sp}$, $F_{b,v}$ has to be applied with the correct sign
  (accelerate = +, decelerate = -)

If the deceleration is equal to the acceleration, the load torque is at a maximum during the acceleration phase.

Vertical spindle drive

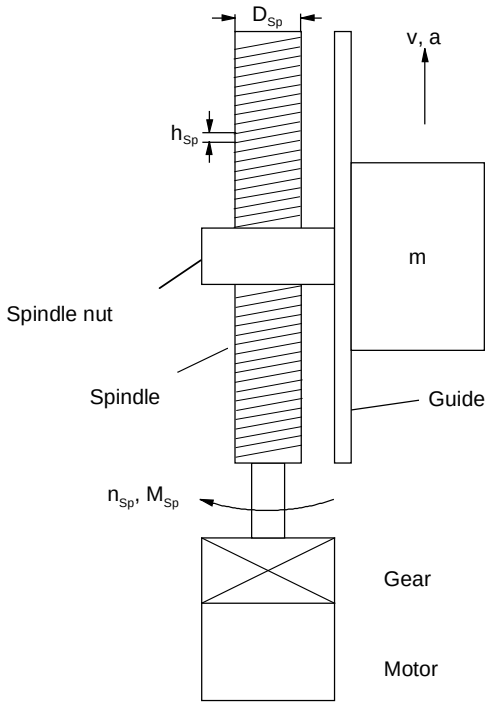

Fig. 11-6 Vertical spindle drive

- n_{Sp} , α_{SW} , ρ , $\alpha_{b,v\,Sp}$ see "Horizontal spindle drive"
- $F_{b,v}$, $M_{b,v\,Sp}$ see "Horizontal spindle drive"
- Lifting force [N]
  $F_H = m \cdot g$
- Load torque at the spindle [Nm]:

$$M_{Sp\,up} = M_{b,v\,Sp} + (F_{b,v} + F_H) \cdot \tan(\alpha_{SW} + \rho \cdot \mathrm{sign}(F_{b,v} + F_H)) \cdot \frac{D_{Sp}}{2}$$

$$M_{Sp\,down} = M_{b,v\,Sp} + (F_{b,v} + F_H) \cdot \tan(\alpha_{SW} - \rho \cdot \mathrm{sign}(F_{b,v} + F_H)) \cdot \frac{D_{Sp}}{2}$$

$M_{b,v\,Sp}$, $F_{b,v}$ has to be applied with the correct sign (acceleration up, deceleration down = +, deceleration up, acceleration down = -)

If the deceleration is equal to the acceleration, the load torque is at a maximum during the upwards acceleration phase.

For selecting the gear, there are various other variables in addition to the maximum speed under load and the maximum load torque, e.g. size, efficiency, torsional play, torsional strength, moment of inertia, noise. Planetary gears are especially suitable for positioning tasks due to their low torsional play and high torsional stiffness. These gears also have a high power density, are highly efficient and produce a low amount of noise. When the gear transmission ratio is being selected, it should be borne in mind that higher motor speeds generally entail smaller motors. This must be checked, however, in each individual case. A higher gear transmission ratio has a favourable effect on positioning accuracy in relation to the encoder resolution. The positioning accuracy is calculated as follows from the components gears, encoder and mechanical system:

$$\Delta s_{gear} = \frac{D \cdot \pi}{360^\circ} \cdot \alpha_G \text{ [mm]}$$

$$\Delta s_{encoder} = \frac{D \cdot \pi}{i \cdot z} \text{ [mm] or}$$

$$\Delta s_{encoder} = \frac{h_{Sp}}{i \cdot z} \text{ with spindle drives [mm]}$$

$$\Delta s_{total} = \Delta s_{gear} + \Delta s_{encoder} + \Delta s_{mech} \text{ (steady-state) [mm]}$$

Δs_{mech} is the imprecision of the mechanical system such as due to expansion of the toothed belt in mm.

α_G Torsional angle of the gear [degree]
z Number of pulses per encoder revolution
D Drive wheel/pinion diameter [mm]
h_{Sp} Spindle pitch [mm]
i Gear transmission ratio

In the case of a pure acceleration drive without additional forces and torques, the optimum gear transmission ratio for the smallest motor torque and thus also for the smallest motor current can be calculated as follows for a given motor:

$$i_{opt} = \sqrt{\frac{J_{load}}{J_{Mot}}}$$

It is, however, not always possible to implement this optimum gear transmission ratio, e.g. if the resulting motor speed is too high.

11.4 Selection of the motor

- The motor is selected according to the following criteria:
- Adherence to the dynamic limits, i.e. all M,n points of the load cycle must be below the limit curve.
- The motor speed must be smaller than $n_{max\ perm.}$ With synchronous servomotors, the maximum motor speed should not be greater than the rated speed. With induction servomotors, the maximum motor speed must not be more than 1.2 times the rated speed in the field weakening area.
- Adherence to the thermal limits, i.e. with synchronous servomotors, the motor rms torque at the mean motor speed resulting from the load cycle must be below the S1 curve. With induction servomotors, the rms value of the motor current within a load cycle must be smaller than the rated current of the motor.

When synchronous servomotors are used, it must be borne in mind that the maximum permissible motor torque at high speeds is reduced by the voltage-limit curve. In addition, a distance of about 10 % should be kept to from the voltage-limit curve as a protection against voltage fluctuations.

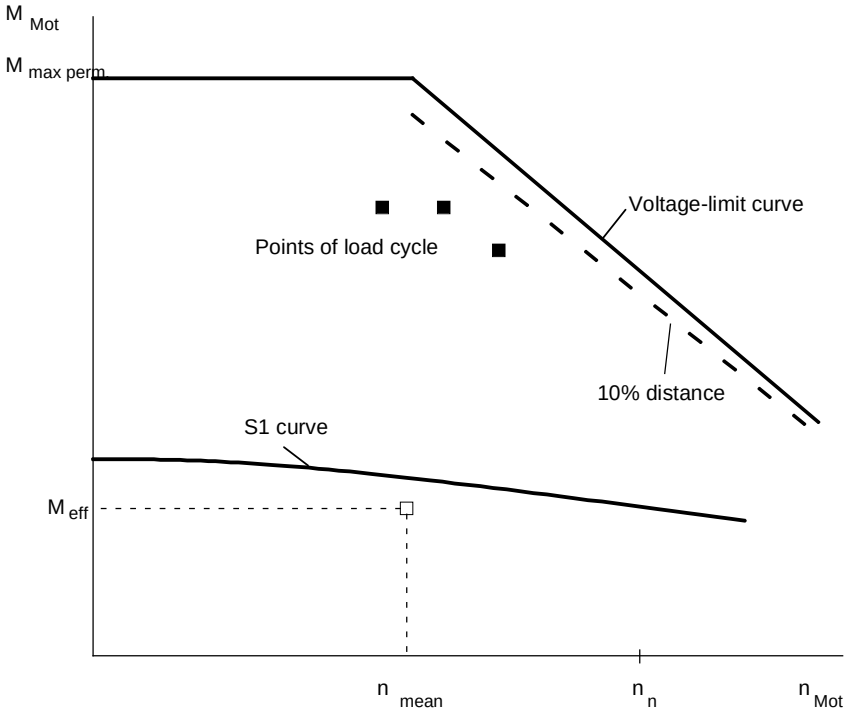

Fig. 11-7 Limit curves for 1FK6/1FT6 motors (synchronous servomotors)

If induction servomotors are used, the permissible motor torque in the field-weakening range is reduced by the stalling limit. Here, a distance of approximately 30 % should be kept to.

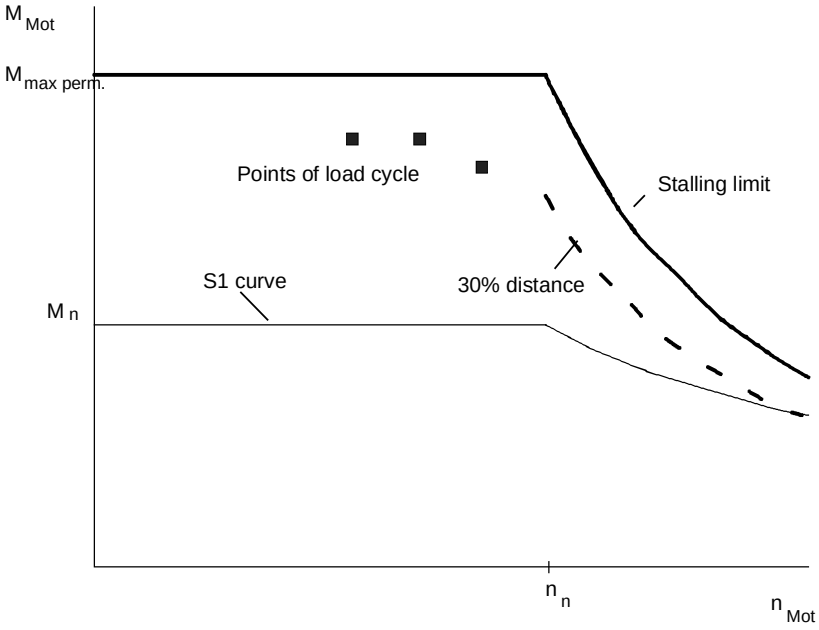

Fig. 11-8 Limit curves for 1PA6 motors (induction servomotors)

In order to keep a check on the dynamic limits, the relevant points of the torque curve must be calculated. In general, the motor torque at maximum speed during the acceleration phase is decisive. The motor torque and motor speed are calculated as follows when load torque, speed under load and angular acceleration/deceleration on the gear-output side are known:

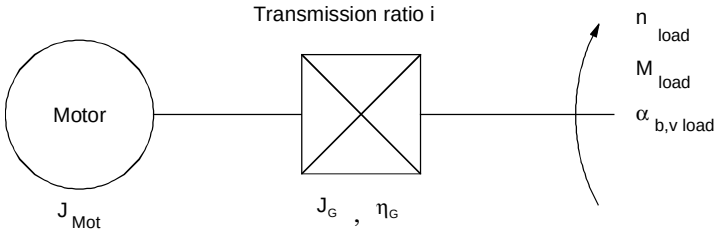

$$M_{Mot} = J_{Mot} \cdot i \cdot \alpha_{b,v\,load} + J_G^* \cdot i \cdot \alpha_{b,v\,load} + M_{load} \cdot \frac{1}{i \cdot \eta_G^{Sign(M_{load})}}$$

$$n_{Mot} = i \cdot n_{load}$$

J_{Mot} Motor inertia

J_G^* Gear moment of inertia referred to motor speed

η_G Gear efficiency

With the motor torque of lifting drives, a difference is made between upwards and downwards:

$$M_{Mot\,up} = J_{Mot} \cdot i \cdot \alpha_{b,v\,load} + J_G^* \cdot i \cdot \alpha_{b,v\,load} + M_{load\,up} \cdot \frac{1}{i \cdot \eta_G^{Sign(M_{load\,up})}}$$

$$M_{Mot\,down} = J_{Mot} \cdot i \cdot \alpha_{b,v\,load} + J_G^* \cdot i \cdot \alpha_{b,v\,load} + M_{load\,down} \cdot \frac{\eta_G^{Sign(M_{load\,down})}}{i}$$

$\alpha_{b,v\,load}$ and M_{load} have to be applied with the correct signs (see also the examples under 11.3). If further moments of inertia are present on the motor side (e.g. coupling), these must also be taken into account.

In addition to the torque determined by the load and by the gears, the torque required for accelerating or decelerating the rotor's moment of inertia during dynamic processes is added to the motor torque.

$$M_{b,v\,Mot} = J_{Mot} \cdot i \cdot \alpha_{b,v\,load}$$

Now a motor has to be selected which fullfils the condition for the maximum motor torque in the required speed range. The proportion of the acceleration torque for the motor rotor in relation to the maximum motor torque depends on the motor's moment of inertia and the angular acceleration but also on the moment of inertia of the load, the gear transmission ratio and the static load torque.

A second point to be checked is whether the thermal limits are adhered to.

Synchronous servomotors

In order to calculate the rms torque, the motor torque must be determined in all parts of the travel curve. The following formula is used to calculate the rms torque and the mean motor speed:

$$M_{eff} = \sqrt{\frac{\sum M^2_{Mot\,i} \cdot \Delta t_i}{T}}$$

$$n_{mean} = \frac{\sum \frac{\left| n_{Mot\,A} + n_{Mot\,E} \right|}{2} \cdot \Delta t_i}{T}$$

T Cycle time

$M_{Mot\,i}$ Motor torque in time segment Δt_i

$\frac{\left| n_{Mot\,A} + n_{Mot\,E} \right|}{2}$ Mean motor speed in time segment Δt_i

(A: initial value, E: final value)

When calculating the mean motor speed, it must be borne in mind that the initial value and the final value of the motor speed should not have different signs. Thus, an interpolation point must exist for every zero passage.

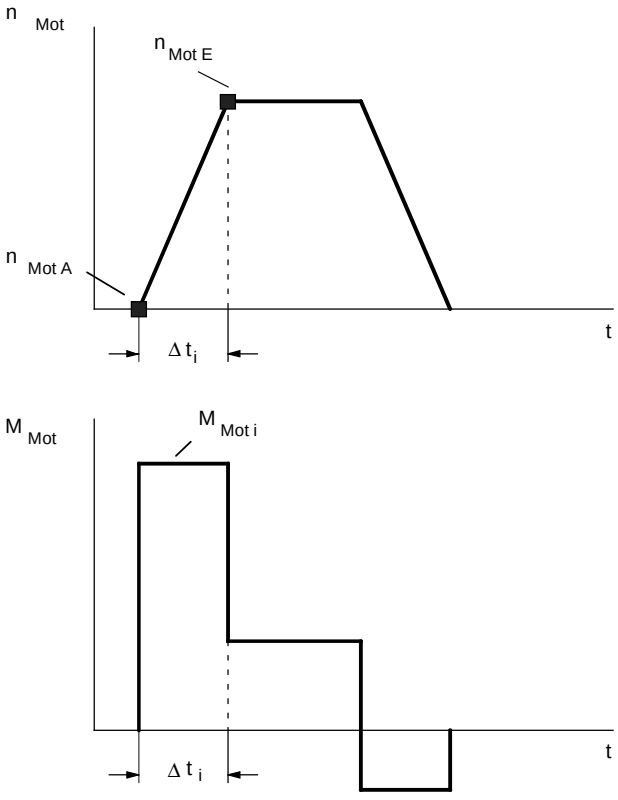

Fig. 11-9 Example of motor speed and motor torque in a time segment Δt_i

If the rms torque at the mean motor speed is below the S1 curve and the dynamic limits are being adhered to, the selected synchronous servomotor can be used.

Induction servomotors

In order to calculate the motor's rms current, the motor torque in all parts of the travel curve must first be determined. The motor current is thus calculated as follows:

$$I_{Mot} = I_n \cdot \sqrt{(\frac{M_{Mot}}{M_n})^2 \cdot (1-(\frac{I_{\mu n}}{I_n})^2) \cdot k_n^2 + (\frac{I_{\mu n}}{I_n})^2 \cdot \frac{1}{k_n^2}}$$

$I_{\mu n}$ Rated magnetizing current

$k_n = 1$ In the constant flux range

$k_n = \frac{n}{n_n}$ In the field weakening range

The rms value of the motor current is calculated as follows:

$$I_{eff} = \sqrt{\frac{\sum(\frac{I_{Mot\,A} + I_{Mot\,E}}{2})^2 \cdot \Delta t_i}{T}}$$

$\frac{I_{Mot\,A} + I_{Mot\,E}}{2}$ Mean motor current in time segment Δt_i

(A: initial value, E: final value)

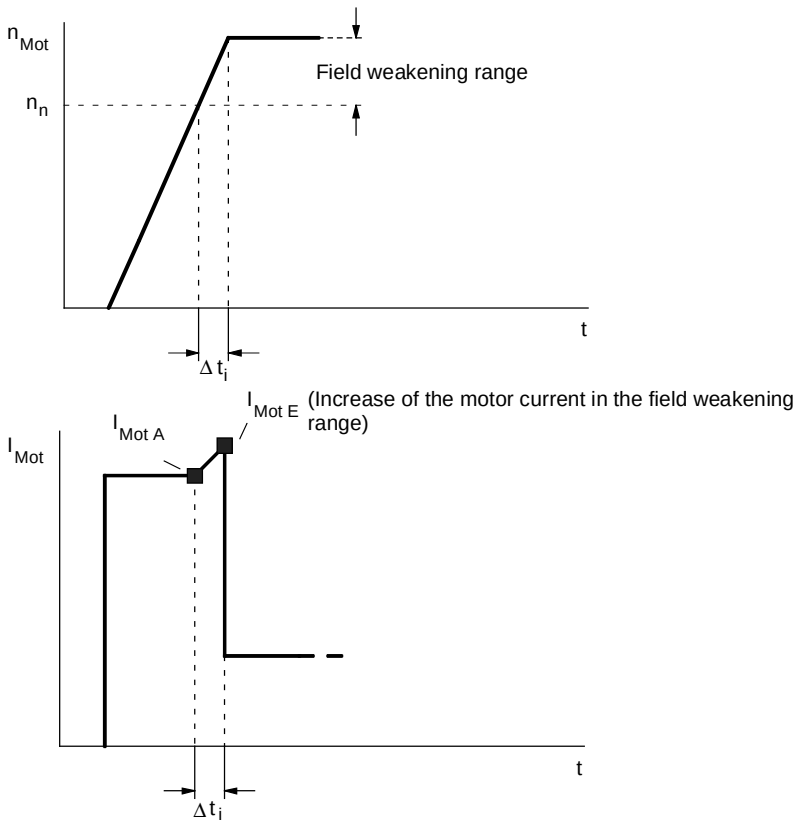

Fig. 11-10 Example of motor speed and motor current in a time segment Δt_i

If the dynamic limits are being adhered to and the rms value of the motor current is smaller than the motor's rated current, the selected induction servomotor can be used.

Encoders

Which encoder is selected depends on the requirements in each case. Encoders provide high resolution and extremely true running at the lowest speeds. They are thus especially suitable for highly accurate positioning tasks. Resolvers are robust and inexpensive and provide good resolution. Absolute-value encoders maintain the absolute position even after the power supply is de-energized which means that a new approach to reference point is not necessary with positioning drives. Contrary to synchronous servomotors, induction servomotors do not require a rotor position sensor such as an encoder or a resolver for motor control. A pulse encoder is adequate here.

11.5 Selection of converters or inverters

With single-axis drives, a converter now has to be selected and, with multi-axis drives, an inverter is necessary. The selection criteria are the same for both:

- The maximum motor current must be smaller than the maximum permissible output current of the converter/inverter. In the case of the Compact PLUS unit, if three times the rated current is utilized, this current must not flow for longer than 250 ms and then a pause of 750 ms has to be observed with only 0.91 times the rated current, otherwise 1.6 times the rated current is permissible for 60 s (see technical data).
- The arithmetic mean value of the motor current must be smaller than the rated current of the converter/inverter with a maximum cycle time of 300 s.

The second condition arises from the fact that the switching losses and forward losses in the inverter are approximately proportional to the output current. The rms value can also be calculated instead of the arithmetic mean value. One is then more on the safe side, but it requires more calculation work.

In order to determine the motor current at a given motor torque, the following formula is used:

- For synchronous servomotors

$$I_{Mot} = \frac{M_{Mot}}{kTn} \text{ for } M_{Mot} \leq M_0$$

kTn Torque constant in Nm/A
M_0 Standstill torque

In general, the maximum motor current occurs during the acceleration phase. At motor torques > M_0, the motor current may possibly be higher than calculated with kTn due to saturation effects. In this case, the motor current is calculated as follows:

$$I_{Mot} = \frac{M_{Mot}}{kTn \cdot (1 - (\frac{M_{Mot} - M_0}{M_{max} - M_0})^2 \cdot (1 - \frac{M_{max} \cdot I_0}{M_0 \cdot I_{max}}))} \quad \text{for } M_{Mot} > M_0$$

I_0 Standstill current

M_{max} Maximum permissible motor torque

I_{max} Maximum permissible motor current

♦ For induction servomotors
Calculation of the motor current is as described under 11.4. Acceleration into the field-weakening range with a constant motor torque results in the maximum motor current in the field-weakening range at maximum speed.

The following formula is used to calculate the arithmetic mean of the motor current:

- For synchronous servomotors

$$I_{Mot\ mean} \approx \frac{\sum |M_{Mot\ i}| \cdot \Delta t_i}{kTn \cdot T}$$

$M_{Mot\ i}$ Motor torque in time segment Δt_i

T Cycle time

- For induction servomotors

$$I_{Mot\ mean} = \frac{\sum \frac{I_{Mot\ A} + I_{Mot\ E}}{2} \cdot \Delta t_i}{T}$$

$\frac{I_{Mot\ A} + I_{Mot\ E}}{2}$ Mean motor current in time segment Δt_i

(A: initial value, E: final value)

11.6 Selection of the rectifier unit for multi-axis drives

When multi-axis drives are used, several inverters are supplied with power by a rectifier unit. When the rectifier unit is being selected, it must be determined whether all the drives can work at the same time. The criteria for making the selection are as follows:

- The maximum DC link current occurring must be smaller than the maximum permissible output current of the rectifier unit. In the case of a Compact PLUS rectifier unit, if three times the rated current is utilized, this current must not flow for longer than 250 ms, otherwise 1.6 times the rated current is permissible for 30 s (see technical data). If a Compact PLUS rectifier unit is not used, the maximum output current must not exceed 1.36 times the rated current for a time of 60 s (see technical data).
- The arithmetic mean value of the DC link current must be smaller than the rated value of the DC link current of the rectifier unit when the maximum cycle time is 300 s.

The second condition arises from the fact that the forward losses in the rectifier are approximately proportional to the DC link current. The rms value can also be calculated instead of the arithmetic mean value. One is then more on the safe side, but it requires more calculation work.

The DC link current is calculated as follows:

$$I_{Link\,Rect} = \sum I_{Link\,Inv}$$

$$I_{Link\,Inv} = \frac{P_{Mot}}{\eta_{Mot} \cdot \eta_{Inv} \cdot U_{Link}}$$

DC link current of an inverter in motor operation

$$U_{Link} = 1.35 \cdot U_{Line}$$

DC link voltage

$$P_{Mot} = \frac{M_{Mot} \cdot n_{Mot}}{9.55}$$

Motor output in W

M_{Mot} Motor torque in Nm
n_{Mot} Motor speed in rpm
η_{Mot} Motor efficiency
η_{Inv} Inverter efficiency ($\approx$0.98)

When the rectifier is being selected, only motor operation needs to be considered. The maximum DC link current occurs when all the motors connected to the inverters have to simultaneously produce the maximum motor output. If this is not the case, the rectifier unit can be smaller. The total number of connected inverters, however, must not be too large because, otherwise, precharging of the rectifier unit can be overloaded (see technical data).

In order to determine the arithmetic mean value of the DC link current, the mean values of the individual inverters are added together. For one inverter, the calculation is as follows:

$$I_{Link\ Inv\ mean} = \frac{P_{Mot\ mean}}{\eta_{Mot} \cdot \eta_{Inv} \cdot U_{Link}}$$

$$P_{Mot\ mean} = \frac{\sum \frac{P_{Mot\ A} + P_{Mot\ E}}{2} \cdot \Delta t_i}{T}$$

$\frac{P_{Mot\ A} + P_{Mot\ E}}{2}$ Mean motor output in time segment Δt_i [W]

(A: initial value, E: final value)

T Cycle time

Only positive motor outputs are evaluated. When calculating the mean motor output, one must make sure that the initial value and the final value of the motor speed do not have different signs. An interpolation point must therefore exist for every zero passage.

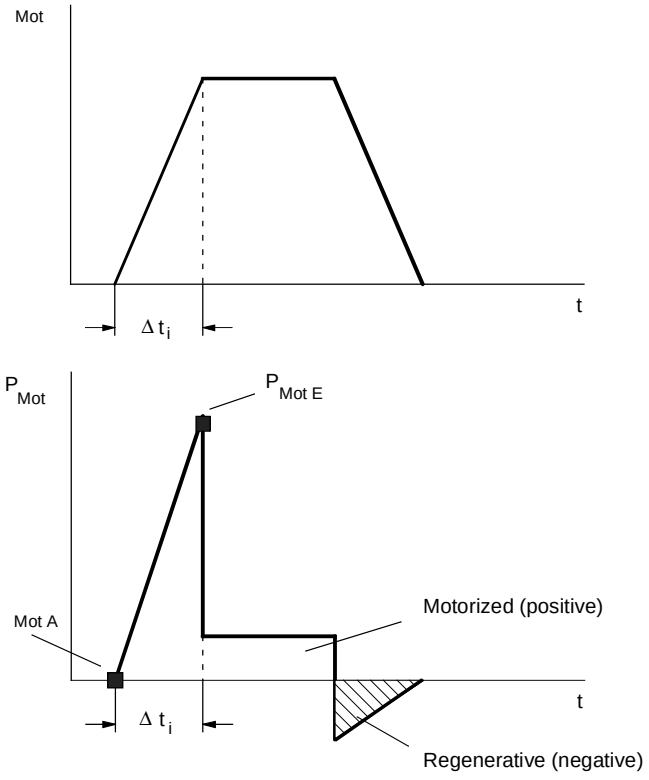

Fig. 11-11 Example of motor speed and motor output in a time segment Δt_i

Adding the mean values for the individual inverters gives the mean value for the rectifiers as follows:

$$I_{Link\ Rect\ mean} = \sum I_{Link\ Inv\ mean}$$

11.7 Selection of the braking units and braking resistors

Compact PLUS

On Compact PLUS units, the choppers for the braking resistors are provided in the converters and in the rectifier unit (in the case of multi-axis drives with several inverters).

For further information regarding the selection of the braking resistor, please refer to the MASTERDRIVES Motion Control Catalog DA 65.11 1999, Chapter 3.

The following criteria apply to the braking resistors:

- The maximum braking power which occurs must be smaller than $15 \cdot P_{20}$. This power must not occur for more than 3 s (see technical data).
- The mean braking power must be smaller than $P_{20} / 4.5$ with a maximum cycle time of 90 s

Compact and chassis type units

The braking units for Compact and chassis type units are autonomous components. The braking units, up to a power of P_{20} = 20 kW, have an internal braking resistor. Instead of the internal braking resistor, an external braking resistor can be used to increase the continuous power output. The following criteria apply to the selection process:

- The maximum braking power which occurs must be smaller than $15 \cdot P_{20}$. This power must not occur for longer than 0.4 s when there is an internal braking resistor or 3 s when there is an external braking resistor (see technical data).
- The mean braking power must be smaller than $P_{20} / 36$ when an internal braking resistor is used or smaller than $P_{20} / 4.5$ when an external braking resistor is used. The maximum cycle time is 90 s.

For further information regarding the selection of the braking resistor, please refer to the MASTERDRIVES Motion Control Catalog DA 65.11 1999, Chapter 3.

Braking power

The braking power is calculated as follows:

$$P_{br} = P_{Mot\,v} \cdot \eta_{Mot} \cdot \eta_{Inv}$$

$$P_{Mot\,v} = \frac{M_{Mot\,v} \cdot n_{Mot}}{9550}$$

$P_{Mot\,v}$ Motor output during braking in kW

$M_{Mot\,v}$ Motor torque during braking in Nm

n_{Mot} Motor speed in rpm

The maximum motor braking power $P_{Mot\,v\,max}$ generally occurs at the beginning of deceleration when the motor is running at maximum speed. If several inverters are operated from one rectifier unit, a check must be made to see whether several drives can brake simultaneously. In the event of an emergency stop, all drives may have to be shut down at the same time.

The mean braking power is calculated as follows:

$$P_{br\,mean} = \frac{\sum \frac{P_{Mot\,v\,A} + P_{Mot\,v\,E}}{2} \cdot \Delta t_i}{T} \cdot \eta_{Mot} \cdot \eta_{Inv}$$

$\frac{P_{Mot\,v\,A} + P_{Mot\,v\,E}}{2}$ Mean motor braking power in time segment Δt_i

(A: initial value, E: final value)

T Cycle time

Only negative motor outputs are evaluated. When calculating the mean motor output, it must be borne in mind that the initial value and the final value of the motor speed do not have different signs. An interpolation point must therefore exist for every zero passage.

If several inverters are connected to one rectifier unit, the mean value is calculated by adding together the individual mean values for the inverters.

11.8 Selection of other components

The selection tables in Catalog DA65.11 are used to make a list of the other components needed on the rectifier side and on the load side.

Rectifier side	Load side
Line fuses	Output reactor
Line switch	
Line contactor	
Line reactor	
Line filter	

Table 11-1 Selection of other components

Line fuses

Line fuses, or circuit-breakers in the lower output range, are generally always necessary. In addition to line protection, fuses with gR characteristics also protect semiconductors (rectifier). Fuses with gL characteristics or circuit-breakers are only for line protection; in the event of a fault in the rectifier or in the DC link, the semiconductors of the rectifier are not protected. Fuses with gL characterstics or circuit-breakers are therefore appropriate if units have to be replaced in the event of a fault. If repairs have to be carried out locally, e.g. for large outputs, the use of fuses with gR characteristics is recommended.

Line switches

Line switches are used to disconnect the voltage on converters or rectifier units. Depending on the customer's requirements, line switches can be executed as main and emergency OFF switches (for installing in doors), as load disconnectors with and without fuses, or as fuse switch disconnectors.

Line contactor

The converter or the rectifier unit can be disconnected from the voltage supply in the event of a fault by means of the line contactor or also via the OFF command. The use of a line contactor prevents other components, for example, pre-charging resistors, braking resistors, from being damaged if there is a fault.

Line reactor

A line reactor reduces the harmonics of the system on the one hand and protects the DC link capacitors from excessive current spikes on the other. A line reactor with 2% u_k is necessary from a ratio:

System fault power > 33 x rated converter output

or if a rectifier unit is used together with inverters:

System fault power > 33 x total rated inverter outputs

Line filters

Line filters are necessary if a certain radio interference level in accordance with EN 55011 has to be maintained (class A1 for chassis type units and B1 for Compact and Compact PLUS type units). The A1 or B1 radio interference level can only be maintained in conjunction with a 2% u_k line reactor and shielded motor cables. On the Compact PLUS type unit, the line reactor is contained in the line filter.

Output reactors, sinusoidal filters, dv/dt filters

It is **not** permissible to use output reactors, sinusoidal filters and dv/dt filters in the case of MASTERDRIVES Motion Control.

Notes regarding the use of a power back-up module

The power back-up module is for increasing the capacity of the DC link. This can bridge a short-time power-system failure, on the one hand, and also enables intermediate storage of braking energy, on the other.

- Storage capacity in the event of a power failure:

$$W = \frac{1}{2} \cdot C \cdot (U_{Link\,n}^2 - U_{Link\,min}^2)$$

With a 400 V supply voltage and when C = 5.1 mF and $U_{Link\,min}$ = 400 V, for example, the storage capacity is calculated as follows:

$$W = \frac{1}{2} \cdot 5.1 \cdot 10^{-3} \cdot ((1.35 \cdot 400)^2 - 400^2) = 336\ Ws$$

With a 460 V supply voltage, the storage capacity increases to 575 W. The possible bridging time t_{bri} is calculated with the output power P as follows:

$$t_{bri} = \frac{W}{P}$$

The storage capacity during regenerative operation is calculated as follows:

$$W = \frac{1}{2} \cdot C \cdot (U_{Link\,max}^2 - U_{Link\,n}^2)$$

With a 400 V supply voltage and when $U_{Link\,max}$=750 V:

$$W = \frac{1}{2} \cdot 5.1 \cdot 10^{-3} \cdot (750^2 - (1.35 \cdot 400)^2) = 691\,Ws$$

During braking, for example, from maximum speed to 0 within time t_v the braking energy is calculated as follows:

$$W_{br} = \frac{1}{2} \cdot P_{br\,max} \cdot t_v$$

with maximum motor braking power in W

$$P_{br\,max} = \frac{M_{Mot\,v\,max} \cdot n_{Mot\,max}}{9.55} \cdot \eta_{Mot} \cdot \eta_{Inv}$$

$M_{Mot\,v\,max}$ Maximum motor torque during braking in Nm

$n_{Mot\,max}$ Maximum motor speed during braking in rpm

- Maximum number of power back-up modules which can be connected on a Compact PLUS unit is
  - Two power back-up modules for rectifier units
  - One power back-up module for converters

Notes on pulse frequency

The level of the pulse frequency basically affects the dynamic response. Accordingly, when a high level of dynamic response is required, the pulse frequency should be set to 10 kHz. Use of the Compact PLUS does not therefore entail derating. Compact units and chassis-type units require derating of 6 or 3 Hz and upwards, depending on their power output (see technical data). A reduction of the permissible rated current entails a reduction of the permissible maximum current to the same amount. In addition, the maximum pulse frequency with chassis-type units is lower than 10 kHz (see technical data).

11.9 Calculating example

A three-axis conveyor vehicle is to be designed. The x-axis is the main propelling drive, the y-axis is the fork drive and the z-axis is the lifting drive. The propelling drive and the lifting drive can be operated simultaneously whereas the fork drive only operates alone. The x-axis and the y-axis are driven via toothed belts. The z-axis is driven via a gear rack. Three inverters are to be used on one rectifier unit. Positioning is to be carried out non-centrally in the inverter. The Profibus is to be used for connection to a PLC.

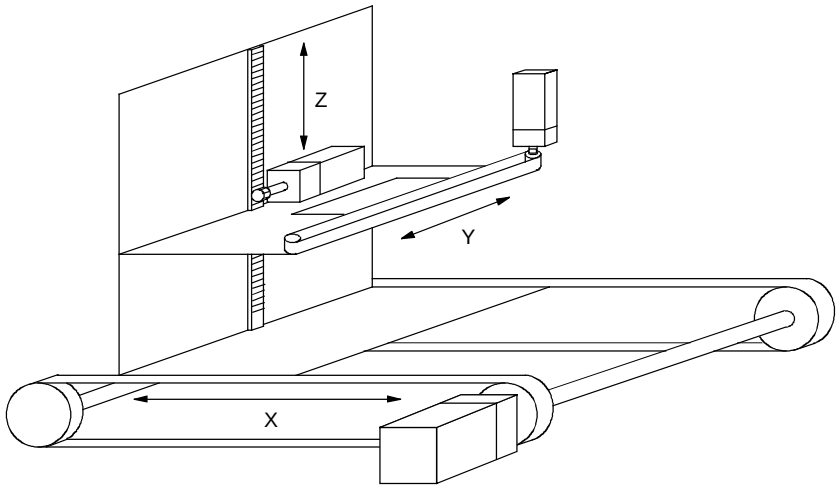

Fig. 11-12 Line drawing of a three-axis conveyor vehicle

11.9.1 Calculation of the x-axis as the travel gear

1. Data of the drive

- Mass to be transported — m= 400 kg
- Diameter of drive wheel — D= 0.14 m
- Max. speed — v_{max}= 1.6 m/s
- Max. acceleration and deceleration — a_{max}= 6.4 m/s2
- Distance travelled — s= 2 m
- Cycle time — T= 7 s
- Mech. efficiency — η_{mech}= 0.9
- Specific travelling resistance — w_f= 0.1
- Mech. accuracy — Δs_{mech}= ±0.1 mm
- Overall accuracy required — Δs_{tot}= ±0.2 mm

2. Travel curve

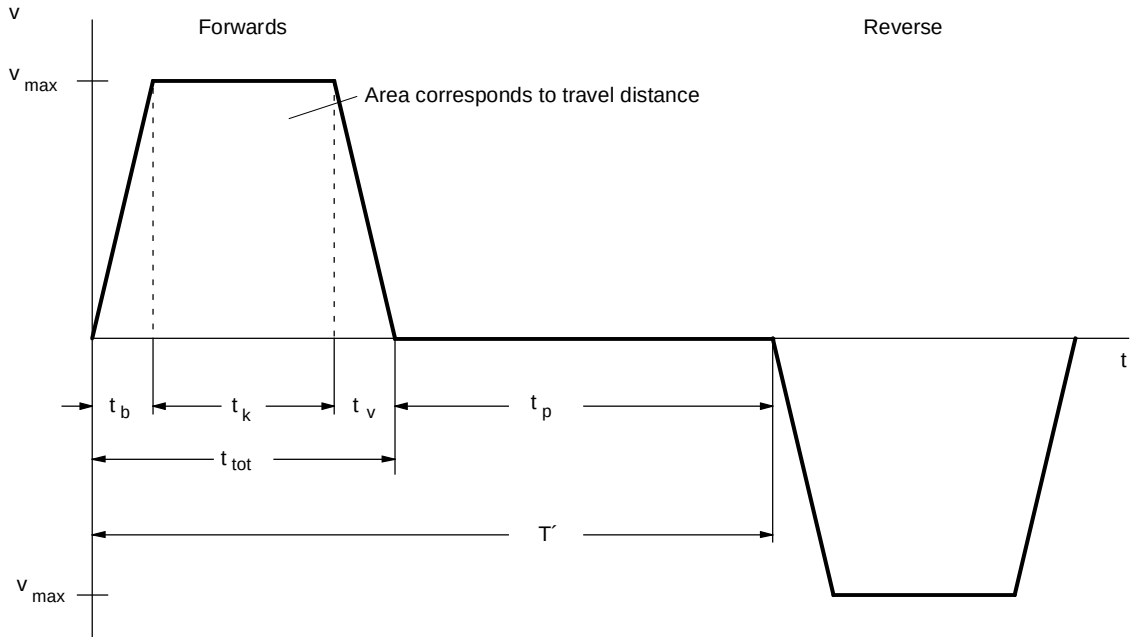

Fig. 11-13 Travel curve for forwards and reverse travel

It is sufficient to only consider forwards travel because the conditions are the same for forwards and reverse travel.

- The new cycle time is therefore:

$$T' = \frac{T}{2}$$

- For the remaining values of the travel curve, the following is obtained:

$$t_b = t_v = \frac{v_{max}}{a_{max}} = \frac{16}{6.4} = 0.25\ s$$

$$t_k = \frac{s - v_{max} \cdot \frac{t_b}{2} - v_{max} \cdot \frac{t_v}{2}}{v_{max}} = \frac{2 - 16 \cdot \frac{0.25}{2} - 16 \cdot \frac{0.25}{2}}{16} = 1s$$

$$t_{tot} = t_b + t_k + t_v = 0.25 + 1 + 0.25 = 15\ s$$

$$t_p = T' - t_{tot} = 3.5 - 15 = 2\ s$$

3. Max. speed under load, max. load torque, selection of the gear unit

- Max. speed under load at the drive wheel

$$n_{Load\,max} = \frac{v_{max} \cdot 60}{\pi \cdot D} = \frac{16 \cdot 60}{\pi \cdot 0.14} = 218.27\ \text{rpm}$$

A gear transmission ratio of i=10 is selected here. A synchronous servomotor can thus be used with a rated speed of 3000 rpm.

$$n_{Mot\,max} = i \cdot n_{Load\,max} = 10 \cdot 218.27 = 2182.7\ \text{rpm}$$

- Resistance torque

$$M_W = m \cdot g \cdot w_f \cdot \frac{D}{2} = 400 \cdot 9.81 \cdot 0.1 \cdot \frac{0.14}{2} = 27.47\ \text{Nm}$$

- Acceleration and deceleration torque for the load

$$\alpha_{load} = a_{max} \cdot \frac{2}{D} = 6.4 \cdot \frac{2}{0.14} = 914\ \text{s}^{-2}$$

$$J_{load} = m \cdot \left(\frac{D}{2}\right)^2 = 400 \cdot \left(\frac{0.14}{2}\right)^2 = 196\ \text{kgm}^2$$

$$M_{b,v\,load} = J_{load} \cdot \alpha_{load} = 196 \cdot 914 = 179.2\ \text{Nm}$$

- Max. torque on the output side of the gear unit

$$M_{load\,max} = (M_{b\,load} + M_W) \cdot \frac{1}{\eta_{mech}}$$

$$= (179.2 + 27.47) \cdot \frac{1}{0.9} = 229.6\ \text{Nm}$$

An SPG140-M1 planetary gear unit for mounting on 1FT6 motors is therefore used where

$M_{max} = 400$ Nm at i=10

$J_G^* = 0.001\,\text{kgm}^2$	moment of inertia referred to motor
$\eta_G = 0.95$	gear unit efficiency
$\alpha_G = 3'$	torsional play

- Acceleration and deceleration torque for the gear unit

$$M_{b,v\,G} = J_G^* \cdot \alpha_{load} \cdot i = 0.001 \cdot 914 \cdot 10 = 0.914\ \text{Nm}$$

- Positioning accuracy

$$\Delta s_{gear} = \frac{D \cdot \pi}{360^{\circ}} \cdot \frac{\alpha_G}{60} = \frac{0.14 \cdot \pi}{360} \cdot \frac{3}{60} = 0.061 mm$$

i.e. ± 0.0305 mm

$$\Delta s_{encoder} = \frac{D \cdot \pi}{i \cdot z} = \frac{0.14 \cdot \pi}{10 \cdot 4096} = \pm 0.01 mm$$ with an 8-pole resolver

$$\Delta s_{tot} = \Delta s_{mech} + \Delta s_{gear} + \Delta s_{encoder}$$

$$= 0.1 + 0.0305 + 0.01 = 0.1405 < 0.2 \text{ mm}$$

The required accuracy is thus complied with.

4. Selection of the motor

Selection with regard to the dynamic limit curve

- The maximum motor torque occurs here because the deceleration is equal to the acceleration.

$$M_{Mot\,max} = M_{b\,Mot} + M_{b\,G} + (M_{b\,load} + M_W) \cdot \frac{1}{i \cdot \eta_{mech} \cdot \eta_G}$$

$$= M_{b\,Mot} + 0.914 + (179.2 + 27.47) \cdot \frac{1}{10 \cdot 0.9 \cdot 0.95}$$

$$= M_{b\,Mot} + 25.08 \text{ Nm}$$

where $M_{b\,Mot} = J_{Mot} \cdot \alpha_{load} \cdot i = J_{Mot} \cdot 914 \cdot 10 = J_{Mot} \cdot 914\ s^{-2}$

The first 1FT6 motor with n_n=3000 rpm, which satisfies the condition or the dynamic limit curve, is the 1FT6084-8AF7 with P_n=4.6 kW, M_n=14.7 Nm, $M_{max\ perm}$=65 Nm, J_{Mot}=0.0065 kgm^2 (with brake), k_{Tn100}=1.34 Nm/A, η_{Mot}=0.92; M_0=20 Nm

- The acceleration and deceleration torque for the motor rotor is thus:

$$M_{b,v\,Mot} = 0.0065 \cdot 914 = 5.94 \text{ Nm}$$

- The maximum motor torque is equal to the motor torque during acceleration:

$$M_{Mot\,max} = M_{Mot\,b} = 5.94 + 25.08 = 3103 \text{ Nm}$$

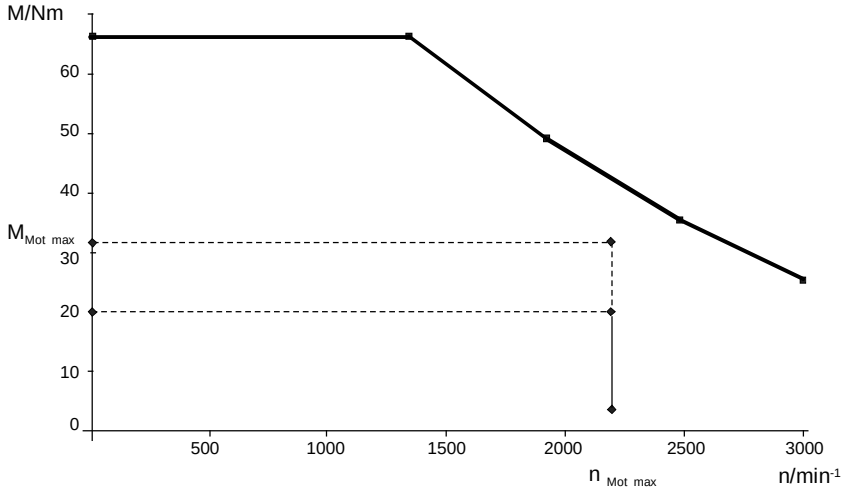

Fig. 11-14 Dynamic limit curve for the 1FT6084-8AF7 with the points of the load cycle

As a check on the thermal limits, the effective motor torque is calculated. This is done by determining all the motor torques within the travel curve in addition to the motor torque during acceleration.

- Motor torque during constant travel

$$M_{Mot\,k} = M_W \cdot \frac{1}{i \cdot \eta_{mech} \cdot \eta_G} = 27.47 \cdot \frac{1}{10 \cdot 0.9 \cdot 095} = 3.21\,Nm$$

- Motor torque during deceleration

$$M_{Mot\,v} = -M_{v\,Mot} - M_{v\,G} + (-M_{v\,Load} + M_W) \cdot \frac{1}{i \cdot (\eta_{mech} \cdot \eta_G)^{sign\,(-M_{v\,load} + M_W)}}$$

$$= -5.94 - 0.914 + (-179.2 + 27.47) \cdot \frac{0.9 \cdot 0.95}{10} = -19.83\,Nm$$

Here, the proportion of deceleration torque outweighs the resistance torque. Regenerative operation occurs. In this case, the efficiency levels are above the line (the sign before the bracketed term „$-M_{v\,load}+M_W$“ is negative).

The torque characteristic can be determined using the values calculated for the motor torque.

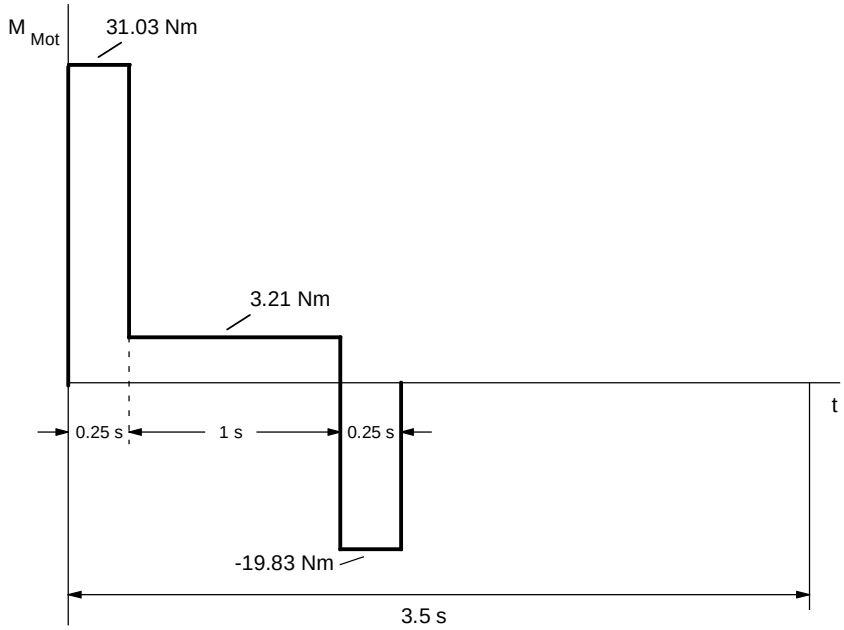

Fig. 11-15 Torque characteristic for forwards travel

- The effective motor torque is obtained from the torque characteristic as follows:

$$M_{eff} = \sqrt{\frac{\sum M_{Mot\,i}^2 \cdot \Delta t_i}{T'}}$$

$$= \sqrt{\frac{3103^2 \cdot 0.25 + 3.21^2 \cdot 1 + 19.83^2 \cdot 0.25}{3.5}} = 10\ \text{Nm}$$

- By using the travel curve, which is proportional to the speed, the mean motor speed is obtained:

$$n_{mean} = \frac{\sum \frac{|n_A + n_E|}{2} \cdot \Delta t_i}{T'}$$

$$= \frac{\frac{2182.7}{2} \cdot 0.25 + 2182.7 \cdot 1 + \frac{2182.7}{2} \cdot 0.25}{3.5} = 779.5\ \text{rpm}$$

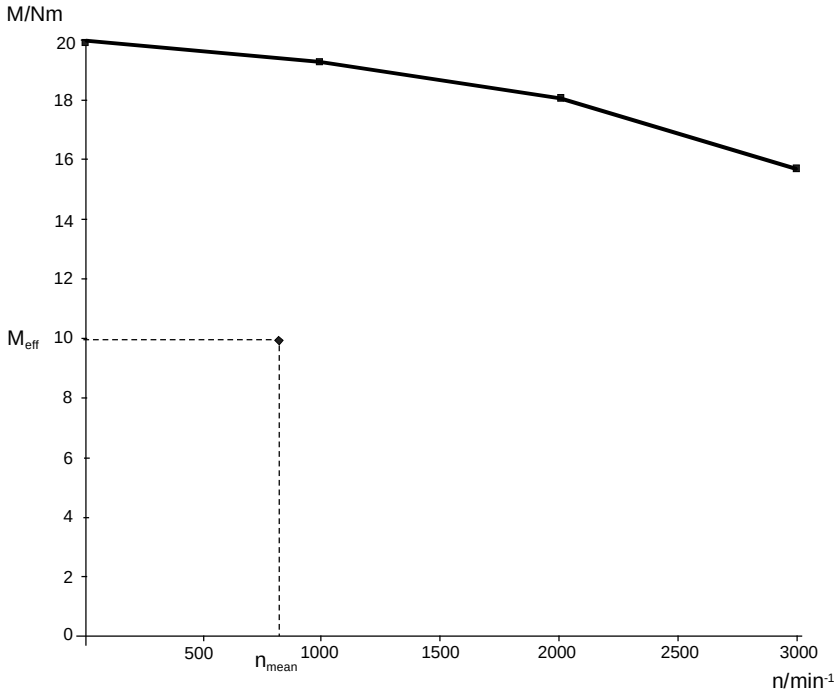

Fig. 11-16 S1 curve for the 1FT6084-8AF

The effective motor torque calculated is n_{mean} below the S1 curve. The motor is therefore suitable.

5. Selection of the inverter

The inverter is selected according to the maximum motor current and the mean value of the motor current.

- Maximum motor current (the saturation influence can be neglected here)

$$I_{Mot\,max} \approx \frac{M_{Mot\,max}}{k_{Tn100}} = \frac{3103}{134} = 23.16\ A$$

- Mean value of the motor current obtained from the magnitude of the torque characteristic

$$I_{Mot\,mean} \approx \frac{\sum \left| M_{Mot\,i} \right| \cdot \Delta t_i}{k_{Tn100} \cdot T'}$$

$$= \frac{3103 \cdot 0.25 + 3.21 \cdot 1 + 19.83 \cdot 0.25}{134 \cdot 3.5} = 3.4\ A$$

Because the accelerating and decelerating times are ≤ 0.25 s and the time between is ≥ 0.75 s, a check is now made to see if three-times the rated current of a Compact PLUS inverter can be utilized when I_{Un}=10.2 A.

- The following applies to the motor current during constant travel:

$$I_{Mot\,k} = \frac{M_{Mot\,k}}{k_{Tn100}} = \frac{3.21}{134} = 2.4\ A$$

- Thus:

$$I_{Mot\,max} = 23.16\ A \ < \ 3 \cdot I_{Un} = 30\ A$$

$$I_{Mot\,mean} = 3.4\ A \ < \ I_{Un} = 10.2\ A$$

$$I_{Mot\,k} = 2.4\ A \ < \ 0.91 \cdot I_{Un} = 9.3\ A$$

The 6SE7021-0TP50 Compact PLUS inverter can therefore be used when I_{Un}=10.2 A.

6. Determination of the DC link currents

The maximum DC link current and the mean value of the DC link current for the inverter which occur during motor operation must be determined for later rating of the rectifier unit. To do this, all motor power output levels within the travel curve first have to be calculated.

- Max. power output of motor during acceleration

$$P_{Mot\,b\,max} = \frac{M_{Mot\,b} \cdot n_{Mot\,max}}{9550} = \frac{3103 \cdot 2182.7}{9550} = 7.09\ kW$$

- Power output of motor during constant travel

$$P_{Mot\,k} = \frac{M_{Mot\,k} \cdot n_{Mot\,max}}{9550} = \frac{3.21 \cdot 2182.7}{9550} = 0.734\ kW$$

- Max. power output of motor during deceleration

$$P_{Mot\,v\,max} = \frac{M_{Mot\,v} \cdot n_{Mot\,max}}{9550} = \frac{-19.83 \cdot 2182.7}{9550} = -4.53\ kW$$

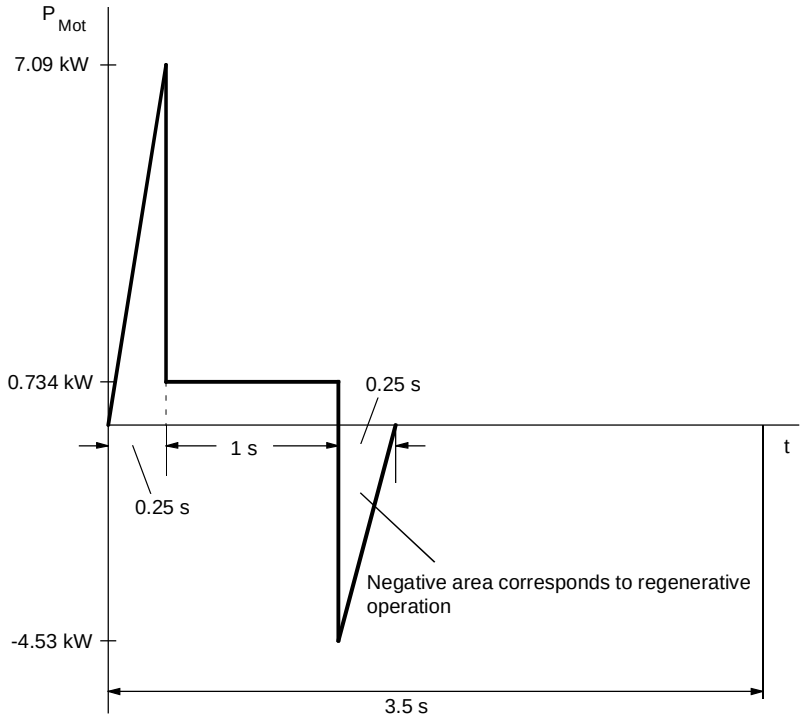

Fig. 11-17 Characteristic of the motor output for forwards travel

- The maximum DC link current during operation of the motor during acceleration is

$$I_{Link\ Inv\ max} = \frac{P_{Mot\ max}}{\eta_{Mot} \cdot \eta_{Inv} \cdot 135 \cdot U_{line}}$$

$$= \frac{7090}{0.92 \cdot 0.98 \cdot 135 \cdot 400} = 14.56\ A$$

- The mean motor power output during operation of the motor is calculated from the positive characteristic of the motor power output as follows:

$$P_{Mot\ mean} = \frac{\sum \frac{P_{Mot\ A} + P_{Mot\ E}}{2} \cdot \Delta t_i}{T'}$$

$$= \frac{\frac{1}{2} \cdot 7.09 \cdot 0.25 + 0.734 \cdot 1}{3.5} = 0.463\ kW$$

- The mean value of the DC link current is therefore:

$$I_{Link\ mean} = \frac{P_{Mot\ mean}}{\eta_{Mot} \cdot \eta_{Inv} \cdot 135 \cdot U_{Line}}$$

$$= \frac{463}{0.92 \cdot 0.98 \cdot 135 \cdot 400} = 0.95\ A$$

7. Determinination of braking power

The maximum braking power and the mean braking power have to be calculated for later rating of the braking resistors. The maximum power output of the motor during braking has already been calculated (see 6.).

- The maximum braking power is therefore:

$$P_{br\,max} = P_{Mot\,v\,max} \cdot \eta_{Mot} \cdot \eta_{Inv} = -4.53 \cdot 0.92 \cdot 0.98 = -4.08\,kW$$

- The mean braking power is obtained from the negative characteristic of the motor power output as follows:

$$P_{br\,mean} = \frac{\sum \frac{P_{Mot\,v\,A} + P_{Mot\,v\,E}}{2} \cdot \Delta t_i}{T'} \cdot \eta_{Mot} \cdot \eta_{Inv}$$

$$= \frac{\frac{1}{2} \cdot (-4.53) \cdot 0.25}{3.5} \cdot 0.92 \cdot 0.98 = -0.146\,kW$$

11.9.2 Calculating the y-axis as the travel gear

1. Data of the drive

♦ Mass to be transported	m= 100 kg
♦ Diameter of drive wheel	D= 0.1 m
♦ Max. speed	v_{max}= 1 m/s
♦ Max. acceleration and deceleration	a_{max}= 2.5 m/s^2
♦ Distance travelled	s= 0.5 m
♦ Cycle time	T= 7 s
♦ Mech. efficiency	η_{mech}= 0.9
♦ Specific travelling resistance	w_f= 0.1
♦ Mech. accuracy	Δs_{mech}= ±0.1 mm
♦ Overall accuracy required	Δs_{tot}= ±0.2 mm

NOTE

The same calculating procedures apply to the y-axis as the propelling drive as to the x-axis. This calculation is therefore dispensed with.

With i=10, the motor selected is a 1FT6041-4AF7 motor with a SPG75-M1 gear unit and the smallest 6SE7012-0TP50 Compact PLUS inverter with I_{Un}=2 A. Because the drive of the y-axis always runs alone and, with regard to its power, is small in comparison to the drives of the x-axis and the z-axis, it is not taken into account in the rating of the rectifier unit and the braking resistor.

11.9.3 Calculating the z-axis as the lifting drive

1. Drive data

- Mass to be transported — m= 200 kg
- Pinion diameter — D= 0.1 m
- Max. speed — v_{max}= 1.5 m/s
- Max. acceleration and deceleration — a_{max}= 2.5 m/s^2
- Lifting height — h= 1.35 m
- Cycle time — T= 7 s
- Mech. efficiency — η_{mech}= 0.9
- Mech. accuracy — Δs_{mech}= ±0.1 mm
- Overall accuracy required — Δs_{tot}= ±0.2 mm

2. Travel curve

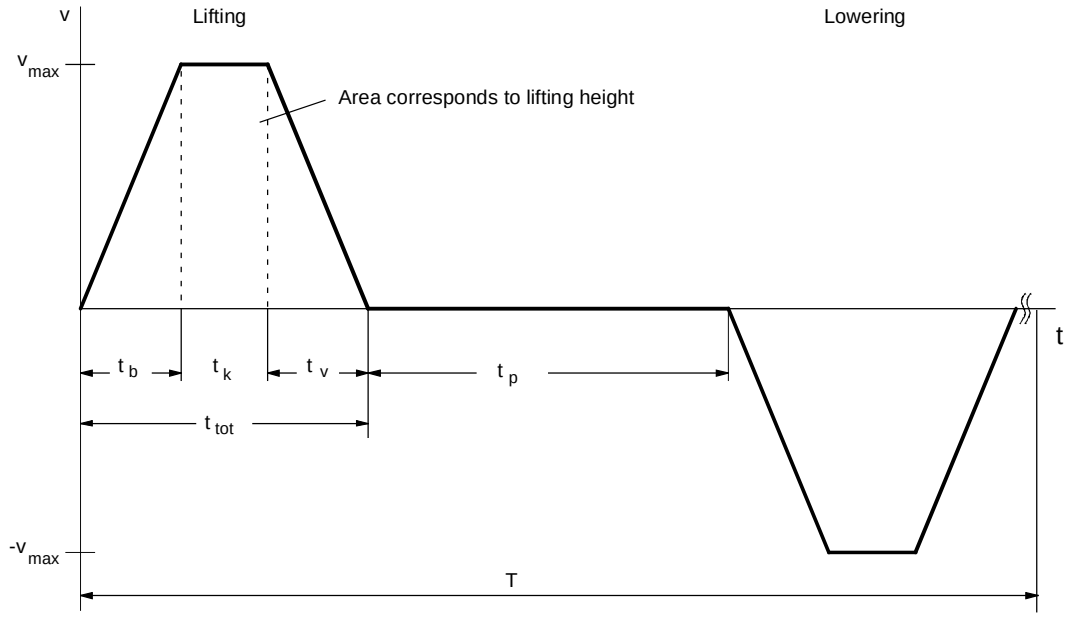

Fig. 11-18 Travel curve for lifting and lowering

The travel curve for lifting and lowering is symmetrical. Since the lifting torque and the lowering torque are different, however, the whole travel curve has to be considered.

- The following is obtained for the missing values of the travel curve:

$$t_b = t_v = \frac{v_{max}}{a_{max}} = \frac{15}{2.5} = 0.6\ s$$

$$t_k = \frac{h - v_{max} \cdot \frac{t_b}{2} - v_{max} \cdot \frac{t_v}{2}}{v_{max}} = \frac{135 - 15 \cdot \frac{0.6}{2} - 15 \cdot \frac{0.6}{2}}{15} = 0.3\ s$$

$$t_{tot} = t_b + t_k + t_v = 0.6 + 0.3 + 0.6 = 1.5\ s$$

$$t_p = \frac{T}{2} - t_{tot} = 3.5 - 1.5 = 2\ s$$

3. Max. speed under load, max. torque under load, selection of gear unit

♦ Max. speed under load at the pinion

$$n_{load\,max} = \frac{v_{max} \cdot 60}{\pi \cdot D} = \frac{15 \cdot 60}{\pi \cdot 0.1} = 286.5\,rpm$$

Here, a gear transmission ratio of i=10 is selected. A synchronous servomotor with a rated speed of 3000 rpm can therefore be used.

$$n_{Mot\,max} = i \cdot n_{load\,max} = 10 \cdot 286.5 = 2865\,rpm$$

♦ Lifting torque

$$M_H = m \cdot g \cdot \frac{D}{2} = 200 \cdot 9.81 \cdot \frac{0.1}{2} = 98.1\,Nm$$

♦ Acceleration and deceleration torque for the load

$$\alpha_{load} = a_{max} \cdot \frac{2}{D} = 2.5 \cdot \frac{2}{0.1} = 50\,s^{-2}$$

$$J_{load} = m \cdot (\frac{D}{2})^2 = 200 \cdot (\frac{0.1}{2})^2 = 0.5\,kgm^2$$

$$M_{b,v\,load} = J_{load} \cdot \alpha_{load} = 0.5 \cdot 50 = 25\,Nm$$

♦ Max. torque on the output side of the gear unit

$$M_{load\,max} = (M_{b\,load} + M_H) \cdot \frac{1}{\eta_{mech}} = (25 + 98.1) \cdot \frac{1}{0.9} = 136.8\,Nm$$

A SPG140-M1 planetary gear unit for mounting on 1FT6 motors is selected with

$M_{max} = 400\,Nm$ when i=10

$J_G^* = 0.001\,kgm^2$	Moment of inertia referred to the motor
$\eta_G = 0.95$	Gear unit efficiency
$\alpha_G = 3'$	Torsional play

♦ Acceleration and deceleration torque for the gear unit

$$M_{b,v\,G} = J_G^* \cdot \alpha_{Load} \cdot i = 0{,}001 \cdot 50 \cdot 10 = 0.5\,Nm$$

♦ Positioning accuracy

$$\Delta s_{Gear} = \frac{D \cdot \pi}{360^\circ} \cdot \frac{\alpha_G}{60} = \frac{0.1 \cdot \pi}{360} \cdot \frac{3}{60} = 0.0436\,mm$$

i.e. $\pm 0.0218\,mm$

$$\Delta s_{Encoder} = \frac{D \cdot \pi}{i \cdot z} = \frac{0{,}1 \cdot \pi}{10 \cdot 4096} = \pm 0.0077\,mm$$, with an 8-pole resolver

$$\Delta s_{tot} = \Delta s_{mech} + \Delta s_{Gear} + \Delta s_{Encoder}$$

$$= 0.1 + 0.0218 + 0.0077 = 0.1295 < 0.2\,mm$$

The accuracy requirement is thus satisfied.

4. Selection of motor

Selection in relation to the dynamic limit curve

- The max. motor torque here occurs during acceleration upwards since the deceleration is equal to the acceleration and the drive, during lifting, also has to overcome the levels of efficiency.

$$M_{Mot\,max} = M_{b\,Mot} + M_{b\,G} + (M_{b\,Load} + M_H) \cdot \frac{1}{i \cdot \eta_{mech} \cdot \eta_G}$$

$$= M_{b\,Mot} + 0.5 + (25 + 98.1) \cdot \frac{1}{10 \cdot 0.9 \cdot 0.95} = M_{b\,Mot} + 14.9\,Nm$$

with $M_{b\,Mot} = J_{Mot} \cdot \alpha_{Load} \cdot i = J_{Mot} \cdot 50 \cdot 10 = J_{Mot} \cdot 500\,s^{-2}$

The first 1FT6 motor with n_n=3000 rpm, which satisfies the condition or matches the dynamic limit curve, is the 1FT6082-8AF7 with P_n=3.2 kW, M_n=10.3 Nm, $M_{max\ perm}$ =42 Nm, J_{Mot}=0.00335 kgm^2 (with brake), k_{Tn100}=1.18 Nm/A, η_{Mot}=0.89, M_0=13 Nm

- The acceleration and deceleration torque for the motor rotor is thus

$$M_{b,v\,Mot} = 0.00335 \cdot 500 = 168\,Nm$$

- The max. motor torque is equal to the motor torque during acceleration:

$$M_{Mot\,max} = M_{Mot\,b\,up} = 168 + 14.9 = 16.58\,Nm$$

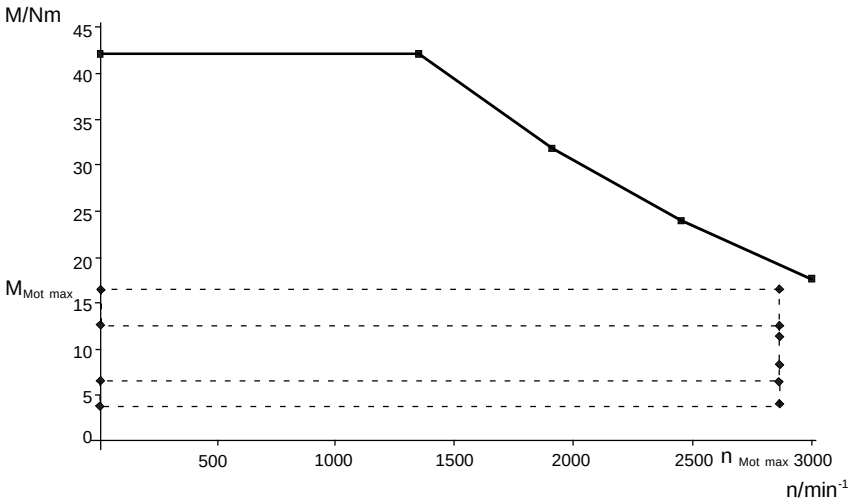

Fig. 11-19 *Fig. 11-19 Dynamic limit curve for the 1FT6082-8AF7 with the points of the load cycle*

In order to check the thermal limits, the effective motor torque is calculated. For this purpose, all other motor torques within the travel curve have to be calculated, in addition to the motor torque during acceleration.

- Lifting of the load, motor torque during constant travel

$$M_{Mot\,k\,up} = M_H \cdot \frac{1}{i \cdot \eta_{mech} \cdot \eta_G} = 98.1 \cdot \frac{1}{10 \cdot 0.9 \cdot 0.95} = 1147\ Nm$$

- Lowering of the load, motor torque during constant travel

$$M_{Mot\,k\,down} = M_H \cdot \frac{\eta_{mech} \cdot \eta_G}{i} = 98.1 \cdot \frac{0.9 \cdot 0.95}{10} = 8.39\ Nm$$

- Lifting of the load, motor torque during deceleration

$$M_{Mot\,up} = -M_{v\,Mot} - M_{v\,G} + (-M_{v\,Load} + M_H) \cdot \frac{1}{i \cdot (\eta_{mech} \cdot \eta_G)^{Sign\,(-M_{v\,Load} + M_H)}}$$

$$= -168 - 0.5 + (-25 + 98.1) \cdot \frac{1}{10 \cdot 0.9 \cdot 0.95} = 6.37\ Nm$$

Lowering of the load, motor torque during acceleration

$$M_{Mot\,b\,down} = -M_{b\,Mot} - M_{b\,G} + (-M_{b\,Load} + M_H) \cdot \frac{(\eta_{mech} \cdot \eta_G)^{Sign\,(-M_{b\,Load} + M_H)}}{i}$$

$$= -168 - 0.5 + (-25 + 98.1) \cdot \frac{0.9 \cdot 0.95}{10} = 4.08\ Nm$$

- Lowering of the load, motor torque during deceleration

$$M_{Mot\,v\,down} = M_{v\,Mot} + M_{v\,G} + (M_{v\,Load} + M_H) \cdot \frac{\eta_{mech} \cdot \eta_G}{i}$$

$$= 168 + 0.5 + (25 + 98.1) \cdot \frac{0.9 \cdot 0.95}{10} = 12.7\ Nm$$

The motor curve can be determined with the help of the values calculate for the motor torque.

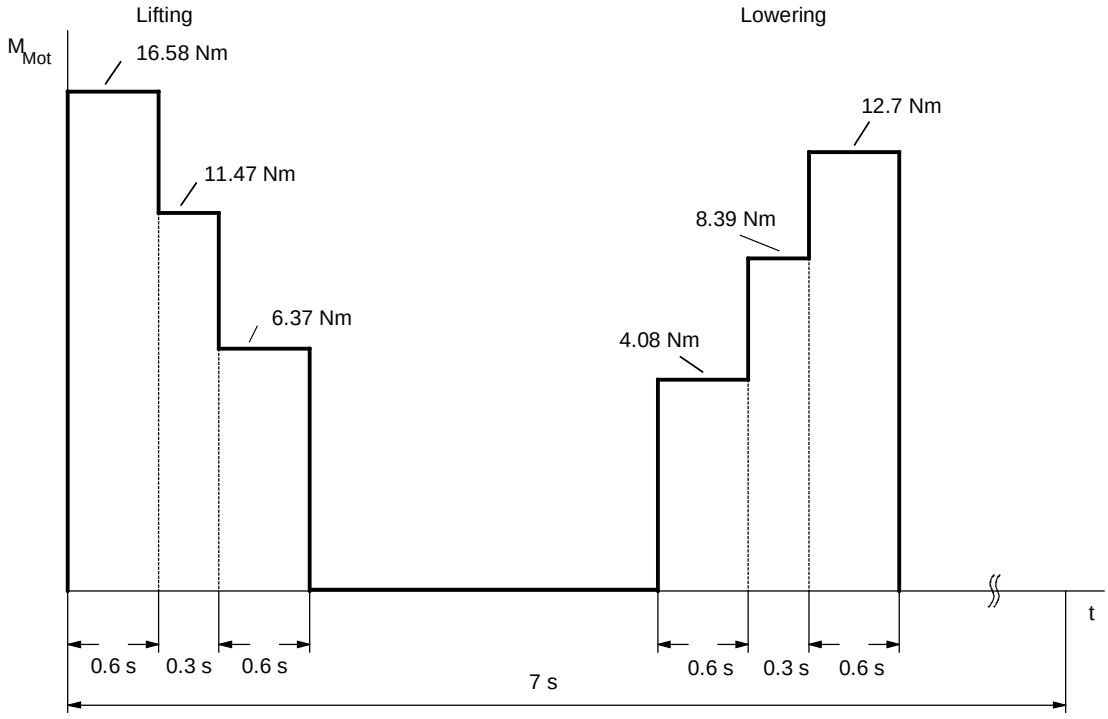

Fig. 11-20 Torque characteristic for lifting and lowering

- The effective motor torque is obtained from the torque characteristic as follows:

$$M_{eff} = \sqrt{\frac{\sum M_{Mot\,i}^2 \cdot \Delta t_i}{T}}$$

$$= \sqrt{\frac{16.58^2 \cdot 0.6 + 1147^2 \cdot 0.3 + 6.37^2 \cdot 0.6 + 4.08^2 \cdot 0.6 + 8.39^2 \cdot 0.3 + 12.7^2 \cdot 0.6}{7}}$$

$$= 7.14\,\text{Nm}$$

- The speed-proportional travel curve is used to obtain the mean motor speed as follows:

$$n_{mean} = \frac{\sum \frac{|n_A + n_E|}{2} \cdot \Delta t_i}{T}$$

$$= \frac{(\frac{2865}{2} \cdot 0.6 + 2865 \cdot 0.3 + \frac{2865}{2} \cdot 0.6) \cdot 2}{7} = 736.7\,\text{rpm}$$

(due to the symmetry of the travel curve, the component for lifting is multiplied by 2)

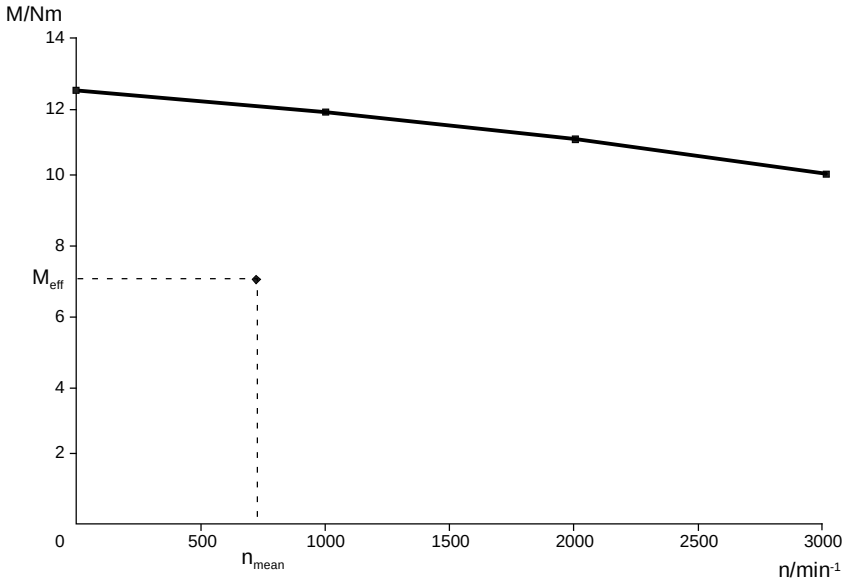

Fig. 11-21 S1 curve for the 1FT6082-8AF7

The calculated effective motor torque at n_{mean} is below the S1 curve. The motor is therefore suitable.

5. Selection of the inverter

The inverter is selected according to the maximum motor current and the mean motor current.

- Maximum motor current (the saturation influence here can be ignored)

$$I_{Mot\,max} \approx \frac{M_{Mot\,max}}{k_{Tn100}} = \frac{16.57}{118} = 14\ A$$

- Mean motor current, obtained from the magnitude of the torque characteristic

$$I_{Mot\,mean} \approx \frac{\sum \left| M_{Mot\,i} \right| \cdot \Delta t_i}{k_{Tn100} \cdot T}$$

$$= \frac{16.58 \cdot 0.6 + 1147 \cdot 0.3 + 6.37 \cdot 0.6 + 4.08 \cdot 0.6 + 8.39 \cdot 0.3 + 12.7 \cdot 0.6}{118 \cdot 7} = 3.6\ A$$

- A 6SE7021-0TP50 Compact PLUS inverter is necessary with I_{Un}=10.2 A. Since the acceleration and deceleration times are > 0.25 s, only 1.6 times the rated current can be utilized. Thus

$$I_{Mot\,max} = 14\ A \ < \ 16 \cdot I_{Un} = 16\ A$$

$$I_{Mot\,mean} = 3.6\ A \ < \ I_{Un} = 10.2\ A$$

6. Determination of the DC link currents

The maximum DC link current occurring during motor operation and the mean DC link current for the inverter have to be determined for later rating of the rectifier unit. To do this, all power outputs of the motor within the travel curve first have to be calculated.

- Lifting of the load, max. power output of motor during acceleration

$$P_{\text{Mot b up max}} = \frac{M_{\text{Mot b up}} \cdot n_{\text{Mot max}}}{9550} = \frac{16.58 \cdot 2865}{9550} = 4.97\ \text{kW}$$

- Lifting of the load, power output of motor during constant travel

$$P_{\text{Mot k up}} = \frac{M_{\text{Mot k up}} \cdot n_{\text{Mot max}}}{9550} = \frac{1147 \cdot 2865}{9550} = 3.44\ \text{kW}$$

- Lifting of the load, max. power output of motor during deceleration

$$P_{\text{Mot v up max}} = \frac{M_{\text{Mot v up}} \cdot n_{\text{Mot max}}}{9550} = \frac{6.37 \cdot 2865}{9550} = 191\text{kW}$$

- Lowering of the load, max. power output of motor during acceleration

$$P_{\text{Mot b down max}} = \frac{M_{\text{Mot b down}} \cdot n_{\text{Mot max}}}{9550} = \frac{4.08 \cdot (-2865)}{9550} = -122\ \text{kW}$$

- Lowering of the load, power output of motor during constant travel

$$P_{\text{Mot k down}} = \frac{M_{\text{Mot k down}} \cdot n_{\text{Mot max}}}{9550} = \frac{8.39 \cdot (-2865)}{9550} = -2.52\ \text{kW}$$

- Lowering of the load, max. power output of motor during deceleration

$$P_{\text{Mot v down max}} = \frac{M_{\text{Mot v down}} \cdot n_{\text{Mot max}}}{9550} = \frac{12.7 \cdot (-2865)}{9550} = -3.81\text{kW}$$

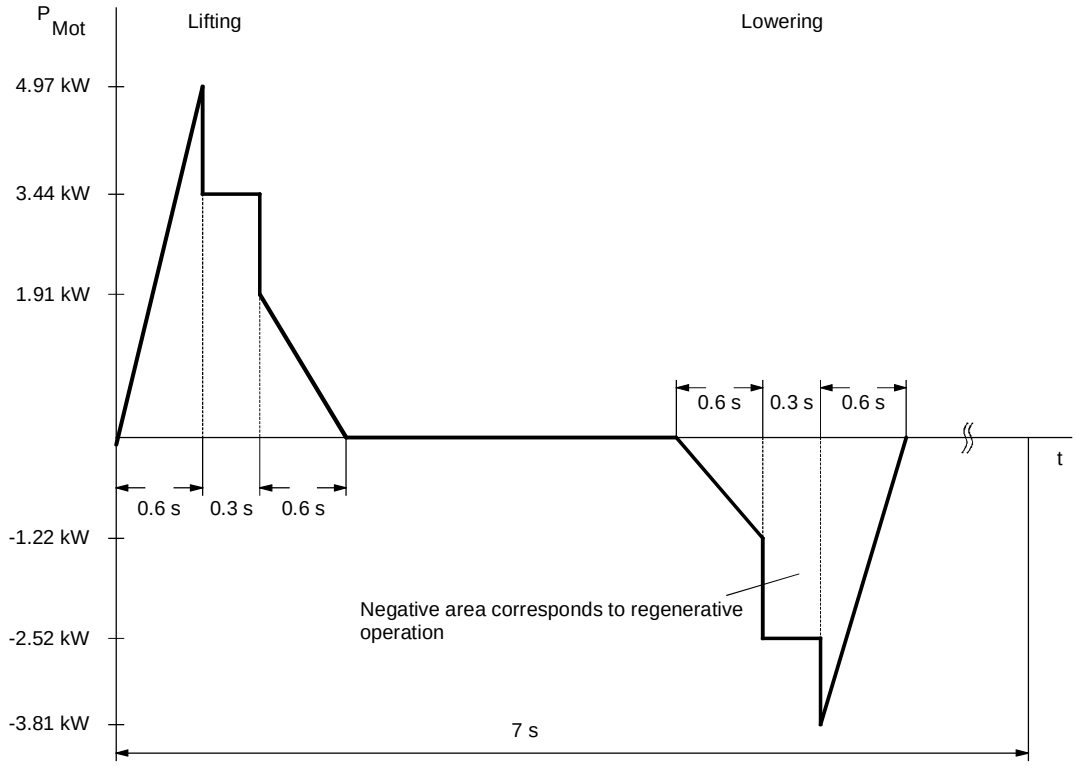

Fig. 11-22 Curve of motor power output for lifting and lowering

- The maximum DC link current during motor operation during acceleration upwards is as follows:

$$I_{Link\ Inv\ max} = \frac{P_{Mot\ max}}{\eta_{Mot} \cdot \eta_{Inv} \cdot 135 \cdot U_{Line}}$$

$$= \frac{4970}{0.89 \cdot 0.98 \cdot 135 \cdot 400} = 10.55\ A$$

- The mean power output of the motor during motor operation is calculated from the positive characteristic of the motor power output as follows:

$$P_{Mot\ mean} = \frac{\sum \frac{P_{Mot\ A} + P_{Mot\ E}}{2} \cdot \Delta t_i}{T}$$

$$= \frac{\frac{1}{2} \cdot 4.97 \cdot 0.6 + 3.44 \cdot 0.3 + \frac{1}{2} \cdot 191 \cdot 0.6}{7} = 0.442\ kW$$

- The mean DC link current is therefore:

$$I_{Link\ mean} = \frac{P_{Mot\ mean}}{\eta_{Mot} \cdot \eta_{Inv} \cdot 135 \cdot U_{Line}}$$

$$= \frac{442}{0.89 \cdot 0.98 \cdot 135 \cdot 400} = 0.938\ A$$

7. Determination of braking power

The maximum braking power and the mean braking power have to be determined for later rating of the braking resistors. The maximum motor power output during braking has already been calculated in 6.

- The maximum braking power is thus:

$$P_{br\,max} = P_{Mot\,v\,down\,max} \cdot \eta_{Mot} \cdot \eta_{Inv} = -3.81 \cdot 0.89 \cdot 0.98 = -3.32\,kW$$

- The mean braking power is obtained from the negative characteristic of the motor power output as follows:

$$P_{br\,mean} = \frac{\sum \frac{P_{Mot\,v\,A} + P_{Mot\,v\,E}}{2} \cdot \Delta t_i}{T} \cdot \eta_{Mot} \cdot \eta_{Inv}$$

$$= \frac{\frac{1}{2} \cdot (-122) \cdot 0.6 + (-2.52) \cdot 0.3 + \frac{1}{2} \cdot (-3.81) \cdot 0.6}{7} \cdot 0.89 \cdot 0.98 = -0.28\,kW$$

11.9.4 Selection of the rectifier unit

Now that the drives of the x, y and z axes have been calculated, the rectifier unit can be selected. Here, it is assumed that the drives of the x and z axes can operate simultaneously.

- The maximum DC link currents of the two inverters during motor operation are therefore added together.

$$I_{Link\,Rect\,max} = \sum I_{Link\,Inv\,max} = 14.56\,A + 10.55\,A = 25.11\,A$$

- In order to determine the mean value of the DC link current, the mean values of the two inverters are added together.

$$I_{Link\,Rect\,mean} = \sum I_{Link\,Inv\,mean} = 0.95\,A + 0.938\,A = 189\,A$$

- The 15 kW rectifier unit, 6SE7024-1EP85-0AA0, with $I_{ZK\,n}$=41 A is sufficient.

$$I_{Link\,Rect\,max} = 25.11\,A \;<\; 16 \cdot I_{Link\,n} = 65.6\,A$$

$$I_{Link\,Rect\,mean} = 189\,A \;<\; I_{Link\,n} = 41\,A$$

11.9.5 Selection of the braking resistor

The braking resistor is connected to the chopper of the rectifier unit. During rating, it is assumed that the drives of the x and z axes can brake simultaneously.

- The maximum braking power levels of the two inverters are therefore added together.

  $P_{br\,max} = \sum P_{br\,Inv} = -4.08\,kW - 3.32\,kW = -7.4\,kW$

- For the mean braking power, the individual mean values are also added together.

  $P_{br\,mean} = \sum P_{br\,Inv\,mean} = -0.146\,kW - 0.28\,kW = -0.426\,kW$

- A 6SE7018-0ES87-2DC0 braking resistor of 80 Ω with P_{20} = 5 kW is necessary.

  $P_{br\,max} = 7.4\,kW \;<\; 1.5 \cdot P_{20} = 7.5\,kW$

  $P_{br\,meen} = 0.426\,kW \;<\; P_{20} / 4.5 = 1.11\,kW$

Function diagrams

MASTERDRIVES MC function diagram - List of contents of the basic functions

Contents	Sheet
General	
Basic functions: List of contents	10
Free blocks and extension boards: List of contents	12
Explanation of the symbols	15
Visualization and normalization parameters	20
Free display parameters	30
Operator control	
PMU	50
OP1S operating display	60
CUMC terminals	
Analog inputs/outputs	80
Digital inputs/outputs	90
Energizing main contactor, external DC 24 V supply	91
"Safe Stop" function	92
Communications	
Receiving via USS/SCom1	100
Receiving via USS/SCom2	101
Transmitting via USS/SCom1	110
Transmitting via USS/SCom2	111
First CB/TB board, receiving	120
First CB/TB board, receiving	121
PROFIBUS CBP2, synchronizing	122
First CB/TB board, transmitting	125
Second CB/TB board, receiving	130
Second CB/TB board, receiving	131
Second CB/TB board, transmitting	135
SIMOLINK board: Configuration and diagnosis	140
SIMOLINK board: Synchronizing	141
SIMOLINK board 2: Configuration and diagnosis	145
SIMOLINK board: Receiving	150
SIMOLINK board: Transmitting	160
SIMOLINK board: Transmitting, special data	160a
Position setpoint extrapolation	170
Position setpoint extrapolator	171
Encoder interface DP V3 encoder 1 (motor enc.)	172a
Encoder interface DP V3 encoder 2 (external enc.)	172b

Contents	Sheet
Control words and status words	
Control word 1	180
Control word 2	190
Status word 1	200
Status word 2	210
Encoder evaluation	
Resolver evaluation, motor encoder (slot C)	230
Encoder evaluation, motor encoder (slot C)	240
Encoder evaluation, external encoder (not slot C)	242
Pulse enc. evaluation, motor encoder (slot C)	250
Pulse enc. evaluation, ext. encoder (not slot C)	255
Setpoint input, ext. encoder with SBP	256
Multiturn enc. eval., motor encod. (slot C)	260
Multiturn enc. eval., external encoder (not slot C)	270
Setpoint channel	
Fixed setpoints	290
Motorized potentiometer	300
Setpoint selection	310
Ramp-function generator	320
Position sensing and control	
Position fixed values and fixed setp. on the DSP	325
Motor encoder with mechanical gearing	327
Position sensing for motor encoder (slot C)	330
Config. of position sensing for mot. enc. (slot C)	331
Start position of absolute encoder with mechanical transmission ratio for a technology encoder	333
Position sensing for external encoder	335
Config. of position sensing for ext. enc. (not slot C)	336
Position control	340
Speed controller / torque limitation	
Speed controller	360
Speed filter	361
Torque limitation	370

Contents	Sheet
Current controller / V/f characteristic	
Current controller 1	390
Current controller 2	391
Adaptation of torque constant in the case of synchronous motors	393
Tr-Adaptation for asynchronous machines	394
Calculation of the acceleration torque	398
Friction characteristic	399
V/f characteristic	400
Gating unit / braking control	
Gating unit	420
Braking control	470
Diagnostics	
Messages	480
Protective functions, Part 1	490
Protective functions, Part 2 (motor)	491
Protective functions, Part 3 (blocking protection)	492
Protective functions, Part 4 (stall diagnosis V/f characteristic (P290 = 1))	493
Actual values	500
Actual speed values	500a
DC link voltage reduction	501
Fault memory	510
Hardware configuration Part 1	515
Hardware configuration Part 2	517
Status diagram	520
Functions	
Data sets	540
"Calculation of motor model" function	550

MASTERDRIVES MC function diagram - List of contents

of the free blocks

Contents	Sheet
Free blocks: List of contents	701
Setting and monitoring the sampling times and sampling sequence	702
General function blocks	
- Fixed setpoints	705
Fixed control bits	705
Connector/binector displays	705
- Fault/alarm trigger signals	710
- Voltage monitoring of electronics power supply	710
Connector/double-connector converter	710
Double-connector/connector converter	710
- Connector/binector converters	715
- Binector/connector converters	720
Numeric function blocks and control blocks	
- Adders	725
Subtracters	725
Sign inverters	725
- Multipliers	730
Dividers	730
- Multipliers/dividers	732
P-amplifiers	732
Shift multipliers/dividers	732
- Delay elements for analog signals	734
Integrators	734
Settable smoothing elements (high resolution)	734
- Absolute-value generators with smoothing	735
Limiters	735
- Limit-value monitors with and without smoothing	740
- Cam-contactor groups	745
- Analog-signal switches	750
Analog signal multiplexers and demultiplexers	750
Analog signal multiplexers	753
- Characteristic blocks	755
Dead zone	755
- Selection of minimum/maximum	760
Tracking/storage elements	760
Analog signal storages	760
Logic components	
- AND elements	765
OR elements	765
- Inverters	770
NAND elements	770
Exclusive OR elements	770
Digital signal changeover switches	770
- D flipflops	775
RS flipflops	775
- Timers	780
- Pulse generator	782
Sampling time changer	782
Sample & Hold	783
Complex blocks	
- Software counter	785
- Simple ramp function generator 1	786a
- Simple ramp function generator 2	786b
- 32-bit gear 1	786c
- 32-bit gear 2	786d
- Basic positioner	
Embedding in basic unit	788
Overview	788a
General notes	788b
Setpoint transfer and mode management	789a
Setup, positioning	789b
Correction value / homing	789c
- Ramp-function generator	790
- Simple ramp-function generator/ Virtual Master	791
- Technology controller	792
- SLE: SIMOLINK Encoder	793
- Additive relative offset angle setting	794
- Offset adder with limitation to ACL	794a
- Wobble generator	795
- PRBS (Pseudo Random Binary Sequence)	
Signal with trace	796
- Trace	797
- Connector-to-parameter converter	798

of the supplementary boards

Contents	Sheet
Supplementary boards: List of contents	Y00
Supplementary boards	
- EB1 No.1	
Analog inputs, combined digital inputs	Y01
Analog outputs	Y02
Digital inputs/outputs	Y03
- EB1 No.2	
Analog inputs, combined digital inputs	Y04
Analog outputs	Y05
Digital inputs/outputs	Y06
- EB2 No.1	
Analog and digital inputs/outputs	Y07
- EB2 No.2	
Analog and digital inputs/outputs	Y08
SCB expansions	
- SCB1/2	
Peer-to-peer receiving	Z01
Peer-to-peer transmitting	Z02
- SCB2	
USS receiving	Z05
USS transmitting	Z06
- SCB1 with SCI1	
Digital inputs slave 1	Z10
Digital inputs slave 2	Z11
Digital outputs slave 1	Z15
Digital outputs slave 2	Z16
Analog inputs slave 1	Z20
Analog inputs slave 2	Z21
Analog outputs slave 1	Z25
Analog outputs slave 2	Z26
- SCB1 with SCI2	
Digital inputs slave 1	Z30
Digital inputs slave 2	Z31
Digital outputs slave 1	Z35
Digital outputs slave 2	Z36

Explanation of the symbols used in the function diagram

Parameter

r007 n124 — Display parameters

P123 U123 — Setting parameters

U345 (50.00)
0 ...120 % — Setting parameter, not indexed (factory setting 50.00 %) Range: 0 ... 120 %

U345.3 — Setting parameter, indexed, index 3

U345.B — Setting parameter, belongs to BiCO data set (2 indices)

U355.F — Setting parameter, belongs to the function data set (4 indices)

Connectors/binectors

K0001 — Connector (freely interconnectable 16-bit signal; number representation: 100% corresponds to 4000 hex which corresponds to 16384dec)

KK0002 — Double connector (freely interconnectable 32-bit signal; number representation: 200% corresponds to 4000 0000hex which corresponds to 2 147 483 647dec)

B0000 — Binector (freely interconnectable digital signal) Output via dig. output [90], [91], [92]

P531 (326) K — Selection of any connector (factory setting: P531=326, i.e. connector K326 selected)

Place for entering the selected connector

P432 (546) KK — Selection of any double connector (factory setting: P432=546, i.e. connector KK546 selected)

P597 (1) B .01 B .02 B .03 — Selection of three binectors via indexed parameters (binector B0001 is the selected factory setting for all three outputs, i.e. fixed value "1", see below)

0 — B0000

1 — B0001

0% — K0000

100% (=16384) — K0001

200% (=32767) — K0002

-100% (=-16384) — K0003

-200% (=-32767) — K0004

0 — KK0000

100% (=1 073 741 824) — KK0001

200% (=2 147 483 647) — KK0002

-100% (=-1 073 741 824) — KK0003

-200% (=-2 147 483 647) — KK0004

Automatic conversion between connectors and double connectors

Converting a connector to a double connector

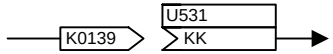

K0139 is converted to a double connector by entering it in the high word of the double connector and by setting its LOW word to zero.

Converting a double connector to a connector

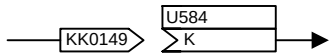

KK0149 is converted into a connector by entering its high word in the connector.

Cross references

[702.5] The signal comes from / goes to page 702, signal path 5 of the function diagram.

Indication of the block number and the sampling time for the free blocks

U953.14 = ___(xx) — The block has the number 314. The block can be activated via U953.14 and its sampling time selected (see sheet 702).

n959.14 = 7 — The block is permanently assigned to a sampling time.

Calculating time of the free blocks

{8 µs} — Blocks of the indicated type require a typical sampling time of approximately 8 ms (rough guide value).

If the total available calculating time is exceeded, the monitoring system shown on sheet 702 will respond.

General visualization parameters

- r001 Drive status → K0249
- r002 n(act) → KK0091
- r004 Output Amps → K0242
- r006 DC Bus Volts → K0240
- r007 Motor Torque → K0241
- r009 Motor Temperat.
- r069 SW Version
- r828 SW ID

r001 Drive Status

0: Converter
4: Config. boards
5: Drive setting
7: Fault
8: Switch-on inhibit
9: Ready for switching on
10: Precharging of the DC link
14: Operation
15: OFF 1 active
16: OFF 3 active
18: Mot ID at a standstill
21: Download

P060 Menu Select

0: User param
1: Parameter menu
2: FixedSet. menu
3: Quick param. menu
4: Board Config.
5: Drive setting
6: Download
7: Upread/Free access
8: Power section def.

Pxxx.B ⇒ BICO data-set parameter (2 indices)
Switchover by control-word bit 30 [190.2]

Active BICO DSet. r012

Pxxx.F ⇒ Function data-set parameter (4 indices)
Switchover by control-word bit 16/17 [190.2]

Active FuncDSet r013 (Function Data Set)

Normalization variables for closed-loop and open-loop control of the unit or the equipment

P350 (~):	Ref Amps	(0.0 ... 650 A)
P351 (500):	Ref Volts	(0 ... 5000 V)
P352 (50):	Ref Frequency	(0 ... 500 Hz)
P353.01 (3000):	Ref Speed	(0 ... 10000 1/min)
P353.02:	4 digits after decimal point	
	Reference speed	1 equiv. 0.0001 to 9999 equiv. 0.9999
P354 (~):	Ref Torque	(0 ... 6500 Nm)
	Ref Temp	256 °C
P355:	MachRefSpeed	(0 ... 10000 1/min)

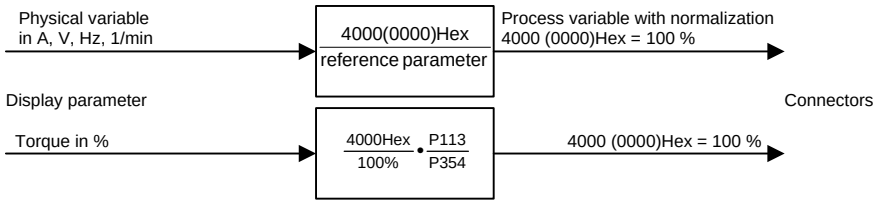

Notes:

1. Both the limit values of the control (e.g. speed, torque, current) and normalization of the internal and external setpoint and actual-value data are influenced.
2. When calculation of the motor model (P115) is selected, the values are pre-assigned to motor or converter rated quantities (only in converter state r001=5).
3. The listed parameter values can only be changed in the "Drive setting" menu (P060 = 5).

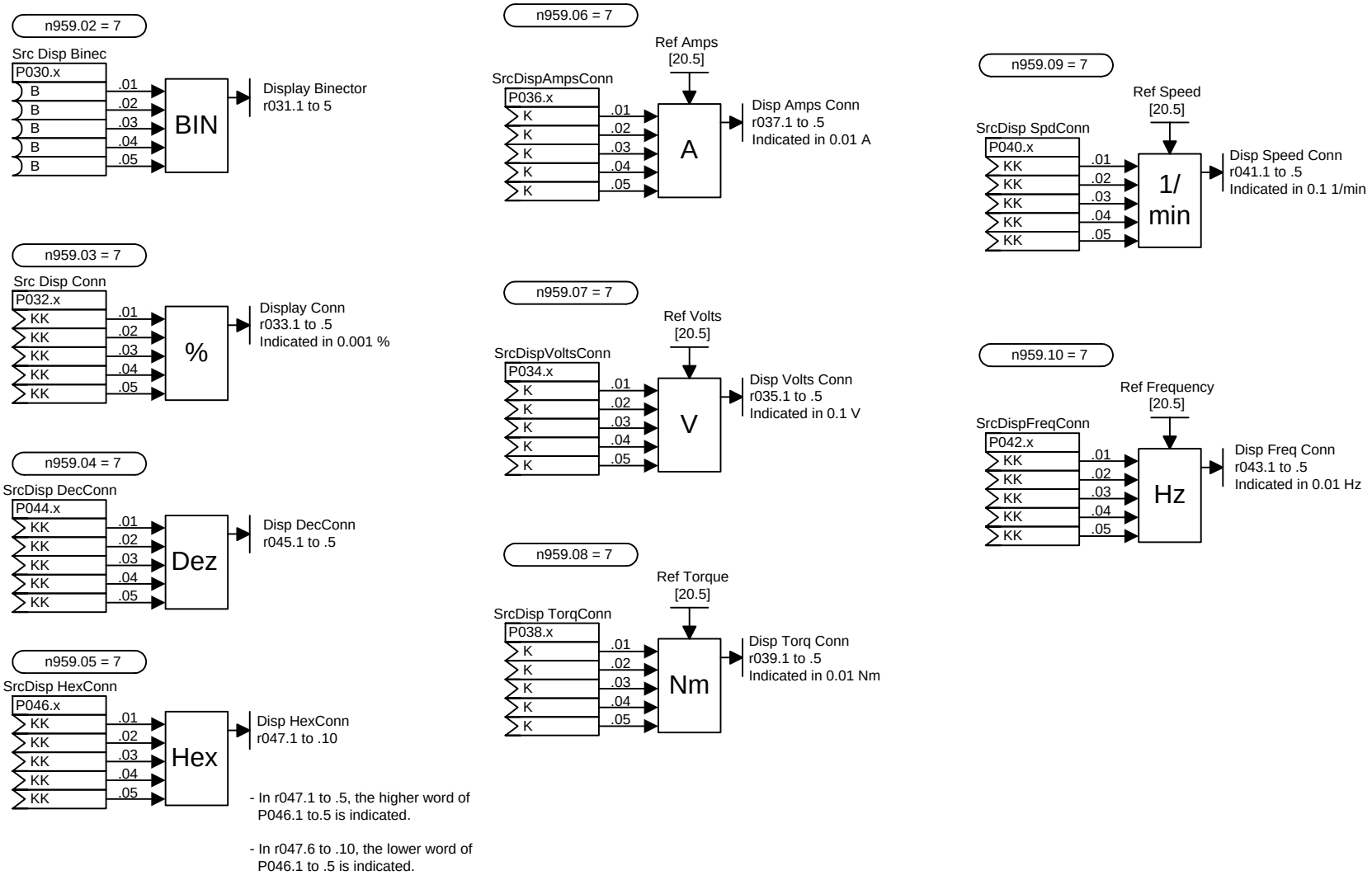
n959.02 = 7
Src Disp Binec
P030.x
B
B
B
B
B
.01
.02
.03
.04
.05
BIN
Display Binector
r031.1 to 5
n959.03 = 7
Src Disp Conn
P032.x
KK
KK
KK
KK
KK
.01
.02
.03
.04
.05
%
Display Conn
r033.1 to .5
Indicated in 0.001 %
n959.04 = 7
SrcDisp DecConn
P044.x
KK
KK
KK
KK
KK
.01
.02
.03
.04
.05
Dez
Disp DecConn
r045.1 to .5
n959.05 = 7
SrcDisp HexConn
P046.x
KK
KK
KK
KK
KK
.01
.02
.03
.04
.05
Hex
Disp HexConn
r047.1 to .10
- In r047.1 to .5, the higher word of P046.1 to.5 is indicated.
- In r047.6 to .10, the lower word of P046.1 to .5 is indicated.
n959.06 = 7
Ref Amps
[20.5]
SrcDispAmpsConn
P036.x
K
K
K
K
K
.01
.02
.03
.04
.05
A
Disp Amps Conn
r037.1 to .5
Indicated in 0.01 A
n959.07 = 7
Ref Volts
[20.5]
SrcDispVoltsConn
P034.x
K
K
K
K
K
.01
.02
.03
.04
.05
V
Disp Volts Conn
r035.1 to .5
Indicated in 0.1 V
n959.08 = 7
Ref Torque
[20.5]
SrcDisp TorqConn
P038.x
K
K
K
K
K
.01
.02
.03
.04
.05
Nm
Disp Torq Conn
r039.1 to .5
Indicated in 0.01 Nm
n959.09 = 7
Ref Speed
[20.5]
SrcDisp SpdConn
P040.x
KK
KK
KK
KK
KK
.01
.02
.03
.04
.05
1/
min
Disp Speed Conn
r041.1 to .5
Indicated in 0.1 1/min
n959.10 = 7
Ref Frequency
[20.5]
SrcDispFreqConn
P042.x
KK
KK
KK
KK
KK
.01
.02
.03
.04
.05
Hz
Disp Freq Conn
r043.1 to .5
Indicated in 0.01 Hz

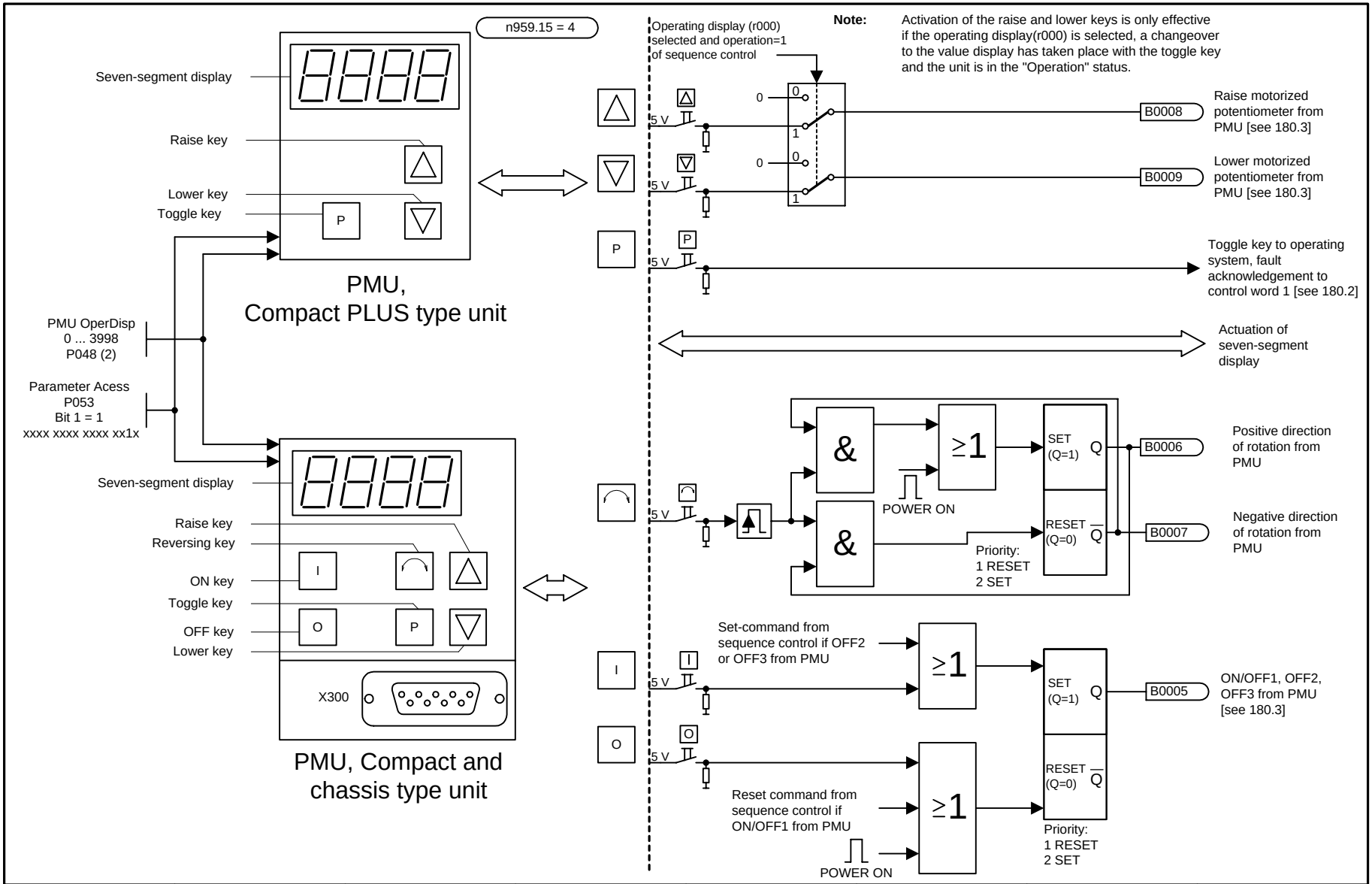

1	2	3	4	5	6	7	8
PMU				V1.6	fp_mc_050_e.vsd	Function diagram	- 50 -
Keypad, functionality and wiring					08.01.02	MASTERDRIVES MC	

n959.16 = 4

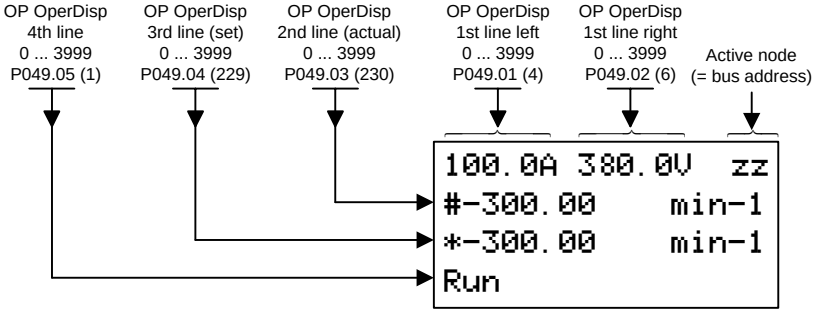

- A maximum of 6 characters (value + unit) are available for the display in P049.01 and P049.02 respectively.

- The 2nd line (P049.03) is for the display of actual values.
- The 3rd line (P049.04) is for the display of setpoints.
  Only setting parameters can be entered here.

The control commands are transferred via word 1 in the USS protocol.

I / 0	B2100 / B2101 / B2102	ON/OFF1 from OP1S / OFF2 from OP1S / OFF3 from OP1S
△	B2113	Raise MOP from OP1S
▽	B2114	Lower MOP from OP1S
↷	B2111 / B2112	Positive direction of rotation from OP1S / Negative direction of rotation from OP1S
Reset	B2107	Acknowledgement from OP1S
Jog	B2108	Inching from OP1S

Connection to control word. See [180.3]

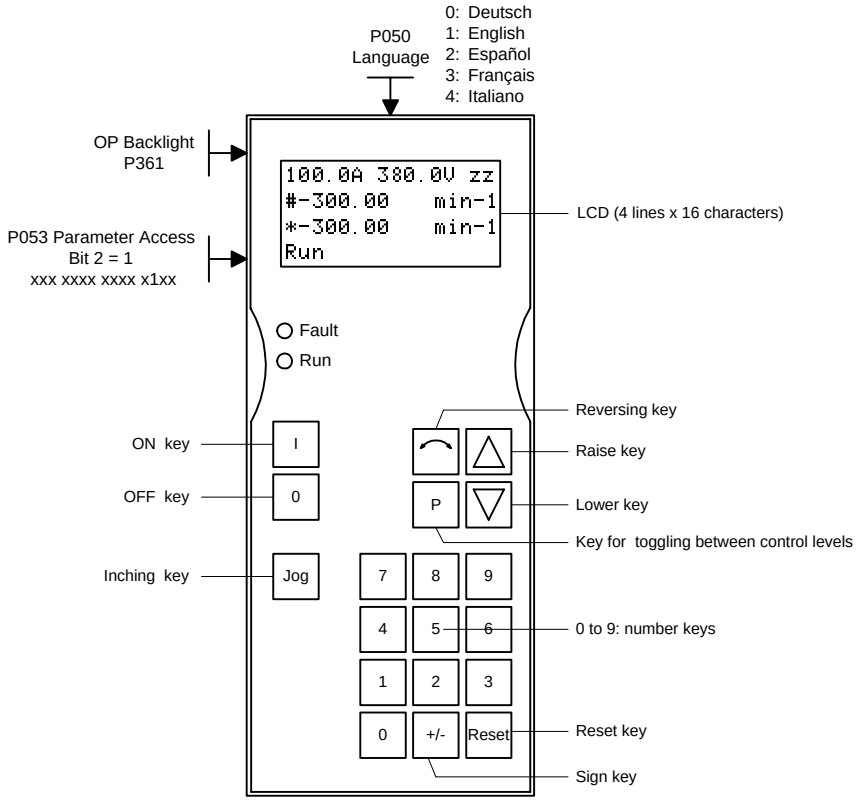

1	2	3	4	5	6	7	8
OP1S				V1.6	fp_mc_060_e.vsd	Function diagram	- 60 -
Operating display					08.01.02	MASTERDRIVES MC	

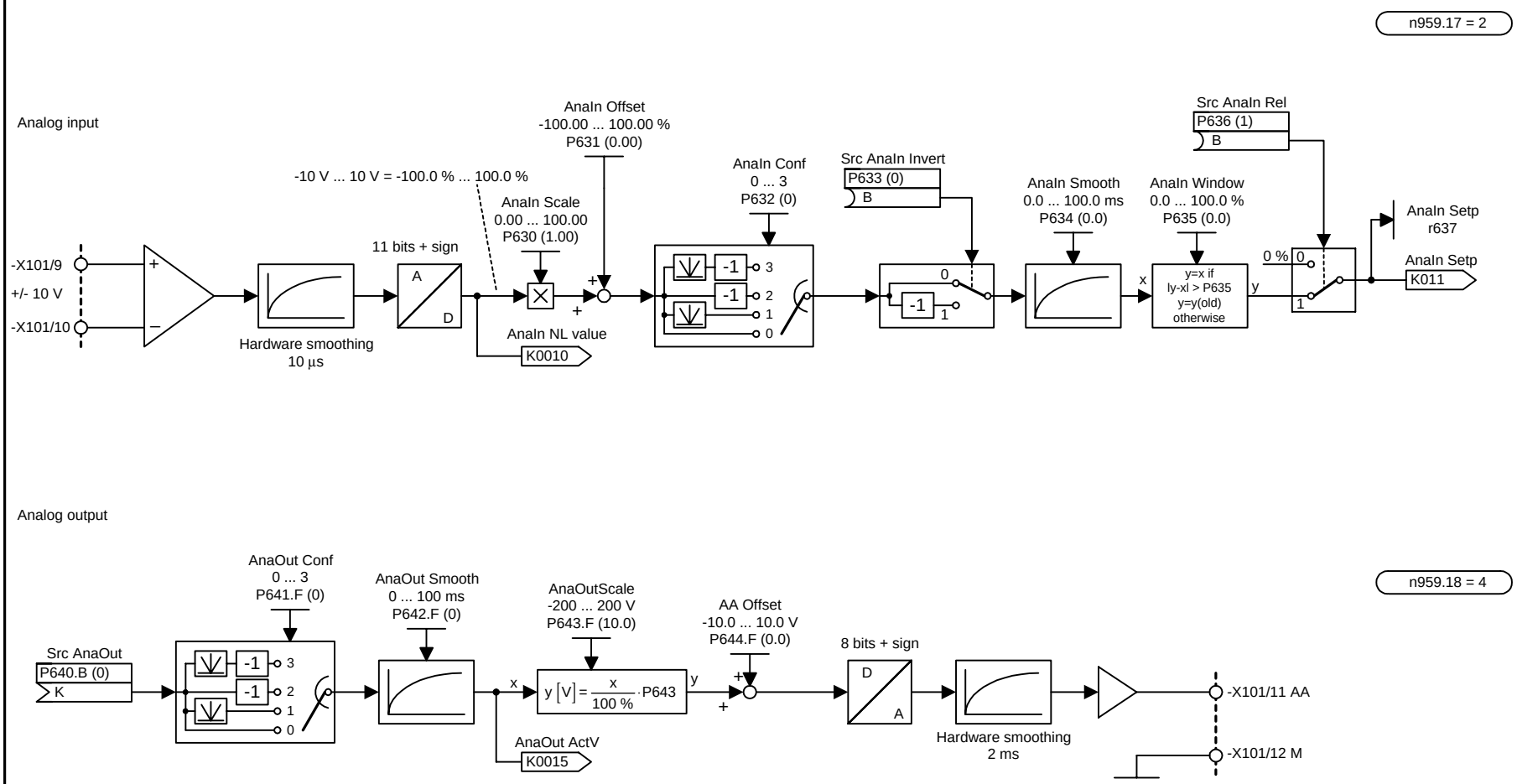

1	2	3	4	5	6	7	8
MC, CUMC terminals				V1.6	fp_mc_080_e.vsd	Function diagram	- 80 -
Analog inputs/outputs					08.01.02	MASTERDRIVES MC	

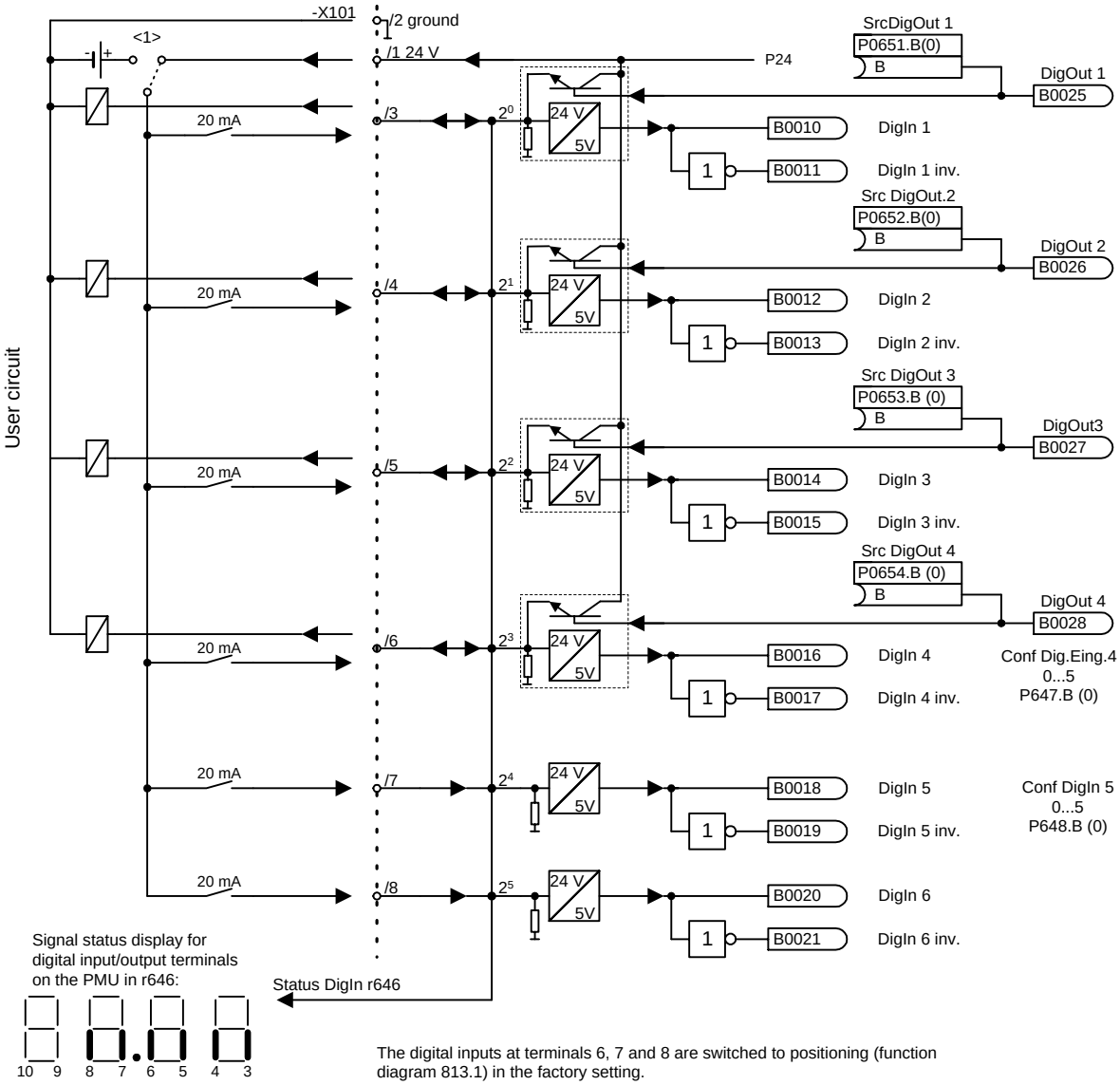

The digital inputs at terminals 6, 7 and 8 are switched to positioning (function diagram 813.1) in the factory setting.

Inputs U950.13 = ___(4)

Outputs U950.23 = ___(4)

Terminals -X101/3 to -X101/6 can be used as digital inputs or digital outputs.

If they are used as digital inputs, parameters P651.B, P652.B, P653.B and P654.B must be set to 0.

Terminals -X101/7 and -X101/8 can **only** be used as digital inputs.

<1> If the digital inputs are supplied by an external 24 V voltage source, this has to correspond to ground X101.2. The terminal X101.1 must not be linked to the external 24 V supply.

For correct functioning of P647, P648 = 1/2 the appropriate digital input in control word 1 [180.1]must be additionally connected as "OFF2".
At the digital inputs, levels below 3 V are recognized as low and levels above 13 V are recognized as high.

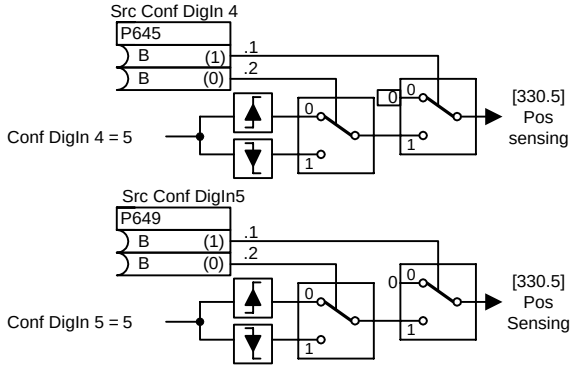

Meaning of P647 and P648:
0 Normal digital input
1 Immediate pulse disable (OFF2) with rising signal edge
2 Immediate pulse disable (OFF2) with falling signal edge
3 Adoption of position measured value with rising edge
4 Adoption of position measured value with falling edge
5 Configuration of position measured value per binector (P645,P649)

Compact PLUS type unit

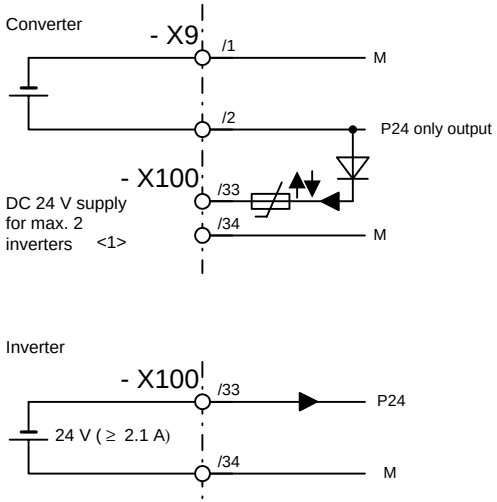

Compact type unit

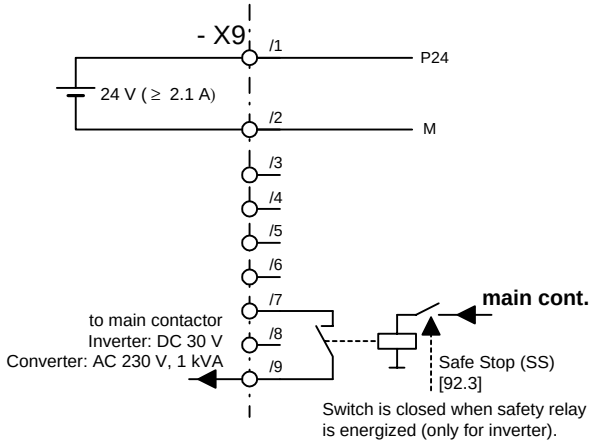

Chassis type unit

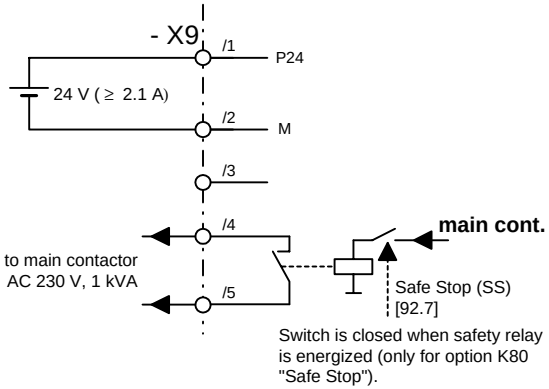

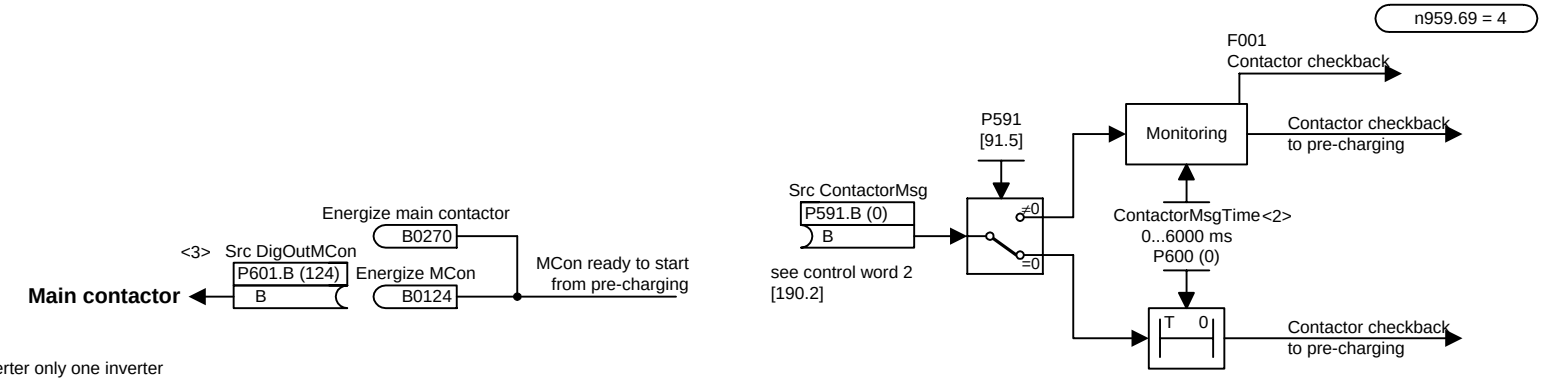

<1> For 0.75 kW converter only one inverter
<2> A value of approx. 500 ms is recommended as main contactor checkback time.
<3> not Compact PLUS

Compact type unit
(only inverter)

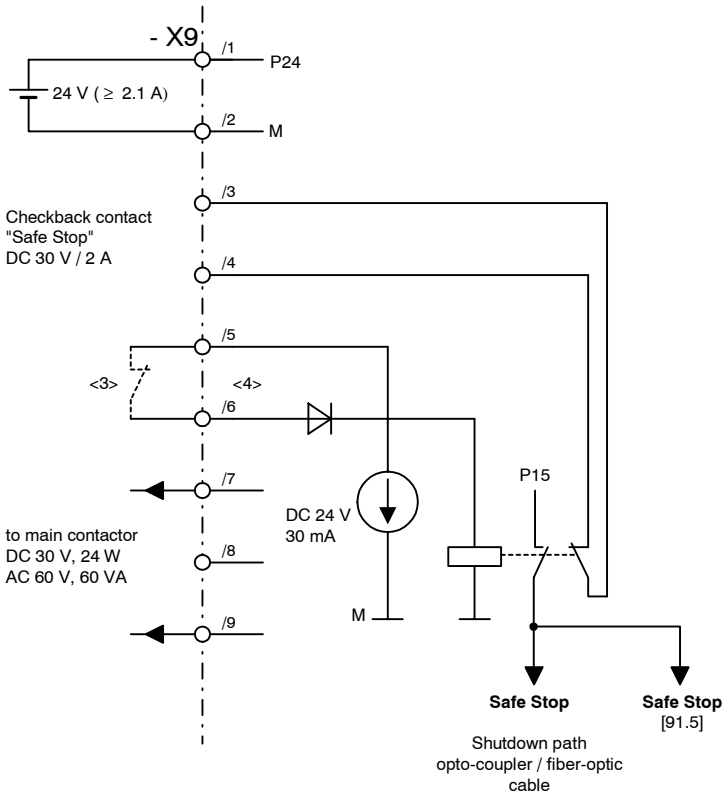

Compact PLUS type unit <1>
Chassis type unit <2>

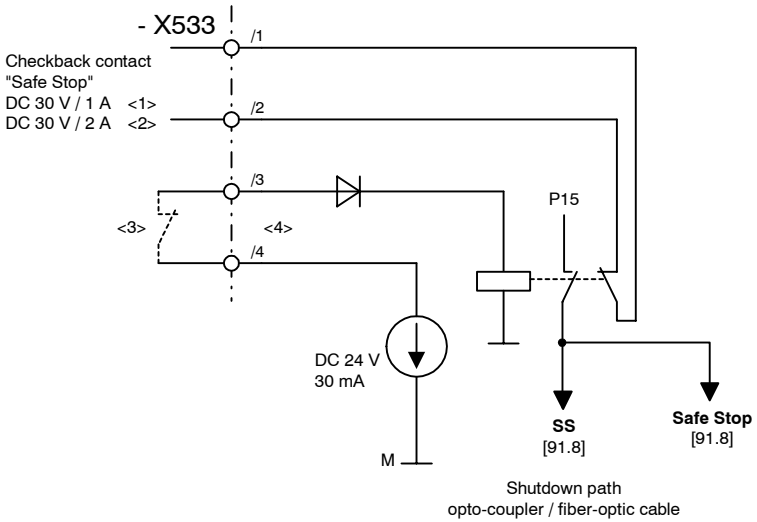

<3> Safety switch "Safe Stop" active when switch is open

<4> results in OFF2 [180.2]

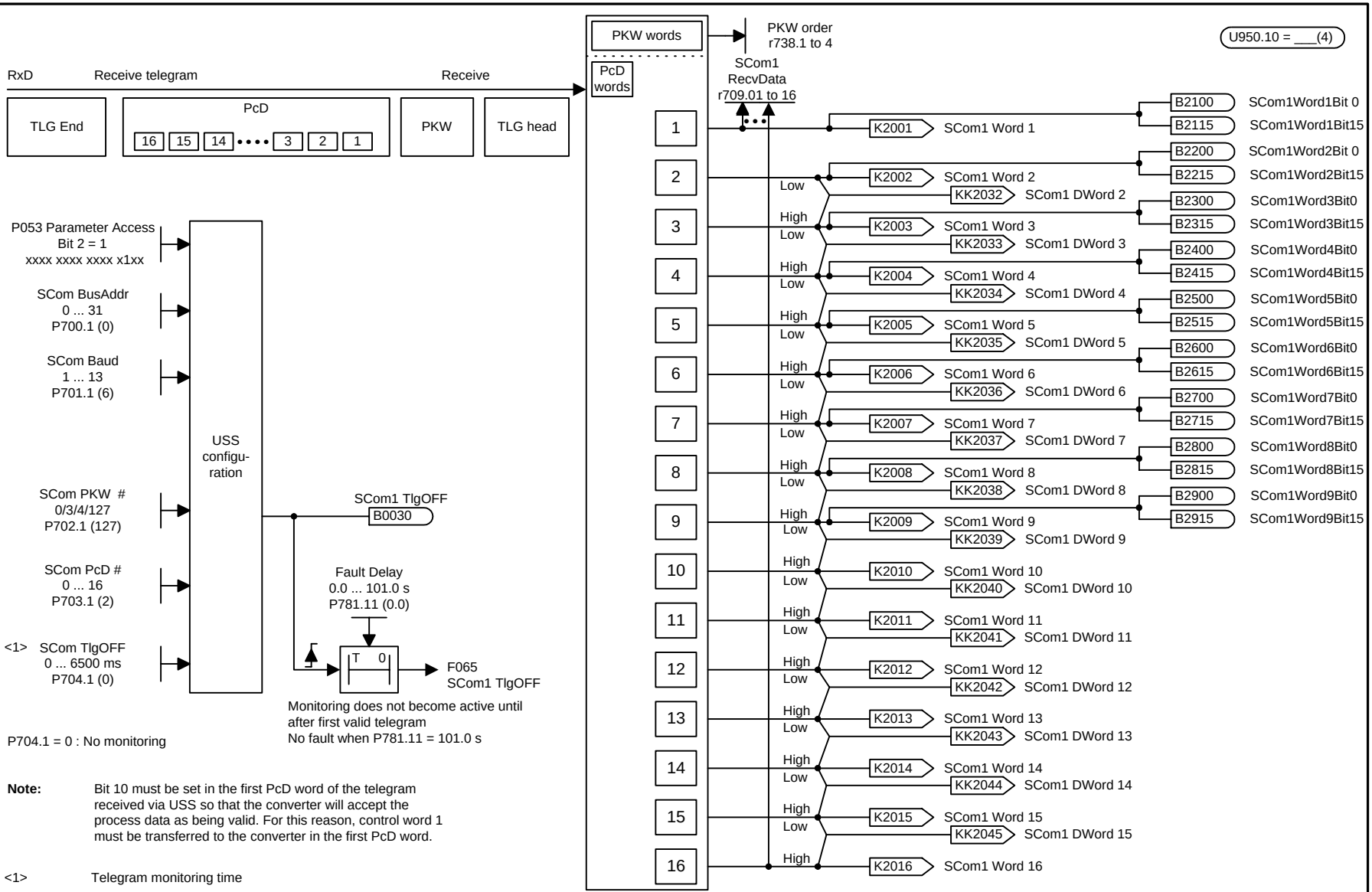

Note: Bit 10 must be set in the first PcD word of the telegram received via USS so that the converter will accept the process data as being valid. For this reason, control word 1 must be transferred to the converter in the first PcD word.

<1> Telegram monitoring time

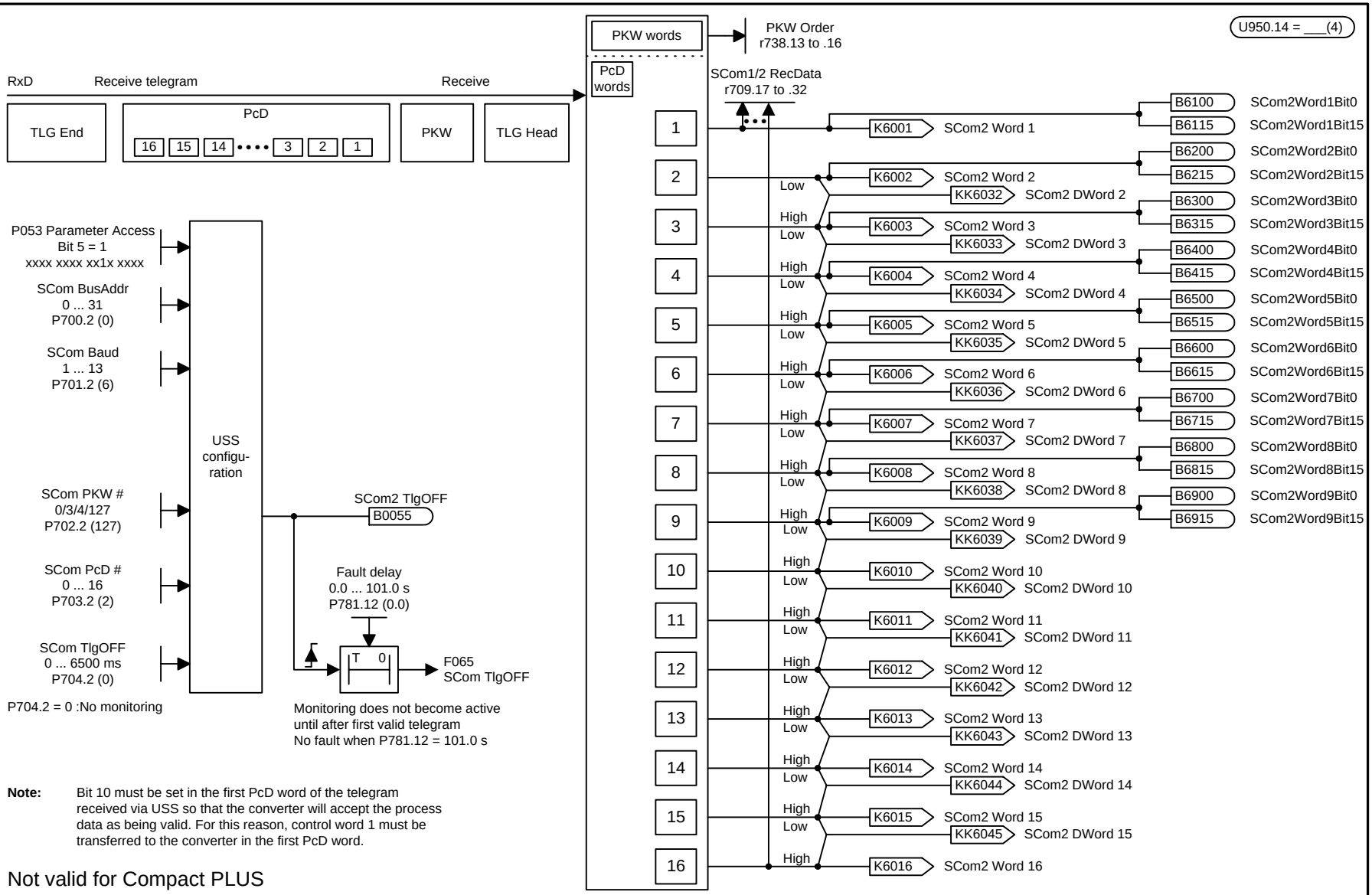

Note: Bit 10 must be set in the first PcD word of the telegram received via USS so that the converter will accept the process data as being valid. For this reason, control word 1 must be transferred to the converter in the first PcD word.

Not valid for Compact PLUS

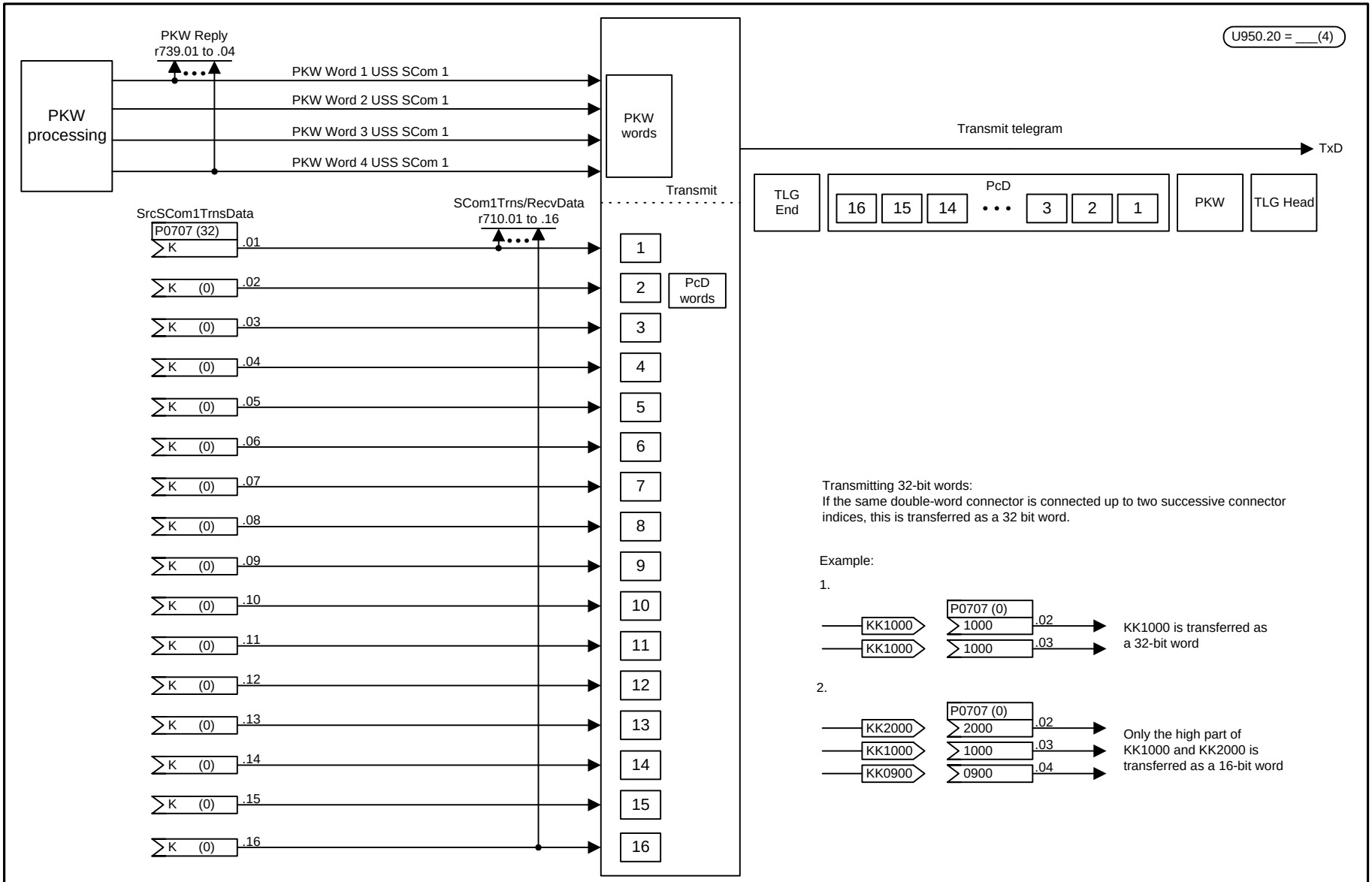
PKW Reply
r739.01 to .04
PKW processing
PKW Word 1 USS SCom 1
PKW Word 2 USS SCom 1
PKW Word 3 USS SCom 1
PKW Word 4 USS SCom 1
PKW words
Transmit
SrcSCom1TrnsData
P0707 (32)
SCom1Trns/RecvData
r710.01 to .16
PcD words
U950.20 = ___(4)
Transmit telegram
TxD
TLG End
PcD
16 15 14 • • • 3 2 1
PKW
TLG Head
Transmitting 32-bit words:
If the same double-word connector is connected up to two successive connector indices, this is transferred as a 32 bit word.
Example:
1.
KK1000
KK1000
P0707 (0)
1000
1000
.02
.03
KK1000 is transferred as a 32-bit word
2.
KK2000
KK1000
KK0900
P0707 (0)
2000
1000
0900
.02
.03
.04
Only the high part of KK1000 and KK2000 is transferred as a 16-bit word

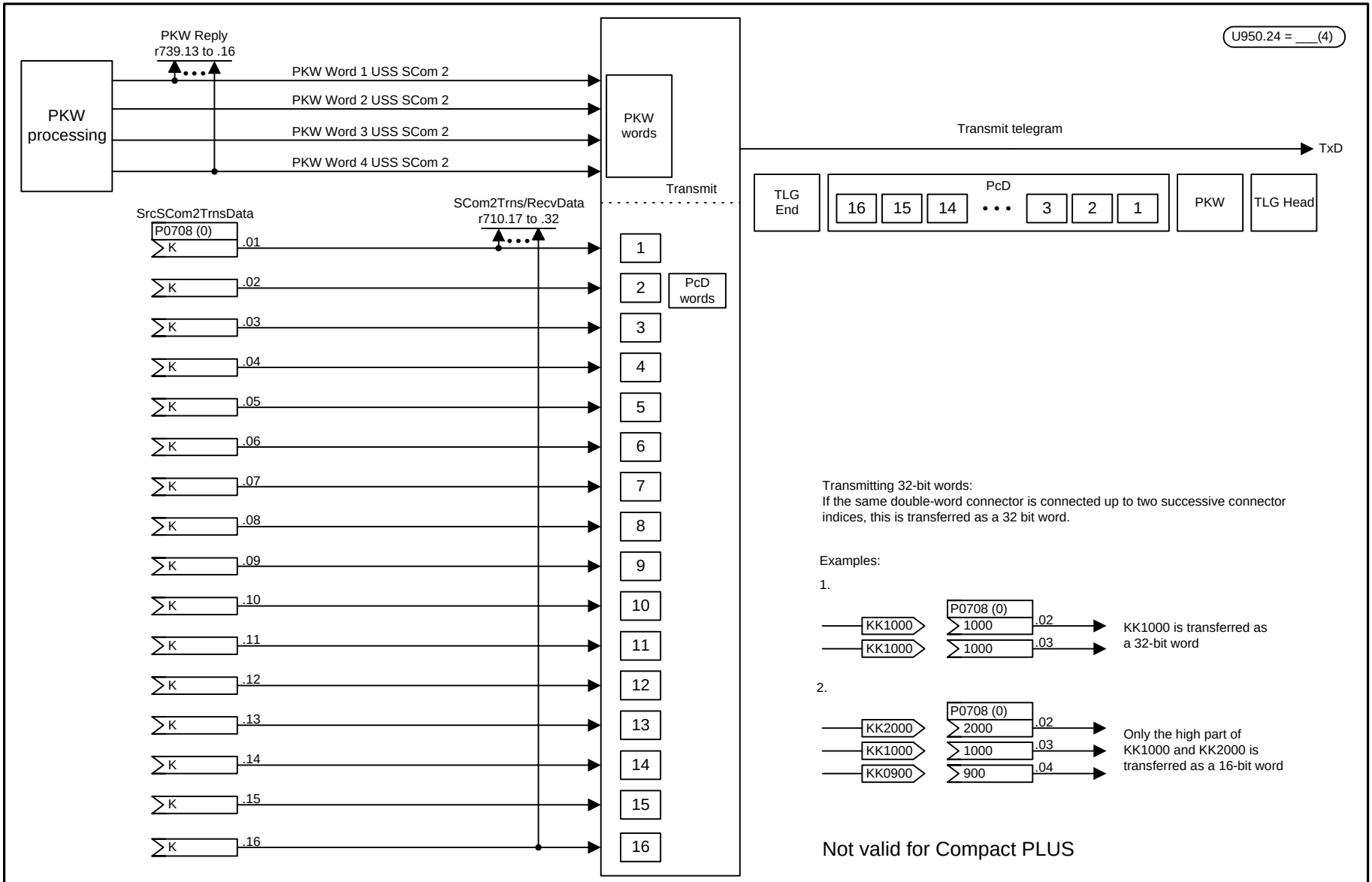
PKW Reply
r739.13 to .16
PKW processing
PKW Word 1 USS SCom 2
PKW Word 2 USS SCom 2
PKW Word 3 USS SCom 2
PKW Word 4 USS SCom 2
PKW words
Transmit
SrcSCom2TrnsData
P0708 (0)
SCom2Trns/RecvData
r710.17 to .32
PcD words
U950.24 = ___(4)
Transmit telegram
TxD
TLG End
PcD
16 15 14 • • • 3 2 1
PKW
TLG Head
Transmitting 32-bit words:
If the same double-word connector is connected up to two successive connector indices, this is transferred as a 32 bit word.
Examples:
1.
KK1000
KK1000
P0708 (0)
1000
1000
.02
.03
KK1000 is transferred as a 32-bit word
2.
KK2000
KK1000
KK0900
2000
1000
900
.04
Only the high part of KK1000 and KK2000 is transferred as a 16-bit word
Not valid for Compact PLUS

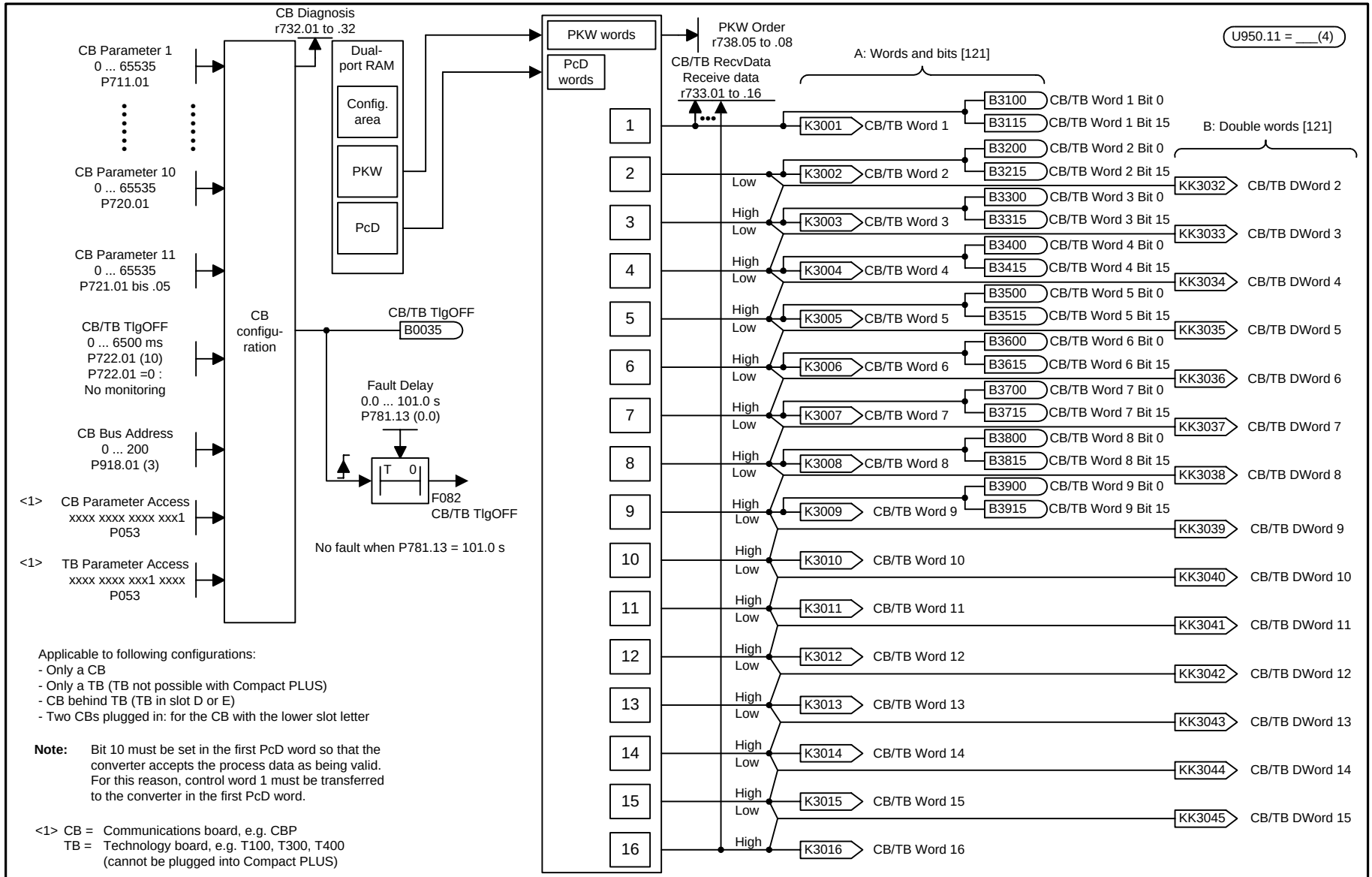

Applicable to following configurations:
- Only a CB
- Only a TB (TB not possible with Compact PLUS)
- CB behind TB (TB in slot D or E)
- Two CBs plugged in: for the CB with the lower slot letter

Note: Bit 10 must be set in the first PcD word so that the converter accepts the process data as being valid. For this reason, control word 1 must be transferred to the converter in the first PcD word.

<1> CB = Communications board, e.g. CBP
TB = Technology board, e.g. T100, T300, T400 (cannot be plugged into Compact PLUS)

Clock-synchronous mode:

For clock-synchronous mode:
Source: SYNC selection CBP2

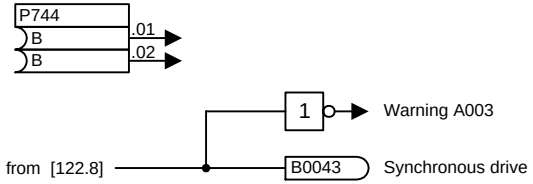

CBP2 in	Least sign.slot	Most sign. slot
P744.01	o	I
P744.02	I	I

Slot A is the least significant slot
Slot D is the most significant slot

Connector interlocking:

With firmware V1.50 and higher, either the word- (A in [120.6])
or the double word connectors (B in [120.7]) can be connected.

Example:
K3003 is connected ⇒ KK3032 and KK3033 may not be connected as well
KK3033 is connected ⇒ K3003 and K3004 may not be connected as well

The binectors are not included in interlocking (to ensure compatibility with previous configurations). Their meaning therefore varies depending on whether the associated word or double word is connected.

Modification of the initialization function from software version V1.3x to V1.40 and higher changes the converter response (and thereby conforms with the response of software versions V1.2x and lower) as follows:
If the electronics supply is deactivated for a converter in the "READY" state which is linked with an automation system via a fieldbus (PROFIBUS, CAN, DEVICE-NET or CC-Link), an error message will be issued for the converter in the automation system.
If, despite the error message, the automation system sends a control word (CtrlW1) with a valid authorization (bit 10 = 1) and an ON signal present (bit 0 = 1) to the converter, connection of the converter to the electronics supply may cause activation of the converter and direct changeover to the "ON" state.

U950.22 = ___(20)

Only allowed for PWE 2 or 20 (inactive).

n959.22 = 4

Fine synchronization

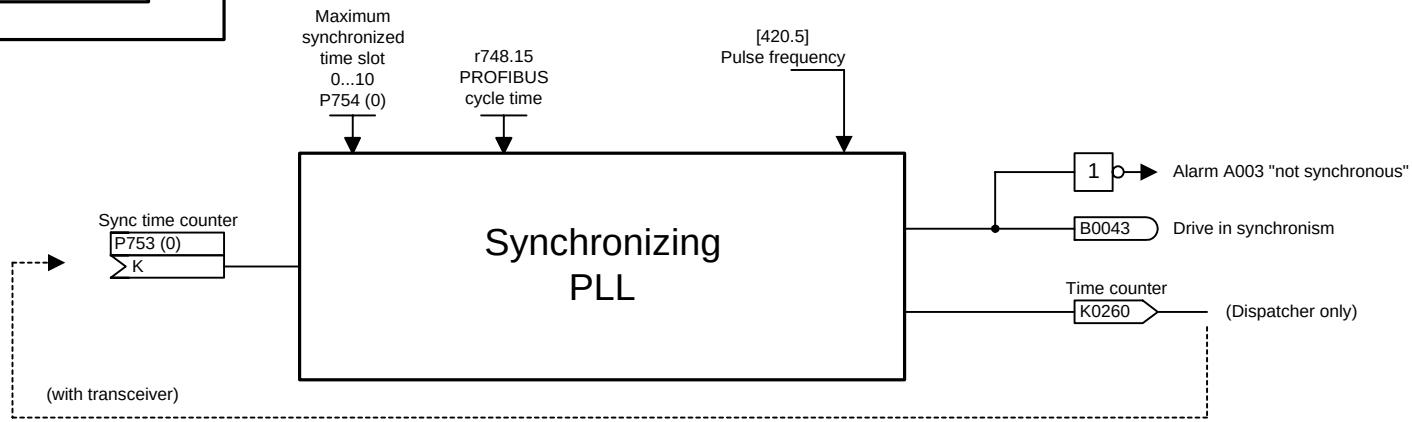

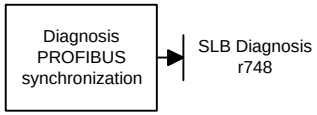

r748.001: Number of error-free synchronizing telegrams
.002: Unassigned
.003: Unassigned
.004: Unassigned
.005: Unassigned
.006: Unassigned
.007: Unassigned
.008: Unassigned
.009: Synchronism deviation
(65535 Synchronization not active)
permissible deviation between 65515 and 20
.010: Corrected pulse period in units of 100 ns
.011: T0 counter (0 with active synchronization)
.012: Internal
.013: Internal
.014: Time counter
.015: Implemented bus cycle time
.016: Internal

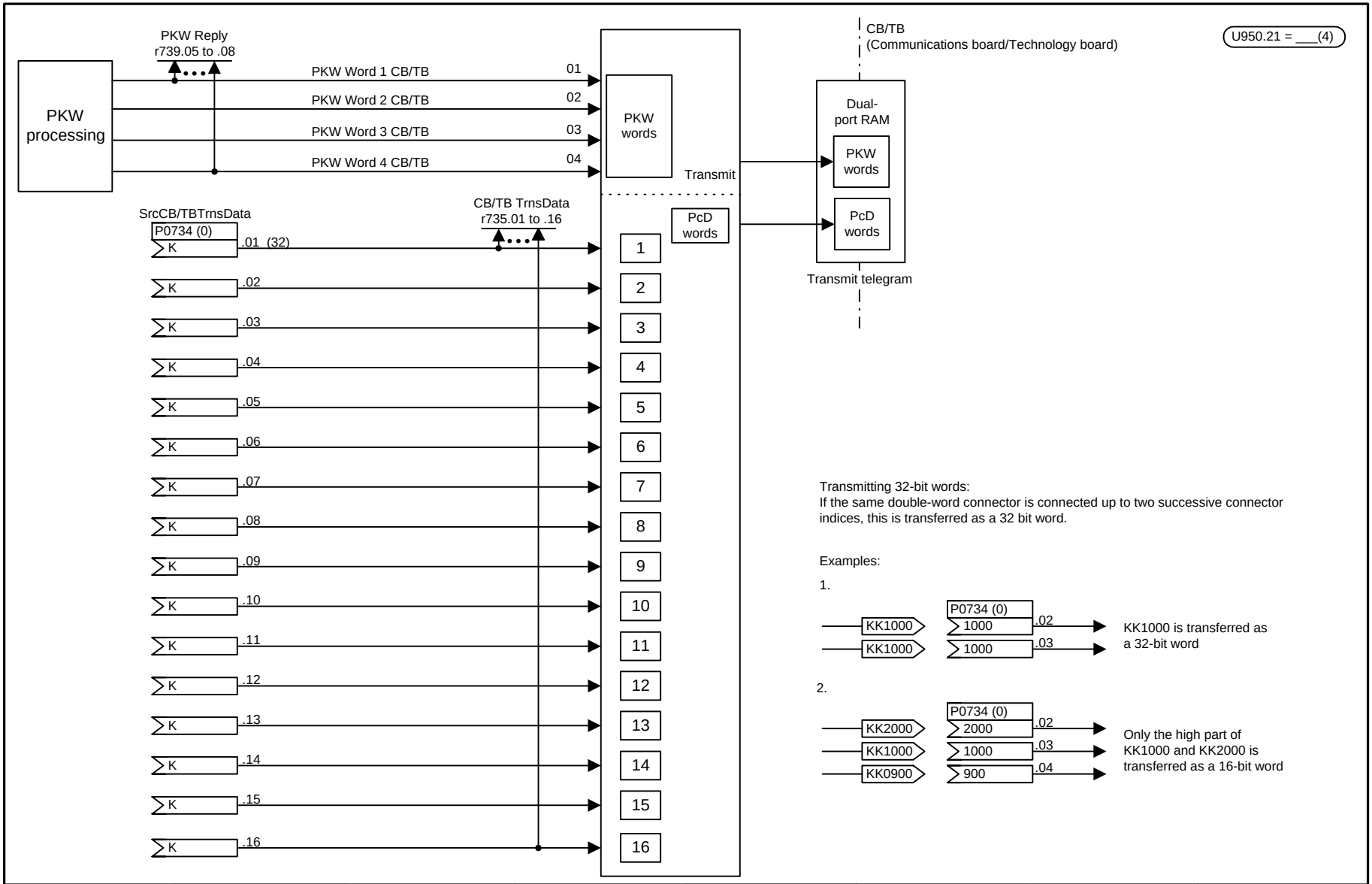

1	2	3	4	5	6	7	8
First CB/TB board (low slot letter)				V1.6	fp_mc_125_e.vsd	Function diagram	- 125 -
Transmitting					08.01.02	MASTERDRIVES MC	

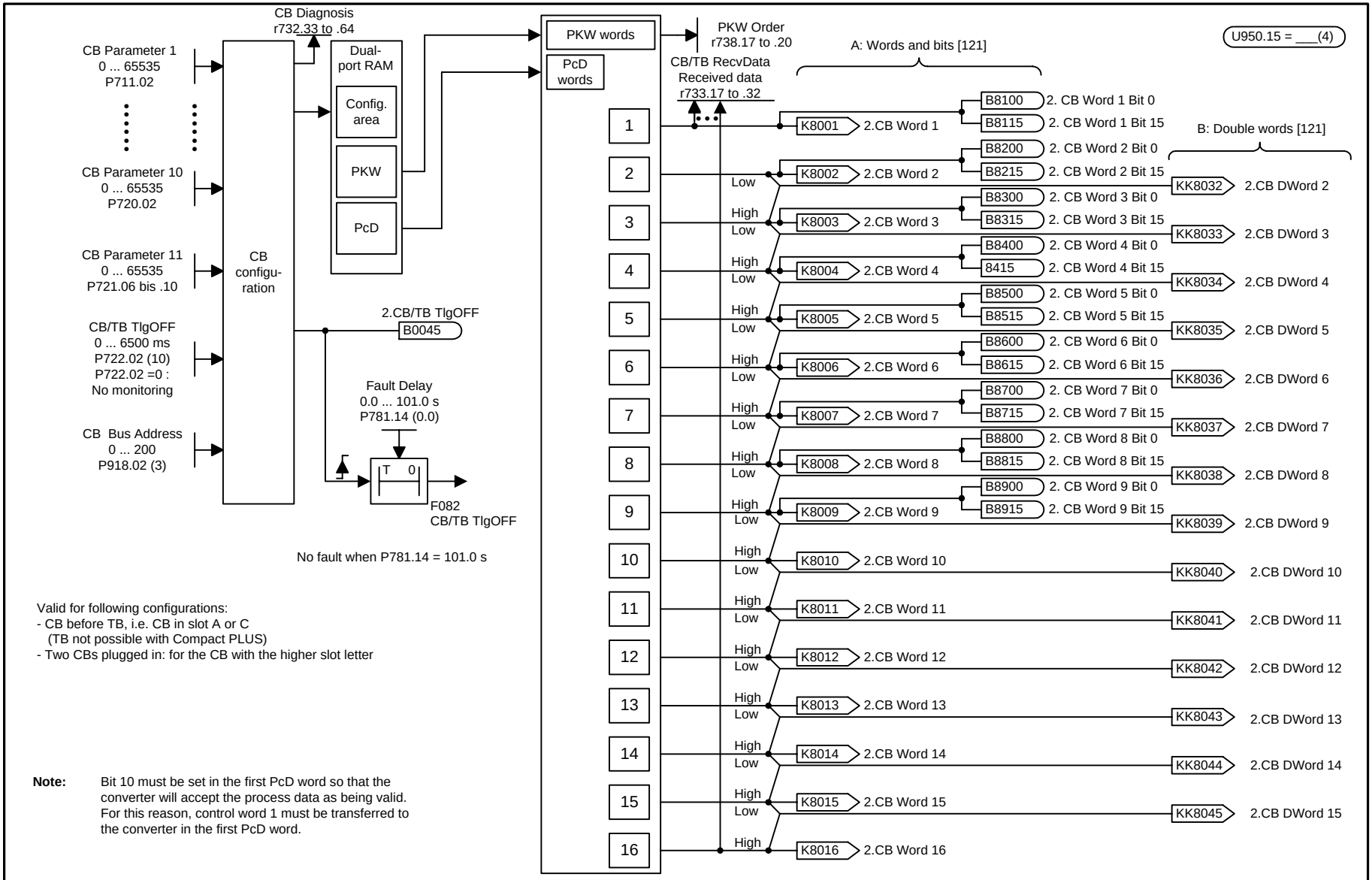

Valid for following configurations:
- CB before TB, i.e. CB in slot A or C
  (TB not possible with Compact PLUS)
- Two CBs plugged in: for the CB with the higher slot letter

Note: Bit 10 must be set in the first PcD word so that the converter will accept the process data as being valid. For this reason, control word 1 must be transferred to the converter in the first PcD word.

Clock-synchronous mode:

For clock-synchronous mode:
Source: SYNC selection CBP2

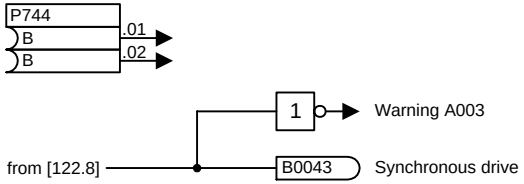

CBP2 in	Least sign. slot	Most sign. slot
P744.01	o	I
P744.02	I	I

Slot A is the least significant slot
Slot D is the most significant slot

Connector interlocking:

With firmware V1.50 and higher, either the word- (A in [130.6])
or the double word connectors (B in [130.7]) can be connected.

Example:
K8003 is connected ⇒ KK8032 and KK8033 may not be connected as well
KK8033 is connected ⇒ K8003 and K8004 may not be connected as well

The binectors are not included in interlocking (to ensure compatibility with previous configurations). Their meaning therefore varies depending on whether the associated word or double word is connected.

Modification of the initialization function from software version V1.3x to V1.40 and higher changes the converter response (and thereby conforms with the response of software versions V1.2x and lower) as follows:
If the electronics supply is deactivated for a converter in the "READY" state which is linked with an automation system via a fieldbus (PROFIBUS, CAN, DEVICE-NET or CC-Link), an error message will be issued for the converter in the automation system.
If, despite the error message, the automation system sends a control word (CtrlW1) with a valid authorization (bit 10 = 1) and an ON signal present (bit 0 = 1) to the converter, connection of the converter to the electronics supply may cause activation of the converter and direct changeover to the "ON" state.

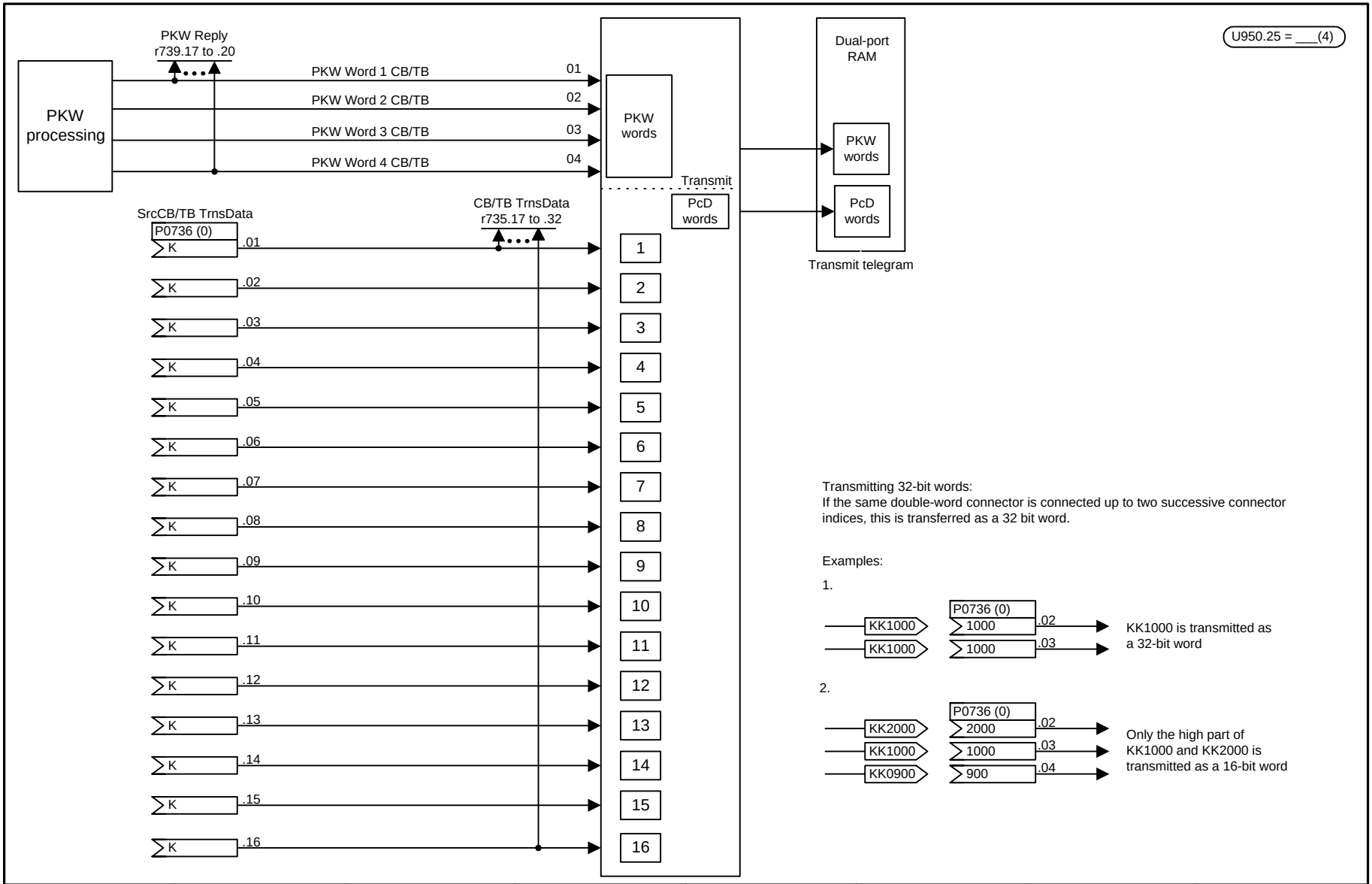
PKW Reply
r739.17 to .20
PKW processing
PKW Word 1 CB/TB
PKW Word 2 CB/TB
PKW Word 3 CB/TB
PKW Word 4 CB/TB
01
02
03
04
PKW words
Transmit
PcD words
Dual-port RAM
PKW words
PcD words
Transmit telegram
U950.25 = ___(4)
SrcCB/TB TrnsData
P0736 (0)
CB/TB TrnsData
r735.17 to .32
K
.01
.02
.03
.04
.05
.06
.07
.08
.09
.10
.11
.12
.13
.14
.15
.16
1
2
3
4
5
6
7
8
9
10
11
12
13
14
15
16
Transmitting 32-bit words:
If the same double-word connector is connected up to two successive connector indices, this is transferred as a 32 bit word.
Examples:
1.
KK1000
KK1000
P0736 (0)
1000
1000
.02
.03
KK1000 is transmitted as a 32-bit word
2.
KK2000
KK1000
KK0900
P0736 (0)
2000
1000
900
.02
.03
.04
Only the high part of KK1000 and KK2000 is transmitted as a 16-bit word

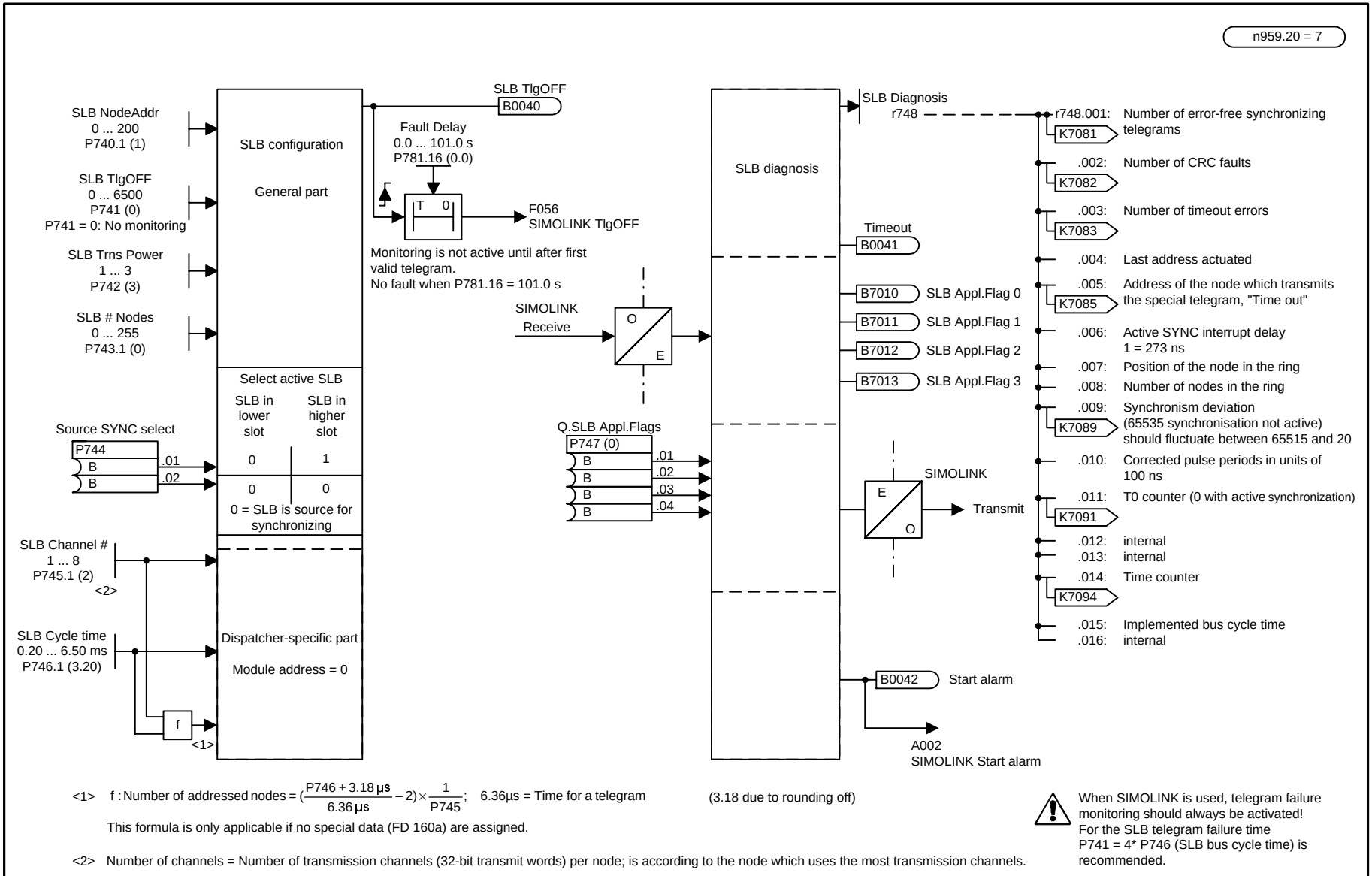

<1> f : Number of addressed nodes = $(\frac{P746 + 3.18\,\mu s}{6.36\,\mu s} - 2) \times \frac{1}{P745}$; 6.36µs = Time for a telegram

This formula is only applicable if no special data (FD 160a) are assigned.

(3.18 due to rounding off)

<2> Number of channels = Number of transmission channels (32-bit transmit words) per node; is according to the node which uses the most transmission channels.

When SIMOLINK is used, telegram failure monitoring should always be activated!
For the SLB telegram failure time P741 = 4* P746 (SLB bus cycle time) is recommended.

U950.22 = ___(20)

Only allowed for PWE 2 or 20 (inactive).

Fine synchronization SIMOLINK

Setting of P755:
Dead time compensation:
xxx0: No dead time compensation.
xxx1: Compensation of different dead times between units.
SLB switchover (between 2 SLBs):
xx0x: Switchover in operation disabled.
xx1x: Switchover in operation enabled.
Bus cycle time:
x0xx: Bus cycle time is corrected internally over all telegrams.
x1xx: Bus cycle time is exactly implemented.

n959.22 = 4

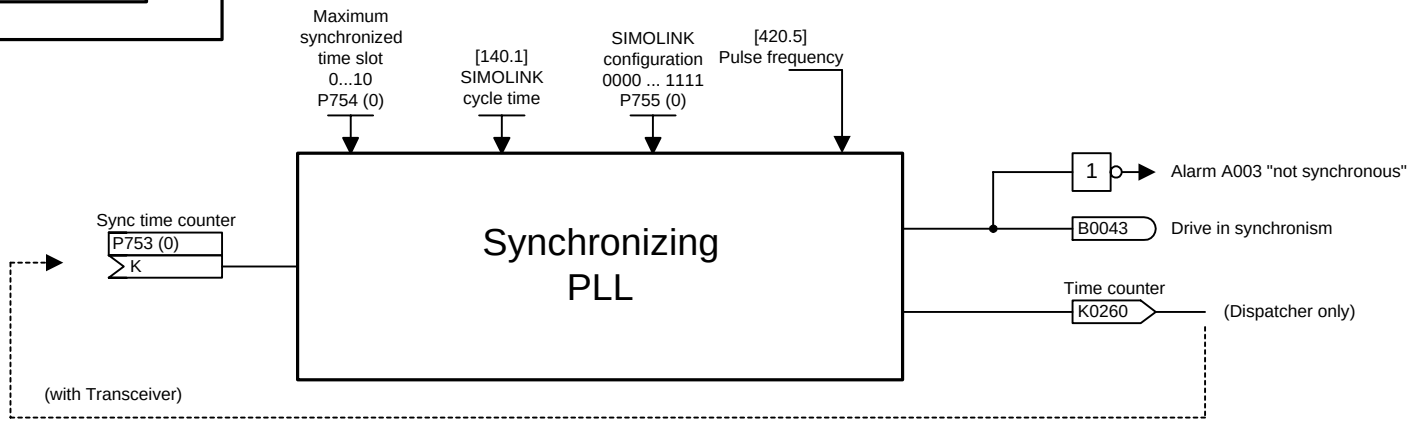

Synchronizing conditions :

$$P754 = 0: \text{ Cycle time } (P746) = \frac{1}{\text{Pulse frequency } (P340)} \cdot 2^{n} \quad \begin{pmatrix} n = \text{largest synchronized time slot} \\ n \geq 2 \end{pmatrix}$$

$$P754 \neq 0: \text{ Cycle time } (P746) = \frac{1}{\text{Pulse frequency } (P340)} \cdot 2^{m} \quad \begin{pmatrix} m = \text{smallest synchronized time slot} \\ m \geq 2 \\ P754 = \text{largest synchronized time slot} \end{pmatrix}$$

2. Inactive SIMOLINK Board

n959.20 = 7

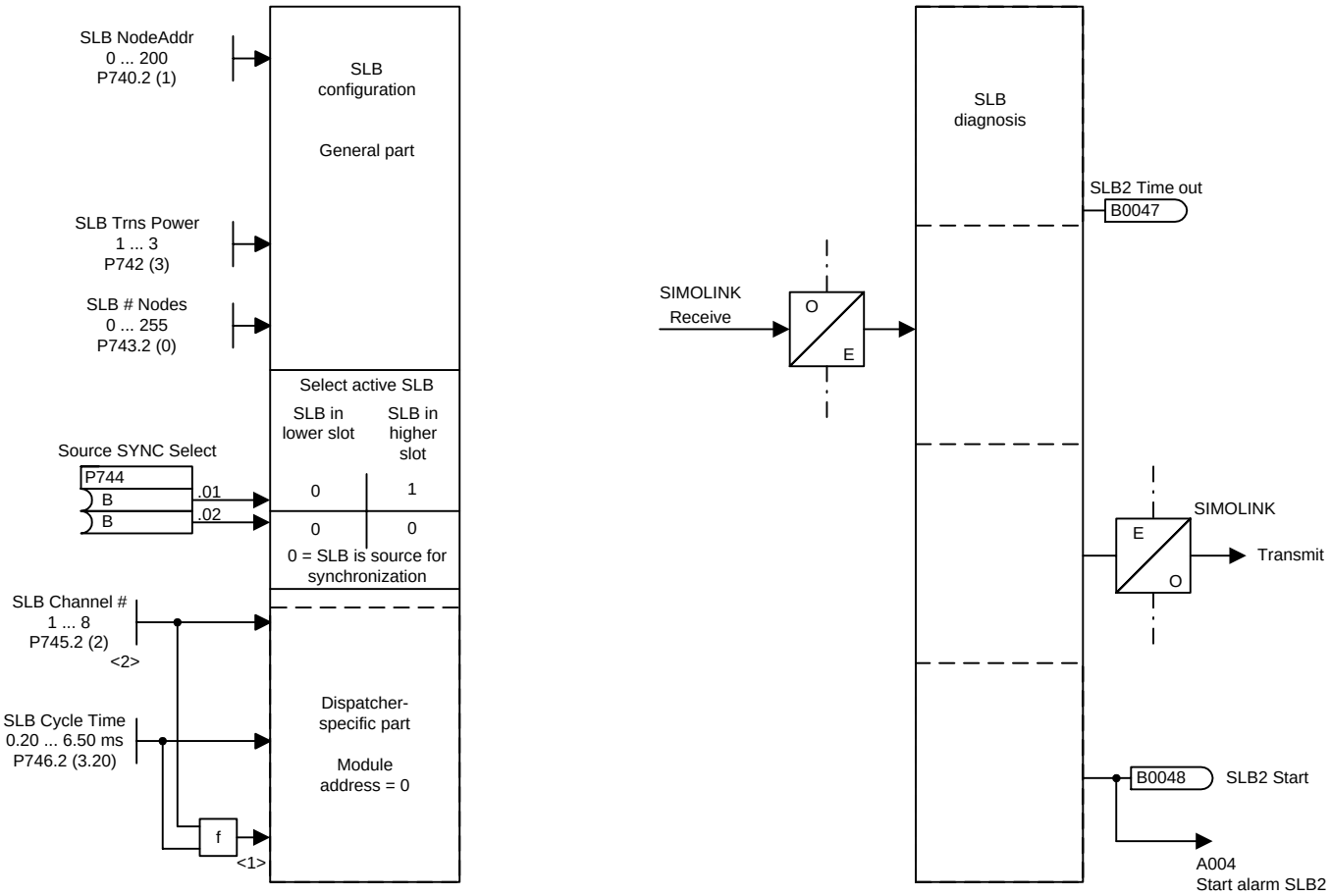

<1> f : Number of addressed nodes = $(\frac{P746 + 3.18\,\mu s}{6.36\,\mu s} - 2) \cdot \frac{1}{P745}$; 6.36µs = time for a telegram (3.18 due to rounding off)

This formula only applies if no special data (FD 160a) have been connected

<2> Number of channels = number of transmission channels (32 bit transmission words) per node, is according to the node which uses the most transmission channels.

When SIMOLINK is used, telegram failure monitoring should always be activated! For the SLB telegram failure time P741 = 4* P746 (SLB bus cycle time) is recommended.

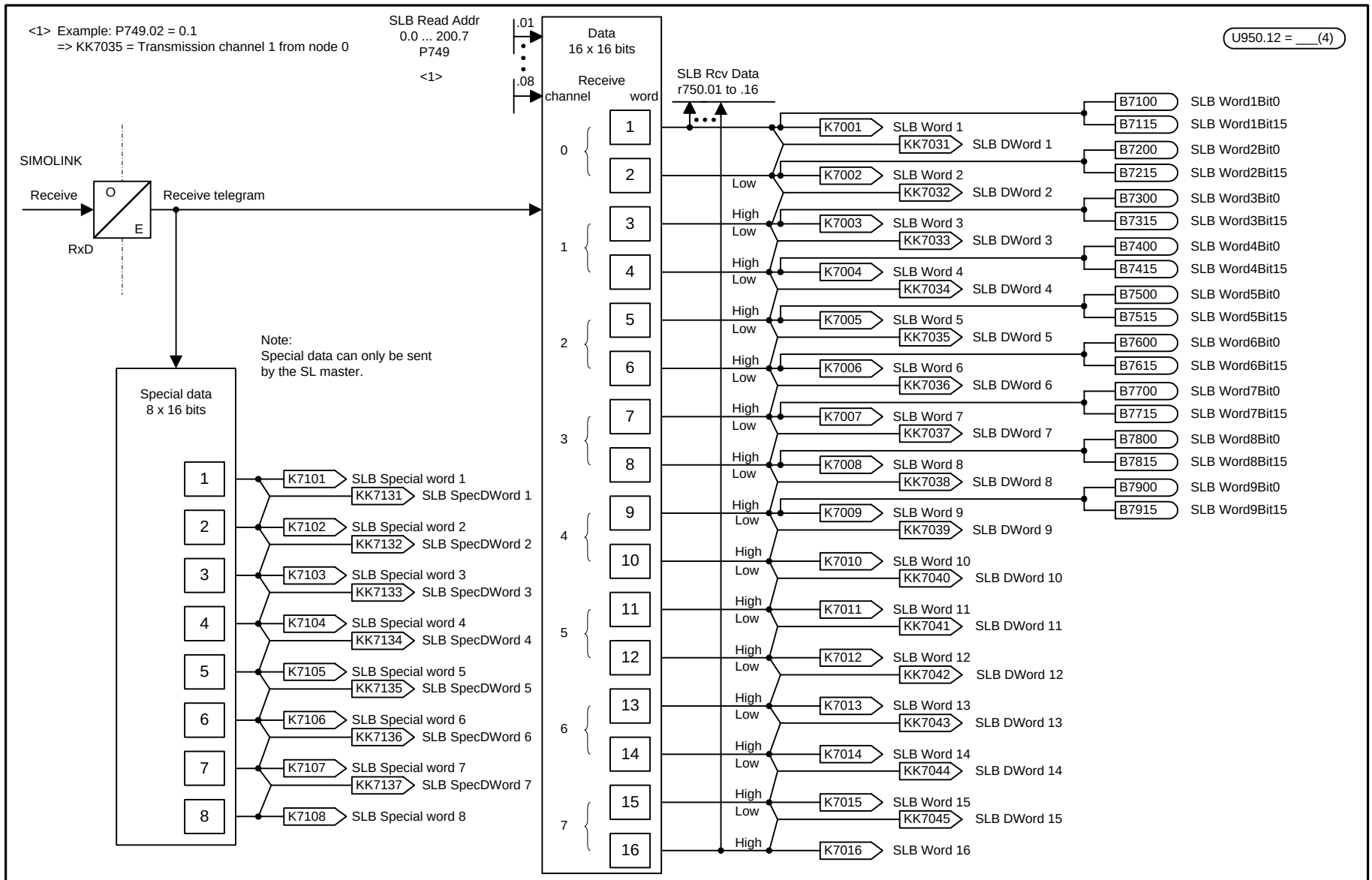
<1> Example: P749.02 = 0.1
=> KK7035 = Transmission channel 1 from node 0
SLB Read Addr
0.0 ... 200.7
P749
<1>
.01
.08
Data
16 x 16 bits
Receive
channel
word
U950.12 = ___(4)
SLB Rcv Data
r750.01 to .16
SIMOLINK
Receive
O
E
RxD
Receive telegram
Note:
Special data can only be sent
by the SL master.
Special data
8 x 16 bits
Low
High
K7001 SLB Word 1
KK7031 SLB DWord 1
K7002 SLB Word 2
KK7032 SLB DWord 2
K7003 SLB Word 3
KK7033 SLB DWord 3
K7004 SLB Word 4
KK7034 SLB DWord 4
K7005 SLB Word 5
KK7035 SLB DWord 5
K7006 SLB Word 6
KK7036 SLB DWord 6
K7007 SLB Word 7
KK7037 SLB DWord 7
K7008 SLB Word 8
KK7038 SLB DWord 8
K7009 SLB Word 9
KK7039 SLB DWord 9
K7010 SLB Word 10
KK7040 SLB DWord 10
K7011 SLB Word 11
KK7041 SLB DWord 11
K7012 SLB Word 12
KK7042 SLB DWord 12
K7013 SLB Word 13
KK7043 SLB DWord 13
K7014 SLB Word 14
KK7044 SLB DWord 14
K7015 SLB Word 15
KK7045 SLB DWord 15
K7016 SLB Word 16
B7100 SLB Word1Bit0
B7115 SLB Word1Bit15
B7200 SLB Word2Bit0
B7215 SLB Word2Bit15
B7300 SLB Word3Bit0
B7315 SLB Word3Bit15
B7400 SLB Word4Bit0
B7415 SLB Word4Bit15
B7500 SLB Word5Bit0
B7515 SLB Word5Bit15
B7600 SLB Word6Bit0
B7615 SLB Word6Bit15
B7700 SLB Word7Bit0
B7715 SLB Word7Bit15
B7800 SLB Word8Bit0
B7815 SLB Word8Bit15
B7900 SLB Word9Bit0
B7915 SLB Word9Bit15
K7101 SLB Special word 1
KK7131 SLB SpecDWord 1
K7102 SLB Special word 2
KK7132 SLB SpecDWord 2
K7103 SLB Special word 3
KK7133 SLB SpecDWord 3
K7104 SLB Special word 4
KK7134 SLB SpecDWord 4
K7105 SLB Special word 5
KK7135 SLB SpecDWord 5
K7106 SLB Special word 6
KK7136 SLB SpecDWord 6
K7107 SLB Special word 7
KK7137 SLB SpecDWord 7
K7108 SLB Special word 8

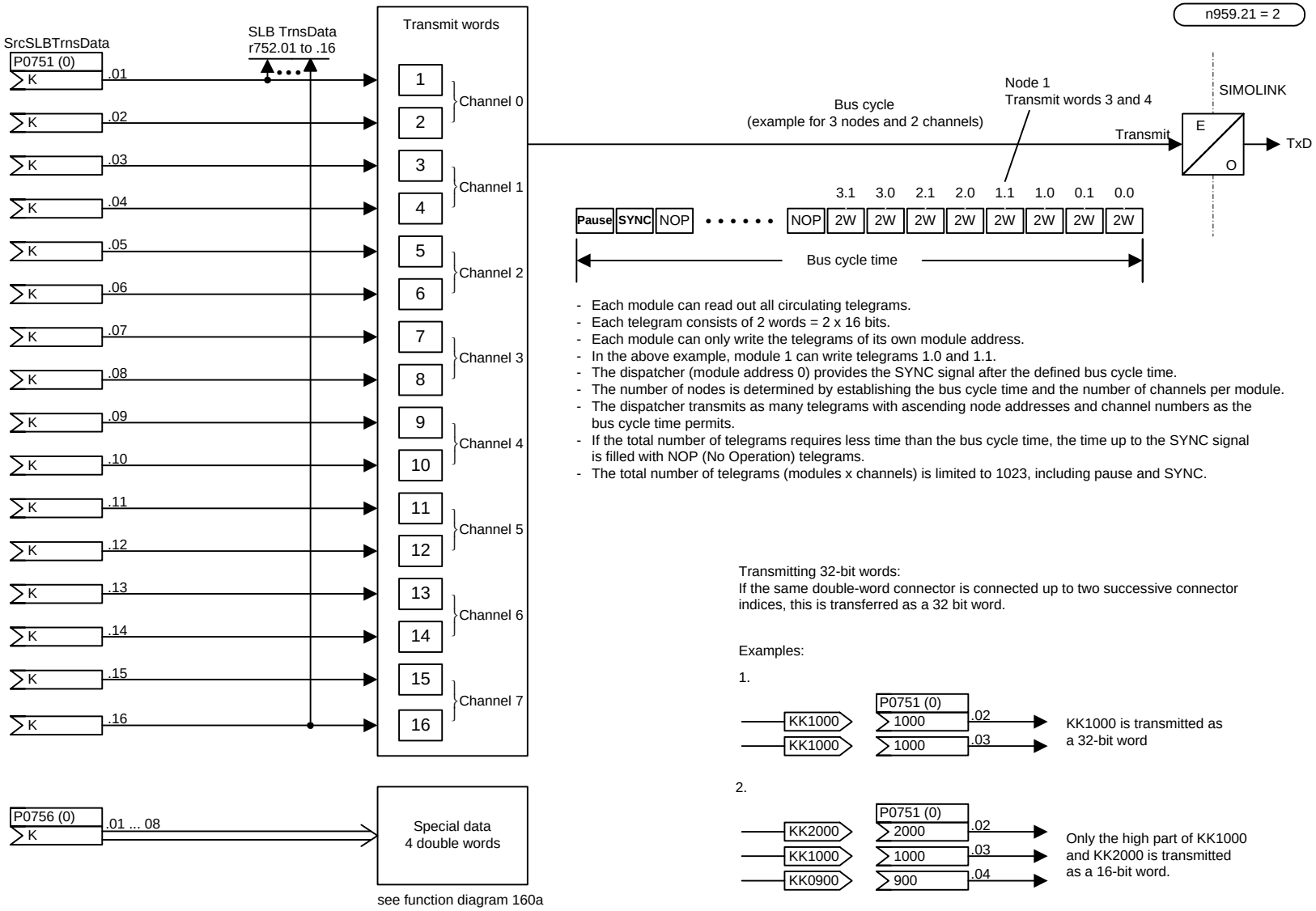

- Each module can read out all circulating telegrams.
- Each telegram consists of 2 words = 2 x 16 bits.
- Each module can only write the telegrams of its own module address.
- In the above example, module 1 can write telegrams 1.0 and 1.1.
- The dispatcher (module address 0) provides the SYNC signal after the defined bus cycle time.
- The number of nodes is determined by establishing the bus cycle time and the number of channels per module.
- The dispatcher transmits as many telegrams with ascending node addresses and channel numbers as the bus cycle time permits.
- If the total number of telegrams requires less time than the bus cycle time, the time up to the SYNC signal is filled with NOP (No Operation) telegrams.
- The total number of telegrams (modules x channels) is limited to 1023, including pause and SYNC.

Transmitting 32-bit words:
If the same double-word connector is connected up to two successive connector indices, this is transferred as a 32 bit word.

Examples:

1.

KK1000 is transmitted as a 32-bit word

2.

Only the high part of KK1000 and KK2000 is transmitted as a 16-bit word.

n959.21 = 2

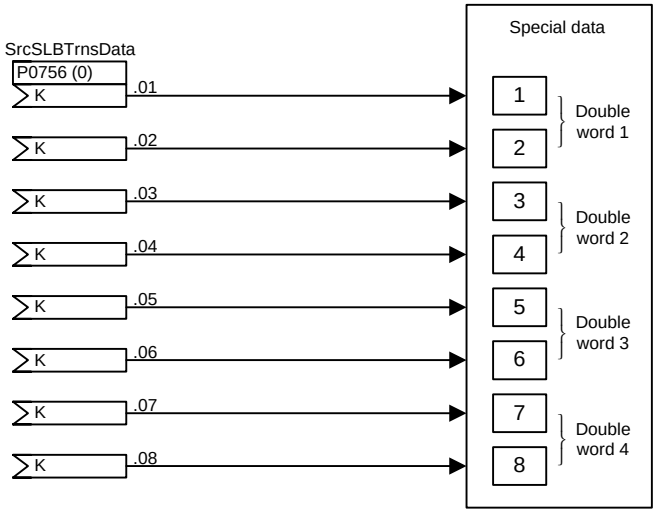

Notes:
Special data may only be transmitted by the dispatcher (bus address P740 = 0)!

If at least one special datum is assigned (P0756.x ≠ 0), the number of addressed nodes is reduced vis-a-vis the formula on function diagram 140:

$$\text{Number of addressed nodes with special data} = \left(\frac{P746 + 3.18\,\mu s}{6.36\,\mu s} - 6\right) \cdot \frac{1}{P745};\quad 6.36\,\mu s = \text{Time for a telegram}$$

(3.18 due to rounding off)

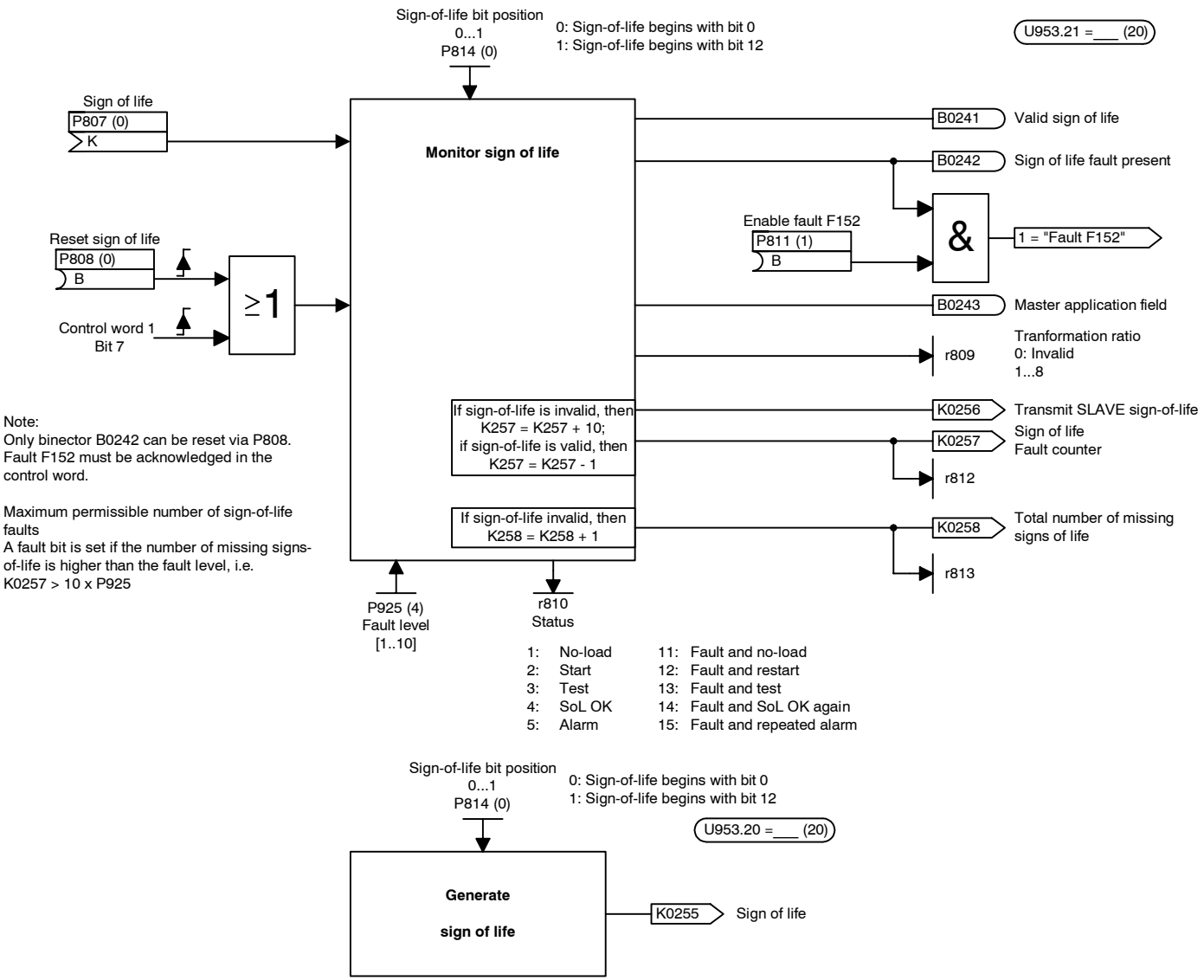
Sign-of-life bit position
0...1
P814 (0)
0: Sign-of-life begins with bit 0
1: Sign-of-life begins with bit 12
U953.21 =___ (20)
Sign of life
P807 (0)
K
Monitor sign of life
B0241
Valid sign of life
B0242
Sign of life fault present
Enable fault F152
P811 (1)
B
&
1 = "Fault F152"
Reset sign of life
P808 (0)
B
≥1
Control word 1
Bit 7
B0243
Master application field
r809
Tranformation ratio
0: Invalid
1...8
If sign-of-life is invalid, then
K257 = K257 + 10;
if sign-of-life is valid, then
K257 = K257 - 1
K0256
Transmit SLAVE sign-of-life
K0257
Sign of life
Fault counter
r812
If sign-of-life invalid, then
K258 = K258 + 1
K0258
Total number of missing
signs of life
r813
P925 (4)
Fault level
[1..10]
r810
Status
Note:
Only binector B0242 can be reset via P808.
Fault F152 must be acknowledged in the control word.
Maximum permissible number of sign-of-life faults
A fault bit is set if the number of missing signs-of-life is higher than the fault level, i.e.
K0257 > 10 x P925
1: No-load
2: Start
3: Test
4: SoL OK
5: Alarm
11: Fault and no-load
12: Fault and restart
13: Fault and test
14: Fault and SoL OK again
15: Fault and repeated alarm
Sign-of-life bit position
0...1
P814 (0)
0: Sign-of-life begins with bit 0
1: Sign-of-life begins with bit 12
U953.20 =___ (20)
Generate
sign of life
K0255
Sign of life

U953.29 =___ (20)

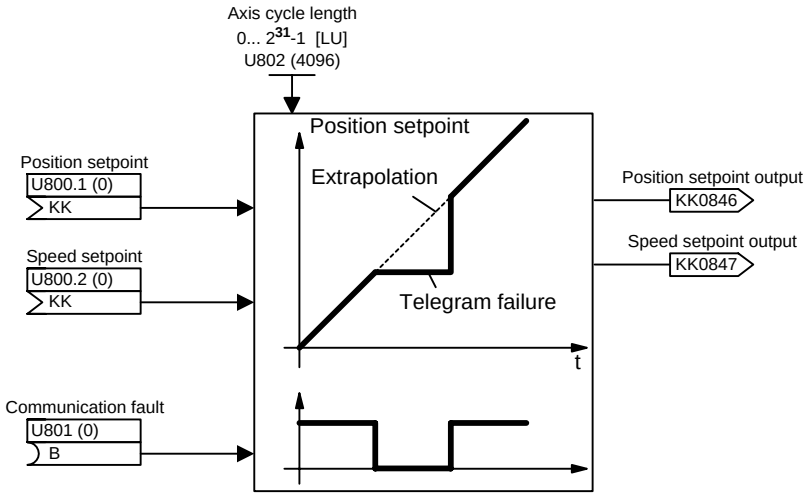

1	2	3	4	5	6	7	8
Communication				V1.6	fp_mc_171_e.vsd	Function diagram	- 171 -
Position setpoint extrapolator for bridging telegram failures					08.01.02	MASTERDRIVES MC	

<1> Only possible for encoder 1 (motor encoder)!
<2> The reference point (setting/shifting) will either be permanently specified in the unit, or transferred via an additional channel from the master.
<3> In the event of a fault the fault value will be active in Gx_XIST2
1 = Encoder sum error
2 = Zero mark monitoring
4 = Terminate reference mark search
5 = Terminate collect reference value
6 = Terminate flying measurement
7 = Terminate collect measured value
8 = Terminate absolute value transmission on
A = Error in reading absolute track of the absolute value encoder (EnDat-encoder)
<4> The reference value is shifted, for example, via an analog switch which acts on the position offset of the respective encoder.

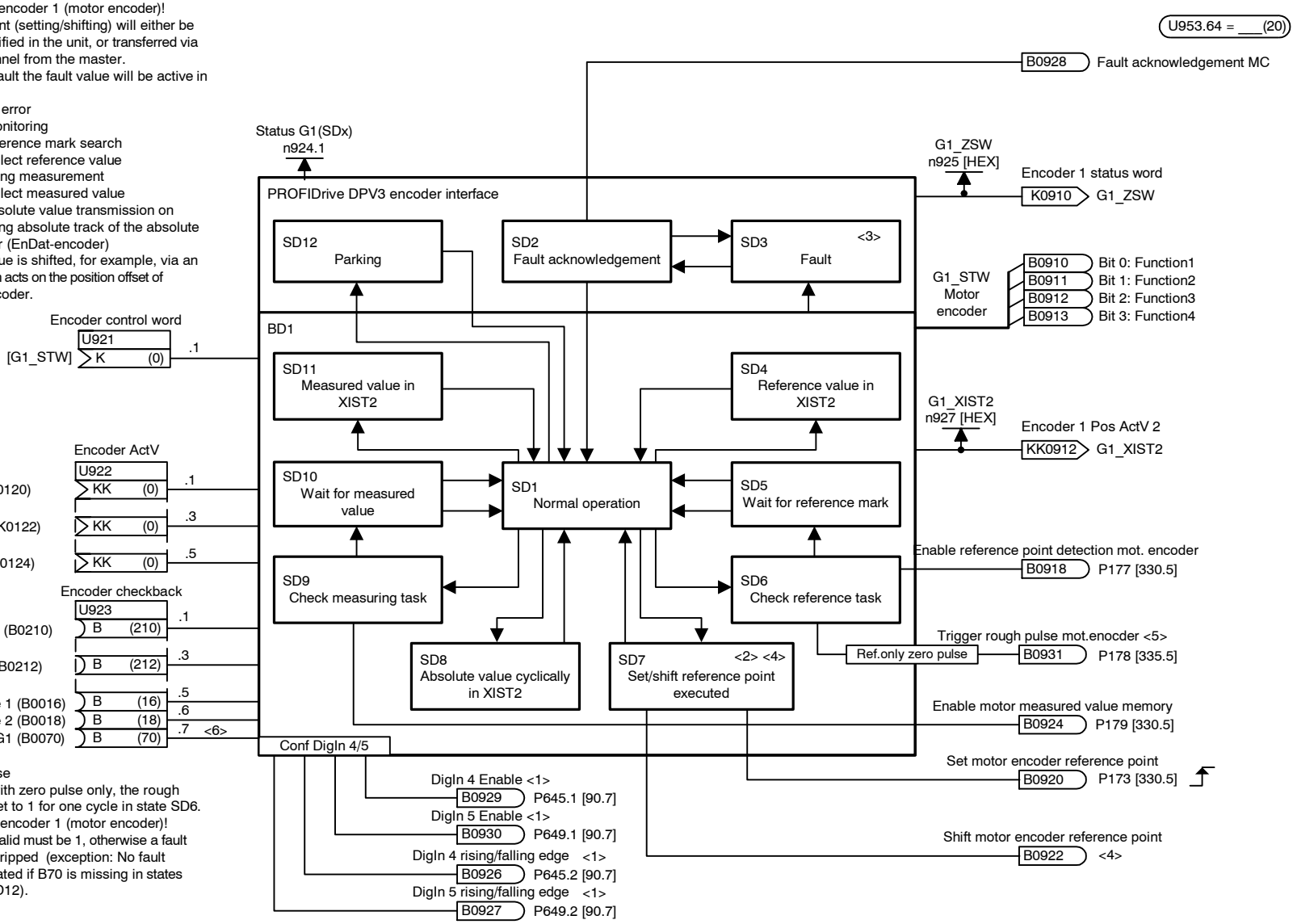

<5> Trigger rough pulse
For referencing with zero pulse only, the rough pulse (P178) is set to 1 for one cycle in state SD6. Only possible for encoder 1 (motor encoder)!
<6> Measured value valid must be 1, otherwise a fault message will be tripped (exception: No fault message is activated if B70 is missing in states SD1, SD7 and SD12).

1	2	3	4	5	6	7	8
Communication				V1.6	fp_mc_172a_e.vsd	Function diagram	- 172a -
Encoder interface DP V3 encoder 1 (motor encoder)					07.01.02	MASTERDRIVES MC	

<1> Only possible for SBP (signal source at SBP)
<2> The reference point (setting/shifting) is either permanently specified in the unit or transferred via an additional channel from the master.
<3> In the event of a fault the fault value will be active in Gx_XIST2
1 = Encoder sum error
2 = Zero mark monitoring
4 = Terminate reference mark search
5 = Terminate collect reference value
6 = Terminate flying measurement
7 = Terminate collect measured value
8 = Terminate absolute value transmission on
A = Error in reading absolute track of the absolute value encoder (EnDat-encoder)
<4> The reference value is shifted, for example, via an analog switch which acts on the position offset of the respective encoder.

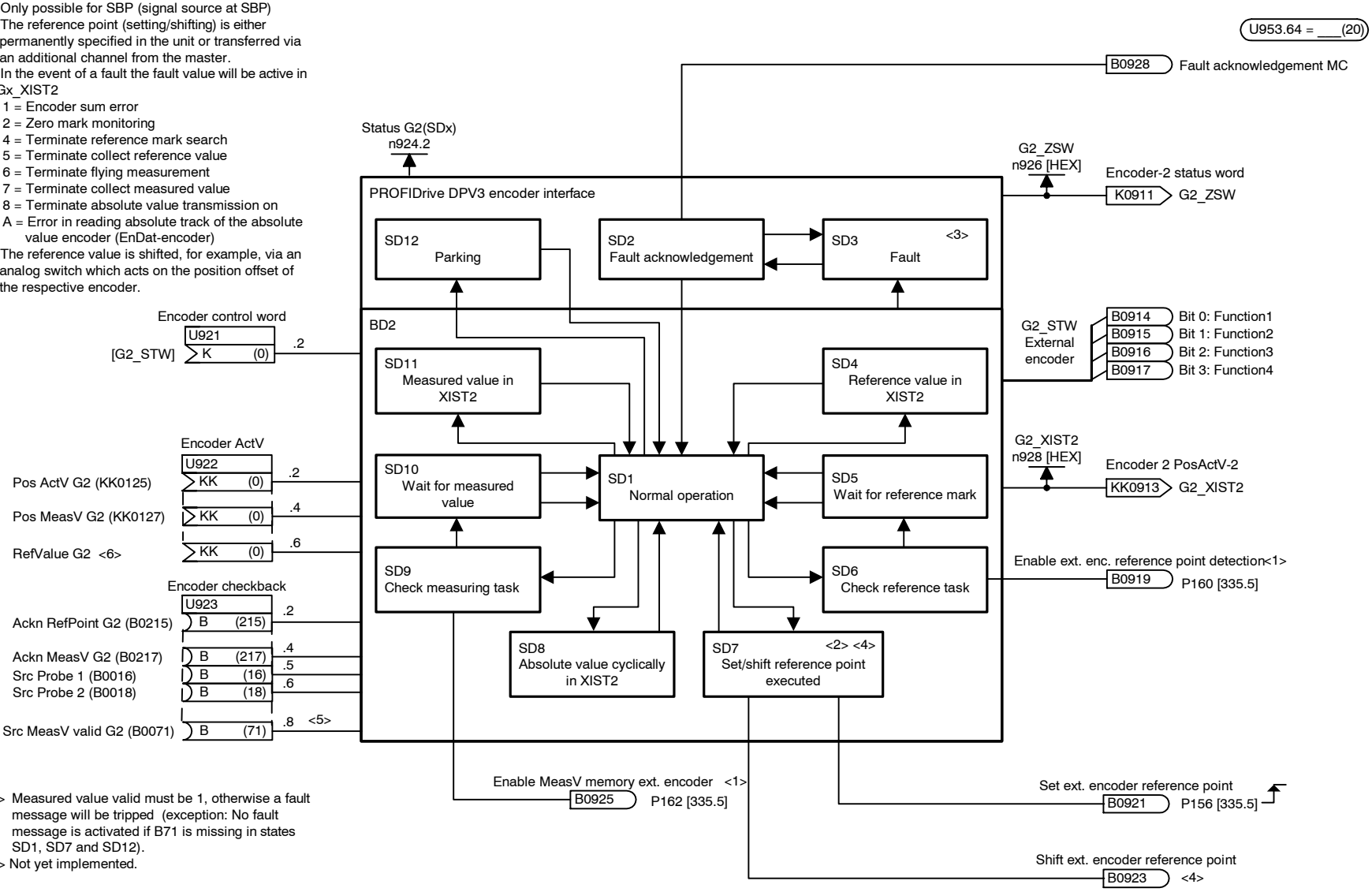

<5> Measured value valid must be 1, otherwise a fault message will be tripped (exception: No fault message is activated if B71 is missing in states SD1, SD7 and SD12).
<6> Not yet implemented.

1	2	3	4	5	6	7	8
Communication				V1.6	fp_mc_172b_e.vsd	Function diagram	- 172b -
Encoder interface DP V3 encoder 2 (external encoder)					07.01.02	MASTERDRIVES MC	

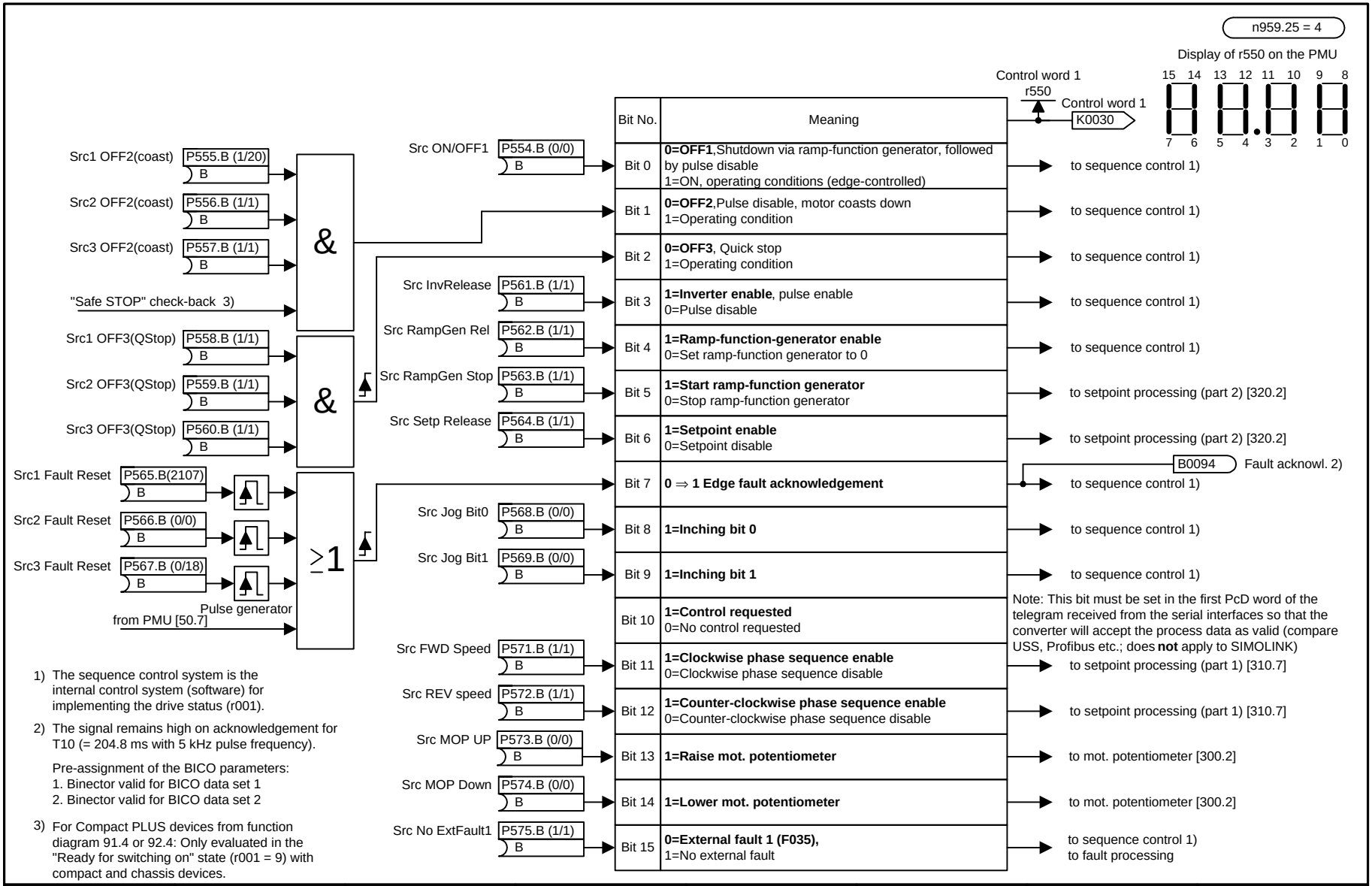

1) The sequence control system is the internal control system (software) for implementing the drive status (r001).

2) The signal remains high on acknowledgement for T10 (= 204.8 ms with 5 kHz pulse frequency).

Pre-assignment of the BICO parameters:
1. Binector valid for BICO data set 1
2. Binector valid for BICO data set 2

3) For Compact PLUS devices from function diagram 91.4 or 92.4: Only evaluated in the "Ready for switching on" state (r001 = 9) with compact and chassis devices.

Pre-assignment of the BICO parameters:
1. Binector valid for BICO data set 1
2. Binector valid for BICO data set 2

n959.26 = 4

Display of r551 on the PMU

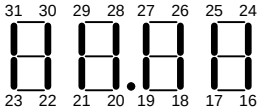

Control Word 2
r551

Control Word 2
K0031

Bit No.	Meaning	
Bit 16	**Selection function data set bit 0**	B0092 FDS Bit 0 to data sets [540.5]
Bit 17	**Selection function data set bit 1**	B0093 FDS Bit 1 to data sets [540.5]
Bit 18	**Reserve**	
Bit 19	**Reserve**	
Bit 20	**Select fixed setpoint bit 0**	to fixed setpoints [290.7]
Bit 21	**Select fixed setpoint bit 1**	to fixed setpoints [290.7]
Bit 22	**Reserve**	
Bit 23	**1= Enable flying restart** 3) 0=Flying restart disabled	to sequence control 1)
Bit 24	**1=Enable droop, speed controller** 0=Droop, speed controller disabled	to speed control [360.2]
Bit 25	**1=Enable speed controller** 0=Speed controller disabled	to speed control [360.7]
Bit 26	**0=External fault 2 (F036)** 2) 1=No external fault 2	to sequence control 1) to alarm processing
Bit 27	**0=Master drive (speed control)** 1=Slave drive (torque control)	to speed control [360.7]
Bit 28	**0=External alarm 1 (A015)** 1=No external alarm 1	to sequence control 1) to alarm processing
Bit 29	**0=External alarm 2 (A016)** 1=No external alarm 2	to sequence control 1) to alarm processing
Bit 30	**0=Select BICO data set 1** 1=Select BICO data set 2	to data sets [540.4]
Bit 31	**0=No checkback, waiting time P600 active** 1=Checkback main contactor	to sequence control 1)

Src FuncDSetBit0 — P576.B (0/0) B → Bit 16
Src FuncDSetBit1 — P577.B (0/0) B → Bit 17
Src FixSetp Bit0 — P580.B (0/16) B → Bit 20
Src FixSetp Bit1 — P581.B (0/0) B → Bit 21
Src Fly Release — P583.B (0/0) B → Bit 23
Src Droop Rel — P584.B (0/0) B → Bit 24
Src n-Reg Rel — P585.B (1/1) B → Bit 25
Src No ExtFault2 — P586.B (1/1) B → Bit 26
Src Master/Slave — P587.B (0/0) B → Bit 27
Src No Ext Warn1 — P588.B (1/1) B → Bit 28
Src No Ext Warn2 — P589.B (1/1) B → Bit 29
Src BICO DSet — P590 (0) B → Bit 30
Src ContactorMsg — P591.B (0/0) B → Bit 31

1 → No n-Reg Enable B0099

1) The sequence control system is the internal control system (software) for implementing the drive status (r001).

2) The fault signal is sent only if the drive is ON (operating status ≥ 011)

3) The "flying restart" function is not implemented.

n959.27 = 4

Status Word 1
r552

Status Word 1
K0032

	Bit No.	Meaning
from sequence control 1)	Bit 0	**1=Ready to switch on** 0=Not ready to switch on
from sequence control 1)	Bit 1	**1=Ready for operation** (DC link loaded, pulses disabled) 0=Not ready for operation
from sequence control 1)	Bit 2	**1=Run** (voltage at output terminals) 0=Pulses disabled
from sequence control 1)	Bit 3	**1=Fault active (pulses disabled)** **0=No fault**
from sequence control 1)	Bit 4	**0=OFF2 active** 1=No OFF2
from sequence control 1)	Bit 5	**0=OFF3 active** 1=No OFF3
from sequence control 1)	Bit 6	**1=Switch-on inhibit** 0=No switch-on inhibit (possible to switch on)
from alarm processing	Bit 7	**1=Warning active** 0=No warning
from messages [480.5]	Bit 8	**1=No setpoint/actual value deviation detected** 0=Setpoint/actual value deviation
from sequence control 1)	Bit 9	**1=PcD control requested** (always 1)
from messages [480.5]	Bit 10	**1=Comparison value reached** 0=Comparison value not reached
from fault processing	Bit 11	**1=Low voltage fault** 0=No low voltage fault
from sequence control 1)	Bit 12	**1=Request to energize main contactor** 0=Request not to energize main contactor
from setpoint processing (part 2) [320.5]	Bit 13	**1=Ramp-function generator active** 0=Ramp-function generator not active
from messages [480.3]	Bit 14	**1=Positive speed setpoint** 0=Negative speed setpoint
	Bit 15	**Reserve**

B0100	1	Rdy for ON	B0101 Not Rdy for ON
B0102	1	Rdy for Oper	B0103 Not Rdy for Oper
B0104	1	Operation	B0105 Not operating
B0106	1	Fault	B0107 No fault
B0108	1	No OFF2	B0109 OFF2
B0110	1	No OFF3	B0111 OFF3
B0112	1	Blocked	B0113 Not Blocked
B0114	1	Warning	B0115 No Warning
B0116	1	No Deviation	B0117 Deviation
B0120	1	CompV OK	B0121 CompV not OK
B0122	1	Low Voltage	B0123 No Low Voltage
B0124	1	Energize MCon	B0125 N.Energ.MCon
B0126	1	RampGen active	B0127 RampGen n.act.
B0128	1	Speed Setp FWD	B0129 Speed Setp REV

Display of r552 on the PMU

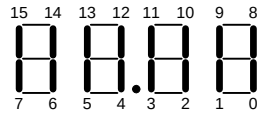

1) The sequence control system is the internal control system (software) for implementing the drive status (r001).

1	2	3	4	5	6	7	8
Status word 1				V1.6	fp_mc_200_e.vsd	Function diagram	- 200 -
					08.01.02	MASTERDRIVES MC	

n959.28 = 4

Display of r553 on the PMU

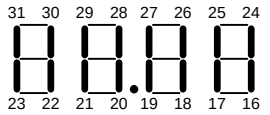

Status Word 2
r553

Status Word 2
K0033

	Bit No.	Meaning
from sequence control 1) →	Bit 16	**1=Flying restart or excitation active** 0=Flying restart not active or excitation finished
	Bit 17	**Reserve**
from messages [480.7] →	Bit 18	**0=Overspeed** 1=No overspeed
from sequence control 1) →	Bit 19	**1=External fault 1 active** **0=No external fault 1**
from sequence control 1) →	Bit 20	**1=External fault 2 active** 0=No external fault 2
from sequence control 1) →	Bit 21	**1=External alarm active** 0=No external alarm
from alarm processing [490.4] →	Bit 22	**1=Converter overload alarm active (A025)** 0=No converter overload alarm
from fault processing [490.2] →	Bit 23	**1=Converter overtemperature fault active** 0=No converter overtemperature fault
from alarm processing [490.2] →	Bit 24	**1=Converter overtemperature alarm active** 0=No converter overtemperature alarm
from alarm processing [490.7] →	Bit 25	**1=Motor overtemperature alarm active** 0=No motor overtemperature alarm
from fault processing [490.7] →	Bit 26	**1=Motor overtemperature fault active** 0=No motor overtemperature fault
	Bit 27	**Reserve**
from fault processing →	Bit 28	**1=Motor pulled out/blocked fault active** 0=No motor pulled out/blocked fault
from sequence control 1) →	Bit 29	**1=Bypass contactor energized (only AC units)** 0=Bypass contactor not energized
	Bit 30	**Reserve**
from sequence control 1) →	Bit 31	**1=Pre-charging active** 0=Pre-charging not active

B0132 → 1 → B0133 Fly/Exc n.act. 2)
Fly/Exc active

B0136 → 1 → B0137 No Overspeed
Overspeed

B0138 → 1 → B0139 No Ext Fault 1
Ext Fault 1

B0140 → 1 → B0141 No Ext Fault 2
Ext Fault 2

B0142 → 1 → B0143 No Ext Warning
Ext Warning

B0144 → 1 → B0145 No OvldWarn Drv
Ovld Warn Drive

B0146 → 1 → B0147 No Tmp Flt Drv
Tmp Flt Drive

B0148 → 1 → B0149 No TmpWarnDrv
TmpWarn Drive

B0150 → 1 → B0151 No TmpWarnMotor
TmpWarnMotor

B0152 → 1 → B0153 No TmpFltMotor
TmpFltMotor

B0156 → 1 → B0157 Motor not blocked
Motor blocked

B0158 → 1 → B0159 ChrgRelay open
ChrgRelay close

B0162 → 1 → B0163 Prechrg n.act.
Prechrg active

1) The sequence control system is the internal control system (software) for implementing the drive status (r001).

2) in addition

Excitation End
B0255
Dependent on P602

1	2	3	4	5	6	7	8
Status word 2				V1.6	fp_mc_210_e.vsd	Function diagram	- 210 -
					08.01.02	MASTERDRIVES MC	

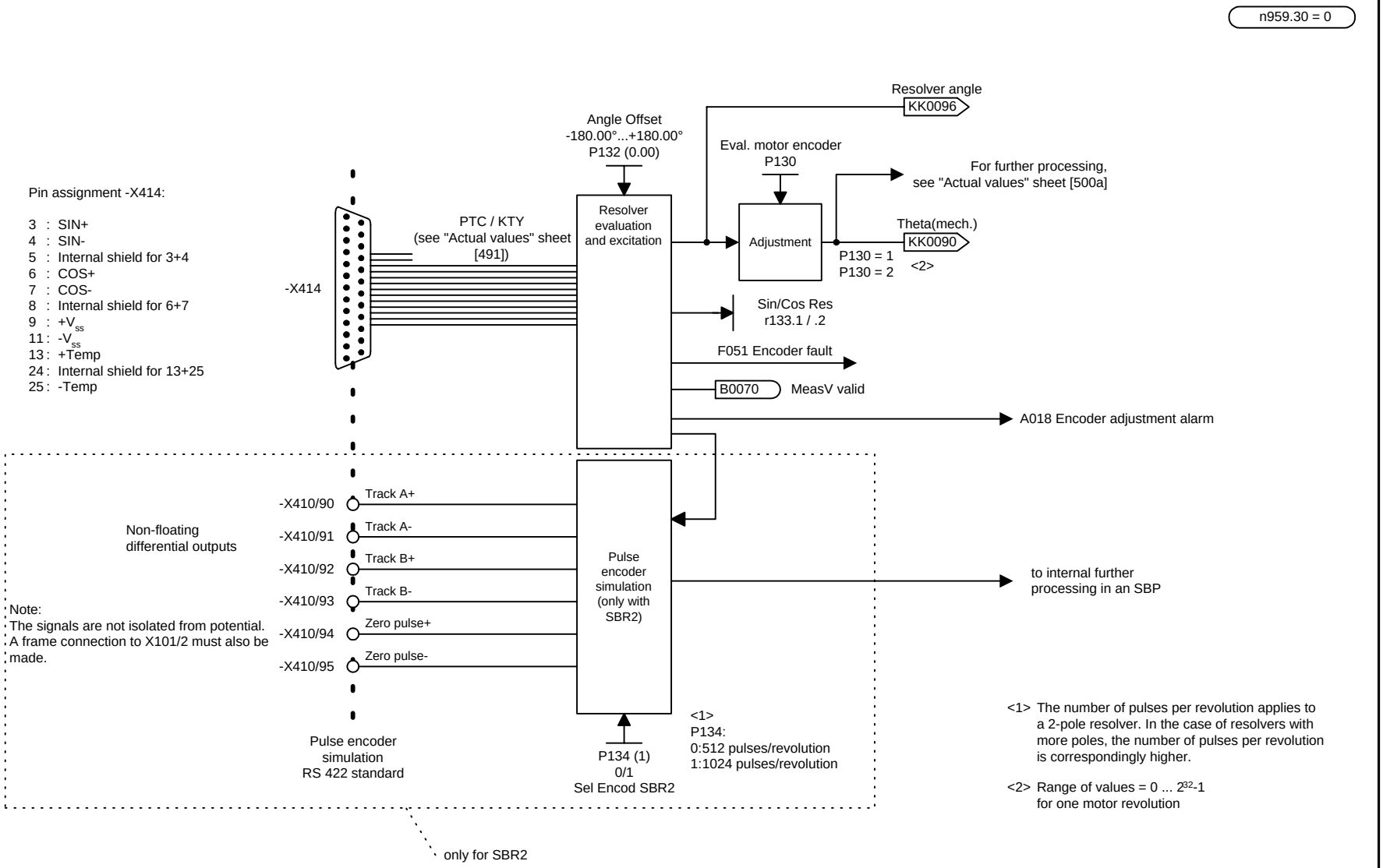
n959.30 = 0
Resolver angle
KK0096
Angle Offset
-180.00°...+180.00°
P132 (0.00)
Eval. motor encoder
P130
For further processing,
see "Actual values" sheet [500a]
Pin assignment -X414:
3 : SIN+
4 : SIN-
5 : Internal shield for 3+4
6 : COS+
7 : COS-
8 : Internal shield for 6+7
9 : +Vss
11 : -Vss
13 : +Temp
24 : Internal shield for 13+25
25 : -Temp
-X414
PTC / KTY
(see "Actual values" sheet [491])
Resolver evaluation and excitation
Adjustment
Theta(mech.)
KK0090
P130 = 1
P130 = 2
<2>
Sin/Cos Res
r133.1 / .2
F051 Encoder fault
B0070
MeasV valid
A018 Encoder adjustment alarm
Non-floating differential outputs
-X410/90
Track A+
-X410/91
Track A-
-X410/92
Track B+
-X410/93
Track B-
-X410/94
Zero pulse+
-X410/95
Zero pulse-
Pulse encoder simulation (only with SBR2)
to internal further processing in an SBP
Note:
The signals are not isolated from potential.
A frame connection to X101/2 must also be made.
Pulse encoder simulation
RS 422 standard
P134 (1)
0/1
Sel Encod SBR2
<1>
P134:
0:512 pulses/revolution
1:1024 pulses/revolution
only for SBR2
<1> The number of pulses per revolution applies to a 2-pole resolver. In the case of resolvers with more poles, the number of pulses per revolution is correspondingly higher.
<2> Range of values = 0 ... 2^32-1 for one motor revolution

Pin assignment -X424:

1 : P encoder
2 : M encoder
3 : A+
4 : A-
5 : Internal shield for 3+4
6 : B+
7 : B-
8 : Internal shield for 6+7
13 : +Temp
14 : Encoder sense
16 : 0 V sense
17 : R+
18 : R-
19 : C+
20 : C-
21 : D+
22 : D-
24 : Internal shield for 13+25
25 : -Temp
Housing: external shield

The encoder connection may neither be closed nor removed when live!
The converter must be de-energized (24 V electronics power supply disconnected and DC link fully discharged)!

SBM2: n959.31 = 6
Position correction
Zero pulse monitoring
Amplitude monitoring

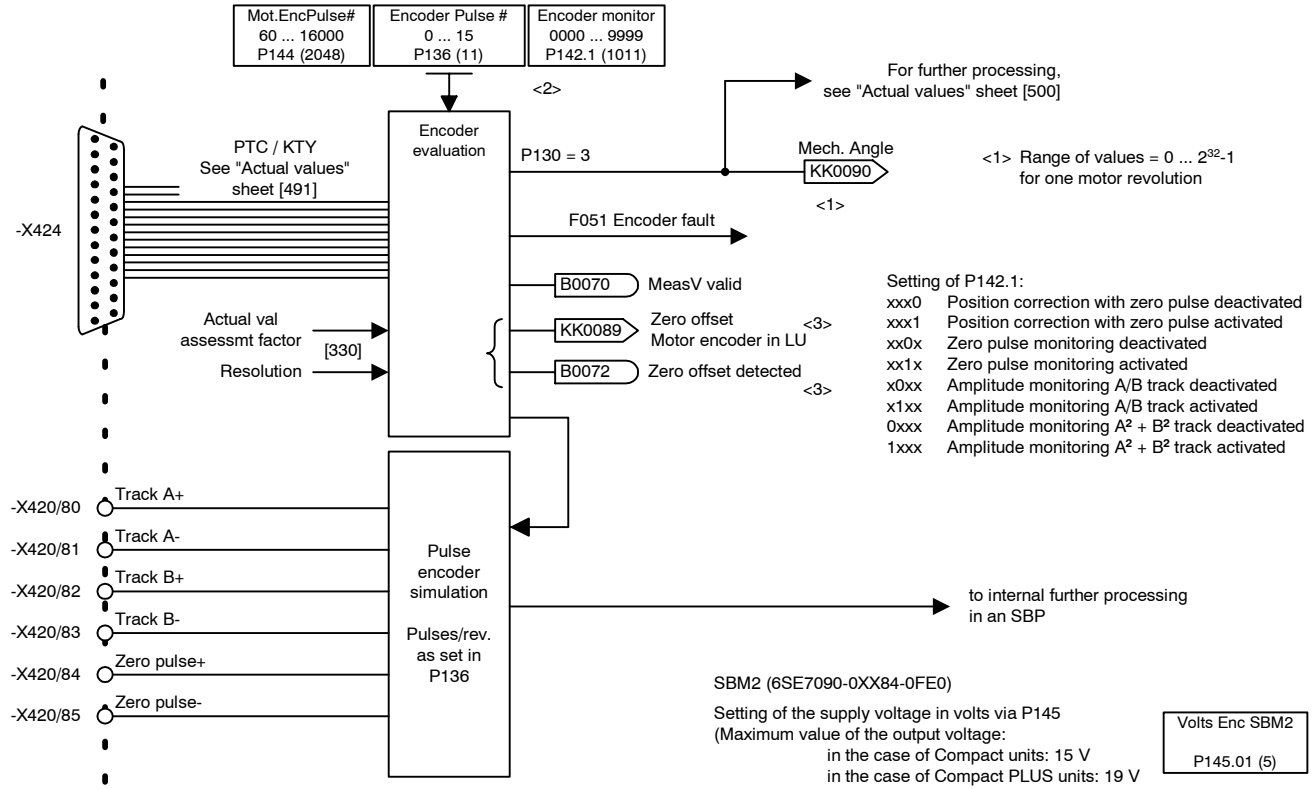

<1> Range of values = 0 ... 2^{32}-1 for one motor revolution

Setting of P142.1:
xxx0 Position correction with zero pulse deactivated
xxx1 Position correction with zero pulse activated
xx0x Zero pulse monitoring deactivated
xx1x Zero pulse monitoring activated
x0xx Amplitude monitoring A/B track deactivated
x1xx Amplitude monitoring A/B track activated
0xxx Amplitude monitoring $A^2 + B^2$ track deactivated
1xxx Amplitude monitoring $A^2 + B^2$ track activated

Note:
The signals are not isolated from potential.
A frame connection to X101/2 must also be made.

SBM2 (6SE7090-0XX84-0FE0)

Setting of the supply voltage in volts via P145
(Maximum value of the output voltage:
in the case of Compact units: 15 V
in the case of Compact PLUS units: 19 V
independent of parameterizing)

Volts Enc SBM2
P145.01 (5)

SBM (6SE7090-0XX84-0FD0)
2 hook switches for voltage supply of the encoder on the board:
5 V : Both switches open
7.5 V : S1 open, S2 closed
15 V : Both switches closed

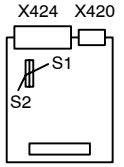

<2>
Setting the pulse number
P136 = 0: Pulse # from P144
P136 = 1: Reserved
P136 = 2..14: Encoder with $2P^{136}$ pulses
P136 = 15: Encoder with 2048 pulses without evaluation of zero pulse

<3>
Only for SBM2
(6SE7090-0XX84-0FE0)

Pin assignment -X424:

1 : P encoder
2 : M encoder
3 : A+
4 : A-
5 : Internal shield for 3+4
6 : B+
7 : B-
8 : Internal shield for 6+7
13 : +Temp
14 : Encoder sense
16 : 0 V Sense
17 : R+
18 : R-
19 : C+
20 : C-
21 : D+
22 : D-
24 : Internal shield for 13+25
25 : -Temp
Housing: external shield

The encoder connection may neither be closed nor removed when live!
The converter must be de-energized (24 V electronics power supply disconnected and DC link fully discharged)!

n959.36 = 6

Position correction with zero pulse

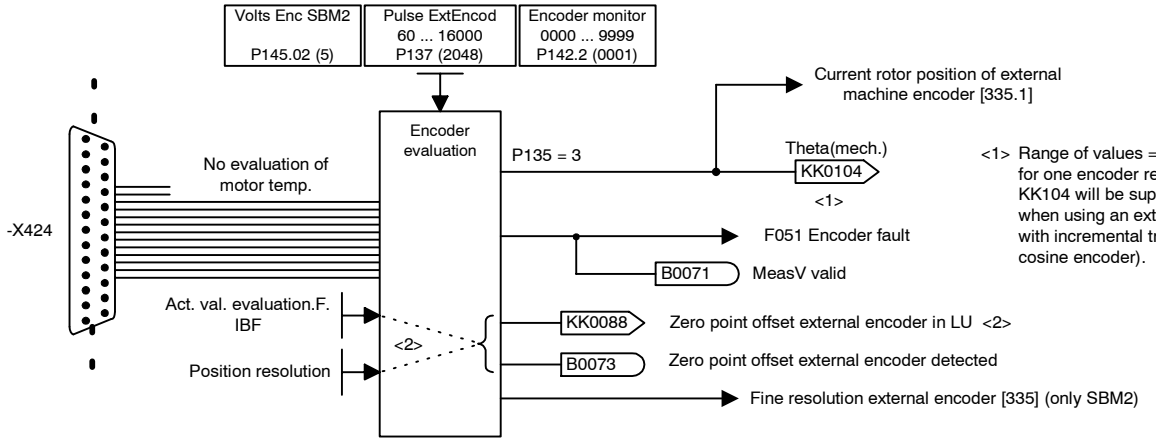

<1> Range of values = 0 ... 2^{32}-1 for one encoder revolution KK104 will be supported only when using an external encoder with incremental tracks (sine-/ cosine encoder).

Setting of P142.2:
xxx0 Position correction with zero pulse deactivated
xxx1 Position correction with zero pulse activated

<2> If the external encoder is assigned to position detection on the motor side (P182 = 104), parameterization of the position detection on the motor side (actual value evaluation factor IBF P169/ P170, resolution P171, IBF numerator/denominator P180 to FD330) is used for calculating the zero offset in LU. Otherwise the corresponding parameter of the external position detection (actual value evaluation factor P152/P153, resolution P154 , IBF numerator/ denominator P180 to FD335) is used for this purpose.

SBM2 (6SE7090-0XX84-0FE0)

Setting of the supply voltage in volts via P145
(Maximum value of the output voltage:
in the case of Compact units: 15 V
in the case of Compact PLUS units: 19 V
independent of parameterization)

SpgGeber SBM2
P145.02 (5)

SBM (6SE7090-0XX84-0FD0)
2 hook switches for voltage supply of the encoder on the board:
5 V : both switches open
7,5 V : S1 open, S2 closed
15 V : both switches closed

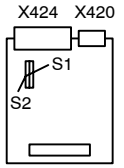

1	2	3	4	5	6	7	8
Encoder				V1.66	fp_mc_242_e.vsd	Function diagram	- 242 -
Encoder evaluation external encoder (SBM2 not in slot C and sin/cos encoder)					08.12.05	MASTERDRIVES MC	

The encoder connection may neither be closed nor removed when live!
The converter must be de-energized (24 V electronics power supply disconnected and DC link fully discharged)!

Terminal assignment -X400:

60 : Supply voltage
61 : Supply ground
62 : Temp -
63 : Temp +
64 : Rough/fine ground
65 : Rough pulse 1 (HTL level)
66 : Rough pulse 2 (HTL level)
67 : Fine pulse 2 (HTL level)

Terminal assignment -X401:

68 : Track A+
69 : Track A-
70 : Track B+
71 : Track B-
72 : Zero pulse
73 : Zero pulse -
74 : CTRL +
75 : CTRL - = M

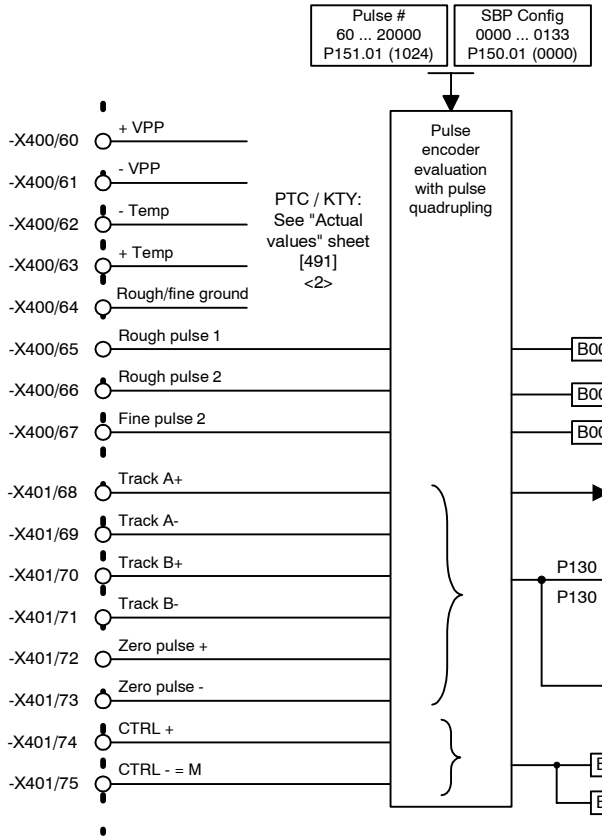

Setting of P150.01:

A/B/CTRL track input level
xxx0: A/B track HTL unipolar
xxx1: A/B track TTL unipolar
xxx2: A/B track HTL differential input
xxx3: A/B track TTL/RS422

Zero track input level
xx0x: zero track HTL unipolar
xx1x: zero track TTL unipolar
xx2x: zero track HTL differential input
xx3x: zero track TTL/RS422

Encoder power supply <3>
x0xx: 5 V
x1xx: 15 V

n959.32 = 4

<1> Range of values = 0 ... 2^{32}-1 for one encoder revolution

<2> Evaluation of motor temperature not possible when SBP is in slot C

Terminating resistors:
Switches S1.1 to S1.3 closed -> active
(factory setting)

<3> Power supply encoder
Switch S1.4 open -> active
(factory setting)

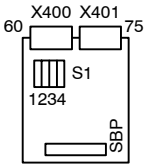

1	2	3	4	5	6	7	8
Encoder				V1.6	fp_mc_250_e.vsd	Function diagram	- 250 -
Pulse encoder evaluation, motor encoder (SBP board in slot C)					07.01.02	MASTERDRIVES MC	

The encoder connection may neither be closed nor removed when live!
The converter must be de-energized (24 V electronics power supply disconnected and DC link fully discharged)!

Terminal assignment -X400:

60 : Supply voltage
61 : Supply ground
62 : Temp -
63 : Temp +
64 : Rough/fine ground
65 : Rough pulse 1 (HTL level)
66 : Rough pulse 2 (HTL)
67 : Fine pulse 2 (HTL)

Terminal assignment -X401:

68 : Track A+
69 : Track A-
70 : Track B+
71 : Track B-
72 : Zero pulse
73 : Zero pulse -
74 : CTRL +
75 : CTRL - = M

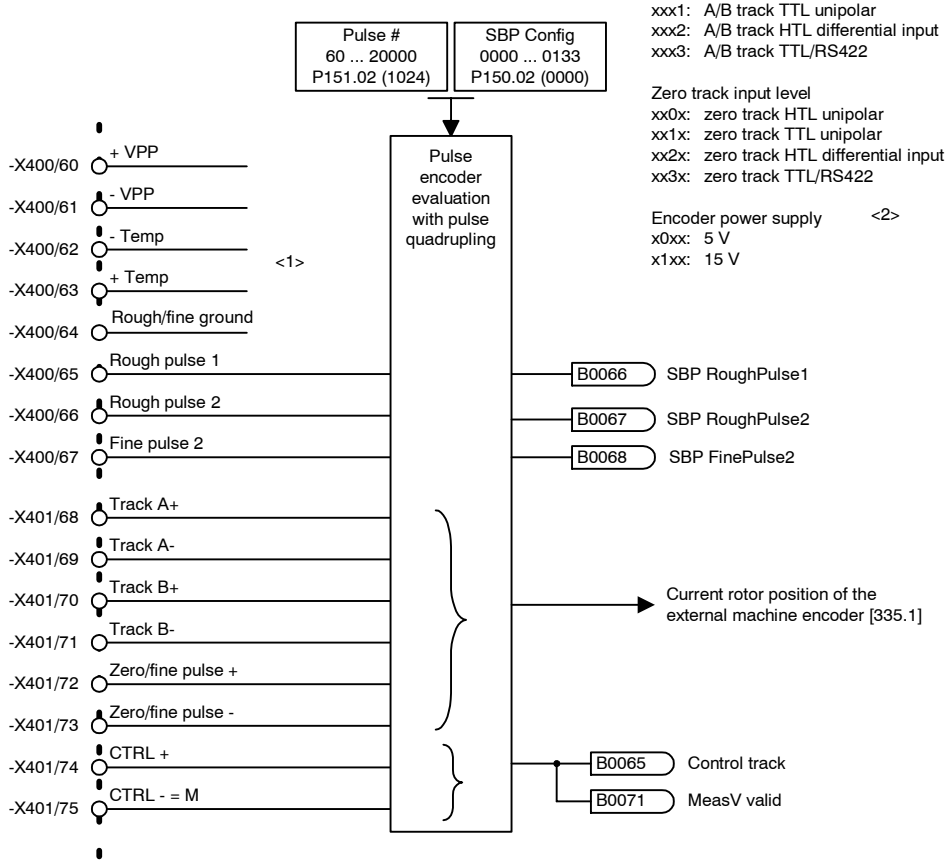

Setting of P150.02:

A/B/CTRL track input level
xxx0: A/B track HTL unipolar
xxx1: A/B track TTL unipolar
xxx2: A/B track HTL differential input
xxx3: A/B track TTL/RS422

Zero track input level
xx0x: zero track HTL unipolar
xx1x: zero track TTL unipolar
xx2x: zero track HTL differential input
xx3x: zero track TTL/RS422

Encoder power supply <2>
x0xx: 5 V
x1xx: 15 V

n959.35 = U950.17 = ___ (6)

The function always has the same sampling time as in function diagram 335 "Position sensing for external encoder"

<1>
WARNING It is not possible to evaluate the motor temperature for encoder evaluations that are not inserted in slot C.

Terminating resistors:
Switches S1.1 to S1.3 closed -> active
(factory setting)

<2> Power supply encoder
Switch S1.4 open -> active
(factory setting)

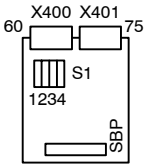

1	2	3	4	5	6	7	8
Encoder				V1.6	fp_mc_255_e.vsd	Function diagram	- 255 -
Pulse encoder evaluation, external encoder (SBP not in slot C)					07.01.02	MASTERDRIVES MC	

Frequency signal evaluation mode (P139 = 1xxx)

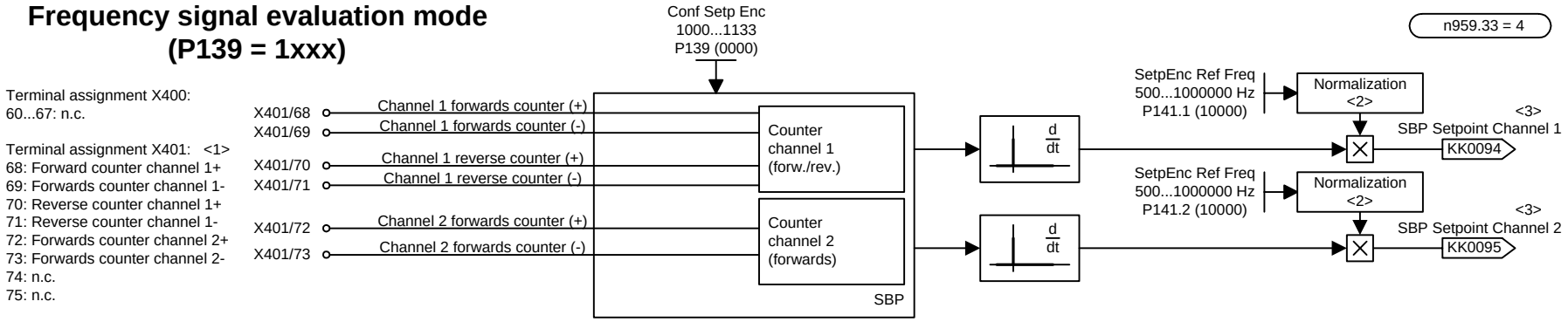

Encoder signal evaluation mode (P139 = 2xxx)

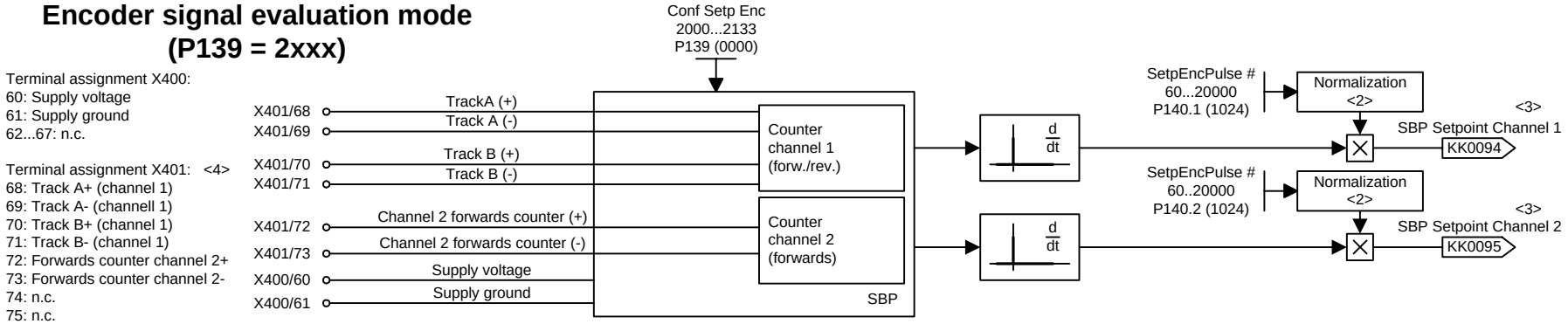

<1> maximum input frequency: 1 MHz

<2> Normalization via
- Frequency signal evaluation mode
  Frequency (frequencies stated in P141.1 and .2 correspond to the output of 100% to the connectors KK0094 and KK0095.
- Encoder signal evaluation mode
  Pulse number (pulse numbers of connected encoders stated in P140.1 and .2)
  The reference value is P353.1

<3> optional smoothing s. Function Diagram 735:

<4> maximum input frequency: 410 kHz

Setting P139:

Input level A/B track

xxx0: Channel 1 / encoder input HTL unipolar
xxx1: Channel 1 / encoder input TTL unipolar
xxx2: Channel 1 / encoder input HTL differential input
xxx3: Channel 1 / encoder input TTL / RS422

Input level zero track

xx0x: Channel 2 HTL unipolar
xx1x: Channel 2 TTL unipolar
xx2x: Channel 2 HTL differential input
xx3x: Channel 2 TTL / RS422

Mode of setpoint evaluation

0xxx: Frequency signal evaluation deactivated
1xxx: Frequency signal evaluation mode
2xxx: Encoder signal evaluation mode

Encoder power supply

X0XX: 5 V
X1XX: 15 V

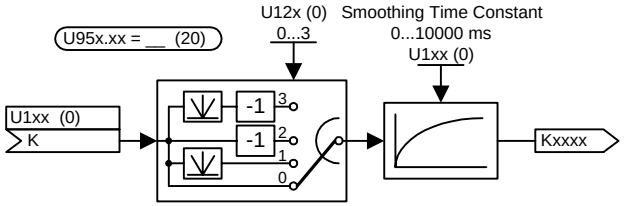

1	2	3	4	5	6	7	8
Setpoint input				V1.6	fp_mc_256_e.vsd	Function diagram	- 256 -
Setpoint input via external frequency or encoder signals with the SBP optional board					07.01.02	MASTERDRIVES MC	

Pin assignment -X424:

1 : P encoder
2 : M encoder
3 : A +
4 : A -
5 : Internal shield for 3+4
6 : B +
7 : B -
8 : Internal shield for 6+7
10 : Cycle +
12 : Cycle -
13 : + Temp
14 : Encoder sense
15 : Data +
16 : 0 V sense
17 : R +
18 : R -
19 : C +
20 : C -
21 : D +
22 : D -
23 : Data -
24 : Internal shield for 13+25
25 : - Temp
Housing: external shield

The encoder connection may neither be closed nor removed when live!
The converter must be de-energized (24 V electronics power supply disconnected and DC link fully discharged)!

U950.19 = ___(10)
Position correction/monitoring

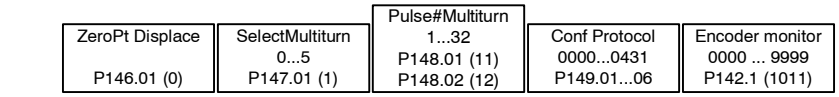

in revolutions <2>

Setting of P147:
0: No standard encoder, parameterization in P148, P149
1: Encoder EQN1325 (Heidenhain) EnDat
2: Encoder ECN1313 (Heidenhain) EnDat
6: Multiturn EnDat automatic identification
7: Encoder EQI1325 (Heidenhain) EnDat

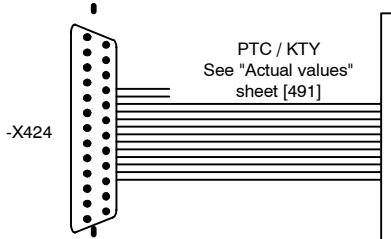

PTC / KTY
See "Actual values" sheet [491]

Multiturn encoder evaluation

Revolutions initialization → For further processing, see "Position sensing" [330]

For further processing, see "Actual values" sheet [500]

P130 = 4

Mech. Angle
KK0090 <1>

PosAbs
KK0100 → Absol. pos. from serial protocol in increments

F051 Encoder fault

B0070 MeasV valid

Setting of P142.1:
0xxx Amplitude monitoring $A^2 + B^2$ deactivated
1xxx Amplitude monitoring $A^2 + B^2$ activated

<1> Range of values = 0 ... 2^{32}-1 for one motor revolution

NOTE:
Parameter P149.02 = 1xxx should be set if the following general conditions exist:
1.) Use of EnDat absolute encoder
2.) Encoder with ratio of (singleturn resolution protocol / number of pulses per rev.) <> 4 (e. g.: EQI1325)
3.) Use of P147.01 = "6 EnDat automatic"

With this setting the protocol value is mapped in KK0100 in its full resolution.

Non-floating differential outputs

-X420/80 Track A+
-X420/81 Track A-
-X420/82 Track B+
-X420/83 Track B-
-X420/84 Zero pulse+
-X420/85 Zero pulse-

Pulse encoder simulation

to internal further processing in an SBP

Note:
The signals are not isolated from potential.
A frame connection to X101/2 must also be made.

Pulse encoder simulation
RS 422 standard

<2> Engineering note:
In the case of linear axes, the travel range must be within the range of values of the encoder. Otherwise the range must be shifted with the zero point offset.

SBM2 (6SE7090-0XX84-0FE0)

Setting of the supply voltage in volts via P145
(Maximmum value of the output voltage:
in the case of Compact units: 15 V
in the case of Compact PLUS units: 19 V
independent of parameterizing)

Volts Enc SBM2
P145.01 (5)

SBM (6SE7090-0XX84-0FD0)
2 hook switches for voltage supply of the encoder on the board:
5 V : Both switches open
7.5 V : S1 open, S2 closed
15 V : Both switches closed

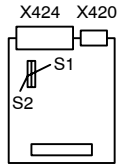

1	2	3	4	5	6	7	8
Encoder				V1.66	fp_mc_260_e.vsd	Function diagram	- 260 -
Multiturn encoder evaluation for motor encoder (SBM2 in slot C)					08.12.05	MASTERDRIVES MC	

Pin assignment -X424:

1 : P encoder
2 : M encoder
3 : A +
4 : A -
5 : Internal shield for 3+4
6 : B +
7 : B -
8 : Internal shield for 6+7
10 : Cycle +
12 : Cycle -
13 : + Temp
14 : Encoder sense
15 : Data +
16 : 0 V sense
17 : R +
18 : R -
19 : C +
20 : C -
21 : D +
22 : D -
23 : Data -
24 : Internal shield for 13+25
25 : - Temp
Housing: external shield

The encoder connection may neither be closed nor removed when live!
The converter must be de-energized (24 V electronics power supply disconnected and DC link fully discharged)!

U950.18 = ___(5)

When using position detection via external encoder (FP335), the following setting is required:
U950.18 ≤ U950.17

Setting of P147:
0: No standard encoder, parameterization in P148, P149
1: Encoder Multiturn EnDat (EQN1325 Heidenhain)
2: Encoder Multiturn EnDat (ECN1313 Heidenhain)
3: Standard Mutiturn 25 Bit SSI
4: Multiturn 21 Bit SSI
5: Singleturn 13 Bit SSI
6: Multiturn EnDat automatic identification
7: Encoder EnDat EQI1325 (Heidenhain)

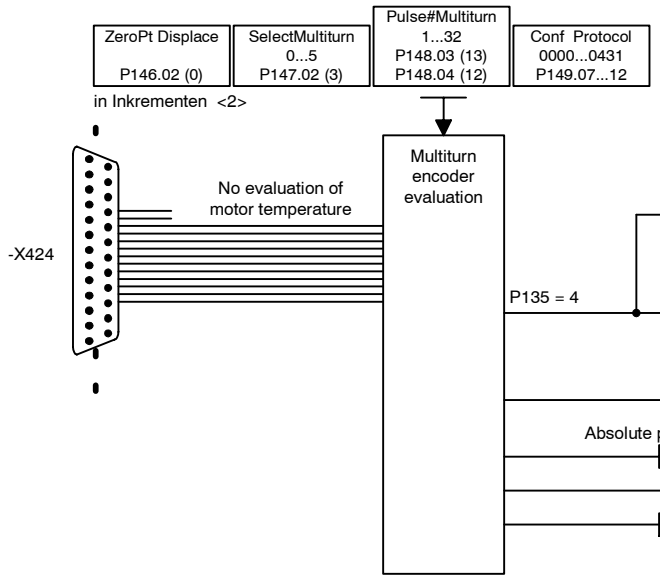

<1> Range of values = 0 ... 2^{32}-1
for one encoder revolution
KK104 is supported only when used with an external encoder with incremental tracks (sine/cosine tracks) (P135 = 4).

NOTE:
Parameter P149.08 = 1xxx should be set if the following general conditions exist:
1.) Use of EnDat absolute encoder
2.) Encoder with ratio of (singleturn resolution protocol / number of pulses per rev.) <> 4 (e. g.: EQI1325)
3.) Use of P147.02 = "6 EnDat automatic"

With this setting the protocol value is mapped in KK0106 in its full resolution.

SBM2 (6SE7090-0XX84-0FE0)

Setting of the supply voltage in volts via P145
(Maximum value of the output voltage:
in the case of Compact units: 15 V
in the case of Compact PLUS units: 19 V
independent of parameterizing)

Volts Enc SBM2
P145.02 (5)

WARNING It is not possible to evaluate the motor temperature for encoder evaluations that are not inserted in slot C.

<2> Engineering note:
In the case of linear axes, the travel range must be within the range of values of the encoder. Otherwise the range must be shifter with the zero value offset.

SBM (6SE7090-0XX84-0FD0)
2 hook switches for voltage supply of the encoder on the board:
5 V : Both switches open
7.5 V : S1 open, S2 closed
15 V : Both switches closed

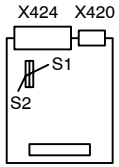

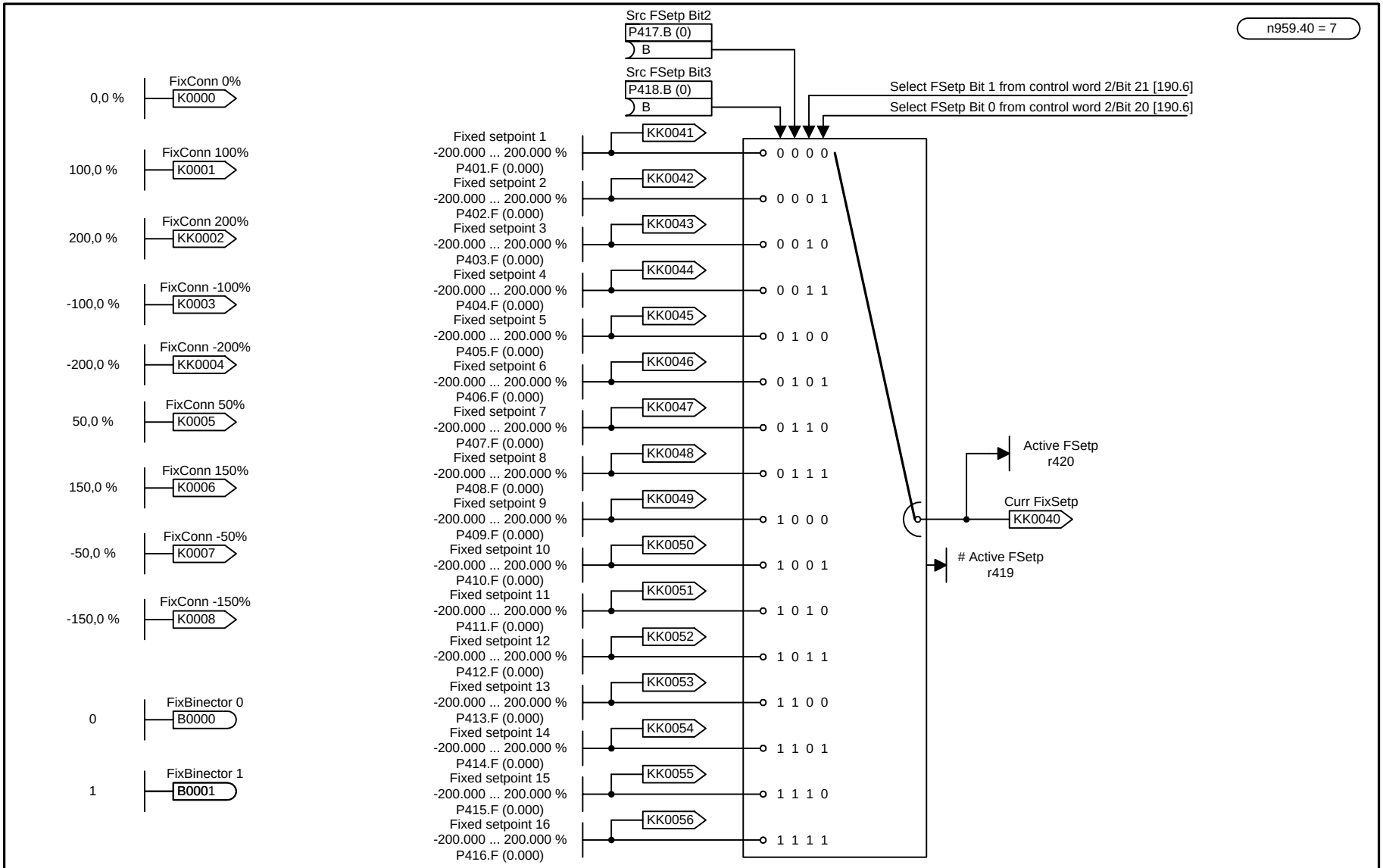

1	2	3	4	5	6	7	8
Setpoint channel				V1.6	fp_mc_290_e.vsd	Function diagram	- 290 -
Fixed setpoints					08.01.02	MASTERDRIVES MC	

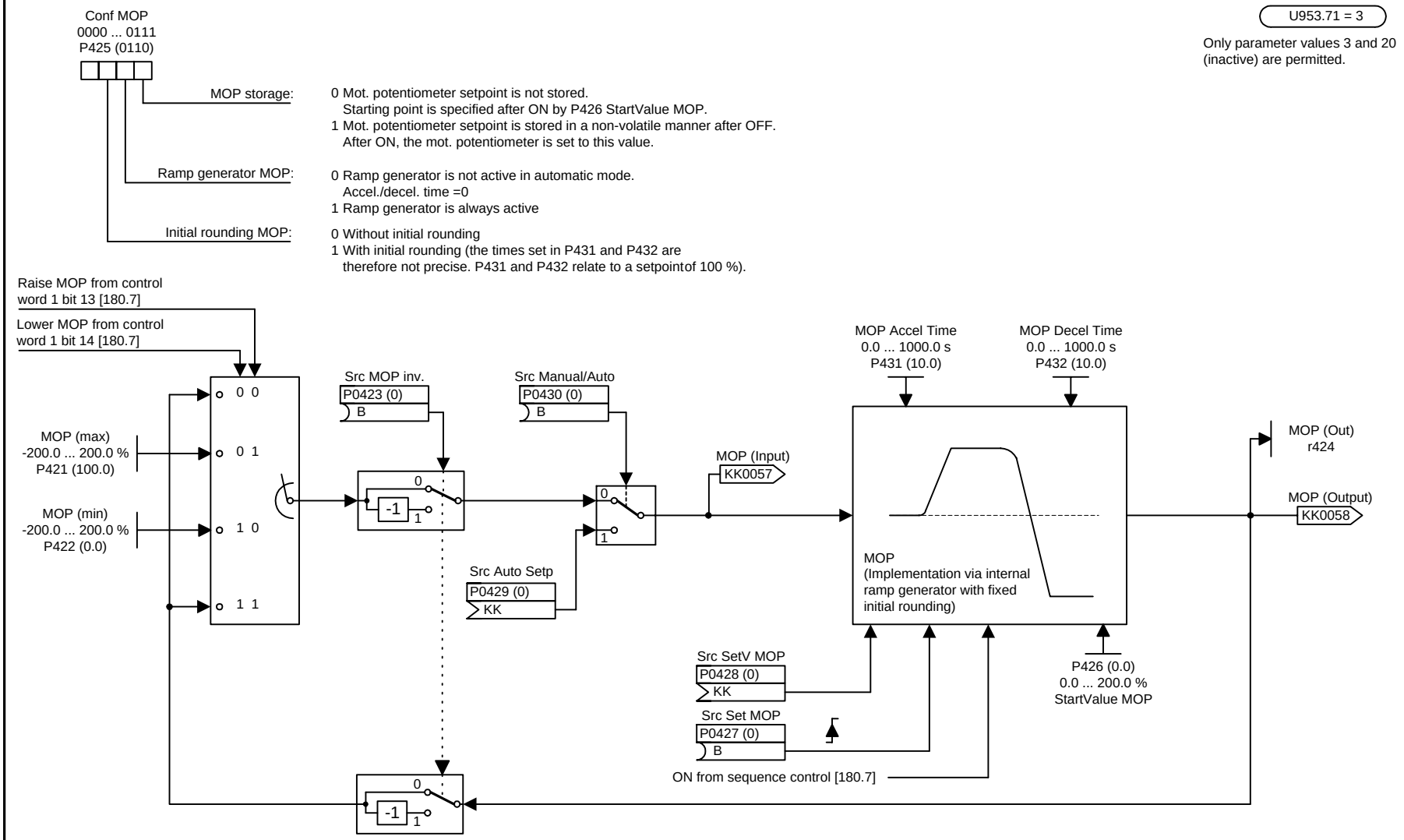

1	2	3	4	5	6	7	8
Setpoint channel				V1.6	fp_mc_300_e.vsd	Function diagram	- 300 -
Motorized potentiometer					08.01.02	MASTERDRIVES MC	

n959.42 = 2

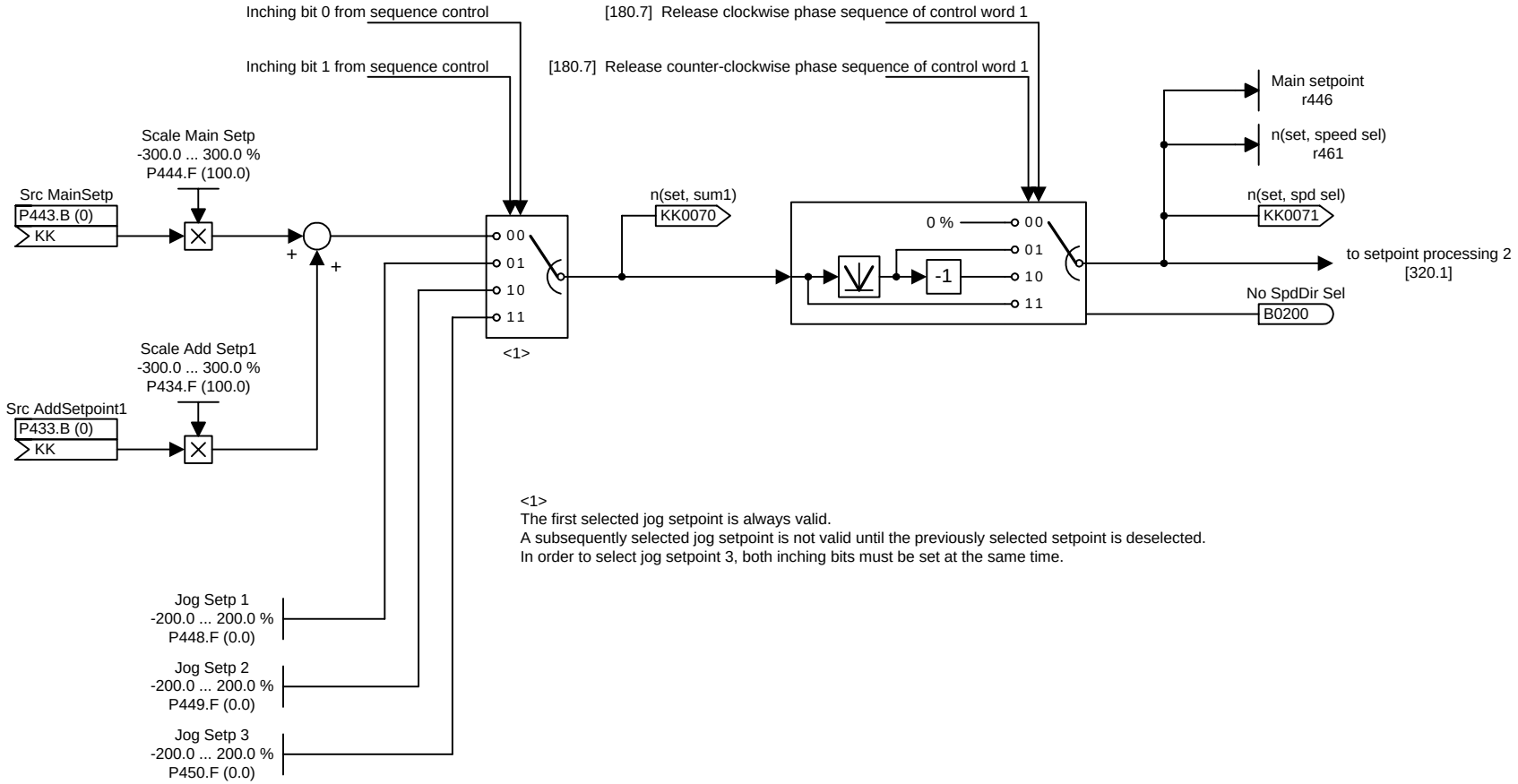

<1>
The first selected jog setpoint is always valid.
A subsequently selected jog setpoint is not valid until the previously selected setpoint is deselected.
In order to select jog setpoint 3, both inching bits must be set at the same time.

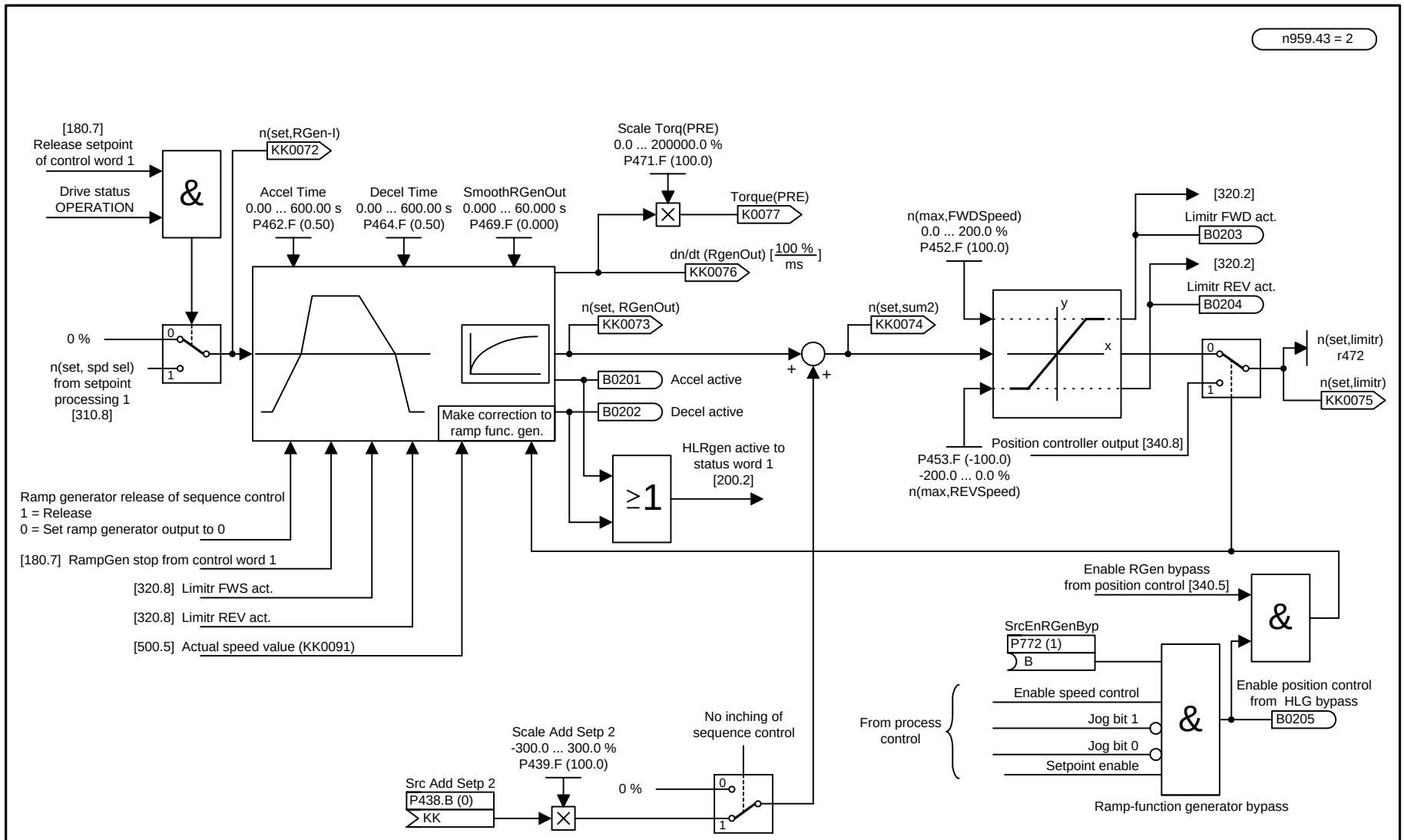

1	2	3	4	5	6	7	8
Setpoint processing				V1.6	fp_mc_320_e.vsd	Function diagram	- 320 -
Ramp-function generator					08.01.02	MASTERDRIVES MC	

n959.59 = 2

PosFixValue 1
-2^{31} ... $(2^{31}-1)$
P775.01 (0)
KK0141

PosFixValue 2
-2^{31} ... $(2^{31}-1)$
P775.02 (0)
KK0142

PosFixValue 3
-2^{31} ... $(2^{31}-1)$
P775.03 (0)
KK0143

PosFixValue 4
-2^{31} ... $(2^{31}-1)$
P775.04 (0)
KK0144

Fixed setpoint 1
-200.000 % ... 199.999 %
P776.01
KK0145

Fixed setpoint 2
-200.000 % ... 199.999 %
P776.02
KK0146

Fixed setpoint 3
-200.000 % ... 199.999 %
P776.03
KK0147

Fixed setpoint 4
-200.000 % ... 199.999 %
P776.04
KK0148

n959.44 = 3

Conversion of DSP - double words to single words with selectable gain for diagnostics purposes

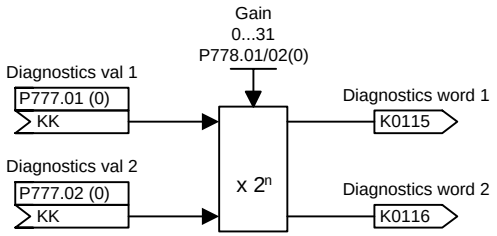

1	2	3	4	5	6	7	8
Position fixed values and fixed setpoints on the DSP				V1.6	fp_mc_325_e.vsd	Function diagram	- 325 -
					08.01.02	MASTERDRIVES MC	

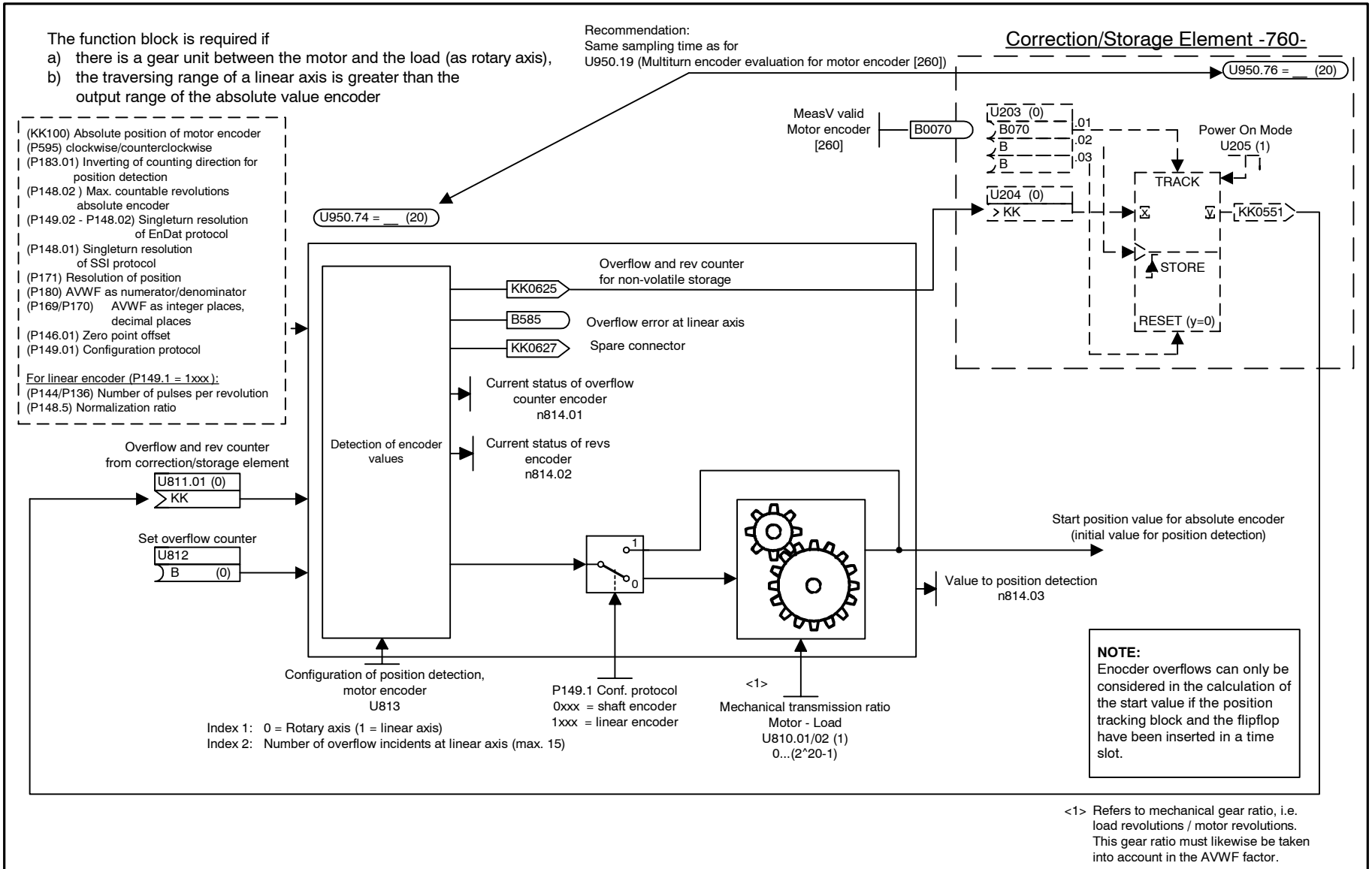
The function block is required if
a) there is a gear unit between the motor and the load (as rotary axis),
b) the traversing range of a linear axis is greater than the output range of the absolute value encoder
Recommendation:
Same sampling time as for
U950.19 (Multiturn encoder evaluation for motor encoder [260])
Correction/Storage Element -760-
U950.76 = __ (20)
U950.74 = __ (20)
MeasV valid
Motor encoder
[260]
B0070
U203 (0)
B070
B
B
.01
.02
.03
Power On Mode
U205 (1)
TRACK
U204 (0)
> KK
KK0551
STORE
RESET (y=0)
(KK100) Absolute position of motor encoder
(P595) clockwise/counterclockwise
(P183.01) Inverting of counting direction for position detection
(P148.02) Max. countable revolutions absolute encoder
(P149.02 - P148.02) Singleturn resolution of EnDat protocol
(P148.01) Singleturn resolution of SSI protocol
(P171) Resolution of position
(P180) AVWF as numerator/denominator
(P169/P170) AVWF as integer places, decimal places
(P146.01) Zero point offset
(P149.01) Configuration protocol
For linear encoder (P149.1 = 1xxx):
(P144/P136) Number of pulses per revolution
(P148.5) Normalization ratio
Detection of encoder values
KK0625
Overflow and rev counter for non-volatile storage
B585
Overflow error at linear axis
KK0627
Spare connector
Current status of overflow counter encoder n814.01
Current status of revs encoder n814.02
Overflow and rev counter from correction/storage element
U811.01 (0)
> KK
Set overflow counter
U812
) B (0)
1
0
Start position value for absolute encoder (initial value for position detection)
Value to position detection n814.03
Configuration of position detection, motor encoder U813
P149.1 Conf. protocol
0xxx = shaft encoder
1xxx = linear encoder
<1>
Mechanical transmission ratio Motor - Load
U810.01/02 (1)
0...(2^20-1)
Index 1: 0 = Rotary axis (1 = linear axis)
Index 2: Number of overflow incidents at linear axis (max. 15)
NOTE:
Enocder overflows can only be considered in the calculation of the start value if the position tracking block and the flipflop have been inserted in a time slot.
<1> Refers to mechanical gear ratio, i.e. load revolutions / motor revolutions. This gear ratio must likewise be taken into account in the AVWF factor.

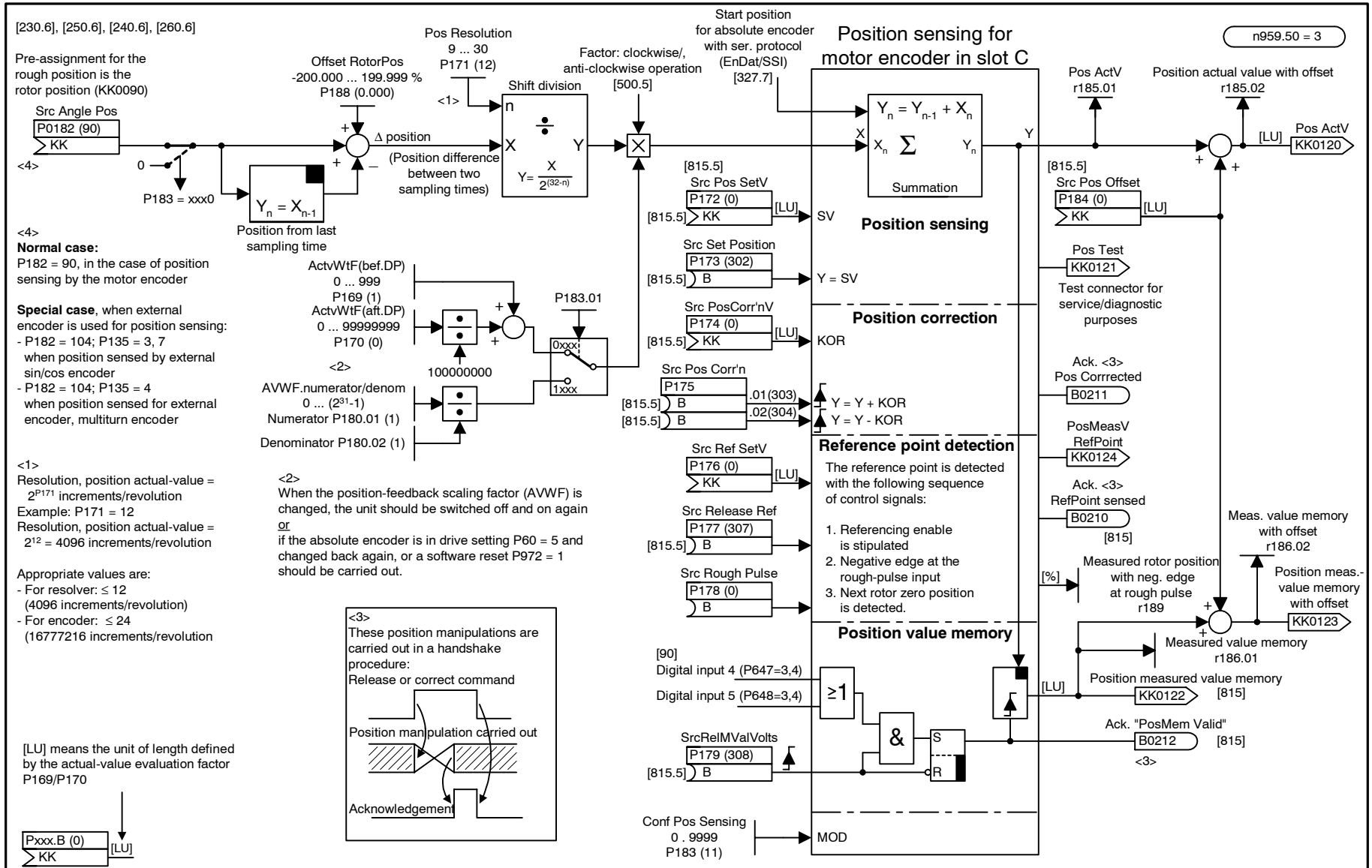

1	2	3	4	5	6	7	8
Position sensing				V1.66	fp_mc_330_e.vsd	Function diagram	- 330 -
Motor encoder in slot C					08.12.05	MASTERDRIVES MC	

P183	Configuration of position sensing	
Position of P183.01	**Value**	**Meaning**
□□□■		**Encoder sensing**
	xxx**0**	- No position sensing with motor encoder in slot C
	xxx**1**	- Release position sensing with resolver or encoder
	xxx**2**	- Release position sensing with multiturn encoder
□□■□		**Reference point detection mode**
	xx**0**x	- No reference point detection
	xx**1**x	- At the right of the rough pulse The first rotor zero position at the right of the rough pulse sets position sensing to the setting value
	xx**2**x	- The first rotor zero position at the left of rough pulse sets position sensing to the setting value
□■□□	x**0**xx	- Counting direction the same as direction of motor rotation
	x**1**xx	- Counting direction opposite to direction of motor rotation
■□□□	**0**xxx	- Input of position feedback scaling factor with components left and right of decimal
	1xxx	- Input of position feedback scaling factor as numerator/denominator
P183.02		
□□□■	xxx**0**	- Zero offset encoder Zero offset correction OFF
	xxx**1**	- Zero offset correction ON
□□■□	xx**0x**	- Reference point detection Set position to setting value
	xx**1x**	- Reference point detection Only measure position

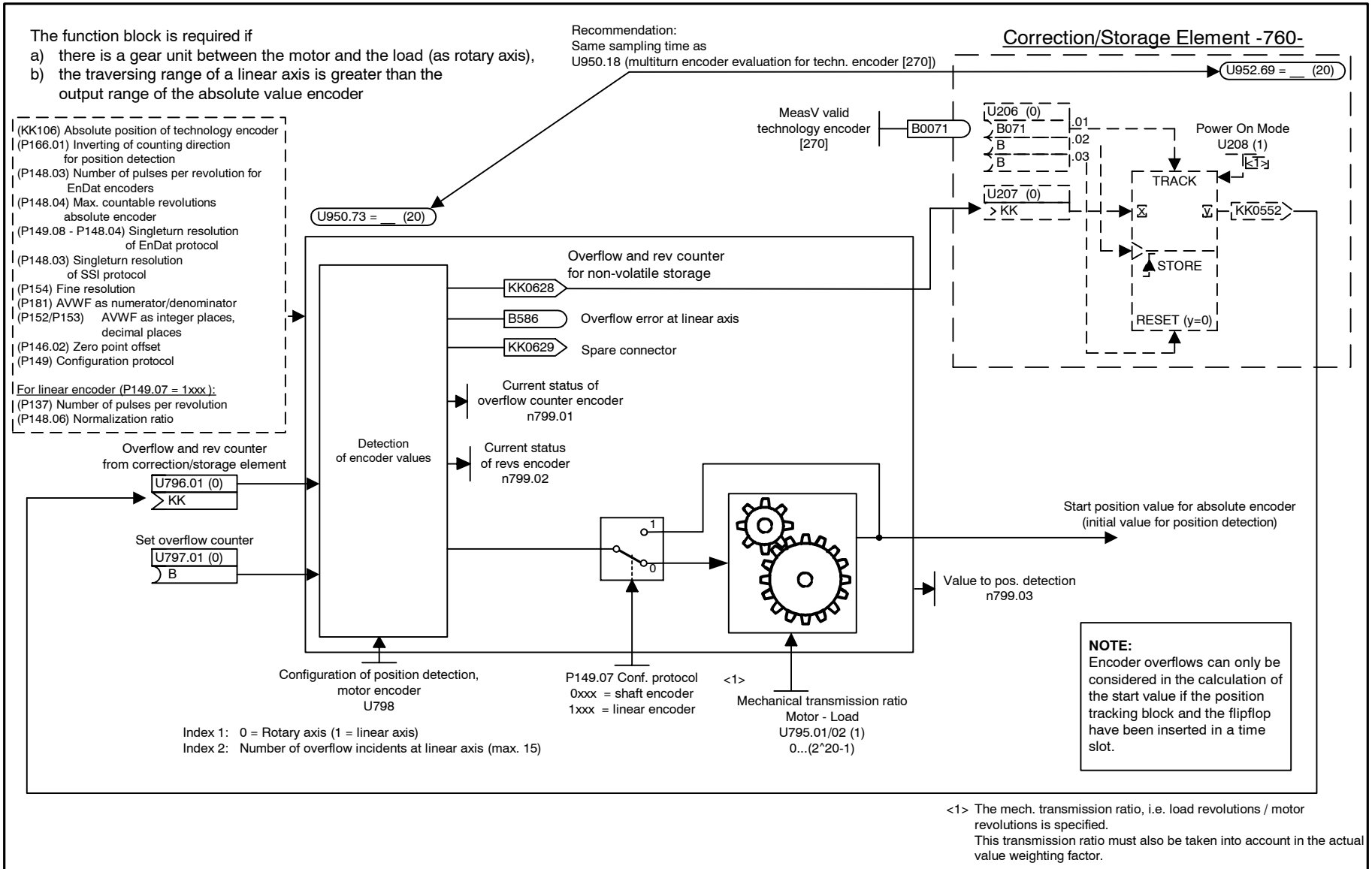

<1> The mech. transmission ratio, i.e. load revolutions / motor revolutions is specified.
This transmission ratio must also be taken into account in the actual value weighting factor.

1	2	3	4	5	6	7	8
Position detection				V1.66	fp_mc_333_e.vsd	Function diagram	- 333 -
Start position of absolute encoder with mechanical transmission ratio for a technology encoder					08.12.05	MASTERDRIVES MC	

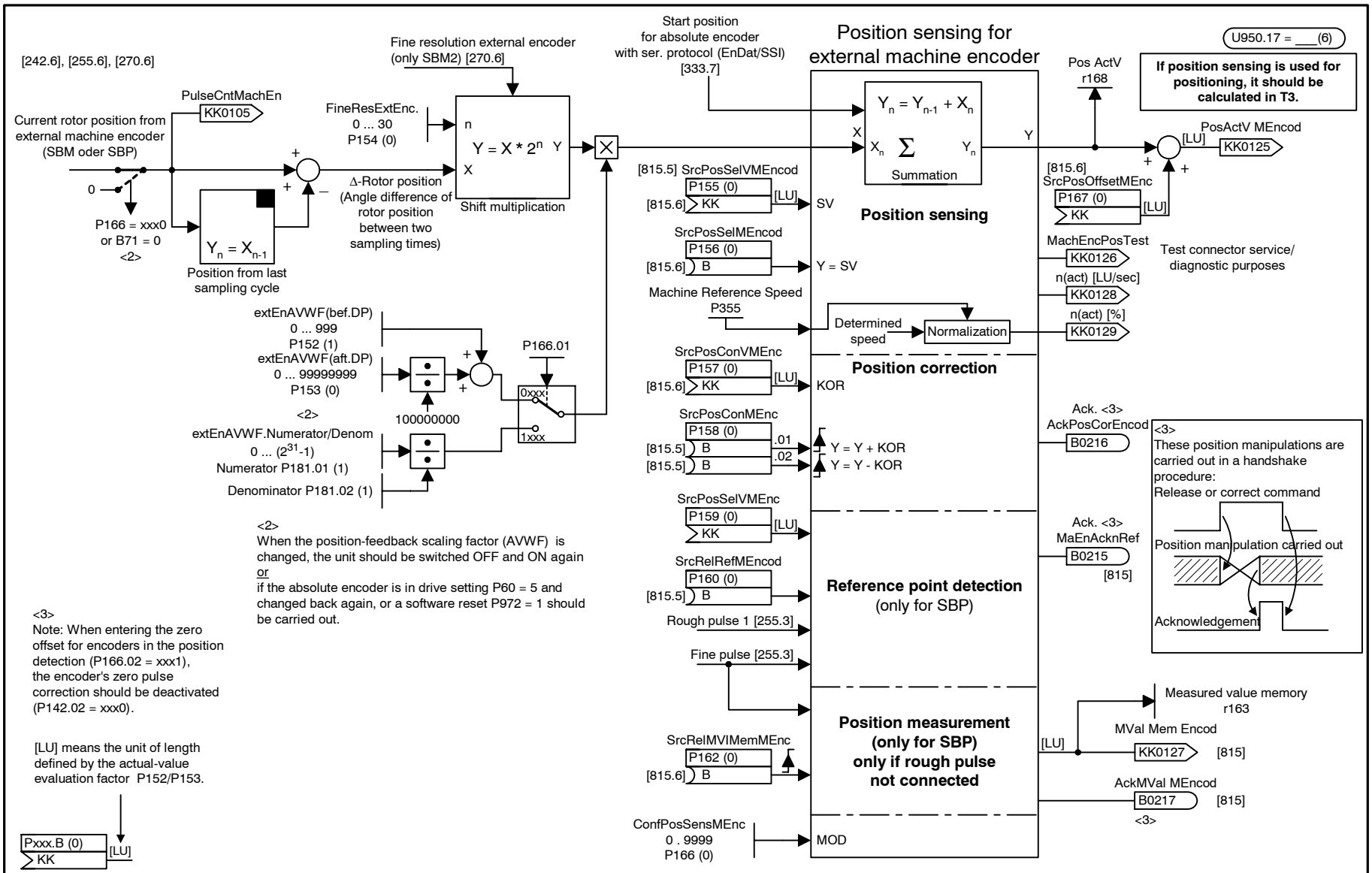

1	2	3	4	5	6	7	8
Position sensing				V1.66	fp_mc_335_e.vsd	Function diagram	- 335 -
External encoder					08.12.05	MASTERDRIVES MC	

<2> P166 Configuration of position sensing		
Position of P166	**Value**	**Meaning**
P166.01 □□□■	xxx**0** xxx**1**	**Encoder detection** - No position sensing with machine encoder (KK0125 = 0; no position measurement, no reference-point detection) - Release position sensing with motor encoder
P166.01 □□■□	xx**0**x xx**1**x xx**2**x xx**3**x	**Reference point detection mode** - No reference point detection - At the right of the rough pulse The first fine pulse at the right of the rough pulse sets the position sensing to the set value - The first fine pulse at the left of the rough pulse sets the position sensing to the set value - Reference point detection, fine pulse only
P166.01 □■□□	x**0**xx x**1**xx	- Counting direction encoder detection positive - Counting direction encoder detection negative
P166.01 ■□□□	**0**xxx **1**xxx	- Input of position-feedback scaling factor with component at left/right of decimal point - Input of pos-fback scal factor as num/denom
P166.02 □□□■	xxx**0** xxx**1**	**Zero point offset encoder** disregarded (zero point offset correction deactivated) **Zero point offset encoder** include in postion actual value calculation (zero point offset correction activated) <3>

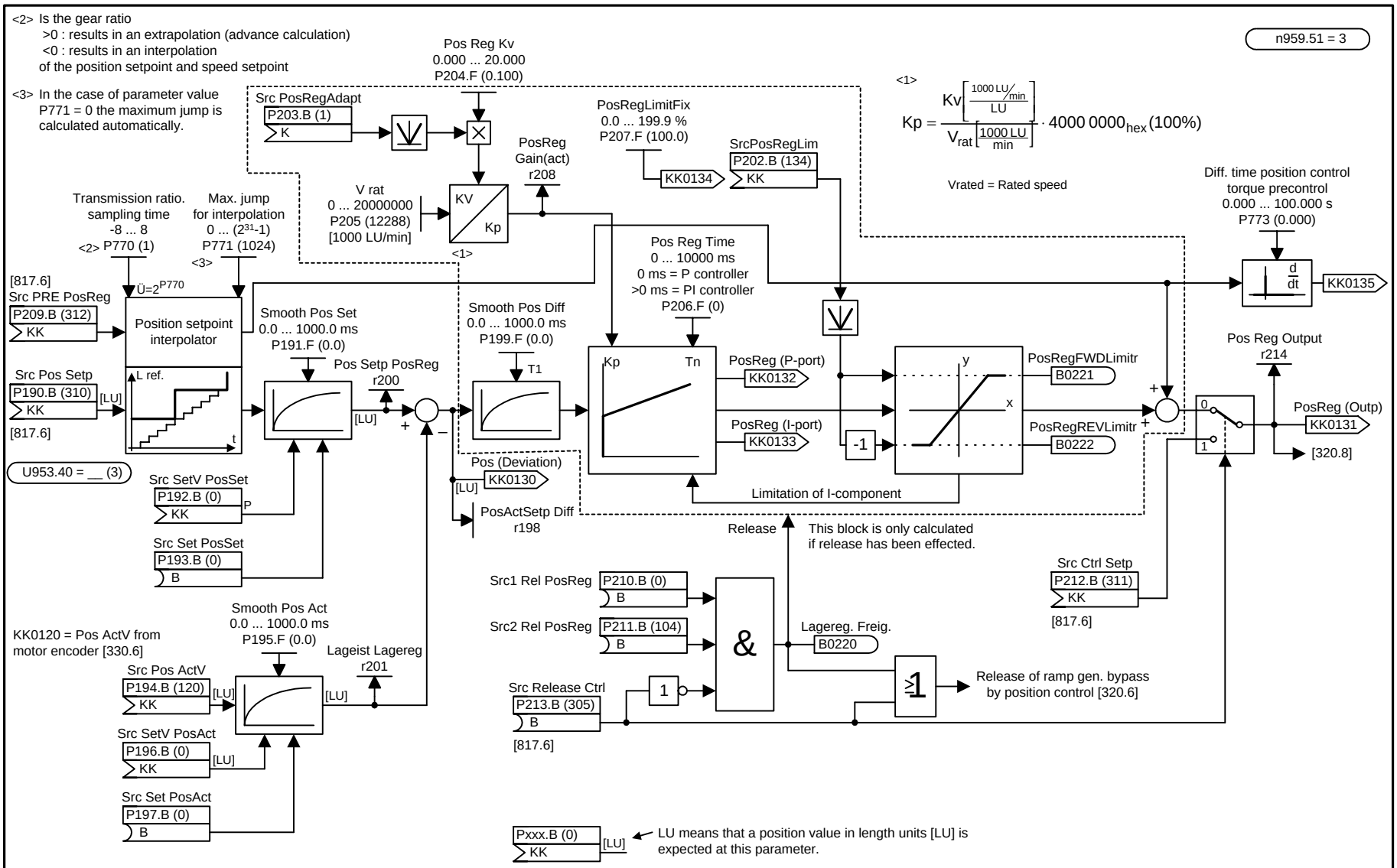

1	2	3	4	5	6	7	8
Position control				V1.6	fp_mc_340_e.vsd	Function diagram	- 340 -
					24.10.01	MASTERDRIVES MC	

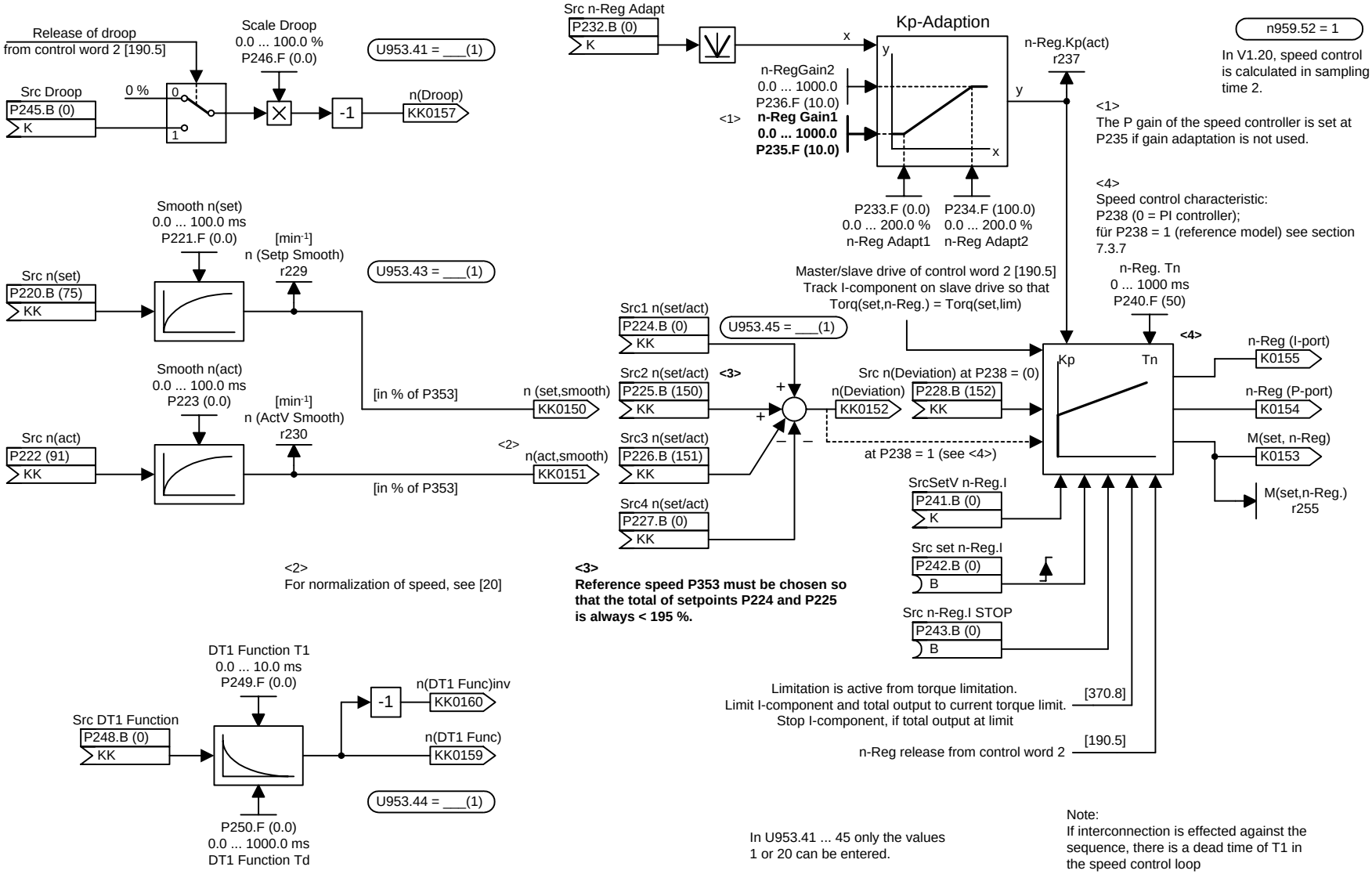
Release of droop
from control word 2 [190.5]
Scale Droop
0.0 ... 100.0 %
P246.F (0.0)
U953.41 = ___(1)
Src Droop
P245.B (0)
K
0 %
0
1
-1
n(Droop)
KK0157
Src n-Reg Adapt
P232.B (0)
K
Kp-Adaption
x
y
n-Reg.Kp(act)
r237
n-RegGain2
0.0 ... 1000.0
P236.F (10.0)
<1>
n-Reg Gain1
0.0 ... 1000.0
P235.F (10.0)
P233.F (0.0)
0.0 ... 200.0 %
n-Reg Adapt1
P234.F (100.0)
0.0 ... 200.0 %
n-Reg Adapt2
n959.52 = 1
In V1.20, speed control is calculated in sampling time 2.
<1>
The P gain of the speed controller is set at P235 if gain adaptation is not used.
<4>
Speed control characteristic:
P238 (0 = PI controller);
für P238 = 1 (reference model) see section 7.3.7
Smooth n(set)
0.0 ... 100.0 ms
P221.F (0.0)
[min-1]
n (Setp Smooth)
r229
Src n(set)
P220.B (75)
KK
U953.43 = ___(1)
Master/slave drive of control word 2 [190.5]
Track I-component on slave drive so that
Torq(set,n-Reg.) = Torq(set,lim)
n-Reg. Tn
0 ... 1000 ms
P240.F (50)
Src1 n(set/act)
P224.B (0)
KK
U953.45 = ___(1)
Kp
Tn
<4>
n-Reg (I-port)
K0155
n-Reg (P-port)
K0154
M(set, n-Reg)
K0153
M(set,n-Reg.)
r255
Smooth n(act)
0.0 ... 100.0 ms
P223 (0.0)
[min-1]
n (ActV Smooth)
r230
Src n(act)
P222 (91)
KK
[in % of P353]
n (set,smooth)
KK0150
Src2 n(set/act)
<3>
P225.B (150)
KK
Src n(Deviation) at P238 = (0)
n(Deviation)
KK0152
P228.B (152)
KK
at P238 = 1 (see <4>)
<2>
n(act,smooth)
KK0151
[in % of P353]
Src3 n(set/act)
P226.B (151)
KK
Src4 n(set/act)
P227.B (0)
KK
SrcSetV n-Reg.I
P241.B (0)
K
Src set n-Reg.I
P242.B (0)
B
Src n-Reg.I STOP
P243.B (0)
B
<2>
For normalization of speed, see [20]
<3>
Reference speed P353 must be chosen so that the total of setpoints P224 and P225 is always < 195 %.
Limitation is active from torque limitation.
Limit I-component and total output to current torque limit.
Stop I-component, if total output at limit
[370.8]
n-Reg release from control word 2
[190.5]
DT1 Function T1
0.0 ... 10.0 ms
P249.F (0.0)
n(DT1 Func)inv
KK0160
-1
Src DT1 Function
P248.B (0)
KK
n(DT1 Func)
KK0159
U953.44 = ___(1)
P250.F (0.0)
0.0 ... 1000.0 ms
DT1 Function Td
In U953.41 ... 45 only the values
1 or 20 can be entered.
Note:
If interconnection is effected against the sequence, there is a dead time of T1 in the speed control loop
(e. g. KK0152 -> P252, KK1058 -> P228)

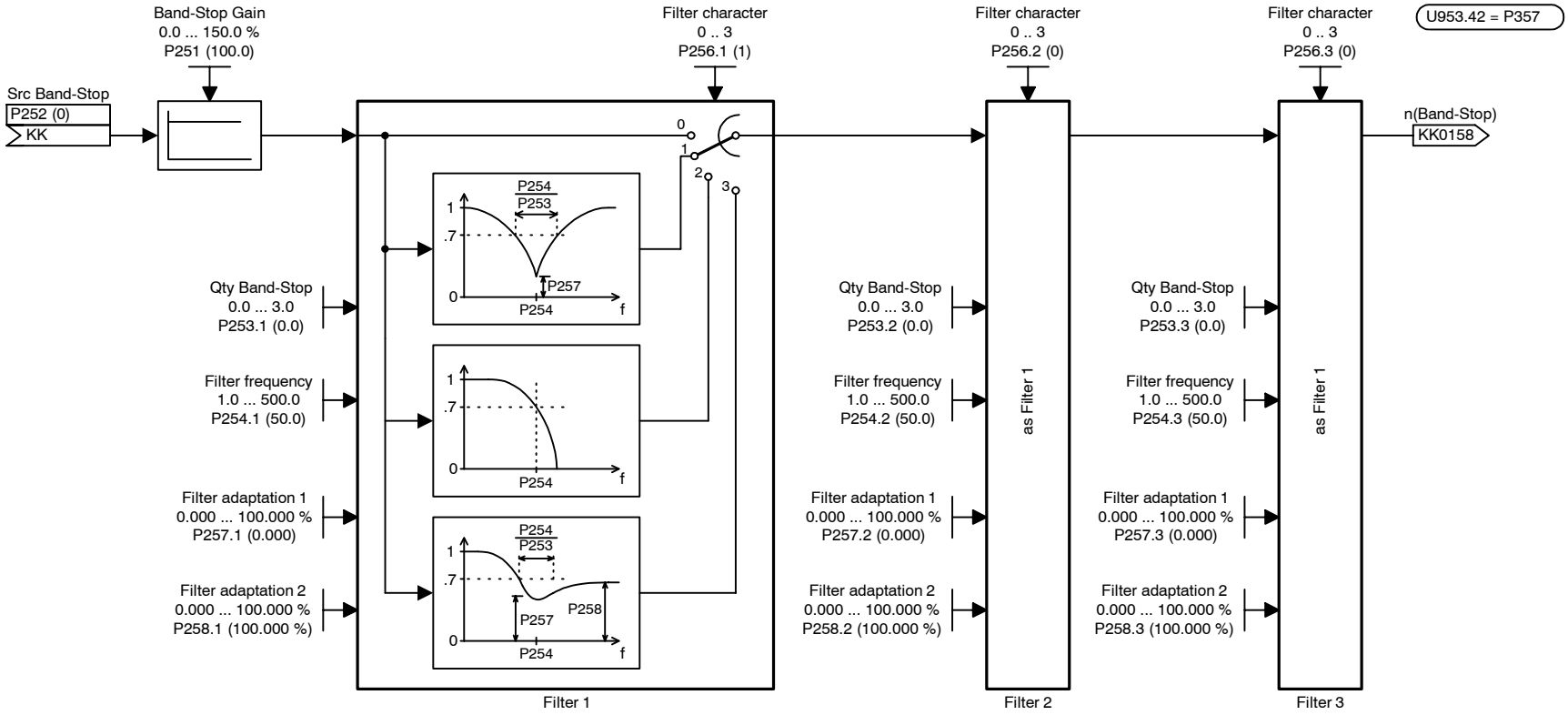

Please keep in mind that the resolution of the output variable diminishes as a smaller and smaller filter frequency (P254) is selected.
This effect does not disturb as much if the filters are connected
- to the system deviation of the speed controller at P238 = 0 (PI controller)
  (P252 = KK0152, P228 = KK0158)
- or to the output of the speed controller at P238 = 1 (reference model)
  (P252 = K0153 , P260 = KK0158).

In addition, the calculation sequence must be adapted in both cases
(e.g. U963.42 = 5, U963.43 = 2, U963.45 = 3).

Only values in the range of 1 to 20 may be entered in U953.41...45.

The diagrams show examples of typical filter amplitude responses. The exact bode diagram depends on the chosen parameters.

Transfer function for filter with 2nd order numerator denominator polynomial for P256 = 1/3 :

$$F = \frac{1 + s\frac{2\,d_Z}{\omega_Z} + \frac{s^2}{\omega_Z^2}}{1 + s\frac{2\,d_N}{\omega_N} + \frac{s^2}{\omega_N^2}}$$

$s = j\omega$

$\omega_Z = 2\pi \cdot P254$

$\omega_N = \sqrt{P258} \cdot \omega_Z$, $\omega_N = \omega_Z$, for P256 = 1

$d_Z = \frac{1}{2} \cdot \frac{P257}{P253}$

$d_N = \frac{1}{2 \cdot P253}$

1	2	3	4	5	6	7	8
Speed filter				V1.66	fp_mc_361_e.vsd	Function diagram	- 361 -
					08.12.05	MASTERDRIVES MC	

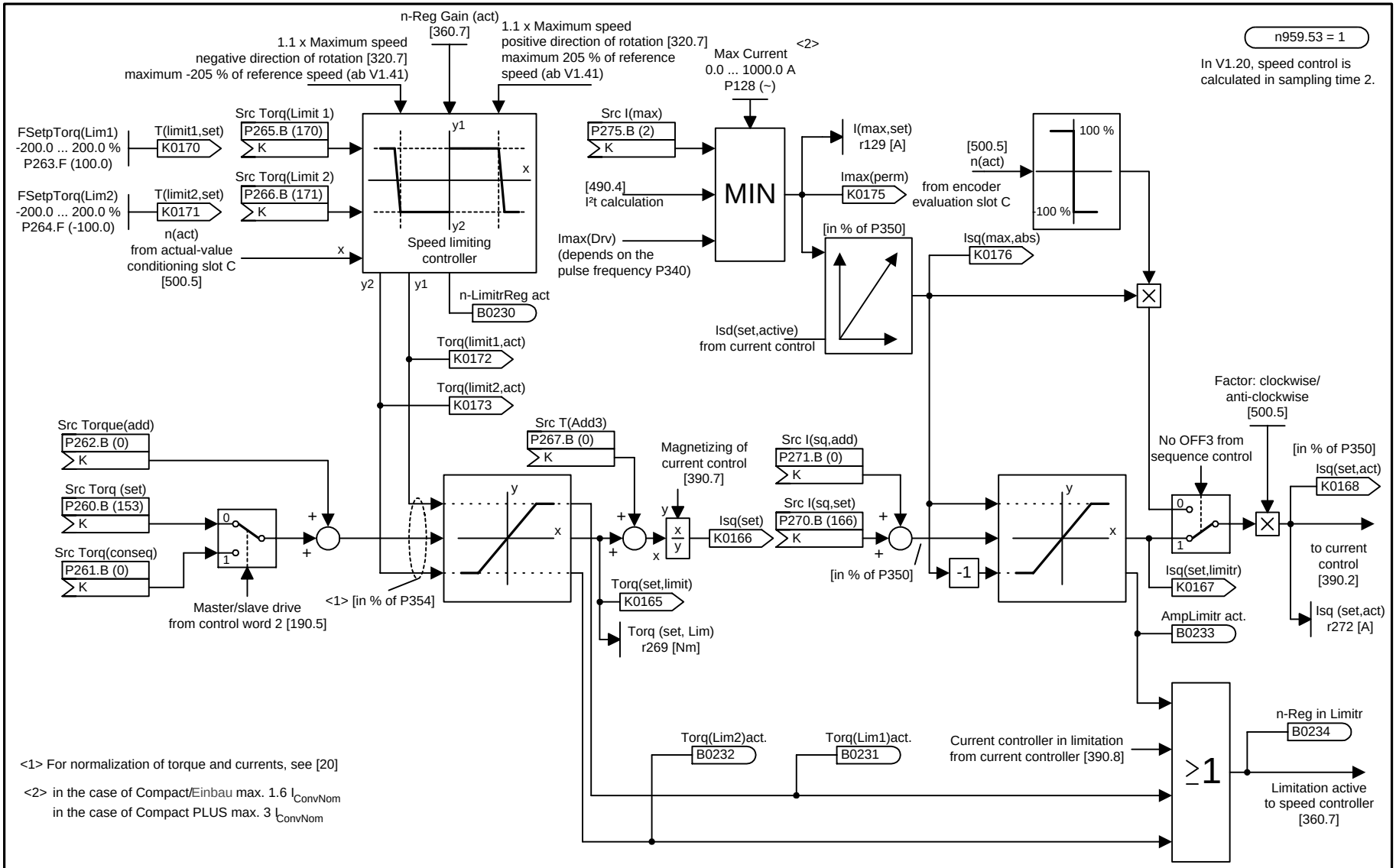

<1> For normalization of torque and currents, see [20]

<2> in the case of Compact/Einbau max. 1.6 $I_{ConvNom}$
in the case of Compact PLUS max. 3 $I_{ConvNom}$

1	2	3	4	5	6	7	8
Torque limitation				V1.6	fp_mc_370_e.vsd	Function diagram	- 370 -
					14.11.01	MASTERDRIVES MC	

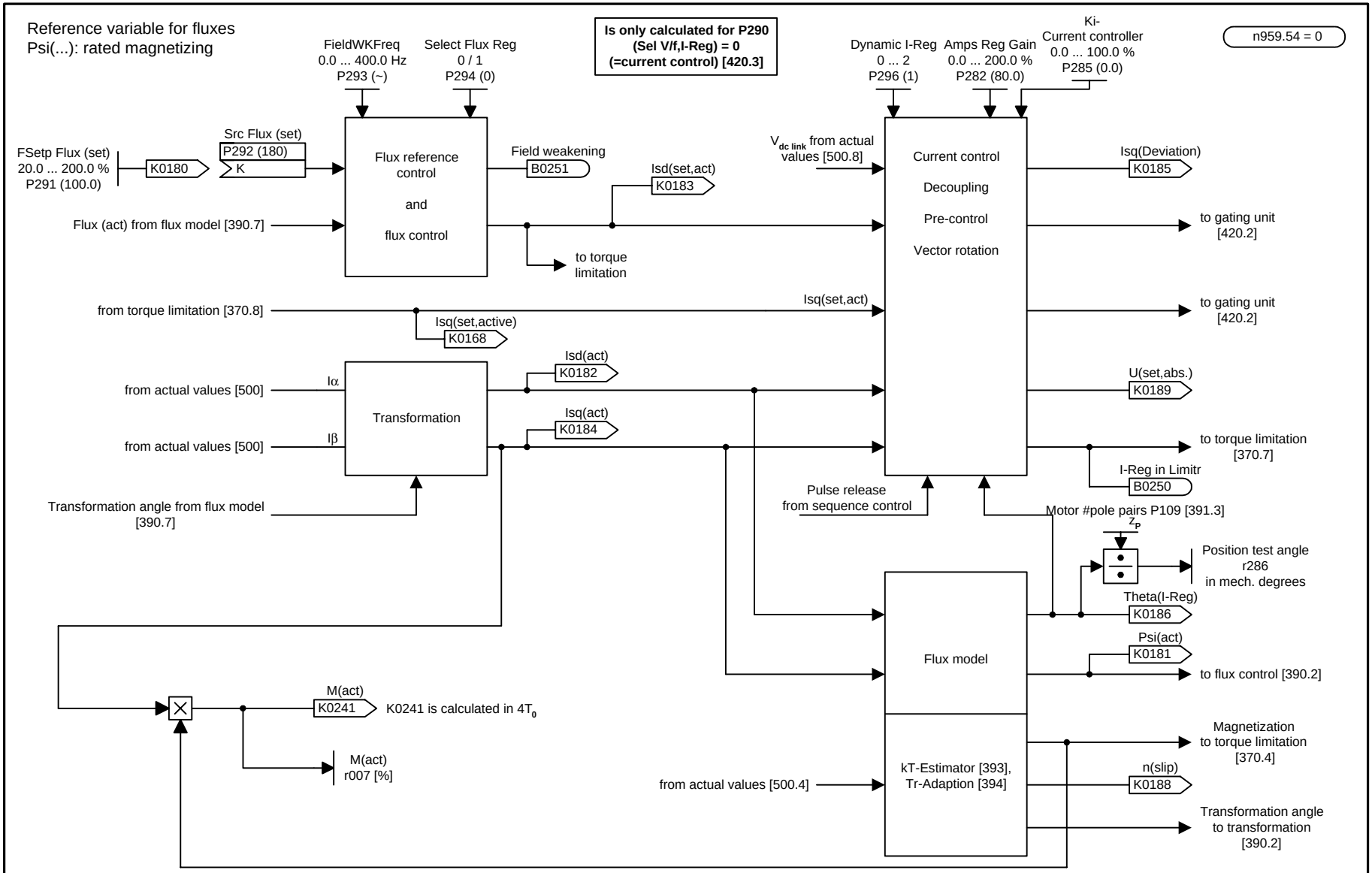

1	2	3	4	5	6	7	8
Current controller 1				V1.6	fp_mc_390_e.vsd	Function diagram	- 390 -
					08.01.02	MASTERDRIVES MC	

Select Mot Type 0 ... 4 P095 (1)	Select1FT6/1FK6 0 ... 180 P096 (0)	Select1PH7 0 ... 72 P097 (0)		
Mot Rtd Volts 100 ... 1000 V P101 (400)	Mot Rtd Amps 0.00 ... 600.00 A P102 (~)	Mot No Load Amps 0.00 ... 600.00 A P103 (~)	MotPwrFactor 0.500 ... 0.990 P104 (~)	Mot Rtd Freq 10.0 ... 400.0 Hz P107 (50)
Mot Rtd Speed 0 ... 12000 1/min P108 (3000)	Motor #PolePairs 1 ... 66 P109 (2)	Ls = f(isd) 0.1...6553.5 % P111.1 to .10	Mot Rtd Torque 0.00...6535.00 Nm P113 (~)	
Ratio Lq/Ld 0.2 ... 5.0 P119 (~)	Main Field Induc 0.0 ... 2000.0 mH P120 (~)	Stator Resist 0 ... 50000 mΩ P121 (~)	Tot Leak React 0 ... 65535 mΩ P122 (~)	Stator React 0.00 ... 655.00 Ω P123 (~)
Rotor TimeConst 0 ... 10000 ms P124 (~)	Select MotEncod 1 ... 7 P130 [500]			

P095 Select Mot Type:
0 No motor selected
1 1FT6/1FK6
2 1PA6/1PL6/1PH4/1PH7
3 Synchronous motor, general
4 Induction motor, general

Applies only to synchronous motors
(P95=1 or P95=3)

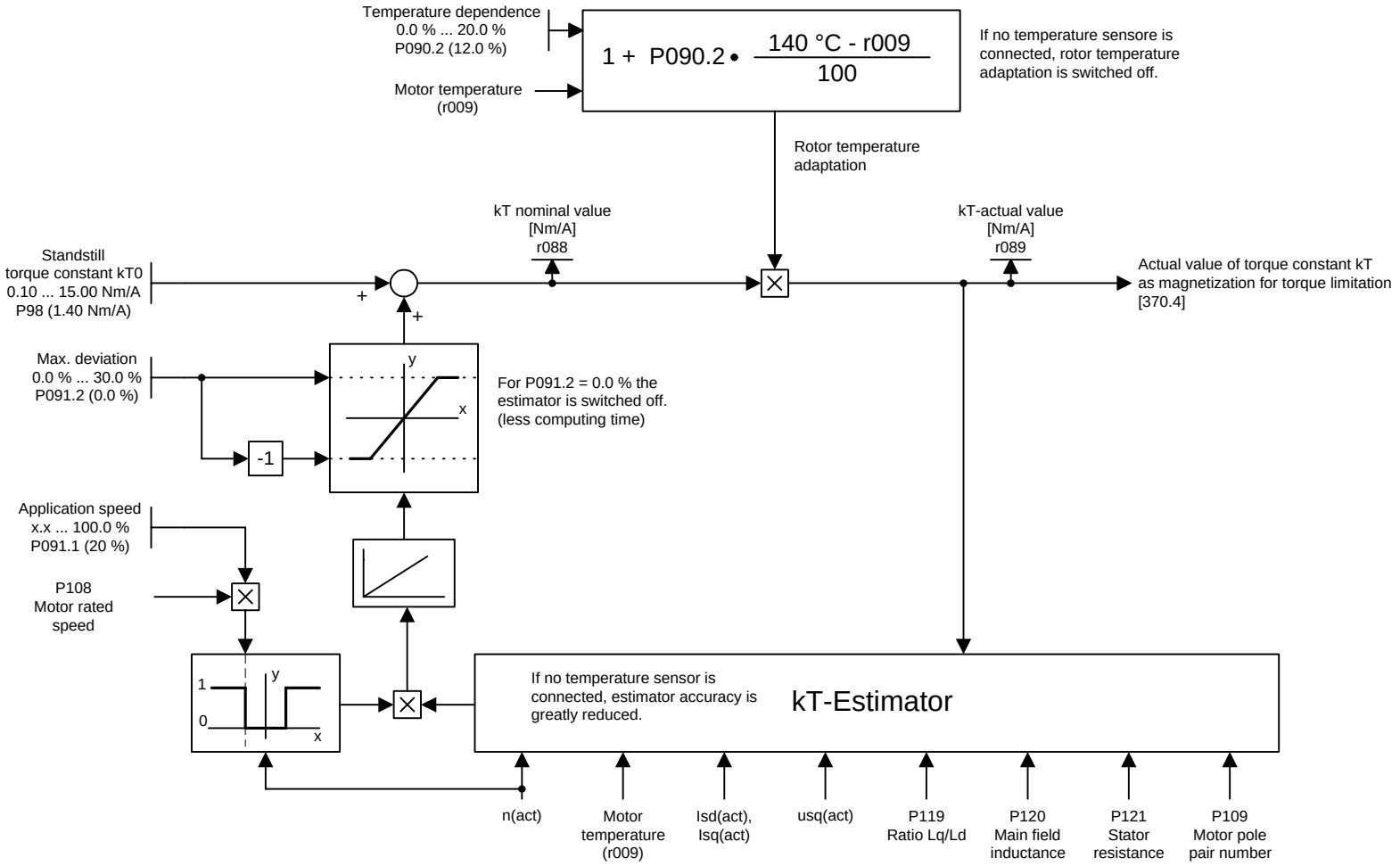

1	2	3	4	5	6	7	8
Adaptation of torque constant in the case of synchronous motors				V1.6	fp_mc_393_e.vsd	Function diagram	- 393 -
					08.01.02	MASTERDRIVES MC	

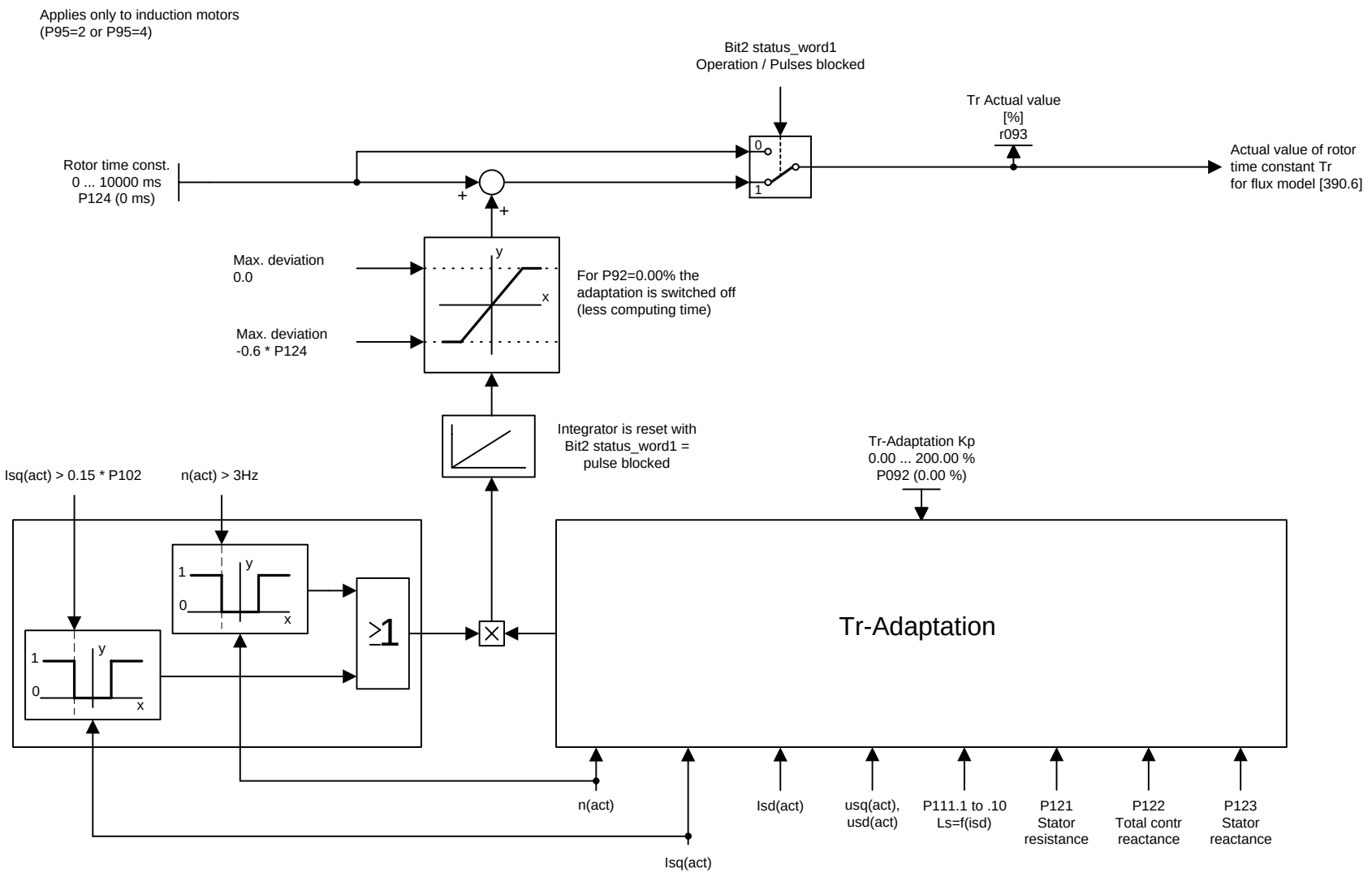

1	2	3	4	5	6	7	8
Tr-Adaptation for asynchronous machines				V1.6	fp_mc_394_e.vsd	Function diagram	- 394 -
					08.01.02	MASTERDRIVES MC	

U953.46 = ___(20)

Only value 1 or 20 can be entered .
1 = Function is calculated in T1.
20 = Function is not calculated.

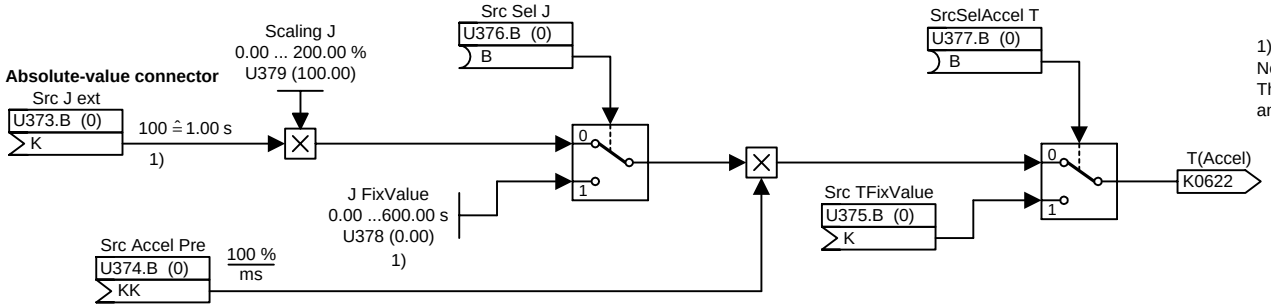

1)
Note regarding the setting of the moment of inertia (U373, U378):
The moment of inertia has to be normalized to the reference speed and reference torque.

$$J_{norm.}[s] = J[kg \cdot m^2] \cdot \frac{n[Hz]}{M[Nm]}$$

U389 = 0: Mode with scaled moment of inertia in s

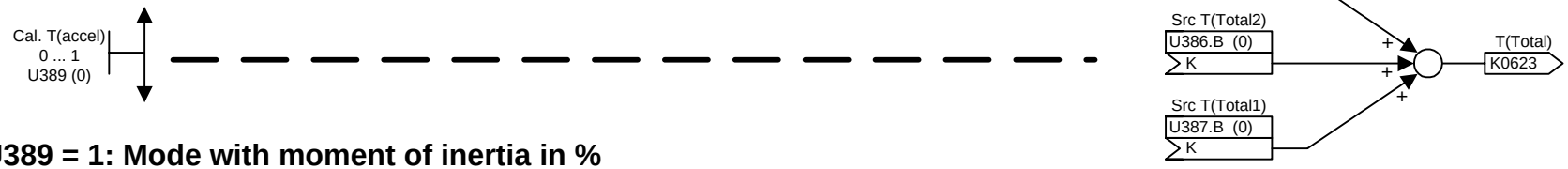

U389 = 1: Mode with moment of inertia in %

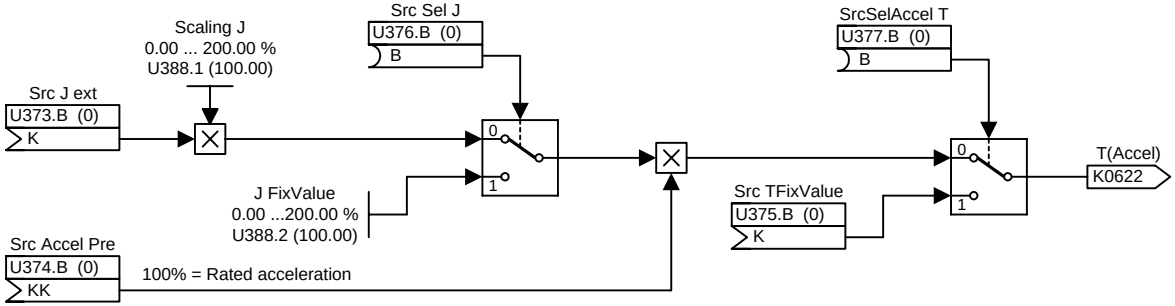

1	2	3	4	5	6	7	8
Calculation of the acceleration torque				V1.6	fp_mc_398_e.vsd	Function diagram	- 398 -
					08.01.02	MASTERDRIVES MC	

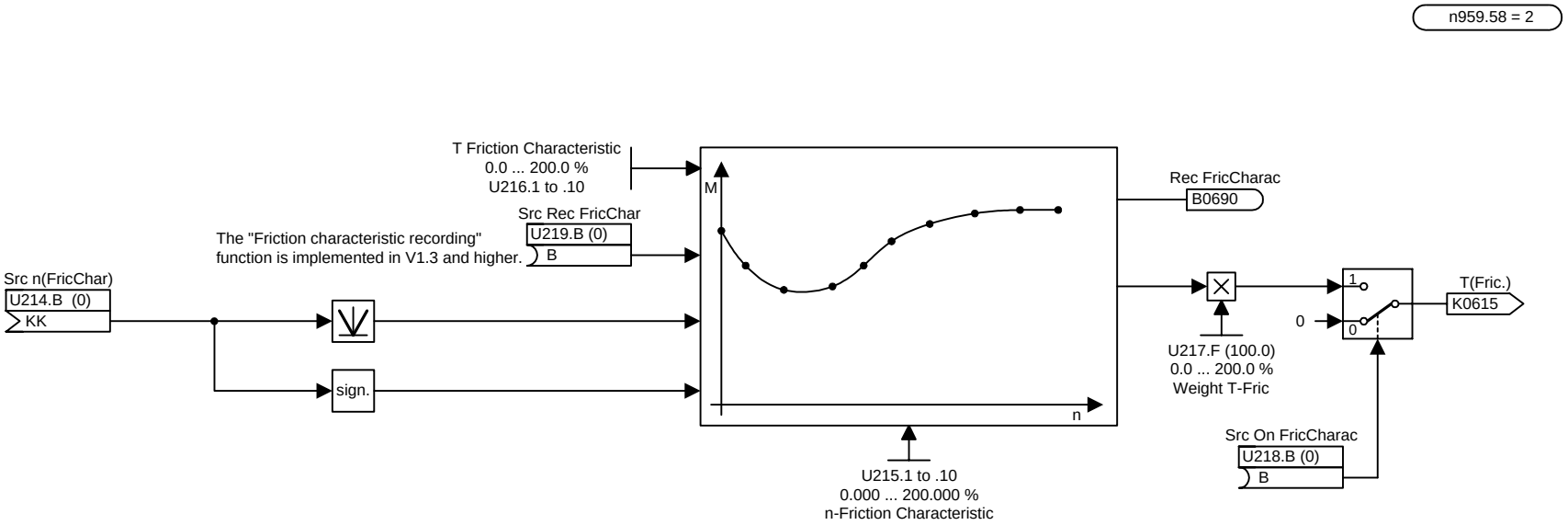

1	2	3	4	5	6	7	8
Friction characteristic				V1.6	fp_mc_399_e.vsd	Function diagram	- 399 -
					08.01.02	MASTERDRIVES MC	

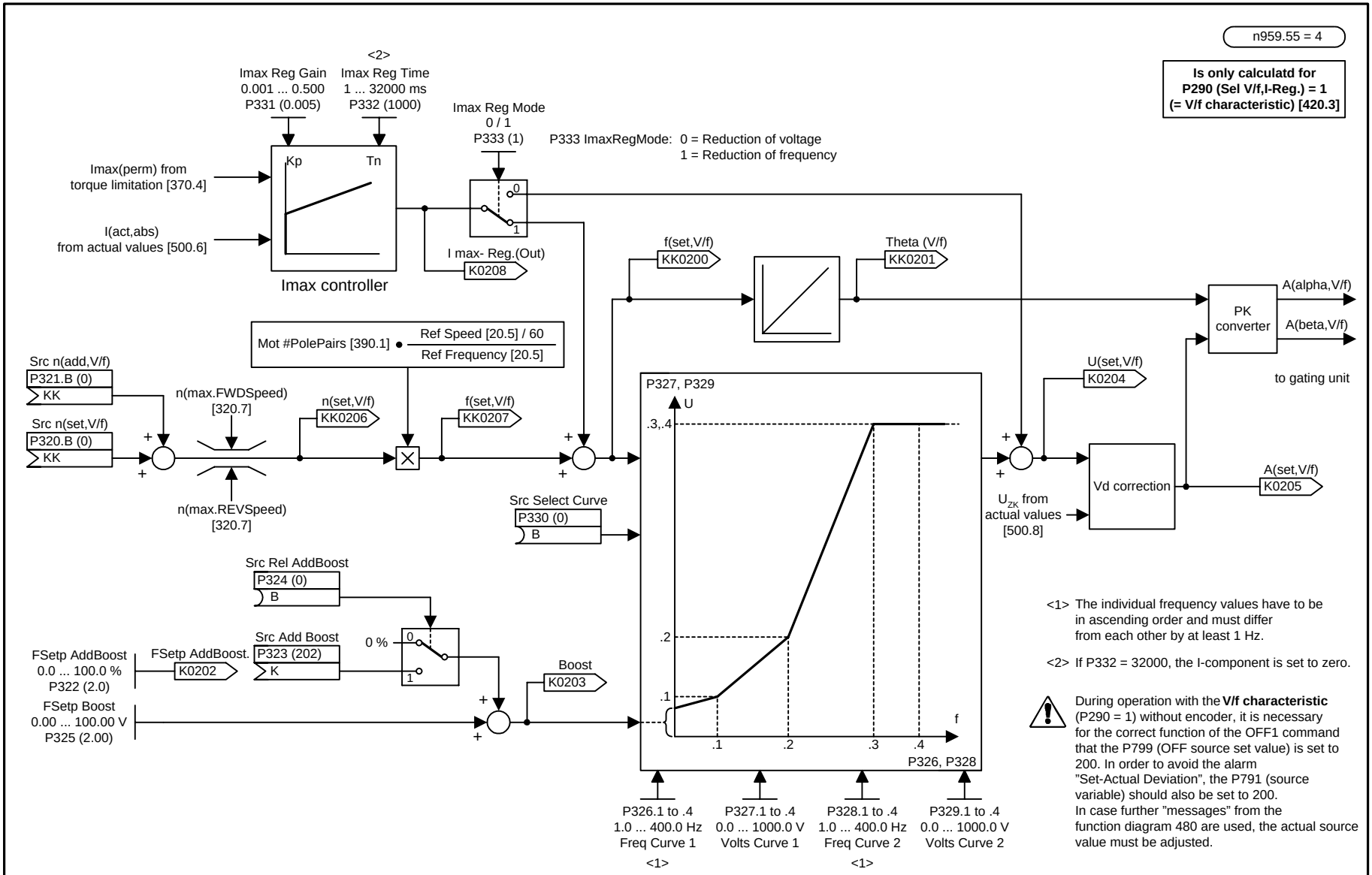

<1> The individual frequency values have to be in ascending order and must differ from each other by at least 1 Hz.

<2> If P332 = 32000, the I-component is set to zero.

During operation with the **V/f characteristic** (P290 = 1) without encoder, it is necessary for the correct function of the OFF1 command that the P799 (OFF source set value) is set to 200. In order to avoid the alarm "Set-Actual Deviation", the P791 (source variable) should also be set to 200. In case further "messages" from the function diagram 480 are used, the actual source value must be adjusted.

n959.56 = 0

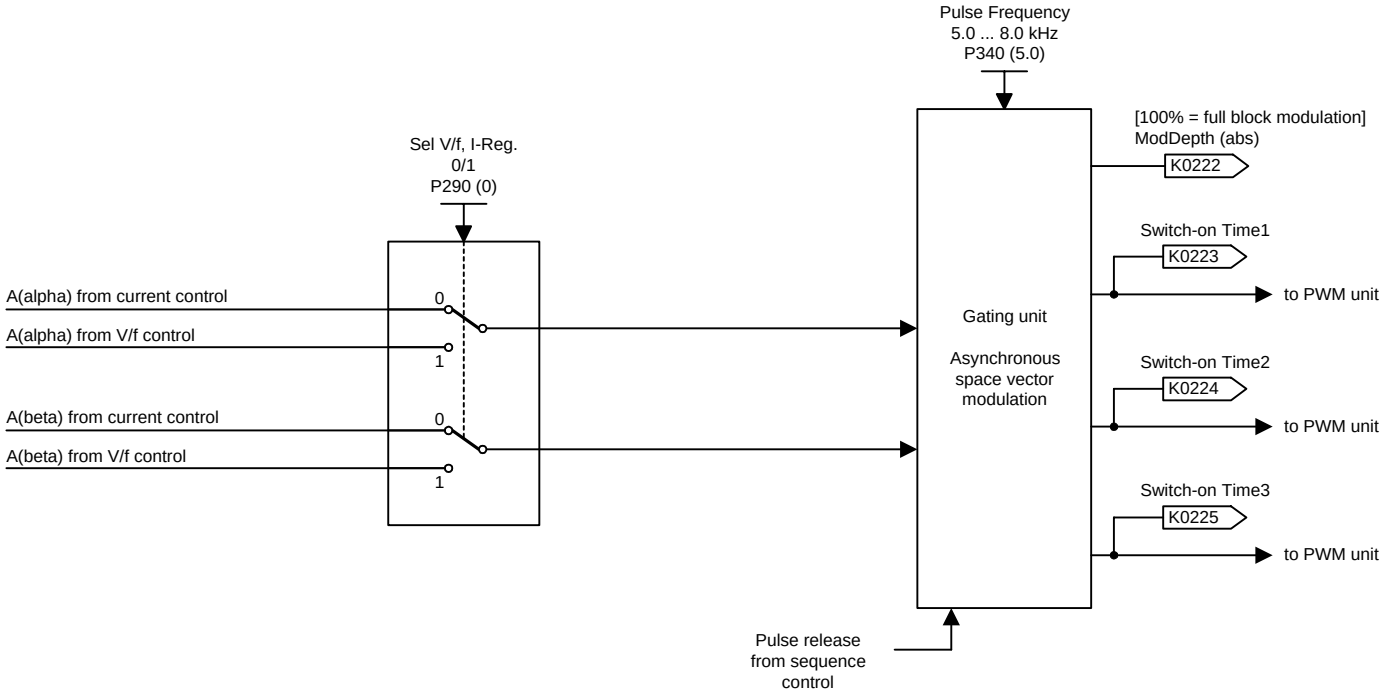
Pulse Frequency
5.0 ... 8.0 kHz
P340 (5.0)
Sel V/f, I-Reg.
0/1
P290 (0)
A(alpha) from current control
A(alpha) from V/f control
A(beta) from current control
A(beta) from V/f control
0
1
0
1
Gating unit
Asynchronous
space vector
modulation
[100% = full block modulation]
ModDepth (abs)
K0222
Switch-on Time1
K0223
to PWM unit
Switch-on Time2
K0224
to PWM unit
Switch-on Time3
K0225
to PWM unit
Pulse release
from sequence
control

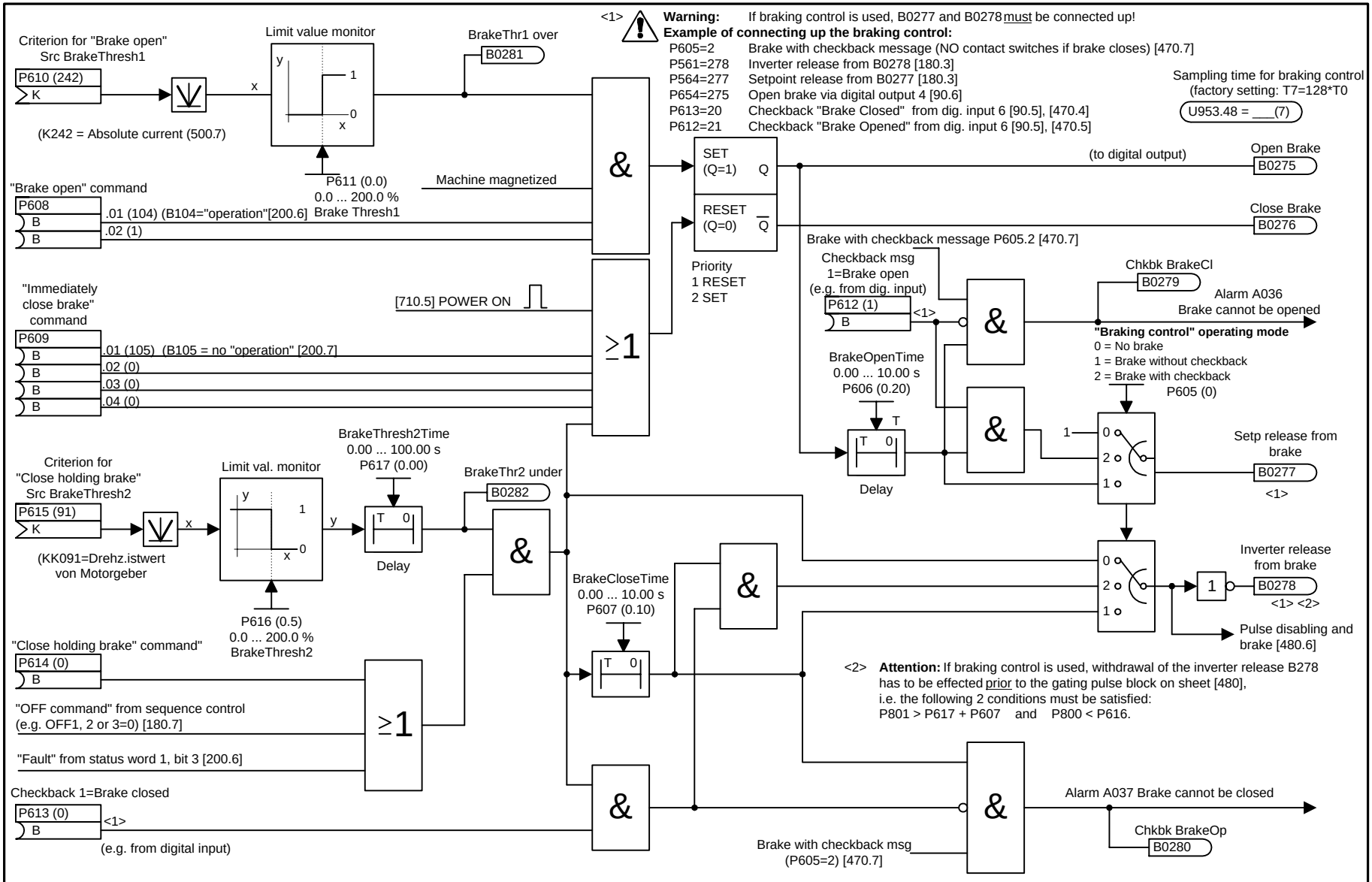

1	2	3	4	5	6	7	8
Braking control				V1.6	fp_mc_470_e.vsd	Function diagram	- 470 -
					08.01.02	MASTERDRIVES MC	

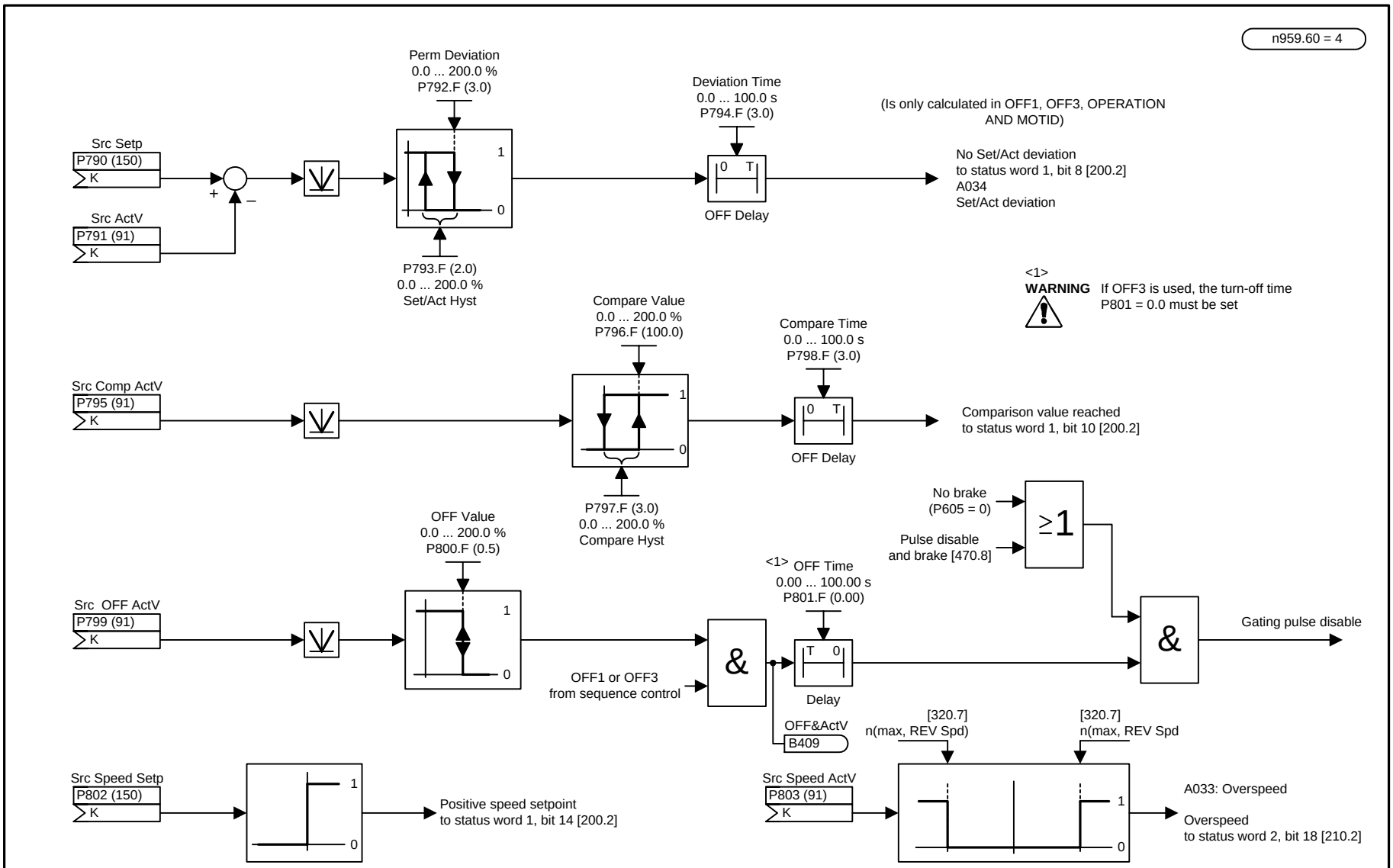
n959.60 = 4
Perm Deviation
0.0 ... 200.0 %
P792.F (3.0)
Deviation Time
0.0 ... 100.0 s
P794.F (3.0)
(Is only calculated in OFF1, OFF3, OPERATION AND MOTID)
Src Setp
P790 (150)
K
Src ActV
P791 (91)
K
+
–
1
0
0 T
OFF Delay
No Set/Act deviation
to status word 1, bit 8 [200.2]
A034
Set/Act deviation
P793.F (2.0)
0.0 ... 200.0 %
Set/Act Hyst
<1>
WARNING
If OFF3 is used, the turn-off time P801 = 0.0 must be set
Compare Value
0.0 ... 200.0 %
P796.F (100.0)
Compare Time
0.0 ... 100.0 s
P798.F (3.0)
Src Comp ActV
P795 (91)
K
1
0
0 T
OFF Delay
Comparison value reached
to status word 1, bit 10 [200.2]
P797.F (3.0)
0.0 ... 200.0 %
Compare Hyst
No brake
(P605 = 0)
Pulse disable
and brake [470.8]
≥1
OFF Value
0.0 ... 200.0 %
P800.F (0.5)
<1> OFF Time
0.00 ... 100.00 s
P801.F (0.00)
Src OFF ActV
P799 (91)
K
1
0
&
T 0
Delay
Gating pulse disable
OFF1 or OFF3
from sequence control
OFF&ActV
B409
[320.7]
n(max, REV Spd)
[320.7]
n(max, REV Spd
Src Speed Setp
P802 (150)
K
1
0
Positive speed setpoint
to status word 1, bit 14 [200.2]
Src Speed ActV
P803 (91)
K
1
0
A033: Overspeed
Overspeed
to status word 2, bit 18 [210.2]

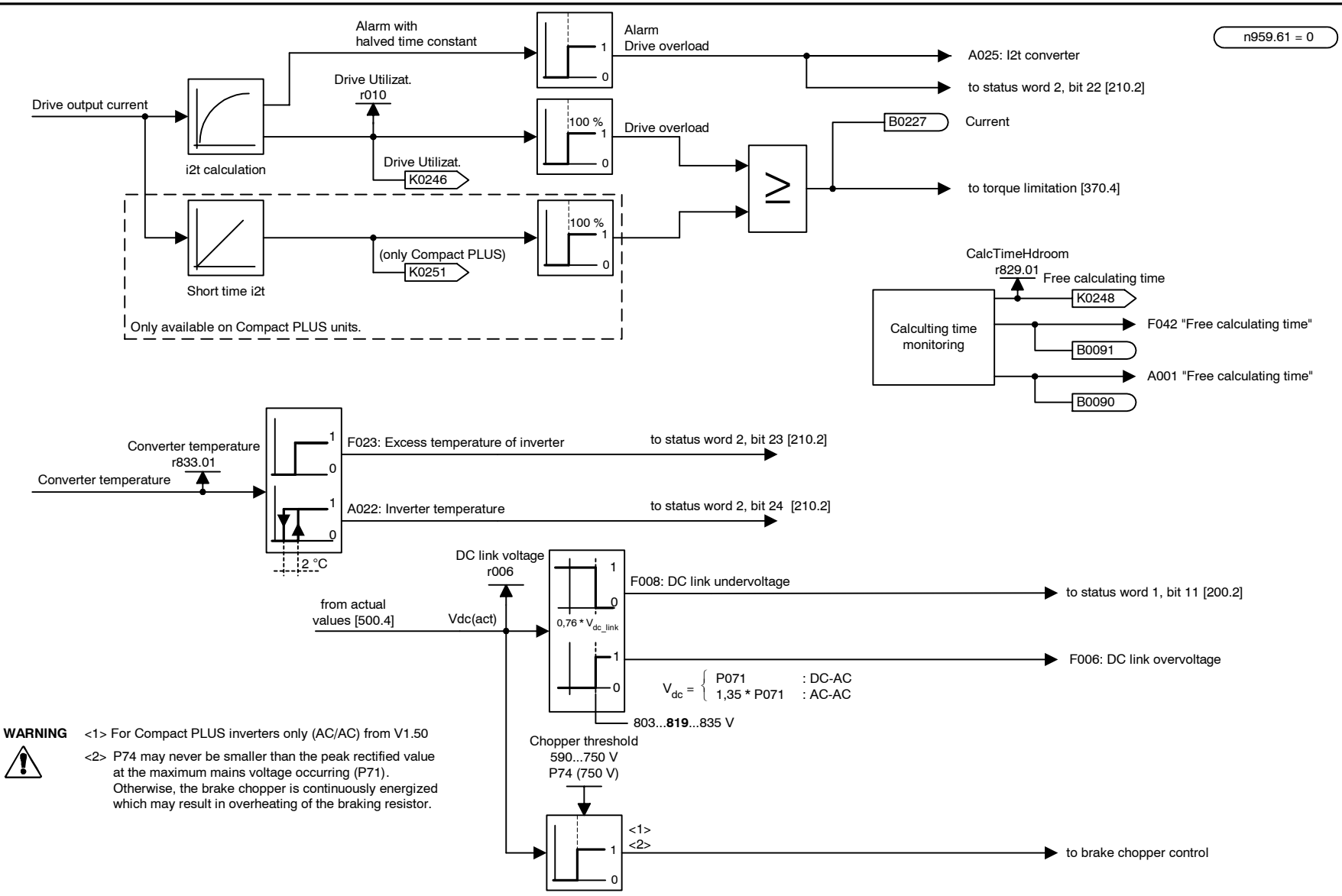

WARNING

<1> For Compact PLUS inverters only (AC/AC) from V1.50

<2> P74 may never be smaller than the peak rectified value at the maximum mains voltage occurring (P71). Otherwise, the brake chopper is continuously energized which may result in overheating of the braking resistor.

n959.63 = 0

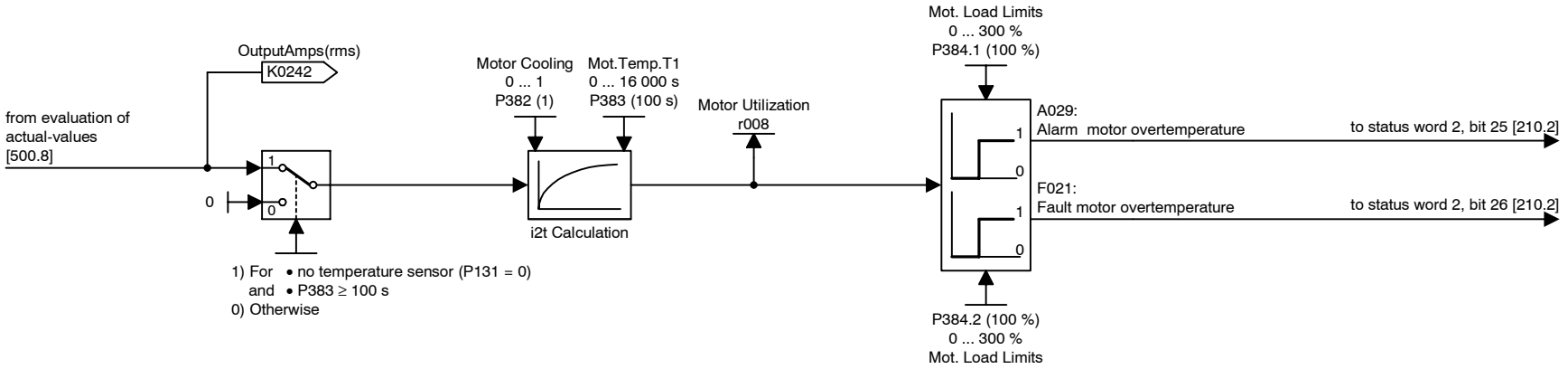

Motor temperature monitoring:

No temperature sensor:	P131 = 0
Monitoring with KTY84:	P131 = 1
PTC monitoring:	P131 = 2
Monitoring with PT100:	P131 = 3

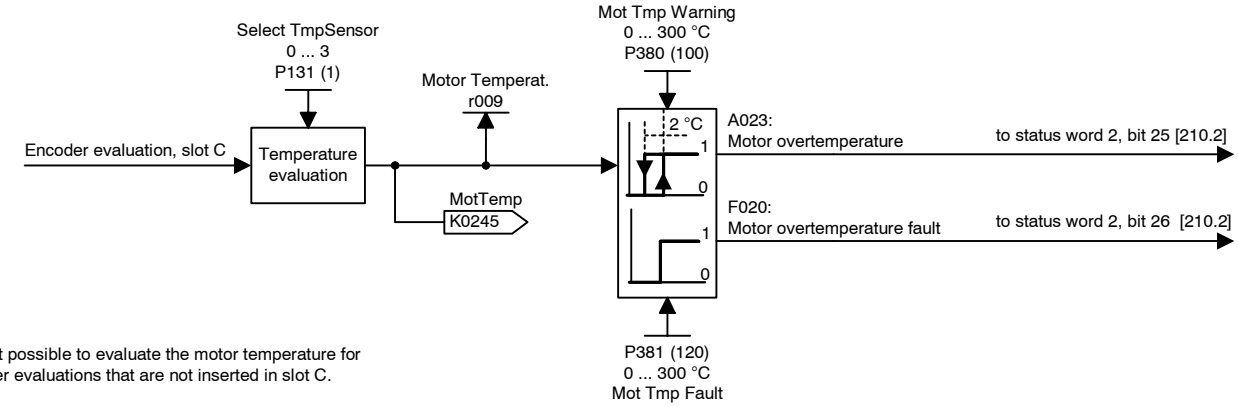

WARNING It is not possible to evaluate the motor temperature for encoder evaluations that are not inserted in slot C.

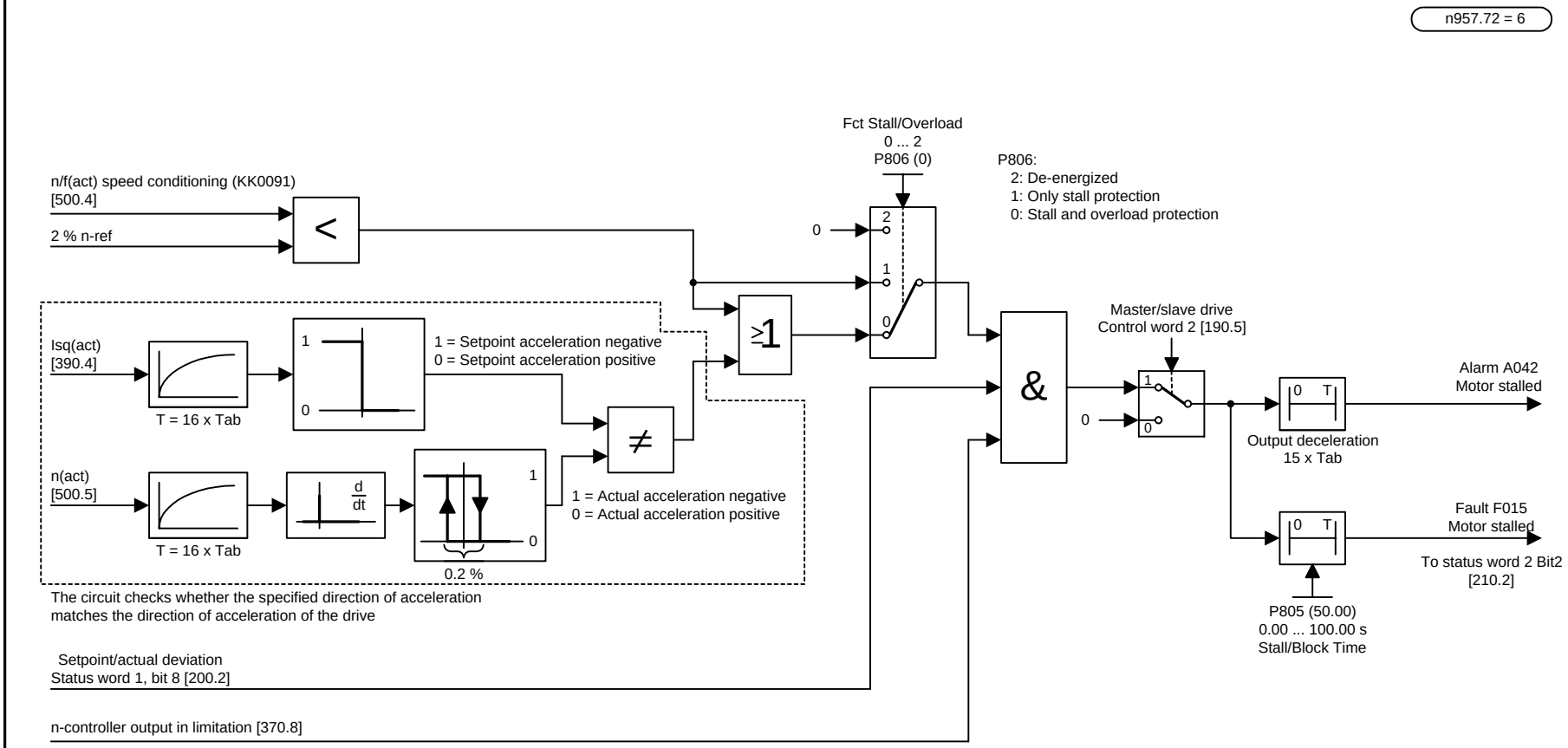
n957.72 = 6
Fct Stall/Overload
0 ... 2
P806 (0)
P806:
2: De-energized
1: Only stall protection
0: Stall and overload protection
n/f(act) speed conditioning (KK0091)
[500.4]
2 % n-ref
<
0
2
1
0
≥1
Isq(act)
[390.4]
T = 16 x Tab
1
0
1 = Setpoint acceleration negative
0 = Setpoint acceleration positive
≠
n(act)
[500.5]
T = 16 x Tab
d
dt
1
0
0.2 %
1 = Actual acceleration negative
0 = Actual acceleration positive
The circuit checks whether the specified direction of acceleration
matches the direction of acceleration of the drive
Setpoint/actual deviation
Status word 1, bit 8 [200.2]
n-controller output in limitation [370.8]
&
Master/slave drive
Control word 2 [190.5]
1
0
0
T
Output deceleration
15 x Tab
Alarm A042
Motor stalled
Fault F015
Motor stalled
To status word 2 Bit2
[210.2]
P805 (50.00)
0.00 ... 100.00 s
Stall/Block Time

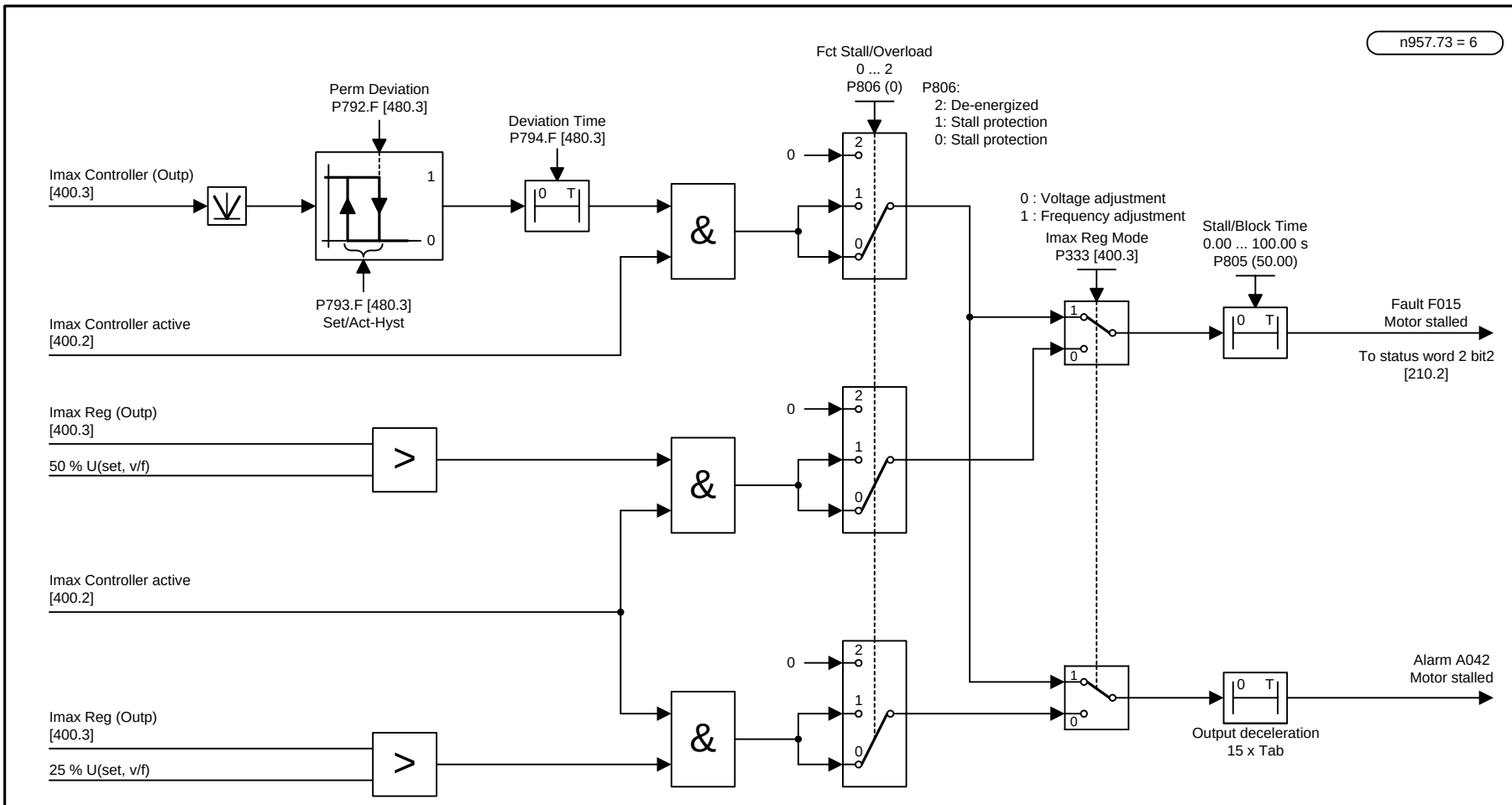

1	2	3	4	5	6	7	8
Protective functions				V1.6	fp_mc_493_e.vsd	Function diagram	- 493 -
Part 4 (stall diagnosis V/f characteristic (P290 = 1))					08.01.02	MASTERDRIVES MC	

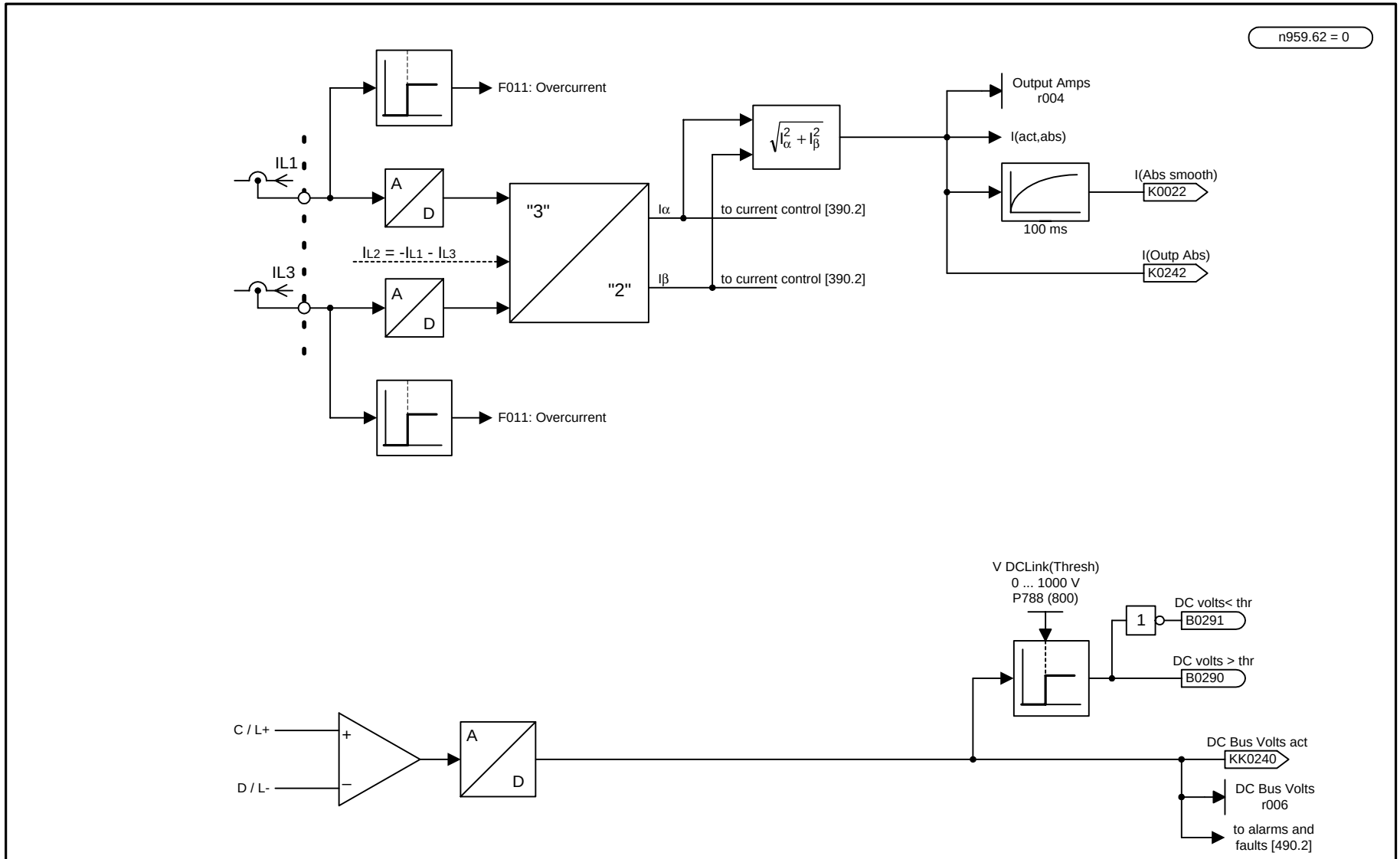

1	2	3	4	5	6	7	8
Actual values				V1.6	fp_mc_500_e.vsd	Function diagram	- 500 -
					09.11.01	MASTERDRIVES MC	

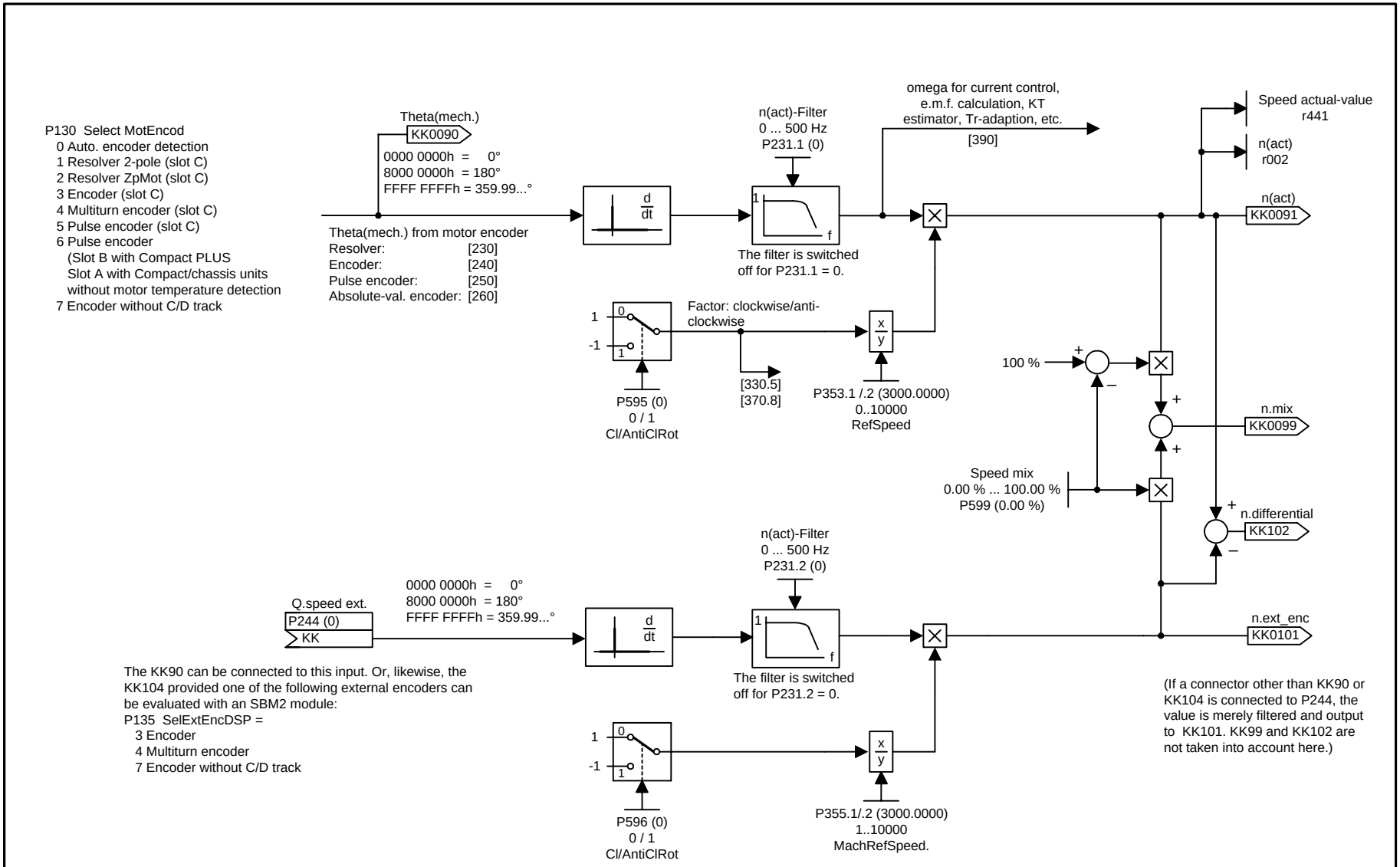

1	2	3	4	5	6	7	8
Set speed values				V1.6	fp_mc_500a_e.vsd	Function diagram	- 500a -
					30.08.01	MASTERDRIVES MC	

n957.83 = 4

When using the reduced voltage mode, pay attention to the following:
If the DC link voltage V_{dc_link} rises from the reduced range to the chopper switch-in threshold in less than 3 s (as a result of heavy braking), proper functioning of the chopper cannot be assured.
The chopper can possibly fail to turn on, which will cause the converter or inverter to cut out as a result of fault F006 "Overvoltage".

Caution: The DC link voltage may never be suddenly increased again.

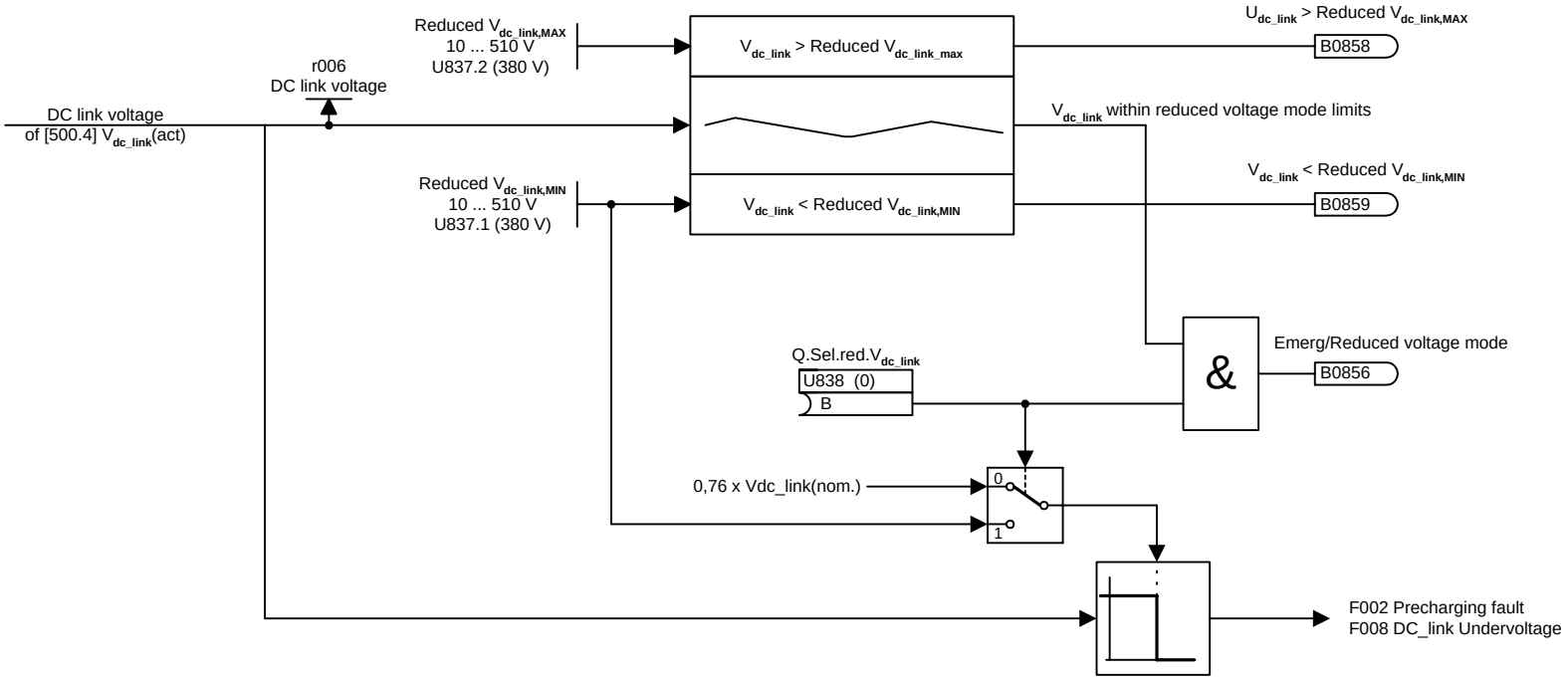

1	2	3	4	5	6	7	8
DC link voltage reduction				V1.6	fp_mc_501_e.vsd	Function diagram	- 501 -
					08.01.02	MASTERDRIVES MC	

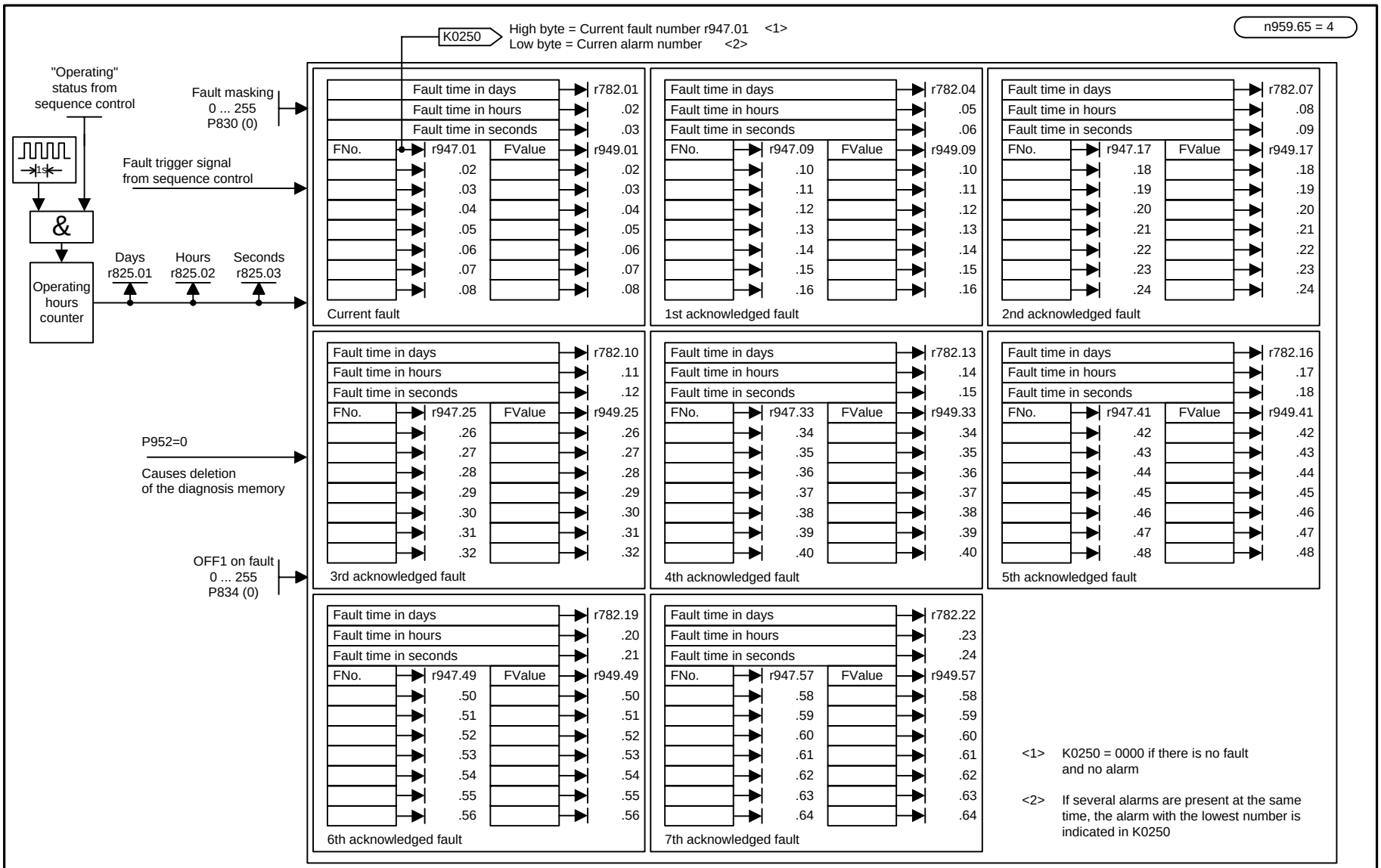

1	2	3	4	5	6	7	8
Fault memory				V1.6	fp_mc_510_e.vsd	Function diagram	- 510 -
					30.08.01	MASTERDRIVES MC	

n959.70 = 8

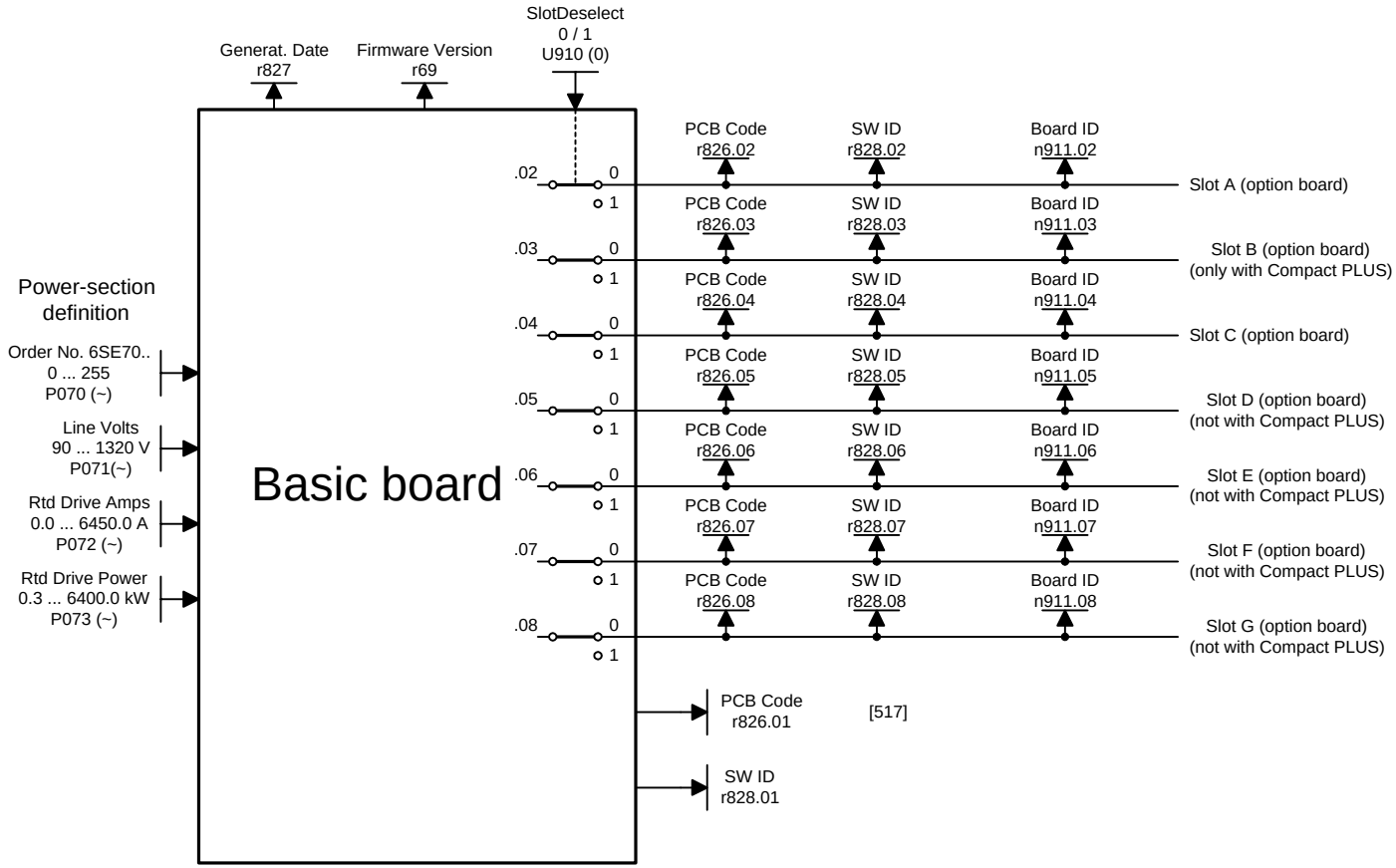
Generat. Date
r827
Firmware Version
r69
SlotDeselect
0 / 1
U910 (0)
Basic board
Power-section
definition
Order No. 6SE70..
0 ... 255
P070 (~)
Line Volts
90 ... 1320 V
P071(~)
Rtd Drive Amps
0.0 ... 6450.0 A
P072 (~)
Rtd Drive Power
0.3 ... 6400.0 kW
P073 (~)
.02
.03
.04
.05
.06
.07
.08
0
1
PCB Code
r826.02
SW ID
r828.02
Board ID
n911.02
Slot A (option board)
PCB Code
r826.03
SW ID
r828.03
Board ID
n911.03
Slot B (option board)
(only with Compact PLUS)
PCB Code
r826.04
SW ID
r828.04
Board ID
n911.04
Slot C (option board)
PCB Code
r826.05
SW ID
r828.05
Board ID
n911.05
Slot D (option board)
(not with Compact PLUS)
PCB Code
r826.06
SW ID
r828.06
Board ID
n911.06
Slot E (option board)
(not with Compact PLUS)
PCB Code
r826.07
SW ID
r828.07
Board ID
n911.07
Slot F (option board)
(not with Compact PLUS)
PCB Code
r826.08
SW ID
r828.08
Board ID
n911.08
Slot G (option board)
(not with Compact PLUS)
PCB Code
r826.01
[517]
SW ID
r828.01

n959.70 = 8

r826	Meaning
90 to 109	Mainboards oder Control Unit
110 to 119	Sensor Board (SBx)
120 to 129	Serial Communication Board (Scx)
130 to 139	Technology Board
140 to 149	Communication Board (Cbx)
150 to 169	Special boards (EBx, SLB)

Board	Meaning	r826
CUVC	Control Unit Vector Control	92
CUMC	Control Unit Motion Control Compact	93
CUMC+	Control Unit Motion Control Compact PLUS	94
CUA	Control Unit AFE	106
CUSA	Control Unit Sinus AFE	108
SBP	Sensor Board Puls	111
SBM	Sensor Board Encoder/Multiturn	112
SBM2	Sensor Board Encoder/Multiturn 2	113
SBR1	Sensor Board Resolver	114
SBR2	Sensor Board Resolver 2	115
SCB1	Serial Communication Board 1 (LWL)	121
SCB2	Serial Communication Board 2	122
T100	Technology board	131
T300	Technology board	131
T400	Technology board	134
CBX	Communication Board	14x
CBP	Communication Board PROFIBUS	143
CBD	Communication Board DeviceNet	145
CBC	Communication Board CANBUS	146
CBL	Communication Board CC-Link	147
CBP2	Communication Board PROFIBUS 2	148
EB1	Expansion Board 1	151
EB2	Expansion Board 2	152
SLB	SIMOLINK-Bus-Interface	161

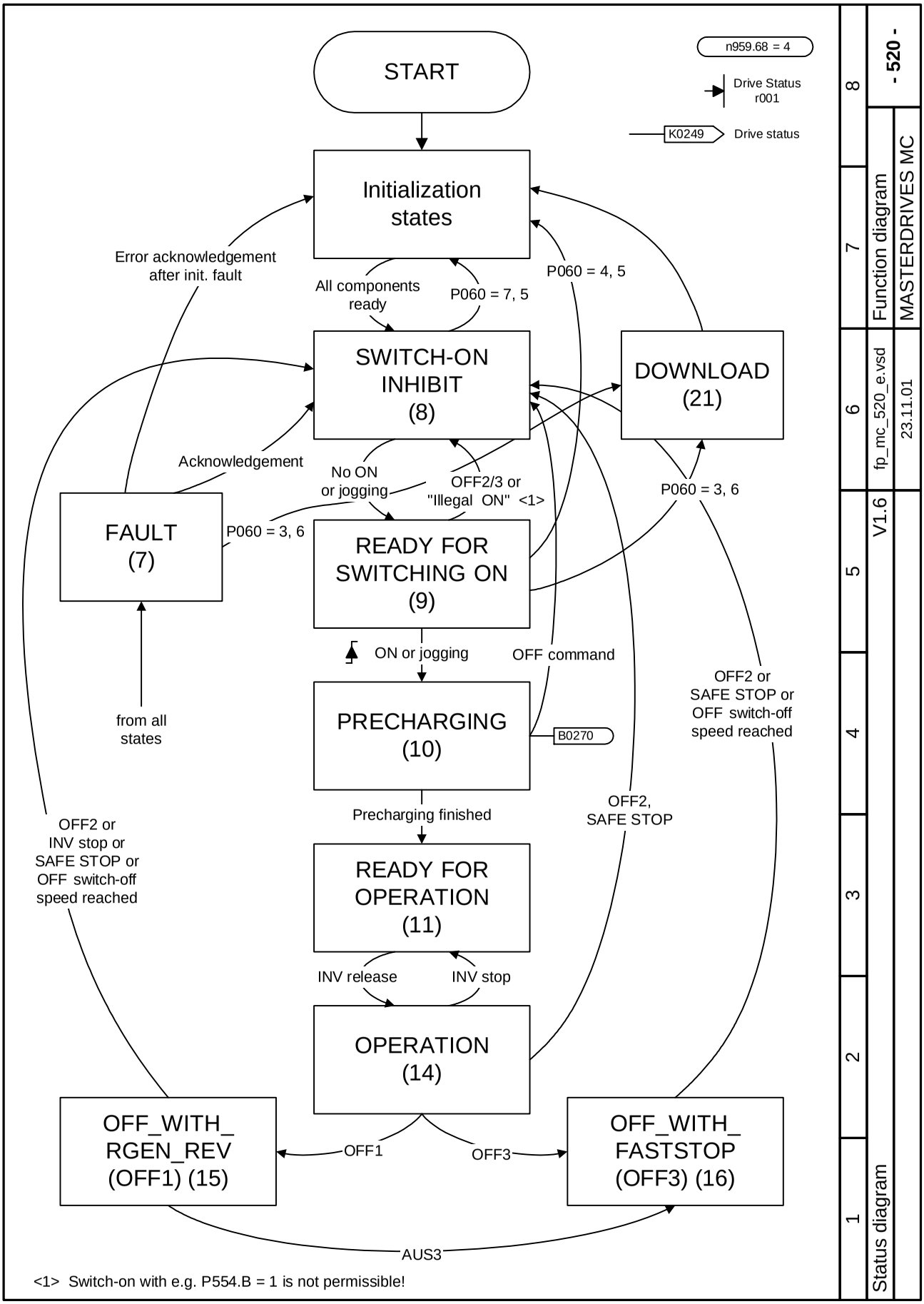
START
n959.68 = 4
Drive Status r001
K0249
Drive status
Initialization states
Error acknowledgement after init. fault
All components ready
P060 = 7, 5
P060 = 4, 5
SWITCH-ON INHIBIT (8)
DOWNLOAD (21)
Acknowledgement
No ON or jogging
OFF2/3 or "Illegal ON" <1>
P060 = 3, 6
FAULT (7)
P060 = 3, 6
READY FOR SWITCHING ON (9)
ON or jogging
OFF command
from all states
PRECHARGING (10)
B0270
OFF2 or SAFE STOP or OFF switch-off speed reached
Precharging finished
OFF2, SAFE STOP
OFF2 or INV stop or SAFE STOP or OFF switch-off speed reached
READY FOR OPERATION (11)
INV release
INV stop
OPERATION (14)
OFF_WITH_ RGEN_REV (OFF1) (15)
OFF1
OFF3
OFF_WITH_ FASTSTOP (OFF3) (16)
AUS3
<1> Switch-on with e.g. P554.B = 1 is not permissible!
8
7
6
5
4
3
2
1
- 520 -
Function diagram
MASTERDRIVES MC
fp_mc_520_e.vsd
23.11.01
V1.6
Status diagram

n959.66 = 4

Copy BICO DSet
0 ... 21
P363 (0)

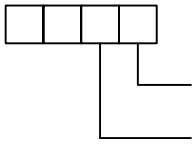

Target data set (1/2)

Source data set (1/2)

e.g. copying data set 1 to data set 2:
-> P363 = 0012

BICO data set parameters
P190, P192, P193, P194, P196, P197, P203, P210, P211, P212, P213,
P220, P224, P225, P226, P227, P228, P232, P241, P242, P243, P245,
P248, P260, P261, P262, P265, P266, P270, P271, P275, P321, P417,
P418, P433, P438, P443, P554, P555, P556, P557, P558, P559, P560,
P561, P562, P563, P564, P565, P567, P568, P569, P571, P572, P573,
P574, P575, P576, P577, P580, P581, P583, P584, P585, P586, P587,
P588, P589, P591, P640, P647, P648, P651, P652, P653, P654

BICO data set bit 30
from control word 2
[190.6]

Changeover of binector and connector parameters

Parameter number	Index 1	Index 2
xxxx		
xxxx		
xxxx		
xxxx		
xxxx		
xxxx		
xxxx		
xxxx		
...		

Active BICO DSet
r012

K0035

Note: The parameters concerned are designated by the code "B".

Copy FuncDSet
0 ... 43
P364 (0)

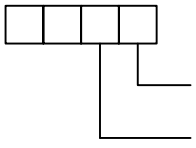

Target data set (1 ... 4)

Source data set (1 ... 4)

Function data set parameters
P191, P195, P199, P204, P206, P207, P221, P233, P234, P235, P236,
P240, P246, P249, P250, P263, P264, P401, P402, P403, P404, P405,
P406, P407, P408, P409, P410, P411, P412, P413, P414, P415,
P416, P434, P439, P444, P448, P449, P450, P452, P453, P462, P464,
P469, P471, P595, P641, P642, P643, P644, P792, P793, P794, P796,
P797, P798, P800, P801,
U001, U002, U003, U004, U005, U006, U007, U008, U009, U011, U012,
U013, U014, U015, U016, U017, U018, U021, U022, U023, U024, U025,
U026, U027, U028, U129, U131, U133, U156, U157, U158, U159, U162,
U163, U164, U165, U294, U297, U300, U303, U306, U309, U313, U331,
U332, U333, U334, U335

Function data set bit 16
from control word 2
[190.6]

Function data set bit 17
from control word 2
[190.6]

Changeover of function parameters

Parameter number	Index 1	Index 2	Index 3	Index 4
xxxx				
xxxx				
xxxx				
xxxx				
xxxx				
xxxx				
xxxx				
xxxx				
...				

Active FuncDSet
r013

K0036

Note: The parameters concerned are designated by the code "F".

n959.67 = 2

Parameter P115 "Calc MotModel" = 1 also affects the following parameters:

Induction motor connected (P095 = 2, 4):

P103 Mot No Load Amps (only if = 0 has first been parameterized)
P121 Stator Resist
P122 Tot Leak React
P123 Stator React
P124 Rotor TimeConst
P293 FieldWKFreq
P294 Select flux control (set to 1 = controlled)
P602 Excitation Time
P603 De-Magnetize Time

Synchronous motor connected (P095 = 1):

P107 Mot Rtd Freq

Synchronous motor connected (P095 = 3):

P107 Mot Rtd Freq
P120 Main Field Induc
P121 Stator Resist

For both motor types,

P128 Max Current
P350 Ref Amps
P351 Ref Volts
P352 Ref Frequency
P353 Ref Speed
P354 Ref Torque

are additionally set to motor rated values

Parameter P115 "Calc MotModel" = 2 also affects the following parameters:

Induction motor connected (P095 = 2, 4):

P111 Ls = f(Isd)
P121 Stator Resist
P122 Tot Leak React
P123 Stator React

Synchronous motor connected (P095 = 1, 3):

P119 Ratio Lq/Ld
P120 Main Field Induc
P121 Stator Resist
P347 ON VoltsCompens.

MASTERDRIVES MC

"Free blocks" function diagram

Status: 08.12.05

Notes:
- A free block is only processed if it is specifically assigned to a sampling time via the allocated U95x parameter; see sheet [702]!
- Parameterization of the sampling sequence is also described on sheet [702].
- The approximate calculating time per block is indicated in {μs} for each type of block.

MASTERDRIVES MC function diagram - List of contents of the free blocks

Contents	Sheet
Free blocks: List of contents	701
Setting and monitoring the sampling times and sampling sequence	702
General function blocks	
- Fixed setpoints	705
Fixed control bits	705
Connector/binector displays	705
- Fault/alarm trigger signals	710
- Voltage monitoring of electronics power supply	710
Connector/double-connector converter	710
Double-connector/connector converter	710
- Connector/binector converters	715
- Binector/connector converters	720

Contents	Sheet
Numeric function blocks and control blocks	
- Adders	725
Subtracters	725
Sign inverters	725
- Multipliers	730
Dividers	730
- Multipliers/dividers	732
P-amplifiers	732
Shift multipliers/dividers	732
- Delay elements for analog signals	734
Integrators	734
Settable smoothing elements (high resolution)	734
Differentiators (2 word)	734
- Absolute-value generators with smoothing	735
Limiters	735
- Limit-value monitors with and without smoothing	740
- Cam-contactor groups	745
- Analog-signal switches	750
Analog signal multiplexers and demultiplexers	750
Analog signal muliplexers	753
- Characteristic blocks	755
Dead zone	755
- Selection of minimum/maximum	760
Tracking/storage elements	760
Analog signal storages	760

Contents	Sheet
Logic components	
- AND elements	765
OR elements	765
- Inverters	770
NAND elements	770
Exclusive OR elements	770
Digital signal changeover switches	770
- D flipflops	775
RS flipflops	775
- Timers	780
- Pulse generator	782
Sampling time changer	782
Sample & Hold	783
Complex blocks	
- Software counter	785
- Simple ramp-function generator 1 (32 bit)	786a
- Simple ramp-function generator 2 (32 bit)	786b
- 32-bit gear 1	786c
- 32-bit gear 2	786d
- **Basic positioner**	
Embedding in basic unit	788
Overview	788a
General notes	788b
Setpoint transfer and mode management	789a
Setup/Positioning	789b
Correction value / homing	789c
- Comfort ramp-function generator	790
- Simple ramp-function generator/ Virtual Master	791
- Technology controller	792
- Setpoint Supply SIMOLINK Encoder SLE	793
- Additive relative offset angle setting	794
- Offset adder with limitation to ACL	794a
- Wobble generator	795
- PRBS (Pseudo Random Binary Sequence) - Signal mit trace	796
- Trace	797
- Connector-to-parameter converter	798

Sampling time
2 ... 20
U950 ... U953

Sampling sequence
2 ... 20
U960 ... U963

Function	Function block number	Parameter for setting the sampling time Parameter No. (factory setting)	Parameter for setting the sampling sequence Parameter No. (factory setting)
Processing of input terminals and receive data from serial interfaces	001 002 ... 019	U950.01 (20) U950.02 (20) ... U950.19 (10)	U960.01 (10) U960.02 (20) ... U960.19 (190)
Processing of output terminals and transmit data to serial interfaces	020 ... 029	U950.20 (10) ... U950.29 (10)	U960.20 (9998) ... U960.29 (290)
Free function blocks	031 032 ... 099 101 102 ... 330	U950.31 (10) U950.32 (10) ... U950.99 (20) U951.01 (20) U951.02 (20) ... U953.30 (20)	U960.31 (310) U960.32 (320) ... U960.99 (990) U961.01 (1010) U961.02 (1020) ... U963.30 (3330)
Angle synchronism and positioning	331 ... 350	U953.31 (20) ... U953.50 (20)	U963.31 (3310) ... U963.50 (3500)
Internal sequence control and setpoint calculation	351 ... 370	U953.51 (20) ... U953.70 (20)	U963.51 (3510) ... U963.70 (3700)
Other functions	371 372	U953.71 (3) U953.72 (2)	U963.71 (100) U963.72 (3720)

Parameter for setting the sampling time
Value range: 2 ... 20
Factory setting: 20 (applies to most blocks)

Parameter value	Sampling time (T0 = 1/pulse frequency = 1/P340)	Sampling time at 5 kHz pulse frequency (T0 = 200 µs)
2	T2 = 4 x T0	0.8 ms
3	T3 = 8 x T0	1.6 ms
4	T4 = 16 x T0	3.2 ms
5	T5 = 32 x T0	6.4 ms
6	T6 = 64 x T0	12.8 ms
7	T7 = 128 x T0	25.6 ms
8	T8 = 256 x T0	51.2 ms
9	T9 = 512 x T0	102.4 ms
10	T10 = 1024 x T0	204.8 ms
11 ... 19	Reserved for future applications	
20	Block is not calculated	

Parameter for setting the sampling sequence:
Value range: 0 ... 9999
Factory setting: Function block number x 10
i.e. in the factory setting the blocks are processed in the sequence of the block numbers
Exception: Function block number 10, 14, 15, 20 - 25, 371

Setting and monitoring the sampling times and sampling sequence

Example of the sampling time and sampling sequence of a function block:

This function block has the function block number 314
It is deactivated in the factory setting (U953.14 = 20).

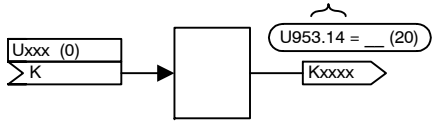

Via U953.14 = 4 the function block can be allocated to the sampling time T4 (= 16 x T0 = 3.2 ms at 5 kHz pulse frequency).

The function block is processed in the factory setting at the 3140th position. By setting U963.14 to a value not equal to 3140, the block can be allocated to a different position in the sampling sequence.

Monitoring of calculating time

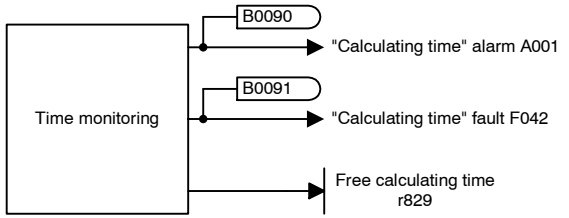

9 fixed setpoints (1-word) {2 µs}

U001.F (0.00) -200.00...200.00 % — U950.31 = __ (10) → K0401

U002.F (0.00) -200.00...200.00 % — U950.32 = __ (10) → K0402

U003.F (0.00) -200.00...200.00 % — U950.33 = __ (10) → K0403

U004.F (0.00) -200.00...200.00 % — U950.34 = __ (10) → K0404

U005.F (0.00) -200.00...200.00 % — U950.35 = __ (10) → K0405

U006.F (0.00) -200.00...200.00 % — U950.36 = __ (10) → K0406

U007.F (0.00) -200.00...200.00 % — U950.37 = __ (10) → K0407

U008.F (0.00) -200.00...200.00 % — U950.38 = __ (10) → K0408

U009.F (0) 0...65535 — U950.39 = __ (10) → K0409

0 ... 32767 corresponds to 0 ... 200 %
32768 ... 65535 corresponds to -200 ... -0 %

8 fixed setpoints (2-word) {2 µs}

U011.F (0.000) -200.000.. ..200.000 % — U950.40 = __ (10) → KK0411

U012.F (0.000) -200.000.. ..200.000 % — U950.41 = __ (10) → KK0412

U013.F (0.000) -200.000.. ..200.000 % — U950.42 = __ (10) → KK0413

U014.F (0.000) -200.000.. ..200.000 % — U950.43 = __ (10) → KK0414

U015.F (0) -2 147 483 647.. ..2 147 483 647 <2> — U950.44 = __ (10) → KK0415

U016.F (0) -2 147 483 647.. ..2 147 483 647 <2> — U950.45 = __ (10) → KK0416

U017.F (0) -2 147 483 647.. ..2 147 483 647 <2> — U950.46 = __ (10) → KK0417

U018.F (0) -2 147 483 647.. ..2 147 483 647 <2> — U950.47 = __ (10) → KK0418

<2> corresponds to -200 ... 200 %

8 fixed control bits {2 µs}

U021.F (0) 0...1 — U950.48 = __ (10) → B0401

U022.F (0) 0...1 — U950.49 = __ (10) → B0402

U023.F (0) 0...1 — U950.50 = __ (10) → B0403

U024.F (0) 0...1 — U950.51 = __ (10) → B0404

U025.F (0) 0...1 — U950.52 = __ (10) → B0405

U026.F (0) 0...1 — U950.53 = __ (10) → B0406

U027.F (0) 0...1 — U950.54 = __ (10) → B0407

U028.F (0) 0...1 — U950.55 = __ (10) → B0408

3 connector displays {1 µs}

U031 (0) K → n032 -200.0...200.0 % — U952.75 = __ (10)

U033 (0) K → n034 -200.0...200.0 % — U952.76 = __ (10)

U035 (0) K → n036 -200.0...200.0 % — U952.77 = __ (10)

4 double connector displays {3 µs}

U037 (0) KK → n038 -200.000.. ..200.000 % — U952.78 = __ (10)

U039 (0) KK → n040 -200.000.. ..200.000 % — U952.79 = __ (10)

U041 (0) KK → n042 -2 147 483 647.. ..2 147 483 647 — U952.80 = __ (10)

U043 (0) KK → n044 -2 147 483 647.. ..2 147 483 647 — U952.81 = __ (10)

4 binector displays {1 µs}

U045 (0) B → n046 0...1 — U952.82 = __ (10)

U047 (0) B → n048 0...1 — U952.83 = __ (10)

U049 (0) B → n050 0...1 — U952.84 = __ (10)

U051 (0) B → n052 0...1 — U952.85 = __ (10)

1 connector display with smoothing {5 µs}

U053 (0) K → τ ≈ 300 ms → n054 -200.00.. ..200.00 % — U952.86 = __ (10)

1 double connector display with smoothing {8 µs}

U055 (0) KK → τ ≈ 300 ms → n056 -200.000.. ..200.000 % — U952.87 = __ (10)

1	2	3	4	5	6	7	8
Free blocks				V1.6	fp_mc_705_e.vsd	Function diagram	- 705 -
Fixed setpoints, fixed control bits, connector/binector displays					08.01.02	MASTERDRIVES MC	

4 fault message trigger signals {2 µs}

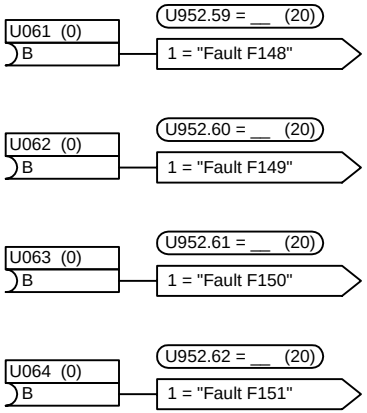

4 alarm message trigger signals {2 µs}

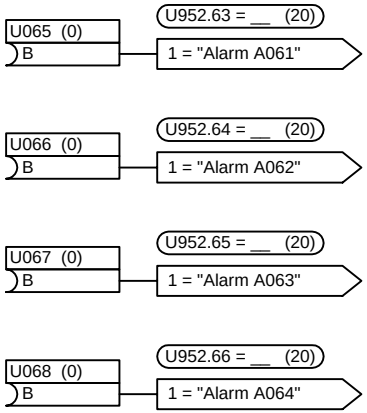

3 connector/double connector converters {9 µs}

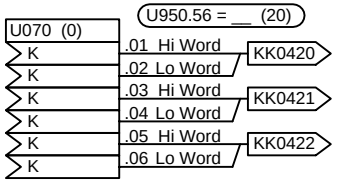

Voltage monitoring of electronics power supply

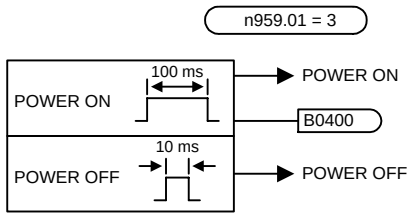

[470.3]
[760.4]
[760.7]
[775.1]
[775.3]
[775.7]
[834]

3 double connector/connector converters {11 µs}

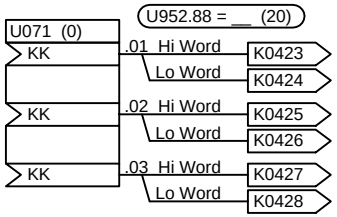

1	2	3	4	5	6	7	8
Free blocks				V1.6	fp_mc_710_e.vsd	Function diagram	- 710 -
Fault/alarm trigger signals, connector <==> double connector converter					08.01.02	MASTERDRIVES MC	

3 connector/binector converters {11 µs}

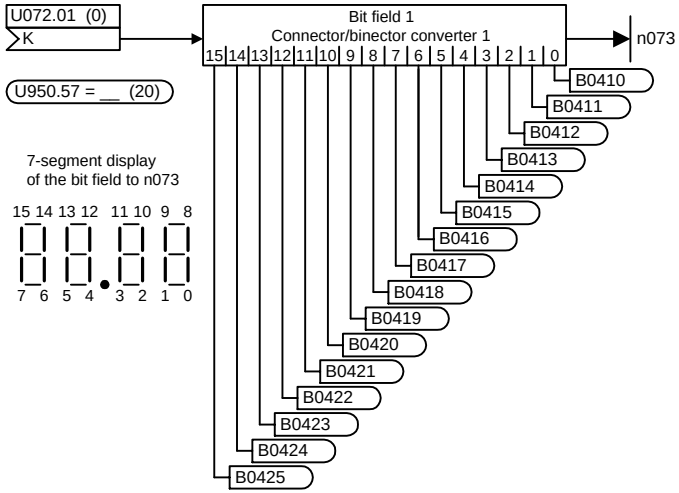

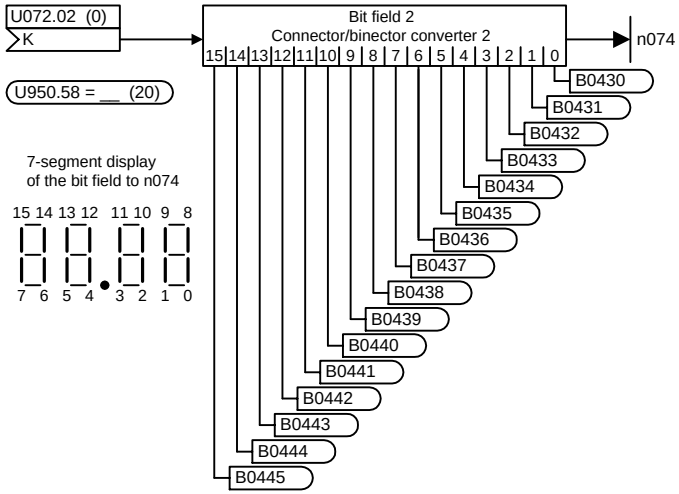

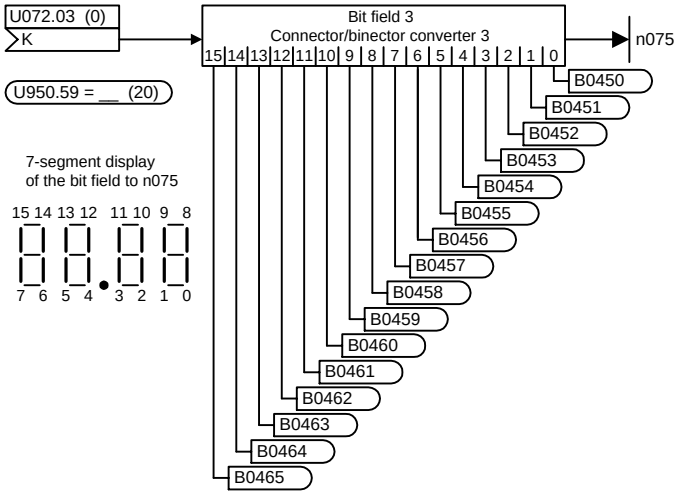

4 binector/connector converters {12 µs}

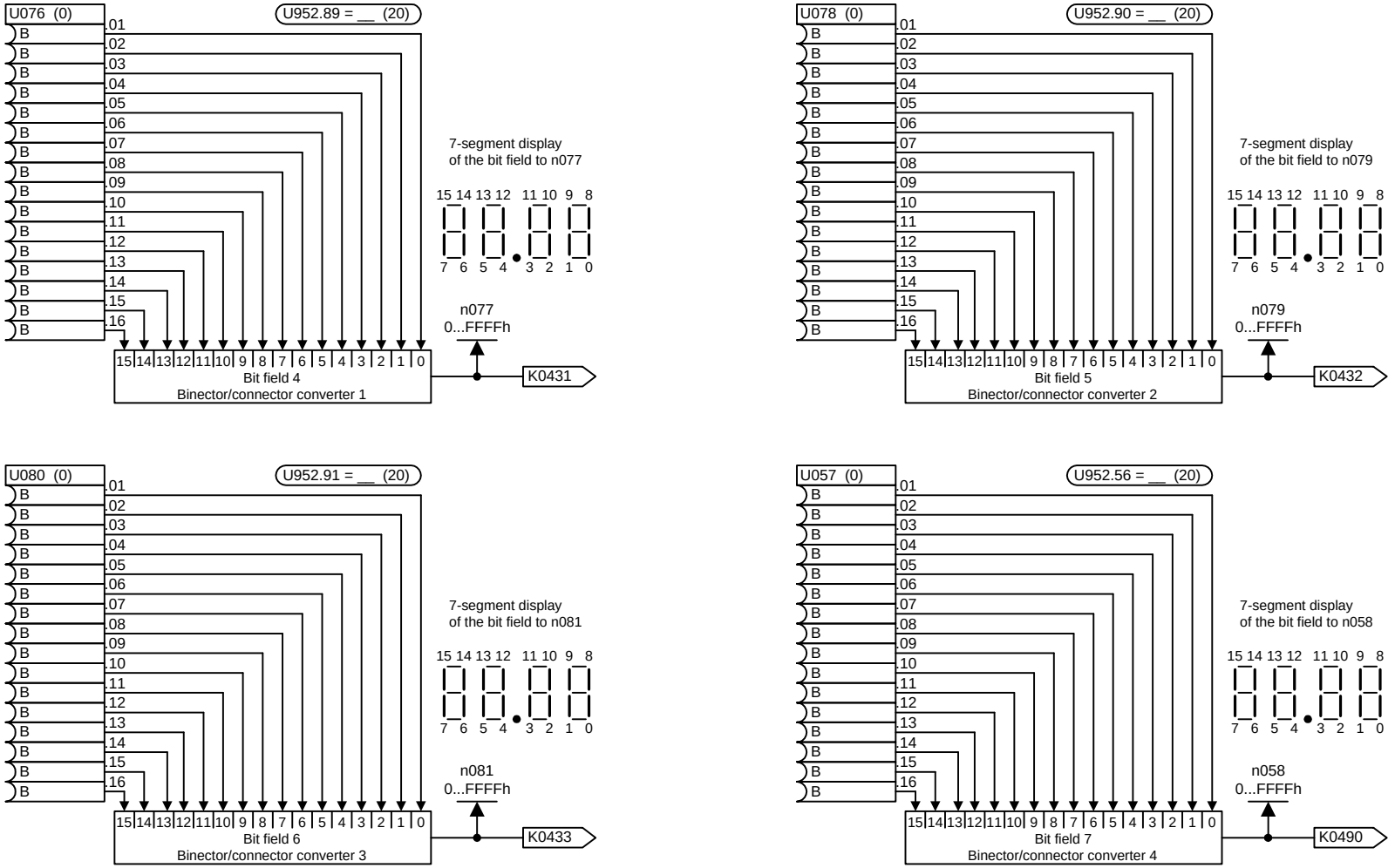

4 adders with 2 inputs (1-word) {3 µs}

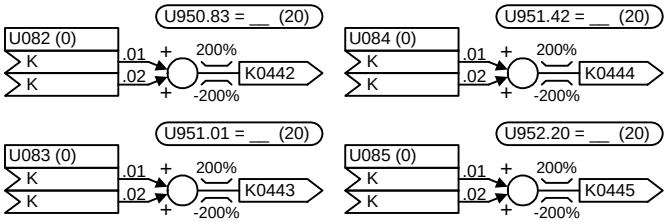

4 adders with 2 inputs (2-word) {6 µs}

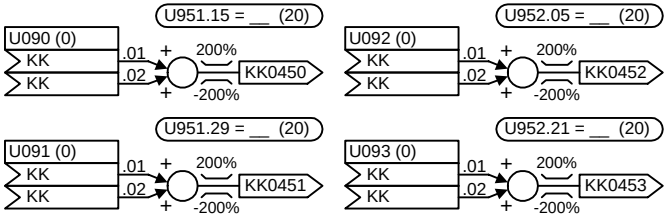

3 subtracters (1-word) {3 µs}

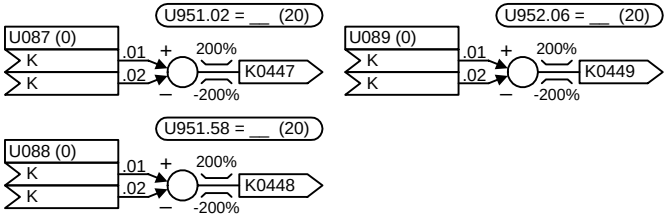

2 subtracters (2-word) {6 µs}

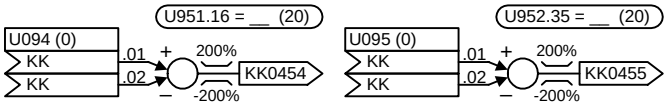

3 sign inverters (1-word) {2 µs}

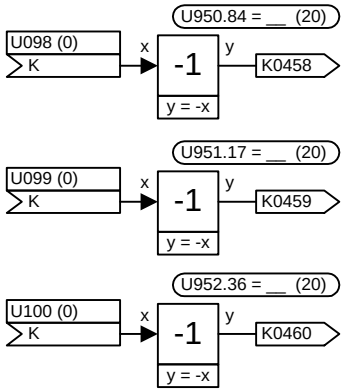

2 sign inverters (2-word) {4 µs}

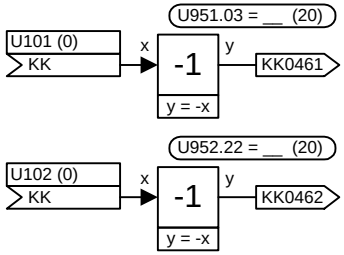

1 adder with 4 inputs (1-word) {7 µs}

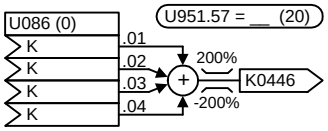

1 modulo 2^16 adder/subtracter {2 µs}

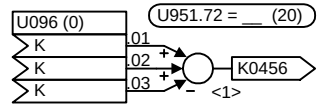

<1> Arithmetic two's complement without evaluation of carry and borrow:
No limitation in the case of overflows and underflows outside of the number range of 16 bit
(Example: 65535+40000=39999 at modulo 2^16 addition).

1 modulo 2^32 adder/subtracter {2 µs}

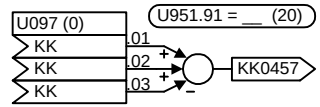

<1> Arithmetic two's complement without evaluation of carry and borrow:
No limitation in the case of overflows and underflows outside of the number range of 32 bit
(Example: $(2^{32}-1)+40000=39999$ at modulo 2^32 addition).

1 switchable sign inverter (1-word) {2 µs}

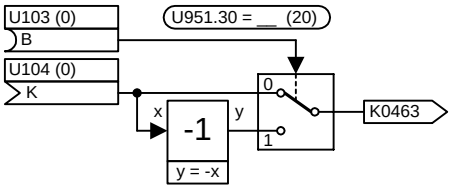

1 switchable sign inverter (2-word) {4 µs}

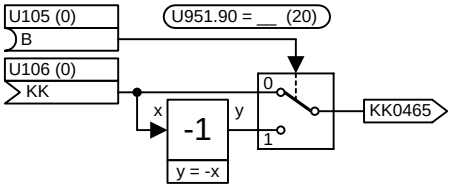

1	2	3	4	5	6	7	8
Free blocks				V1.6	fp_mc_725_e.vsd	Function diagram	- 725 -
Adders, subtracters, sign inverters					08.01.02	MASTERDRIVES MC	

3 multipliers (1-word) {12 µs}

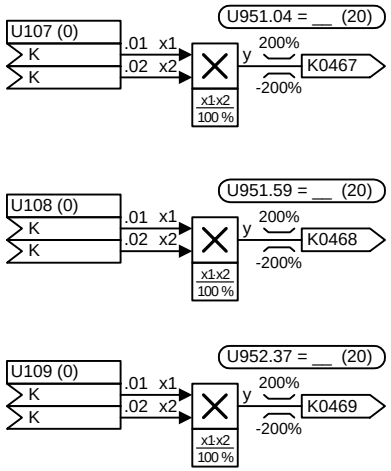

2 dividers (1-word) {15 µs}

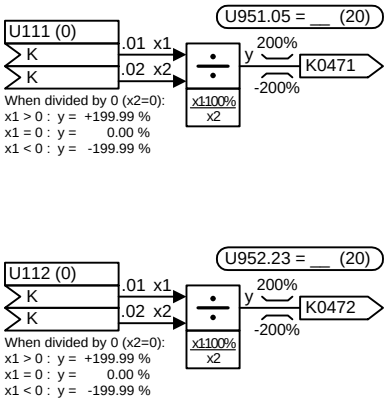

3 high-resolution multipliers/dividers (1-word) {18 µs}

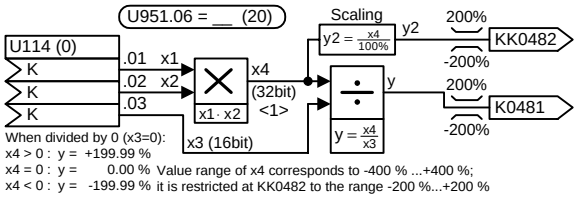

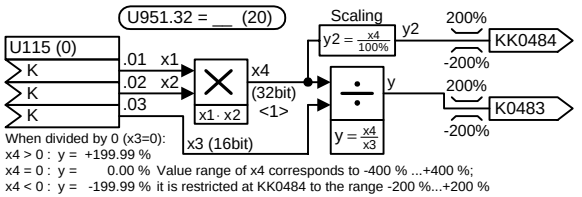

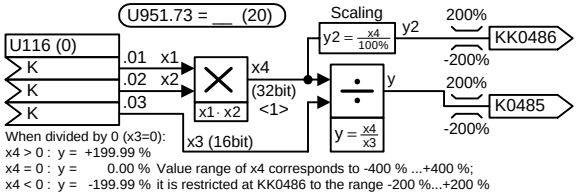

1 multiplier (2-word) {33 µs}

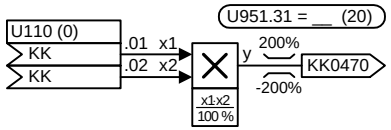

1 divider (2-word) {70 µs}

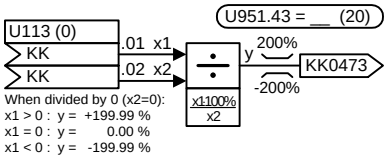

New Blocks (from V1.3 and higher)

1 high-resolution multiplier/divider (2-word) {25 µs}

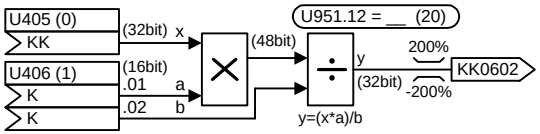

2 P-amplifiers/multipliers (2-word)

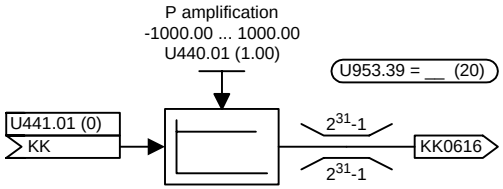

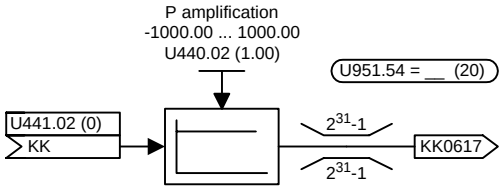

4 shift multipliers/dividers (2-word)

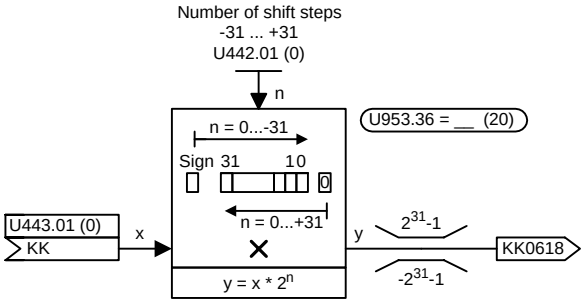

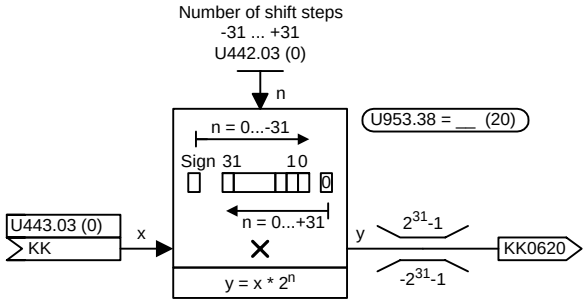

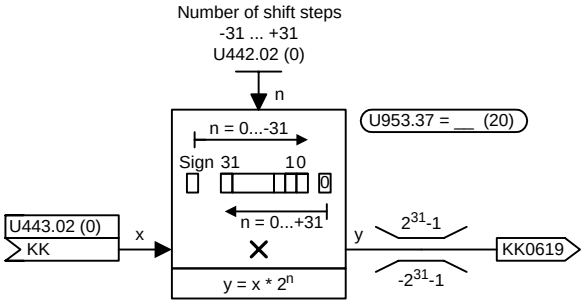

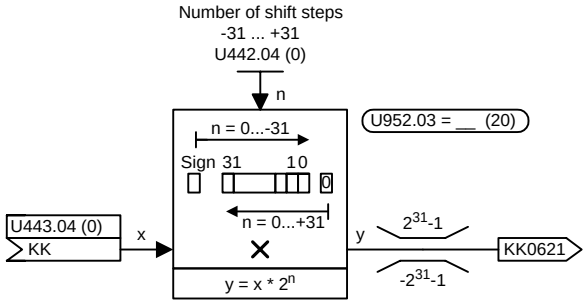

New Blocks (from V1.3 and higher)

2 delay elements for analog signals (2-word) {10 µs}

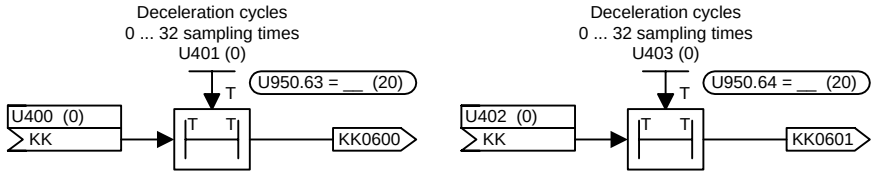

1 differentiator (2-word) {16 µs}

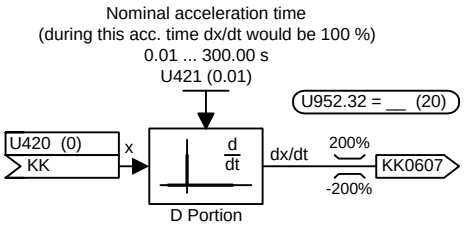

2 settable smoothing elements, high-resoltuion (2-word) {16 µs}

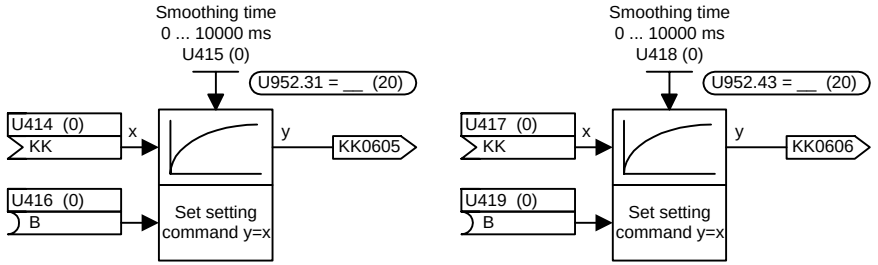

2 integrators (2-word) {30...50 µs}

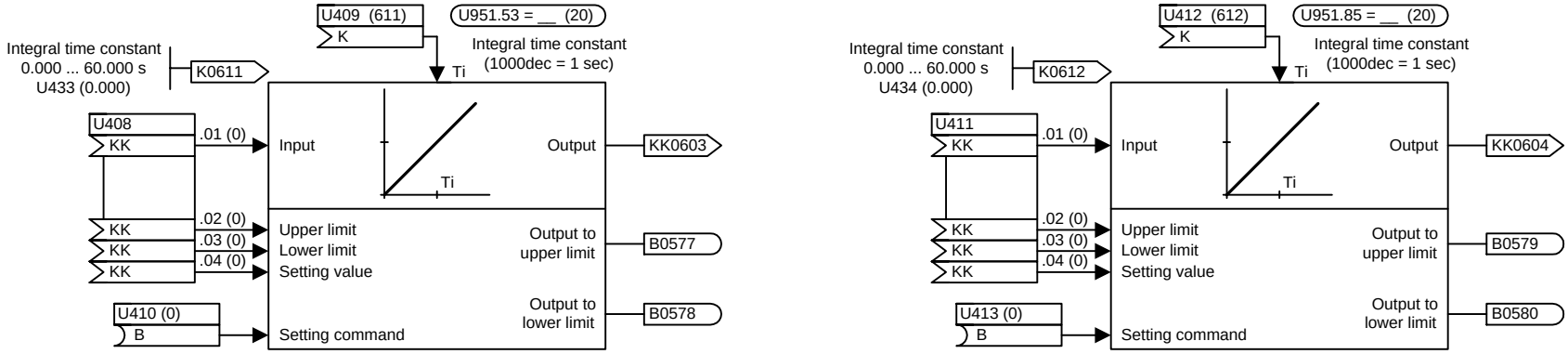

1	2	3	4	5	6	7	8
Free blocks				V1.6	fp_mc_734_e.vsd	Function diagram	- 734 -
Delay elements, differentiator, integrator, smoothing elements					08.01.02	MASTERDRIVES MC	

3 absolute-value generators with smoothing (1-word) {7 µs}

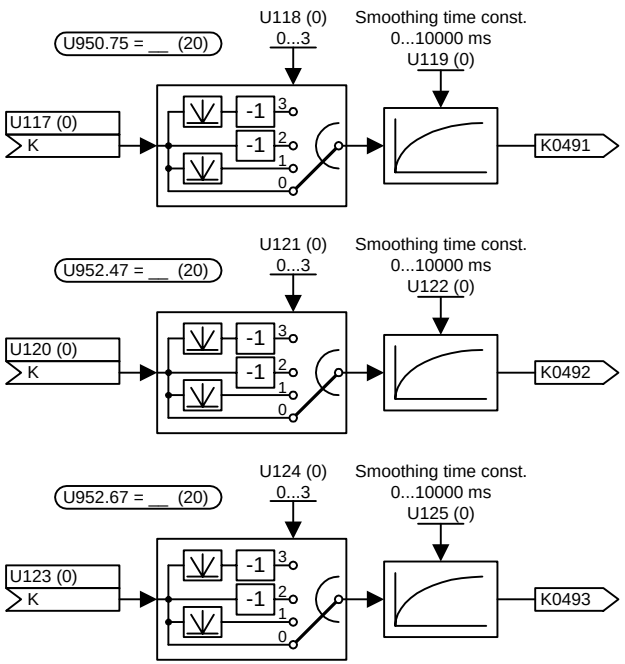

1 absolute-value generators with smoothing (2-word) {10 µs}

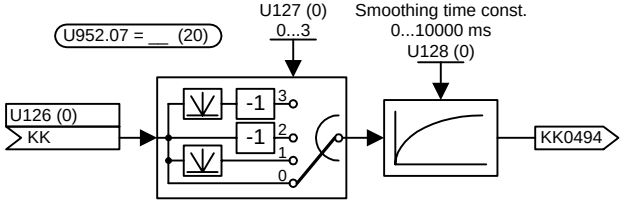

2 limiters (1-word) {5 µs}

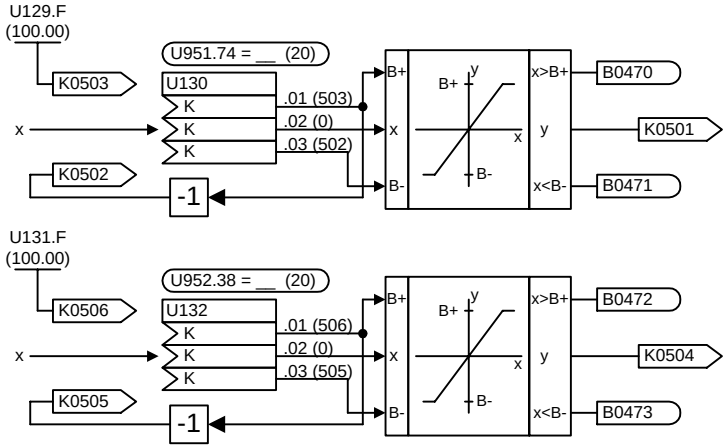

1 limiter (2-word) {11 µs}

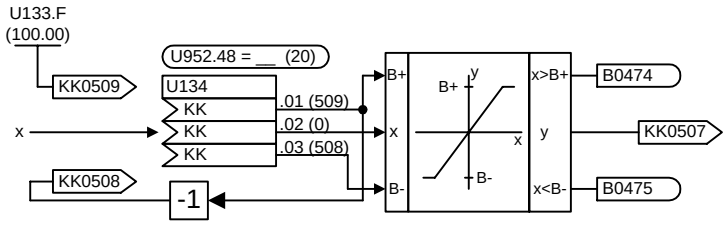

1 limit-value monitor with smoothing (2-word) {24 µs}

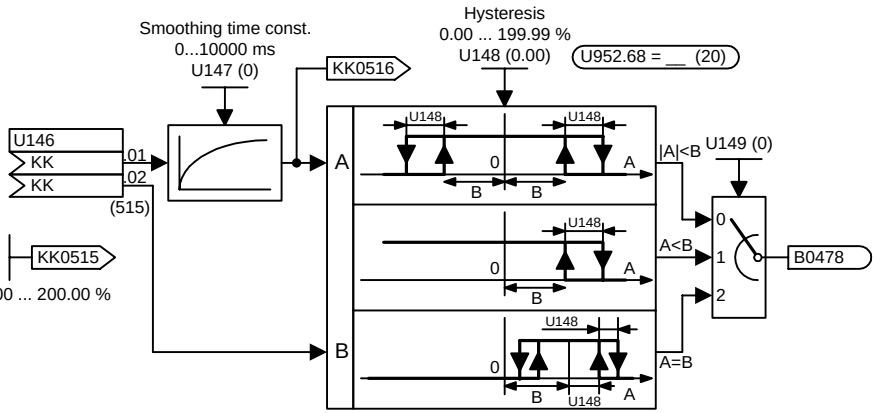

2 limit-value monitors with smoothing (1-word) {15 µs}

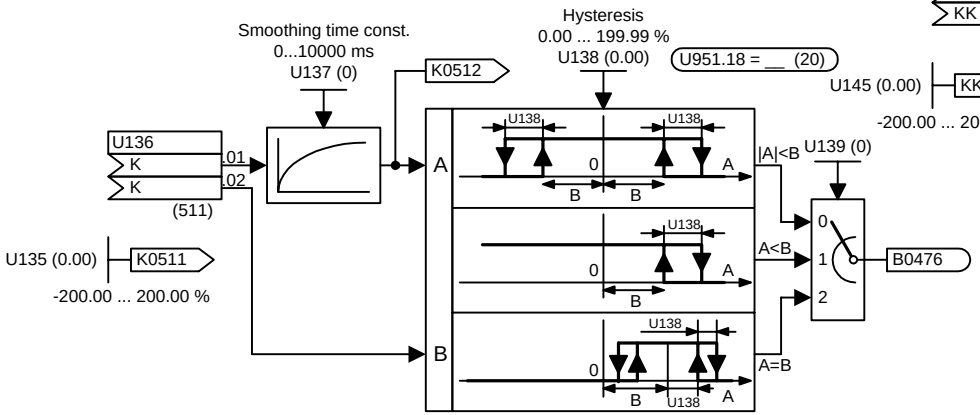

1 limit-value monitor without smoothing (2-word) {18 µs}

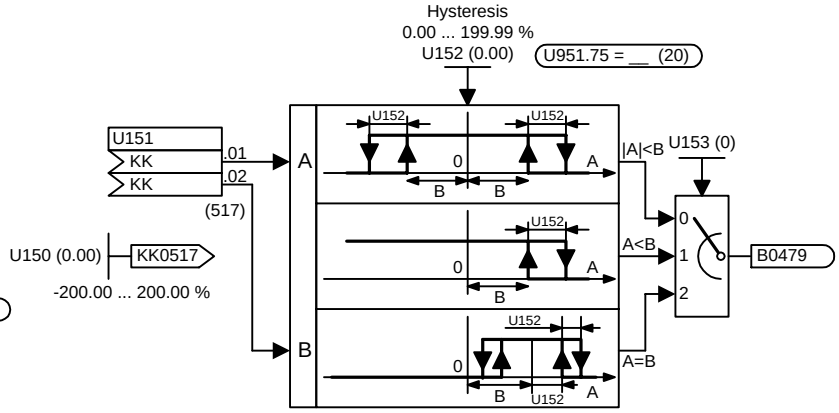

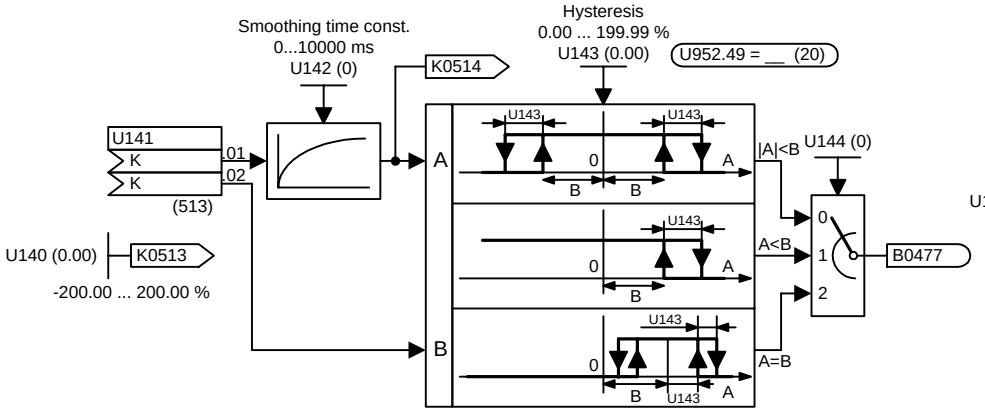

1	2	3	4	5	6	7	8
Free blocks				V1.6	fp_mc_740_e.vsd	Function diagram	- 740 -
Limit-value monitors with and without smoothing					08.01.02	MASTERDRIVES MC	

2 cam-contactor groups each with 2 cams (2-word) {9 µs}

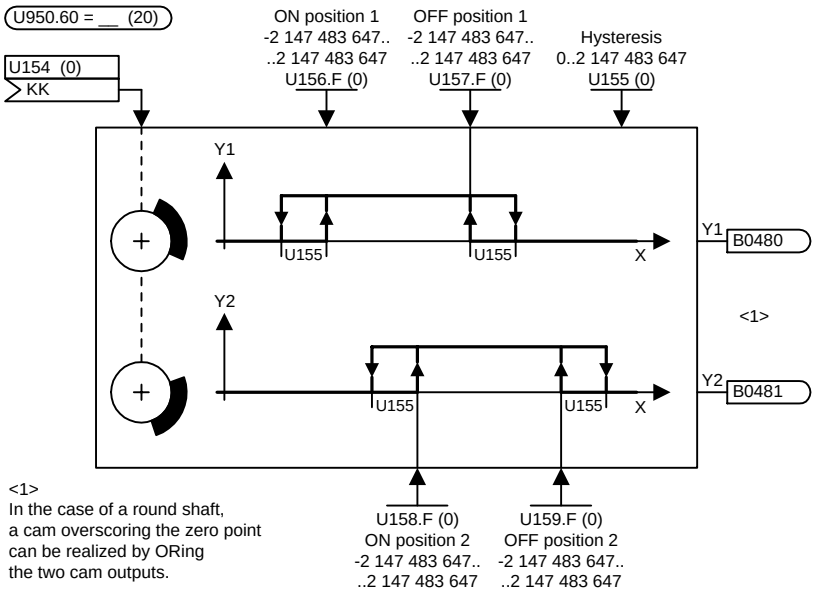

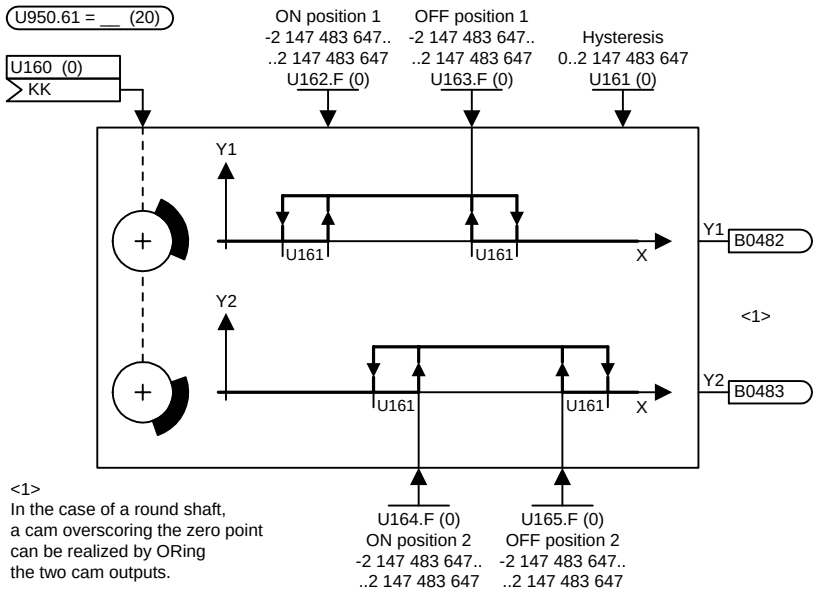

5 Analog signal switches (1-word) {2 µs}

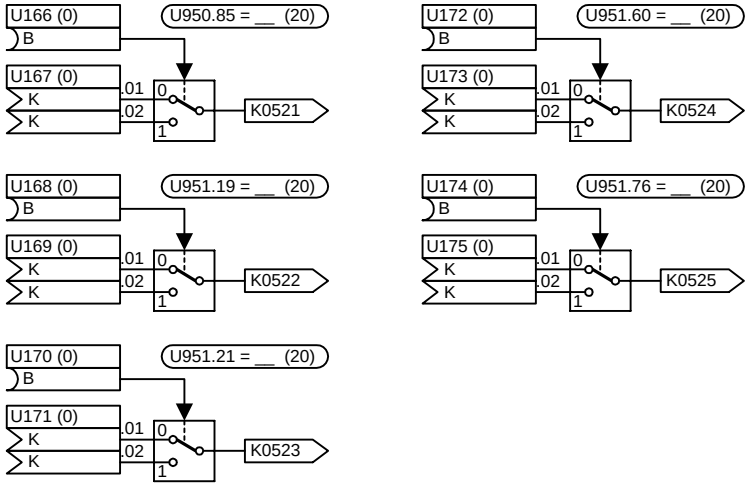

4 Analog signal multiplexer with 8 channels (2-word) {6 µs}

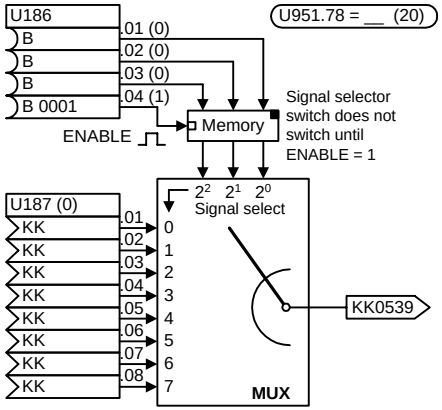

For further multiplexers: see function diagram 753

5 Analog signal switches (2-word) {4 µs}

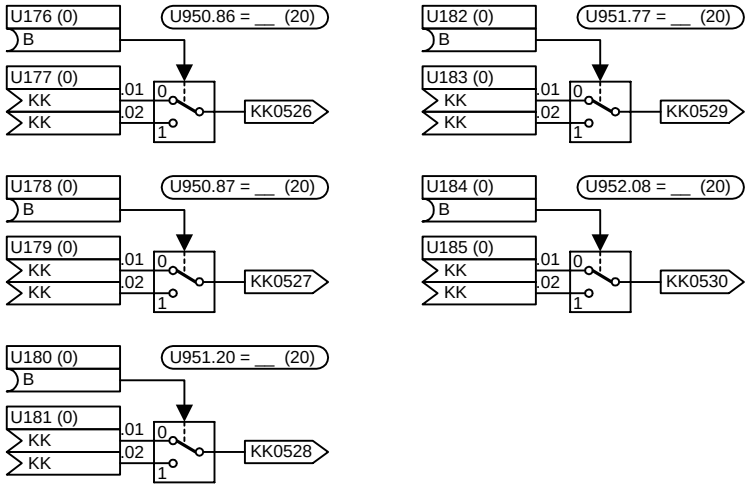

1 Analog signal demultiplexer with 8 channels (2-word) {8 µs}

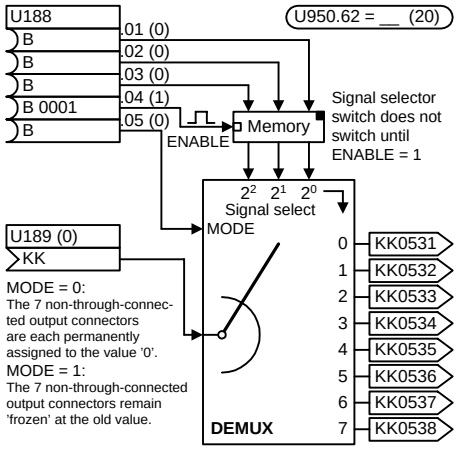

3 Analog signal multiplexer with 8 channels (2-word) {6 µs}

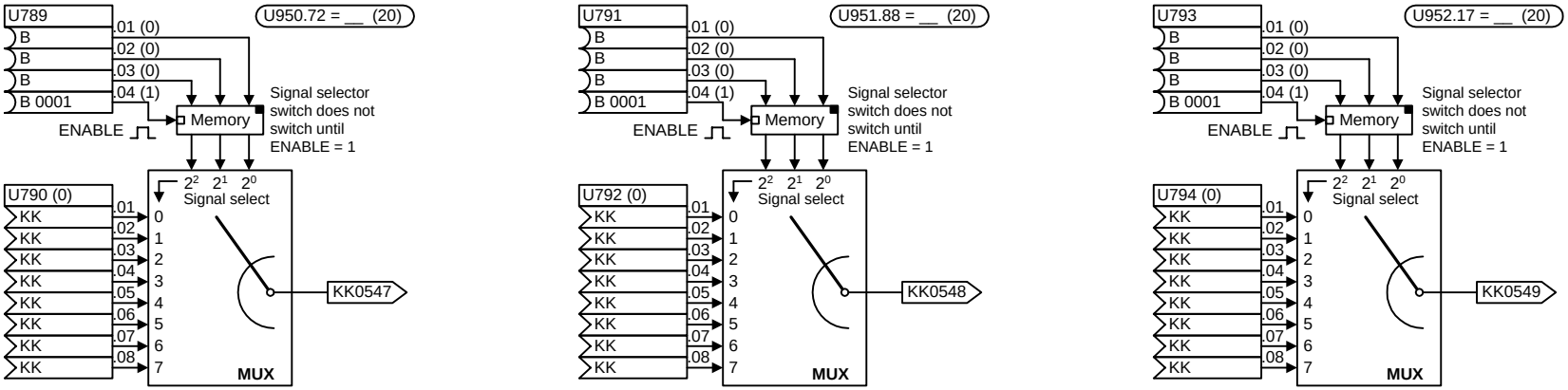

For a further multiplexer: see function diagram 750

3 characteristic blocks with 10 support values (1-word) {15 µs}

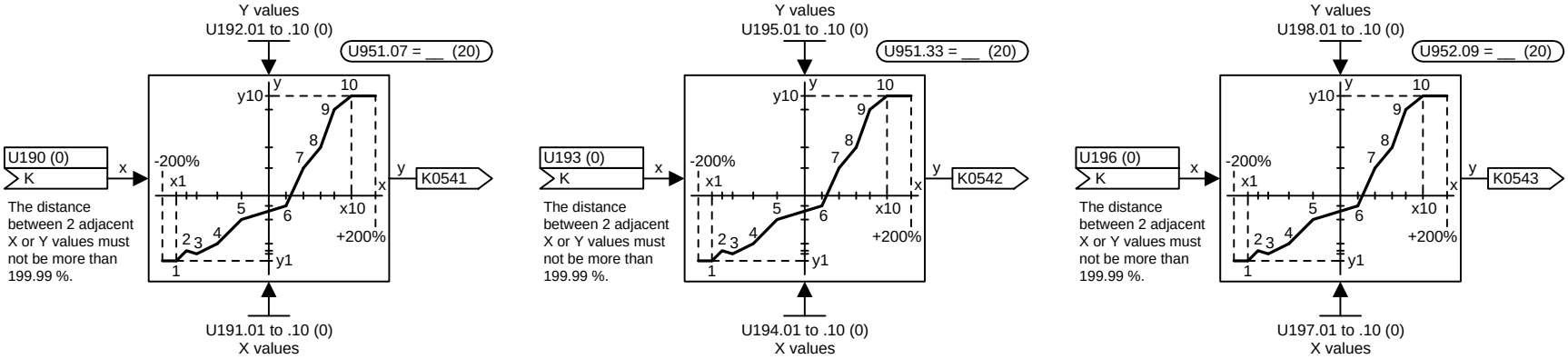

---

1 dead zone (1-word) {2 µs}

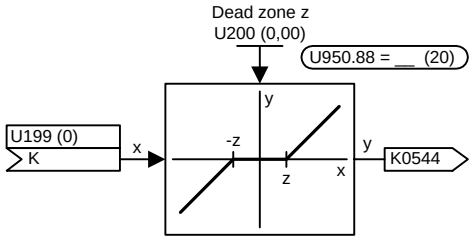

1	2	3	4	5	6	7	8
Free blocks				V1.6	fp_mc_755_e.vsd	Function diagram	- 755 -
Characteristic blocks, dead zone					08.01.02	MASTERDRIVES MC	

1 Maximum selection (2-word) {8 µs}

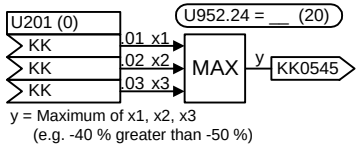

y = Maximum of x1, x2, x3
(e.g. -40 % greater than -50 %)

2 tracking / storage elements (2-word) {6 µs}

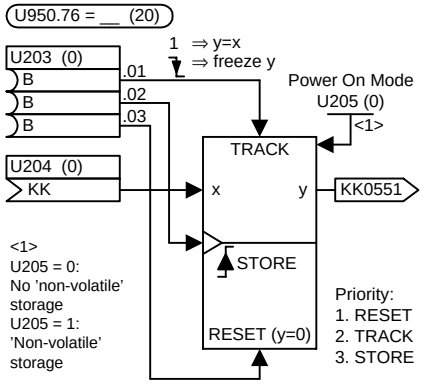

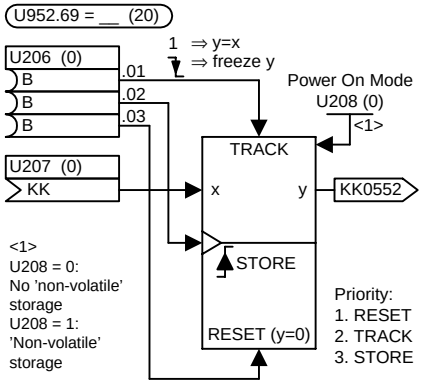

1 Minimum selection (2-word) {8 µs}

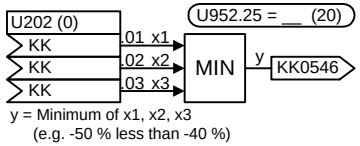

y = Minimum of x1, x2, x3
(e.g. -50 % less than -40 %)

2 analog signal storages (2-word) {4 µs}

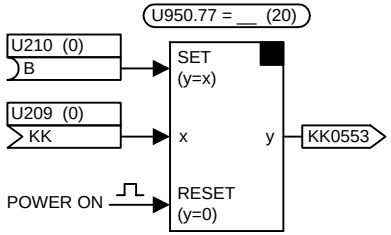

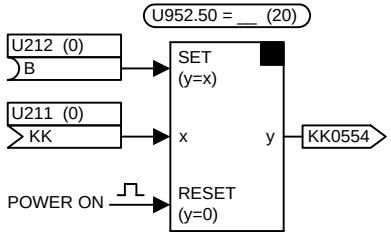

1	2	3	4	5	6	7	8
Free blocks				V1.6	fp_mc_760_e.vsd	Function diagram	- 760 -
Minimum/maximum selection, tracking/storage elements					08.01.02	MASTERDRIVES MC	

18 AND elements with 3 inputs each {3 µs}

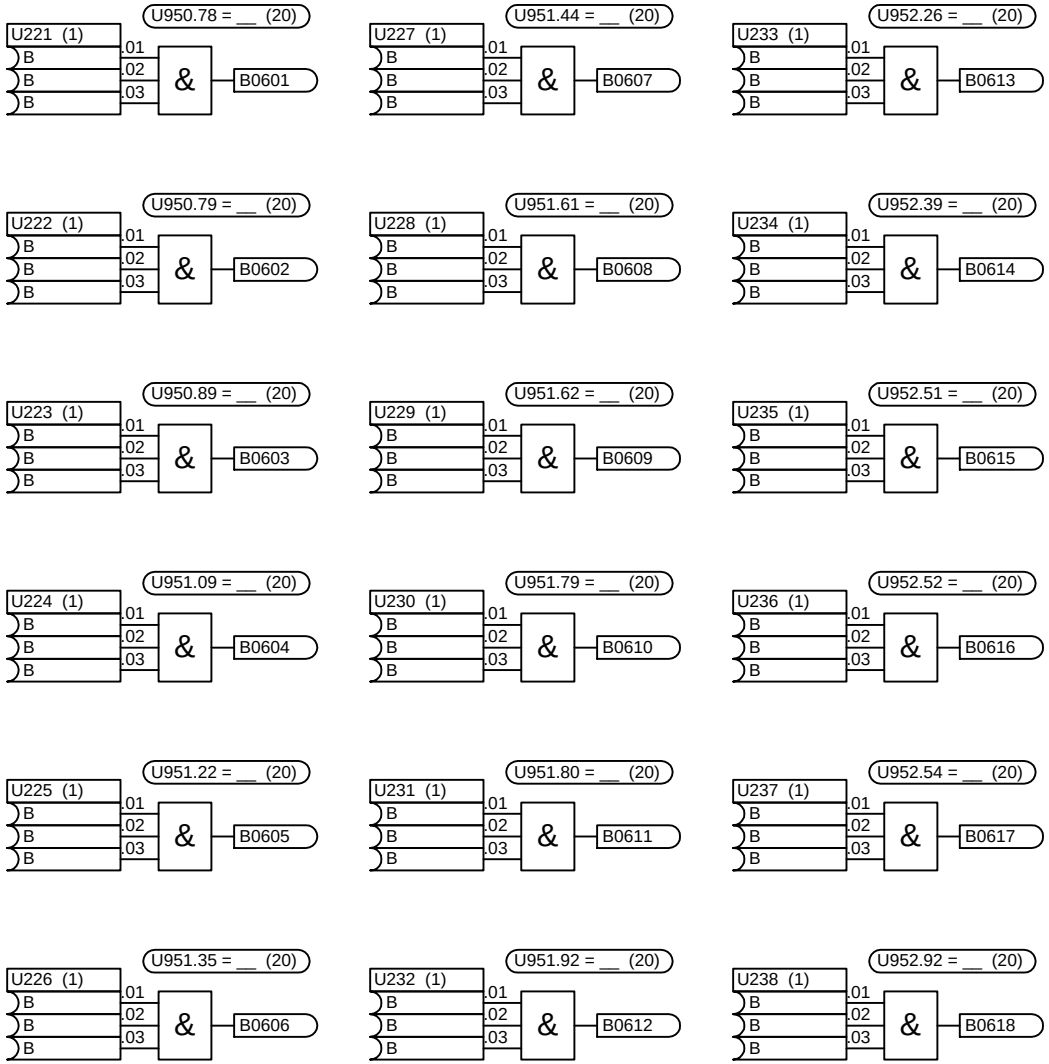

12 OR elements with 3 inputs each {3 µs}

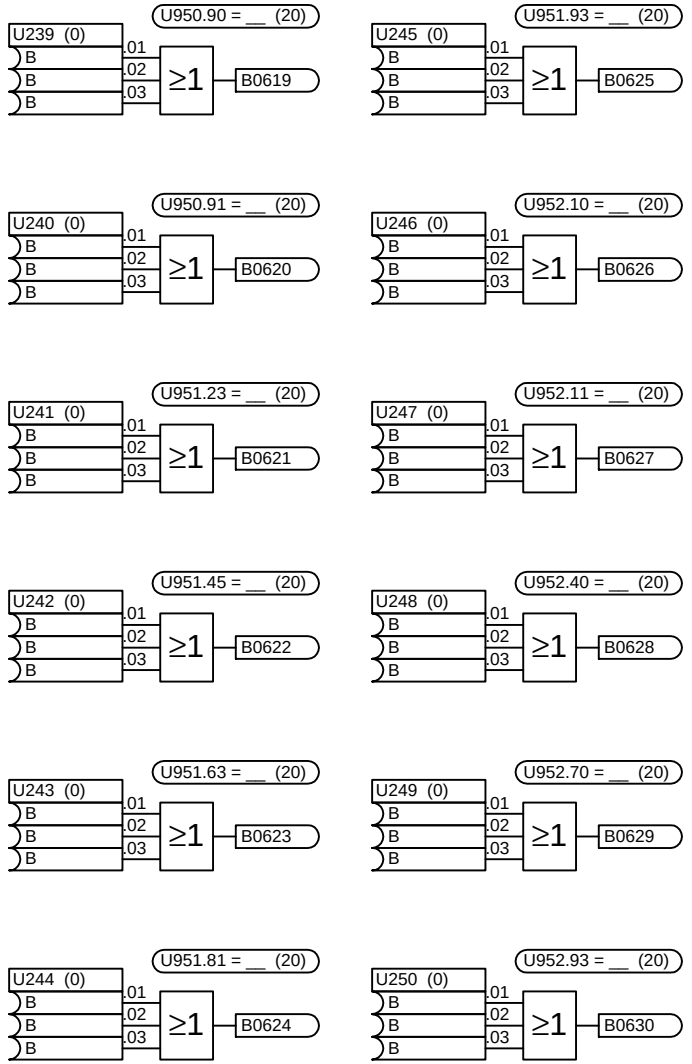

10 inverters {2 µs}

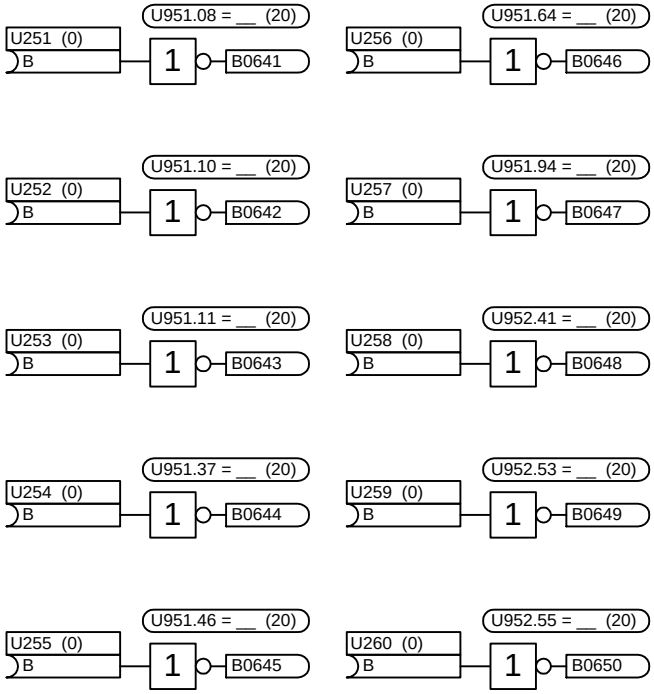

8 NAND elements with 3 inputs each {2 µs}

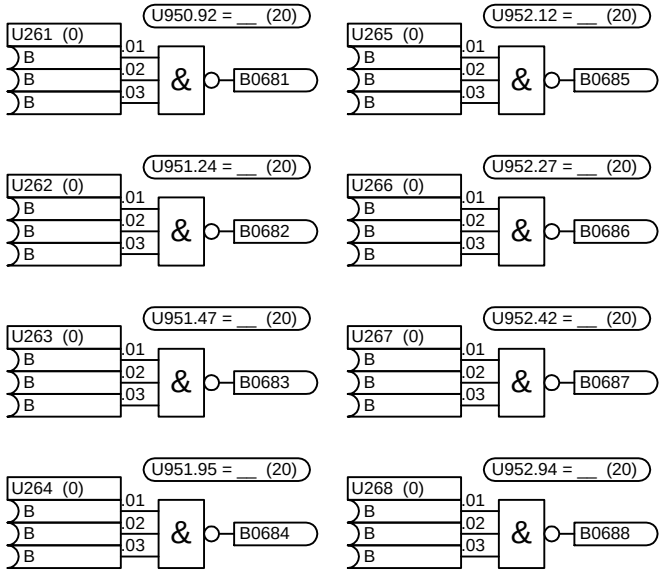

3 EXCLUSIVE OR elements {2 µs}

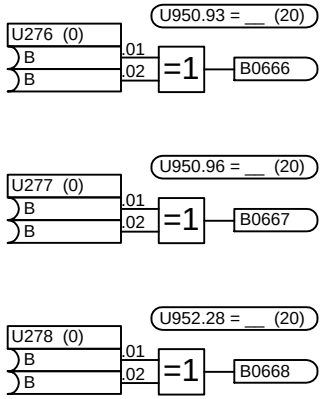

5 digital signal switches {2 µs}

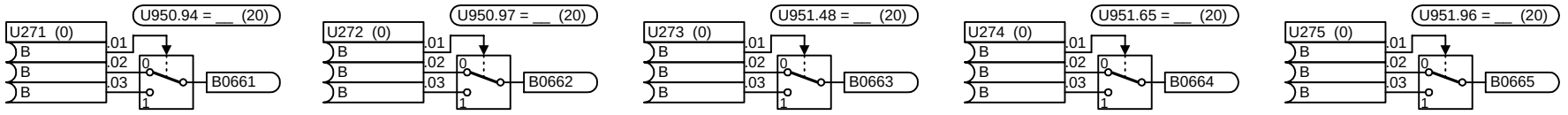

2 D flipflops {5 µs}

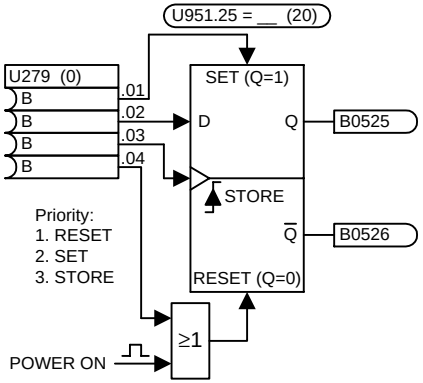

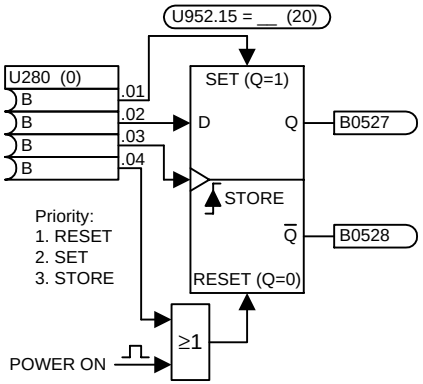

12 RS flipflops {3 µs}

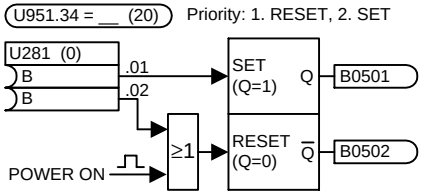

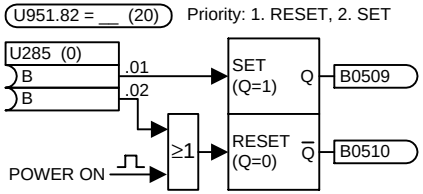

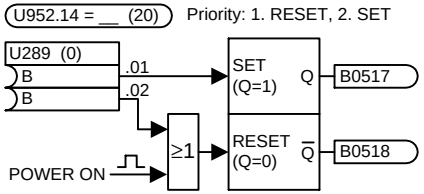

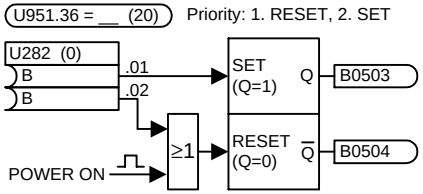

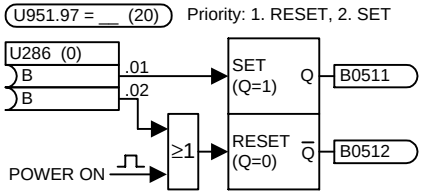

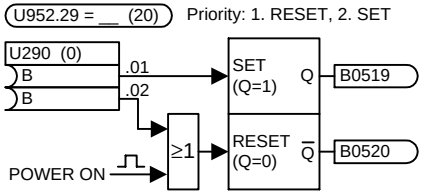

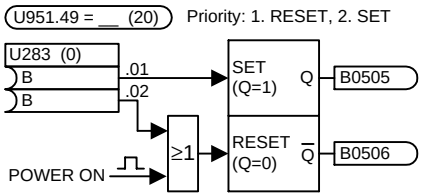

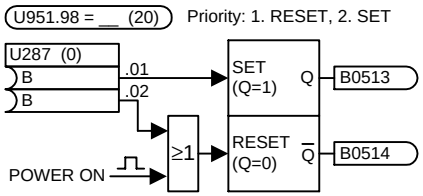

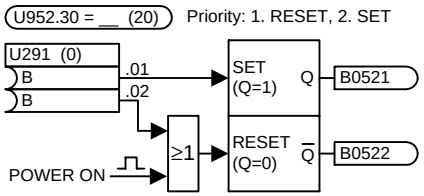

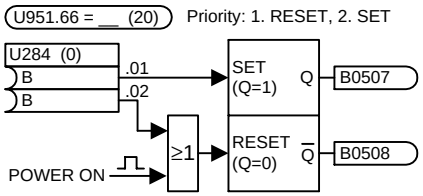

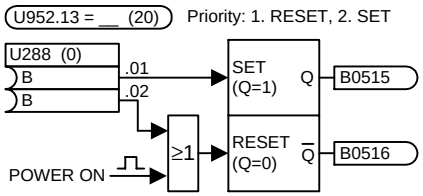

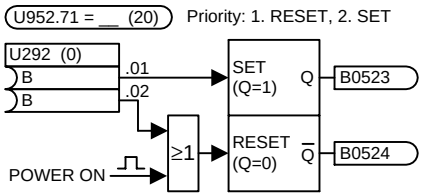

4 timers 0...60.000 s {11 µs}

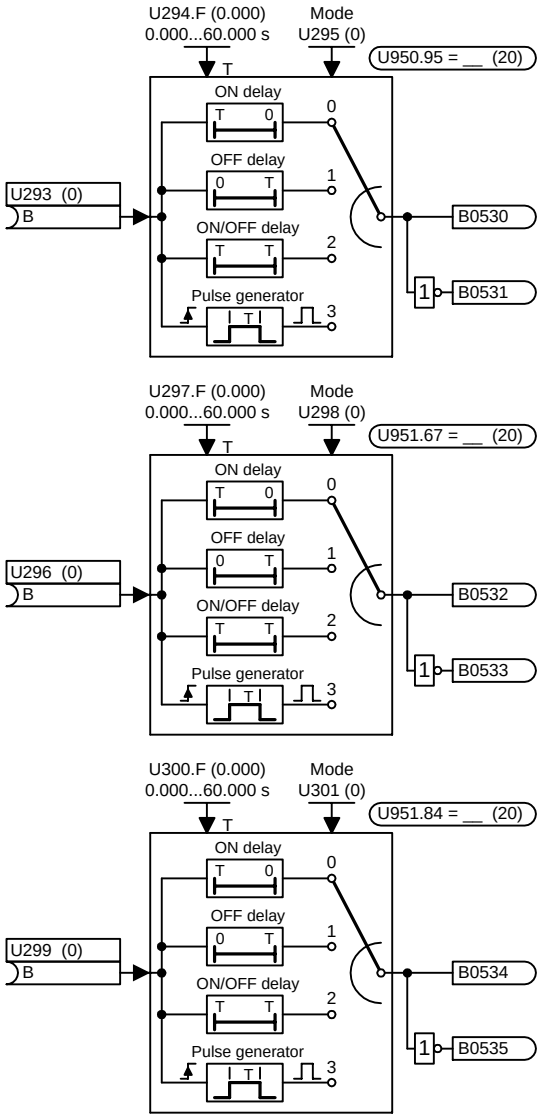

2 timers 0...600.00 s {11 µs}

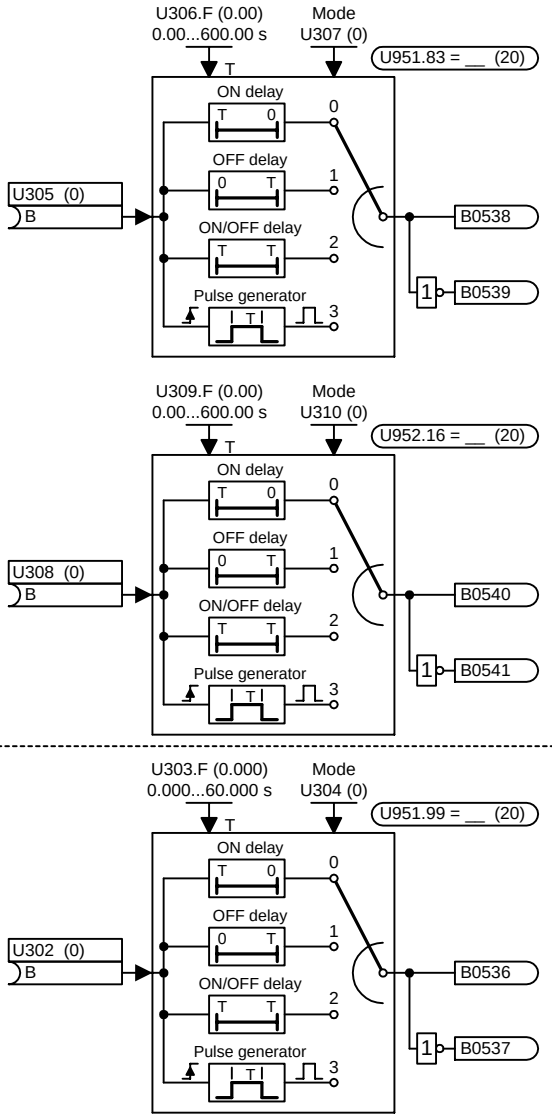

1 timer 0...60.000 s with adaption {21 µs}

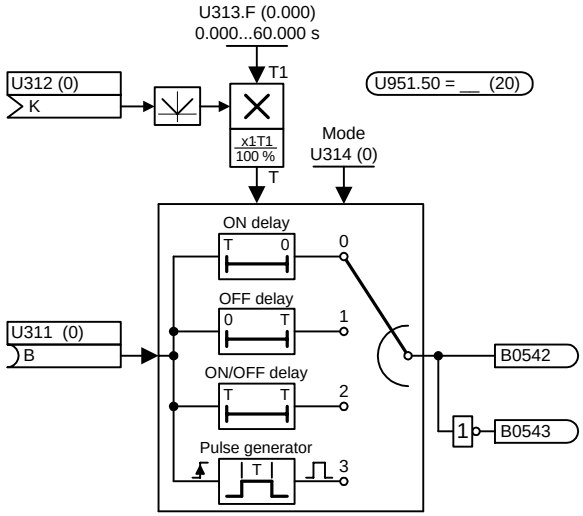

<1> Example: T1 = 40.000 s, x1 = 150 %
-> effective time T = 60 s
T is limited to the value range 0...60.000 s.

1	2	3	4	5	6	7	8
Free blocks				V1.6	fp_mc_780_e.vsd	Function diagram	- 780 -
Timers					08.01.02	MASTERDRIVES MC	

New Blocks (from V1.3 and higher)

1 Pulse generator (flash encoder) {5 µs / 15 µs if Tp is changed}

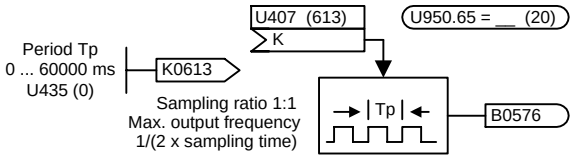

Note: The implemented period Tp is always an integral multiple of (2 x sampling time).

Example: Tab = 3.2 ms
Tp = 10 ms
Implemented period = 6.4 ms

6 sampling time changers for control signals {1 µs}

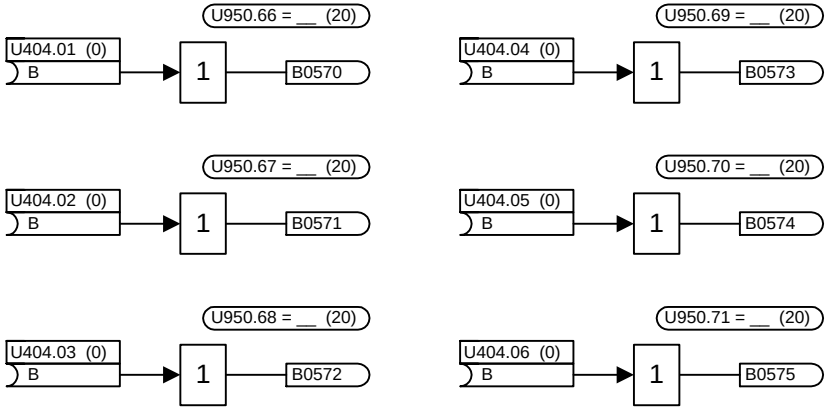

The block does not have any logic function.
It only transfers a digital signal consistently from a faster sampling time to a slower one.
The block ensures that the signal has the same value in the slow sampling time for all "consumers" (signal sinks).

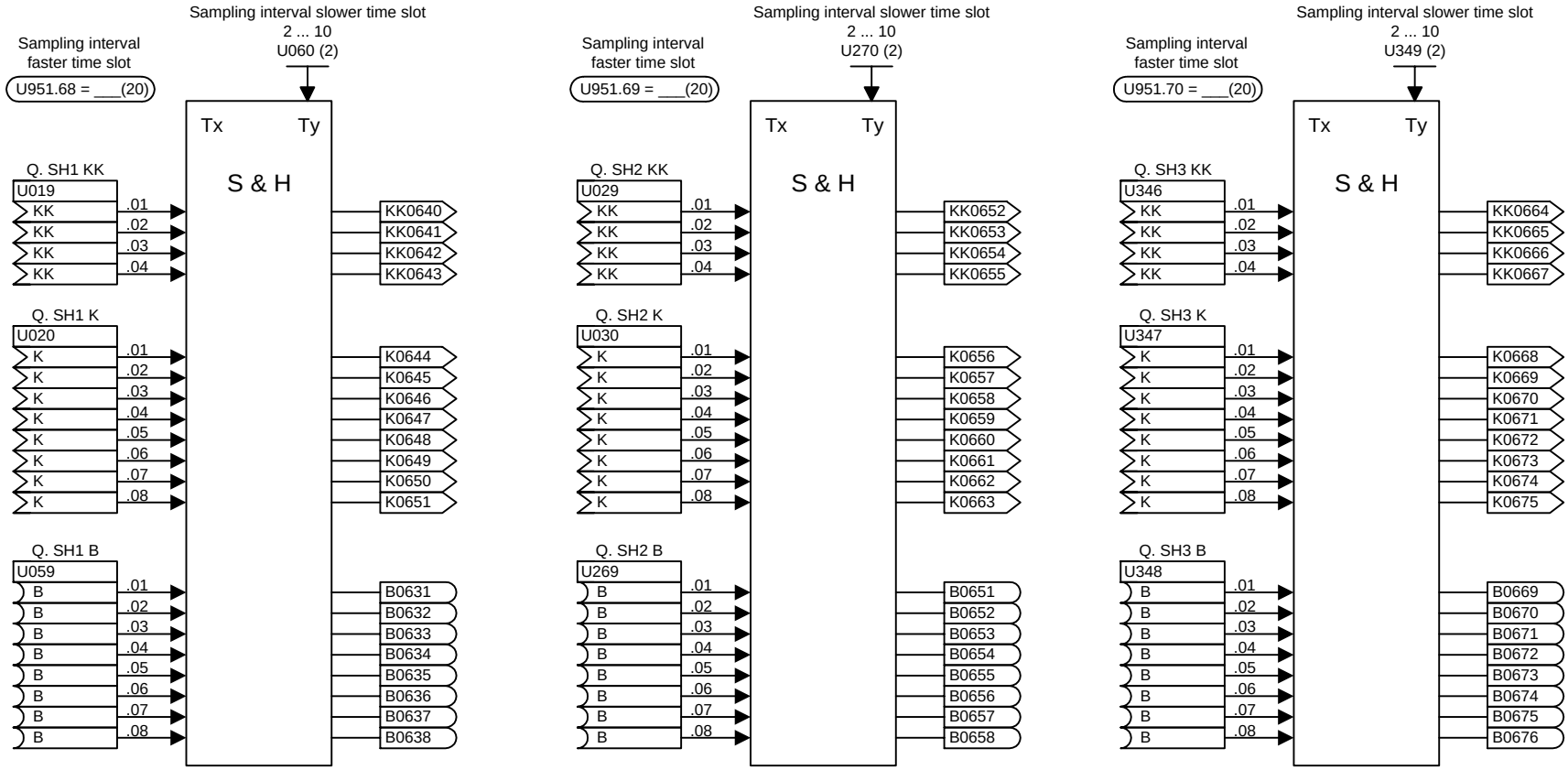

NOTE:
The following settings must be made to ensure consistent coupling of values from the main processor C167 to the DSP processor:
1. U95x.xx = 2
2. U96x.xx = 0
3. Enter S & H block outputs via P026 into coupling channels

U951.38 = ___(20)

Software counter 16 bit (maximum counting frequency: 1/ [2 x sampling time]) {8 µs}

<3>

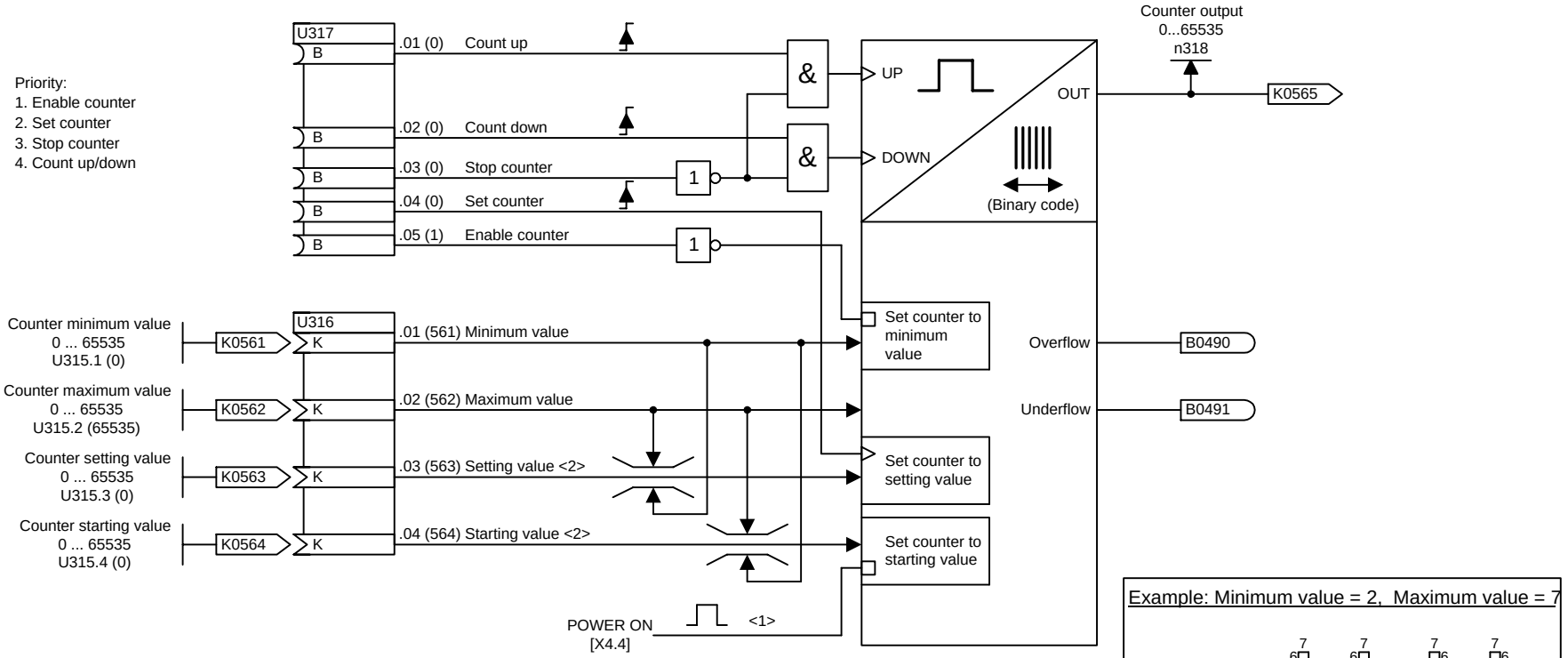

<1> After POWER ON the counter is set to the starting value.

<2> Starting value and setting value are limited to the range (minimum value... maximum value).

<3> Example: The counter is operating in the 3.2 ms time slot -> max. counting frequency 156 Hz.
Attention: The sampling time and sampling sequence of the upstream signal processing has to be taking into account!

Example: Minimum value = 2, Maximum value = 7

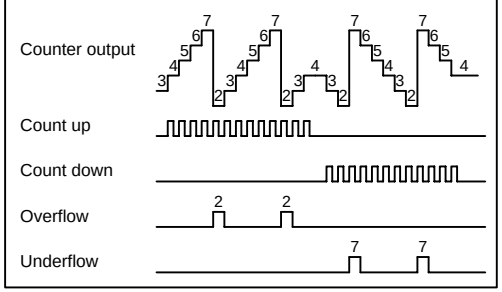

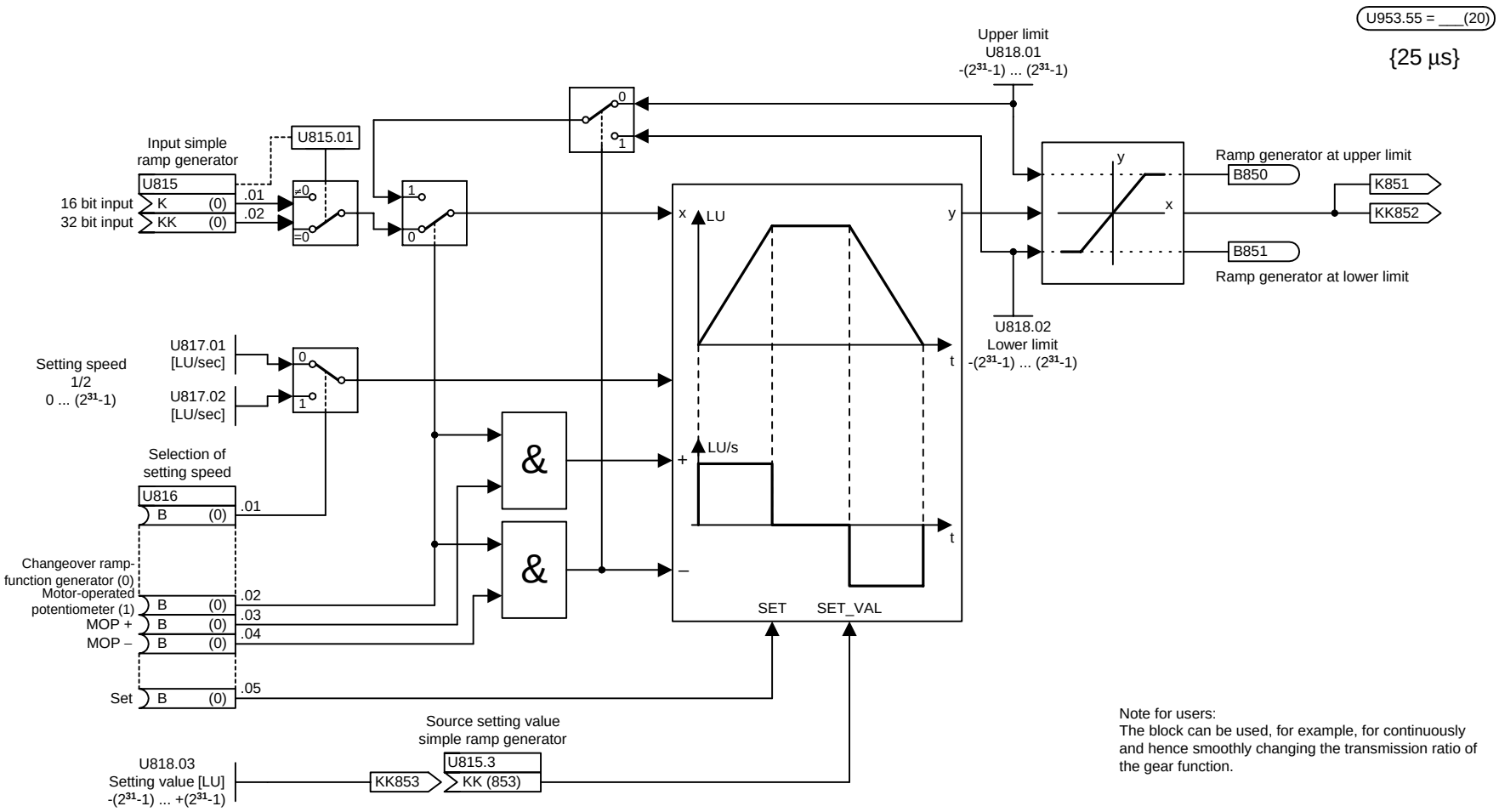

Note for users:
The block can be used, for example, for continuously and hence smoothly changing the transmission ratio of the gear function.

The ramp generator output takes over the value set at KK815.3 for as long as "Set" is at B816.5 = 1.
Y is always kept within the value range between the lower and upper limits. If during "Enable motor potentiometer" both signals MOP+ and MOP- are 1 simultaneously, output y remains unchanged.

1	2	3	4	5	6	7	8
Free blocks				V1.6	fp_mc_786a_e.vsd	Function diagram	- 786a -
Simple ramp-function generator 1 (32 Bit)					03.09.01	MASTERDRIVES MC	

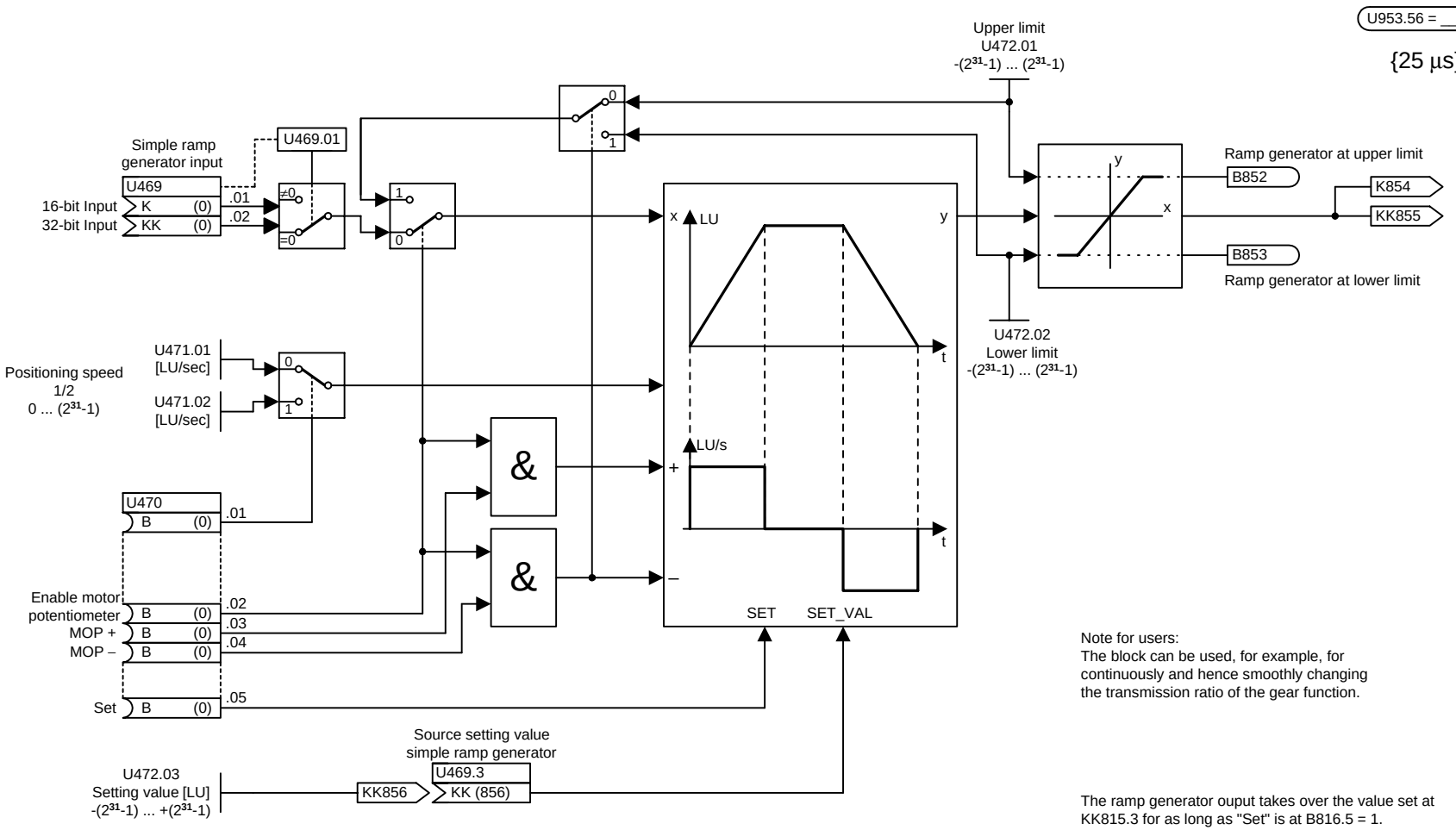

Note for users:
The block can be used, for example, for continuously and hence smoothly changing the transmission ratio of the gear function.

The ramp generator ouput takes over the value set at KK815.3 for as long as "Set" is at B816.5 = 1.
Y is always kept within the value range between the lower and upper limits. If during "Enable motor potentiometer" both signals MOP+ and MOP- are 1 simultaneously, output y remains unchanged.

1	2	3	4	5	6	7	8
Free blocks				V1.6	fp_mc_786b_e.vsd	Function diagram	- 786b -
Simple ramp-function generator 2 (32 Bit)					03.09.01	MASTERDRIVES MC	

U953.57 = ___(20)

{Calculating time without speed branch: 73µs}
{Calculating time with speed branch: 107µs}

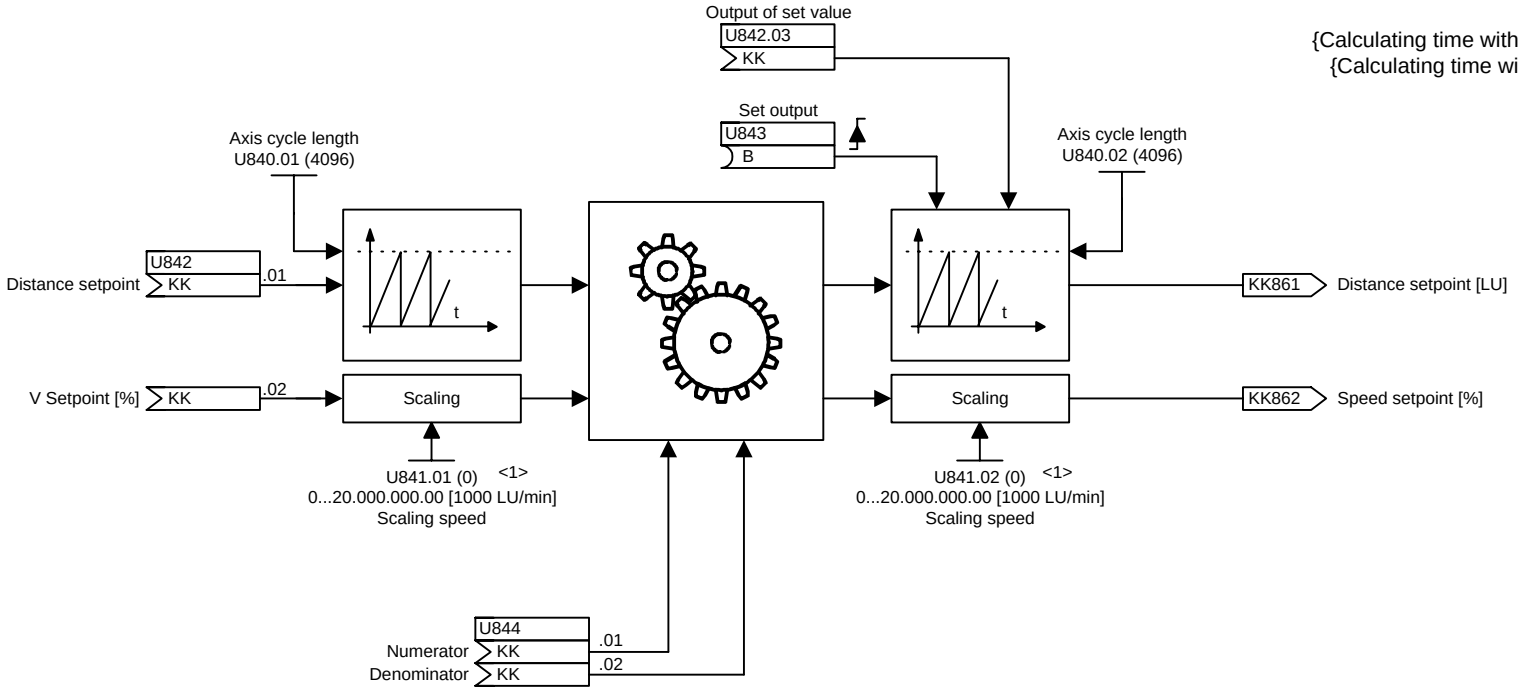

<1> The speed branch is only active if U841.01 and U841.02 are not equal to zero.

U953.58 = ___(20)

{Calculating time without speed branch: 73µs}
{Calculating time with speed branch: 107µs}

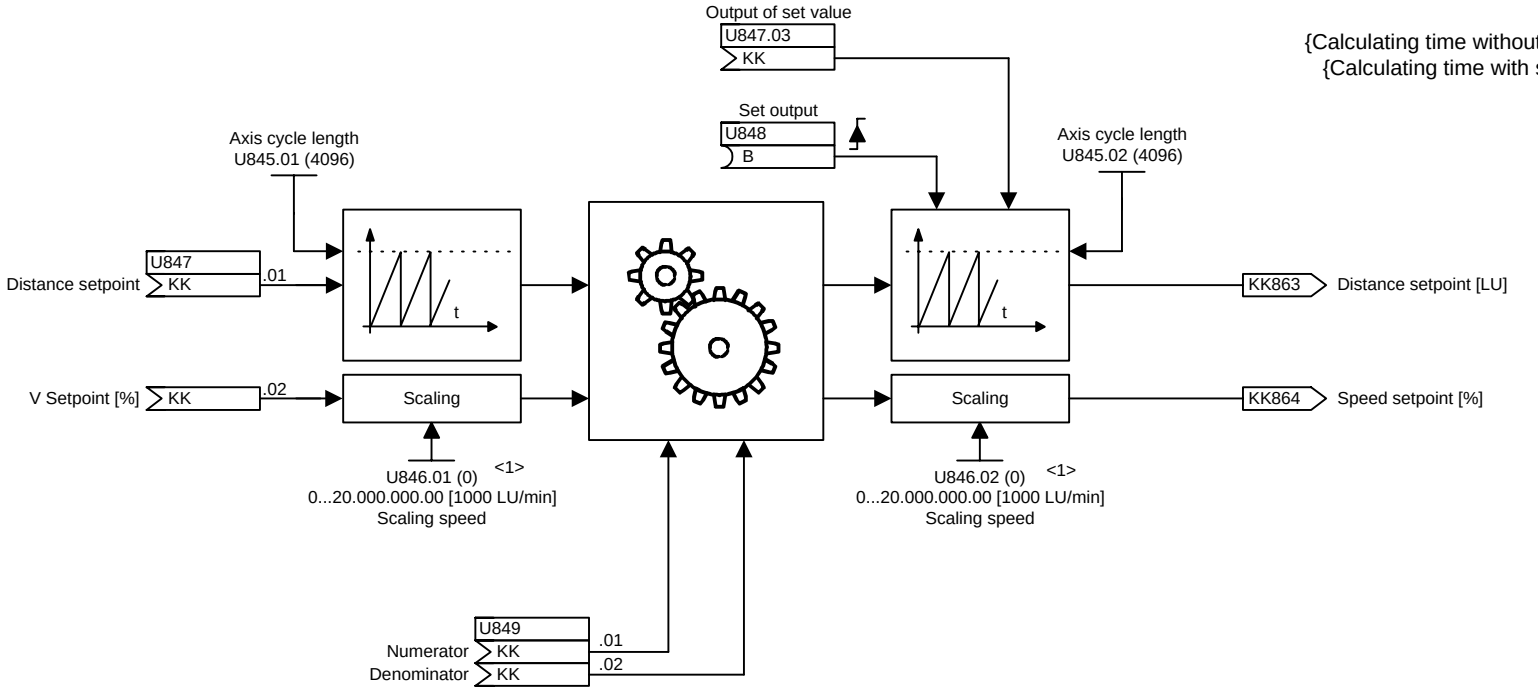

<1> The speed branch is only active if U846.01 and U846.02 are not equal to zero.

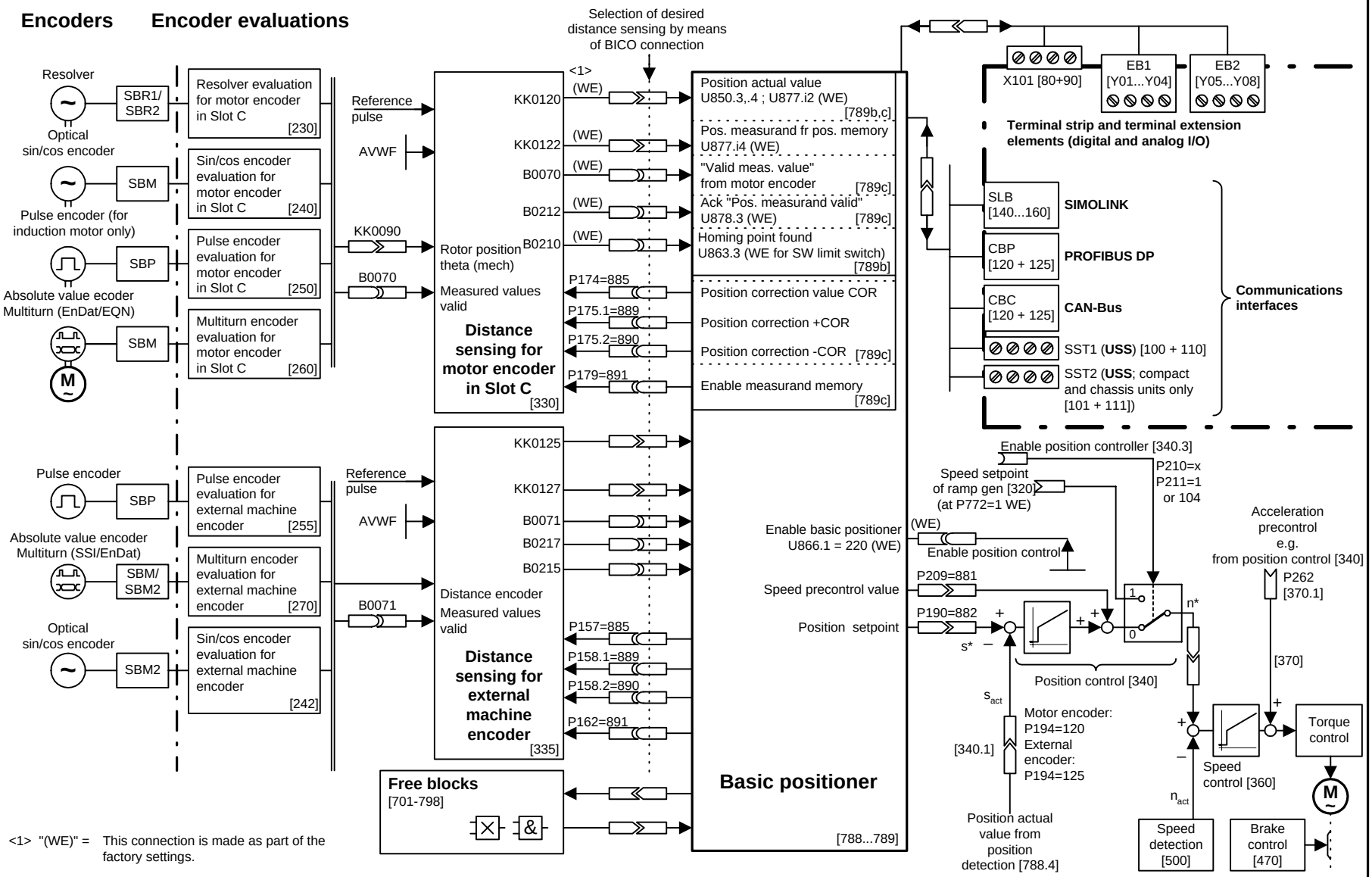

1	2	3	4	5	6	7	8
Free blocks				V1.6	fp_mc_788_e.vsd	Function diagram	- 788 -
Basic Positioner: Embedding in the Basic Unit					24.10.01	MASTERDRIVES MC	

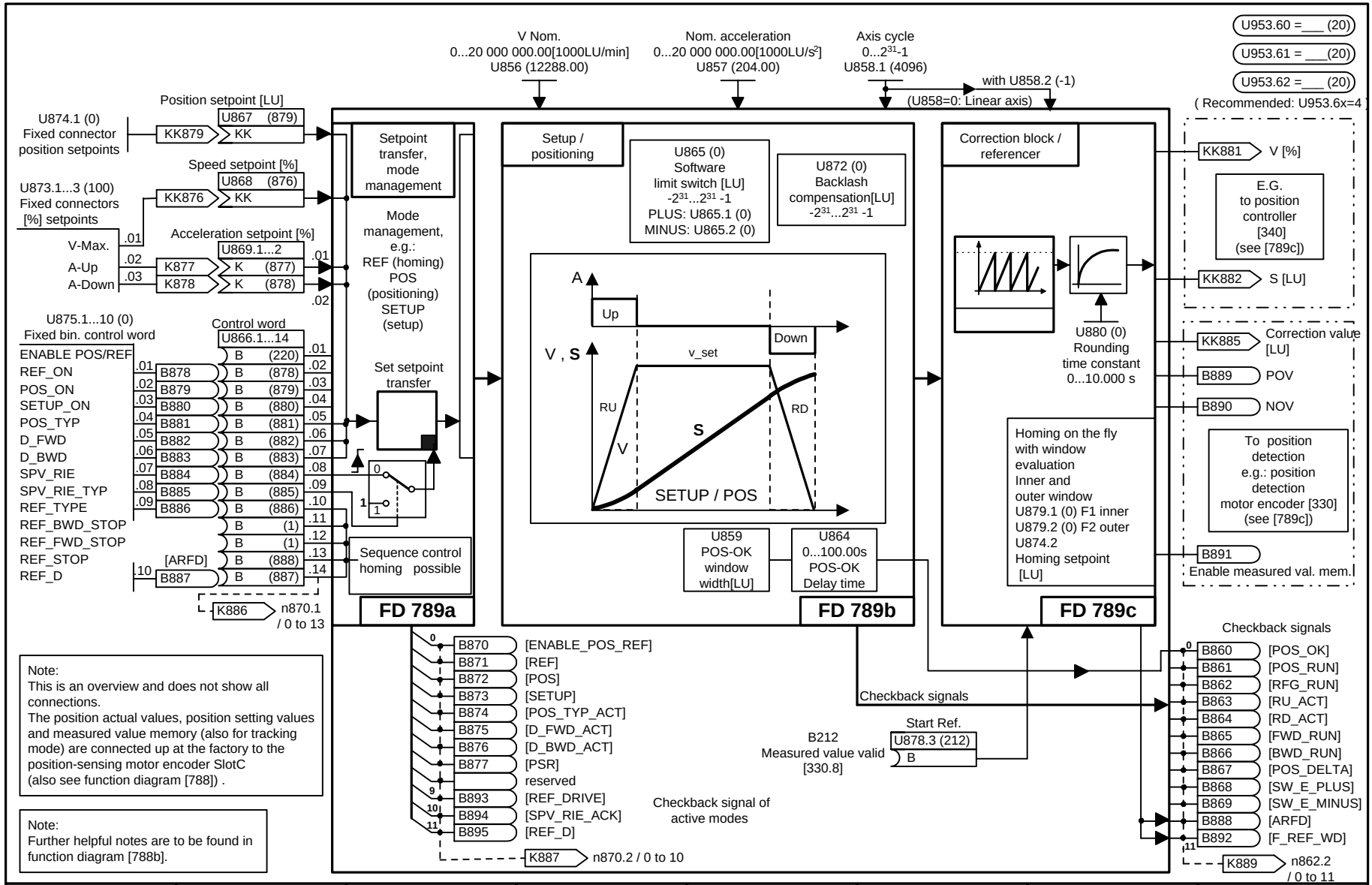

1	2	3	4	5	6	7	8
Free blocks				V1.6	fp_mc_788a_e.vsd	Function diagram	- 788a -
Basic Positioner Overview					24.10.01	MASTERDRIVES MC	

The basic positioner can be used for "simple" positioning tasks.

As can be seen from the "Overview" [788a], the basic positioner consists of three free blocks [789a, b, c] that are set at the factory for the function "Basic positioning **with motor encoder**" and are fully pre-wired among themselves. (The three blocks can also be used singly for further applications.) It is therefore only necessary to change the desired INPUTS ([788a] or in detail on [789a]) AND to wire the outputs ([788a] or in more detail [789c]) as recommended.
Enabling (ENABLE POS/REF) is implemented at the factory by means of the checkback signal "Position control enabled", i.e. the basic positioner is enable via the freely selectable source "Enable position controller" (P210, [340.4]).
A graphical overview is given in function diagram 788.

Since almost all variables of the basic positioner (including those between free blocks) are binector inputs/outputs or connector inputs/outputs, the function is controllable both with only one signal and also in parts with the desired process sequence / interlocking.
The user must therefore secure the desired function / motion.

A detailed description of the basic positioner is to be found in Section 7.2.3 of this Compendium MASTERDRIVES MC V1.50.

SHORT NOTES

- Concerning use of the basic positioner, insertion of the three free blocks into the T4 time slot is recommended (e.g. on account of the fixed time slot of the position detector motor encoder); i.e. U953.60 = 4, U953.61 = 4, U953.62 = 4

- PRIORITY Modes:
  Homing (REF_ON with REF_TYPE = 1) **>** positioning (POS_ON) **>** setup (SETUP).
  Homing on the fly (REF_ON with REF_TYPE = 0) is always possible, i.e. both in the case of positioning and in the case of setting up.
  The transitions occur "on the fly"; the priority always applies, even in the case of simultaneous selection of modes. It is therefore possible to change mode without bringing the axis to a stop.

- "Set-Setpoint-Transfer-Type" (SPV_RIE_TYP) on [789a]:
  - In the case of "Constant set-setpoint-transfer" (SPV_RIE_TYP = 1), all set-setpoint inputs are connected through at all times. **No** relative positioning is possible here (KK874 is set to 0 %).
  This also makes it possible, for example, to move the axis to a new position without additional binary control simply by changing the position setpoint.
  - In the case of "Transfer with positive edge" (SPV_RIE_TYP = 0 and pos. edge via SPV_RIE), the user can set new setpoints with edge control.

- Direction of rotation of the axis: D_FWD, D_BWD, sign position setpoint ([788a] or in more detail [789a]).
  In the case of the linear axis (U858=0), the position setpoint determines the direction of rotation of the axis. In the case of relative positioning it is the sign of the position setpoint that determines the direction of rotation. In the case of absolute positioning of the rotary axis and setup, control binectors D_FWD and D_BWD determine this. (Both HIGH: Axis is stopped // Both LOW with abs.-pos.-rotary-axis : shortest distance).
  In the case of homing, D-FWD and D_BWD determine the starting direction.

- In the case of relative positioning, "distance to go" does not apply; i.e. renewed POS_ON or SPV_RIE causes renewed travel to an existing relative position setpoint.

- Software limit switches [789b.1]: Please note that the software limit switches need only be activated for the linear axis (U858 (AZL) = 0) and via U865 (end zones).
  Furthermore, the software limit switches are arranged at the factory for activation via freely parameterizable input U863.2,.3 with "Axis homing" [ARFD] OR "Homing point captured" (B210, [330.7] - cannot be changed by the user.

- Standardizations: As with technology option F01 (Section 9 of this Compendium MASTERDRIVES MC), the same applies here mutatis mutandis, e. g. factory default configuration with motor encoder:
  V nom. = Resolution x position-feedback scaling factor x reference speed x 10^{-3}
  with: V nom.: U856 [788a or 789b] and P205 [340.3] // Resolution: P171 [330.3] // position-feedback scaling factor: P169,P170 or P180, P181 [330.3] // reference speed: P353 [20.5]

- The basic positioner itself generates **no** fault or warning messages (but these can be configured in basic unit functions or other free blocks).
  For the user, this opens up a wide variety of solutions with regard to type of motion; naturally, the types of motion in question must also yield the desired inputs and interlockings.

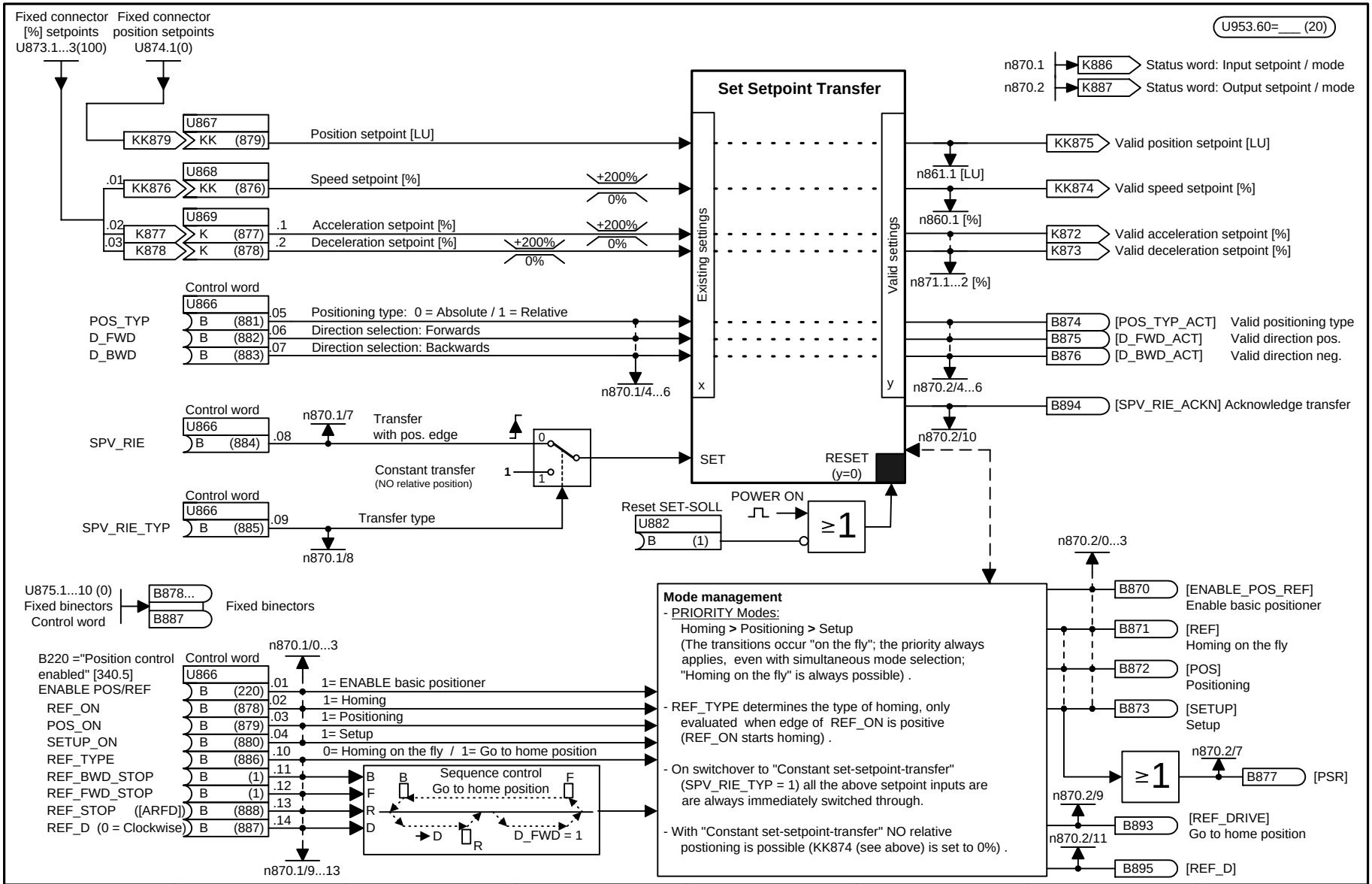

1	2	3	4	5	6	7	8
Free blocks				V1.6	fp_mc_789a_e.vsd	Function diagram	- 789a -
Basic Positioner: Setpoint Transfer and Mode Management					24.10.01	MASTERDRIVES MC	

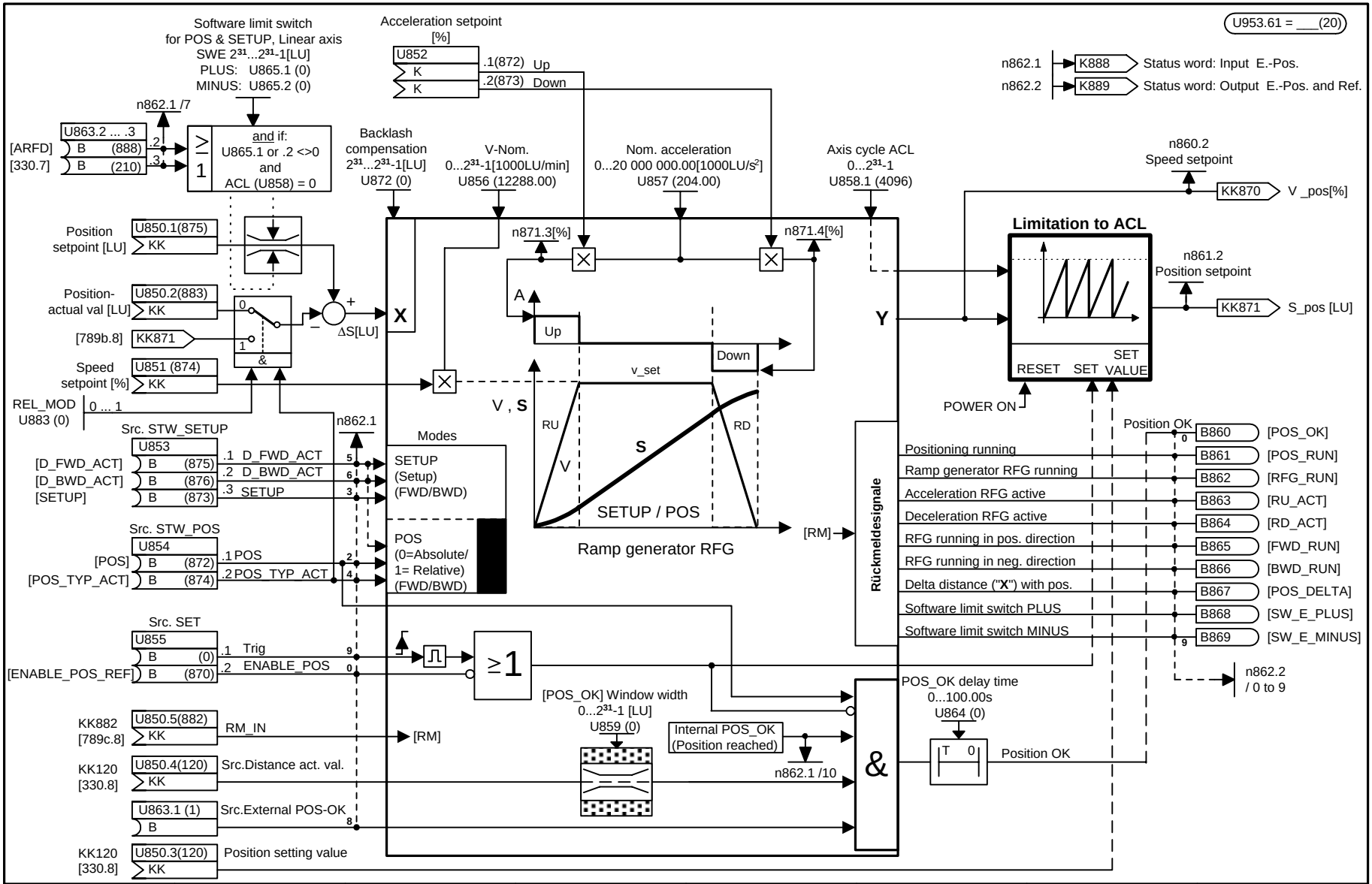

1	2	3	4	5	6	7	8
Free blocks				V1.6	fp_mc_789b_e.vsd	Function diagram	- 789b -
Basic Positioner: Setup/Positioning					30.08.01	MASTERDRIVES MC	

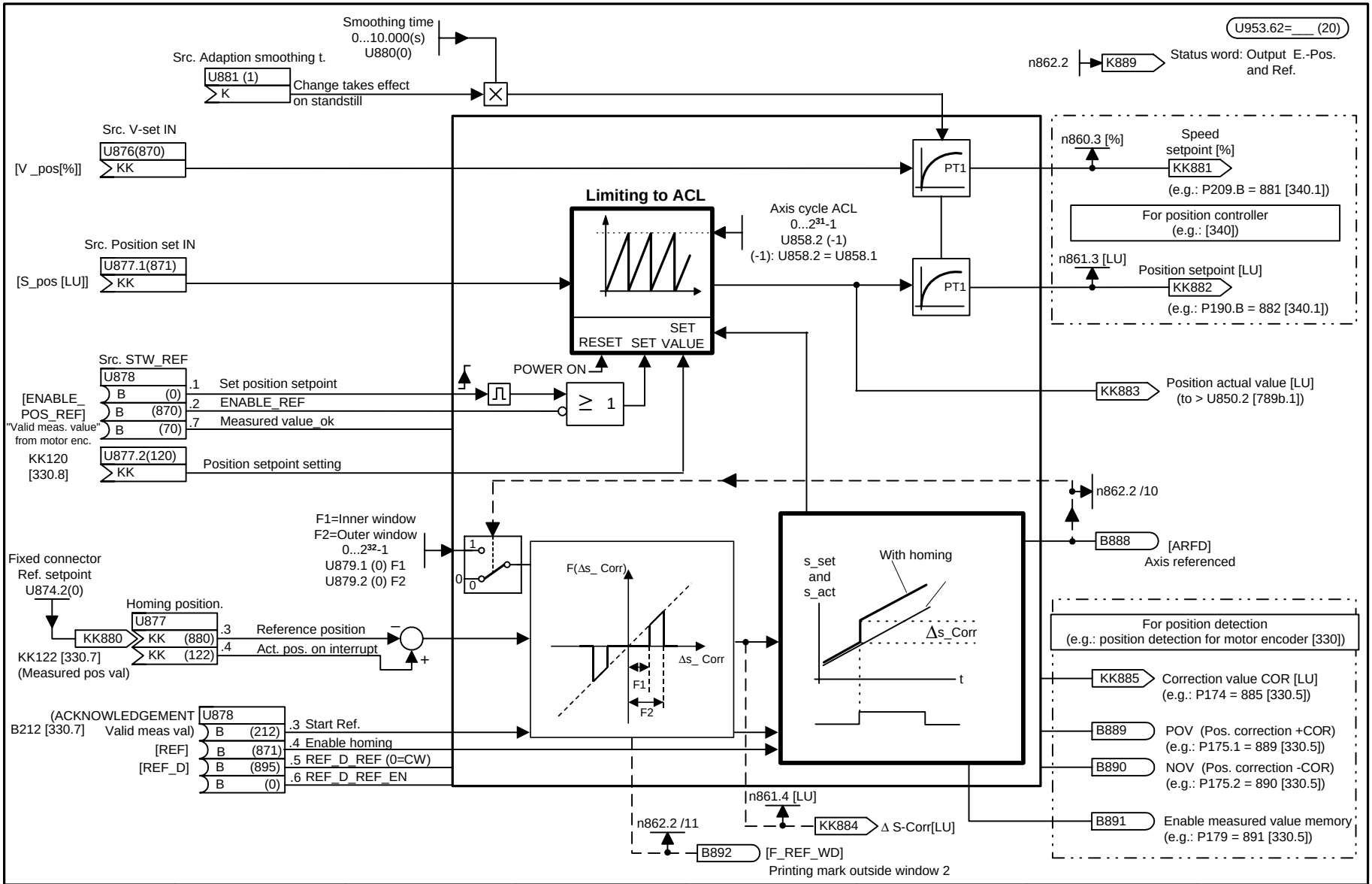

1	2	3	4	5	6	7	8
Free blocks				V1.6	fp_mc_789c_e.vsd	Function diagram	- 789c -
Basic Positioning: Correction Block / Homing					24.10.01	MASTERDRIVES MC	

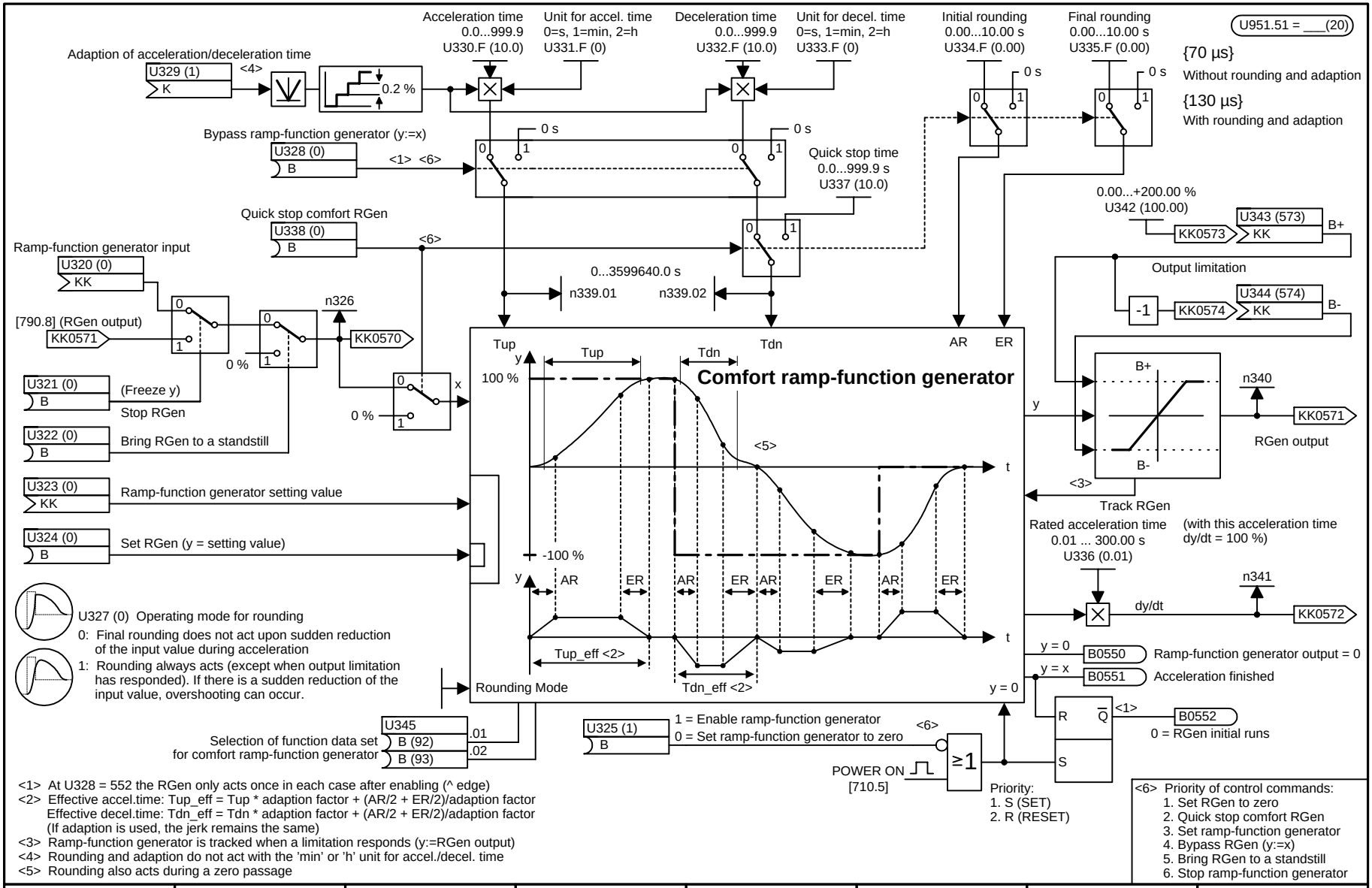

<1> At U328 = 552 the RGen only acts once in each case after enabling (^ edge)
<2> Effective accel.time: Tup_eff = Tup * adaption factor + (AR/2 + ER/2)/adaption factor
Effective decel.time: Tdn_eff = Tdn * adaption factor + (AR/2 + ER/2)/adaption factor
(If adaption is used, the jerk remains the same)
<3> Ramp-function generator is tracked when a limitation responds (y:=RGen output)
<4> Rounding and adaption do not act with the 'min' or 'h' unit for accel./decel. time
<5> Rounding also acts during a zero passage

1	2	3	4	5	6	7	8
Free blocks				V1.6	fp_mc_790_e.vsd	Function diagram	- 790 -
Comfort ramp-function generator					08.01.02	MASTERDRIVES MC	

Virtual Master {28 µs}

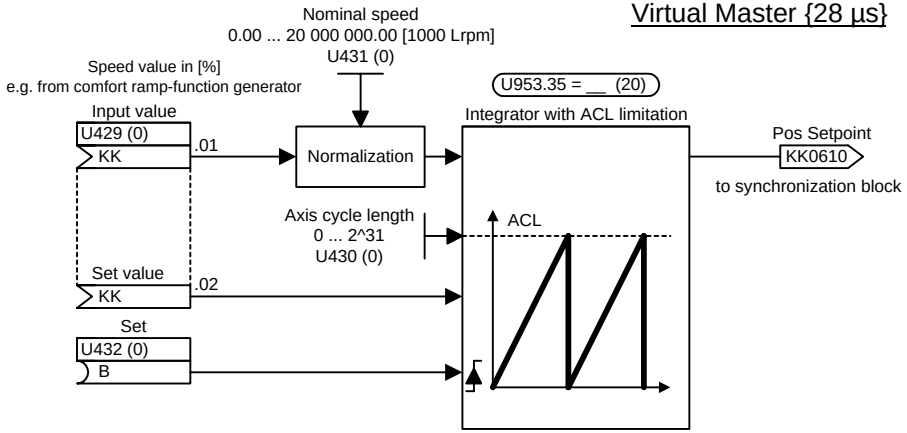

Simple ramp-function generator {12 µs}

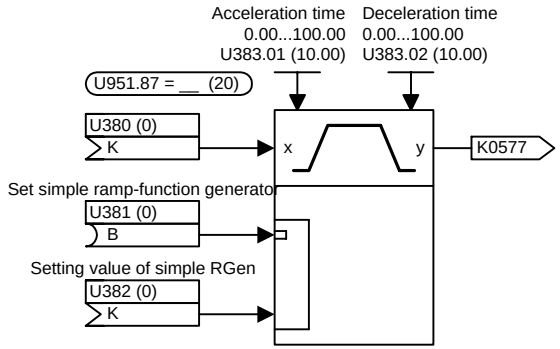

If you wish to use the simple ramp-function generator as a setpoint ramp function generator
for the technology controller, the following signal connection can be recommended:

- Output of simple ramp-function generator	==> Setpoint input of technology controller	(U352 = 577) [792.1]
- Technology controller disabled	==> Set simple ramp-function generator	(U381 = 556) [792.3]
- Actual-value technology controller	==> Setting value of simple ramp-function generator	(U382 = value of U335) [792.1]

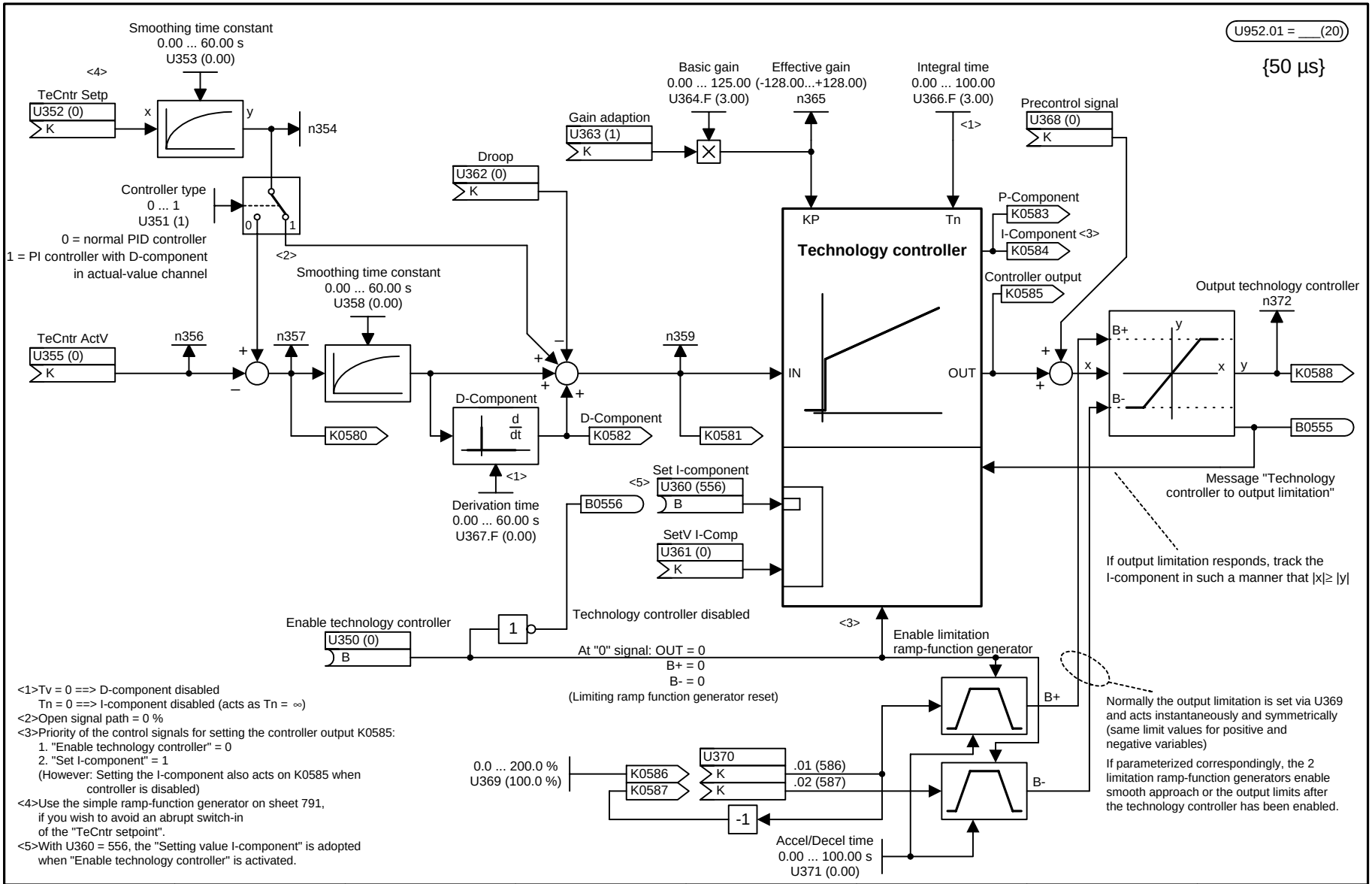

<1>Tv = 0 ==> D-component disabled
Tn = 0 ==> I-component disabled (acts as Tn = ∞)
<2>Open signal path = 0 %
<3>Priority of the control signals for setting the controller output K0585:
1. "Enable technology controller" = 0
2. "Set I-component" = 1
(However: Setting the I-component also acts on K0585 when controller is disabled)
<4>Use the simple ramp-function generator on sheet 791, if you wish to avoid an abrupt switch-in of the "TeCntr setpoint".
<5>With U360 = 556, the "Setting value I-component" is adopted when "Enable technology controller" is activated.

Function Block, Setpoint Supply SIMOLINK Encoder SLE

U953.28 = __ (20)

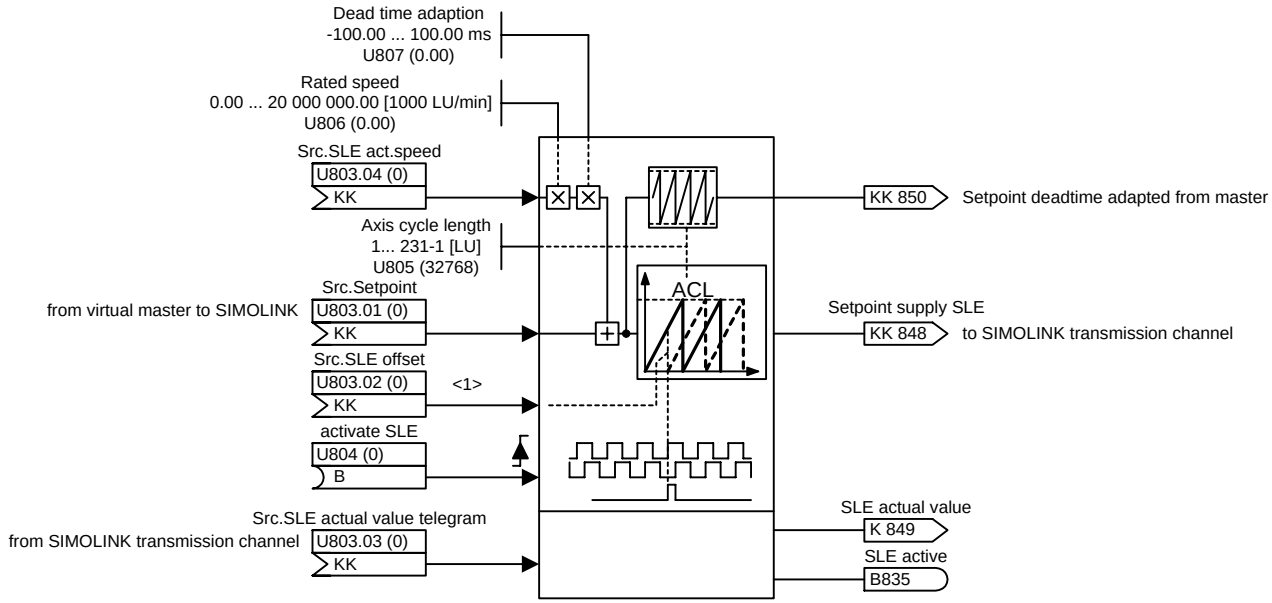

Data format setpoint:

31		17	16	15		1	0
Setpoint (0...32767)			x	Setting value (0...32767)			Bit

Setpoint: Position setpoint of the master axis
Setting value: Position of the zero pulse referred to the master axis
Bit: 0 = SLE deactivated; 0->1 Load SLE with setting value; 1 = SLE active

Data format actual value:

31		17	16	15		1	0
Actual value (0...32767)			x	x			Bit

Actual value: SLE actual value
Bit: 0 = Not initialized; 1 = SLE active

<1>
Offset gives the position of the zero pulse relative to the setpoint (U803.01).
With rising edge at U804.

The function block is used for simple setpoint correction of the SIMOLINK Encoder SLE (Order No. 6SX7005-0AG0). The Handbook "SLE/SLE-DP SIMOLINK Encoder" describes the SIMOLINK Encoder and the function block and also contains notes on configuring.

{Calculating time in no-load status: 35µs}
{Calculating time during compensation movement after start +/-: 84µs}

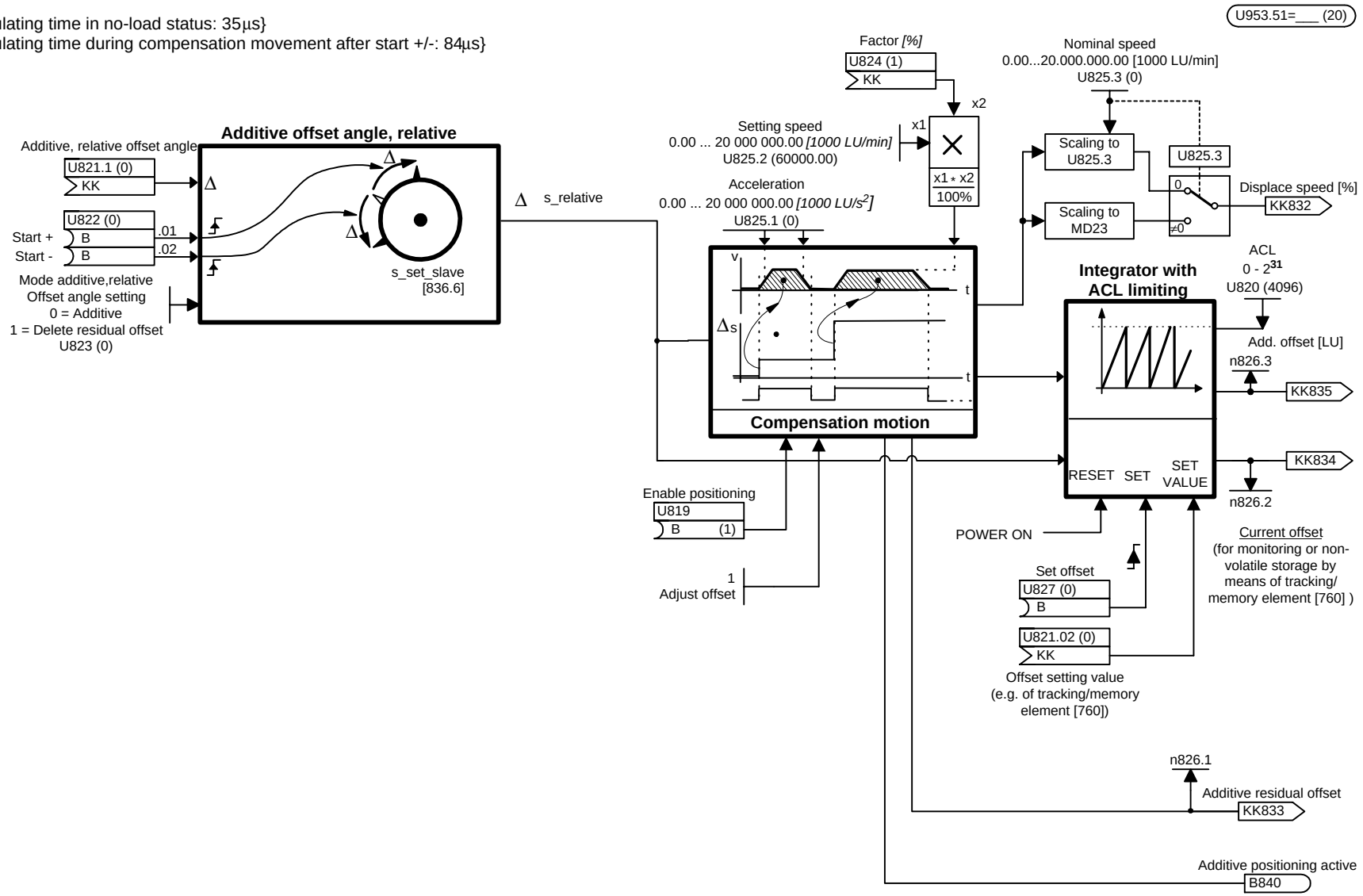

1	2	3	4	5	6	7	8
Free blocks				V1.6	fp_mc_794_d.vsd	Function diagram	- 794 -
Additive Relative Offset Angle Setting(introduced with V1.4)					03.09.01	MASTERDRIVES MC	

U953.52=___ (20)

Offset adder with limitation to ACL {27 µs}

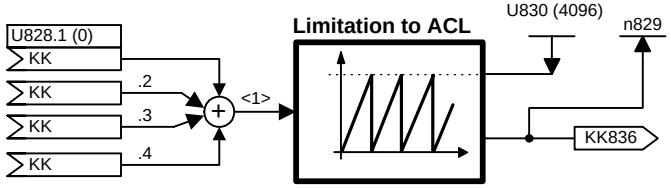

U953.53=___ (20)

Offset adder 2 with limitation to ACL {27 µs}

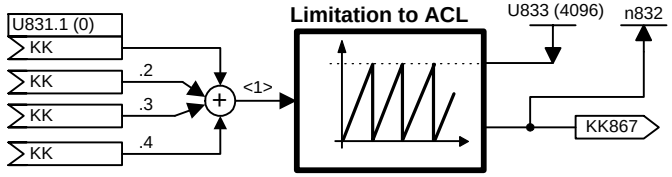

U953.54=___ (20)

Offset adder 3 with limitation to ACL {27 µs}

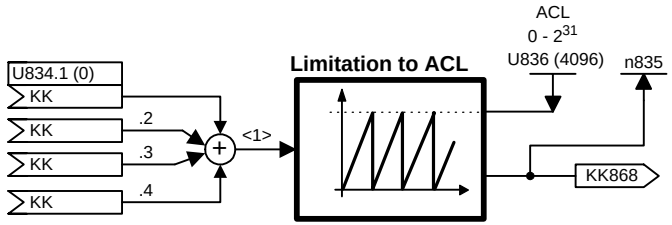

<1> The sum of the four input values must be in the range of $(-2^{31}+1)$ to $(2^{31}-1)$.

1	2	3	4	5	6	7	8
Free blocks				V1.6	fp_mc_794_d.vsd	Function diagram	- 794a -
Offset Adder with Limitation to ACL					03.09.01	MASTERDRIVES MC	

U952.02 = ___(20)

Wobble generator {83 µs}

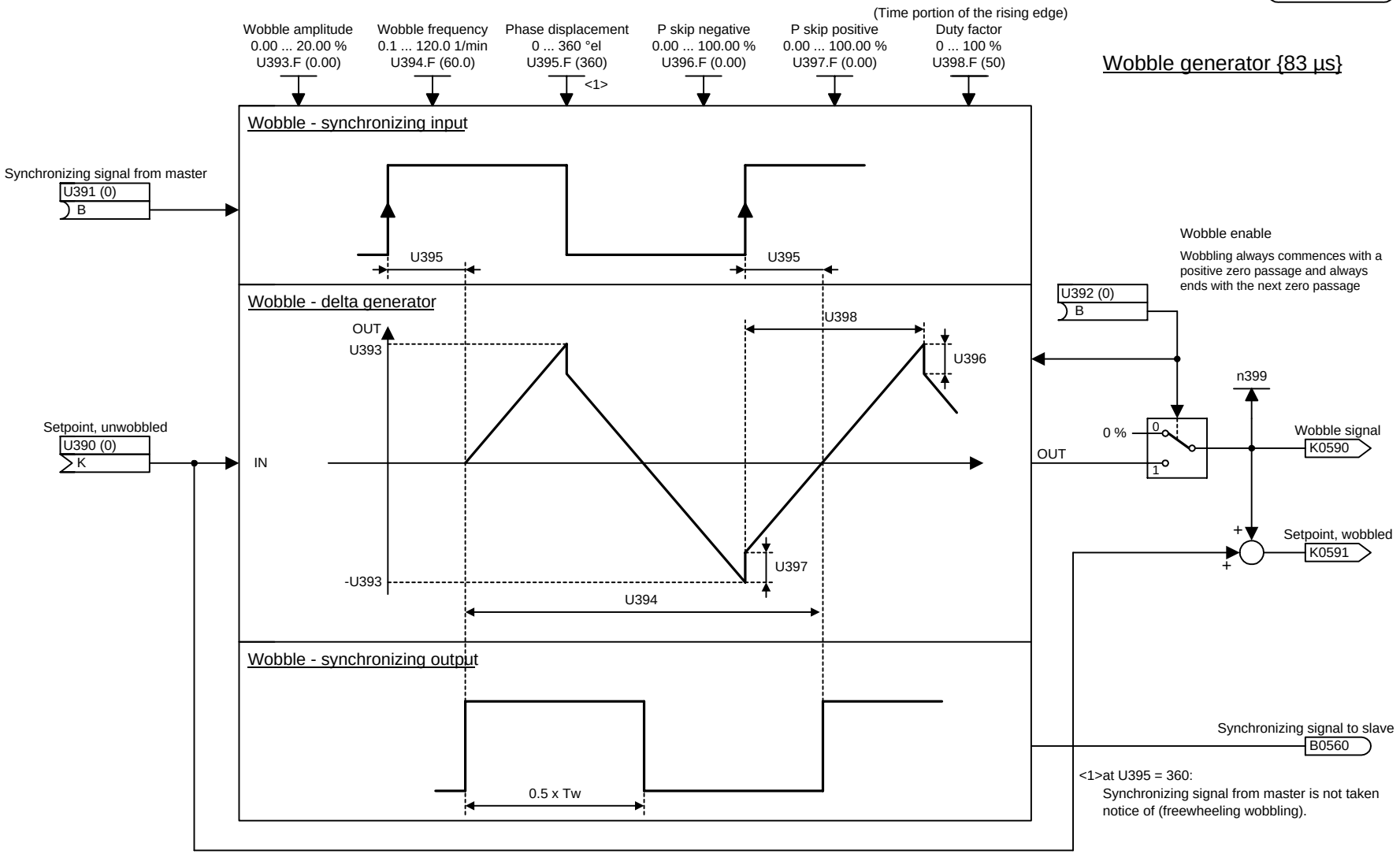

<1>at U395 = 360:
Synchronizing signal from master is not taken notice of (freewheeling wobbling).

1	2	3	4	5	6	7	8
Free blocks				V1.6	fp_mc_795_e.vsd	Function diagram	- 795 -
Wobble generator					08.01.02	MASTERDRIVES MC	

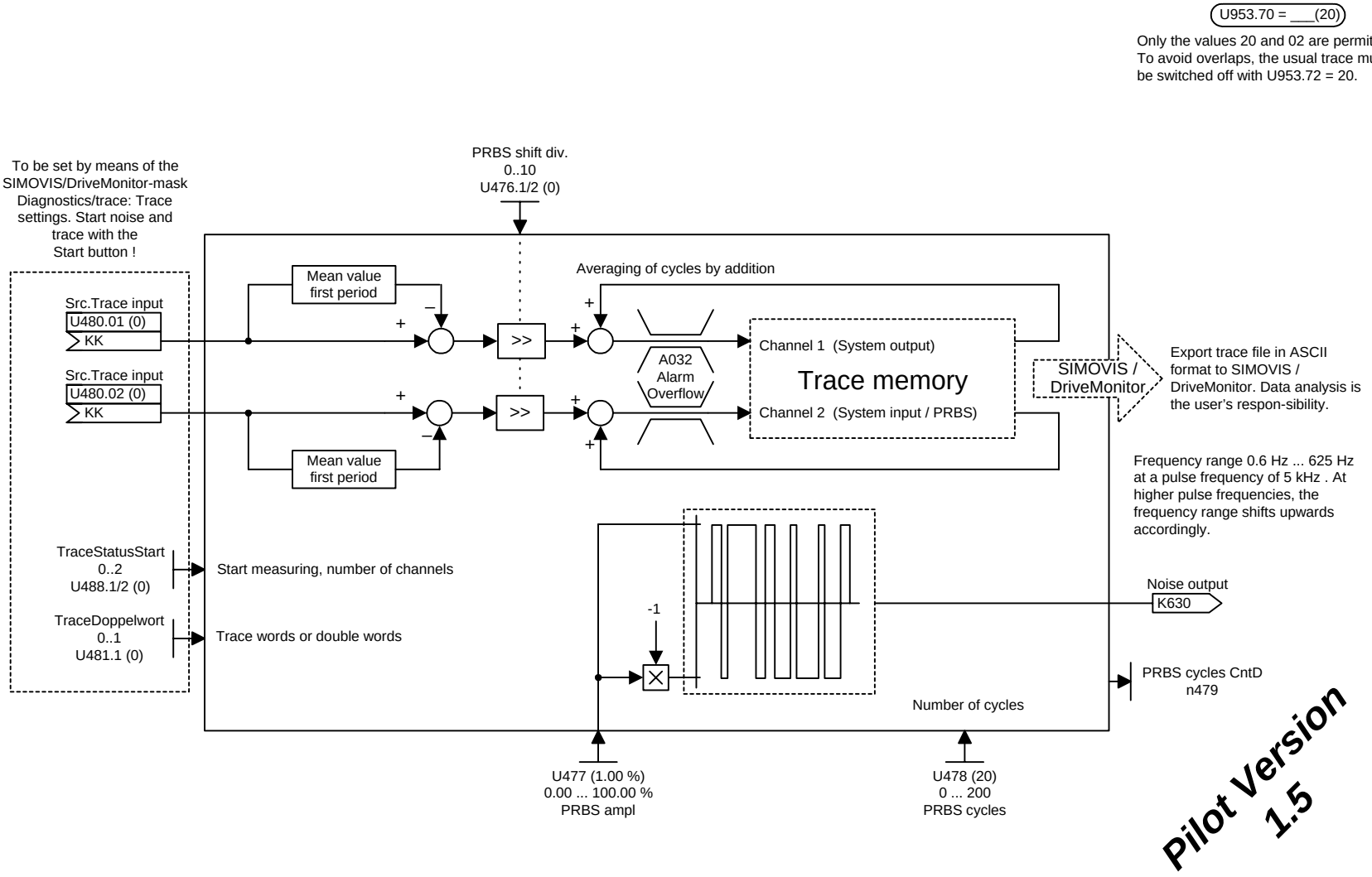
U953.70 = ___(20)
Only the values 20 and 02 are permitted. To avoid overlaps, the usual trace must be switched off with U953.72 = 20.
To be set by means of the SIMOVIS/DriveMonitor-mask Diagnostics/trace: Trace settings. Start noise and trace with the Start button !
PRBS shift div.
0..10
U476.1/2 (0)
Averaging of cycles by addition
Mean value first period
Src.Trace input
U480.01 (0)
KK
Src.Trace input
U480.02 (0)
KK
>>
>>
A032
Alarm
Overflow
Channel 1 (System output)
Trace memory
Channel 2 (System input / PRBS)
SIMOVIS / DriveMonitor
Export trace file in ASCII format to SIMOVIS / DriveMonitor. Data analysis is the user's respon-sibility.
Mean value first period
Frequency range 0.6 Hz ... 625 Hz at a pulse frequency of 5 kHz . At higher pulse frequencies, the frequency range shifts upwards accordingly.
TraceStatusStart
0..2
U488.1/2 (0)
Start measuring, number of channels
TraceDoppelwort
0..1
U481.1 (0)
Trace words or double words
-1
Noise output
K630
PRBS cycles CntD
n479
Number of cycles
U477 (1.00 %)
0.00 ... 100.00 %
PRBS ampl
U478 (20)
0 ... 200
PRBS cycles
Pilot Version 1.5

Record Trace

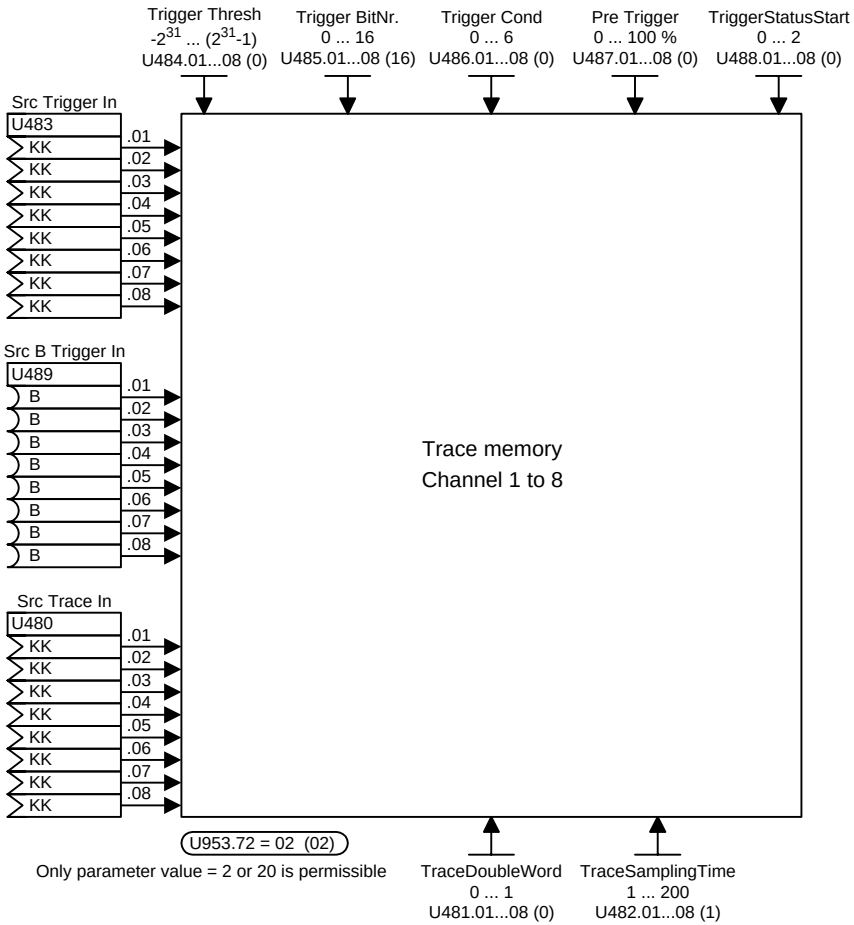

The trace memory has a total size of 4096 words.
Memory depth per channel = 4096 words / number of activated channels

Binector trigger input U489 from V1.40 onwards
Trace function detachable (U953.72) from V1.40 onwards

Trace: cyclical output channel 1 to 8

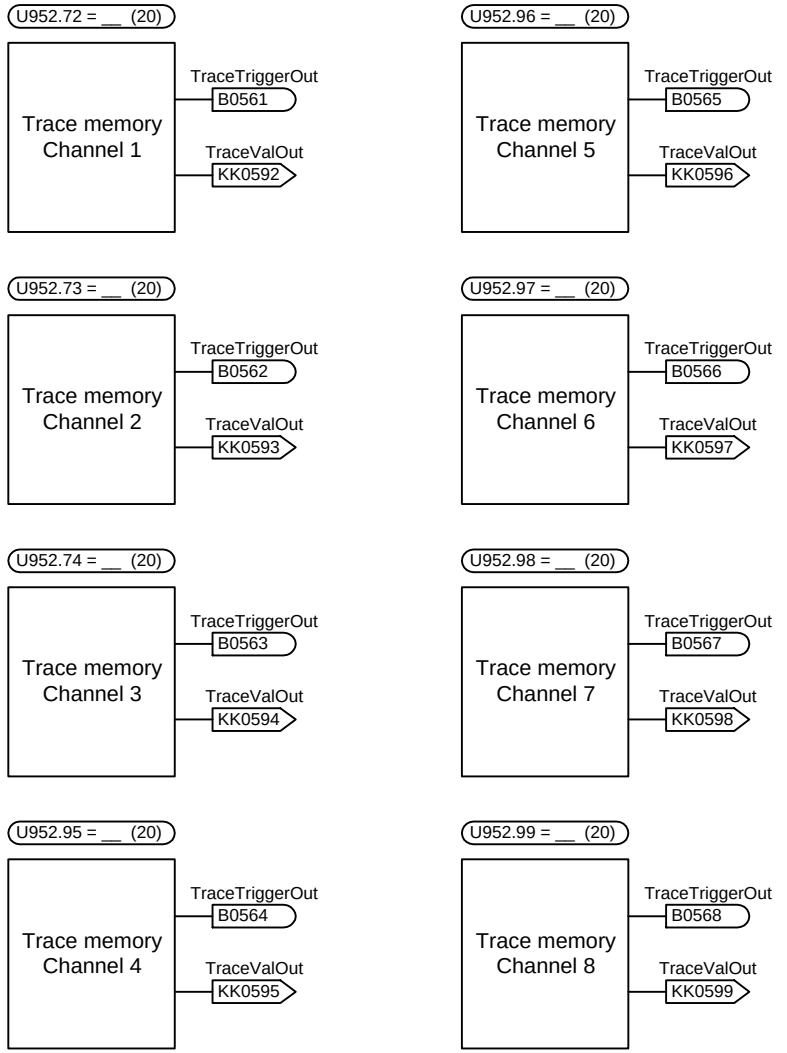

n959.76 = 6

5 Connector-to-parameter/ parameter-to-connector converters

Block is not calculated in T6!
Time of processing of block is not defined!

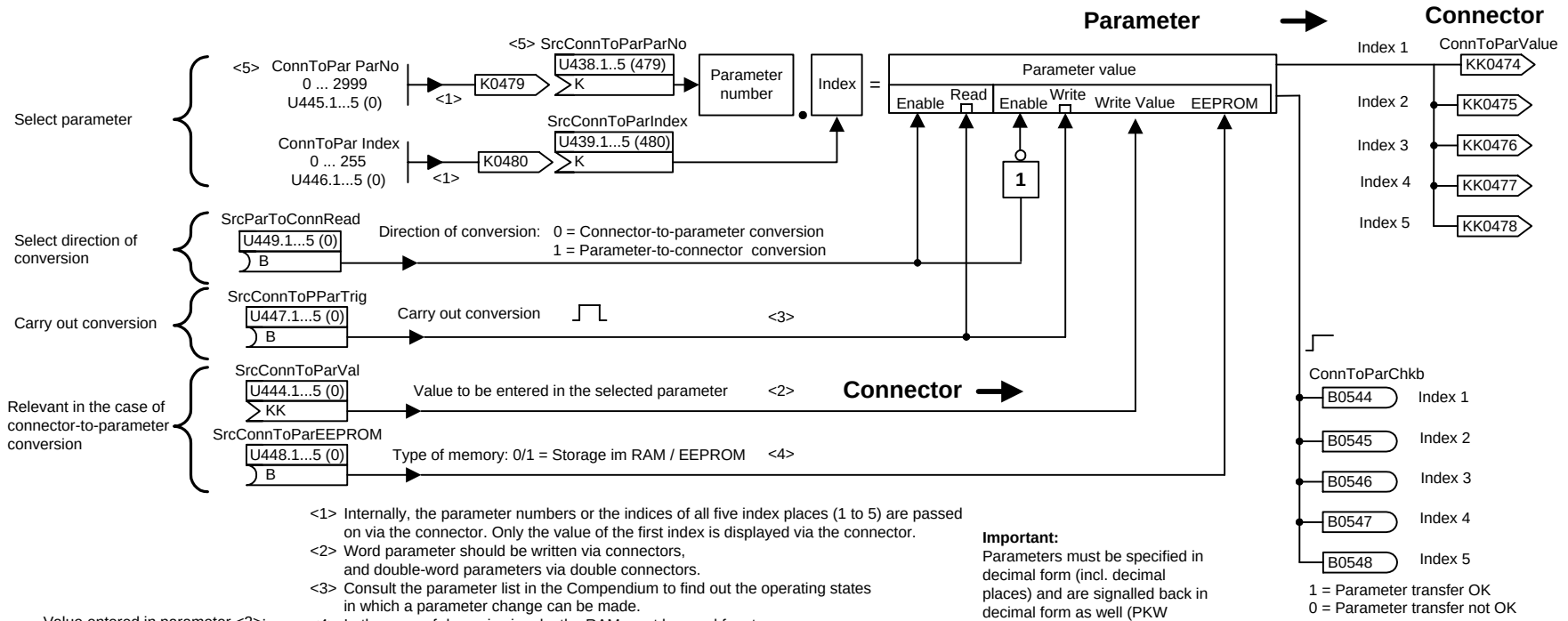

1 = Parameter transfer OK
0 = Parameter transfer not OK

<1> Internally, the parameter numbers or the indices of all five index places (1 to 5) are passed on via the connector. Only the value of the first index is displayed via the connector.
<2> Word parameter should be written via connectors, and double-word parameters via double connectors.
<3> Consult the parameter list in the Compendium to find out the operating states in which a parameter change can be made.
<4> In the case of dynamic signals, the RAM must be used for storage (a parameter can only be written 100 000 times in the EPROM)
<5> U and n parameters are addressed with Uxxx = 2xxx and nxxx=2xxx .

Important:
Parameters must be specified in decimal form (incl. decimal places) and are signalled back in decimal form as well (PKW normalization).

Value entered in parameter <2>:

Double connector
KKxxxx
K | K

Double-word parameter:
HW | LW

Word parameter
HW

Connector
Kxxxx
K | 0

Double-word parameter:
HW | 0

Word parameter:
HW

1 Example of connector-to-parameter conversion:
The value of connector K0409 should be fed to parameter U279.02. Alteration in the RAM ==>
- U445.1=2279 (parameter number)
- U446.1=2 (index)
- U449.1=0 (connector-parameter conversion)
- U447.1=1 (permanent transfer)
- U444.1=409 (source connector)
- U448.1=0 (write into the RAM)

2 Another example of connector-to-parameter conversion:
The parameter "Source position actual-value" P194 is to be set to 125 (corresponds to position actual-value of ext. encoder) ==>
- U445.1 = 194
- U446.1 = 1
- U449.1 = 0
- U447.1 = 1
- U444.1=409 (source connector)
- U448.1=0 (write into the RAM)

For this purpose, set U009 = 293 (= 125 Hex, as source connector) !

Please note that the values of "source" parameters are always hexadecimal values. Thus in U009 the converted decimal value has to be provided.

3 Example of parameter-to-connector conversion:
Parameter P103 is to be connected to connector KK0477 ==>
- U444.4 = 477
- U445.4=103 (parameter number)
- U446.4=0 (non-indexed parameter)
- U449.4=1 (parameter-connector conversion)
- U447.4=1 (permanent output)

MASTERDRIVES MC function diagram - List of contents of the supplementary boards

Contents	Sheet
Supplementary boards: List of contents	Y00
Supplementary boards	
- EB1 No.1	
Analog inputs, combined digital inputs	Y01
Analog outputs	Y02
Digital inputs/outputs	Y03
- EB1 No.2	
Analog inputs, combined digital inputs	Y04
Analog outputs	Y05
Digital inputs/outputs	Y06
- EB2 No.1	
Analog and digital inputs/outputs	Y07
- EB2 No.2	
Analog and digital inputs/outputs	Y08

Contents	Sheet
SCB expansions	
- SCB1/2	
Peer-to-peer receiving	Z01
Peer-to-peer transmitting	Z02
- SCB2	
USS receiving	Z05
USS transmitting	Z06
- SCB1 with SCI1	
Digital inputs slave 1	Z10
Digital inputs slave 2	Z11
Digital outputs slave 1	Z15
Digital outputs slave 2	Z16
Analog inputs slave 1	Z20
Analog inputs slave 2	Z21
Analog outputs slave 1	Z25
Analog outputs slave 2	Z26
- SCB1 with SCI2	
Digital inputs slave 1	Z30
Digital inputs slave 2	Z31
Digital outputs slave 1	Z35
Digital outputs slave 2	Z36

Contents	Sheet

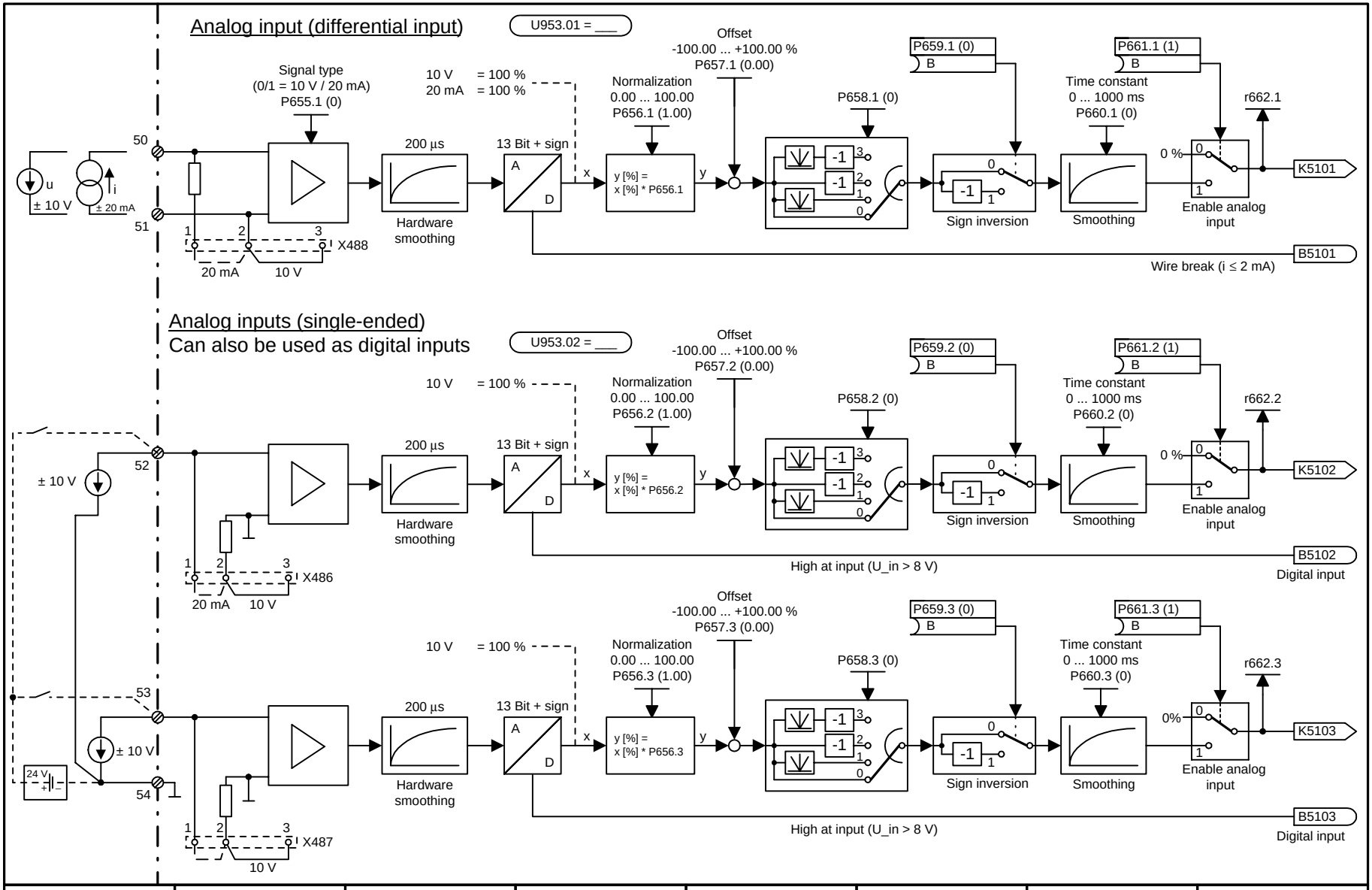

1	2	3	4	5	6	7	8
Terminal expansion EB1 No. 1				V1.6	fp_mc_Y01_e.vsd	Function diagram	**- Y01 -**
Analog inputs, combined digital inputs					08.01.02	MASTERDRIVES MC	

Analog outputs

U953.03 = ___

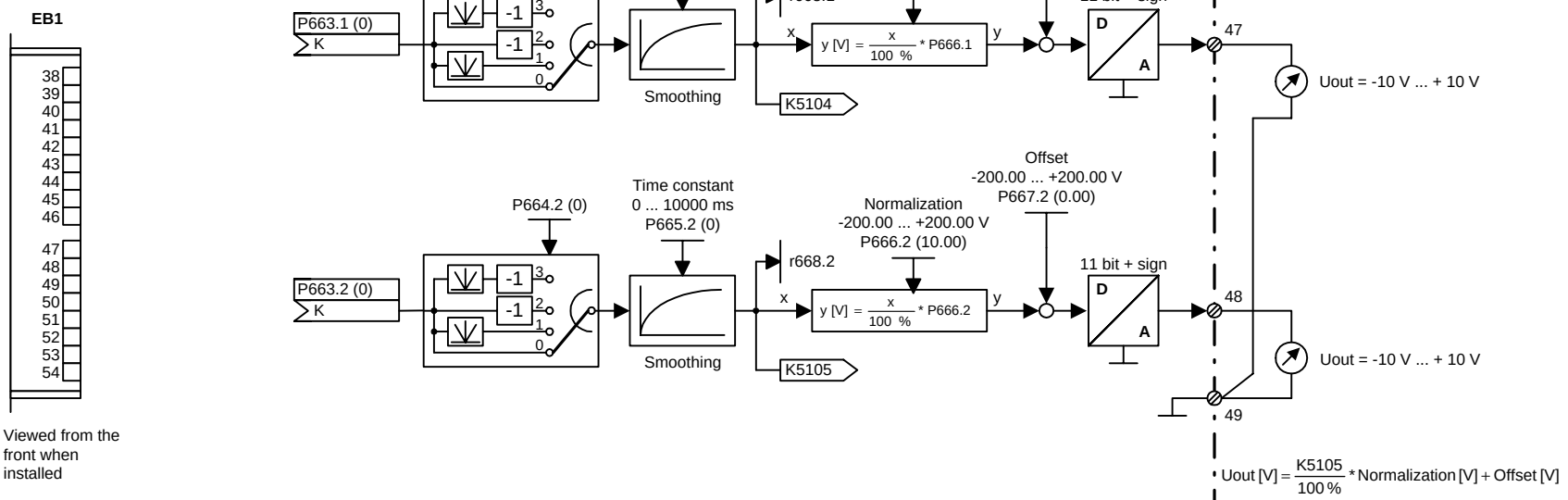

1	2	3	4	5	6	7	8
Terminal expansion EB1 No. 1				V1.6	fp_mc_Y02_e.vsd	Function diagram	- Y02 -
Analog outputs					08.01.02	MASTERDRIVES MC	

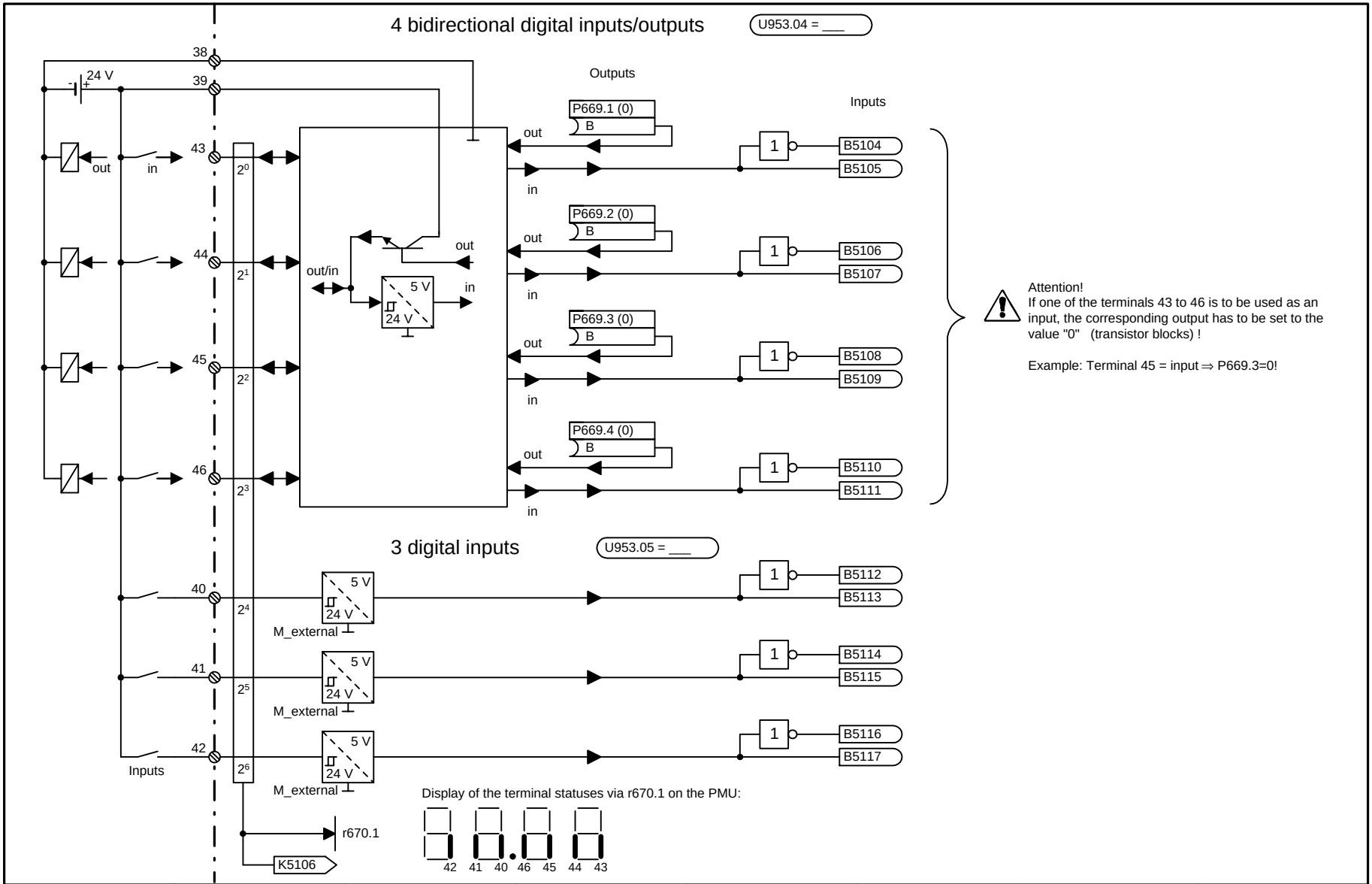

1	2	3	4	5	6	7	8
Terminal expansion EB1 No. 1				V1.6	fp_mc_Y03_e.vsd	Function diagram	- Y03 -
Digital inputs/outputs					08.01.02	MASTERDRIVES MC	

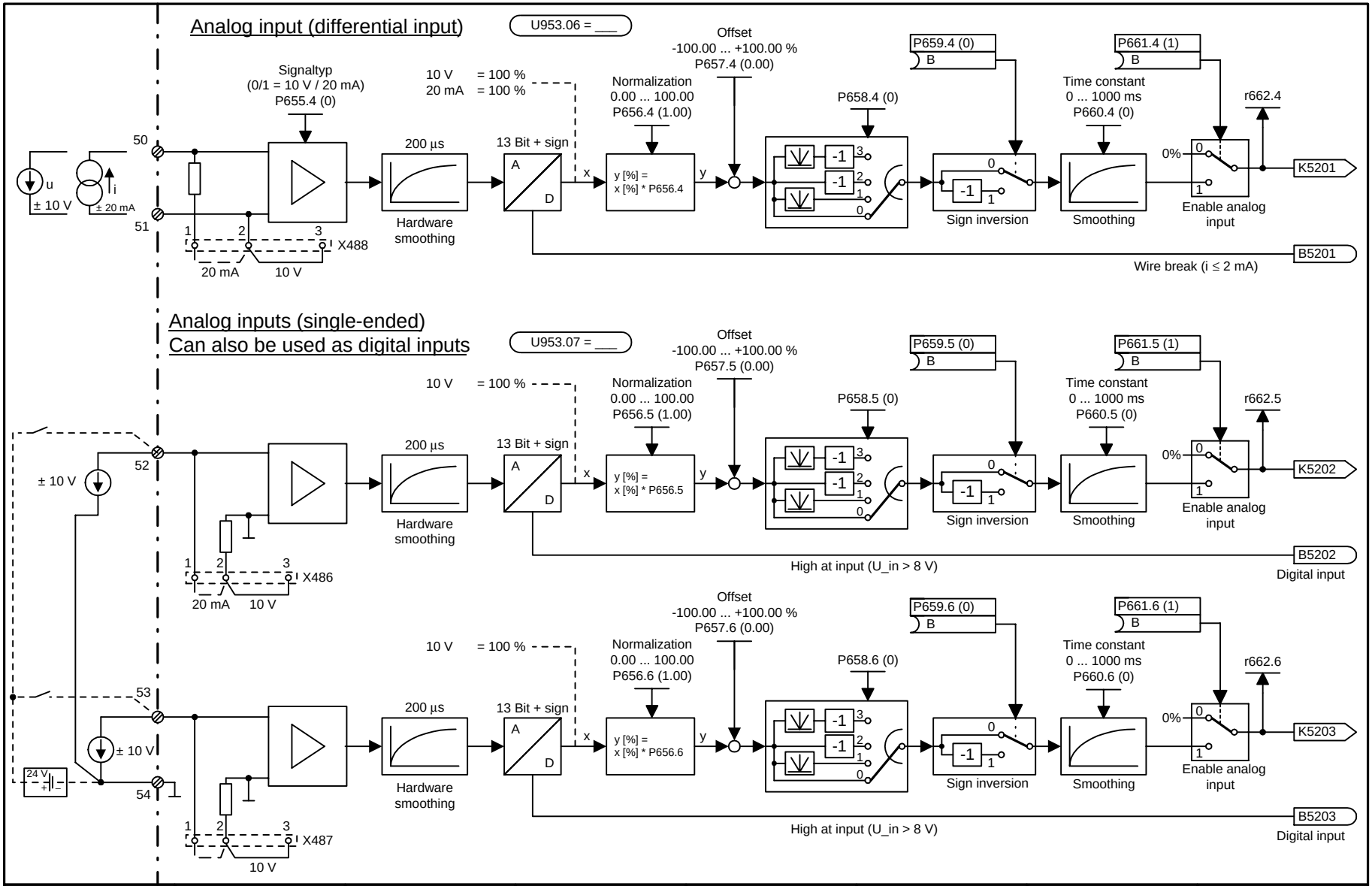

1	2	3	4	5	6	7	8
Terminal expansion EB1 No. 2				V1.6	fp_mc_Y04_e.vsd	Function diagram	- Y04 -
Analog inputs, combined digital inputs					08.01.02	MASTERDRIVES MC	

Analog outputs

U953.08 = ___

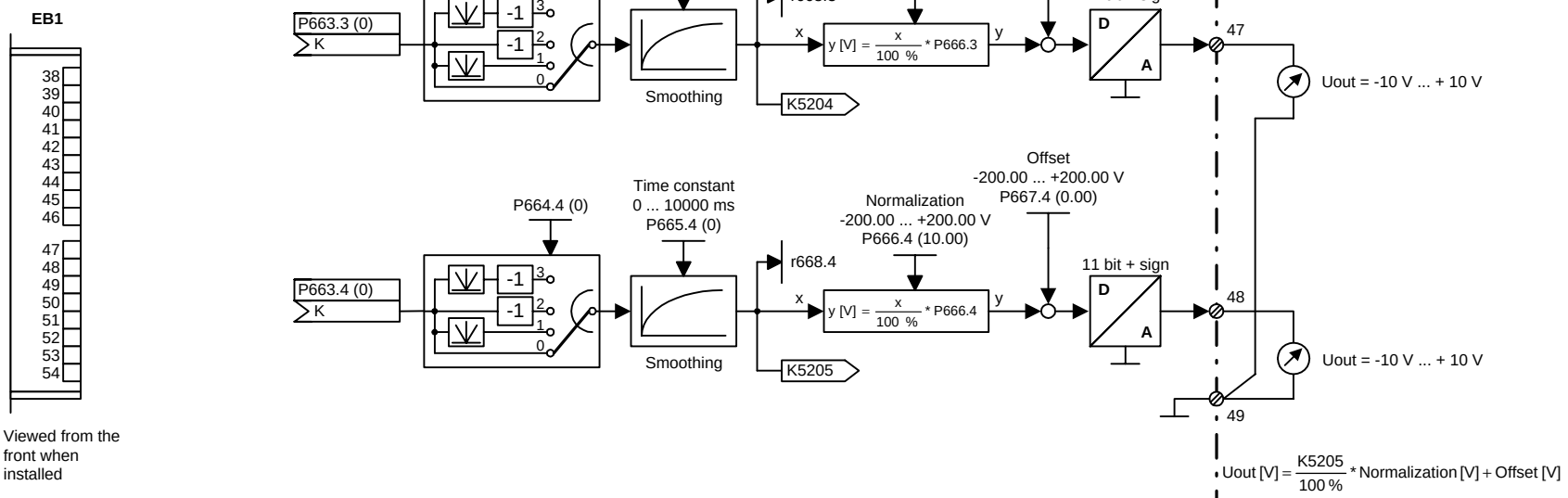

1	2	3	4	5	6	7	8
Terminal expansion EB1 No. 2				V1.6	fp_mc_Y05_e.vsd	Function diagram	- Y05 -
Analog outputs					08.01.02	MASTERDRIVES MC	

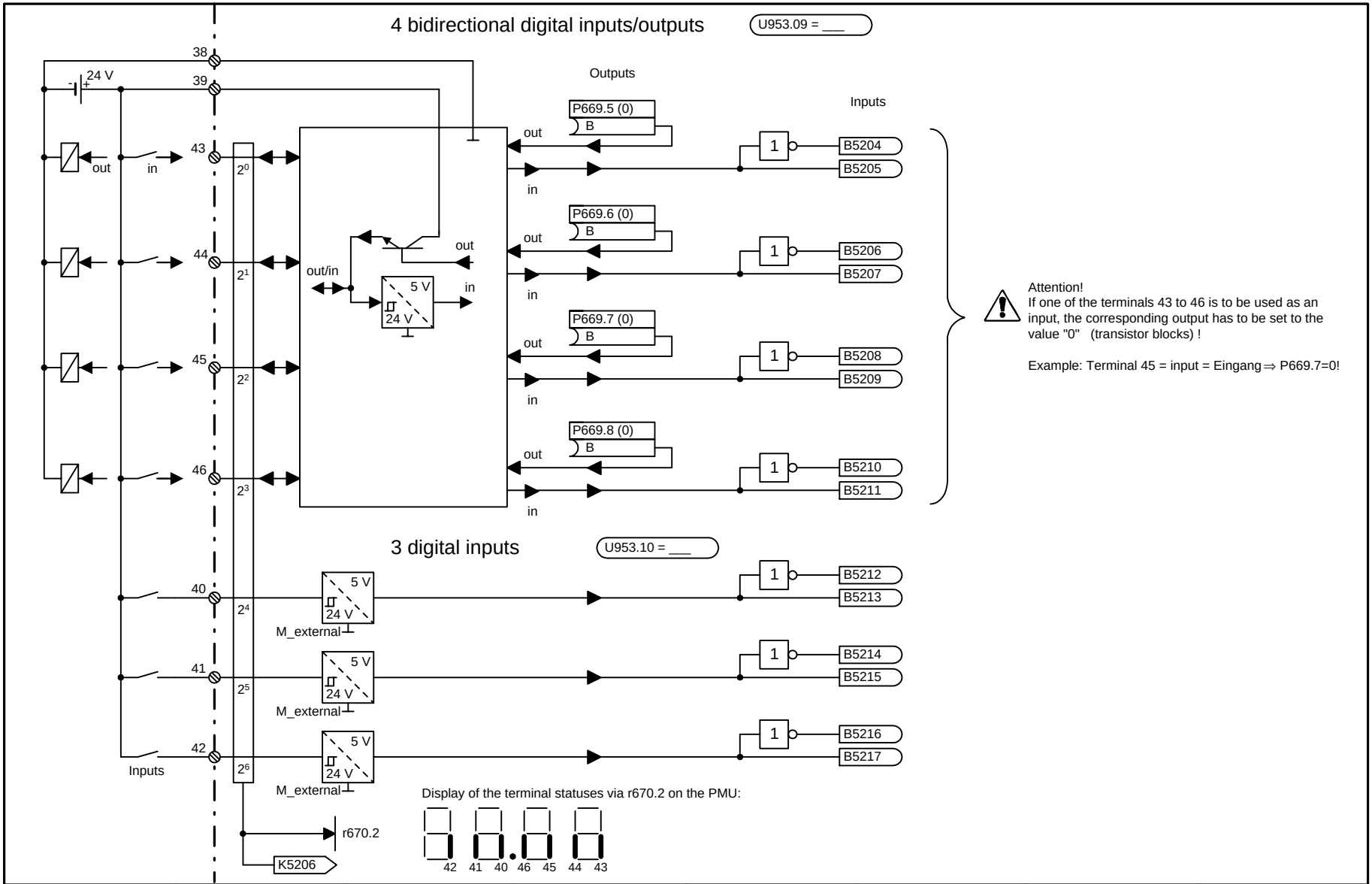

1	2	3	4	5	6	7	8
Terminal expansion EB1 No. 2				V1.6	fp_mc_Y06_e.vsd	Function diagram	- Y06 -
Digital inputs/outputs					08.01.02	MASTERDRIVES MC	

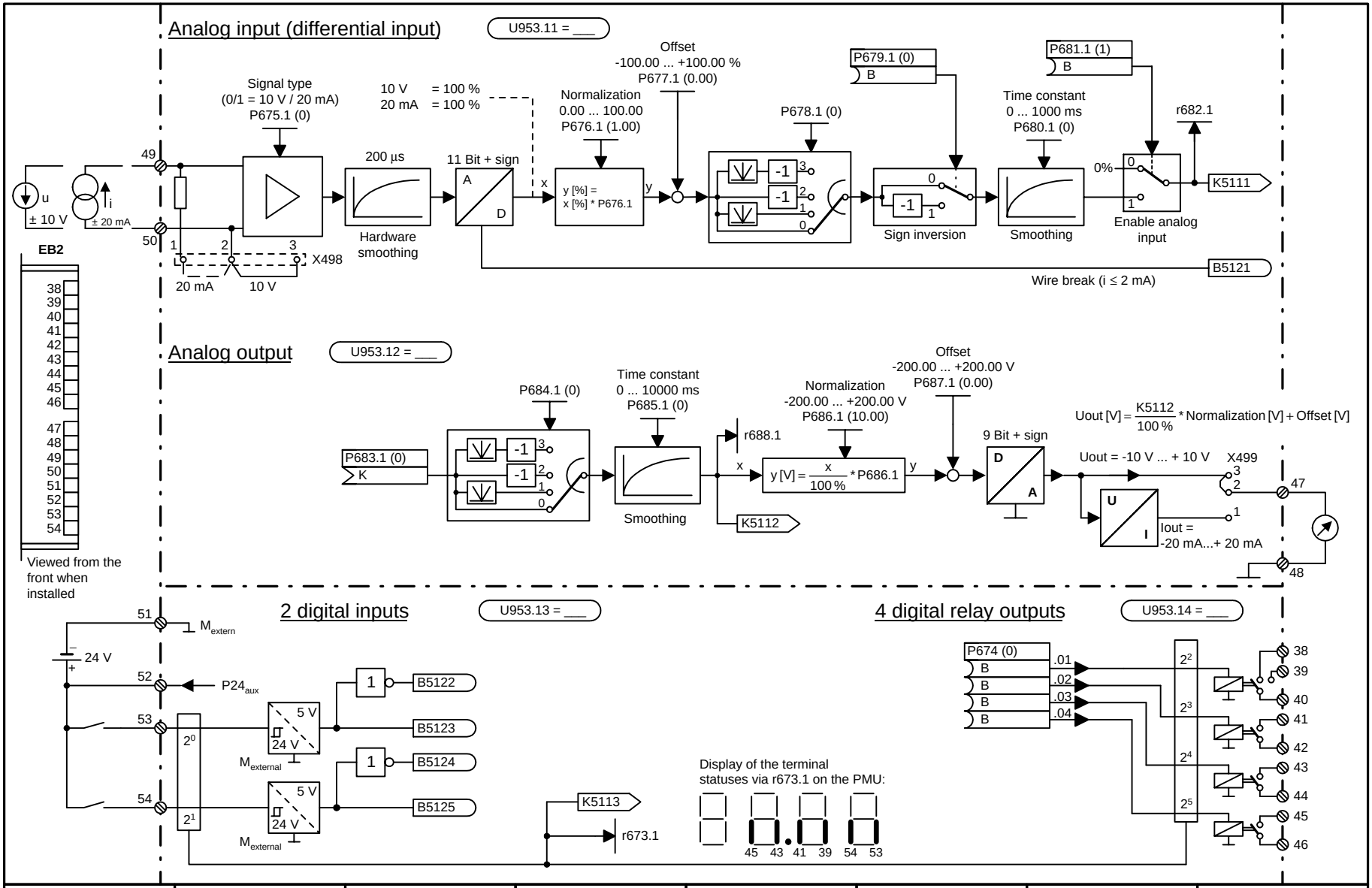

1	2	3	4	5	6	7	8
Terminal expansion EB2 No. 1				V1.6	fp_mc_Y07_e.vsd	Function diagram	- Y07 -
analog and digital inputs/outputs					08.01.02	MASTERDRIVES MC	

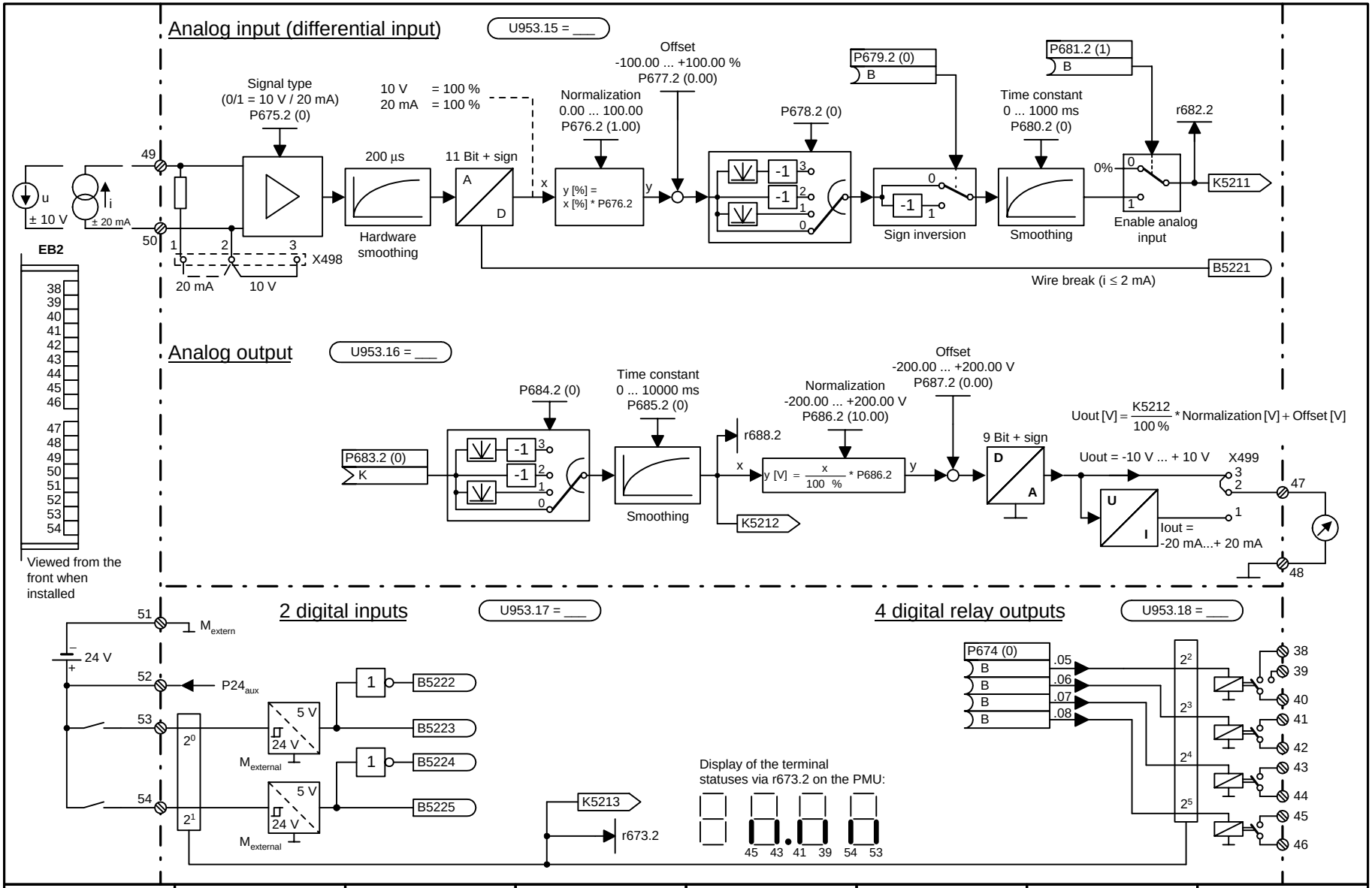

1	2	3	4	5	6	7	8
Terminal expansion EB2 No. 2				V1.6	fp_mc_Y08_e.vsd	Function diagram	- Y08 -
analog and digital inputs/outputs					08.01.02	MASTERDRIVES MC	

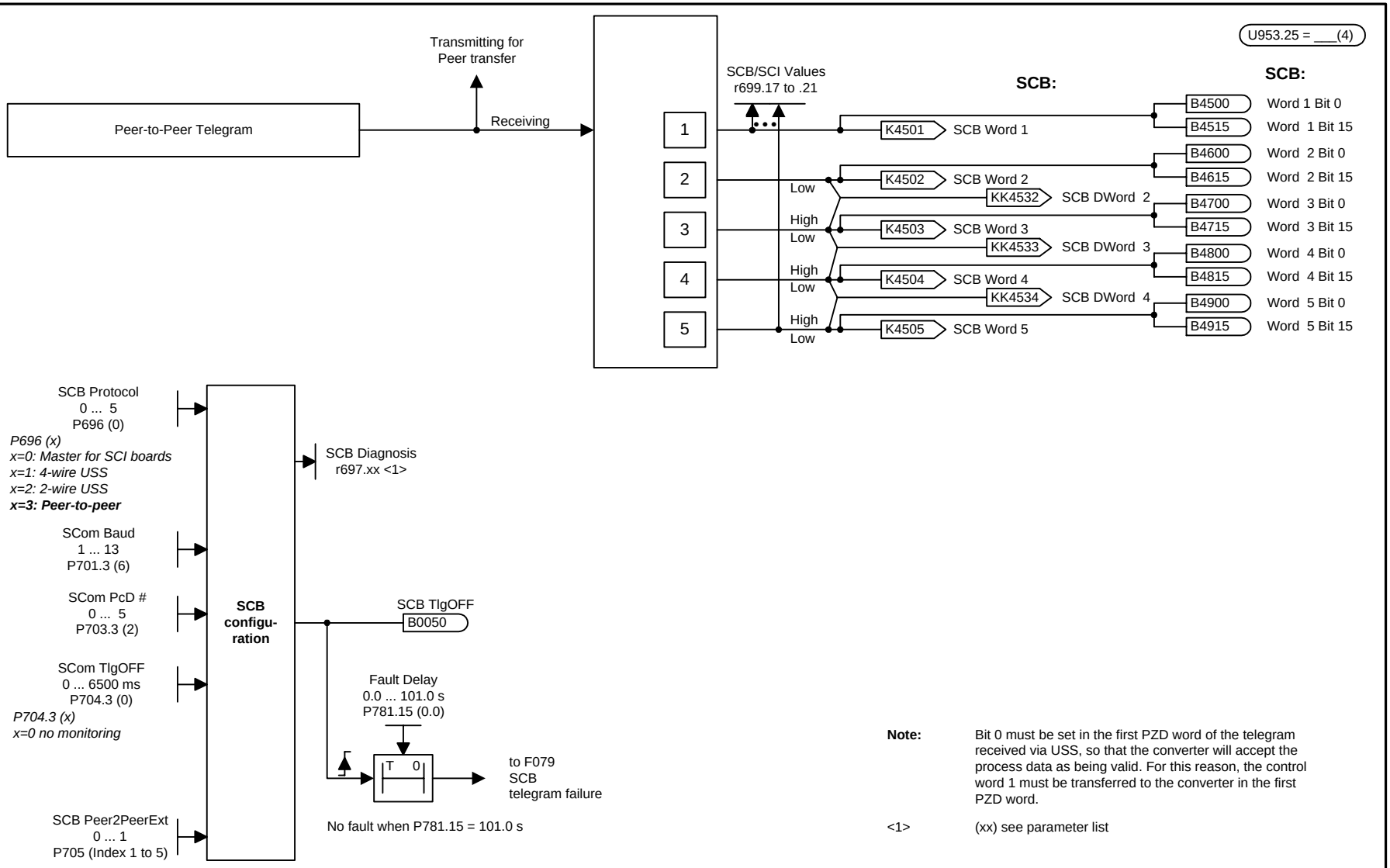

Note: Bit 0 must be set in the first PZD word of the telegram received via USS, so that the converter will accept the process data as being valid. For this reason, the control word 1 must be transferred to the converter in the first PZD word.

<1> (xx) see parameter list

1	2	3	4	5	6	7	8
SCB1/2				V1.6	fp_mc_Z01_e.vsd	Function diagram	- Z01 -
Peer-to-peer receiving				Not with Compact PLUS!	08.01.02	MASTERDRIVES MC	

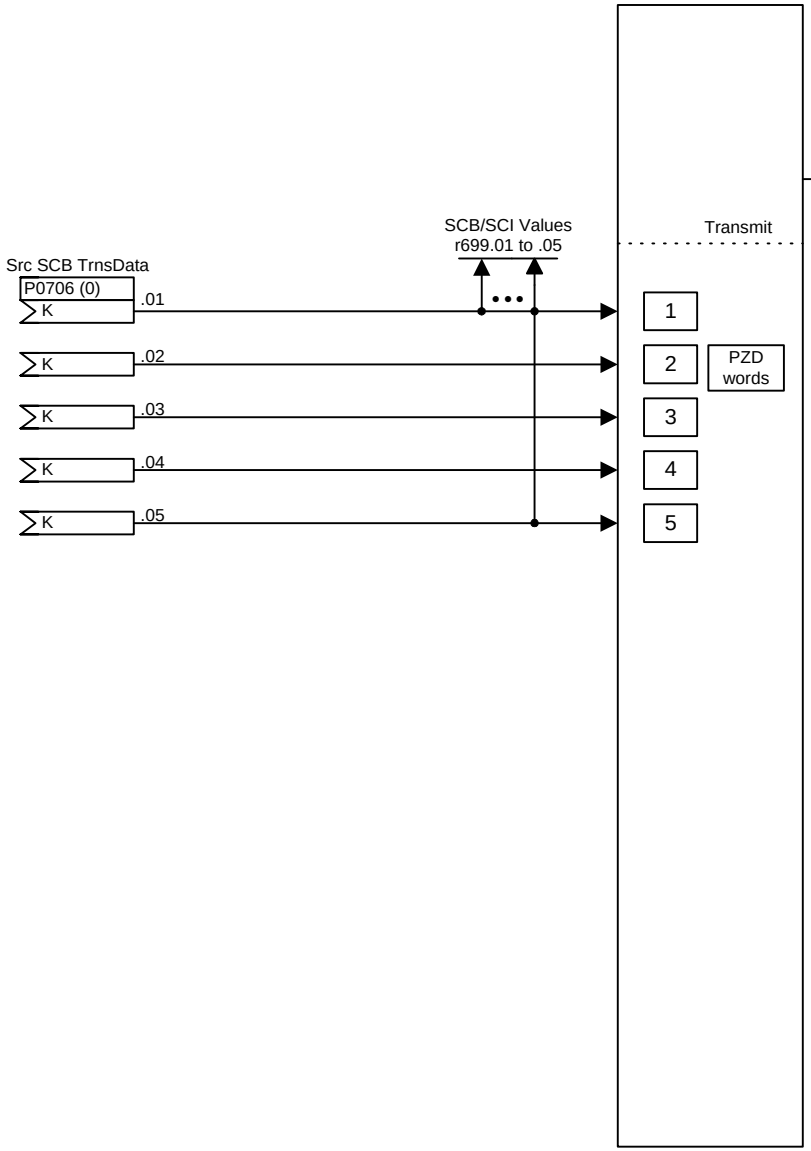

Transmitting 32-bit words:
If the same double-word connector is connected up to two successive connector indices, this is transferred as a 32 bit word.

Examples:

1.

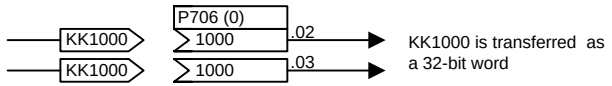

KK1000 is transferred as a 32-bit word

2.

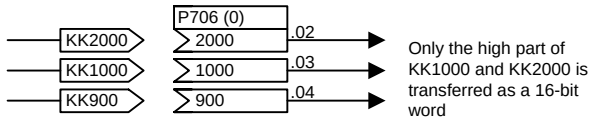

Only the high part of KK1000 and KK2000 is transferred as a 16-bit word

1	2	3	4	5	6	7	8
SCB1/2				V1.6	fp_mc_Z02_e.vsd	Function diagram	- Z02 -
Peer-to-peer transmitting			Not with Compact PLUS!		08.01.02	MASTERDRIVES MC	

Note: Bit 10 must be set in the first PZD word of the telegram received via USS so that the converter will accept the process data as being valid. For this reason, the control word 1 must be transferred to the converter in the first PZD word.

<1> (xx) see parameter list

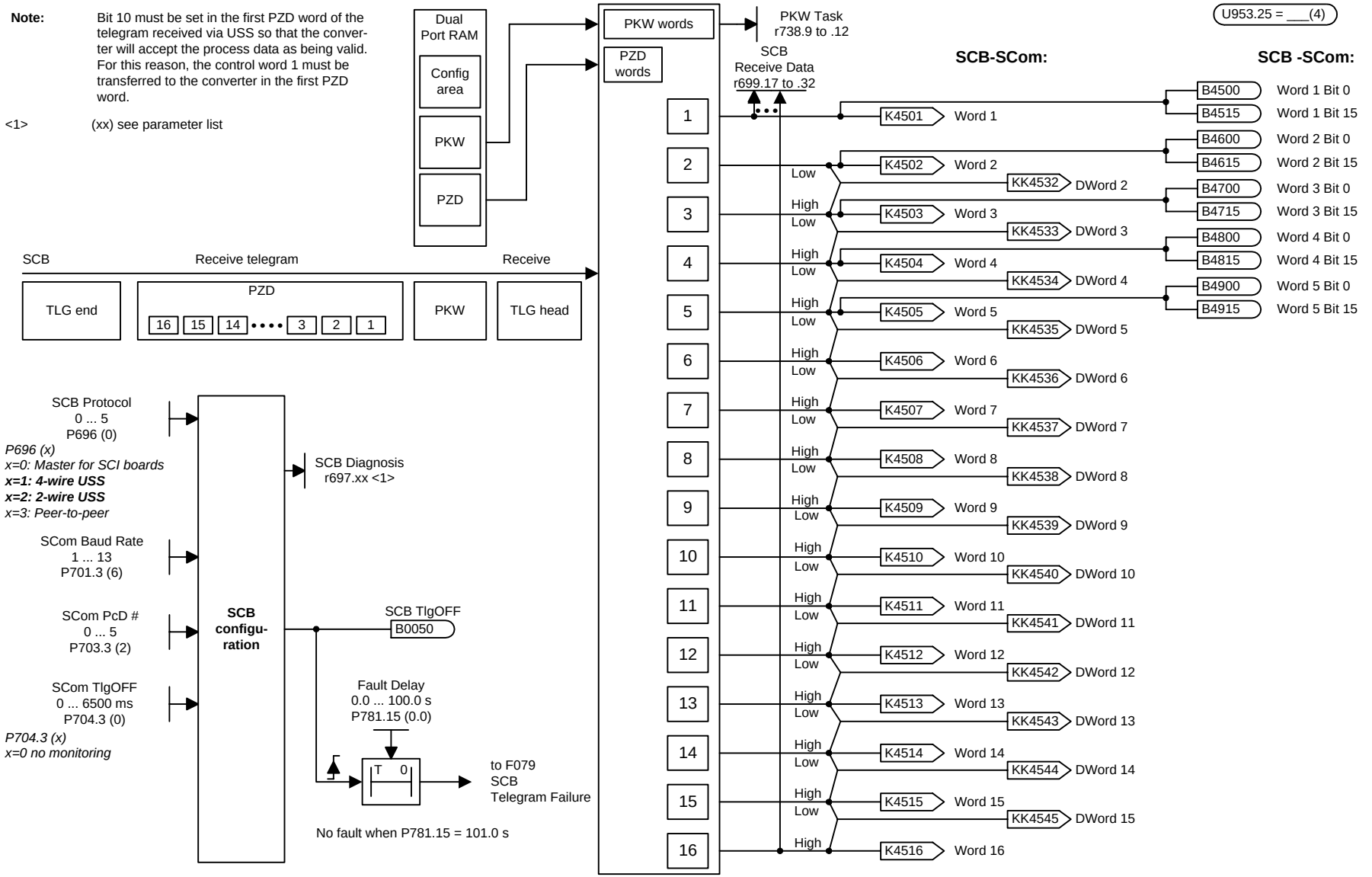

1	2	3	4	5	6	7	8
SCB2				V1.6	fp_mc_Z05_e.vsd	Function diagram	- Z05 -
USS receiving				Not with Compact PLUS!	08.01.02	MASTERDRIVES MC	

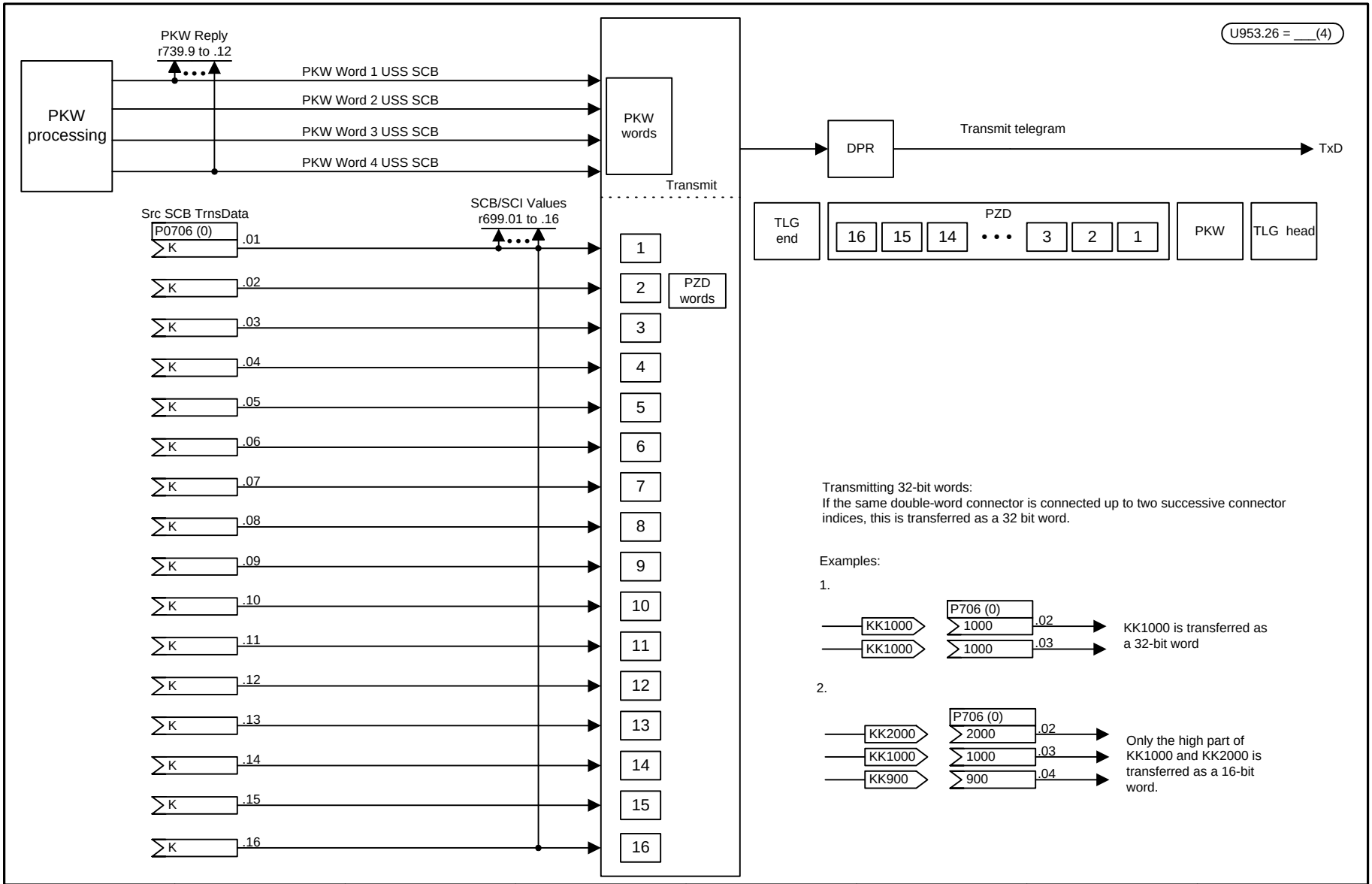

1	2	3	4	5	6	7	8
SCB2				V1.6	fp_mc_Z06_e.vsd	Function diagram	- Z06 -
USS transmitting				Not with Compact PLUS!	08.01.02	MASTERDRIVES MC	

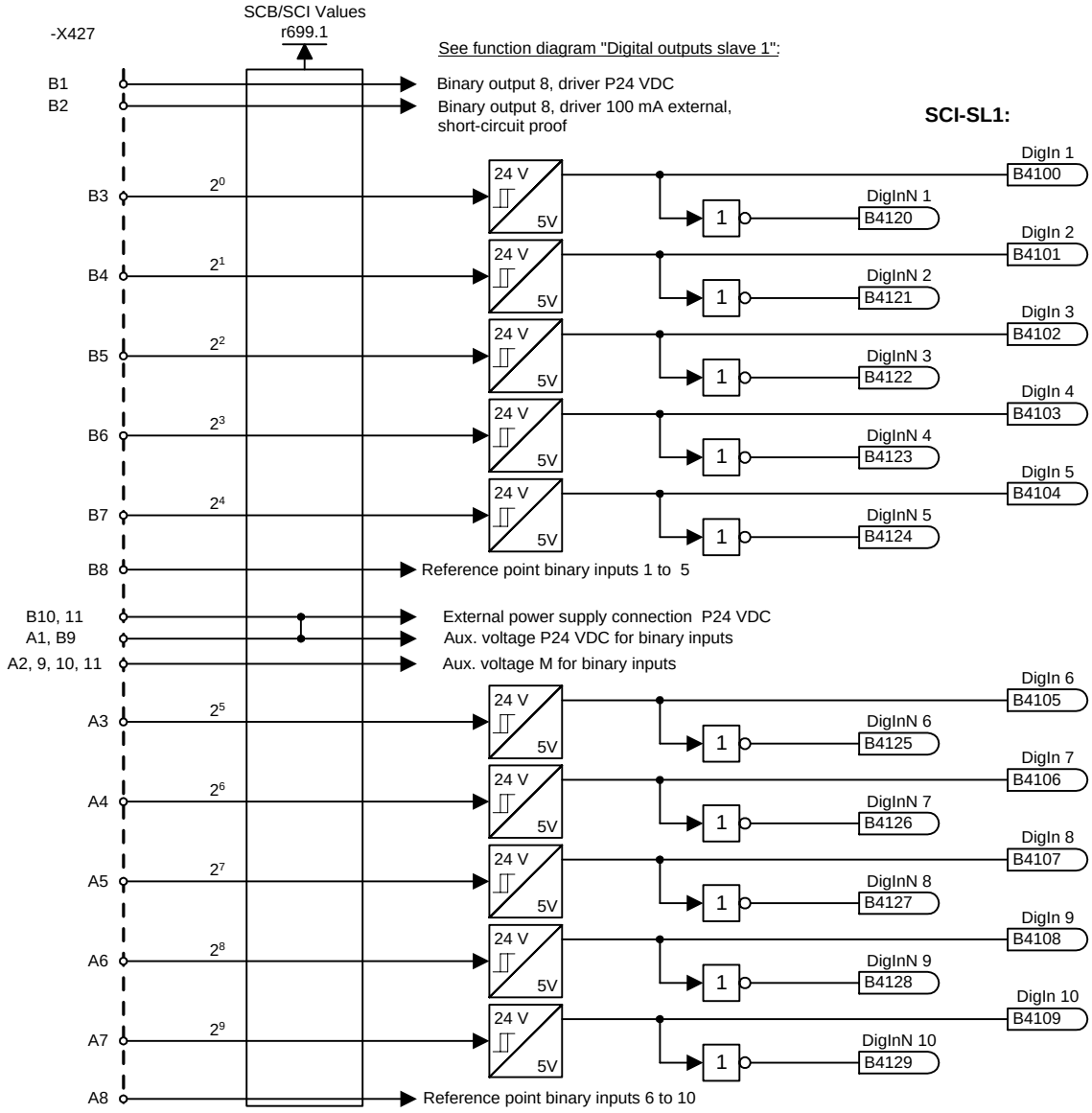

1	2	3	4	5	6	7	8
SCB1 with SCI1				V1.6	fp_mc_Z10_e.vsd	Function diagram	- Z10 -
Digital inputs slave 1				Not with Compact PLUS!	08.01.02	MASTERDRIVES MC	

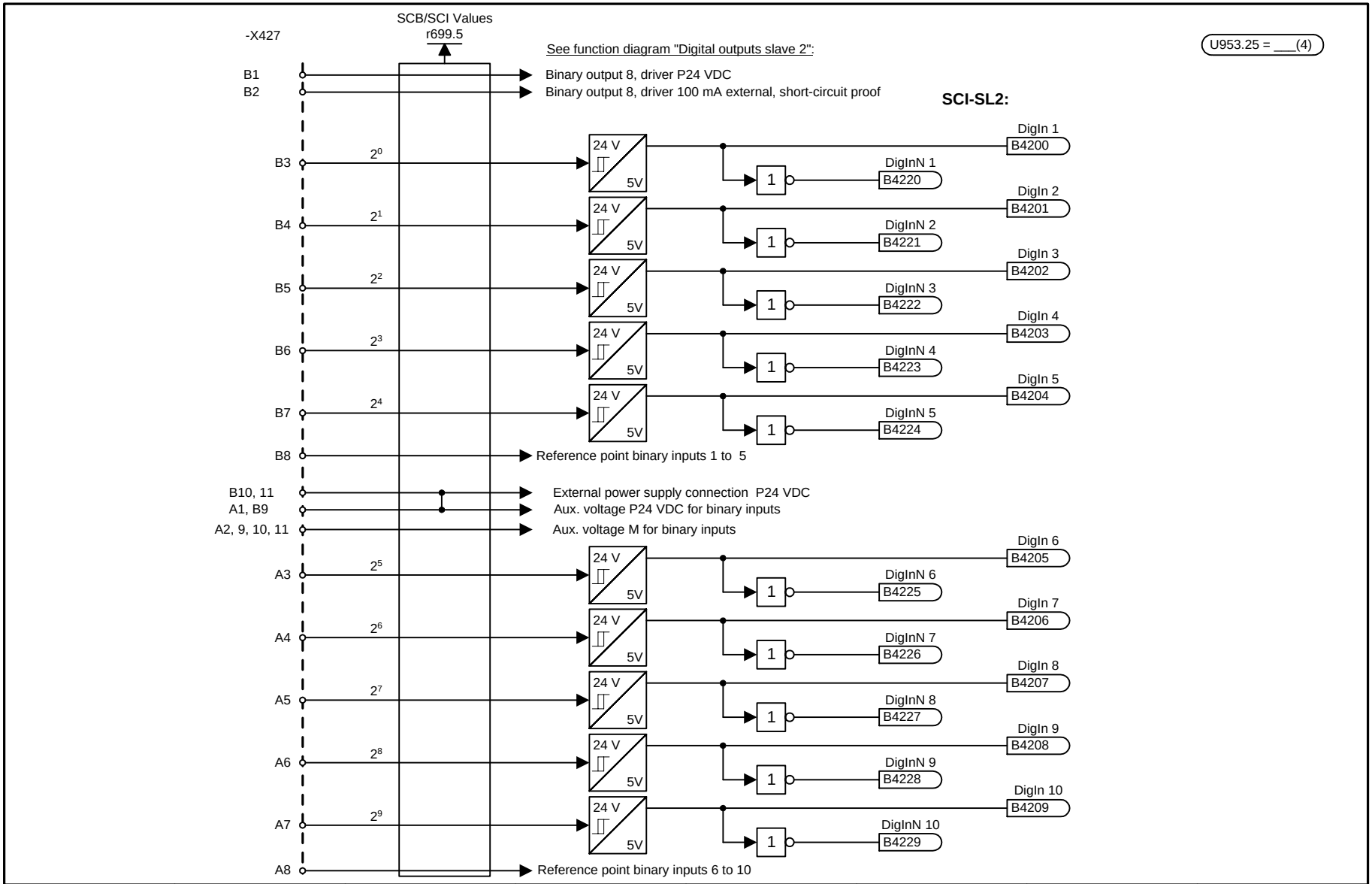

1	2	3	4	5	6	7	8
SCB1 with SCI1				V1.6	fp_mc_Z11_e.vsd	Function diagram	- Z11 -
Digital inputs slave 2				Not with Compact PLUS!	08.01.02	MASTERDRIVES MC	

U953.26 = ___(4)

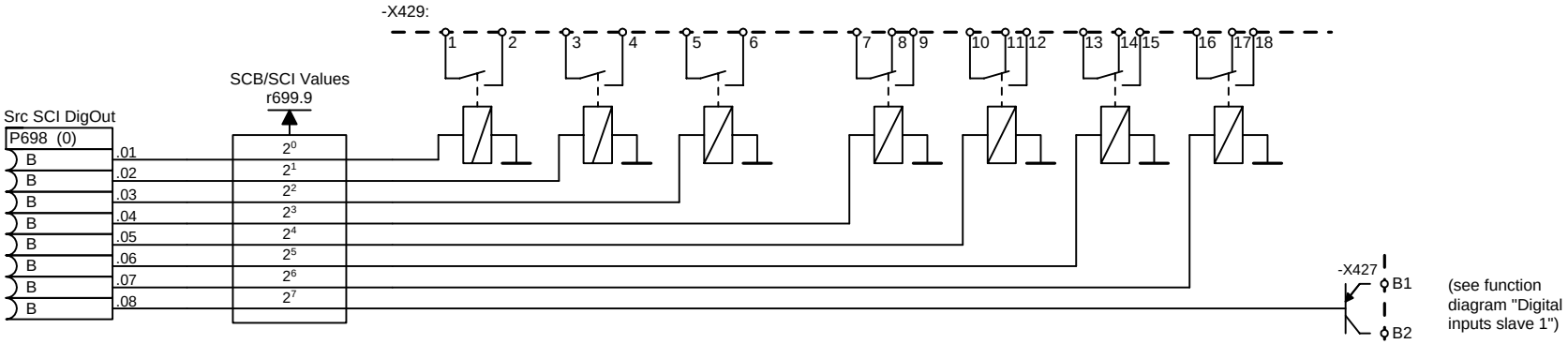

1	2	3	4	5	6	7	8
SCB1 with SCI1				V1.6	fp_mc_Z15_e.vsd	Function diagram	- Z15 -
Digital outputs slave 1				Not with Compact PLUS!	08.01.02	MASTERDRIVES MC	

U953.26 = ___(4)

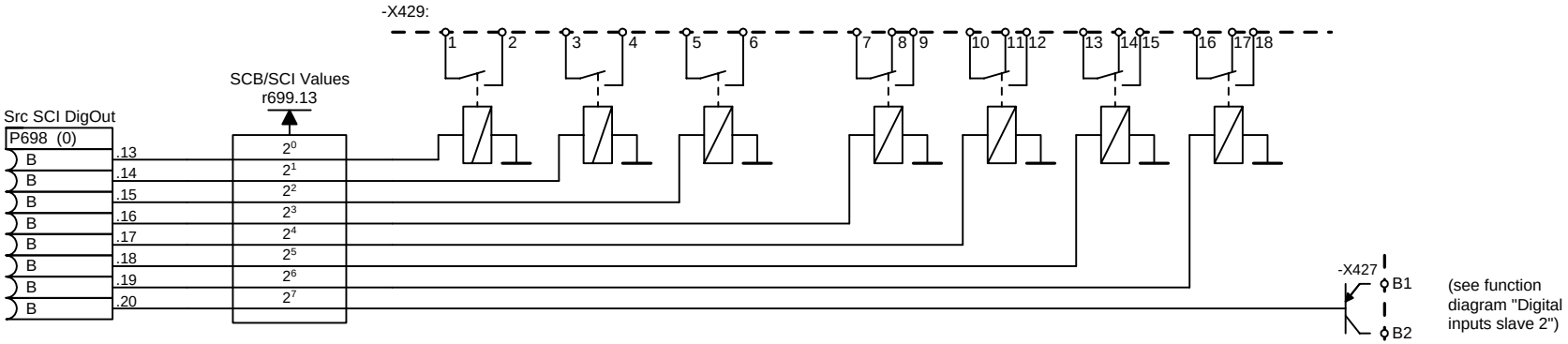

1	2	3	4	5	6	7	8
SCB1 with SCI1				V1.6	fp_mc_Z16_e.vsd	Function diagram	- Z16 -
Digital outputs slave 2				Not with Compact PLUS!	08.01.02	MASTERDRIVES MC	

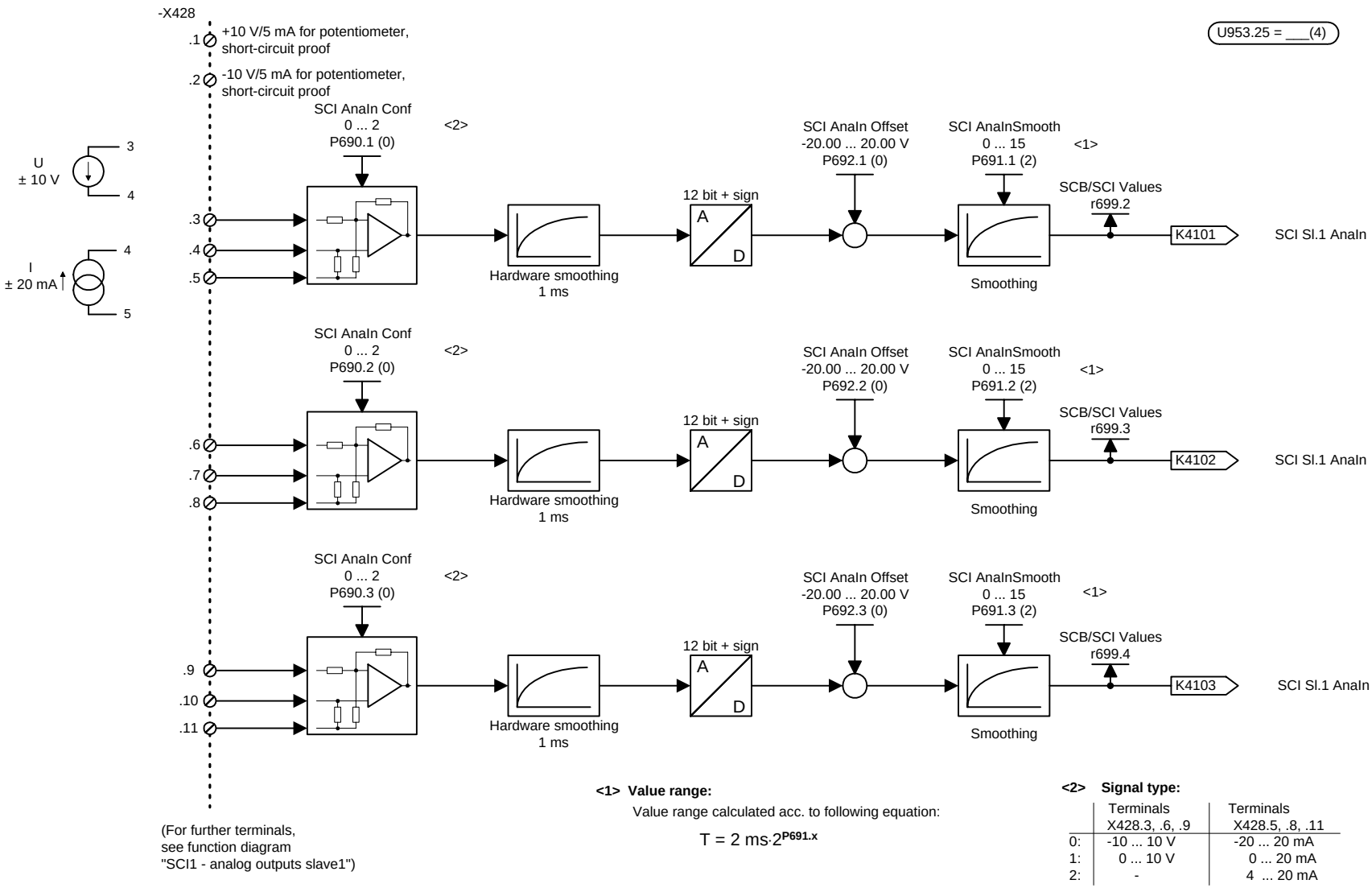

<1> Value range:

Value range calculated acc. to following equation:

$T = 2\ ms \cdot 2^{P691.x}$

<2> Signal type:

	Terminals X428.3, .6, .9	Terminals X428.5, .8, .11
0:	-10 ... 10 V	-20 ... 20 mA
1:	0 ... 10 V	0 ... 20 mA
2:	-	4 ... 20 mA

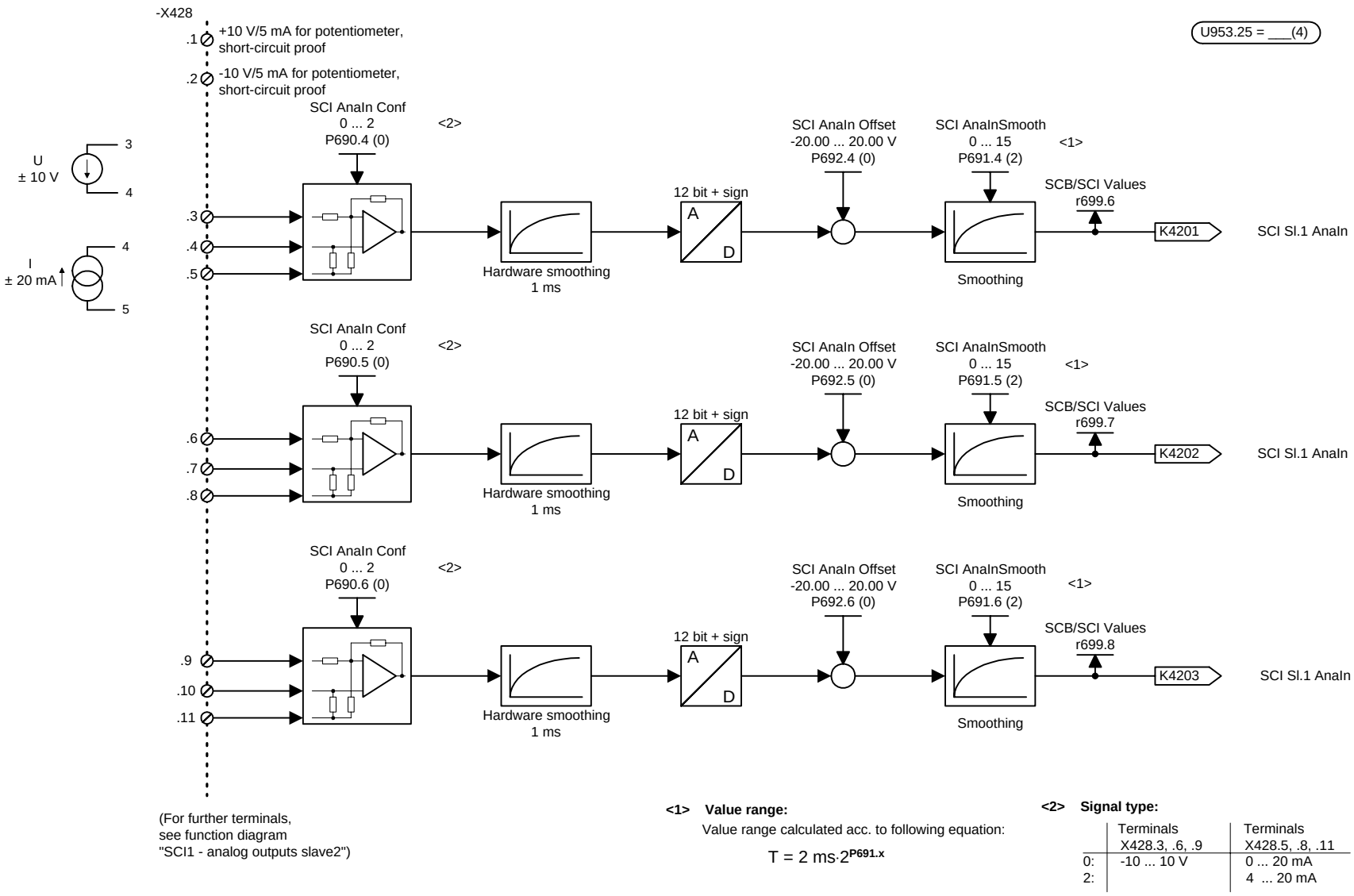

<1> Value range:

Value range calculated acc. to following equation:

$$T = 2\ ms \cdot 2^{P691.x}$$

<2> Signal type:

	Terminals X428.3, .6, .9	Terminals X428.5, .8, .11
0:	-10 ... 10 V	0 ... 20 mA
2:		4 ... 20 mA

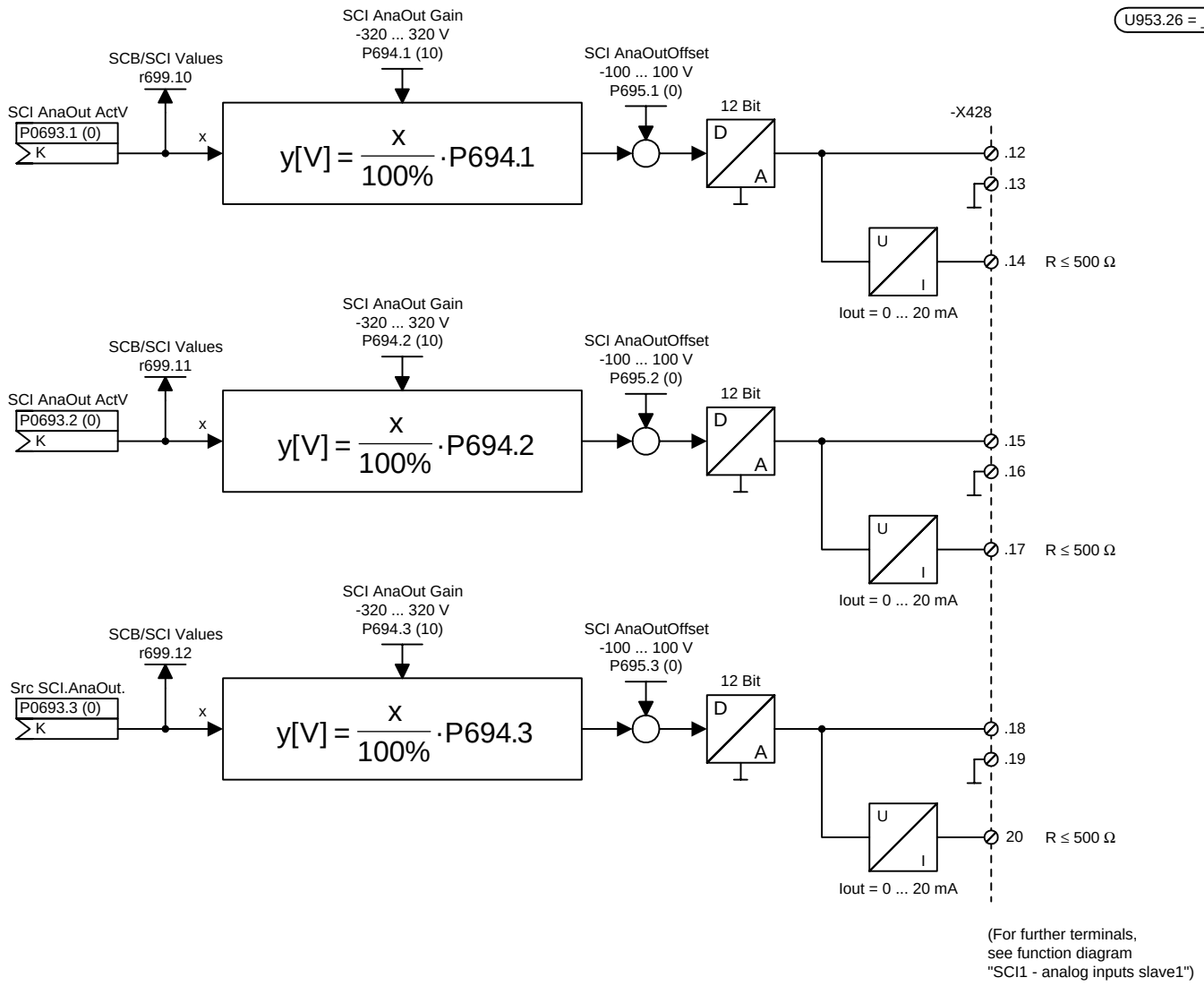

1	2	3	4	5	6	7	8
SCB1 with SCI1				V1.6	fp_mc_Z25_e.vsd	Function diagram	- Z25 -
SCI1 analog outputs slave 1				Not with Compact PLUS!	08.01.02	MASTERDRIVES MC	

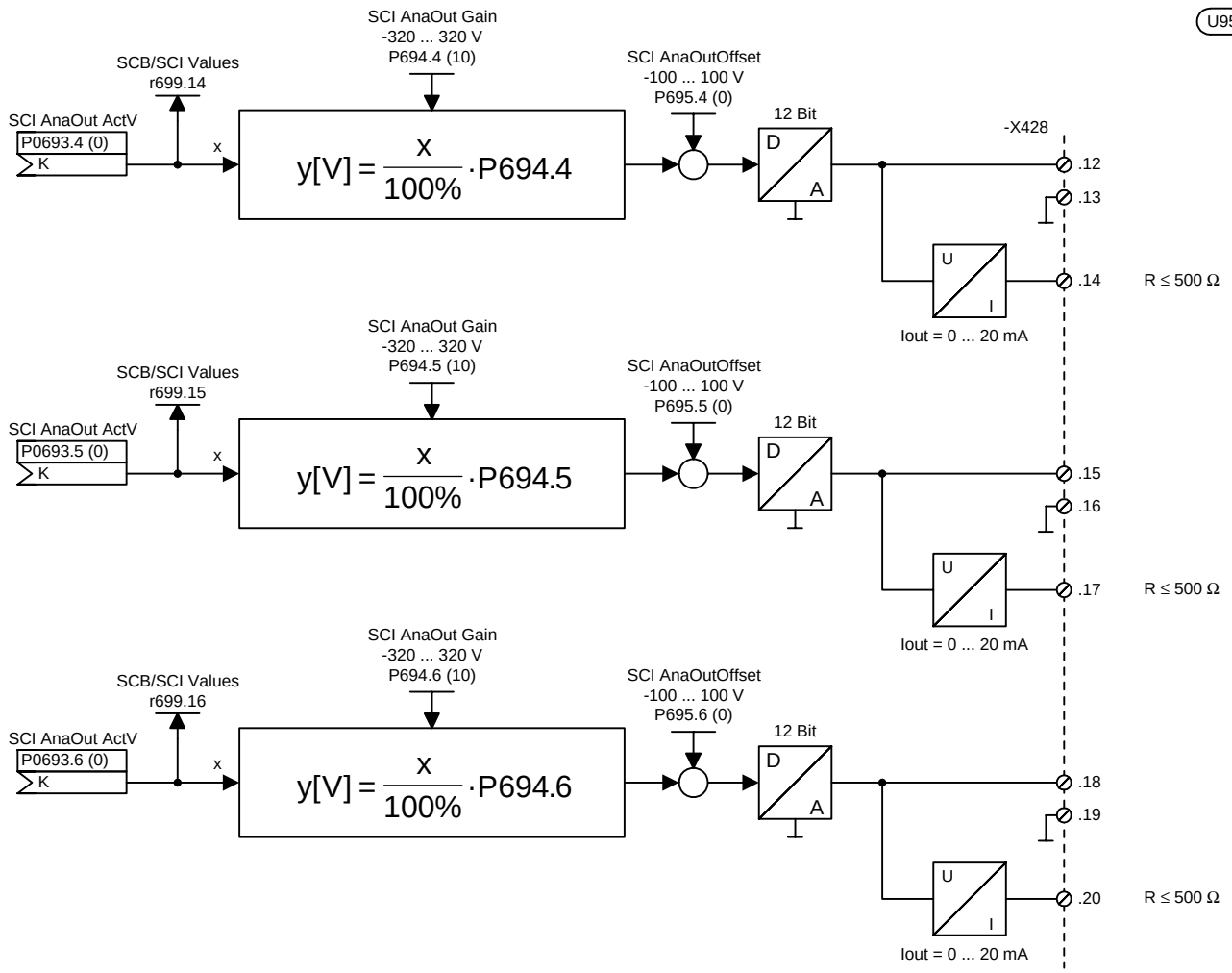

1	2	3	4	5	6	7	8
SCB1 with SCI1				V1.6	fp_mc_Z26_e.vsd	Function diagram	- Z26 -
SCI1 analog outputs slave 2			Not with Compact PLUS!		08.01.02	MASTERDRIVES MC	

U953.25 = ___(4)

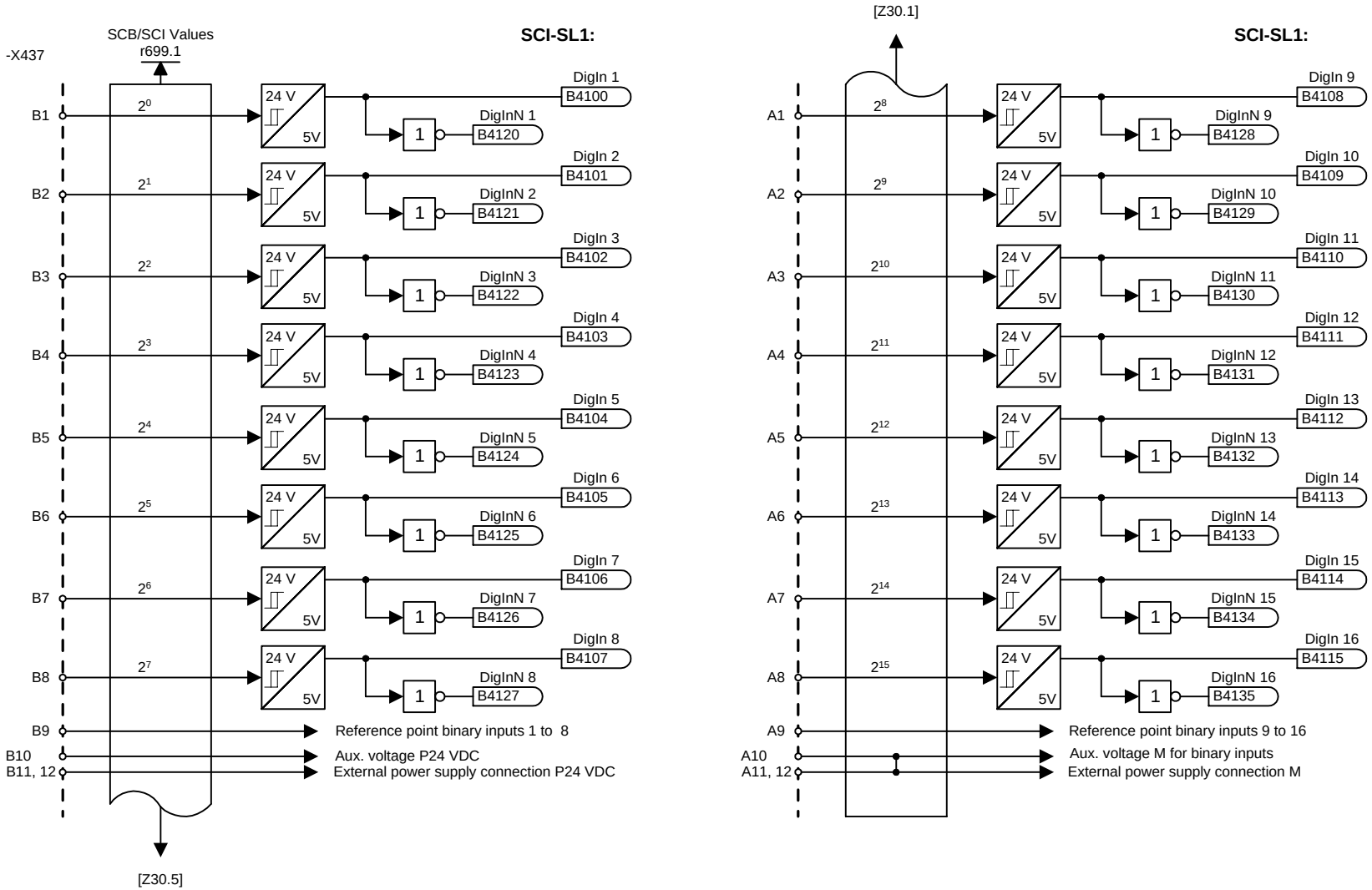

1	2	3	4	5	6	7	8
SCB1 with SCI2				V1.6	fp_mc_Z30_e.vsd	Function diagram	- Z30 -
Digital inputs slave 1				Not with Compact PLUS!	08.01.02	MASTERDRIVES MC	

U953.25 = ___(4)

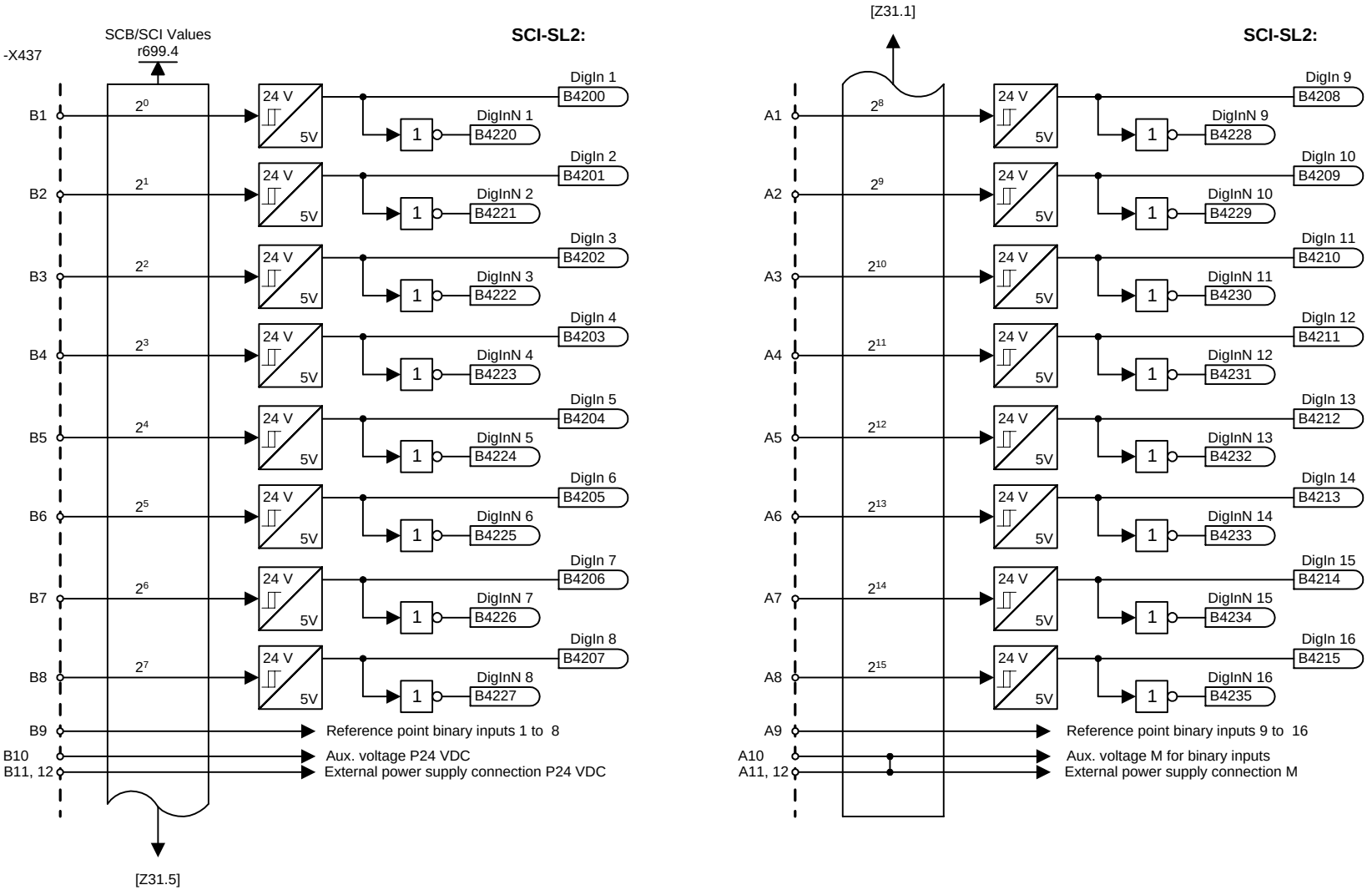

1	2	3	4	5	6	7	8
SCB1 with SCI2				V1.6	fp_mc_Z31_e.vsd	Function diagram	- Z31 -
Digital inputs slave 2				Not with Compact PLUS!	08.01.02	MASTERDRIVES MC	

U953.26 = ___(4)

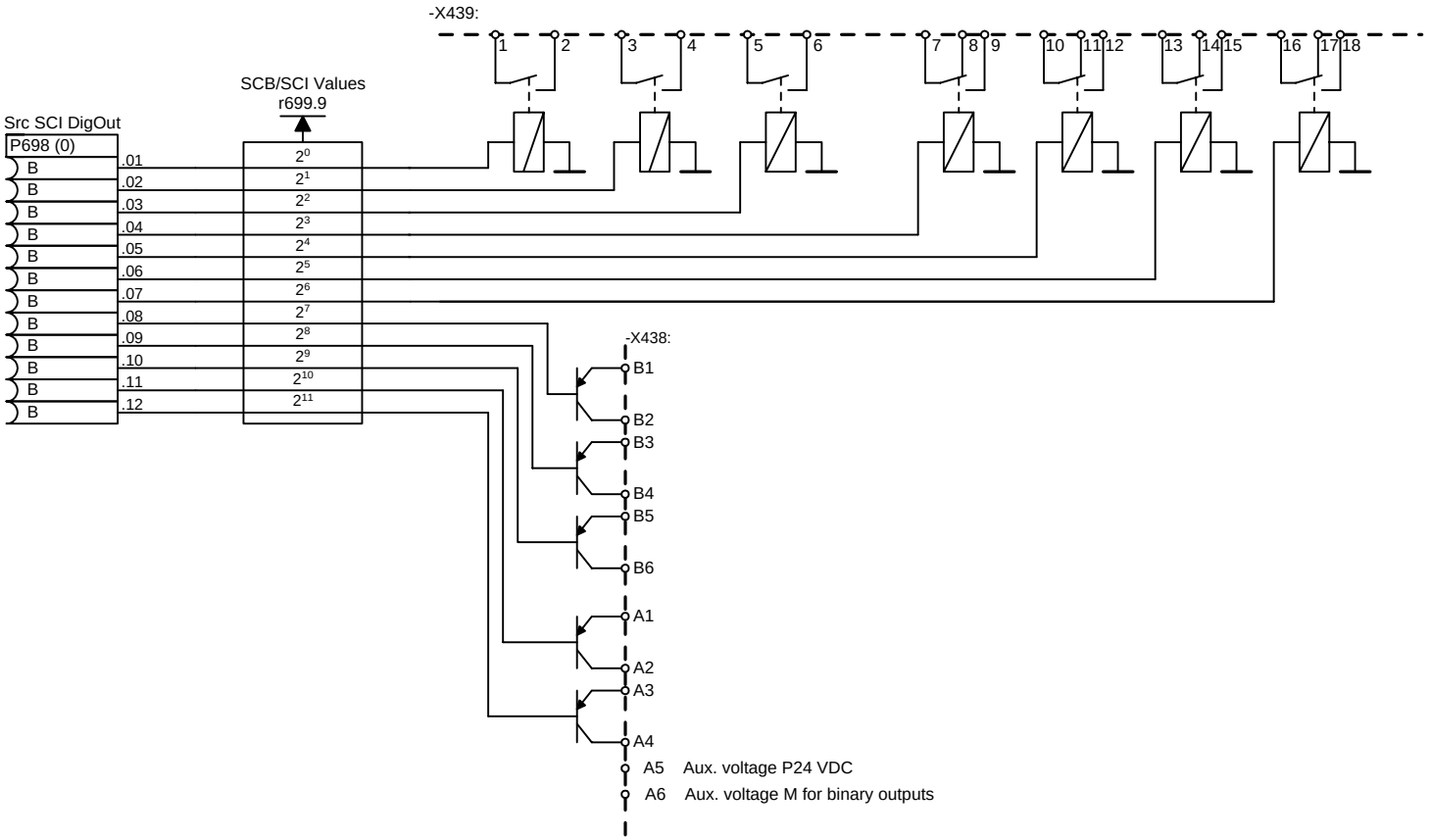

1	2	3	4	5	6	7	8
SCB1 with SCI2				V1.6	fp_mc_Z35_e.vsd	Function diagram	- Z35 -
Digital outputs slave 1			Not with Compact PLUS!		08.01.02	MASTERDRIVES MC	

U953.26 = ___(4)

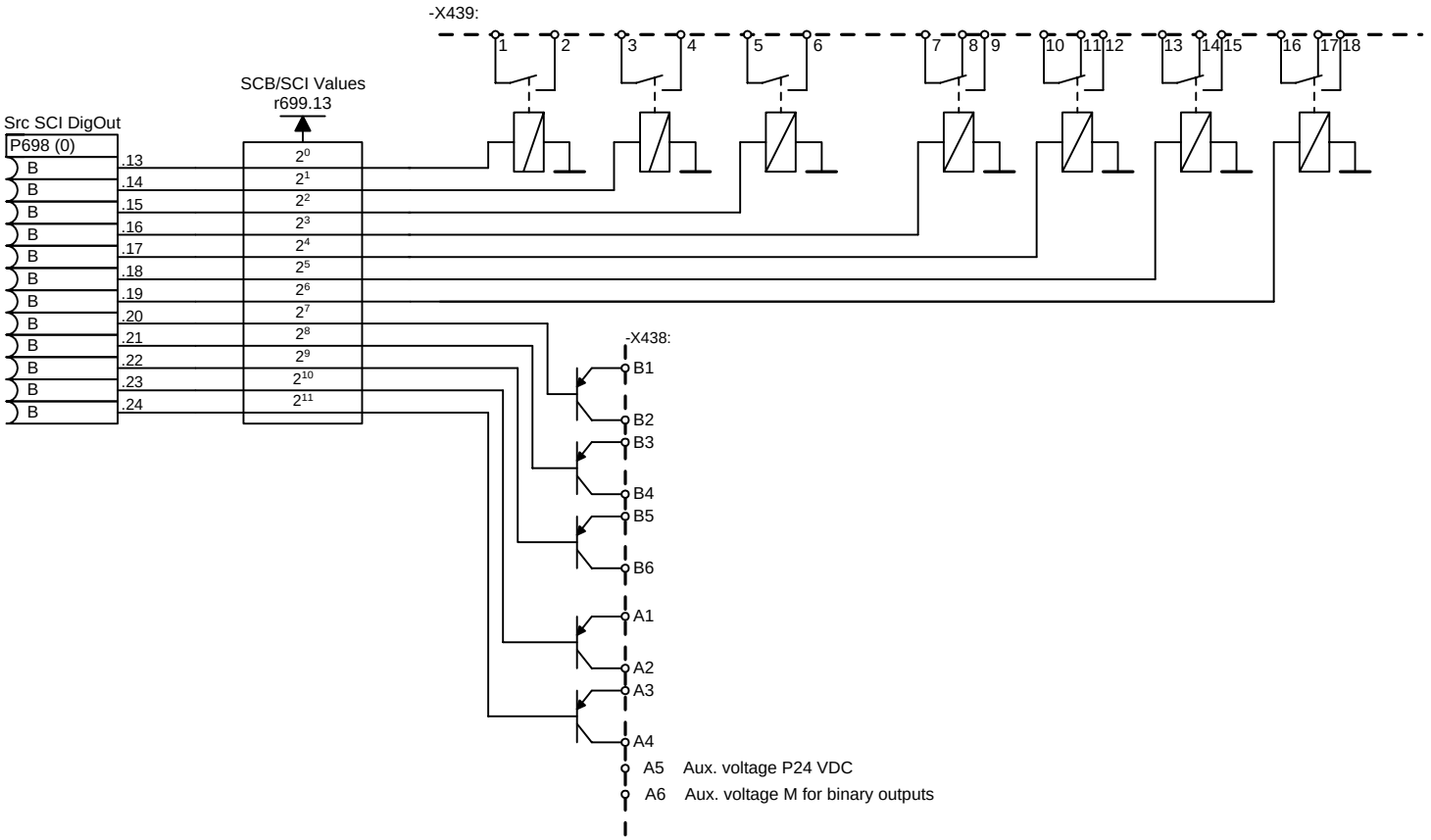

1	2	3	4	5	6	7	8
SCB1 with SCI2				V1.6	fp_mc_Z36_e.vsd	Function diagram	- Z36 -
Digital outputs slave 2			Not with Compact PLUS!		08.01.02	MASTERDRIVES MC	

MASTERDRIVES MC
Function diagram "F01 technology option" (Positioning and synchronization)

Status: 01/2002 V.1.6

Notes: **- The F01 technology option must have been enabled:**

The F01 technology option can only be used with MASTERDRIVES units which are supplied ex-works with the enabled F01 option or for which this option has been enabled retrospectively by means of the PIN No.

The display parameter n978 can be used to check if the F01 option is present:

n978 = 2 ==> F01 technology option has been enabled for 500 hours
n978 = 1 ==> F01 technology option has been enabled
n978 = 0 ==> F01 has been disabled

On sheet [850], you can find out how you can retrospectively enable the technology option on a permanent basis or for a 500-hours trial period.

- The technology functions are performed only if they are specifically nested in a sampling time by means of the assigned U95x parameter; see also sheets [702] and [802]! If the F01 technology option has not been enabled, when an attempt is made to nest a technology function in a sampling time, error message F063 appears.
- The technology functions synchronization (U953.33) and positioning (U953.32) must not be enabled at the same time.
- The following technology function can also be used without enabling of the technology option:
  - 833 - Real master with dead time compensation
- MD1 ... MD50 = Machine data for positioning (stored in parameters U501.01 ... U501.50); see [804]
- LU = **L**ength **U**nit = The unit of length defined by the position-feedback scaling factor (PSF). The PSF is specified by means of P169/P170 [330] if the motor encoder is used and by means of P155/P156 [335] if an external machine encoder is used.

MASTERDRIVES MC function diagram - List of contents of the technology option

Contents	Sheet
General, input/output signals	
Cover sheet	799
List of contents	800
Embedding the technology in the basic unit	801
Technology overview, operating mode manager	802
Machine data	804
Parameter download file "Positioning via bus"	806
Positioning control signals	809
Positioning status signals	811
Digital inputs/outputs for positioning	813
Evaluation and control of position detection	815
Output and release of setpoints	817
Faults, alarms, basic unit control bits	818
Enabling with PIN number	850

Contents	Sheet
Positioning modes of operation	
Set-up mode	819
Homing procedure	821
Reference point setting on the fly	822
MDI mode (point-to-point positioning)	823
Control mode	825
Automatic positioning mode	826
Entering and editing automatic programs	828
Roll feeding	830
Synchronism	
Synchronism operating mode (overview)	831
Virtual master axis	832
Real master with deadtime compensation	833
Engaging/disengaging actionscatch-up	834
Engaging/disengaging actionscatch-up	834a
Electronic gearbox, function changeover	835
Generation of position setpoint	836
Catch-up	837
Cam	839
Cam 1 table with 400 points	839a
Cam 2 tables with 200 points each	839b
Cam 4 tables with 100 points each	839c
Cam 8 tables with 50 points each	839d
Cam with max. 8 tables in variable configurations	839e
Synchronization, displacement angle setting	841
Synchronism - Synchronization	841a
Position correction, referencing	843
Master setpoint correction	845
Master setpoint correction compatible mode	845a
Master setpoint correction speed path	845b
Master setpoint correction position path	845c
Synchronism status signals	846

Contents	Sheet

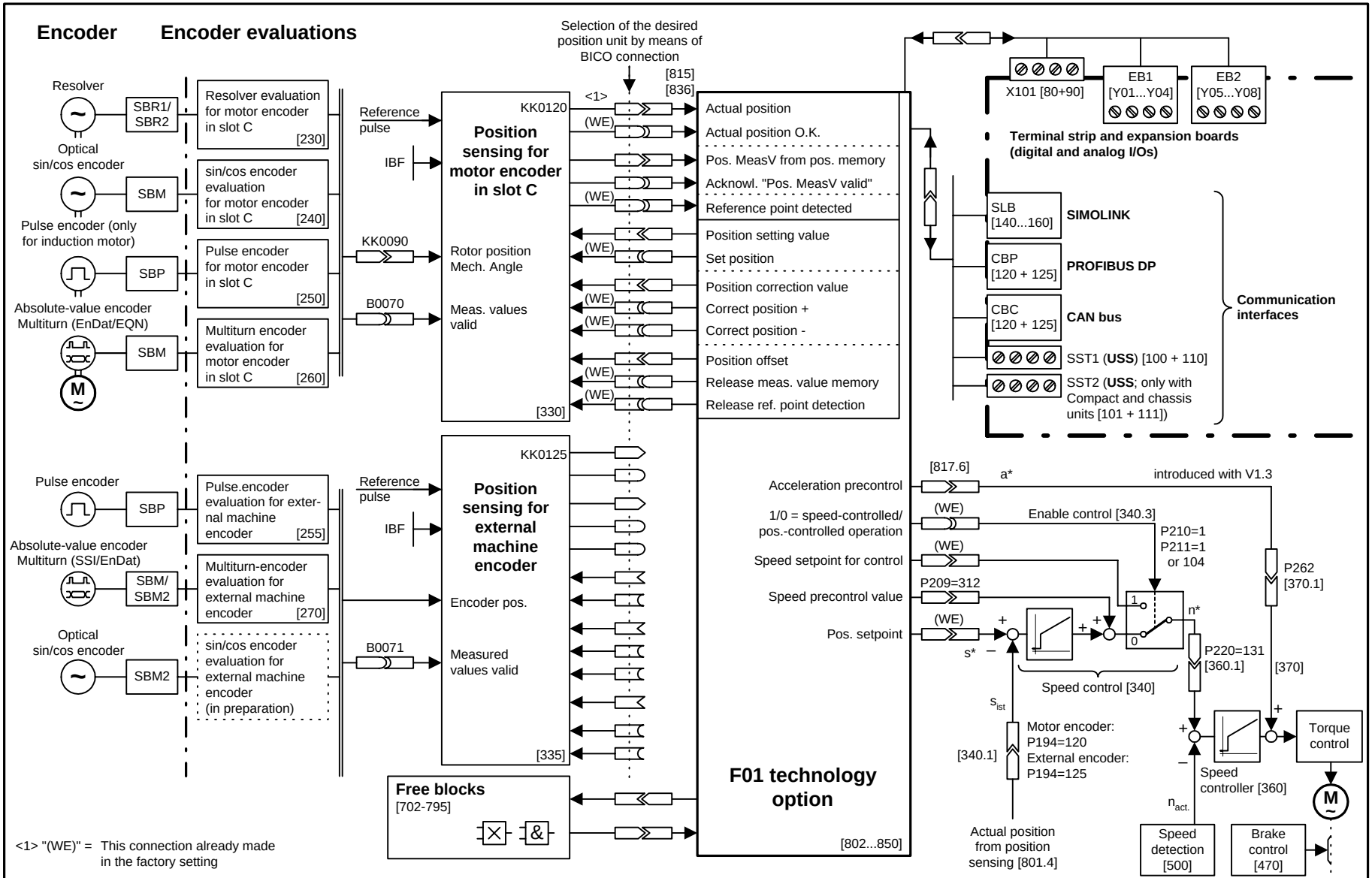

1	2	3	4	5	6	7	8
Technology option				V1.6	fp_mc_801_e.vsd	Function diagram	- 801 -
Embedding the technology in the basic unit					08.01.02	MASTERDRIVES MC	

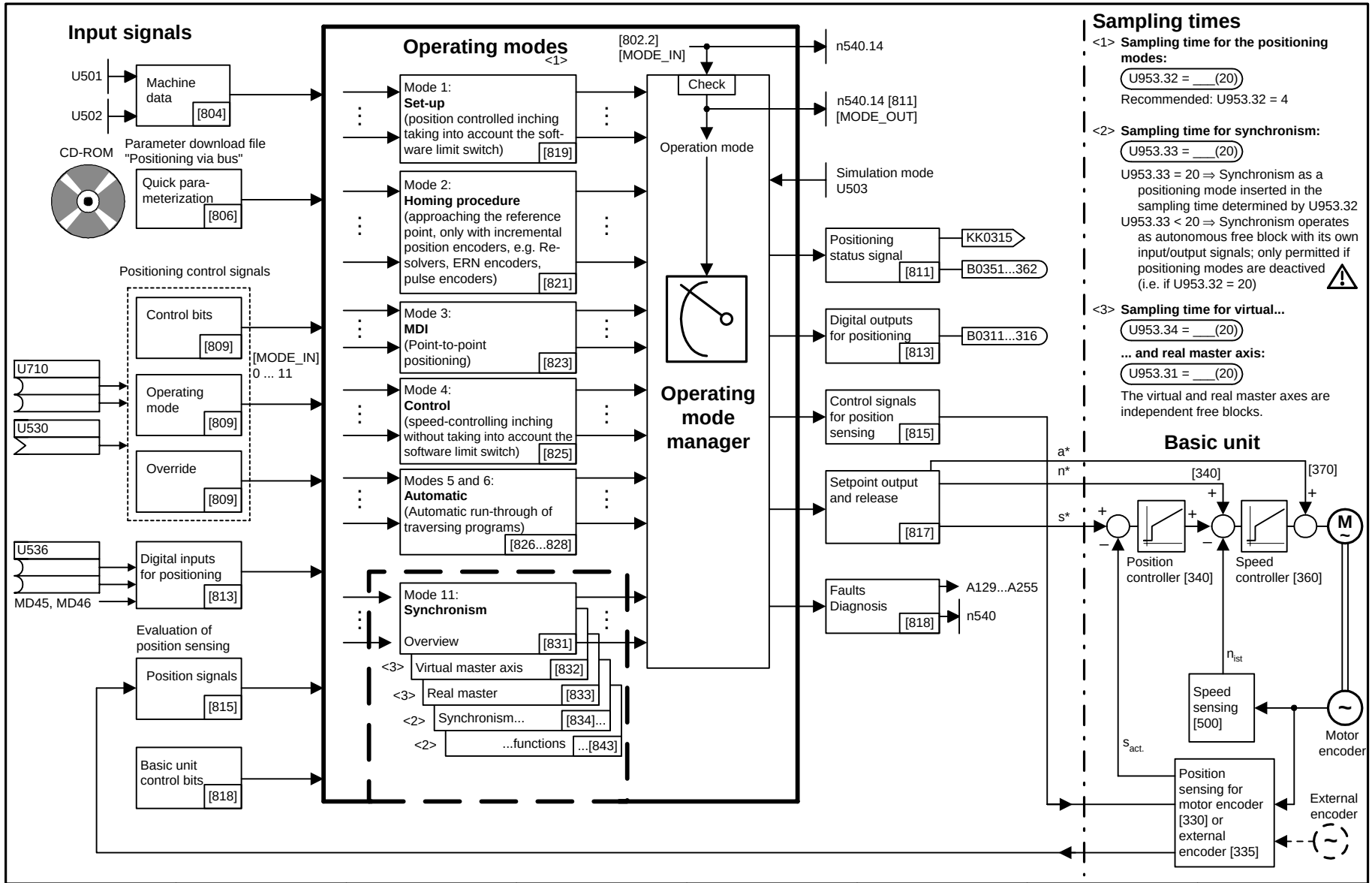

1	2	3	4	5	6	7	8
Technology option				V1.6	fp_mc_802_e.vsd	Function diagram	- 802 -
Technology overview, operating mode manager					08.01.02	MASTERDRIVES MC	

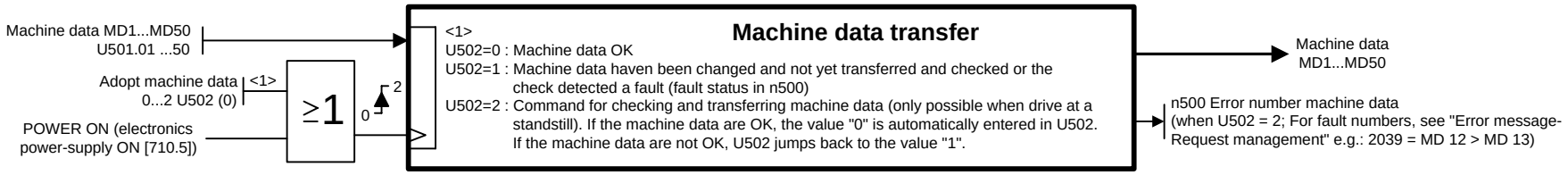

I = Needed for incremental encoder (resolver, ERN encoder, pulse encoder...)
A = Needed for absolute-value encoder (EQN, SSI, ..)
W = Needed for roll feeding

MD No.	I A W <2>	Name (Factory setting) [Page in function diagram]	Range of values
MD1	I A W	Position-encoder type / axis type (1) Reset after an alteration of technology [RST] [809.4] or switch power on/off	0 = Axis does not exist 1 = Axis with incremental position encoder (resolver, ERN encoder, pulse encoder) 2 = Axis with absolute position encoder 3 = Roll feed
MD2	I A W	Axis assignment (1) Name give to the axis for automatic mode	1 = X axis 2 = Y axis 3 = Z axis 4 = A axis 5 = B axis 6 = C axis
MD3	I	Reference-point coordinate (0) [821.4]	-999 999 999... 999 999 999 LU
MD4	I	Reference-point offset (0) [821.5]	-999 999 999... 999 999 999 LU
MD5	I	Reference-point approach (1) [821.3]	1 = Reference point to right of proximity switch 2 = Reference point to left of proximity switch 3 = Set reference point
MD6	I	Reference-point reducing velocity (500) [821.3]	1... 19 999 999 *[x 1000 LU/min]*
MD7	I	Reference-point approach velocity (5000) [821.3]	1... 19 999 999 *[x 1000 LU/min]*
MD8		0 = Homing with bero and zero mark 1 = Homing with bero only 2 = Homing with zero mark only [822]	
MD10	A	Position-encoder alignment (0) [815.4] (offset for absolute-value encoder)	-999 999 999... 999 999 999 LU
MD11	I A W	Linear/rotary axis length (4096) [836.6] [837.3] [841.7]	0 = Linear axis >0 = Rotary axis 1... 999 999 999 LU = Length of rotary axis
MD12	I A	Software limit switches - negative, for linear axis (-999 999 999) [819.7] [823.7]	-999 999 999... 999 999 999 LU
MD13	I A	Software limit switches - positive, for linear axis (999 999 999) [819.7] [823.7]	-999 999 999... 999 999 999 LU
MD14	I A W	Following error monitoring - at standstill (100) [818.6]	1... 100 000 LU
MD15	I A W	Following error monitoring - in motion (20 000) [818.6]	1... 999 999 999 LU
MD16	I A W	In position - timer monitoring (500)	10... 99 999 ms [811.4]
MD17	I A W	In position erreicht - exact stop (100)	1... 99 999 LU [811.4]
MD18	I A W	Acceleration (1000) [819.5] [823.4]	1... 99 999 [x 1000 LU/s ^{2}]
MD19	I A W	Deceleration (1000) [819.5] [823.5]	1... 99 999 *[x 1000 LU/s^2]*
MD20	I A W	Deceleration for collision (1000) for autom. mode	0... 99 999 *[x 1000 LU/s^2]*
MD21	W	Jerk limiting - positive for roll feeding (0) [830]	1... 999 999 *[x 1000 LU/s^2]* 0 = inactive
MD23	I A W	Traversing velocity - maximum (12 288) must be = P205 [340.2] [817.5] [836.7]	0... 19 999 999 *[x 1000 LU/min]* [821.5] [825.5][837.2]
MD24	I A W	M functions - output type (1) for automatic mode	1 = During positioning, time-driven 2 = During positioning, acknowledge-driven 3 = Before positioning, time-driven 4 = Before positioning, acknowledge-driven 5 = After positioning, time-driven 6 = After positioning, acknowledge-driven
MD25	I A W	M functions output time (500) for automatic mode	4... 99 999 ms
MD26	I A W	Time override (1) for MDI and automatic mode	0 = Time override active 1 = Time override inactive

MD-No.	I A W <2>	Name (Factory setting) [Page in function diagram]	Range of values
MD29	W	Acceleration breakpoint - velocity for roll feeding (0) [830.2]	1... 1 500 000 [x 1000 LU/min] 0 = inactive
MD30	W	Deceleration breakpoint - velocity for roll feeding (0) [830]	1... 1 500 000 *[x 1000 LU/min]* 0 = inactive
MD31	W	Accelerating breakpoint - acceleration for roll feeding (0) [830]	1... 99 999 *[x 1000 LU/s^2]* 0 = inactive
MD32	W	Deceleration breakpoint - deceleration for roll feeding (0) [830]	1... 99 999 *[x 1000 LU/s^2]* 0 = inactive
MD33	W	Constant travel time for roll feeding (0) [830]	1.. 99 999 ms 0 = inactive
MD34	W	Pre-position reached - lead time for roll feeding (0) [830]	1... 99 999 ms 0 = inactive
MD35	W	Pre-position reached - output time for roll feeding (0) [830]	1... 99 999 ms 0 = inactive
MD36	W	Acceleration overshoot (0) [830]	0... 100% (for roll feeding)
MD37	W	Response after abort (0) [830] for roll feeding	0 = Standard response 1 = Approach last target position with no evaluation of direction of movement 2 = Approach last target position with evaluation of direction of movement
MD38	I A W	Backlash compensation (0)	0... 9 999 LU
MD39	A	Backlash compensation - preferred position (1) with absolute position encoder	1 = Preferred position positive (no backlash compensation calculated during first positive traversing movement) 2 = Preferred position negative (no backlash compensation calculated during first negative traversing movement)
MD40	I A W	Backlash compensation - velocity limitation (999)	1... 999 *[x 1000 LU/min]* 0 = inactive
MD41	I A W	Acceleration time, operating mode "reference-point approach/control" (1000) [821.4] [825.5]	1... 99 999 ms (from 0 to MD23 [340.2]) 0 = inactive
MD42	I A W	Deceleration time, operating mode "reference-point approach/control" (1000) [821.4] [825.5]	1... 99 999 ms (from MD23 to 0 [340.2]) 0 = inactive
MD43	I A W	Deceleration time during errors (1000) e.g. when following error > MD15 [818.7]	1... 99 999 ms (from MD23 to 0) 0 = inactive (jump function)
MD44	I A W	External block change - setting (0) for automatic mode	0 = Warning at end of NC block 1 = No warning at end of NC block
MD45	I A W	Digital inputs E1... E6 for positioning - function 1 (0) [813.3]	0... 9 (range of values per decade)
MD46	W	Digital inputs E1... E6 for positioning - function 2 (0) [813.5]	0... 4 (range of values per decade)
MD47	I A W	Digital outputs A1... A6 for positioning - funktion 1 (0) [813.3]	0... 6 (range of values per decade)
MD48	W	Digital outputs E1... E6 for positioning - function 2 (0) [813.5]	0... 5 (range of values per decade)
MD49	I A W	Precontrol - velocity Evaluation factor (0) [817.6]	0... 150 %
MD50	I A W	Precontrol - Acceleration Evaluation factor (0) [817.5]	1... 99 999 [x 1000 LU/s ^{2}] 0 = Acceleration precontrol switched off

Parameter download file for controlling positioning / synchronization via the CBx field-bus interface (e.g. via PROFIBUS DP)

By means of this SIMOVIS / DriveMonitor download file, 10 process-data words are assigned to each field-bus telegram in the transmit and receive directions in accordance with Ch. 2, "Description of functions" (see manual "Motion Control for MASTERDRIVES MC and SIMATIC M7")

This download file is located on your SIMOVIS / DriveMonitor CD-ROM or floppy disk under the following name:

SIMOVIS for DOS:

- **POS_1_1.MCD+POS_1_1.M2D** for Compact PLUS units (Download both files)
- **POS_1_1.SCD+POS_1_1.S2D** for compact and chassis-type units with CUMC (Download both files)

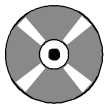

SIMOVIS / DriveMonitor for WINDOWS 95 and higher:

- **POS_1_1.DNL** (Download this file. Is equally valid for Compact PLUS, Compact and chassis-type units)

Communication - General:

```
P53 = 7          ; Parameter access from CBx, PMU and USS
P722.1 = 500     ; Telegram OFF time 500 ms                    [120.1]
```

CBx receive word 1

Connect up basic unit control bits from CBx[120] ⇒ [180]:

```
P554.1 = 3100  ; [OFF1] from bit 0
P555.1 = 3101  ; [OFF2] from bit 1
P558.1 = 3102  ; [OFF3] from bit 2
P561.1 = 3103  ; [ENC] Inverter release from bit 3
P565.1 = 3107  ; [ACK_F] Fault acknowledgement from bit 7
```

CBx receive words 2 and 3

Connect up position control bit from CBx [120]⇒ [809]:

```
U530 = 3032    ; Receive words 2 and 3 (bytes 2-5) = Positioning control word
```

CBx receive word 4

Connect up synchronism control bits from CBx [120]⇒ [832...839]:

```
U619   = 3400  ; [SET_T] Set table                          [839.4] from bit  0
U612.2 = 3402  ; [SST] Eng./diseng. trigger signal          [834.2] from bit  2
U621   = 3403  ; [SYN_T] Synchronizing table                [839.4] from bit  3
U650   = 3404  ; [TABLE_NO] Selec. of current table         [839.7] from bit  4
U684.2 = 3407  ; [ST_VM] START virtual master               [832.2] from bit  7
U657.1 = 3408  ; [FUNCTION; Bit 0]                          [836.4] from bit  8
U657.2 = 3409  ; [FUNCTION; Bit 1]                          [836.4] from bit  9
U656.1 = 3410  ; [OPERATION; Bit 0]                         [834.5] from bit 10
U656.2 = 3411  ; [OPERATION; Bit 1]                         [834.5] from bit 11
U612.1 = 3412  ; [SSC] Eng./diseng. action permanent        [834.2] from bit 12
U684.3 = 3414  ; [S_VM] SET virtual master                  [832.2] from bit 14
U684.1 = 3415  ; [R_VM] RESET virtual master                [832.2] from bit 15
```

CBx transmit word 1

Connect up basic unit control bits [200] [210] to CBx word 1 [125] with the help of the binector / connector converter U076/K431 [720]

```
U076.1  = 100  ; Bit 0  from  K431 =  [RTS]    1 = Ready for switch-on
U076.2  = 102  ; Bit 1  from  K431 =  [RDY]    1 = Ready for operation
U076.3  = 104  ; Bit 2  from  K431 =  [IOP]    1 = Operation
U076.4  = 106  ; Bit 3  from  K431 =  [FAULT]  1 = Fault
U076.5  = 108  ; Bit 4  from  K431 =  [OFF2]   0 = OFF2
U076.6  = 110  ; Bit 5  from  K431 =  [OFF3]   0 = OFF3
U076.7  = 114  ; Bit 6  from  K431 =  [WARN]   1 = Alarm
U076.8  = 0    ; Bit 7  from  K431 = 0 (Reserve)
U076.9  = 136  ; Bit 8  from  K431 =  [SMAX]   0 = Overspeed [480]
U076.10 = 144  ; Bit 9  from  K431 =  [OLC]    1 = Alarm, converter overload
U076.11 = 148  ; Bit 10 from  K431 =  [OTC]    1 = Alarm, converter overtemp.
U076.12 = 150  ; Bit 11 from  K431 =  [OTM]    1 = Fault motor overtemp.
U076.13 = 0    ; Bit 12 from  K431 = 0 (Reserve)
U076.14 = 0    ; Bit 13 from  K431 = 0 (Reserve)
U076.15 = 0    ; Bit 14 from  K431 = 0 (Reserve)
U076.16 = 0    ; Bit 15 from  K431 = 0 (Reserve)
U952.89 = 4    ; Nest binector / connector converter in time slot T4
P734.1  = 431  ; Connect up its output K431 to CBx word 1
```

CBx transmit word 2

Connect up fault number and alarm number [510] to the CBx [125]:

```
P734.2 = 250
```

CBx transmit words 3 and 4

Connect up positioning status word [811] to the CBx [125]:

```
P734.3 = 315   ; Hi word to CBx transmit word 3
P734.4 = 315   ; Lo word to CBx transmit word 4
```

Nest technology in time slot

```
U953.32 = 4    ; Nest positioning technology in time slot T4
               ; (= 3.2 ms with 5 kHz clock frequency) [802.7]
U953.34 = 4    ; Nest virtual master in T4 [832]
```

Establishing connection between pos. controller and speed controller via ramp-function generator

```
P443.1 = 131   ; Pos. controller output [340.8] to ramp-function gen. [310.1]
P220.1 = 75    ; Connect up ramp-function generator output [320.8]
               ; to speed controller input [360.1]
P462.1 = 0     ; Acceleration time = 0 [320.3]
P464.1 = 0     ; Deceleration time = 0 [320.3]
```

Release for position controller [340.3] (see also [817])

```
P210.1 = 1     ; Release position controller 1 permanently to "1"
P211.1 = 104   ; Release position controller 2 from status word 1, bit 2 "Operation"
P213   = 305   ; Release controller
```

Connecting up speed precontrol from technology:

```
P209.1 = 312   ; Connect up speed precontrol value [817] to adding point
               ; behind speed controller [340.7]
```

Connecting up digital inputs / outputs for positioning

```
P647.1 = 3     ; Input E4 = Terminal X101.6 = Adoption of actual position
               ; into the measured-value memory with rising
               ; edge [90.5] [330.5]
P651.1 = 311   ; Outputs A1, A2, A3 from technology [813]
P652.1 = 312   ; ... ⇒ digital output terminals X101.3...5
P653.1 = 313   ; ... [90.5]
```

Connecting up technology ⇔ position sensing motor encoder slot C

```
P178 = 20      ; Digital input DE6 terminal X101.8            [90.5] as rough-pulse
               ; proximity switch for position detection      [330.5]
P172 = 302     ; Position setting value                       [815.5] ⇒ [330.5]
P174 = 301     ; Position correction value                    [815.5] ⇒ [330.5]
P184 = 303     ; Position offset                              [815.5] ⇒ [330.7]
U535 = 120     ; Actual offset                                [330.8] ⇒ [815.3]
U539 = 122     ; Position measured value from position memory [330.7] ⇒ [815.3]
```

Connecting up synchronous-operation position correction [843] with position sensing slot C [330]:

```
U666 = 212     ; "Start position correction" by means of "Meas. val. valid" [330.7]
U665 = 122     ; "Pos. meas. value" to "Actual position for interrupt" [330.7]
```

Configuration of the virtual master axis

```
U683 = 1       ; Specification of the speed setpoint in
               ; [10 LU/min] [832.2]
```

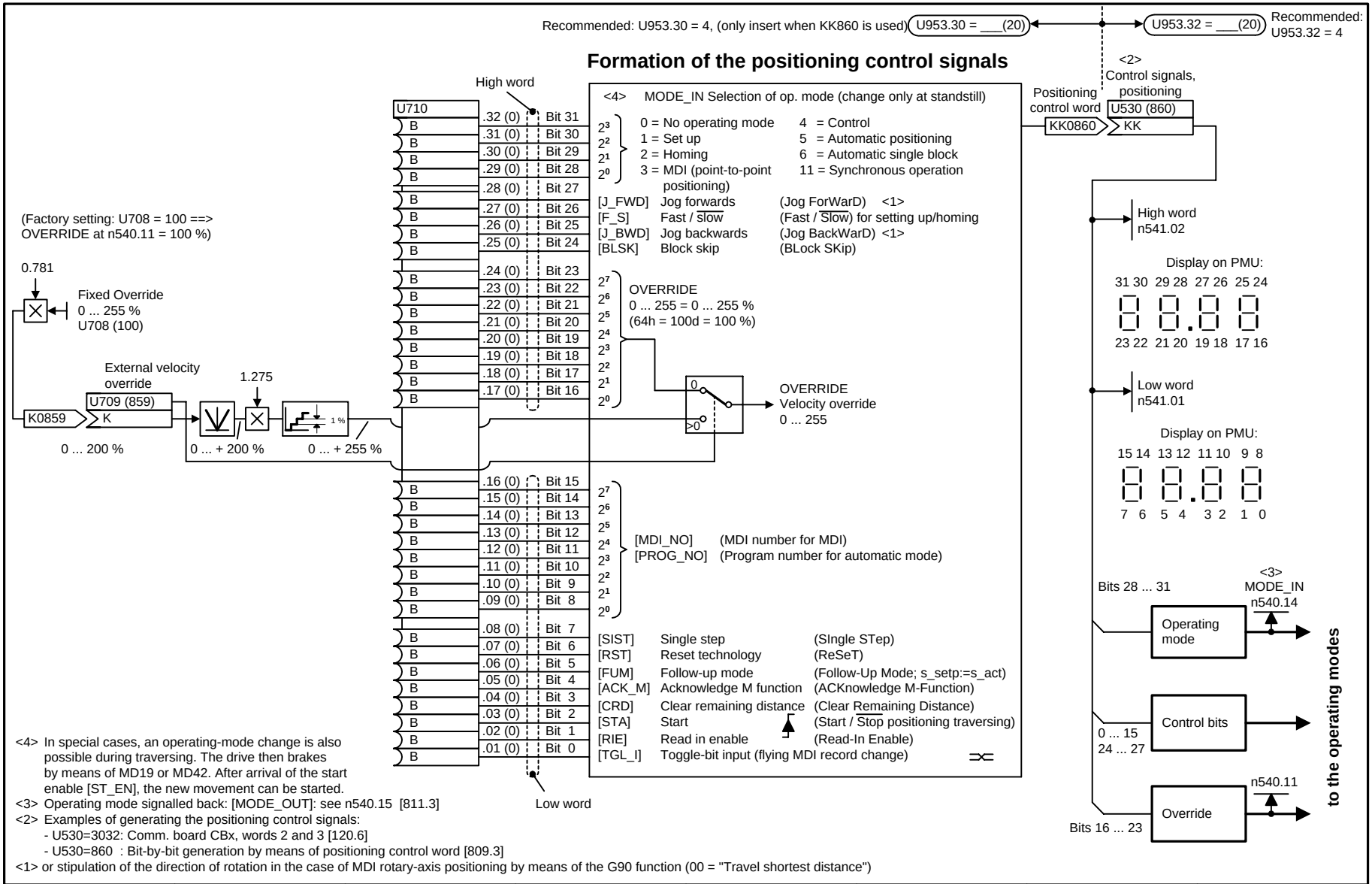

<4> In special cases, an operating-mode change is also possible during traversing. The drive then brakes by means of MD19 or MD42. After arrival of the start enable [ST_EN], the new movement can be started.
<3> Operating mode signalled back: [MODE_OUT]: see n540.15 [811.3]
<2> Examples of generating the positioning control signals:
- U530=3032: Comm. board CBx, words 2 and 3 [120.6]
- U530=860 : Bit-by-bit generation by means of positioning control word [809.3]
<1> or stipulation of the direction of rotation in the case of MDI rotary-axis positioning by means of the G90 function (00 = "Travel shortest distance")

1	2	3	4	5	6	7	8
Technology option				V1.6	fp_mc_809_e.vsd	Function diagram	- 809 -
Positioning control signals					08.01.02	MASTERDRIVES MC	

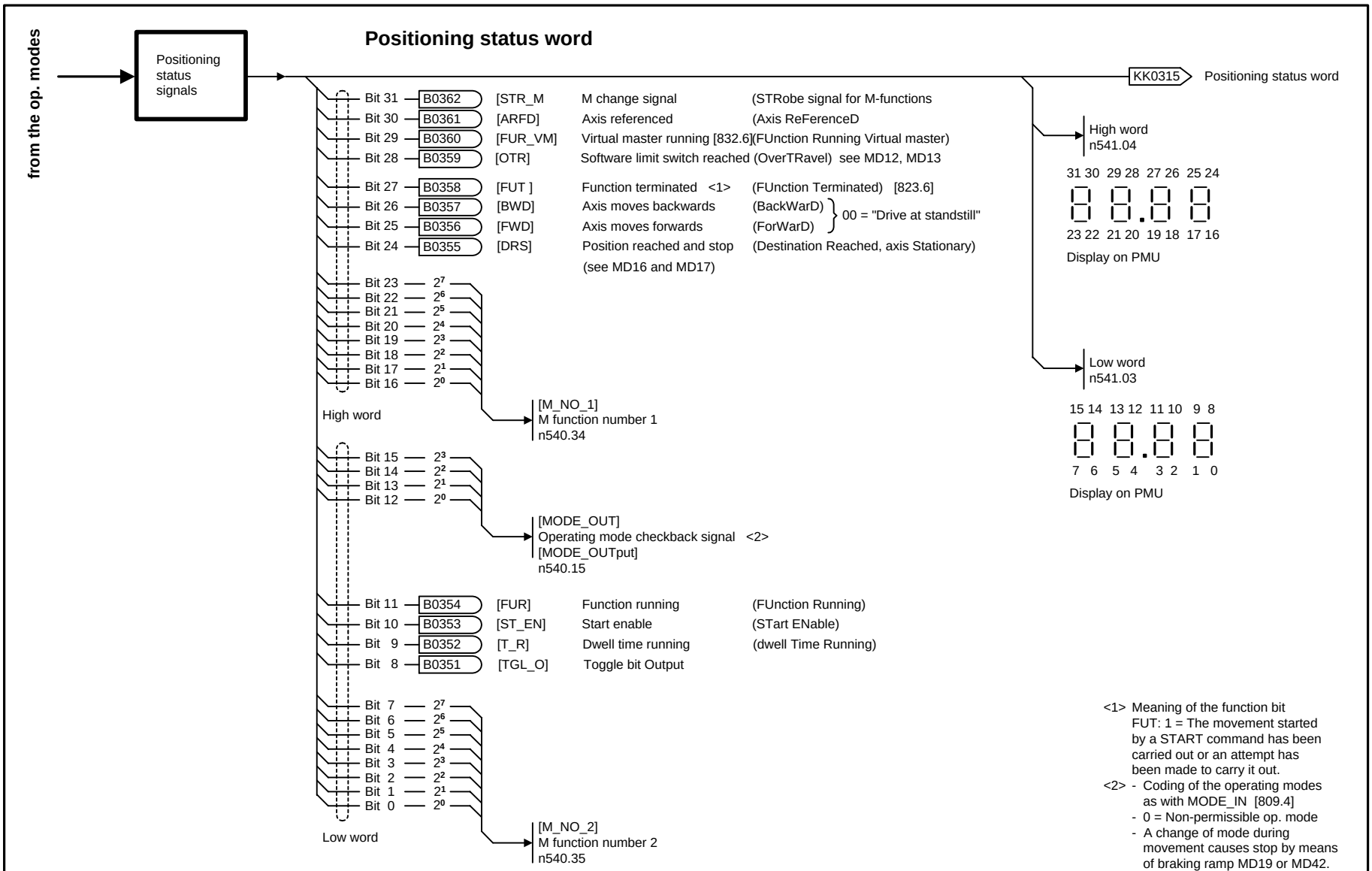
from the op. modes
Positioning status signals
Positioning status word
KK0315
Positioning status word
Bit 31 B0362 [STR_M M change signal (STRobe signal for M-functions
Bit 30 B0361 [ARFD] Axis referenced (Axis ReFerenceD
Bit 29 B0360 [FUR_VM] Virtual master running [832.6] (FUnction Running Virtual master)
Bit 28 B0359 [OTR] Software limit switch reached (OverTRavel) see MD12, MD13
Bit 27 B0358 [FUT] Function terminated <1> (FUnction Terminated) [823.6]
Bit 26 B0357 [BWD] Axis moves backwards (BackWarD)
Bit 25 B0356 [FWD] Axis moves forwards (ForWarD)
00 = "Drive at standstill"
Bit 24 B0355 [DRS] Position reached and stop (Destination Reached, axis Stationary)
(see MD16 and MD17)
High word
n541.04
31 30 29 28 27 26 25 24
23 22 21 20 19 18 17 16
Display on PMU
Bit 23 2^7
Bit 22 2^6
Bit 21 2^5
Bit 20 2^4
Bit 19 2^3
Bit 18 2^2
Bit 17 2^1
Bit 16 2^0
High word
[M_NO_1]
M function number 1
n540.34
Low word
n541.03
15 14 13 12 11 10 9 8
7 6 5 4 3 2 1 0
Display on PMU
Bit 15 2^3
Bit 14 2^2
Bit 13 2^1
Bit 12 2^0
[MODE_OUT]
Operating mode checkback signal <2>
[MODE_OUTput]
n540.15
Bit 11 B0354 [FUR] Function running (FUnction Running)
Bit 10 B0353 [ST_EN] Start enable (STart ENable)
Bit 9 B0352 [T_R] Dwell time running (dwell Time Running)
Bit 8 B0351 [TGL_O] Toggle bit Output
Bit 7 2^7
Bit 6 2^6
Bit 5 2^5
Bit 4 2^4
Bit 3 2^3
Bit 2 2^2
Bit 1 2^1
Bit 0 2^0
Low word
[M_NO_2]
M function number 2
n540.35
<1> Meaning of the function bit
FUT: 1 = The movement started by a START command has been carried out or an attempt has been made to carry it out.
<2> - Coding of the operating modes as with MODE_IN [809.4]
- 0 = Non-permissible op. mode
- A change of mode during movement causes stop by means of braking ramp MD19 or MD42.

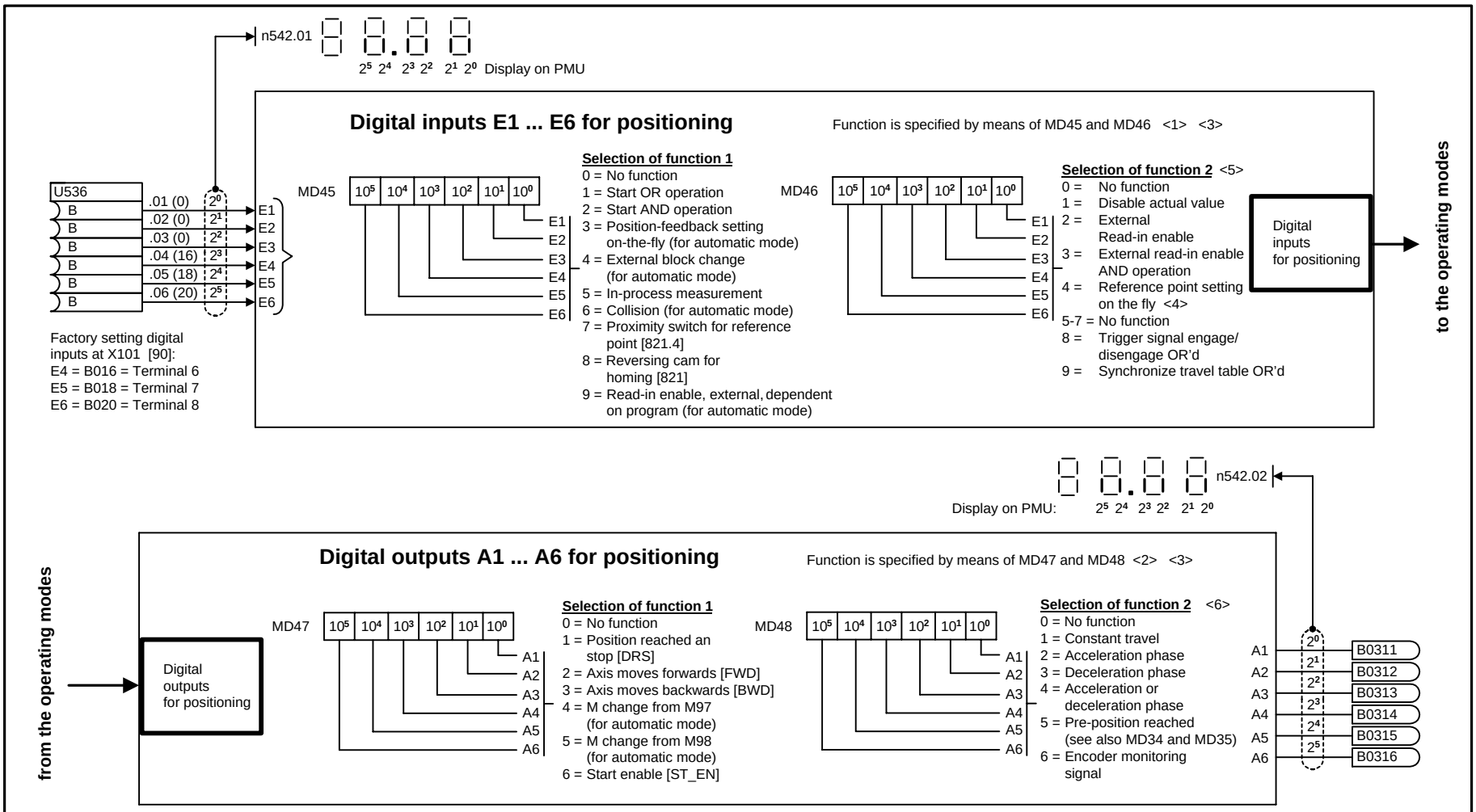

<1> Example of configuring the digital inputs for positioning:
MD45=7xxxxx) ==> Digital input, terminal X101.8 [90] =
Reference-point proximity switch U536.06 = 20)

<2> Example of assigning the digital outputs for positioning:
MD47 = xxx4xx ==> Binector B313 = "M change from M97"

<3> Double assignment of an input or output with more than one function is not premitted.

<4> The measured position value memory is used for this function, and one of the digital inputs, terminal 6 or 7, must be used [90.3].

<5> Function 1 - 3 for roller feed only

<6> For roller feed only

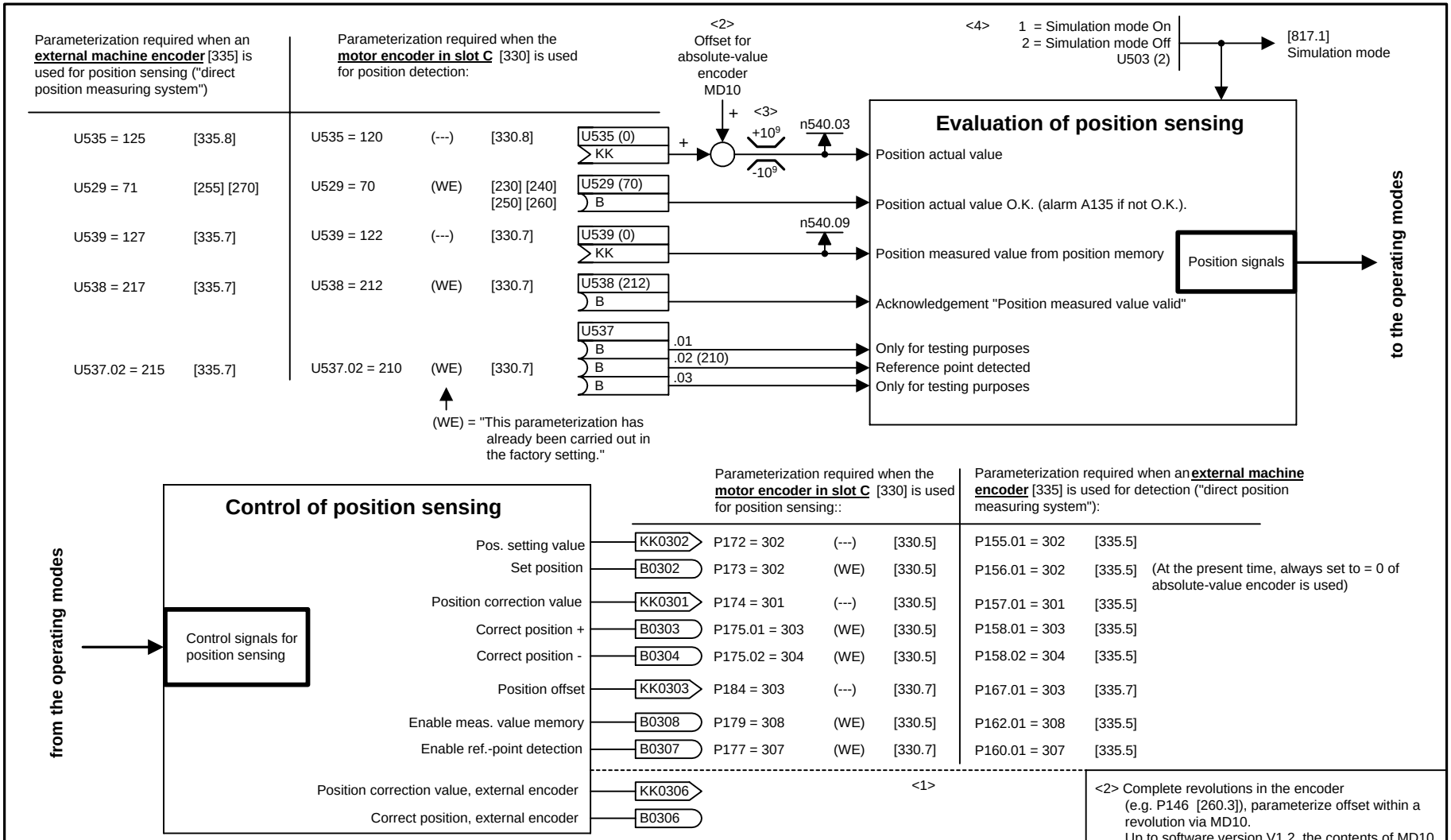

<4> To activate / deactivate the simulation mode, the command [RST] "Reset Technology" must be additionally issued or the electronics power supply must be switched off / on.

<1> See also note <7> on sheet [836] regarding pos. sensing during synchronous operation.

<2> Complete revolutions in the encoder (e.g. P146 [260.3]), parameterize offset within a revolution via MD10.
Up to software version V1.2, the contents of MD10 are lost when the electronics power-supply is turned off.

<3> The technology limits the position actual value to the range -999 999 999 ... +999 999 999 (position sensing system supplies -2^{31} ... $+2^{31}$)

Setpoint output and enabling

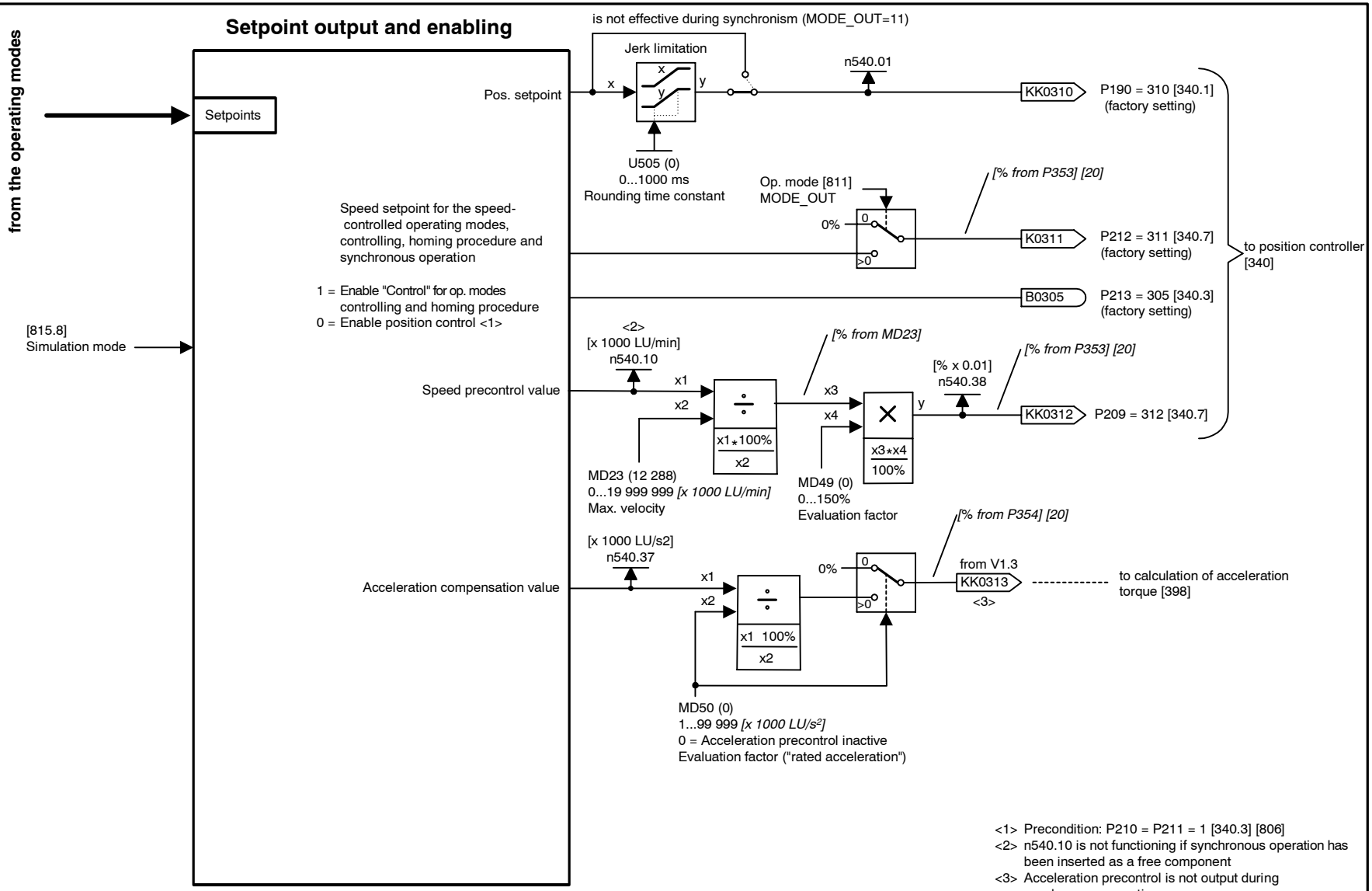

<1> Precondition: P210 = P211 = 1 [340.3] [806]
<2> n540.10 is not functioning if synchronous operation has been inserted as a free component
<3> Acceleration precontrol is not output during synchronous operation

Up to V1.0, these 3 signals from the basic unit were not permanently connected up but had to be connected up via U529.1-3.

Basic unit control bits

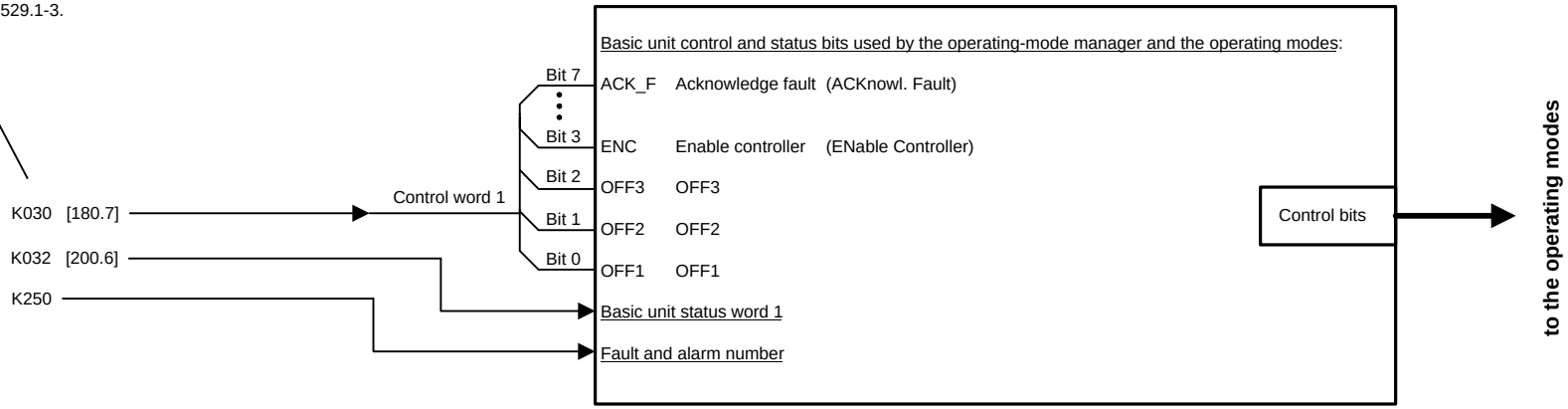

Faults, alarms, diagnosis

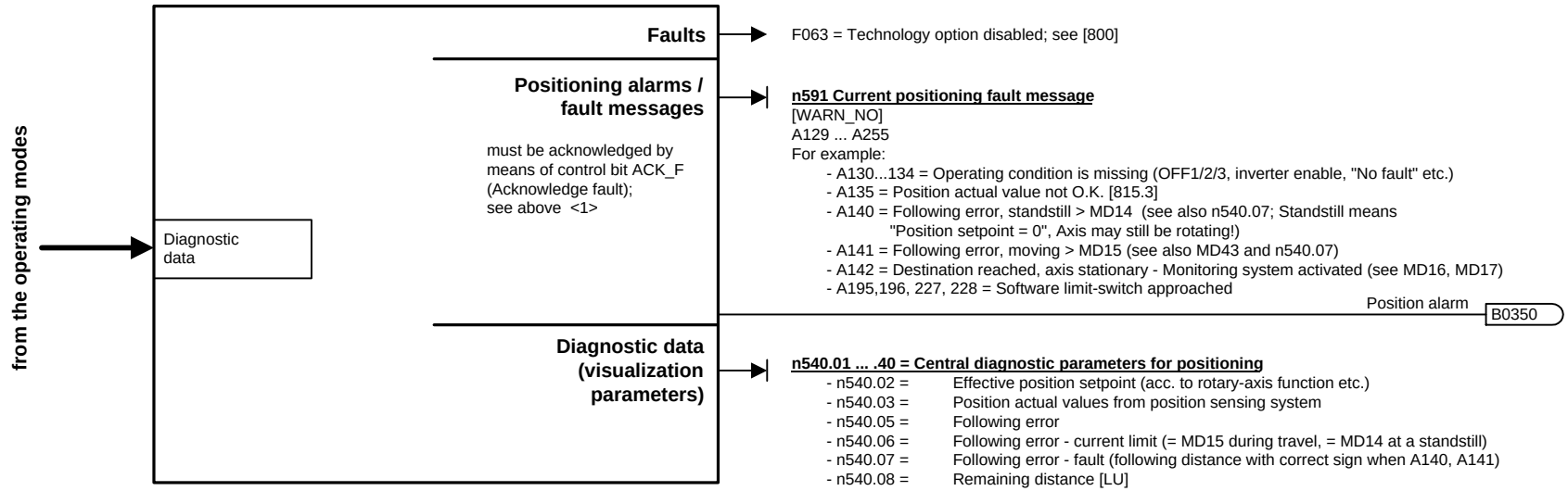

<1> Acknowledgement possible via PMU, binector and serial interface, not via OP1S

<1>

Set-up mode (position-controlled jogging with limit-switch evaluation)

Sampling time for positioning

U953.32 = ___(20)

Recommended: U953.32=4

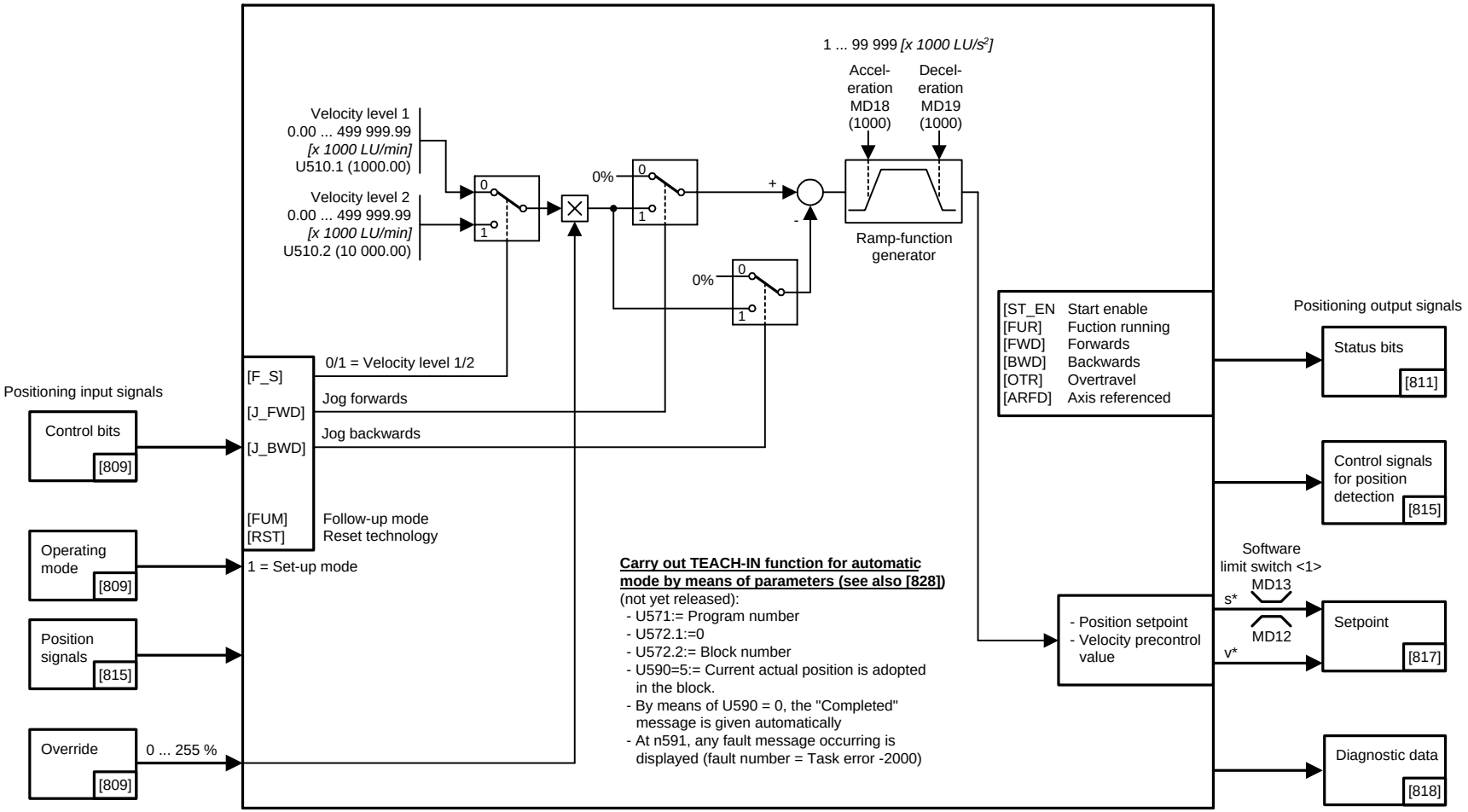

<1> The software limit switches are only evaluated on incremental position encoders if the axis is referenced (status bit [ARFD]=1)

<1>The homing position direction of approach in MD5 must correspond to the parameterization of position sensing (e.g.. P183 if the motor encoder is used in slot C [330.2]), i.e.:
MD5 = 1 ==> increasing positions from A to B ==> P183 = xx1x
MD5 = 2 ==> decreasing positions from A to B ==> P183 = xx2x

<2> If the technology option F01 in MASTERDRIVES MC is used, the "Homing position setting value" in position sensing (e.g. P176 [330]) is not required

<3> The BERO must be adjusted mechanically or via P188 [330.2] such that the falling edge of the BERO signal does not fall together with the encoder zero position (e.g. as can be observed at KK090 [550])

<4> **Special case MD5=3: Directly set homing position without approach:**

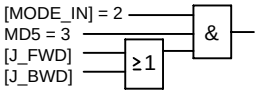

Set position setpoint and actual value to MD3 (Beforehand, traverse through any displacement path MD4 with speed MD6)

<5> Acceleration/deceleration times MD41/42 refer to a traversing action from 0 to MD23 or from MD23 to 0.

<6> Homing with automatic reversal at reversing cam right and/or left, see [813.4]

Sampling time for positioning

U953.32 = ___(20)

Recommended: U953.32 = 4

Special case: Bero and rotor zero position (as shown)
Special case: Homing with bero only: MD8 = 1
Special case: Homing with rotor zero position only or zero pulse only: MD8 = 2

Positioning input signals

Control bits [809]

Operating Mode [809]

Position signals [815]

Digital inputs for positioning [813]

Override [809]

Homing Procedure operating mode

[J_FWD] forwards
[J_BWD] backwards

2 = Operating mode Homing procedure

Homing position sensed

BERO signal (with MD45 [813.4] and P178 [330.5] determined)

-999 999 999 ... 999 999 999 LU
Home position coordinate MD3 (0)
Home positon displacement MD4 (0)

Direction of approach MD5 <4> <1>

Set actual value to MD3 here

A B

<6> Reversing cam <6> Reversing cam

BERO range

Speed control ↔ Position control

Approach speed
1 ... 19 999 999 *[x 1000 LU/min]*
MD7 (5000)

v*

MD4 = 0

Speed

s

MD6 (500)
1 ... 19 999 999 *[x 1000 LU/min]*
Reducing speed

<5> MD41 (1000) 1...99 999 ms Accel Time

MD42 (1000) 1...99 999 ms Decel Time

MD18 / 19 (1000)
1 ... 99 999 *[x 1000 LU/s²]*
acceleration / deceleration position-controlled

J_FWD or J_BWD

Rough pulse

Rotor zero position <3>

[ST_EN] Start enable
[FUR] Processing runs
[DRS] Destination reached and stationary
[FWD] Forwards
[BWD] Backwards
[FUT] Function finished
[ARFD] Axis is homed

- Homing procedure enable

Positioning output signals

Status bits [811]

Control signals for position sensing [815]

Setpoints [817]

v*

a*

Diagnostic data [818]

1	2	3	4	5	6	7	8
Technology option				V1.6	fp_mc_821_e.vsd	Function diagram	- 821 -
Homing procedure operating mode					08.01.02	MASTERDRIVES MC	

Reference point setting on the fly

(acts in control, setup, MDI and automatic)

For synchronism, see [843]

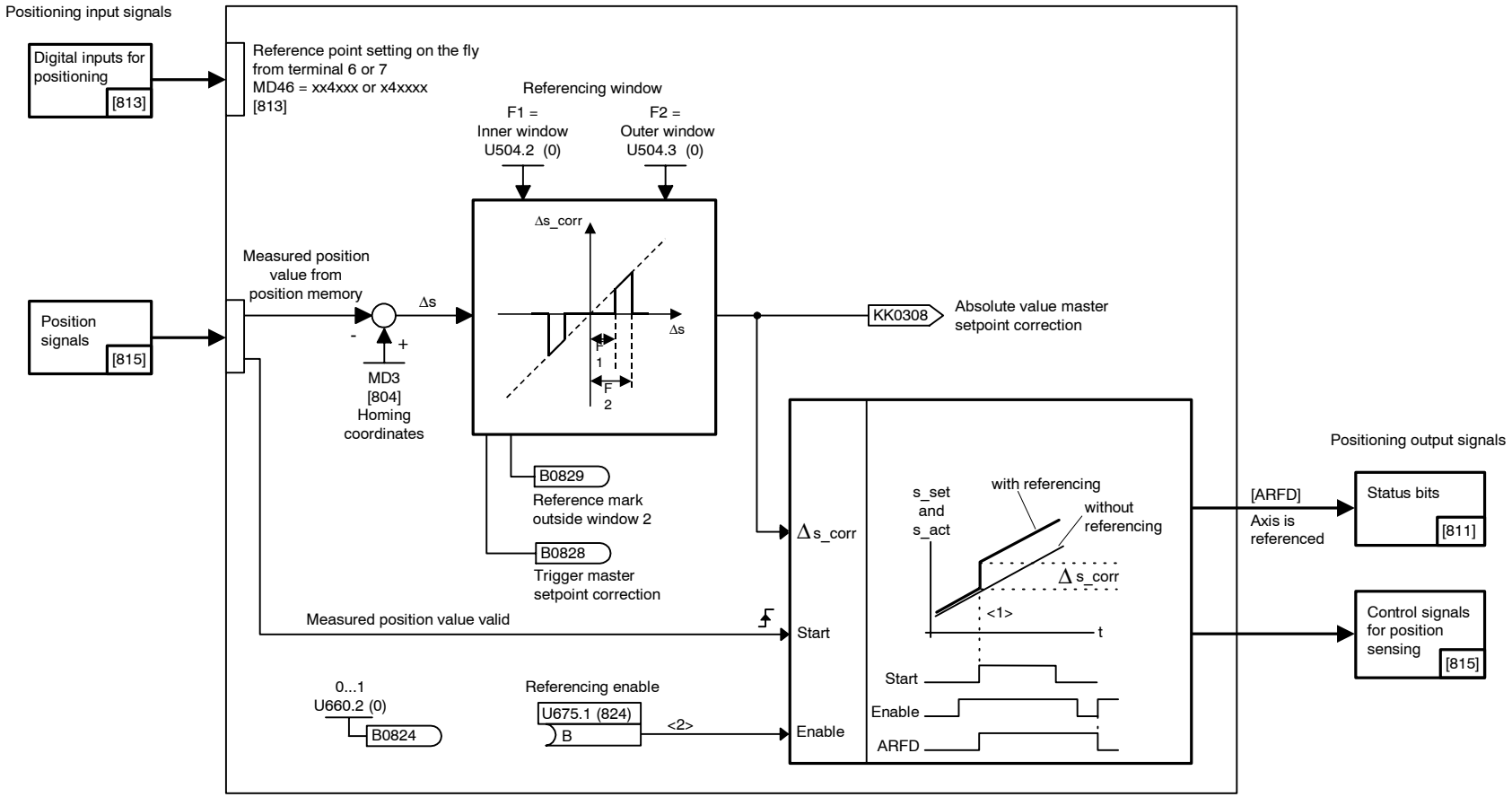

<1> During referencing, only the position setpoint and actual value are corrected by the same amount in each case. No compensation movement takes place.

<2> Referencing on the fly is enabled dynamically with "Enable referencing" (binector input U675.1).
The interrupt-generating digital inputs of terminal 6 or 7 are parameterized via MD46. Referencing is activated by the signal "Measured position value valid".

1	2	3	4	5	6	7	8
Technology option				V1.6	fp_mc_822_e.vsd	Function diagram	- 822 -
Reference point setting on the fly					09.01.02	MASTERDRIVES MC	

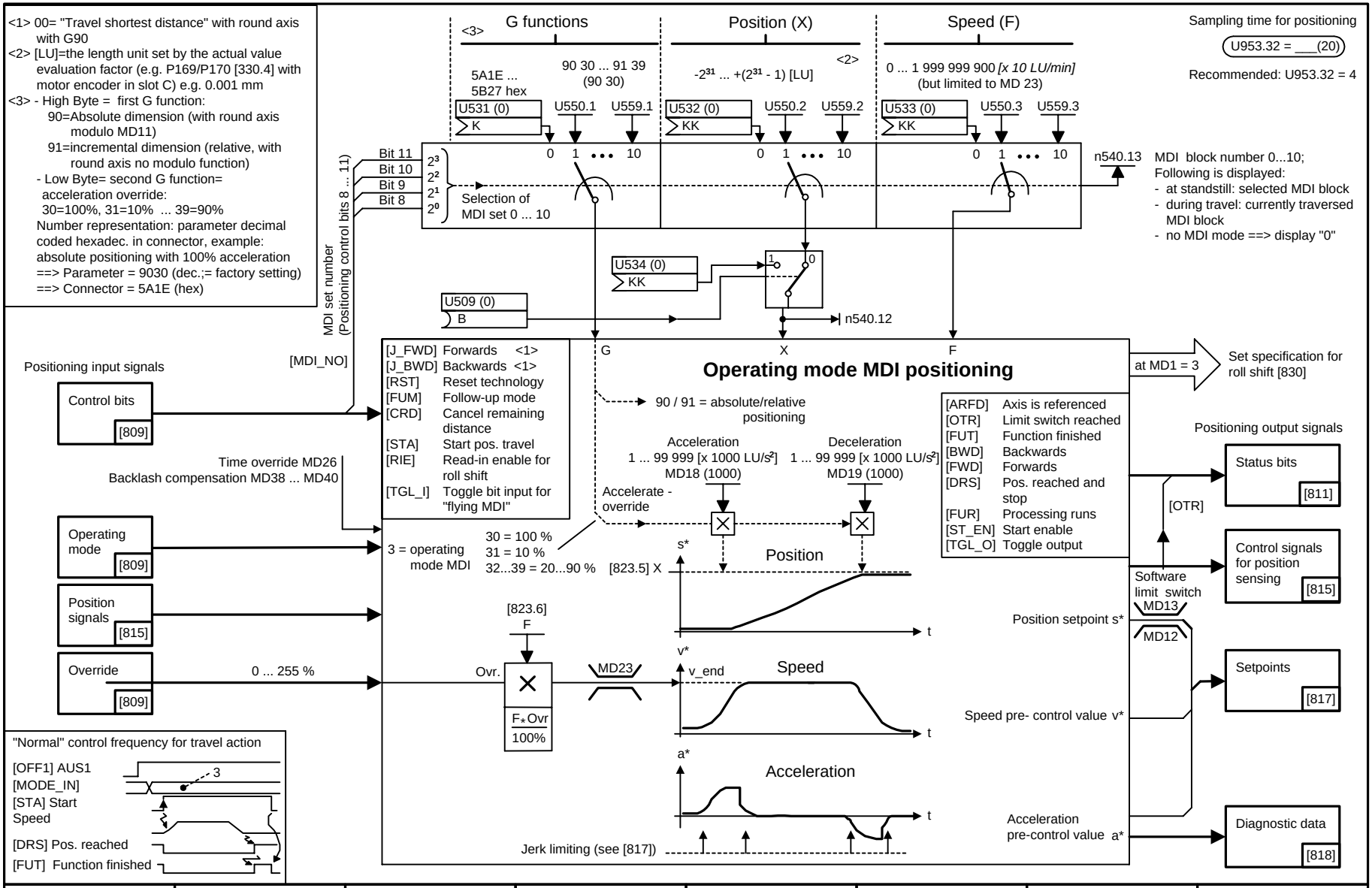

1	2	3	4	5	6	7	8
Technology option				V1.6	fp_mc_823_e.vsd	Function diagram	- 823 -
Operating mode MDI (point-to-point positioning)					08.01.02	MASTERDRIVES MC	

Sampling time for positioning

U953.32 = ___(20)

Recommended: U953.32=4

Control mode (speed-controlled jogging without limit-switch evaluation)

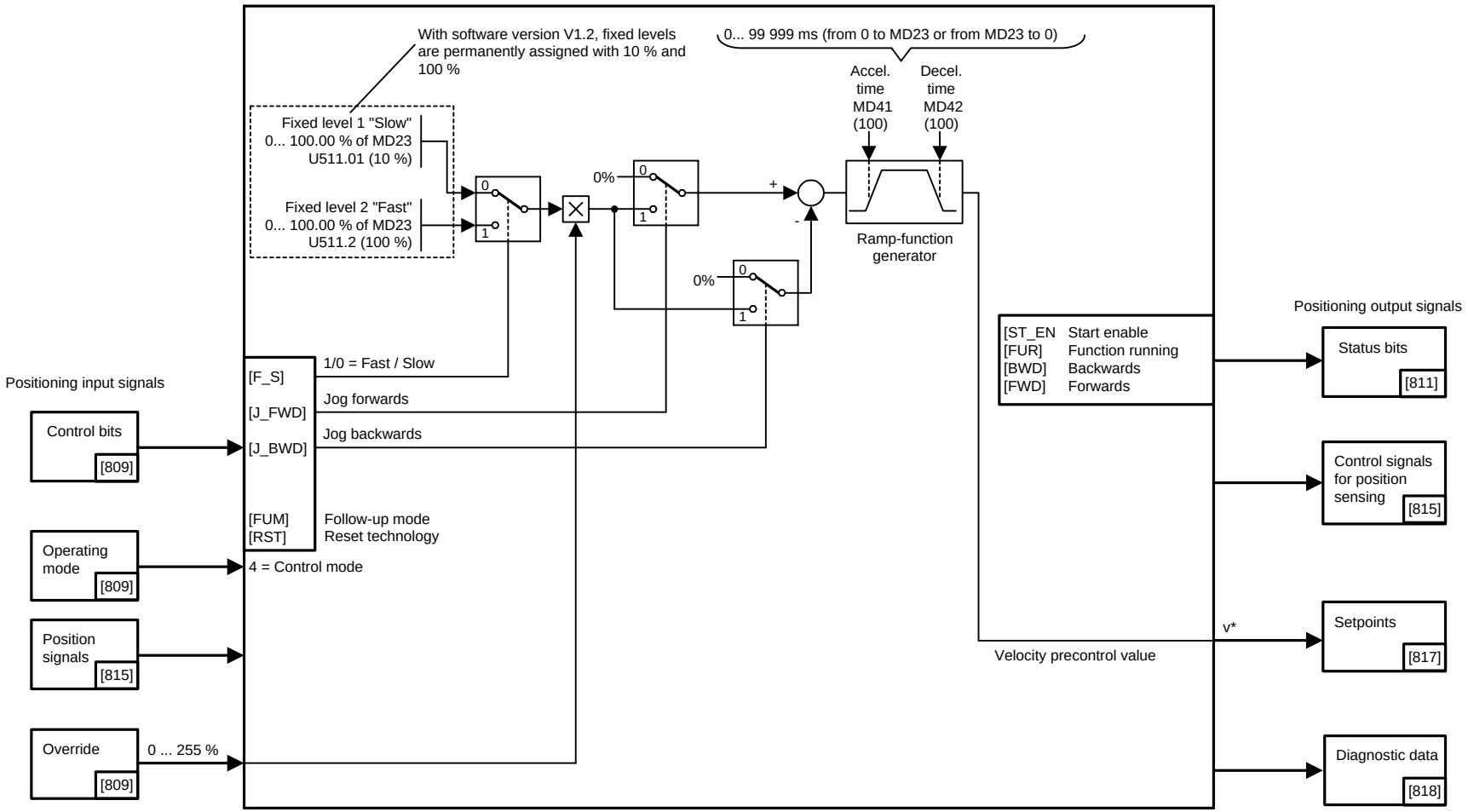

1	2	3	4	5	6	7	8
Technology option				V1.6	fp_mc_825_e.vsd	Function diagram	- 825 -
Control mode					08.01.02	MASTERDRIVES MC	

Automatic mode

Samping time for positioning

U953.32 = ___(20)

Recommended: U953.32=4

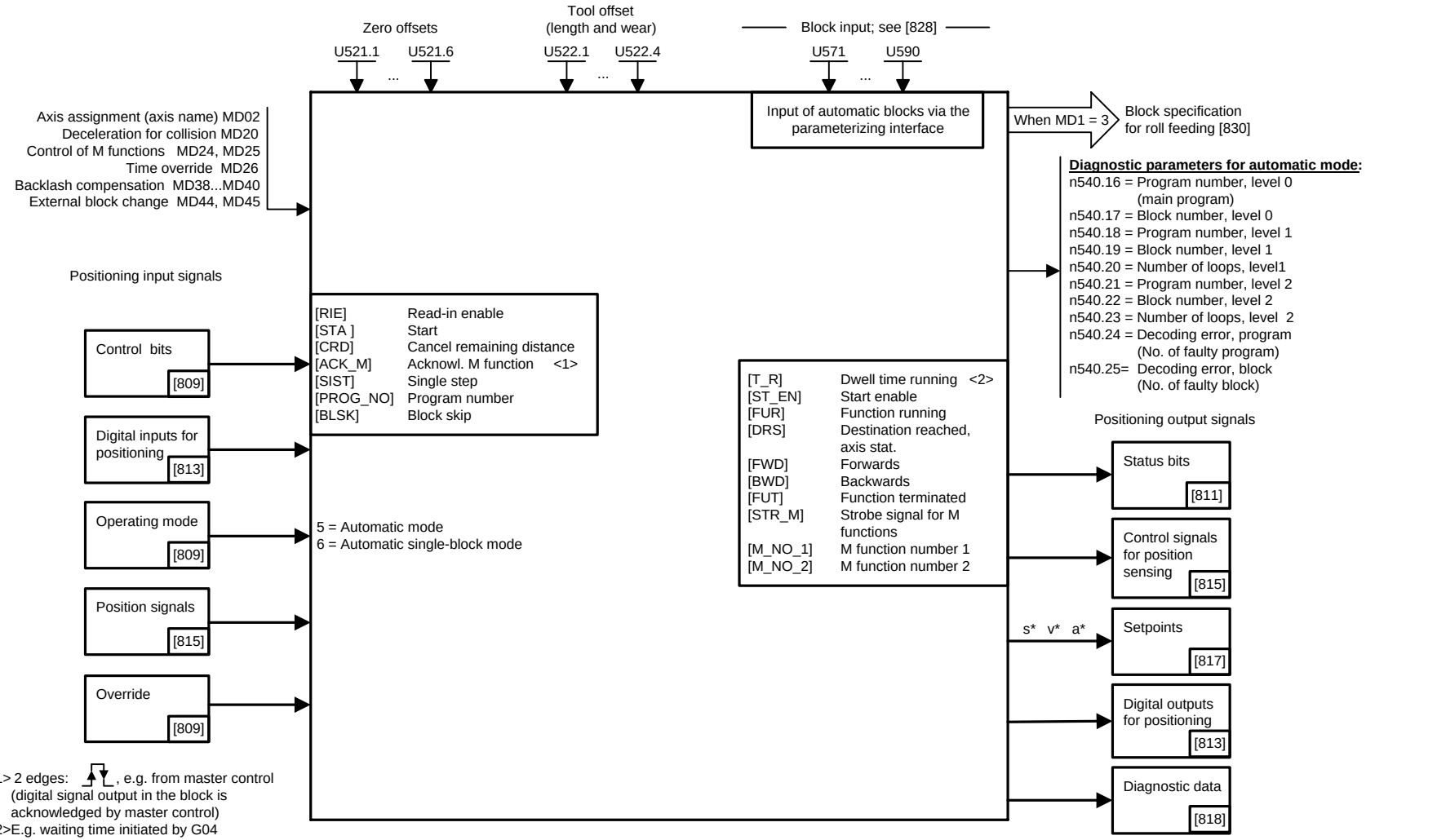

<1> 2 edges: , e.g. from master control (digital signal output in the block is acknowledged by master control)

<2>E.g. waiting time initiated by G04

1	2	3	4	5	6	7	8
Technology option				V1.6	fp_mc_826_e.vsd	Function diagram	- 826 -
Automatic positioning mode					08.01.02	MASTERDRIVES MC	

Entering and editing automatic NC programs by means of parameters U571... U590

Proceed as follows in order to enter or edit a block (see also parameter list):

Start block editing

Enter prorgram number:
U571: 1...20 = Program number
21 = Automatic individual block
255 = Delete all programs (continue with U590=2)

Enter block number:
U572.1: 0 = Do not skip block (normal case)
1= Skip block (special case)
U572.2: 1...200 = Block number
255 = Delete programs
(continue with U590=2 or 3)
U573: 0 = no block switch-through (last block)
1...19 = Block continuation number

Block is in editing buffer
The block is now in editing buffer for editing
(inspect, change, delete or new entry)
available in U574... U585

Edit block (see parameter list):
Index .01 respectively:0= Block segment does not exist.
1= Block segment exists
Index .02 respectively = Block segment
Edit G functions G1... G4:
by means of U574... U577
(e.g. Value 90 = G90= Absolute positioning)
Edit position:
by means of U578 (entry in [LU])
Edit traversing velocity (F):
by means of U579 (entry in [x 10 LU/min])
U579.01: 0= Traversing velocity not available
1= Line velocity "F"
2= Axis velocity "FN"
U579.02: Traversing velocity
Edit M functions 1... 3:
by means of U580... 582 (e.g. Value 18= M18= Infinite loop)
Edit D function (tool offset memory)
Edit D function (tool offset memory):
by means of U583
Edit subprogram number:
by means of U584 (range of values 1...20)
Edit number of loops:
by means of U585 (range of values 0...65535)

Perform program action with the block in the editing buffer:
U590 = 0 ==> Action ended / No action active
1 ==> Adopt block from editing buffer and store in EEPROM
<1> 2 ==> Delete all blocks in all programs (precondition: U571=255 and U572.2=255)
3 ==> Delete selected program (precondition: U571=No. of the program to be deleted and U572.2=255)
4 ==> Delete selected block
5 ==> Teach In (see also [819]

Wait for completion message:
If the program action has been completed, U590 automatically jumps back to "0"

Perform error check:
U591=0 ==> Program action has been carried out, no errors found
U591>0 ==> An error has occurred. A description of the error can be found in Appendix A of the manual "Motion Control for MASTERDRIVES MC and SIMATIC M7" under the "Technology error message", error number 2000+U591

End

Editing buffer
(in the RAM)
Max. 1 block

Automatic program memory
(in the EEPROM)
U720
U769
(for upread / download)

<1> It is not possible to delete all blocks in all programs in modes 5 and 6 (automatic and automatic individual block)

Note:
If you use the SIMATIC S7 standard software, GMC-BASIC, you should enter and edit automatic programs via the task interface provided.

Roll feeding (possible in MDI and automatic modes)

See Function description, Ch. 5.2.2

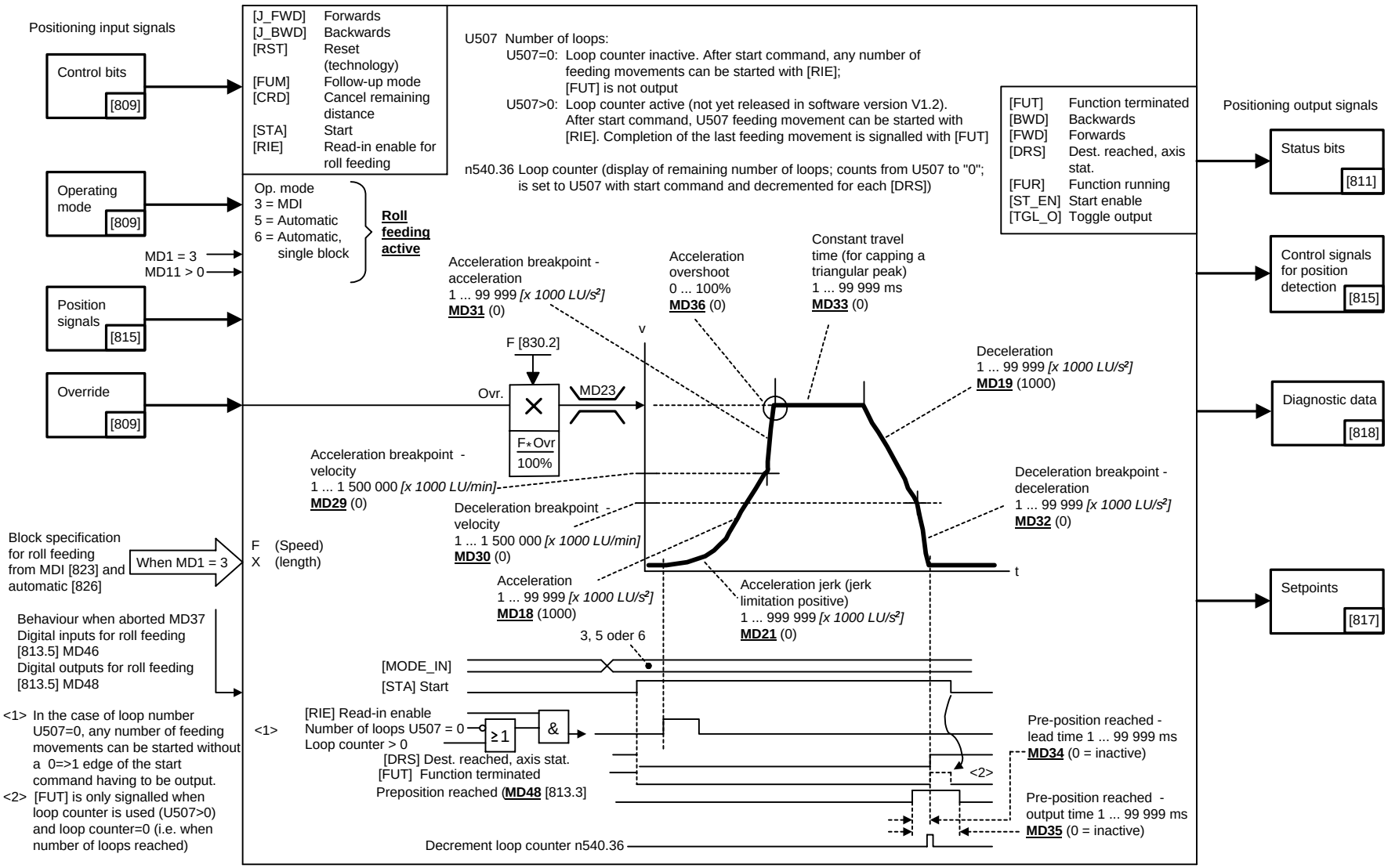

1	2	3	4	5	6	7	8
Technology option				V1.6	fp_mc_830_e.vsd	Function diagram	- 830 -
Roll feeding					08.01.02	MASTERDRIVES MC	

Synchronism operating mode

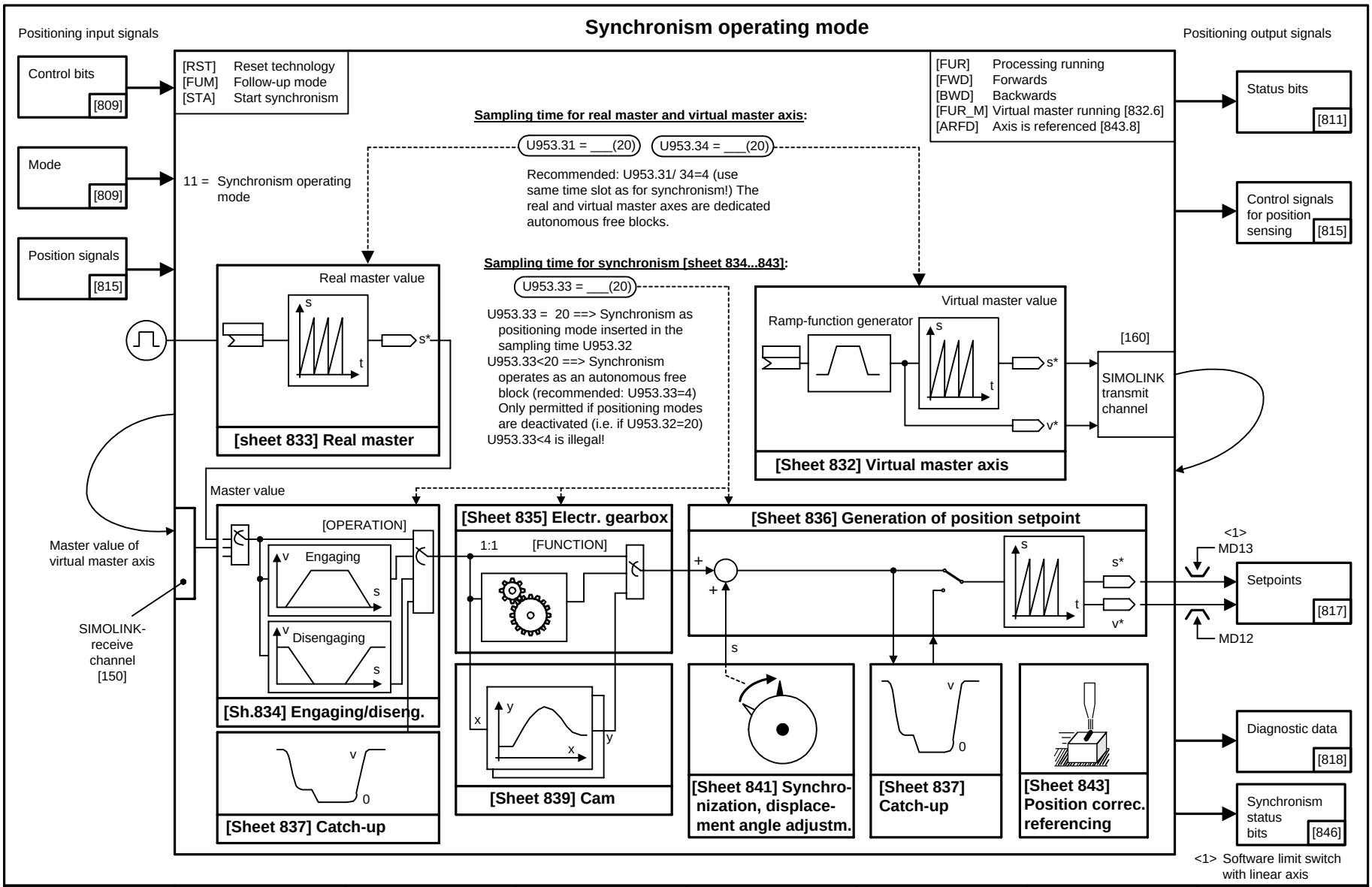

1	2	3	4	5	6	7	8
Technology option				V1.6	fp_mc_831_e.vsd	Function diagram	- 831 -
Synchronism operating mode (overview)					08.01.02	MASTERDRIVES MC	

Virtual master axis

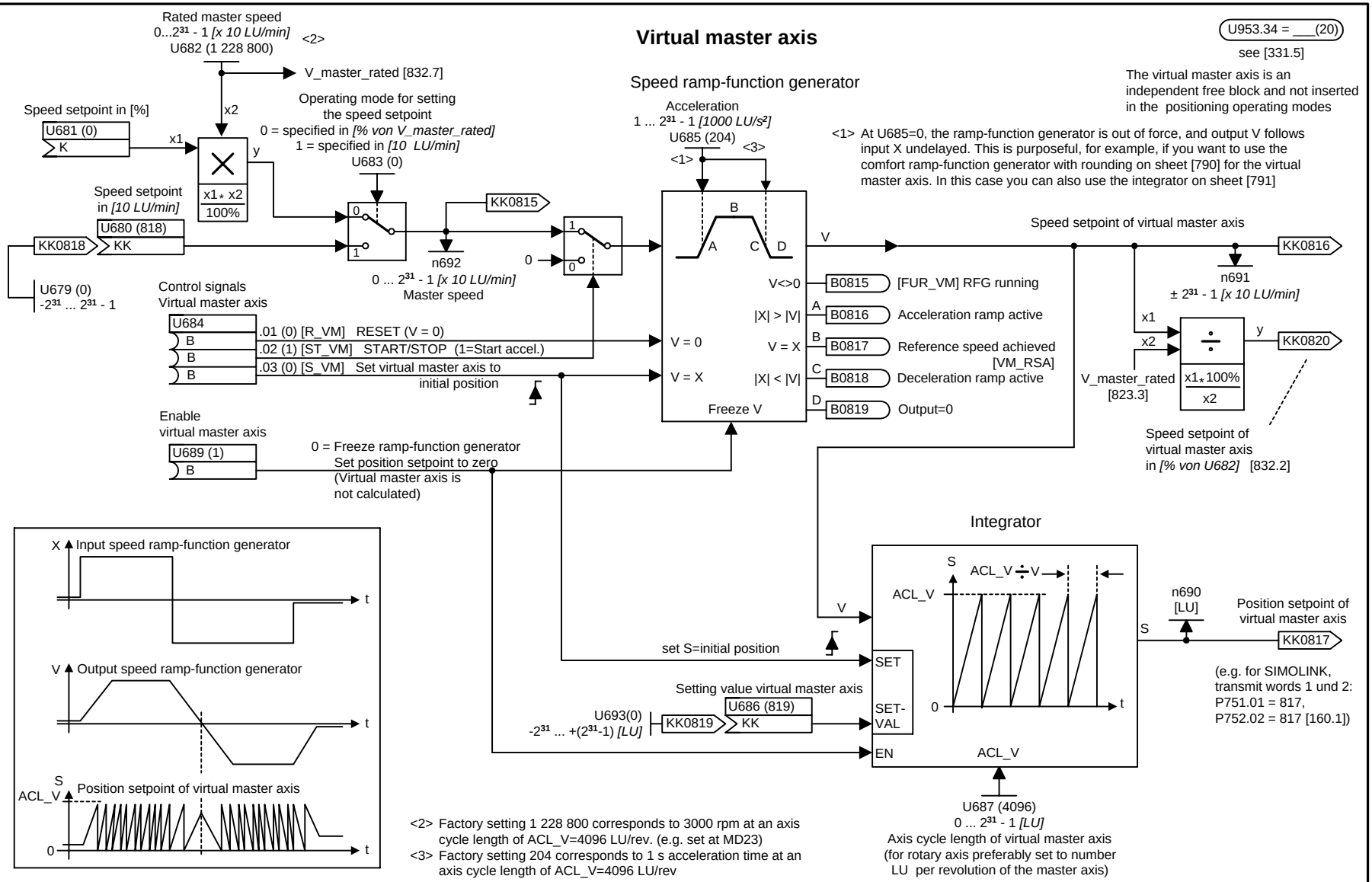

<2> Factory setting 1 228 800 corresponds to 3000 rpm at an axis cycle length of ACL_V=4096 LU/rev. (e.g. set at MD23)
<3> Factory setting 204 corresponds to 1 s acceleration time at an axis cycle length of ACL_V=4096 LU/rev

U953.31 = ___(20)

Should be calculated in the same time slot as the synchronization block.

Real master with speed-dependent deadtime compensation (introduced with V1.3)

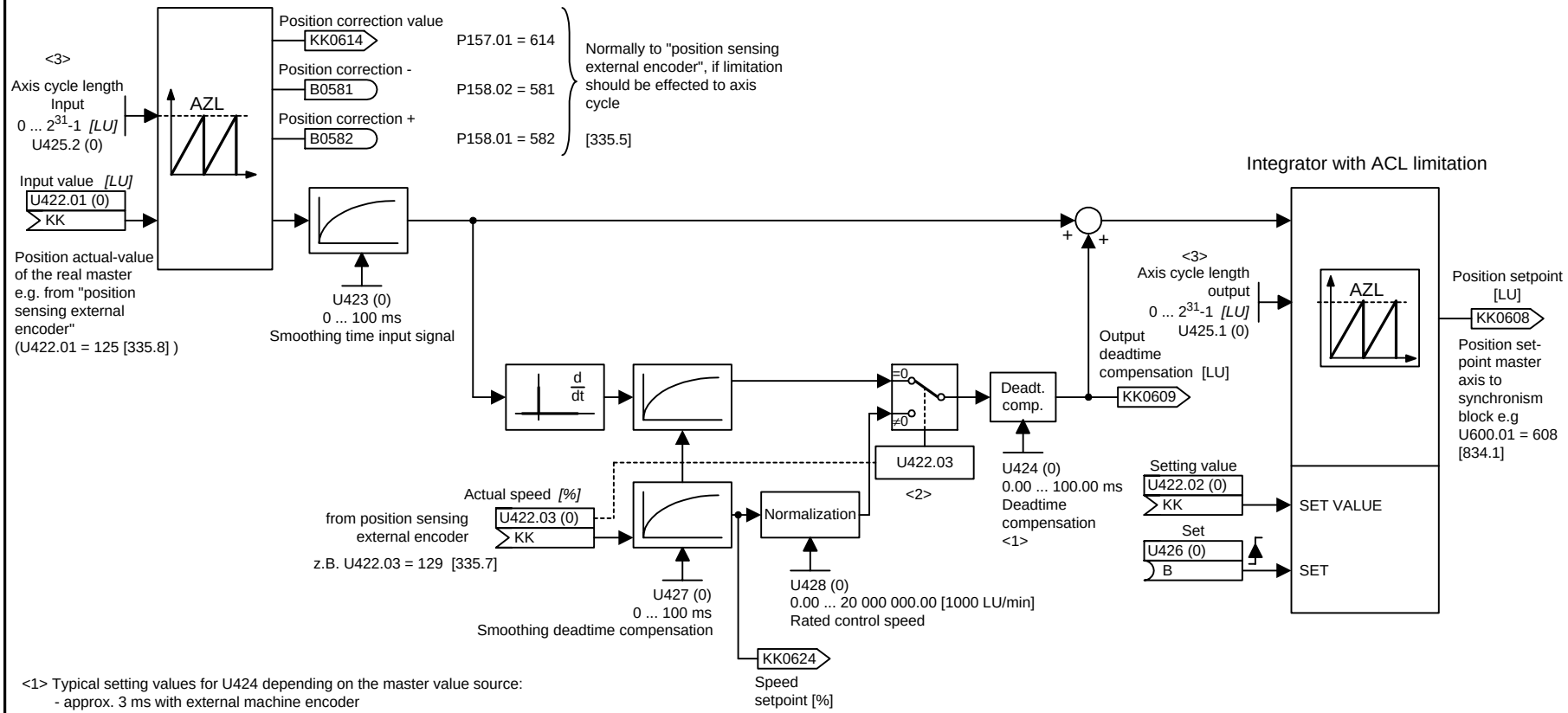

<1> Typical setting values for U424 depending on the master value source:
- approx. 3 ms with external machine encoder
- approx. 6 ms with motor encoder
- approx. 10 ms if input value is coming from SIMOLINK

<2> It is recommended to use the measured actual speed if possible (U422.03>0)

<3> You can normally set the axis cycle lengths U425.1 and U425.2 to the same value.

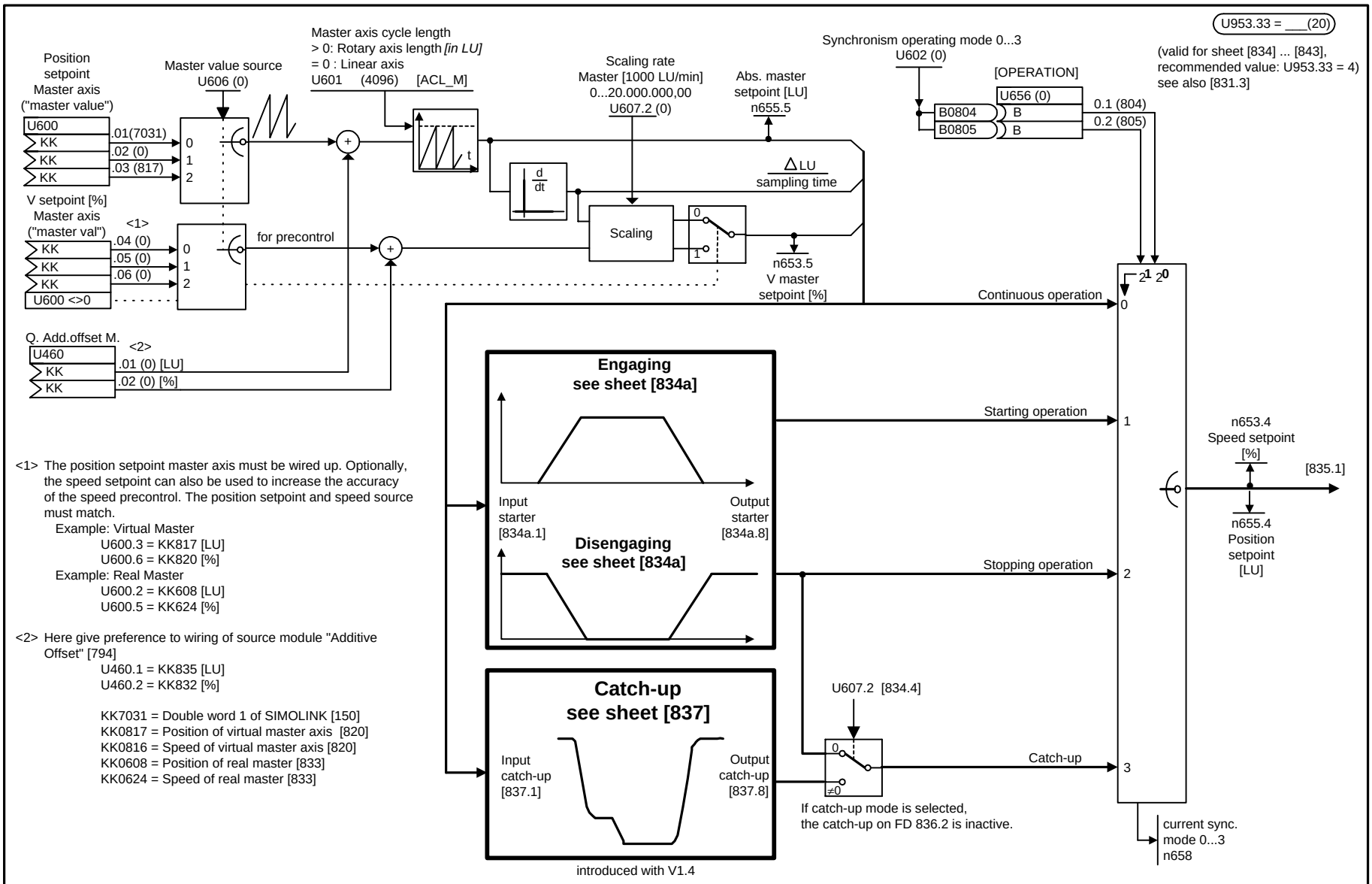

1	2	3	4	5	6	7	8
Technology Option				V1.6	fp_mc_834_e.vsd	Function diagram	- 834 -
Synchronism - engaging/disengaging actions catch-up					08.01.02	MASTERDRIVES MC	

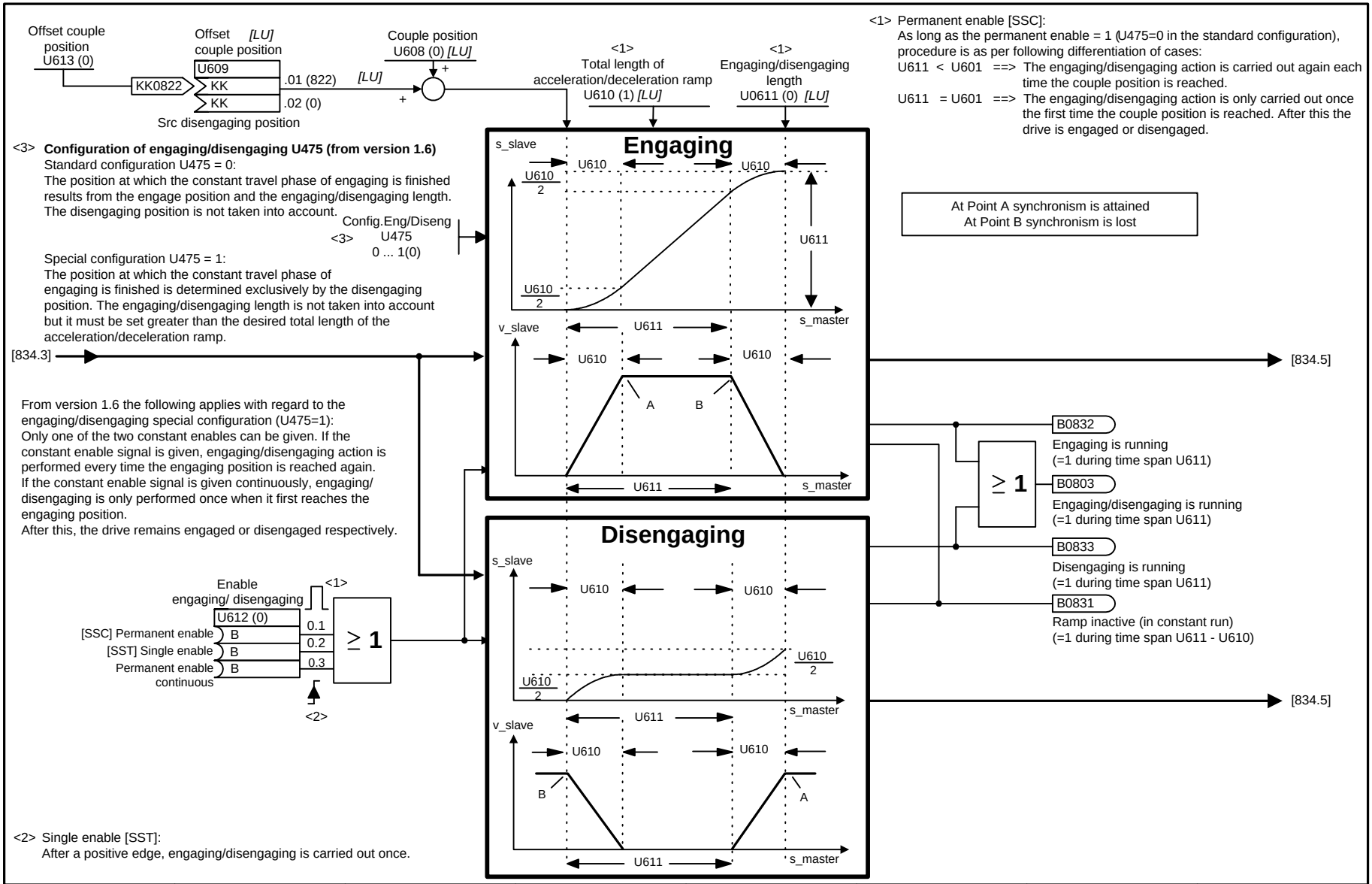

1	2	3	4	5	6	7	8
Technology option				V1.6	fp_mc_834a_e.vsd	Function diagram	- 834a -
Synchronism - engaging/disengaging actions catch-up					26.10.01	MASTERDRIVES MC	

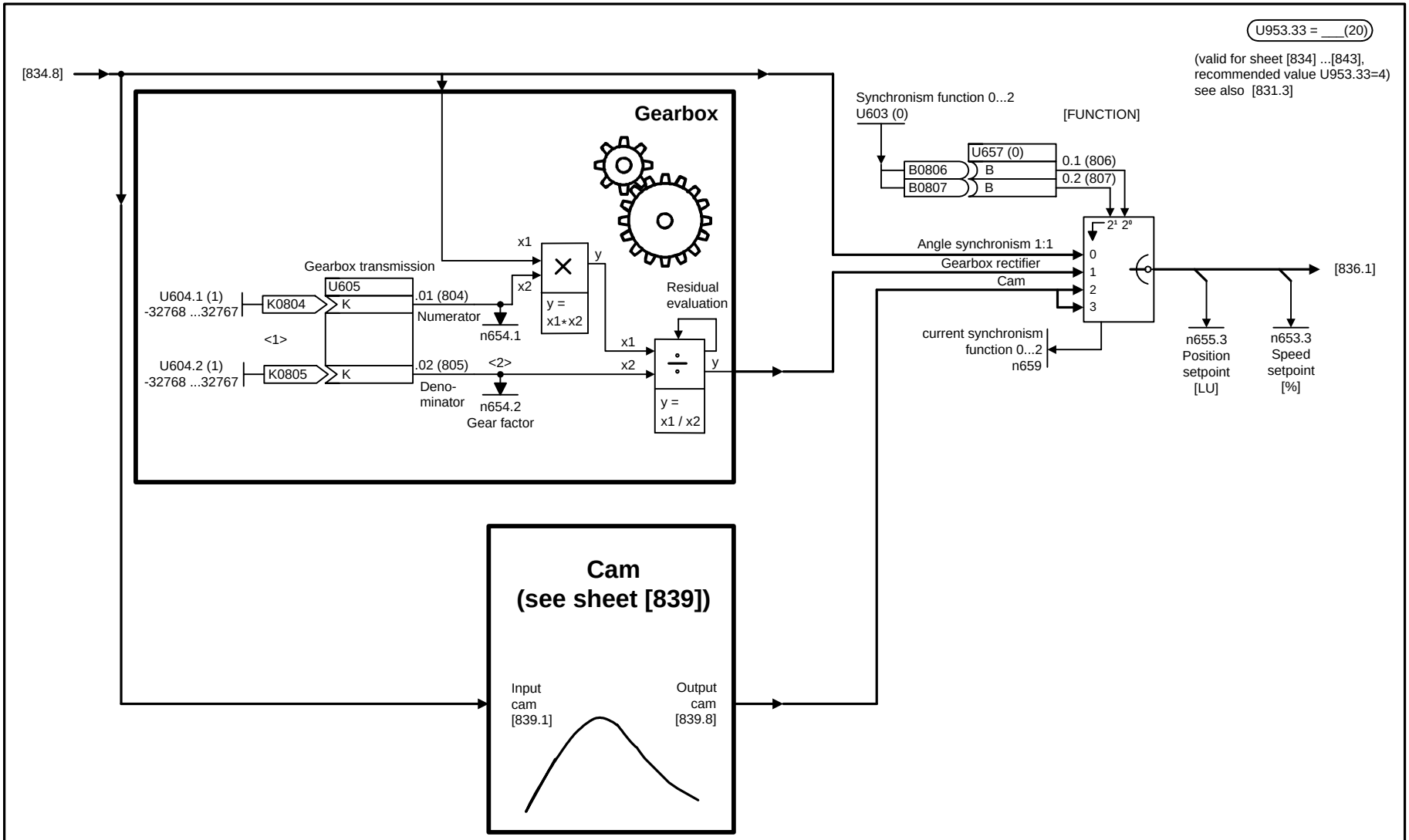

<1> Numerator/denominator < 1 => Slave travels slower than master
Numerator/denominator negative => Slave travels different sense of rotation to master
<2> Denominator = 0 => denominator = 1

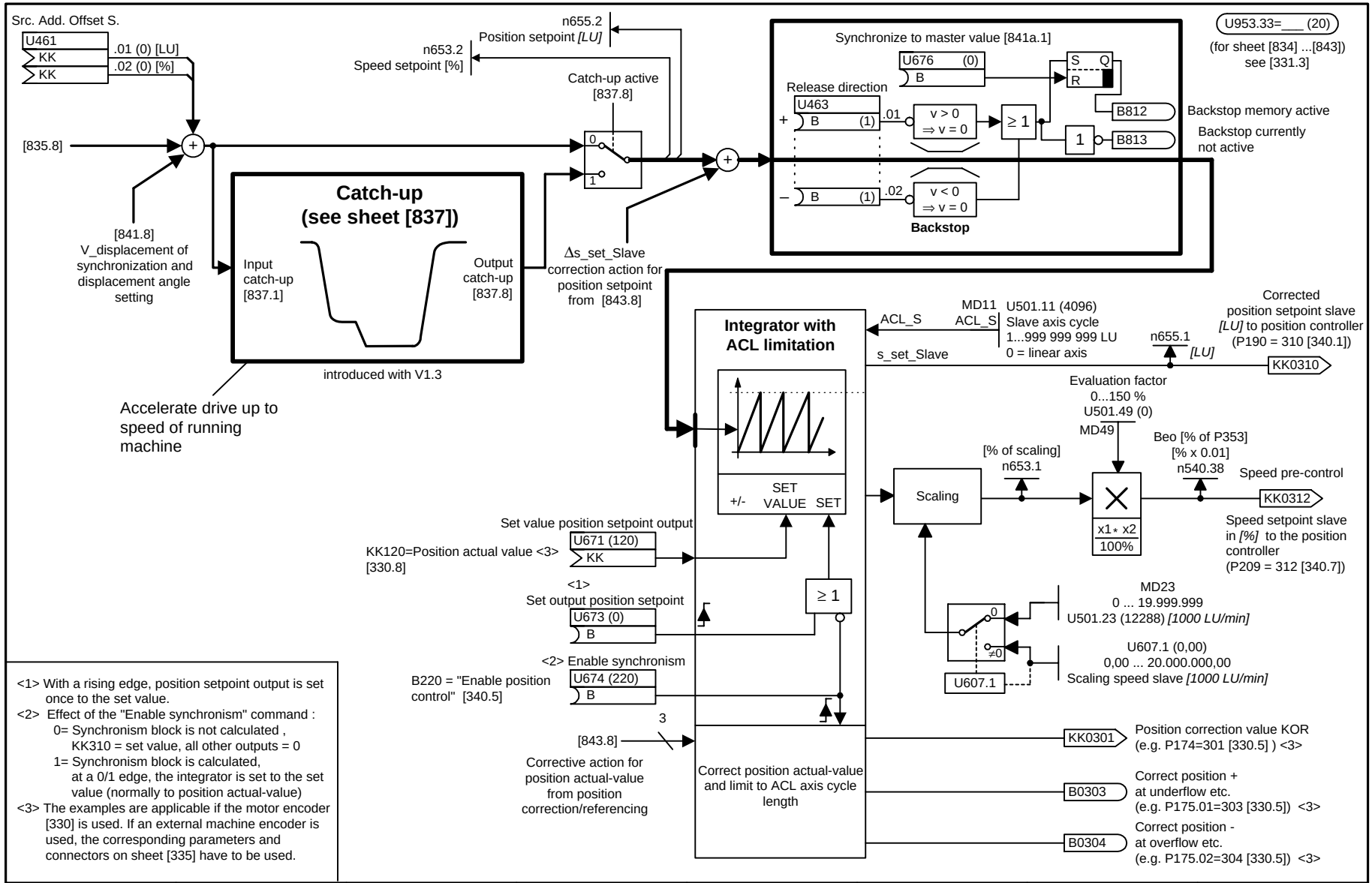

<1> With a rising edge, position setpoint output is set once to the set value.
<2> Effect of the "Enable synchronism" command :
0= Synchronism block is not calculated , KK310 = set value, all other outputs = 0
1= Synchronism block is calculated, at a 0/1 edge, the integrator is set to the set value (normally to position actual-value)
<3> The examples are applicable if the motor encoder [330] is used. If an external machine encoder is used, the corresponding parameters and connectors on sheet [335] have to be used.

1	2	3	4	5	6	7	8
Technology option				V1.6	fp_mc_836_e.vsd	Function diagram	- 836 -
Synchronism - generation of position setpoint					03.09.01	MASTERDRIVES MC	

<1> The axis is first traveled at "catch-up setpoint speed" until the halt position in the required direction of rotation can be approached.
If the position is to be reached in the forward direction, a positive speed setpoint must be input.
If the position is to be reached in the reverse direction, a negative speed setpoint must be input.
<2> with intermediate approach of setpoint speed
<3> without intermediate approach of setpoint speed
<4> After completion of catch-up, the angular synchronism must be explicitly established, e.g. by linking the message "Catch-up finished" with the command "Synchronize master value" (U676=820 [841.2])
<5> Mode: 1= With ramp-up/ramp-down
0 = Without ramp-up/ramp-down

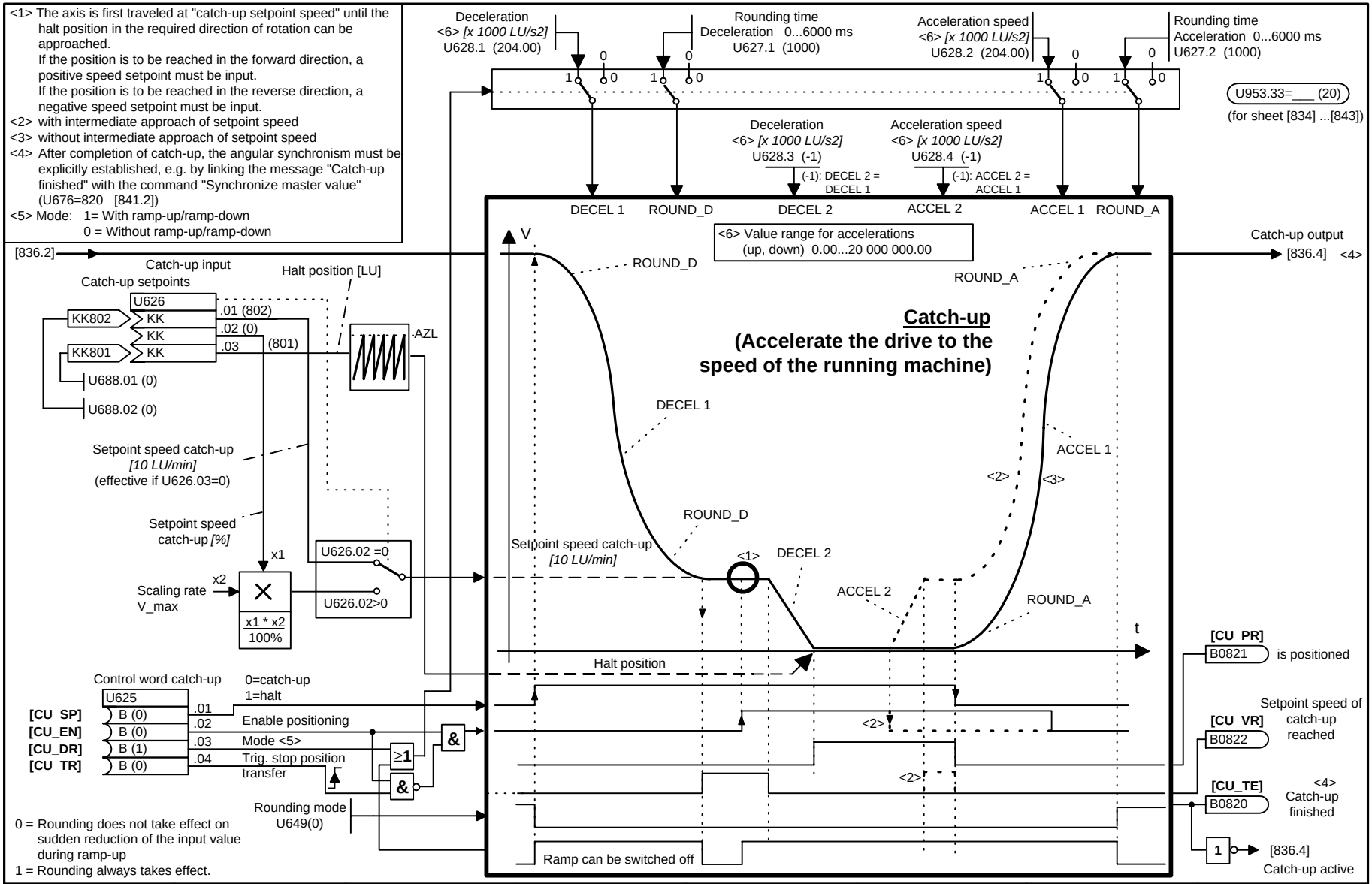

1	2	3	4	5	6	7	8
Technology option				V1.6	fp_mc_837_e.vsd	Function diagram	- 837 -
Synchronism - catch-up					08.01.02	MASTERDRIVES MC	

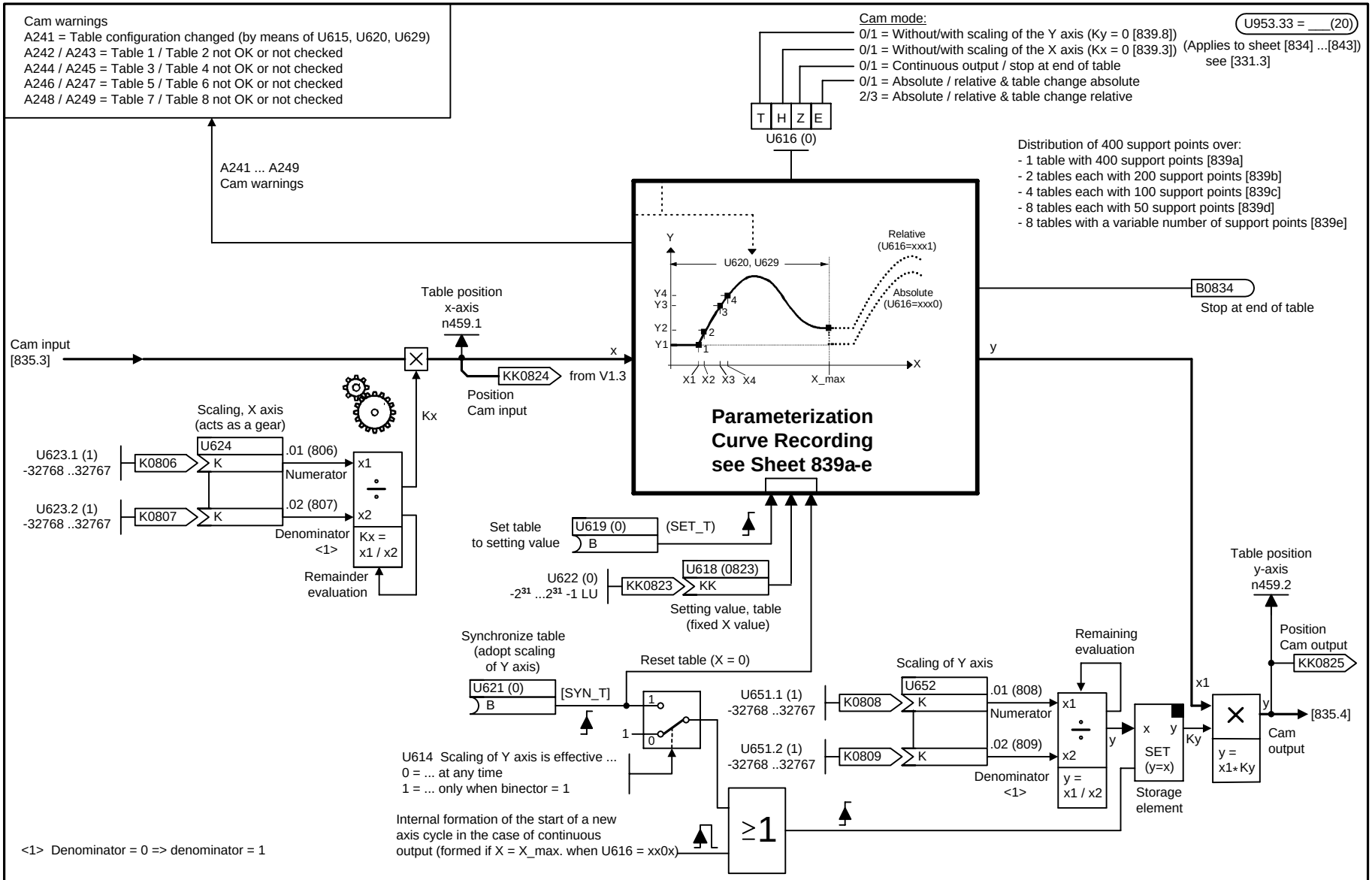

1	2	3	4	5	6	7	8
Technology option				V1.6	fp_mc_839_e.vsd	Function diagram	- 839 -
Mode of Operation Synchronism - Cam					24.10.01	MASTERDRIVES MC	

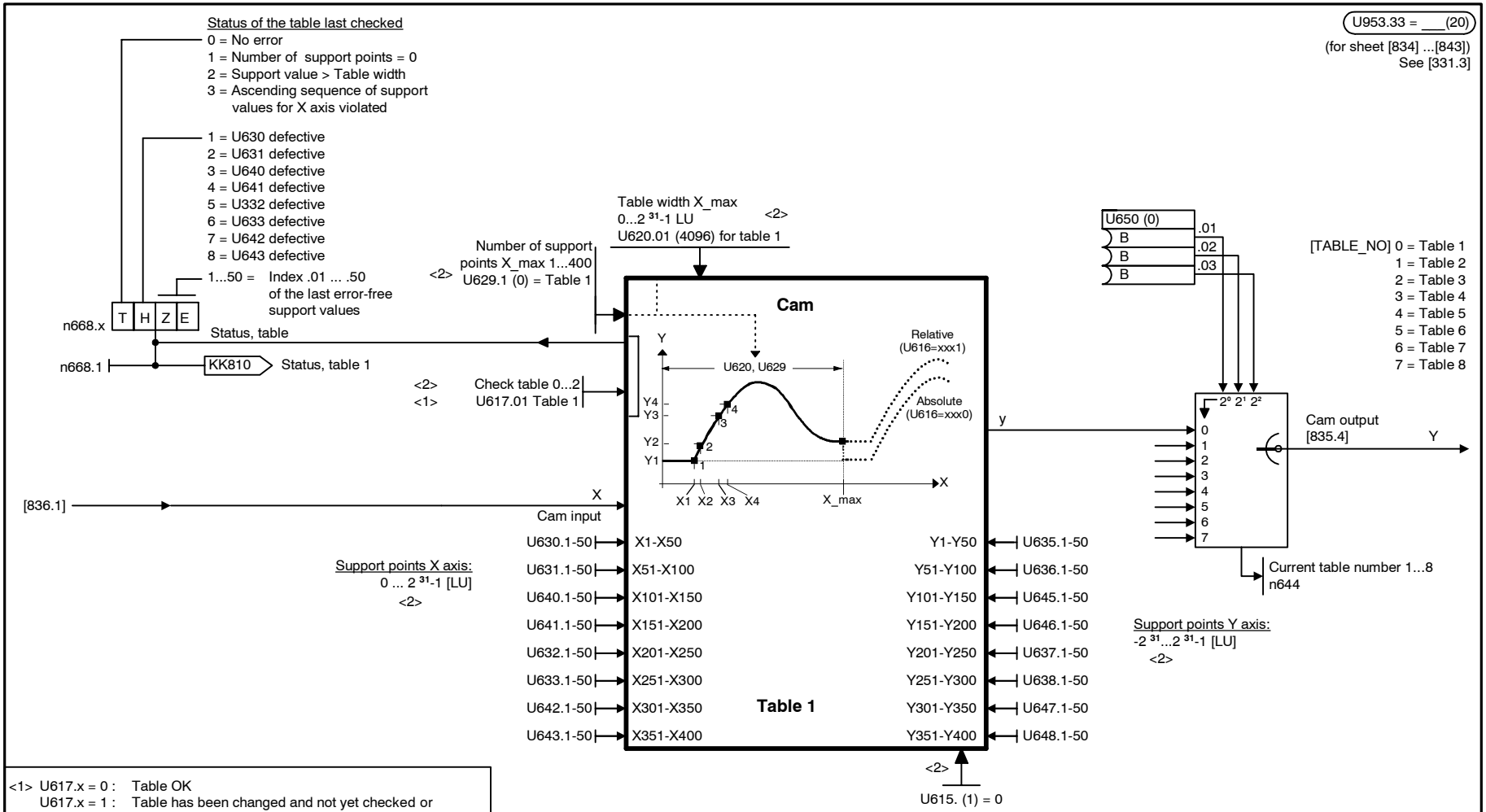

1	2	3	4	5	6	7	8
Technology option				V1.6	fp_mc_839a_e.vsd	Function diagram	- 839a -
Mode of Operation Synchronism - Cam 1 table with 400 points					08.01.02	MASTERDRIVES MC	

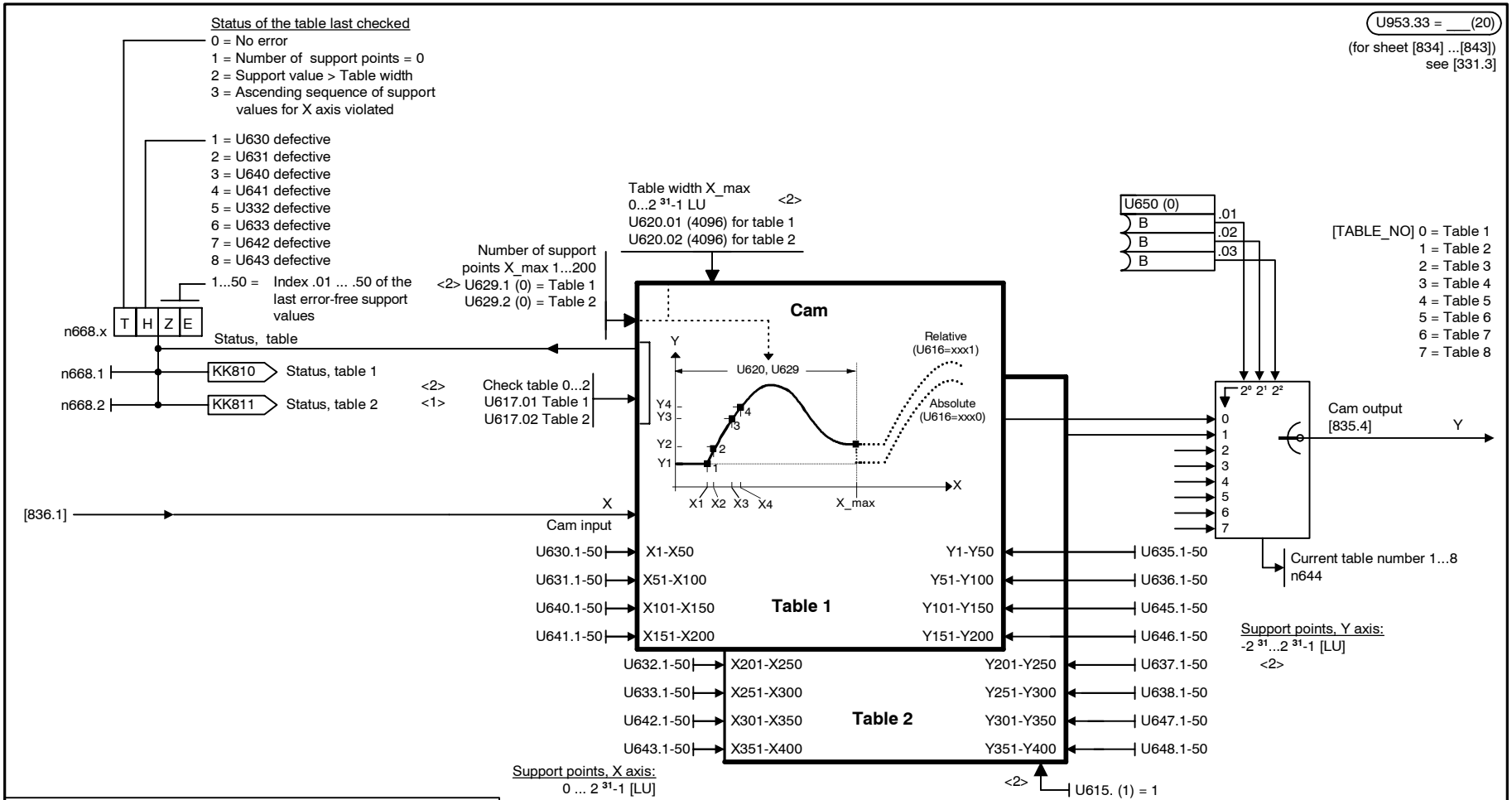

1	2	3	4	5	6	7	8
Technology option				V1.6	fp_mc_839b_e.vsd	Function diagram	- 839b-
Mode of Operation Synchronism - Cam 2 tables with 200 points each					08.01.02	MASTERDRIVES MC	

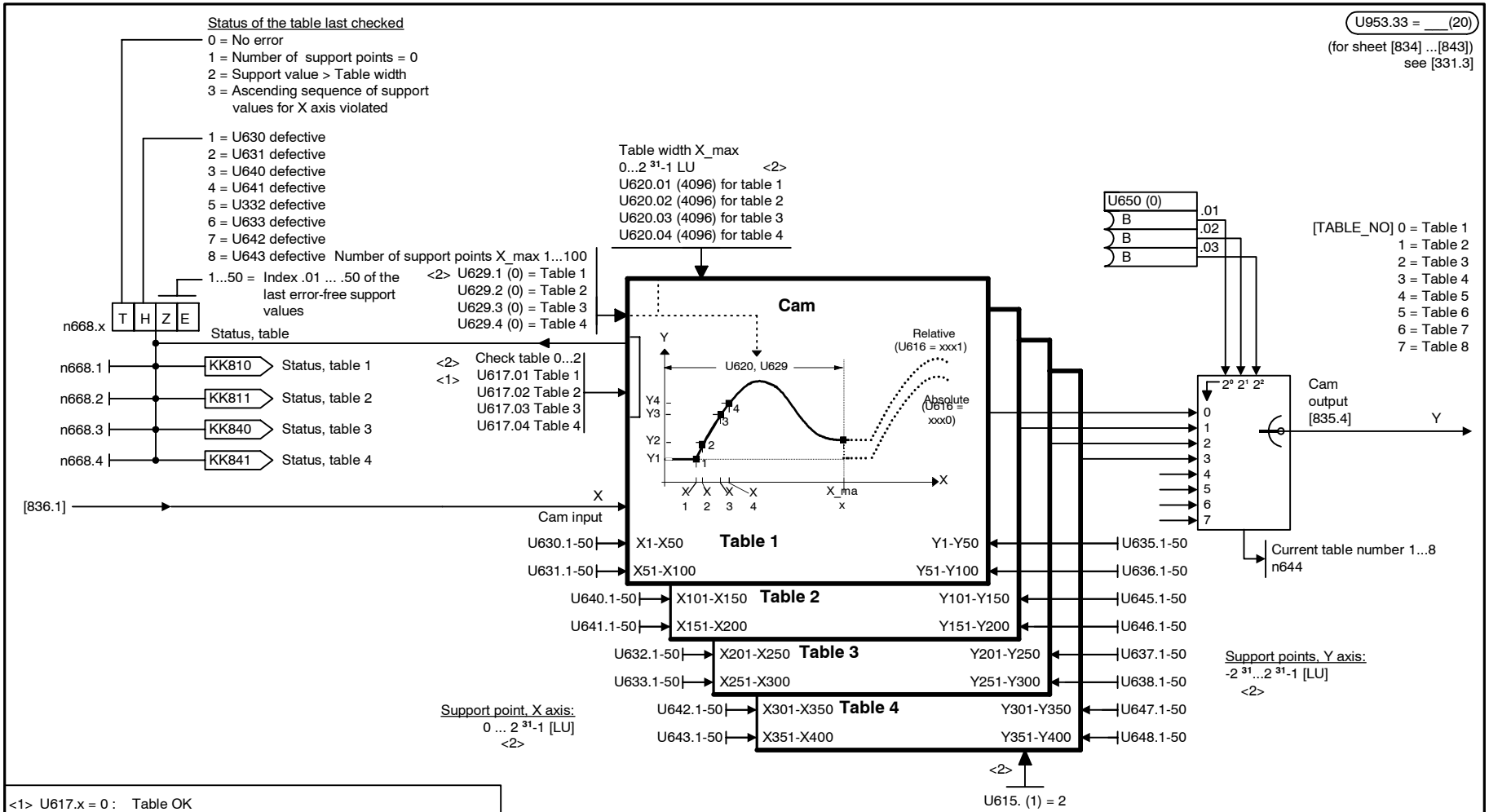

<1> U617.x = 0 : Table OK
U617.x = 1 : Table has been changed and not yet checked or the check found an error (error status in n668.x)
U617.x = 2 : Check command for table; if the table is OK, the value "0" is automatically entered in U617 as an acknowledgement; if the table is not OK, U617 jumps back to the value "1"
U617.x =10: Table not present
<2> Can only be changed when curve cam is not selected

Table configuration
0 = One table with 400 points (Table 1 {X1-X400})
1 = Two tables with 200 points each (Tables 1 {X1-X200} and 2 {X201-X400})
2 = Four tables with 100 points each (Tables 1, 2, 3, and 4)
3 = Eight tables with 50 points each (Tables 1 ... 8)
4 = Variable with up to 8 tables with a total of 400 support points

1	2	3	4	5	6	7	8
Technology option				V1.6	fp_mc_839c_e.vsd	Function diagram	- 839c -
Mode of Operation Synchronism - Cam 4 tables with 100 points each					08.01.02	MASTERDRIVES MC	

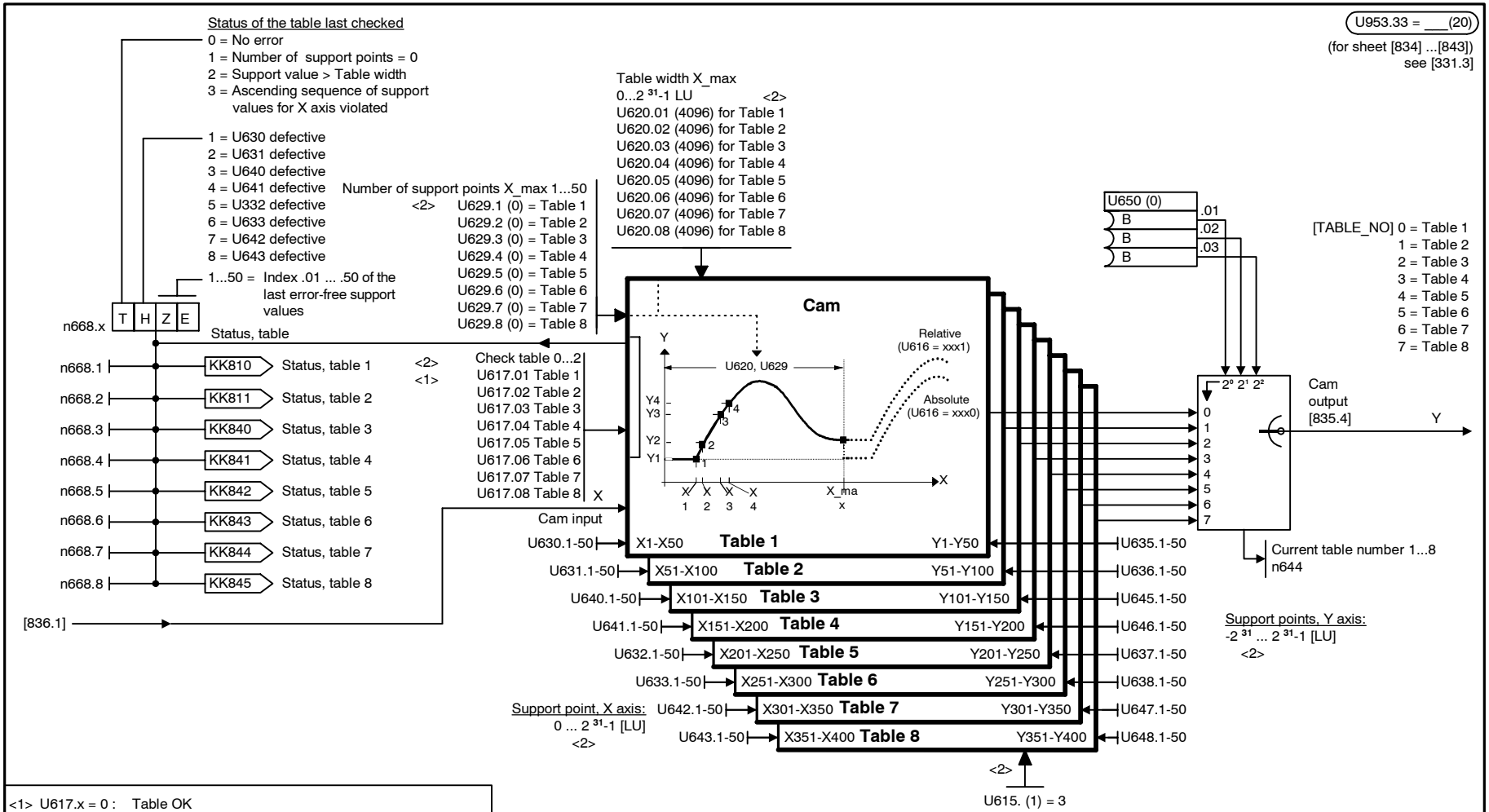

<1> U617.x = 0 : Table OK
U617.x = 1 : Table has been changed and not yet checked or the check found an error (error status in n668.x)
U617.x = 2 : Check command for table; if the table is OK, the value "0" is automatically entered in U617as an acknowledgement; if the table is not OK, U617 jumps back to the value "1"
U617.x =10: Table not present
<2> Can only be changed when curve cam is not selected

Table configuration
0 = One table with 400 points (Table 1 {X1-X400})
1 = Two tables with 200 points each (Tables 1 {X1-X200} and 2 {X201-X400})
2 = Four tables with 100 points each (Tables 1, 2, 3, and 4)
3 = Eight tables with 50 points each (Tables 1 ... 8)
4 = Variable with up to 8 tables with a total of 400 support values

1	2	3	4	5	6	7	8
Technology option				V1.6	fp_mc_839d_e.vsd	Function diagram	- 839d -
Mode of Operation Synchronism - Cam 8 tables with 50 points each					08.01.02	MASTERDRIVES MC	

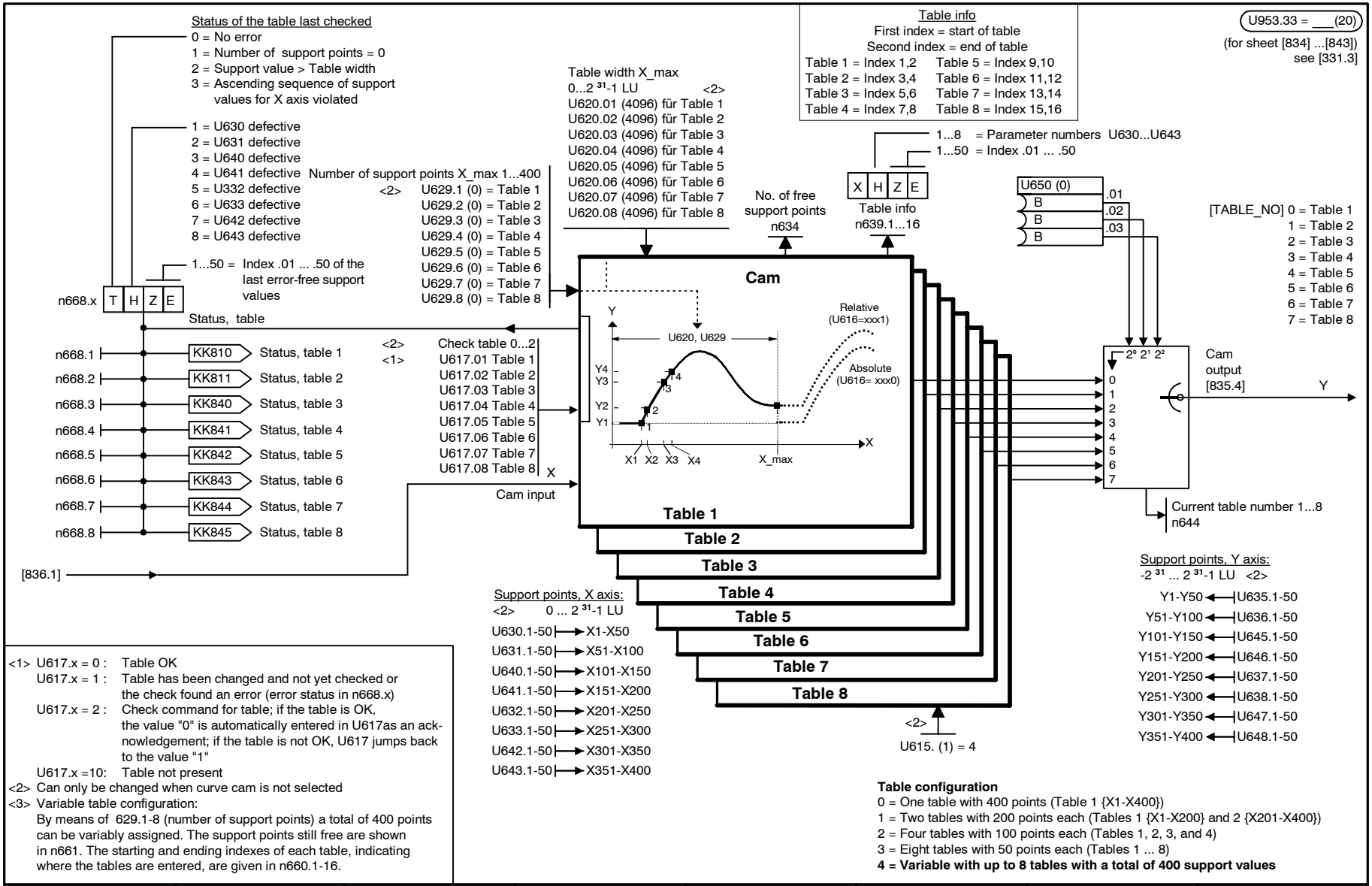

<1> U617.x = 0 : Table OK
U617.x = 1 : Table has been changed and not yet checked or the check found an error (error status in n668.x)
U617.x = 2 : Check command for table; if the table is OK, the value "0" is automatically entered in U617as an acknowledgement; if the table is not OK, U617 jumps back to the value "1"
U617.x =10: Table not present
<2> Can only be changed when curve cam is not selected
<3> Variable table configuration:
By means of 629.1-8 (number of support points) a total of 400 points can be variably assigned. The support points still free are shown in n661. The starting and ending indexes of each table, indicating where the tables are entered, are given in n660.1-16.

Table configuration
0 = One table with 400 points (Table 1 {X1-X400})
1 = Two tables with 200 points each (Tables 1 {X1-X200} and 2 {X201-X400})
2 = Four tables with 100 points each (Tables 1, 2, 3, and 4)
3 = Eight tables with 50 points each (Tables 1 ... 8)
4 = Variable with up to 8 tables with a total of 400 support values

1	2	3	4	5	6	7	8
Technology option				V1.6	fp_mc_839e_e.vsd	Function diagram	**- 839e -**
Mode of Operation Synchronism - Cam with max. 8 tables in variable configurations					08.01.02	MASTERDRIVES MC	

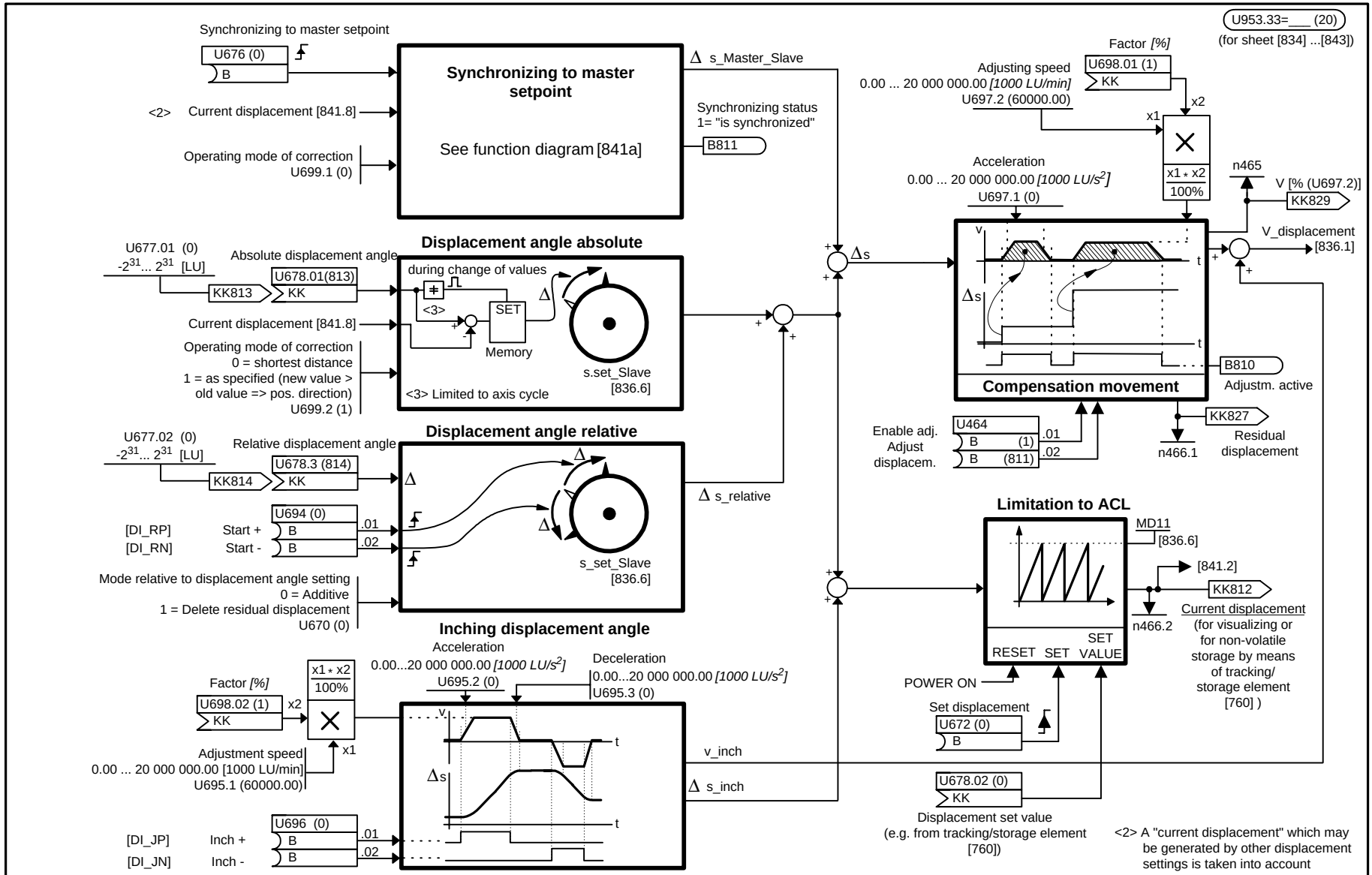

1	2	3	4	5	6	7	8
Technology option				V1.6	fp_mc_841_e.vsd	Function diagram	- 841 -
Synchronism - Synchronization, displacement angle setting (introduced with V1.3)					08.01.02	MASTERDRIVES MC	

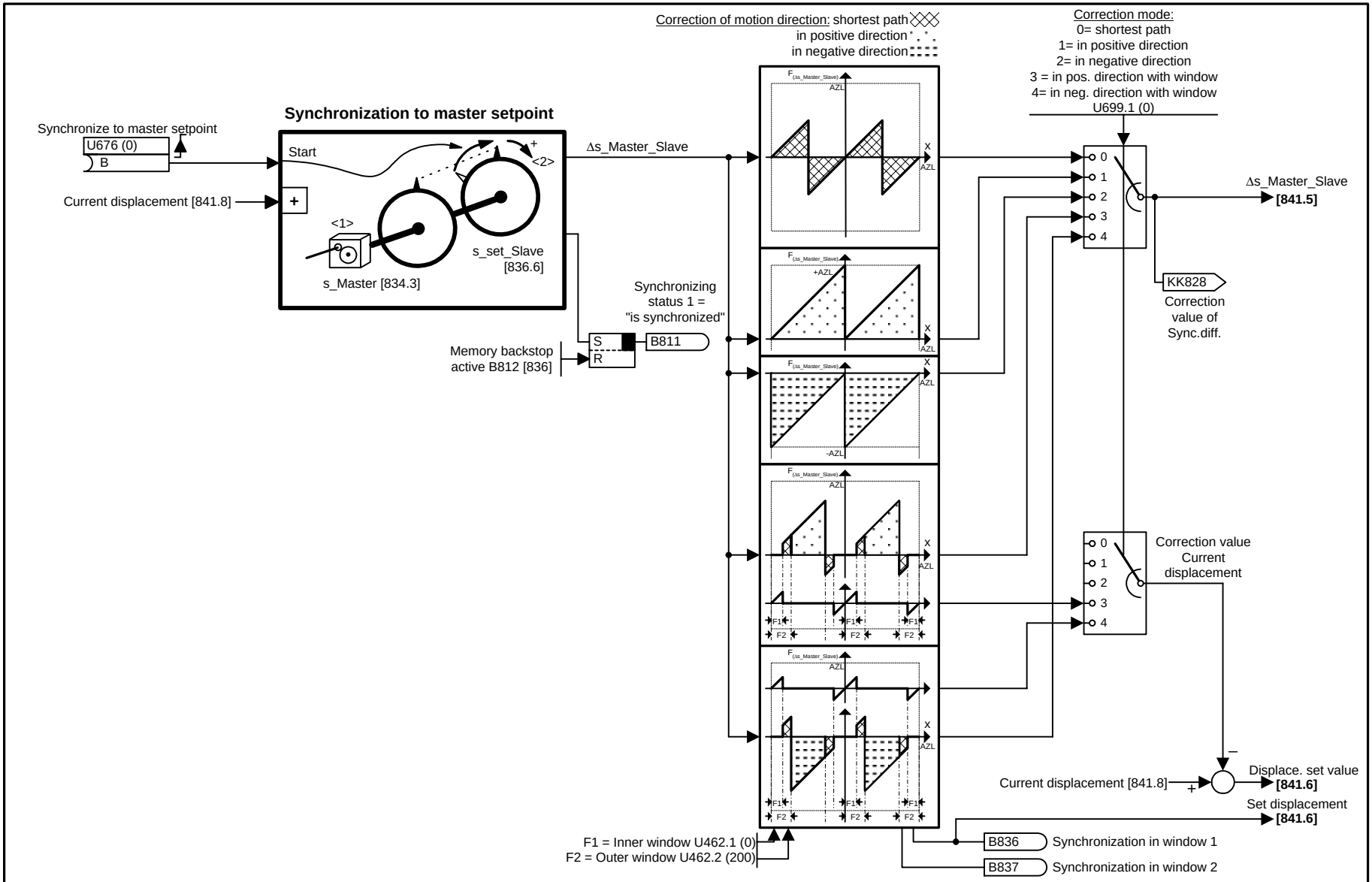

1	2	3	4	5	6	7	8
Technology option				V1.6	fp_mc_841a_e.vsd	Function diagram	- 841a-
Synchronization with window / Synchronism - Synchronization					08.01.02	MASTERDRIVES MC	

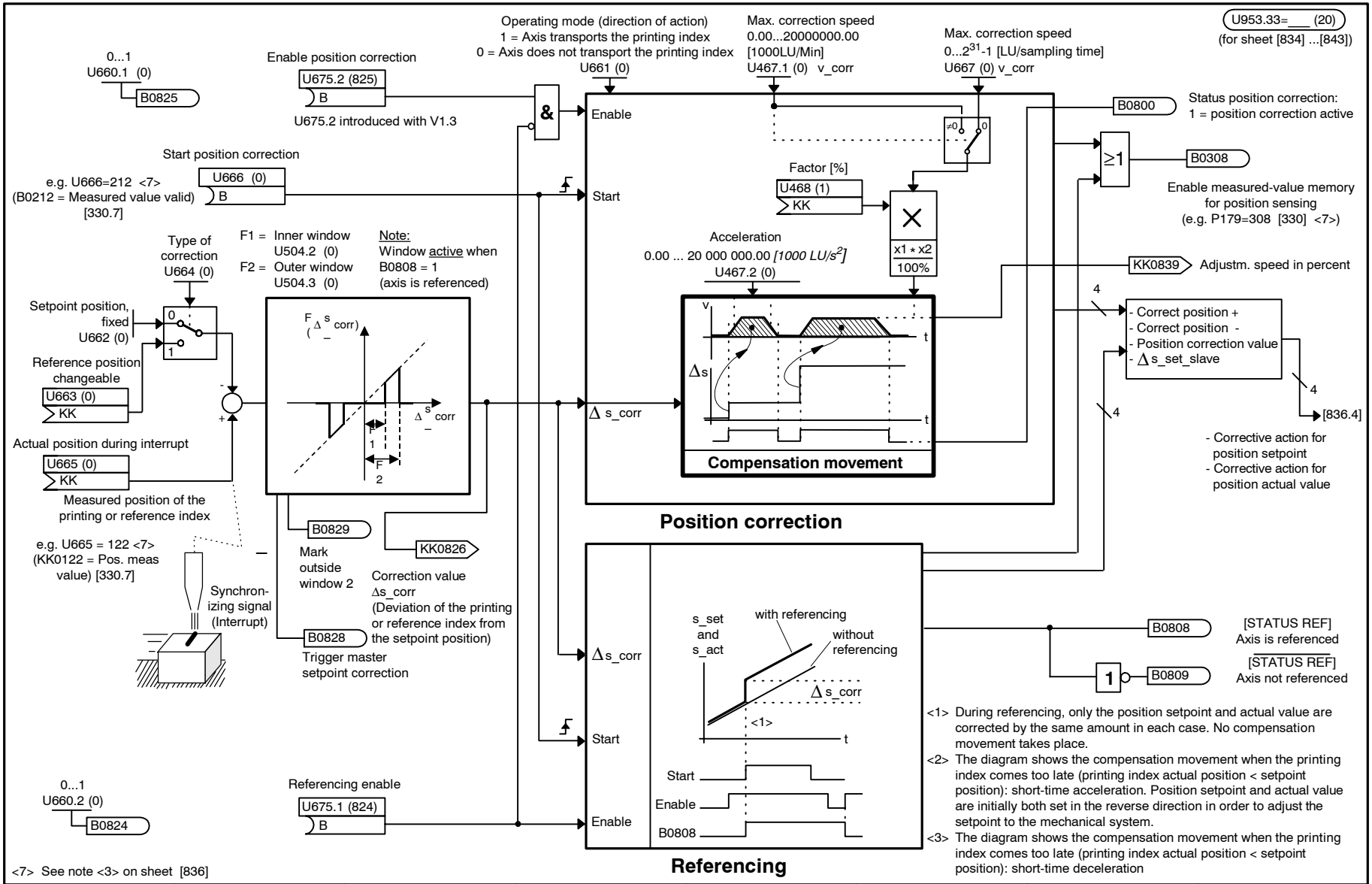

1	2	3	4	5	6	7	8
Technology option				V1.6	fp_mc_843_e.vsd	Function diagram	- 843 -
Synchronism - position correction, referencing					09.01.02	MASTERDRIVES MC	

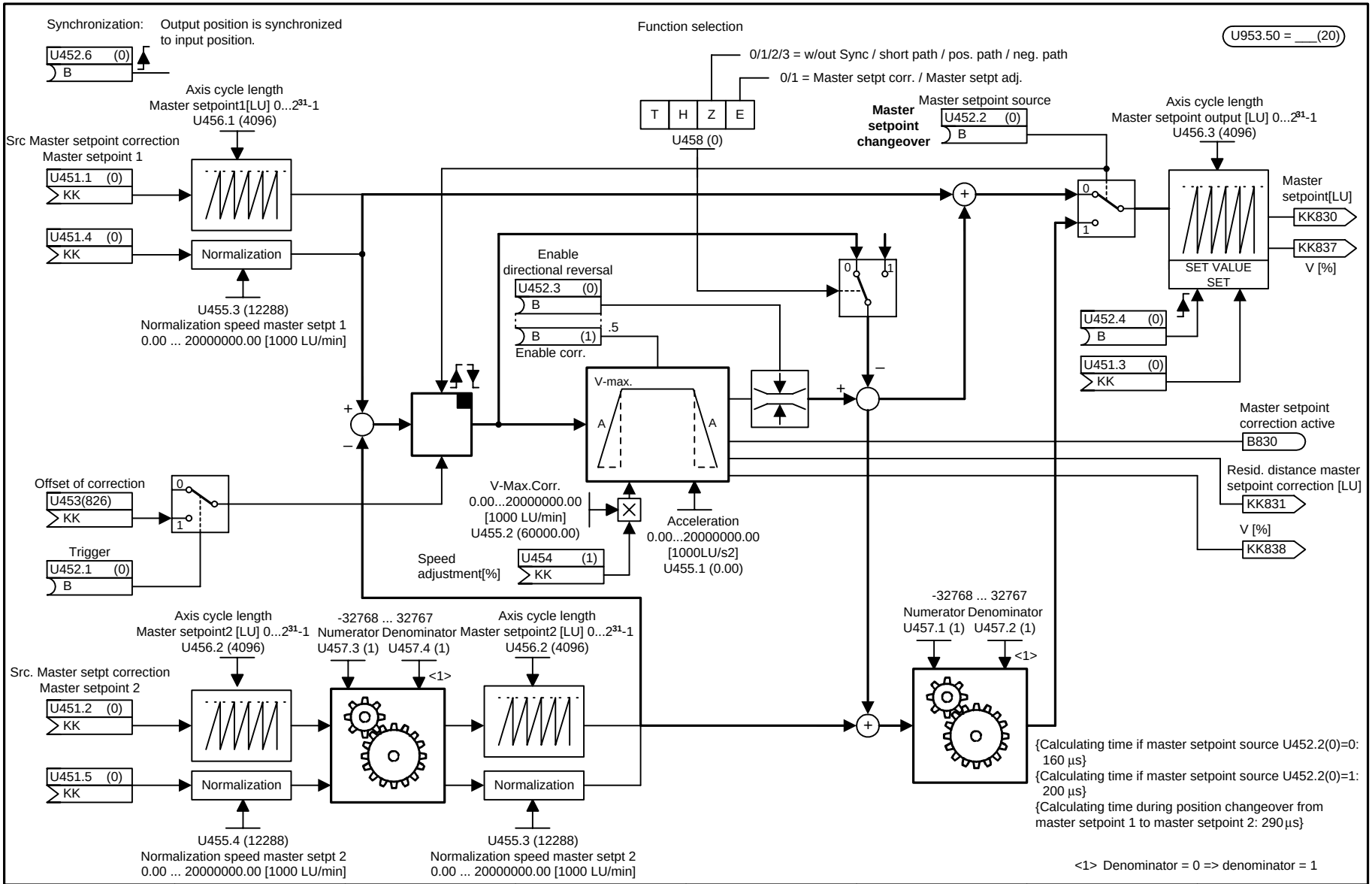

1	2	3	4	5	6	7	8
Technology Option				V1.6	fp_mc_845_e.vsd	Function diagram	- 845 -
Master setpoint correction					24.10.01	MASTERDRIVES MC	

Master setpoint correction compatible mode (U458 = xx0x) (function selection "without synchronizing")

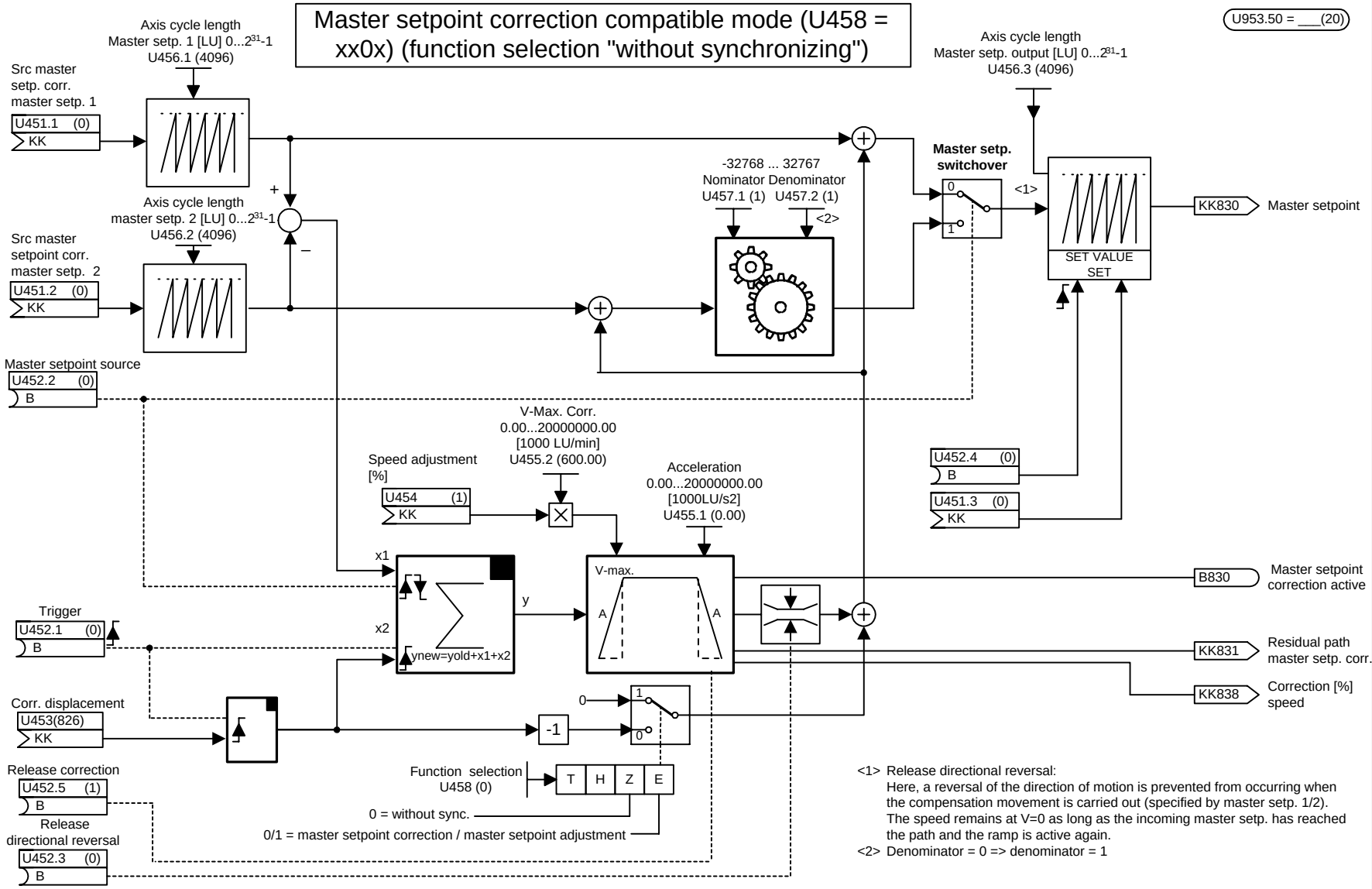

<1> Release directional reversal:
Here, a reversal of the direction of motion is prevented from occurring when the compensation movement is carried out (specified by master setp. 1/2). The speed remains at V=0 as long as the incoming master setp. has reached the path and the ramp is active again.

<2> Denominator = 0 => denominator = 1

1	2	3	4	5	6	7	8
Technology option				V1.6	fp_mc_845a_e.vsd	Function diagram	- 845a -
Master setpoint correction compatible mode					03.09.01	MASTERDRIVES MC	

Master setpoint correction speed path (U458 <> xx0x)

U953.50 = ___(20)

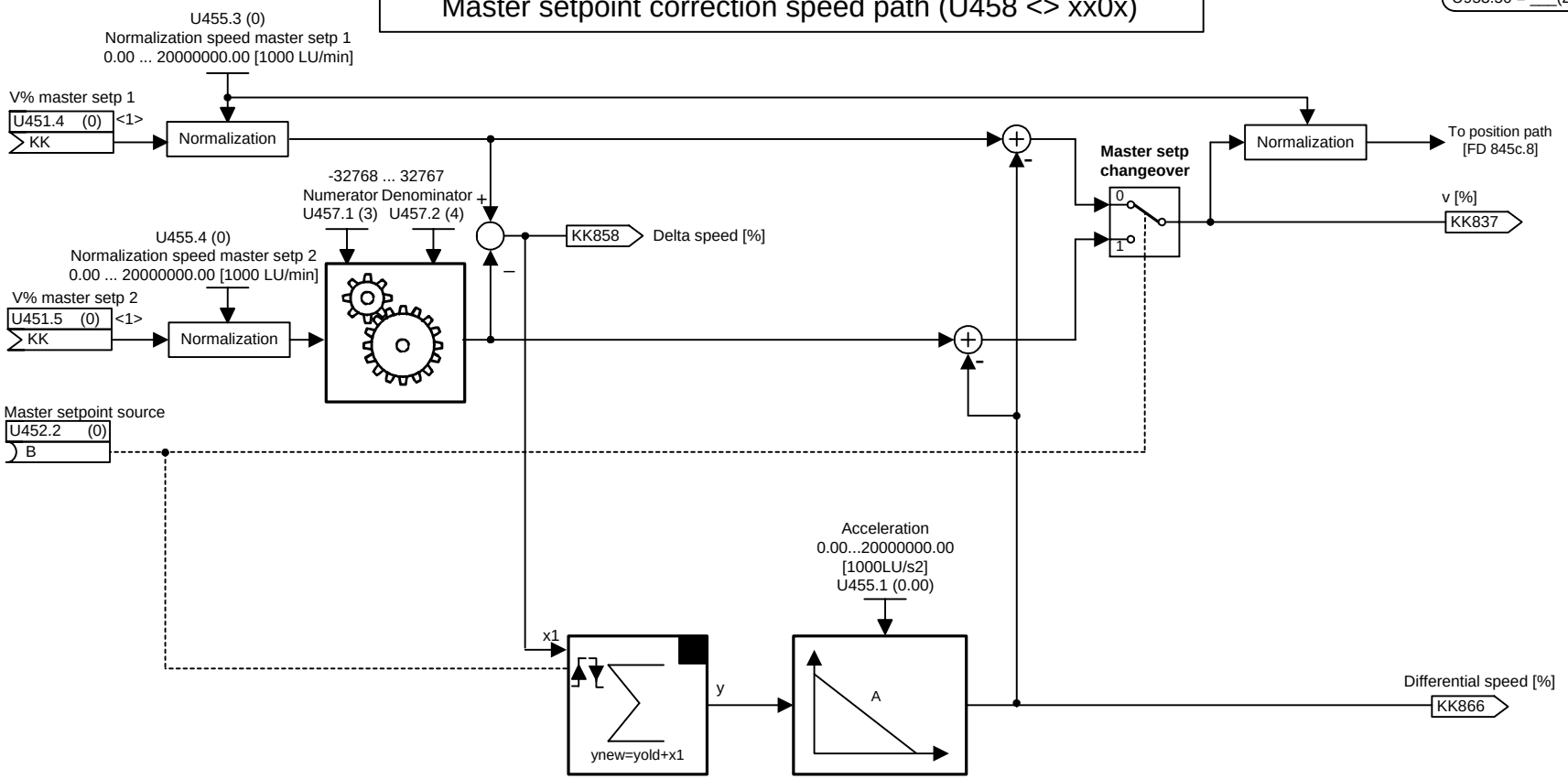

<1> If no percentage master setpoint is used in the speed path (U451.4 = 0, U451.5 = 0), the speed is derived from the position master setpoint 1 (U451.1) or the position master setpoint 2 (U451.2) by differentiation.

1	2	3	4	5	6	7	8
Technology option				V1.6	fp_mc_845b_e.vsd	Function diagram	- 845b -
Master setpoint correction speed path					08.01.02	MASTERDRIVES MC	

Master setpoint correction position path (U458 <> xx0x)

U953.50 = ___(20)

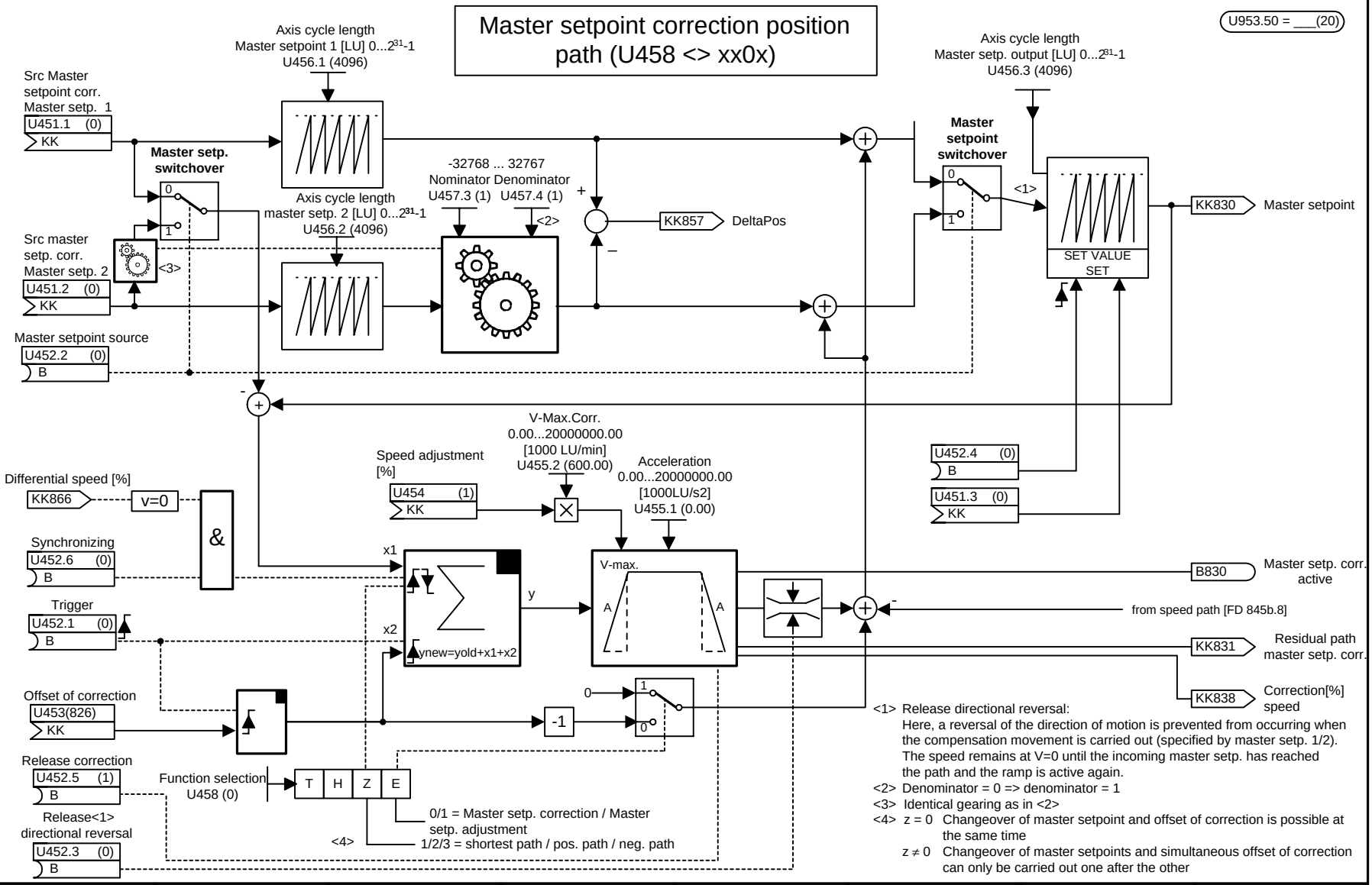

<1> Release directional reversal:
Here, a reversal of the direction of motion is prevented from occurring when the compensation movement is carried out (specified by master setp. 1/2). The speed remains at V=0 until the incoming master setp. has reached the path and the ramp is active again.

<2> Denominator = 0 => denominator = 1

<3> Identical gearing as in <2>

<4> z = 0 Changeover of master setpoint and offset of correction is possible at the same time

z ≠ 0 Changeover of master setpoints and simultaneous offset of correction can only be carried out one after the other

1	2	3	4	5	6	7	8
Technology option				V1.6	fp_mc_845c_e.vsd	Function diagram	- 845c-
Master setpoint position path					08.01.02	MASTERDRIVES MC	

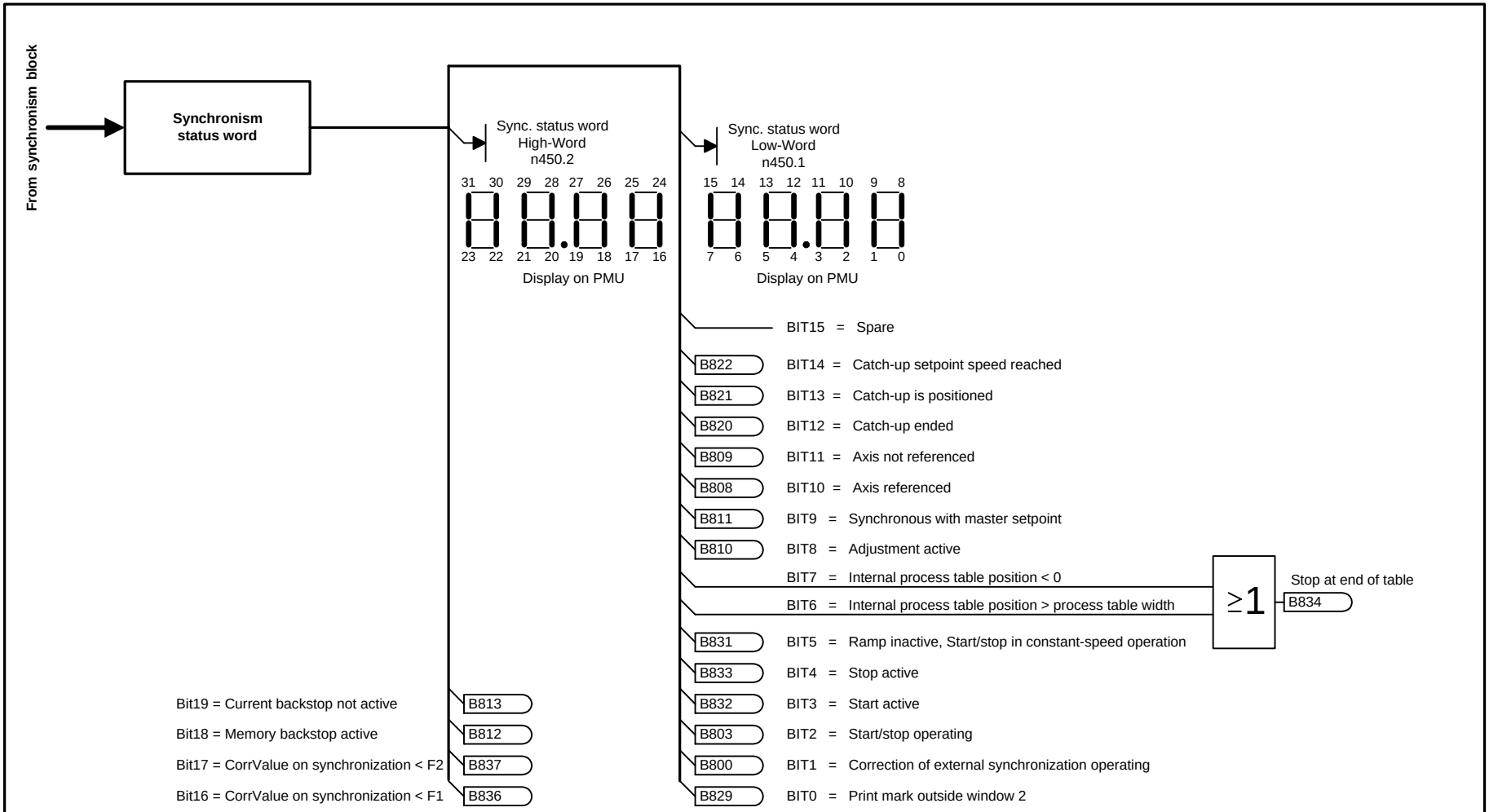
From synchronism block
Synchronism status word
Sync. status word High-Word n450.2
31 30 29 28 27 26 25 24
23 22 21 20 19 18 17 16
Display on PMU
Sync. status word Low-Word n450.1
15 14 13 12 11 10 9 8
7 6 5 4 3 2 1 0
Display on PMU
BIT15 = Spare
B822 BIT14 = Catch-up setpoint speed reached
B821 BIT13 = Catch-up is positioned
B820 BIT12 = Catch-up ended
B809 BIT11 = Axis not referenced
B808 BIT10 = Axis referenced
B811 BIT9 = Synchronous with master setpoint
B810 BIT8 = Adjustment active
BIT7 = Internal process table position < 0
BIT6 = Internal process table position > process table width
≥1
Stop at end of table
B834
B831 BIT5 = Ramp inactive, Start/stop in constant-speed operation
B833 BIT4 = Stop active
B832 BIT3 = Start active
B803 BIT2 = Start/stop operating
B800 BIT1 = Correction of external synchronization operating
B829 BIT0 = Print mark outside window 2
Bit19 = Current backstop not active
B813
Bit18 = Memory backstop active
B812
Bit17 = CorrValue on synchronization < F2
B837
Bit16 = CorrValue on synchronization < F1
B836

Enabling of the "F01 technology option" (positioning and synchronization)

It is necessary that the F01 technology option has been enabled:
The F01 technology option can only be used with MASTERDRIVES MC units which have been delivered ex-works with the enabled F01 option or for which this option has been enabled retrospectively by means of a PIN number. The display parameter n978 can be used to check if the F01 is present:

n978 = 2 ==> Technology option F01 is enabled for 500 h (from V1.31)
n978 = 1 ==> F01 technology option has been permanently enabled
n978 = 0 ==> F01 technology option has been disabled

The technology function remains enabled even after a software update and does not have to be entered again after new software has been loaded into the flash EPROM.
From version V1.31 onwards, temporary enabling is indicated by the value 2 in n978.

Retrospective enabling of the F01 technology function (involves extra costs):
Proceed as follows if you want to permanently enable the F01 technology option retrospectively

1) Determine the factory serial number of the MASTERDRIVES unit electronics. There are two ways of doing this:
   a) From parameters U976.01 and U976.02, you can read out the last 8 figures of the factory serial number which are necessary for determining the PIN number.
      (Example: U976.01 = 3032, U976.02 = 4198 ==> Factory serial number = ... 30324198)
   b) The serial number can also, if necessary, be obtained from a MASTERDRIVES unit without connecting it to the supply.
      - In the case of Compact PLUS units, it is on the sheet accompanying the delivery note or on the electronics PC board in the unit (remove side cover), e.g. "RFU80982510106"
      - In the case of Compact and chassis-type units, it is on the upper connector strip on the rear of the CUMC basic electronics board, e.g. "Q69707 30324198"
2) Contact your nearest Siemens branch in order to purchase the PIN number which matches your serial number. Quote the last eight figures of the serial number.
3) After you have obtained the PIN number, enter it in parameters U977.1 and U977.2.
4) Switch off the power supply to the electronics and then switch it on again.
5) The F01 technology option is now enabled. You can check this by referring to n978 (see above)

Caution: If the PIN-No. U977 is subsequently changed, enabling of the technology is reset (n978=0).

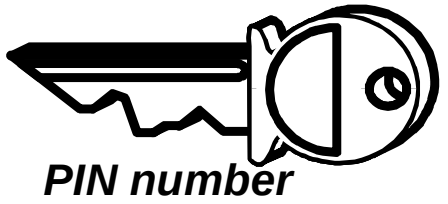

Temporary enabling of the F01 technology option (free of charge):
For all units and electronics boards, the F01 technology option can be enabled free of charge with a special PIN No.. This can be done **once** for a trial period of 500 hours. This time can be used for testing purposes or for using substitute units which have been ordered without the F01 option as long as the PIN number has not yet been received. The operating-hours counter (r825) determines when this time has expired. Only that time is counted during which the drive is on. After the 500 hours have expired and the voltage supply has been turned off, the F01 option is disabled again unless the 'normal' PIN has been entered in the meantime.The 500 hours can no longer be interrupted (e.g. by changing the PIN entries).
Input of the special PIN number can only be done via the PMU. The special PIN is the same for all units and is as follows

U977.1= 0727, U977.2 = 0101

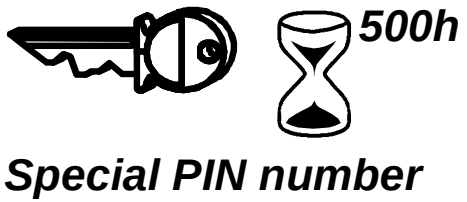

Enabling for units with software version 1.1 (free of charge):
In the case of units which have been supplied with software version V1.1, an individual serial number has not been explicitly entered. In this case, permanent enabling of the F01 technology option when your equipment is upgraded with a new software version is always possible. If you have version V1.1, the following table shows the 4 possible serial numbers and the matching PIN numbers which can be read out in U976 in order to enable the function.

FID			PIN		FID			PIN	
U976.1	U976.2		U977.1	U977.2	U976.1	U976.2		U977.1	U977.2
0000	0000	==>	9970	5525	FFFF	FFFF	==>	9978	0025
0000	FFFF	==>	6682	5525	0000	2800	==>	1970	5543

Parameter lists

General parameters	to 74	Sequence control	to 629
Motor and encoder data	to 154	Terminals	to 699
Closed-loop control / Gating unit	to 349	Communications	to 779
Functions 1	to 399	Diagnostics / Monitoring	to 830
Setpoint channel	to 514	Special parameters	to 849
Functions 2	to 549	Special parameters OP1S / SIMOVIS/DriveMonitor	to 899
Technology parameters	to 1999	Free function blocks	to 2449
Technology: Synchronism (master setpoint correction)	to 2479	Trace	2480 ... 2499
Technology: Positioning (F01)	2500 ... 2599	Printing functions	2800 ... 2849
Technology: Synchronism (F01)	2600 ... 2699	Reserved	2890 ... 2899
Technology: Positioning (F01)	2700 ... 2799	Reserved	2921 ... 2949
Basic positioning	2850 ... 2889	Technology parameters T400	to 3999
Basic unit management	2900 ... 2920		
Release and management parameters	2950 ... 2999		

Explanations

Parameter	Description	Data	Read/Write
P999* [1)] Par. example [2)] 999 [3)]	"Description"	Factory: 0.0 [4.1)] Index 1: 0.0 [4.2)] Min: -200.0 [5)] Max: 200.0 [6)] Unit: % [7)] Indices:2, [8)] BDS [9)] Type: I2 [10)]	Menus: - Parameter menu [11)] + Communication + Motor data Changeable in: [12)] -ready -run

1) * means confirmation parameter: not active until after confirmation (press [P] key)

r xxx Visualization parameter	Parameter number <1000
P xxx Setting parameter	Parameter number < 1000
d xxx Visualization parameter	Parameter number ≥ 1000 and < 2000 for T100,T300,T400 (not in this list)
H xxx Setting parameter	Parameter number ≥ 1000 and < 2000 for T100,T300,T400 (not in this list)
n xxx Visualization parameter	Parameter number ≥ 2000 and < 3000
U xxx Setting parameter	Parameter number ≥ 2000 and < 3000
c xxx Visualization parameter	Parameter number ≥ 3000 for T400 (not in this list)
L xxx Setting parameter	Parameter number ≥ 3000 for T400 (not in this list)

The thousands digit of the parameter number is coded by means of letters so that it can also be shown on the PMU.

2) Parameter name in plaintext (e. g. for operator panel OP1S and SIMOVIS/DriveMonitor)
3) Parameter number with place for thousands (relevant for automation and serial interfaces)
4) 1st value of the factor setting in the case of non-indexed parameters.
   2nd value of the factory setting of the 1st index in the case of indexed parameters. The complete list of factory settings of the first 4 indices is at the end of the parameter list.
5) Minimum value which can be set. Is only given in the case of setting parameters. The value can be limited due to converter-dependent variables.
6) Maximum value which can be set. Is only given in the case of setting parameters. The value can be limited due to converter-dependent variables.
7) Unit of the parameter value. In the case of percentages, these refer to the pertinent reference values (P350 to P354, see also function diagram [20]).
8) Number of indices in the case of indexed parameters.
9) If the parameter is contained in a function data set (FDS) or BICO data set (BDS), this is indicated here. (See also function diagram [540] and [20])
10) Parameter type

O2	16-bit value without sign
I2	16-bit value with sign
I4	32-bit value with sign
L2	Nibble-coded variable
V2	Bit-coded variable
,B	Binector parameter (see also function diagram [15])
,K	Connector parameter (16-bit, see also function diagram [15])
,KK	Double-connector parameter (32-bit, see also function diagram [15])

11) Indicates the menus in which the parameter can be read. Menu selected by means of P60.
12) The parameter can be changed in the following converter statuses (see also function diagram [20]):

Examples:	To be seen in	
Status:	r001=	
Power-section definition	0	Change with P060 = 8 into 'Power-section definition' status necessary
Board definition	4	Change with P060 = 4 into 'Board definition' status necessary
Drive setting	5	Change with P060 = 5 into 'Drive setting' status necessary
Ready	9	
Run	14	
Download	21	Change with P060 = 6 into 'Download' status necessary

Return to the 'Ready' status with P060 = 1

General Parameter list

Parameter list Motion Control

05.07.2004

Parameter	Description	Data	Read/write
r001 Drive Status 1	Visualization parameter for the current status of the converter or inverter. The converter status is, for example, determined by the control commands for the internal sequence control (see control word 1 and 2 r550,r551) and by menu selection P060. 0 = Power section definition 1 = Initialization of converter or inverter 2 = Hardware initialization 3 = Drive system initialization 4 = Board configuration 5 = Drive setting 6 = Selection of several drive test functions 7 = Störung 8 = Start inhibt 9 = Ready for ON 10 = Precharging of Dc link bus 11 =Ready for operation 12 = Ground fault test 13 = "Flying restart" is active 14 = Operation 15 = OFF1 is active 16 = OFF3 is active 17 = "DC braking" is active 18 = Motor data identification at standstill is active 19 = Optimization of speed controller 20 = "Synchronization" active 21 = Download	Dec.Plc.: 0 Unit: - Indices: - Type: O2	Menus: - Parameter menu + General parameters + Motor/encoder + Encoder data + Control/gating unit + Position control + Diagnostics + Trace + Technology + Synchronism + Positioning - Fixed settings - Quick parameterization - Board configuration - Drive setting - Download - Upread/free access - Power section definition
r002 n(act) 2	Visualization parameter for the speed actual-value.	Dec.Plc.: 0 Unit: 1/min Indices: - Type: I2	Menus: - Parameter menu + General parameters - Upread/free access
r004 Output Amps 4	Visualization parameter for the output current of the converter or inverter. The r.m.s. value of the fundamental component is shown. When the output frequency is 0 Hz, the DC current flowing at the moment amounts to 1.41 times the value displayed.	Dec.Plc.: 1 Unit: A Indices: - Type: O2	Menus: - Parameter menu + General parameters - Upread/free access
r006 DC Bus Volts 6	Visualization parameter for current DC link bus voltage. For inverters, the displayed value corresponds to the current input DC voltage.	Dec.Plc.: 0 Unit: V Indices: - Type: I2	Menus: - Parameter menu + General parameters - Upread/free access
r007 Motor Torque 7	Visualization parameter for torque referred to the reference torque (P354). Precondition: P290 = 0 (field-oriented current control)	Dec.Plc.: 1 Unit: % Indices: - Type: I2	Menus: - Parameter menu + General parameters - Upread/free access
r008 Motor Utilizat. 8	Visualization parameter for thermal motor utilization (calculated value). Precondition: P383 >= 100 s and no temperature sensor selected. ATTENTION. The overload protection derived from this parameter is only effective if sufficient cooling of the motor is ensured.	Dec.Plc.: 0 Unit: % Indices: - Type: O2	Menus: - Parameter menu - Upread/free access

Parameter	Description	Data	Read/write
r009 Motor Temperat. 9	Visualization parameter for current motor temperature. To ensure correct display, the motor temperature must be measured with the sensor selected in P131. If a PTC sensor (P131=2) is selected, the sitching state of the PTC is displayed (0: temperatur ok; 1: overtemperature) instead of the temperature itself.	Dec.Plc.: 0 Unit: °C Indices: - Type: I2	Menus: - Parameter menu + General parameters - Upread/free access
r010 Drive Utilizat. 10	Visualization parameter for current thermal utilization of the converter or inverter. The utilization is determined by an i2t calculation in relation to the output current. A value of 100 % is achieved with the rated current during continuous operation. If 100 % utilization is exceeded, a warning is tripped (A024) and the output current is reduced to 91 % of the rated current. In function diagram 490.3	Dec.Plc.: 0 Unit: % Indices: - Type: O2	Menus: - Parameter menu + General parameters - Upread/free access
r012 Active BICO DSet 12	Visualization parameter for the BICO data set currently active. 1 = Data set 1 2 = Data set 2 A BICO data set is selected with control word bit 30. The relevant BICO parameter for linking the control word bit is P590.	Dec.Plc.: 0 Unit: - Indices: - Type: O2	Menus: - Parameter menu + General parameters - Upread/free access
r013 Active FuncDSet 13	Visualization parameter for the function data set currently active 1 = Data set 1 2 = Data set 2 3 = Data set 3 4 = Data set 4 A function data set is selected with control word bits 16 and 17. The relevant BICO parameters for linking the control word bits are P576 and P577.	Dec.Plc.: 0 Unit: - Indices: - Type: O2	Menus: - Parameter menu + General parameters - Upread/free access
P026* CouplCh fix 26	Service parameter, only for Siemens service personnel Coupling between DSP<->C167 Important: Pilot version - changes probable For experts only; no parameters for general use! This parameter is used for manually assigning a connector (PWE) to a coupling channel (index). PWE = 0 signifies that the coupling channel is assigned automatically (on wiring a connector). If, in the case of double-word connectors, only one coupling channel is assigned, then the high word is linked. If the same double-word connector is assigned twice in the same coupling block (one block corresponds to a sequence of 8 channels, e.g. Index 01 to 08, Index 09 to 16, Index 17 to 24, etc), the double word is fully coupled. An entry is refused if the channel or connector is already in use (through automatic coupling assignment). See P027 in this connection. Indices: Index=Channel number Channel 01-24: Coupling to T2 (= 4T0) Channel 25-32: Coupling to T3 (= 8T0) Channel 33-40: Coupling to T4 (= 16T0)	index1: 0 Min: 0 Max: 8046 Unit: - Indices: 40 Type: O2	Menus: - Parameter menu - Board configuration - Drive setting - Upread/free access - Power section definition Changeable in: - Power section definition - Board configuration - Drive setting

Parameter	Description	Data	Read/write
r027 AssignmtCoupCh 27	Service parameter, only for Siemens service personnel The visualization parameter shows the assignments made to coupling channels C167<->DSP. The parameter value indicates the connector number. Parameter values: 0: Coupling channel free 9999: Coupling channel occuppied (by internal datum) Indices: Index=channel number Channels 01-24: Coupling to T2(= 4TO) Channels 25-32: Coupling to T3(= 8TO) Channels 33-40: Coupling to T4(= 16TO) Index 41 to Index 43 show the number of free coupling channels (DSP<->C167 of time slots T2 to T4.	Dec.Plc.: 0 Unit: - Indices: 43 Type: O2	Menus: - Parameter menu - Board configuration - Drive setting - Upread/free access - Power section definition
P030* Src Disp Binec 30	BICO parameter for selecting binectors which are to be shown in visualization parameter r031. The binector numbers entered in the respective index are displayed in the same index of parameter r031. In function diagram: 30.1	index1: 0 Unit: - Indices: 5 Type: L2 ,B	Menus: - Parameter menu + General parameters - Upread/free access Changeable in: - Drive setting - Ready
r031 Display Binector 31	Visualization parameter for displaying the binectors given in P030. The binectors displayed in the respective index have been selected in the same index of parameter P030. In function diagram: 30.2	Dec.Plc.: 0 Unit: - Indices: 5 Type: O2	Menus: - Parameter menu + General parameters - Upread/free access
P032* Src Disp Conn 32	BICO parameter for selecting connectors which are to be displayed in visualization parameter r033 in [%]. The connector numbers shown in the respective index are displayed in the same index of parameter r033. In function diagram: 30.1	index1: 0 Unit: - Indices: 5 Type: L2 ,K ,K	Menus: - Parameter menu + General parameters - Upread/free access Changeable in: - Drive setting - Ready
r033 Display Conn 33	Visualization parameter for displaying the connectors given in P032. The connnectors displayed in the respective index have been selected in the same index of parameter P032. A connector value of 4000 H or 4000 0000 H is shown at 100 %. In function diagram: 30.2	Dec.Plc.: 3 Unit: % Indices: 5 Type: I4	Menus: - Parameter menu + General parameters - Upread/free access
P034* SrcDispVoltsConn 34	BICO parameter for selecting connectors which contain a voltage and are to be displayed in visualization parameter r035 in [V]. The connector numbers entered in the respective index are displayed in the same index of parameter r035. In function diagram: 30.4	index1: 0 Unit: - Indices: 5 Type: L2 ,K	Menus: - Parameter menu + General parameters - Upread/free access Changeable in: - Drive setting - Ready
r035 Disp Volts Conn 35	Visualization parameter for displaying connectors given in P034 in [V]. The connectors displayed in the respective index have been selected in the same index of parameter P034. The normalization is specified in P351. The following method of calculation must be used: r035 = P351 xConnector Value in [%]/100%. In function diagram: 30.5	Dec.Plc.: 1 Unit: V Indices: 5 Type: I4	Menus: - Parameter menu + General parameters - Upread/free access

Parameter	Description	Data	Read/write
P036* SrcDispAmpsConn 36	BICO parameter for selecting connectors which contain a current and are to be displayed in visualization parameter r037 in [A]. The connector numbers entered in the respective index are displayed in the same index of parameter r037. In function diagram: 30.4	index1: 0 Unit: - Indices: 5 Type: L2 ,K	Menus: - Parameter menu + General parameters - Upread/free access Changeable in: - Drive setting - Ready
r037 Disp Amps Conn 37	Visualization parameter for the display of connectors given in P036 in [A]. The connectors displayed in the respective index have been selected in the same index of parameter P036. The normalization is specified in P350. The following method of calculation must be used: r037 = P350 xConnector Value in [%]/100%. In function diagram: 30.5	Dec.Plc.: 2 Unit: A Indices: 5 Type: I4	Menus: - Parameter menu + General parameters - Upread/free access
P038* Src DispTorqConn 38	BICO parameter for selecting connectors which contain a torque and are to be displayed in visualization parameter r039 in [Nm]. The connector numbers entered in the respective index are displayed in the same index of parameter r039.	index1: 0 Unit: - Indices: 5 Type: L2 ,K	Menus: - Parameter menu + General parameters - Upread/free access Changeable in: - Drive setting - Ready
r039 Disp Torq Conn 39	Visualization parameter for the display of connectors given in P038 in [Nm]. The connectors displayed in the respective index have been selected in the same index of parameter P038. The normalization is specified in P354. The following method of calculation must be used: r039 = P354 x Connector Value in [%]/100%.	Dec.Plc.: 2 Unit: Nm Indices: 5 Type: I4	Menus: - Parameter menu + General parameters - Upread/free access
P040* SrcDisp SpdConn 40	BICO parameter for selecting connectors which contain a speed and are to be displayed in visualization parameter r041 in [1/min]. The connector numbers entered in the respective index are displayed in the same index of parameter r041. In function diagram: 30.7	index1: 0 Unit: - Indices: 5 Type: L2 ,K ,K	Menus: - Parameter menu + General parameters - Upread/free access Changeable in: - Drive setting - Ready
r041 Disp Speed Conn 41	Visualization parameter for the display of connectors given in P040 in [1/min]. The connectors displayed in the respective index have been selected in the same index of parameter P040. The normalization is specified in P353. The following method of calculation must be used: r041 = P353 xConnector Value in [%]/100%. In function diagram: 30.8	Dec.Plc.: 1 Unit: 1/min Indices: 5 Type: I4	Menus: - Parameter menu + General parameters - Upread/free access
P042* SrcDispFreqConn 42	BICO parameter for selecting connectors which contain a frequency and are to be displayed in visualization parameter r043 in [Hz]. The connector numbers entered in the respective index are displayed in the same index of parameter r043. In function diagram: 30.7	index1: 0 Unit: - Indices: 5 Type: L2 ,K ,K	Menus: - Parameter menu + General parameters - Upread/free access Changeable in: - Drive setting - Ready

Parameter	Description	Data	Read/write
r043 Disp Freq Conn 43	Visualization parameter for the display of connectors given in P042 in [Hz]. The connectors displayed in the respective index have been selected in the same index of parameter P042. The normalization is specified in P352. The following method of calculation must be used: r043 = P352 x Connector Value in [%]/100%. In function diagram: 30.8	Dec.Plc.: 2 Unit: Hz Indices: 5 Type: I4	Menus: - Parameter menu - Upread/free access
P044* SrcDisp DecConn 44	BICO parameter for selecting connectors which are to displayed in visualization parameter r045 as an integral decimal number preceded by a plus or minus sign. The connector numbers entered in the respective index are displayed in the same index of parameter r045. In function diagram: 30.1	index1: 0 Unit: - Indices: 5 Type: L2 ,K ,K	Menus: - Parameter menu + General parameters - Upread/free access Changeable in: - Drive setting - Ready
r045 Disp DecConn 45	Visualization parameter for the display of connectors given in P044 as an integral whole decimal number. The connectors displayed in the respective index have been selected in the same index of parameter P044. In function diagram: 30.2	Dec.Plc.: 0 Unit: - Indices: 5 Type: I4	Menus: - Parameter menu + General parameters - Upread/free access
P046* SrcDisp HexConn 46	BICO parameter for selecting connectors which are to be displayed in visualization parameter r047as an integral value (hexadecimal). The connector numbers entered in the respective index are displayed in the same index of parameter r047. In function diagram: 30.1	index1: 0 Unit: - Indices: 5 Type: L2 ,K ,K	Menus: - Parameter menu + General parameters - Upread/free access Changeable in: - Drive setting - Ready
r047 Disp Hex Conn 47	Visualization parameter for the display of connectors given in P046 as a hexadecimal number. If word connectors have been selected in P046, then Indices 1 to 5 = Value of the connector Indices 6 to 10 = 0 If double word connectors have been selected in P046, then: Indices 1 to 5 = Upper 16 bits of the connector Indices 6 to 10 = Corresponding lower 16 bits of the connector Example: KK0091 = 1234 5678 P046.1= 91 r047.1 = 1234 r047.6 = 5678 In function diagram: 30.2	Dec.Plc.: 0 Unit: - Indices: 10 Type: L2	Menus: - Parameter menu + General parameters - Upread/free access
P048* PMU OperDisp 48	Function parameter for selecting parameter whose value is to be indicated in the operating display of the PMU.	Init: 2 Min: 0 Max: 3999 Unit: - Indices: - Type: O2	Menus: - Parameter menu + General parameters - Upread/free access Changeable in: - Drive setting - Ready

Parameter	Description	Data	Read/write
P049* OP OperDisp 49	Function parameter for selecting parameters whose values are to be shown in the operating display of the optional OP1S user-friendly operator control panel. Index 1: 1st line left Index 2: 1st line right Index 3: 2nd line (actual value), only visualization parameters Index 4: 3rd line (setpoint) Index 5: 4th line In function diagram: For Compact/Chassis units: 60.1 For Compact PLUS units: 61.1	index1: 4 Min: 0 Max: 3999 Unit: - Indices: 5 Type: O2	Menus: - Parameter menu + General parameters - Upread/free access Changeable in: - Drive setting - Ready
P050* Language 50	Function parameter for setting the language in which texts are to be displayed on the optional OP1S user-friendly operator control panel. 0 = German 1 = English 2 = Spanish 3 = French 4 = Italian This parameter is not reset during factory setting !	Init: 0 Min: 0 Max: 4 Unit: - Indices: - Type: O2	Menus: - Parameter menu + General parameters - Upread/free access Changeable in: - Drive setting - Ready
P053* Parameter Access 53	Function parameter for releasing interfaces for parameterization. 0 Hex = None 1 Hex = Cbx communication board 2 Hex = PMU operator control panel 4 Hex = Serial interface (SCom/SCom1), also OP1S and PC 8 Hex = SCB serial input/output modules 10 Hex = Txxx technology board 20 Hex = Serial interface 2 (SCom2) 40 Hex = Second CB board Each interface has a code number. When the number or the sum of different numbers assigned to the interfaces is/are entered, the interface(s) is/are released for use as a parameterizing interface. Example: The factory-setting value 6 is the sum of 2 and 4. This means that parameterization is allowed via the PMU and serial interface 1 and thus for the OP1S as well. The parameter can always be written from any interface. This also applies if this interface has not been released for parameterization purposes. During factory setting via CBx, SCB, TXXX, SCom2 or a second CB board, this parameter is not reset.	Init: 7 Min: 0 Max: 65535 Unit: - Indices: - Type: V2	Menus: All menus Changeable in: All states
r054 Requester 54	This visualization parameter returns the origin of the read request. It can therefore be scanned to find out which interface is being used. The values correspond to those of P53.	Dec.Plc.: 0 Unit: - Indices: - Type: L2	Menus: - User parameters- Parameter menu + General parameters - Fixed settings - Quick parameterization - Board configuration - Drive setting - Download - Upread/free access - Power section definition

Parameter	Description	Data	Read/write
P060* Menu Select 60	Function parameter for selecting the current menu. 0 = User parameter (selection of the visible parameters in P360) 1 = Parameter menu 2 = Fixed settings (for factory settings) 3 = Quick parameterization (changes to "Drive Setting" state) 4 = Board configuration (changes to "Board Configuration" state) 5 = Drive setting (changes to "Drive Setting" state) 6 = Download (changes to "Download" state) 7 = Upread/Free access 8 = Power section definition (changes to "Power section definition" state) If it is not possible to change to another state due to the currently valid state, the corresponding menu cannot be selected either. Example: "Operating" state, change to "Download" not possible. "Ready for switching on" state, change to "Download" not possible. With parameters P358 Key and P359 Lock, menus can be locked with the exception of the menus "User parameters" and "Fixed settings".	Init: 1 Min: 0 Max: 8 Unit: - Indices: - Type: O2	Menus: All menus Changeable in: All states
P067 Cool SpecTypes 67 not Compact PLUS	Only for customer-specific special MASTERDRIVES types of construction. For future use, not implemented at present!	Init: 0 Min: 0 Max: 1 Unit: - Indices: - Type: O2	Menus: - Parameter menu - Upread/free access - Power section definition Changeable in: - Power section definition
r069 SW Version 69 Compact PLUS only	Visualization parameter for displaying the software versions of the basic board as well as the optional boards in slots A to G Index 1: Software version of basic board Index 2: Software version of optional board Slot A Index 3: Software version of optional board Slot B Index 4: Software version of optional board Slot C Index 5: Software version of optional board Slot D Index 6: Software version of optional board Slot E Index 7: Software version of optional board Slot F Index 8: Software version of optional board Slot G The slots D-G are not available in type COMPACT PLUS. For optional boards which contain no software, (e.g. SBR, SLB), the parameter value in the respective index is always 0.0.	Dec.Plc.: 1 Unit: - Indices: 4 Type: O2	Menus: - Parameter menu + General parameters - Fixed settings - Quick parameterization - Board configuration - Drive setting - Download - Upread/free access - Power section definition

Parameter	Description	Data	Read/write
r069 SW Version 69 not Compact PLUS	Visualization parameter for displaying the software versions of the basic board as well as the optional boards in slots A to G Index 1: Software version of basic board Index 2: Software version of optional board Slot A Index 3: Software version of optional board Slot B Index 4: Software version of optional board Slot C Index 5: Software version of optional board Slot D Index 6: Software version of optional board Slot E Index 7: Software version of optional board Slot F Index 8: Software version of optional board Slot G The slots D-G are not available in type COMPACT PLUS. For optional boards which contain no software, (e.g. SBR, SLB), the parameter value in the respective index is always 0.0.	Dec.Plc.: 1 Unit: - Indices: 8 Type: O2	Menus: - Parameter menu + General parameters - Fixed settings - Quick parameterization - Board configuration - Drive setting - Download - Upread/free access - Power section definition
P070* Order No. 6SE70. 70 not Compact PLUS	Function parameter for entering the order numbers of converter or inverter modules. These numbers tell the CUMC control board which power section it works with. They are entered in the "power section definition" state and only need to be entered after the CU has been replaced. For parameter values, see Chapter "Power section definition" of the Compendium	Init: 0 Min: 0 Max: 254 Unit: - Indices: - Type: O2	Menus: - Parameter menu - Upread/free access - Power section definition Changeable in: - Power section definition
P070* Order No. 6SE70. 70 Compact PLUS only	Function parameter for entering the order numbers of converter or inverter modules. These numbers tell the control board which power section it works with. For parameter values, see Chapter "Power section definition" of the Compendium.	Init: 0 Min: 0 Max: 20 Unit: - Indices: - Type: O2	Menus: - Parameter menu + General parameters - Upread/free access - Power section definition Changeable in: - Power section definition
P071* Line Volts 71	Function parameter for entering the supply voltage of the converter or inverter. Converter (AC/AC): r.m.s. value of the line alternating voltage. Inverter (DC/AC): level of the input direct voltage = rated DC link voltage For inverters, this parameter is for calculating the rated DC link voltage (1.35 x Un). The calculated rated DC link voltage or the set parameter value give the thresholds for precharging and undervoltage detection. For induction motors, this parameter is for calculating the field-weakening frequency.	Init: 400 Min: 90 Max: 1320 Unit: V Indices: - Type: O2	Menus: - Parameter menu + General parameters - Quick parameterization - Drive setting - Upread/free access - Power section definition Changeable in: - Power section definition - Drive setting
P072* Rtd Drive Amps 72 not Compact PLUS	Parameter for displaying the rated current of the converter or inverter. The rated current is the current which can be output continuously. It must be identical with the information on the rating plate. Remember that the given rated current applies for a pulse frequency of 3 kHz (2.5kHz). Therefore in the case of chassis units of MASTERDRIVES MC (minimum pulse frequency 5kHz) the actual rated current is usually below this value. Also see MC Compendium Section 6.2.1 or Catalog DA65.11 Section 3, Basic Units.	Init: 6,1 Min: 0,0 Max: 6450,0 Unit: A Indices: - Type: O2	Menus: - Parameter menu + General parameters - Upread/free access - Power section definition Changeable in: - Power section definition

Parameter	Description	Data	Read/write
P072* Rtd Drive Amps 72 Compact PLUS only	Parameter for displaying the rated current of the converter or inverter. The rated current is the current which can be output continuously. It must be identical with the information on the rating plate. Remember that the given rated current applies for a pulse frequency of 3 kHz (2.5kHz). Therefore in the case of chassis units of MASTERDRIVES MC (minimum pulse frequency 5kHz) the actual rated current is usually below this value. Also see MC Compendium Section 6.2.1 or Catalog DA65.11 Section 3, Basic Units.	Init: 6,1 Min: 0,0 Max: 6450,0 Unit: A Indices: - Type: O2	Menus: - Parameter menu + General parameters - Upread/free access - Power section definition Changeable in: - Power section definition
P073* Rtd Drive Power 73	Parameter for displaying the rated power output of the converter or inverter.	Init: 2,2 Min: 0,3 Max: 6400,0 Unit: kW Indices: - Type: O2	Menus: - Parameter menu + General parameters - Upread/free access - Power section definition Changeable in: - Power section definition
P074* ChopperThreshold 74 Compact PLUS only	Function parameter for input of the braking chopper starting threshold. Effective only in the case of Compact PLUS converters (AC/AC). A minimum value is set for P74 depending on P71 Conv.SupplyV. Warning: P74 must never be set lower than the peak rectifier value at maximum line voltage. Otherwise the braking chopper remains continuously on, which can lead to overheating of the braking resistor. In function diagram 490.4	Init: 750 Min: 590 Max: 750 Unit: V Indices: - Type: O2	Menus: - Parameter menu + General parameters - Drive setting - Upread/free access - Power section definition Changeable in: - Power section definition - Drive setting - Drive setting
r088 kT Rated Value 88	Torque constant kT0 = kT_rated value + correction by the observer. This measured value can be entered in P98 as kT0_rated value to improve torque accuracy even with the observer deactivated.	Dec.Plc.: 2 Unit: Nm/A Indices: - Type: O2	Menus: - Parameter menu - Upread/free access
r089 kT Actual Value 89	Actual value of the torque constant n which is currently being taken into account. This value takes account of the current motor temperature.	Dec.Plc.: 2 Unit: Nm/A Indices: - Type: O2	Menus: - Parameter menu - Upread/free access
P090 kT Dependance 90	Index 01: not used Index 02: Temperature dependence of the magnetic material. The adaption functions only when the actual motor temperature is measured with a temperature sensor. The factory setting of 12%/100K is a usual value for neodym-iron-boron magnets. P90.02 kT = r088 * (1- ----------* (T-140°C)) 100 K	index1: 0,0 Min: 0,0 Max: 20,0 Unit: % Indices: 2 Type: O2	Menus: - Parameter menu + Control/gating unit + Current control - Drive setting - Upread/free access Changeable in: - Drive setting
P091 kT Adaption 91	kT adaption Index 1: Application threshold from which adaption is active as a percentage of the rated speed (P108) Index 2: Maximum deviation of the adapted kT value of the rated value (P98). The estimator is switched off at 0%. The maximum value amounts to 30%.	index1: 20,0 Min: 0,0 Max: 100,0 Unit: % Indices: 2 Type: O2	Menus: - Parameter menu - Drive setting - Upread/free access Changeable in: - Drive setting

Parameter	Description	Data	Read/write
P092 TrAdaption Gain 92	Gain of the equalizing controller of the rotor time constant adaptation. With P92=0.00% the adaptation is switched off.	Init: 0,00 Min: 0,00 Max: 200,00 Unit: % Indices: - Type: O2	Menus: - Parameter menu - Drive setting - Upread/free access Changeable in: - Drive setting - Drive setting
r093 Tr Actual Value 93	Actual value of the rotor time constant Tr referred to P124.	Dec.Plc.: 0 Unit: % Indices: - Type: O2	Menus: - Parameter menu - Drive setting - Upread/free access
P094 TempPRE Tr 94	for future use	Init: 0 Min: 0 Max: 65535 Unit: % Indices: - Type: O2	Menus: - Parameter menu - Upread/free access Changeable in: - Drive setting
P095* Select Mot Type 95	Function parameter for selecting the connected motor. 0 = No motor connected 1 = Synchronous servomotor 1FK6/1FK7/1FT6/1FS6 2 = Induction servomotor 1PH7/1PL6/1PH4 3 = Synchronous servomotor general 4 = Induction motor general If Siemens servomotors are used and 1 or 2 is entered, the connected motor can be directly selected in P096 and P097. The stored motor data are then taken automatically from an internal list. If other motors are used (entry of 3 or 4), the motor data must be entered separately. In the case of P095 = 3 or 4, automatic parameterization (P115 = 1) should be called after all the data have been entered and before the start of automatic motor identification. The motor designation 1PA6 has been changed to 1PH7 (without changing the motor data).	Init: 1 Min: 0 Max: 4 Unit: - Indices: - Type: O2	Menus: - Parameter menu + Motor/encoder + Motor data - Quick parameterization - Drive setting - Upread/free access Changeable in: - Drive setting
P096* Select1FK6/1FT6 96	Function parameter for selecting a 1FK6/1FK7/1FT6/1FS6 sychnoronous servomotor from the internal list of motors. For parameter values, see annex "Compendium". Note: 1FK7xxx HD (High Dynamic, P096=82-92) is the new designation of what were formerly 1FK6xxx. The 1FK7xxx HD and 1FK6xxx data therefore tally.	Init: 0 Min: 0 Max: 253 Unit: - Indices: - Type: O2	Menus: - Parameter menu + Motor/encoder + Motor data - Quick parameterization - Drive setting - Upread/free access Changeable in: - Drive setting
P097* Select 1PH7 97	Function parameter for selecting a 1PH7 (=1PA6), 1PL6 and 1PH4 induction motor from the internal list of motors. For parameter values, see annex "Compendium".	Init: 0 Min: 0 Max: 127 Unit: - Indices: - Type: O2	Menus: - Parameter menu + Motor/encoder + Motor data - Quick parameterization - Drive setting - Upread/free access Changeable in: - Drive setting

Parameter	Description	Data	Read/write
P098* Torque constant 98	Torque constant at standstill and maximum motor temperature (140 ºC) M0 / I0. Designation [Nm/A]. The value is slightly higher than the rated torque / rated current because there are no friction and iron losses at standstill. When the kT-estimator is activated, an estimated value for this torque constant can be read in parameter r88. Please keep in mind that the value range is restricted to 0.8 * (M_rated/I_rated) <= P098 <= 1.5 * (M_rated/I_rated). Therefore, the values for the motor rated current P102 and the motor rated torque P113 must already have been entered before you make any changes to P098.	Init: 1,40 Min: 0,10 Max: 655,00 Unit: Nm/A Indices: - Type: O2	Menus: - Parameter menu + Motor/encoder + Motor data - Drive setting - Upread/free access Changeable in: - Drive setting
P101* Mot Rtd Volts 101	Function parameter for entering the rated motor voltage for a connected induction motor. The rating-plate value is to be entered for the current type of connection (star or delta).	Init: 400 Min: 100 Max: 1000 Unit: V Indices: - Type: O2	Menus: - Parameter menu + Motor/encoder + Motor data - Drive setting - Upread/free access Changeable in: - Drive setting
P102* Motor Rtd Amps 102	Function parameter for entering the rated motor current of the connected synchronous or induction motor. The rating-plate value is to be entered for the current type of connection (star or delta).	Init: 0,00 Min: 0,00 Max: 600,00 Unit: A Indices: - Type: I4	Menus: - Parameter menu + Motor/encoder + Motor data - Drive setting - Upread/free access Changeable in: - Drive setting
P103* Mot No Load Amps 103	Function parameter for entering the motor no-load current for the connected induction/synchronous motor. For the connected induction motor a motor no-load current smaller than the rated motor current (P102) is to be entered. For the connected synchronous motor the motor no-load current value 0 A is to be entered.	Init: 0,00 Min: 0,00 Max: 600,00 Unit: A Indices: - Type: O2	Menus: - Parameter menu + Motor/encoder + Motor data - Drive setting - Upread/free access Changeable in: - Drive setting
P104* MotPwrFactor 104	Function parameter for entering the power factor for the connected induction motor. The rating-plate value is to be entered.	Init: 0,800 Min: 0,500 Max: 0,999 Unit: - Indices: - Type: O2	Menus: - Parameter menu + Motor/encoder + Motor data - Drive setting - Upread/free access Changeable in: - Drive setting
P107* Mot Rtd Freq 107	Function parameter for entering the rated motor frequency for the connected induction motor. The rating-plate value is to be entered.	Init: 50,0 Min: 10,0 Max: 400,0 Unit: Hz Indices: - Type: O2	Menus: - Parameter menu + Motor/encoder + Motor data - Drive setting - Upread/free access Changeable in: - Drive setting
P108* Mot Rtd Speed 108	Function parameter for entering the rated motor speed for the connected induction motor. The rating-plate value is to be entered.	Init: 3000 Min: 0 Max: 12000 Unit: 1/min Indices: - Type: O2	Menus: - Parameter menu + Motor/encoder + Motor data - Drive setting - Upread/free access Changeable in: - Drive setting

Parameter	Description	Data	Read/write
P109* Motor #PolePairs 109	Function parameter for entering the number of pole pairs for the connected synchronous or induction motor.	Init: 2 Min: 1 Max: 110 Unit: - Indices: - Type: O2	Menus: - Parameter menu + Motor/encoder + Motor data - Drive setting - Upread/free access Changeable in: - Drive setting
P111 Ls = f(Isd) 111	Function parameter for entering the support points of the function Ls=f(isd) . The support points are expressed in p. u. of the stator inductance at 40% of the rated motor current (P102). The support points are subdivided in 10%, 20%, ..., 100% of the rated motor current. Only for induction motors.	index1: 110,0 Min: 0,1 Max: 6553,5 Unit: % Indices: 10 Type: O2	Menus: - Parameter menu - Drive setting - Upread/free access Changeable in: - Drive setting
P113 Mot Rtd Torque 113	Function parameter for entering the rated motor torque for the connected synchronous motor. The rating-plate value is to be entered. Entering this is absolutely necessary for synchronous machine control. With the induction machine, the value is only necessary for the calculation of the reference torque/rated torque ratio. If the rated torque for an induction machine is not known, the same values should be entered in P113 and P354 (reference torque). For example, the values of the factory setting can be left in both parameters.	Init: 3,00 Min: 0,00 Max: 6535,00 Unit: Nm Indices: - Type: I4	Menus: - Parameter menu + Motor/encoder + Motor data - Drive setting - Upread/free access Changeable in: - Drive setting

Parameter	Description	Data	Read/write
P115* Calc MotModel 115	Function parameter for selecting various start-up sections and special functions. Parameter values: 0 = No calculation 1 = Start of the calculation of derived motor data Additional motor data needed for vectorial current control can be calculated from the rating-plate data. As a result, these no longer have to be entered separately. The following parameters are set by the calculation: P103 motor no-load current P120 main field inductance P121 stator resistor P122 total leakage reactance P123 stator reactance P124 rotor time constant P293 field-weakening frequency P294 select flux reg 2 = Selection of motor identification at standstill: With the next ON-command the automatic motor identification is started. Parameterization of closed-loop control from the measured motor data. The following parameters are set by the identification: P111 Ls = f(Isd) P119 ratio Lq/Ld P120 main field inductance P121 stator resistor P122 total leakage reactance P123 stator reactance In the case of current-controlled operation (P290=0), automatic motor identification should always be performed on start-up. In the case of P095=3 or 4, automatic parameterization (P115=1) should be called after entry of all motor data and before the start of automatic motor identification. Important: The motor is live, and the rotor behaves accordingly. The shaft may turn. After the P button has been pressed, alarm "A078" appears. The converter must be switched on within 20 s. 8=Position test for synchronous motors In this status after power up, a stator current is impressed with U(-), V and W(+), the absolute value of which is input via Isq (P270, P271). If the motor is free to move slightly, a misorientation of the motor encoder can be read on r286 (also see P549). Further values for future use!	Init: 0 Min: 0 Max: 8 Unit: - Indices: - Type: O2	Menus: - Parameter menu - Drive setting - Upread/free access Changeable in: - Drive setting - Drive setting
P119* Ratio Lq/Ld 119	Function parameter for entering the ratio of the mutual inductance transversal to the rotor-axis (Lq) to the mutual inductance along the rotor-axis (Ld) of a connected synchronous motor. The parameter value is calculated during the automatic motor data identification of derived motor data (P115).	Init: 0,880 Min: 0,200 Max: 5,000 Unit: - Indices: - Type: O2	Menus: - Parameter menu + Motor/encoder + Motor data - Drive setting - Upread/free access Changeable in: - Drive setting

Parameter	Description	Data	Read/write
P120* Main Field Induc 120	Function parameter for entering the main field inductance (in mH) of a connected synchronous motor. The value to be entered is 1.5 times the inductance of a winding phase in the star equivalent circuit.	Init: 0,0 Min: 0,0 Max: 2000,0 Unit: - Indices: - Type: O2	Menus: - Parameter menu + Motor/encoder + Motor data - Drive setting - Upread/free access Changeable in: - Drive setting
P121* Stator Resist 121	Function parameter for entering the stator resistance of a connected synchronous or induction motor. The value to be entered corresponds to the ohmic resistance of a winding phase at 20°C.	Init: 0 Min: 0 Max: 50000 Unit: mOhm Indices: - Type: O2	Menus: - Parameter menu + Motor/encoder + Motor data - Drive setting - Upread/free access Changeable in: - Drive setting
P122* Tot Leak React 122	Function parameter for entering the total leakage reactance of a connected induction motor. The value to be entered corresponds to the total leakage reactance of a winding phase. The parameter value is calculated during the automatic calculation of derived motor data (P115).	Init: 0 Min: 0 Max: 65535 Unit: mOhm Indices: - Type: O2	Menus: - Parameter menu + Motor/encoder + Motor data - Drive setting - Upread/free access Changeable in: - Drive setting
P123* Stator React 123	Function parameter for entering the stator reactance of a connected induction motor. The value to be entered corresponds to the stator reactance of a winding phase at 40% of the rated motor current. The parameter value is calculated during the automatic calculation of derived motor data (P115).	Init: 0,00 Min: 0,00 Max: 655,00 Unit: Ohm Indices: - Type: O2	Menus: - Parameter menu + Motor/encoder + Motor data - Drive setting - Upread/free access Changeable in: - Drive setting
P124* Rotor TimeConst 124	Function parameter for entering the rotor time constant of a connected induction motor. The parameter value is calculated during the automatic calculation of derived motor data (P115).	Init: 0 Min: 0 Max: 10000 Unit: ms Indices: - Type: O2	Menus: - Parameter menu + Motor/encoder + Motor data - Drive setting - Upread/free access Changeable in: - Drive setting
P127 R(Rot)Corr'nTmp 127	Parameter is not used.	Init: 70,0 Min: 12,5 Max: 400,0 Unit: % Indices: - Type: O2	Menus: - Parameter menu + Control/gating unit + Current control - Upread/free access Changeable in: - Drive setting
P128* Max Current 128	Function parameter for entering the maximum current (r.m.s. value of the fundamental component). The output current is limited to the value entered. The limitation of the output current serves to protect the connected motor. The maximum current that can be input is limited by converter current parameter P072. Any derating that may be necessary because of increased pulse frequency is not taken into account until r129. In function diagram 370.5	Init: 6,3 Min: 0,0 Max: 1000,0 Unit: A Indices: - Type: O2	Menus: - Parameter menu + Motor/encoder + Motor data - Drive setting - Upread/free access Changeable in: - Drive setting - Drive setting

Parameter	Description	Data	Read/write
r129 I(max,set) 129	Visualization parameter for displaying the actually effective maximum current (r.m.s. value of the fundamental component). If utilization of the converter or inverter exceeds 100 % (i2t calculation) or if the maximum-current limit has been reduced, the displayed value deviates from the value set in P128. The maximum current can be reduced, for example, by operation at a pulse frequency (P340) > 3kHz. In function diagram 370.5	Dec.Plc.: 1 Unit: A Indices: - Type: I2	Menus: - Parameter menu + Motor/encoder + Motor data - Drive setting - Upread/free access
P130* Select MotEncod 130	Function parameter for selecting the motor encoder. 0 = Automatic detection 1 = 2-pole resolver (SBR) 2 = Resolver with number of pole-pairs of motor (SBR) 3 = Encoder (sine-cosine encoder) (SBM) 4 = Multiturn encoder (SSI encoder, EQN encoder) (SBM) 5 = Pulse encoder in Slot C (SBP) 6 = Pulse encoder not in Slot C (SBP) 7 = Encoder without C/D track (SBM)* * The absolute start position will not be set by the encoder without C/D track. This encoder has to be used only with induction motors. If the reference pulse is connected the position will be adjusted by a ramp function. Induction motors 1PA6, 1PL6, 1PH4 and 1PH7 with encoder: these motors are generally delivered with an ERN1381 encoder without CD tracks. From firmware version V1.30 and higher, the encoder type P130 = 7 has been introduced (== encoder without CD tracks). If P130 = 3 (encoder with CD tracks e.g. ERN1387) is selected instead, fault F051 fault value 29 is generated (from V1.32: 25).	Init: 0 Min: 0 Max: 7 Unit: - Indices: - Type: O2	Menus: - Parameter menu + Motor/encoder + Motor data - Quick parameterization - Drive setting - Upread/free access Changeable in: - Drive setting
P131* Select TmpSensor 131	Selection of temperature sensor with which the motor temperature has to be monitored. Setting values: 0 = No sensor 1 = KTY84 (standard for ROTEC motors) 2 = PTC (Overtemperature will be noticed at > 2000 Ohm) 3 = PT100 (evaluation only possible for SBP)	Init: 1 Min: 0 Max: 3 Unit: - Indices: - Type: O2	Menus: - Parameter menu + Motor/encoder + Motor data - Drive setting - Upread/free access Changeable in: - Drive setting
P132* Angle Offset 132	Function parameter for entering the angle offset of the motor encoder. For synchronous motors the position of the encoder in relation to the rotor must be known. In order to be able to operate synchronous servo motors with an encoder adjustment which deviates from the setting for Siemens synchronous servo motors, the phase displacement angle must be entered. The offset must be entered in angular degrees. The correction acts on K186 (theta I controller) only. The actual position variable KK0090 shows a mechanical rotor position without regarding the adjusted angle offset in P132.	Init: 0,00 Min: -180,00 Max: 180,00 Unit: ° (alt) Indices: - Type: I2	Menus: - Parameter menu + Motor/encoder + Encoder data - Drive setting - Upread/free access Changeable in: - Drive setting - Ready
r133 Sine/Cos Res 133	Visualization parameter for displaying the non-linearized values of a connected resolver. The non-linearized values are formed after A/D conversion of the two measurement signals. A value of about 31000 corresponds to the usual output of the resolver with about 1.85V_rms at the output windings. In this case the excitation amounts to about 3.9V_rns. Index 1 = Sine track Index 2 = Cosine track	Dec.Plc.: 0 Unit: - Indices: 2 Type: I2	Menus: - Parameter menu + Motor/encoder + Encoder data - Upread/free access

Parameter	Description	Data	Read/write
P134* Config.Resolver 134	Parameter for configuration of resolver evaluation xxx0 = Pulse encoder simulation SBR2: 512 pulses per revolution, one zero pulse (1) xxx1 = Pulse encoder simulation SBR2: 1024 pulses per revolution, one zero pulse. A multipole resolver delivers several sine/cosine periods per revolution, thus multiplying the number of pulses and also the number of zero pulses by the number of pole pairs of the resolver.	Init: 1 Unit: - Indices: - Type: L2	Menus: - Parameter menu + Motor/encoder + Encoder data - Drive setting - Upread/free access Changeable in: - Drive setting
P135* SelExtEncDSP 135	Function parameter for selecting the external encoder 0 = automatic detection 3 = Encoder (sine/cosine encoder) (SBM2) 4 = Multiturn encoder (SSI encoder, EQN encoder) (SBM2)	Init: 0 Min: 0 Max: 7 Unit: - Indices: - Type: O2	Menus: - Parameter menu + Motor/encoder + Encoder data - Quick parameterization - Drive setting - Upread/free access Changeable in: - Drive setting
P136* Encoder Pulse # 136	Function parameter for entering the number of pulses of the encoder. The squared value which corresponds to the number of pulses of the encoder is to be entered. Special setting 0: Number of pulses in P144 Special setting 1: Without function! (Number of pulses in P144 and actual value is inverted. See description of P144.) Pulse number / Parameter 4 / 2 8 / 3 16 / 4 32 / 5 64 / 6 128 / 7 256 / 8 512 / 9 1024 / 10 2048 / 11 (preset value) 4096 / 12 8192 / 13 16384 / 14 Special setting: 2048 / 15 without evaluation of the zero pulse! In function diagram 240	Init: 11 Min: 0 Max: 15 Unit: - Indices: - Type: O2	Menus: - Parameter menu + Motor/encoder + Encoder data - Drive setting - Upread/free access Changeable in: - Drive setting
P137* Pulse ExtEncod 137	Function parameter for entering the encoder pulse number for the external encoder (only with SBM2 board). The maximum permissible entry value for the pulse number is 16000.	Init: 2048 Min: 60 Max: 60000 Unit: - Indices: - Type: O2	Menus: - Parameter menu + Motor/encoder + Encoder data - Drive setting - Upread/free access Changeable in: - Drive setting

Parameter	Description	Data	Read/write
P139* ConfSetpEnc 139	Function parameter for configuration of the setpoint encoder on an SBP. The setpoint encoder can either process one digital setpoint from two independent rectangular-shaped frequency signals or, alternatively, form one setpoint from an external pulse encoder signal and a rectangular-shaped frequency signal. xxx0 = channel 1 / encoder input HTL unipolar xxx1 = channel 1 / encoder input TTL unipolar xxx2 = channel 1 / encoder input HTL differential input xxx3 = channel 1 / encoder input TTL/RS422 differential input xx0x = channel 2 HTL unipolar xx1x = channel 2 TTL unipolar xx2x = channel 2 HTL differential input xx3x = channel 2 TTL/RS422 differential input x0xx = encoder with 5 V voltage supply x1xx = encoder with 15 V voltage supply 0xxx = setpoint encoder deactivated 1xxx = Frequency counter mode (frequency evaluation) 2xxx = Encoder signal evaluation mode	Init: 0 Unit: - Indices: - Type: L2	Menus: - Parameter menu + Motor/encoder + Encoder data - Board configuration - Drive setting - Upread/free access Changeable in: - Board configuration
P140* SetpEnc Pulse# 140	Function parameter for the pulse number of the setpoint encoder. The parameter has to be set to the number of pulses of the setpoint encoder connected to an SBP board. If the first frequency channel of the setpoint encoder is in the "encoder signal evaluation" mode (P139=2xxx), the parameter value is used for normalizing the setpoint generation (together with the motor ref. frequency).	index1: 1024 Min: 60 Max: 20000 Unit: - Indices: 2 Type: O2	Menus: - Parameter menu + Motor/encoder + Encoder data - Drive setting - Upread/free access Changeable in: - Drive setting - Drive setting
P141* SetpEncFreq 141	Function parameter for the reference frequency of the setpoint encoder. The parameter value determines which input frequency results in an output of 100% on the setpoint encoder. If the setpoint encoder is the "frequency counter" mode (P139=1xxx), the parameter values are used to normalize the output values.	index1: 10000 Min: 500 Max: 1000000 Unit: Hz Indices: 2 Type: O4	Menus: - Parameter menu + Motor/encoder + Encoder data - Drive setting - Upread/free access Changeable in: - Drive setting - Drive setting

Parameter	Description	Data	Read/write
P142* EncoderMonitSBM2 142	Function parameter for activating the monitoring and position correction functions of the encoder on the SBM2. Resolver Index 1: Resolver xxx0 = Position correction deactivated with zero pulse (1) xxx1 = Position correction activated with zero pulse: after the zero pulse has occurred, the pulse counter is synchronized step-by step with the zero position. Xx0x = Zero pulse monitoring deactivated (1) xx1x = Zero pulse monitoring activated: there must be one zero pulse each revolution, otherwise error F051, error value 27 (parameter 949) is triggered. X0xx = Aplitude monitoring A/B track deactivated (0) x1xx = Aplitude monitoring A/B track activated: When one track is at zero passage, the other must have the correct level 0xxx = A^2+B^2 Amplitude monitoring deactivated (1) 1xxx = A^2+B^2 Amplitude monitoring activated: resolver signal must lie within the specified value range of 0.1Vss to 1.2Vss, otherwise error F051, error value 29 (parameter 949) is triggered. External resolver Index 2: External resolver xxx0 = Position correction with zero pulse monitoring deactivated (1) xxx1 = Position correction with zero pulse activated: after the zero pulse has occurred, the pulse counter is corrected step-by step. Xx0x = Spare (0) xx1x = Spare x0xx = Amplitude moninoring A/B track deactivated (0) x1xx = Amplitude moninoring A/B track activated: The operating voltage must attain the value set in P145.2. Index 3: Resolver xxx0 = The starting position is not checked (1) xxx1 = The serial protocol must deliver the same starting position 6 times Index 4: External resolver xxx0 = The starting position is not checked (1) xxx1 = The serial protocol must deliver the same starting position 6 times	index1: 1011 Unit: - Indices: 4 Type: L2	Menus: - Parameter menu + Motor/encoder + Encoder data - Drive setting - Upread/free access Changeable in: - Drive setting
P143 Max Delta Pos 143	An upper limit for the position difference of the SSI protocol permissible between two samples can be set in this parameter. The value to be set depends on the resolution and speed of the resolver and on the time slot in which the protocol is evaluated. At a value of 0, the monitoring is switched off. Index 1: Spare Index 2: External resolver	index1: 0 Min: 0 Max: 65535 Unit: - Indices: 2 Type: O2	Menus: - Parameter menu - Upread/free access Changeable in: - Drive setting

Parameter	Description	Data	Read/write
P144* Pulse#MotEnc 144	Input of the encoder pulse number for the motor encoder. This parameter is active only if P136=0. P136 0 Use of pulse number parameter for motor control 1 Without function! Reserved for the use of inverse actual value for motor control ONLY during installation of the encoder at the output via a rigid coupling = > This arrangement serves to increase the stiffness upon large load inertia and resulting torsion.	Init: 2048 Min: 60 Max: 16000 Unit: - Indices: - Type: O2	Menus: - Parameter menu + Motor/encoder + Encoder data - Drive setting - Upread/free access Changeable in: - Drive setting
P145* Volts Enc SBM2 145	Setting for the voltage supply of an encoder if an SBM2 board is used. Index 1: Voltage supply for motor encoder Index 2: Voltage supply for machine encoder Irrespective of the parameterization, the maximum voltage for Compact PLUS units is 24 V and for Compact units 15 V. The value is entered in Volts.	index1: 5 Min: 5 Max: 25 Unit: - Indices: 2 Type: O2	Menus: - Parameter menu + Motor/encoder + Encoder data - Drive setting - Upread/free access Changeable in: - Drive setting
P146* ZeroPt Displace 146	Setting of zero point offset on multiturn absolute-value encoders. The zero point offset is entered in revolutions on the motor encoder and in increments on the external encoder. Index 1: Offset for motor encoder (in revolutions) Index 2: Offset for external encoder (in increments)	index1: 0 Min: -2147483647 Max: 2147483647 Unit: - Indices: 2 Type: I4	Menus: - Parameter menu + Motor/encoder + Encoder data - Drive setting - Upread/free access Changeable in: - Drive setting
P147* SelectMultiturn 147	Function parameter for entering the type of encoder. Setting is performed in the "Drive settings" menu and it configures the interface to a multiturn encoder. Index 1 Selection of the multiturn encoder as motor encoder. Index 2 Selection of the multiturn encoder as external encoder. This parameter carries out all the necessary settings for standard encoders and overwrites the parameters P148 and P149. On every change of P147, parameters P148 and P149 are pre-assigned with the settings for the type of encoder selected. 0 No standard encoder => Parameterization in P148, P149 by the user 1 EQN1325 => Messrs. Heidenhain 2 EQN1313 => Messrs. Heidenhain 3 SSI 25bit => Messrs. FRABA/Stegmann/TR/TWK etc 4 SSI 21bit => Messrs. FRABA/Stegmann/TR etc 5 SSI 13bit => Messrs. FRABA/Stegmann/TR/TWK etc 6: EnDat (Messrs. Heidenhain), data are read out of the encoder, e.g. LC181 linear scale. 7: EQI1325 (Messrs. Heidenhain)	index1: 1 Min: 0 Max: 7 Unit: - Indices: 2 Type: O2	Menus: - Parameter menu + Motor/encoder + Encoder data - Drive setting - Upread/free access Changeable in: - Drive setting

Parameter	Description	Data	Read/write
P148* Pulse#Multiturn 148	Function parameter for entering the resolution of the multiturn encoder. The resolution is indicated in bits. Index 01: Motor encoder resolution/rev. Index 02: Motor encoder number of revolutions Index 03: External encoder resolution /rev. or of linear axis Index 04: External encoder number of revolutions Index 05: Resolution ratio opt. signal period ser. protocol (linear scale of motor encoder) (spare), not yet supported in V1.40. Index 06: Resolution ratio opt. signal period resolution of ser. protocol (linear scale of external encoder), not supported in V1.40. Indices 1..4: Resolution in bits on SSI encoder No. of pulses on incremental encoders — Parameter value Revolutions on multiturn encoders — (presetting) 1 — 0 2 — 1 4 — 2 8 — 3 16 — 4 32 — 5 64 — 6 128 — 7 256 — 8 512 — 9 1024 — 10 2048 — 11 (Singleturn motor encoder) 4096 — 12 (Multiturn motor and external encoder) 8192 — 13 (Singleturn external encoder) 16384 — 14 32768 — 15 64536 — 16 (max. value for rotary encoder) : — : : — : 2147483648 — 31 4294968296 — 32 (max. value for linear scale) Indices 5 to 6 (for linear scales only, not yet supported in V1.40)! Scaling ratio between resolution of sine/cosine tracks and resolution (length of one increment) of the serial protocol (see data sheet of the encoder concerned). Example: linear scale LC 181 (Heidenhain): Signal period opt. tracks 16µm Resolution ser. protocol 0.1µm => division ratio P148.6 = 160	index1: 11 Min: 0 Max: 500 Unit: - Indices: 6 Type: O2	Menus: - Parameter menu + Motor/encoder + Encoder data - Drive setting - Upread/free access Changeable in: - Drive setting

Parameter	Description	Data	Read/write
P149* Conf Protocol 149	Function parameter for describing the serial protocol of code encoders Settings of motor encoder Index 01: General baud rate, SSI/EnDat) (101) xxx0 = SSI encoder xxx1 = EnDat encoder xx0x = Baud rate 100kHz up to 150m / encoder data sheet xx1x = Baud rate 500kHz up to 100m xx2x = Baud rate 1MHz up to 50m xx3x = Baud rate 2MHz up to 10m x0xx = Encoder without incremental tracks x1xx = Motor encoder with incremental tracks monitoring of pulse counter by serial protocol 0xxx = Rotary encoder Index 02/08: xxzz = zz = Number of protocol bits (EnDat) x0xx = Read position value (EnDat) x3xx = Write parameter (EnDat) x4xx = Read parameter (EnDat) xAxx = Self-start-up EnDat xBxx = Write zero point offset - encoder EEPROM (EnDat) Adopts the parameter in encoder EEPROM Index 03/09: xxxz = z = Number of non-significant leading zero bits (SSI) xx0x = Digital data (SSI) xx1x = Gray-coded data (SSI) x0xx = No alarm bit (SSI) xzxx = Position of alarm bit after last data bit (SSI) 0xxx = No parity bit (SSI) 1xxx = Parity bit (SSI) Index 04: MRS Code (Memory area, EnDat encoder only) zzzz = MRS code (memory area selection) (EnDat) AF = Memory area for customer parameters xx = Afer EnDat specification/encoder data sheet Index 05: Parameter address (EnDat encoder only) zzzz = Parameter address (EnDat) O..F = memory area for customer parameter xxxx = After EnDat specification/encoder data sheet Index 06: Parameter value (EnDat encoder only) zzzz = Parameter value (EnDat) Parameter value after MRS code and address Index 07: Settings of external encoders (000) xxx0 = SSI encoder xxx1 = EnDat endoder xx0x = Baud rate 100kHz to 150m / encoder Data sheet xx1x = Baud rate 500kHz to 100m xx2x = Baud rate 1MHz to 50m xx3x = Baud rate 2MHz to 10m x0xx = Encoder without incremental tracks x1xx = Evaluation of incremental tracks 0xxx = Rotary encoder 1xxx = Linear measure	index1: 101 Unit: - Indices: 12 Type: L2	Menus: - Parameter menu + Motor/encoder + Encoder data - Drive setting - Upread/free access Changeable in: - Drive setting

Parameter	Description	Data	Read/write
	Index 08: Protocol setup EnDat (0) xxzz = zz = Number of protocol bits (EnDat) x0xx = Read position value (EnDat) x3xx = Read parameter (EnDat) x4xx = Write parameter (EnDat) xAxx = Self-start-up EnDat xBxx = Write zero point offset - encoder EEPROM (EnDat) Adopts the parameter in encoder EEPROM Index 09: Protocol setup SSI (10) xxxz = z = Number of non-significant leading zero bits (SSI) xx0x = Binary data (SSI) xx1x = Gray-coded datat (SSI) x0xx = No alarm bit (SSI) xzxx = Posittion of alarm bit after last data bit (SSI) 0xxx = No parity bit (SSI) 1xxx = Parity bit (SSI) Index 10: MRS code (memory area, only EnDat encoder) (0) zzzz = MRS code (memory area selection) (EnDat) AF = Memory area for customer parameters xx = After EnDat specification/encoder data sheet Index 11: Parameter address (only EnDat encoder) (0) zzzz = Parameter address (EnDat) 0..F = Memory area for customer parameter xxxx = After EnDat specification/encloder data sheetr Index 12: Parameter value (only EnDat encoder) (0) zzzz = Parameter value (EnDat) Parameter value after MRS code and address		
P150* SBP Config 150	Function parameter for configuring the SBP pulse encoder board. Index 01: Motor encoder (SBP in slot C) Index 02: Machine encoder xxx0 = A/B tracks HTL unipolar xxx1 = A/B tracks TTL unipolar xxx2 = A/B tracks HTL differential input xxx3 = A/B tracks TTL/RS422 differential input xx0x = Zero track HTL unipolar xx1x = Zero track TTL unipolar xx2x = Zero track HTL differential input xx3x = Zero track TTL/RS422 differential input x0xx = Encoder mit 5 V voltage supply x1xx = Encoder mit 15 V voltage supply	index1: 0 Unit: - Indices: 2 Type: L2	Menus: - Parameter menu + Motor/encoder + Encoder data - Drive setting - Upread/free access Changeable in: - Drive setting
P151* Pulse # 151	Function parameter for entering the number of pulses of the pulse encoder. Index 01: Motor encoder (SBP in Slot C) Index 02: Machine encoder	index1: 1024 Min: 60 Max: 32767 Unit: - Indices: 2 Type: O2	Menus: - Parameter menu + Motor/encoder + Encoder data - Drive setting - Upread/free access Changeable in: - Drive setting

Parameter	Description	Data	Read/write
P152* extEnAVWF(befDP) 152	Function parameter for entering the weighting factor for the actual position of the externel encoder. With the help of the actual-value weighting factor, the actual position measured can be converted to another reference system. The parameter value entered is an integral value representing the component of the actual-value weighting factor. The real weighting-factor of the actual value is obtained by adding P152 to (P153 / 100000000). Example: P152 = 5, P153 = 10000000 from which follows: Actual-value weighting factor = 5.1 In function diagram 335.3	index1: 1 Min: 0 Max: 999 Unit: - Indices: 2 Type: O2	Menus: - Parameter menu + Control/gating unit + Position control - Drive setting - Upread/free access Changeable in: - Drive setting - Drive setting
P153* extEnAVWF(aftDP) 153	Function parameter for entering the evaluation factor for the position actual value for the external encoder. With the aid of the actual-value evaluation factor, the measured position actual value can be converted to another reference system. The entered parameter value represents the broken component of the actual-value evaluation factor. The actual evaluation factor is calculated from the total of P152+(P153 / 100000000). The broken component is entered as 8 digits. This results in an accuracy of 8 positions after the decimal point for the actual-value evaluation factor. Example: P152 = 5, P153=00000321 results in: actual-value evaluation factor=5.00000321 In function diagram 335.3	index1: 0 Min: 0 Max: 99999999 Unit: - Indices: 2 Type: O4	Menus: - Parameter menu + Control/gating unit + Position control - Drive setting - Upread/free access Changeable in: - Drive setting - Drive setting
P154* FineResExtEnc 154	Function parameter for determining the fine resolution of the external encoder. The number of bits which are to contain the fine-resolution information are input. The position actual-value is expanded from the right by this information. For this, the incoming rough position is pushed to the left by the number of bits, and the fine-resolution bits are assumed according to the position actual-value. If an encoder or multiturn encoder with incremental tracks (e.g. EQN1325) is used as an external encoder in conjunction with an SMB2 as an evaluation board, fine resolution is available. If another encoder or evaluation board is used, the value zero is generally assumed as the fine-resolution portion of the position.	Init: 0 Min: 0 Max: 30 Unit: - Indices: - Type: O2	Menus: - Parameter menu - Drive setting - Upread/free access Changeable in: - Drive setting - Drive setting
P155* SrcPosSetVMEncod 155	BICO parameter for selecting the connector from which the position setting value is to be read in.	index1: 0 Unit: - Indices: 2 Type: L2 ,K ,K	Menus: - Parameter menu + Control/gating unit + Position control - Upread/free access Changeable in: - Drive setting
P156* SrcSetPosMEncod 156	BICO parameter for selecting the binector from which the command for setting the actual position is to be read in.	index1: 0 Unit: - Indices: 2 Type: L2 ,B	Menus: - Parameter menu + Control/gating unit + Position control - Upread/free access Changeable in: - Drive setting

Parameter	Description	Data	Read/write
P157* SrcPosCorrVMEnc 157	BICO parameter for selecting the connector from which the corrected position value is to be read in.	index1: 0 Unit: - Indices: 2 Type: L2 ,K ,K	Menus: - Parameter menu + Control/gating unit + Position control - Upread/free access Changeable in: - Drive setting
P158* SrcCorrPosMEnc 158	BICO parameter for selecting the binectors from which the commands for correcting the actual position are to be read in. Index 1: Addition of the corrected value Index 2: Subtraction of the corrected value	index1: 0 Unit: - Indices: 4 Type: L2 ,B	Menus: - Parameter menu + Control/gating unit + Position control - Upread/free access Changeable in: - Drive setting
P159* SrcRefSetVMEnc 159	BICO parameter for selecting the connector from which the actual position is to be read in during the Reference-Point Detection operating mode.	index1: 0 Unit: - Indices: 2 Type: L2 ,K ,K	Menus: - Parameter menu + Control/gating unit + Position control - Upread/free access Changeable in: - Drive setting
P160* SrcRelRefMEncod 160	BICO parameter for selecting the binector from which the command for releasing the Reference-Point Detection operating mode is to be read in.	index1: 0 Unit: - Indices: 2 Type: L2 ,B	Menus: - Parameter menu + Control/gating unit + Position control - Upread/free access Changeable in: - Drive setting
P162* SrcRelMVlMemMEn c 162	BICO parameter for selecting the binector from which the command for releasing the measured-value memory is to be read in.	index1: 0 Unit: - Indices: 2 Type: L2 ,B	Menus: - Parameter menu + Control/gating unit + Position control - Upread/free access Changeable in: - Drive setting
r163 MeasValStore 163	Visualization parameter for displaying the measured value memory for the external machine encoder.	Dec.Plc.: 0 Unit: - Indices: - Type: I4	Menus: - Parameter menu + Control/gating unit + Position control - Upread/free access

Parameter	Description	Data	Read/write
P166* ConfPosSensMEnc 166	Function parameter for configuring the operating modes "Position detection" and "Reference point detection" for the external encoder. xxx0 = Position detection not enabled xxx1 = Position detection enabled An external encoder must be present for enabling external position detection. xx0x = Reference point detection not enabled xx1x = Reference point detection, first fine pulse on the right of the rough pulse xx2x = Reference point detection, first fine pulse on the left of the rough pulse xx3x = Reference point detection only fine pulse x0xx = Clockwise rotation of encoder x1xx = Anticlockwise rotation of the encoder (reversing) Changeover from the "Position detection" operating mode to the "Reference point detection" operating mode is made by the command "Enable reference point detection" (P159) 0xxx = Position-feedback scaling factor as decimal fraction in parameter P0152 (to the left of the decimal point) anf P0152 (to the right of the decimal point). 1xxx = Position-feedback scaling factor as fraction with numerator P0181.1 and denominator P0181.2 Index 2: xxx0 = No account taken of the zero point offset of an encoder (KK0088) xxx1 = Addition of the zero point offset of an encoder to an SBM2 for actual value (corresponds to referencing on the fly)	index1: 0 Unit: - Indices: 2 Type: L2	Menus: - Parameter menu + Control/gating unit + Position control - Upread/free access Changeable in: - Drive setting
P167* SrcPosOffsetMEnc 167	BICO parameter for selecting the connector from which the offset for correcting the actual position generated by the position detection is to be read in.	index1: 0 Unit: - Indices: 2 Type: L2 ,K ,K	Menus: - Parameter menu + Control/gating unit + Position control - Upread/free access Changeable in: - Drive setting
r168 Pos (act,MachEn) 168	Visualization parameter for displaying the position actual-value calculated by the position detection of the machine encoder	Dec.Plc.: 0 Unit: - Indices: - Type: I4	Menus: - Parameter menu + Control/gating unit + Position control - Upread/free access
P169* extEnAVWF(befDP) 169	Function parameter for entering the weighting factor for the actual position of the externel encoder. With the help of the actual-value weighting factor, the actual position measured can be converted to another reference system. The parameter value entered is an integral value representing the component of the actual-value weighting factor. The real weighting-factor of the actual value is obtained by adding P152 to (P153 / 100000000). Example: P152 = 5, P153 = 10000000 from which follows: Actual-value weighting factor = 5.1 In function diagram 335.3	Init: 1 Min: 0 Max: 999 Unit: - Indices: - Type: O2	Menus: - Parameter menu + Control/gating unit + Position control - Drive setting - Upread/free access Changeable in: - Drive setting - Drive setting

Parameter	Description	Data	Read/write
P170* extEnAVWF(aftDP) 170	Function parameter for entering the weighting factor for the actual position. With the help of the actual-value weighting factor, the actual position measured can be converted to another reference system. The parameter value entered represents the fractional component of the actual-value weighting factor. The real weighting factor of the actual value is obtained by adding P169 to (P170/100000000). The fractional component is entered to 8 decimal points. The actual-value weighting factor is thus accurate to 8 decimal places. Example: Position-feedback scaling factor: 5.00321 Input P169 = 5, P170 = 00321000 Position-feedback scaling factor: 2.00000123 Input P169 = 2, P170 = 00000123 Position-feedback scaling factor: 0.5 Input P169 = 0, P170 = 50000000 Note: The following zeroes (P170) must be input. In function diagram 330.3	Init: 0 Min: 0 Max: 99999999 Unit: - Indices: - Type: O4	Menus: - Parameter menu + Control/gating unit + Position control - Drive setting - Upread/free access Changeable in: - Drive setting - Drive setting
P171* Pos Resolution 171	Function parameter for defining the position resolution. This parameter defines the resolution with which the position measured at the motor encoder is provided for further processing. The number of increments is set which is to correspond to one mechanical revolution. The squared value is to be entered as the parameter value. Inc./Rev. Parameter value 512 9 1024 10 2048 11 4096 12 (preset value) . . . 536870912 29 1073741824 30 Example: P171=12 After one mechanical revolution, the conditioned actual position value is 00001000H. In function diagram: 330.3	Init: 12 Min: 9 Max: 30 Unit: - Indices: - Type: O2	Menus: - Parameter menu + Control/gating unit + Position control - Upread/free access Changeable in: - Drive setting
P172* Src Pos SetV 172	BICO parameter for selecting the connector from which the position setting value is to be read in.	Init: 0 Unit: - Indices: - Type: L2 ,K ,K	Menus: - Parameter menu + Control/gating unit + Position control - Upread/free access Changeable in: - Drive setting
P173* Src Set Position 173	BICO parameter for selecting the binector from which the command for setting the actual position is to be read in.	Init: 302 Unit: - Indices: - Type: L2 ,B	Menus: - Parameter menu + Control/gating unit + Position control - Upread/free access Changeable in: - Drive setting
P174* Src PosCorr'nV 174	BICO parameter for selecting the connector from which the corrected position value is to be read in.	Init: 0 Unit: - Indices: - Type: L2 ,K ,K	Menus: - Parameter menu + Control/gating unit + Position control - Upread/free access Changeable in: - Drive setting

Parameter	Description	Data	Read/write
P175* Src Pos Corr'n 175	BICO parameter for selecting the binectors from which the commands for correcting the actual position are to be read in. Index 1: Addition of the corrected value Index 2: Subtraction of the corrected value	index1: 303 Unit: - Indices: 2 Type: L2 ,B	Menus: - Parameter menu + Control/gating unit + Position control - Upread/free access Changeable in: - Drive setting
P176* Src Ref SetV 176	BICO parameter for selecting the connector from which the actual position is to be read in during the Reference-Point Detection operating mode.	Init: 0 Unit: - Indices: - Type: L2 ,K ,K	Menus: - Parameter menu + Control/gating unit + Position control - Upread/free access Changeable in: - Drive setting
P177* Src Release Ref 177	BICO parameter for selecting the binector from which the command for releasing the Reference-Point Detection operating mode is to be read in.	Init: 307 Unit: - Indices: - Type: L2 ,B	Menus: - Parameter menu + Control/gating unit + Position control - Upread/free access Changeable in: - Drive setting
P178* Src Rough Pulse 178	BICO parameter for selecting the binector from which the rough pulse is to be read in during the Reference-Point Detection operating mode.	Init: 0 Unit: - Indices: - Type: L2 ,B	Menus: - Parameter menu + Control/gating unit + Position control - Upread/free access Changeable in: - Drive setting
P179* SrcRelMValVolts 179	BICO parameter for selecting the binector from which the command for releasing the measured-value memory is to be read in.	Init: 308 Unit: - Indices: - Type: L2 ,B	Menus: - Parameter menu + Control/gating unit + Position control - Upread/free access Changeable in: - Drive setting
P180* AVWF.Num/Denom 180	The parameter defines the actual value weighting factor as a fraction with numerator and denominator. This makes sense with rotational axes whenever the position-feedback scaling factor, consisting of digits before and after the decimal point cannot be displayed with 8 decimal places. Parameter P183 is used for selecting between input of the position-feedback scaling factor in decimal form with digits before and after the decimal point and input of a fraction with numerator and denominator. Index 1: Numerator Index 2: Denominator In function diagram 330.3	index1: 1 Min: 0 Max: 2147483647 Unit: - Indices: 2 Type: I4	Menus: - Parameter menu + Control/gating unit + Position control - Drive setting - Upread/free access Changeable in: - Drive setting - Drive setting

Parameter	Description	Data	Read/write
P181* extEnAVWF.NumDe 181	The parameter defines the actual value weighting factor (AVWF) of the external encoder as fraction with numerator and denominator. This makes sense with rotational axes whenever the position-feedback scaling factor, consisting of digits before and after the decimal point cannot be displayed with 8 decimal places. Parameter P166 is used for selecting between input of the actual value weighting factor for the external encoder in decimal form with digits before and after the decimal point and input of a fraction with numerator and denominator. Index 1: Numerator Index 2: Denominator In function diagram 335.3	index1: 1 Min: 0 Max: 2147483647 Unit: - Indices: 2 Type: I4	Menus: - Parameter menu + Motor/encoder + Encoder data + Control/gating unit + Position control - Drive setting - Upread/free access Changeable in: - Drive setting - Drive setting
P182* Src Angle Pos 182	This parameter defines the source connector for the position actual value detection for the motor encoder in slot C. The connector can be connected both to the rotor position (KK90) and to the angle of the machine encoder (KK104). If the motor encoder is a multi-pole resolver and it is also to be used for referencing with a proximity switch and zero pulse, KK96 has to be connected up to position sensing (P182) instead of KK90. The multi-pole resolver supplies quasi Zp zero pulses per mechanical revolution. The number of pole pairs also has to be taken into account in the denominator of the IBF factor (P180.2) - see P109 or the Compendium - in order to compensate for the higher resolution of KK96.	Init: 90 Unit: - Indices: - Type: L2 ,K ,K	Menus: - Parameter menu + Control/gating unit + Position control - Drive setting - Upread/free access Changeable in: - Drive setting

Parameter	Description	Data	Read/write
P183* Conf Pos Sensing 183	Function parameter for configuring the Position Detection and Reference-Point Detection operating modes. Index 1: xxx0 = disables the position detection xxx1 = enables the position detection for resolver or encoder xxx2 = enables the position detection for multiturn encoder xx0x = Reference-Point Detection not released xx1x = Reference-Point Detection to the right of the rough pulse xx2x = Reference-Point Detection to the left of the rough pulse The changeover from the Position Detection mode to the Reference-Point Detection mode is made by means of the command "Release Reference-Point Detection " (P177). X1xx = Inversion of the counting direction for position detection. Parameterization is only necessary for the following special case: position detection is by means of an external encoder (sin/cos encoder or multiturn encoder). Position evaluation is to be by means of the fast postion detection for the motor encoder (P182=104, P135=3/4). If the direction of rotation of motor and encoder is different in this configuration, the x1xx parameter value must be set. 0xxx = position-feedback scaling factor as decimal fraction in parameter P0169 (places before the decimal point) and P0170 (places after the decimal point) 1xxx = position-feedback scaling factor as fraction with numerator P0180.1 and denominator P0180.2. Index 2: xxx0 = No account is taken of the zero point offset of an encoder (KK0089) xxx1 = Addition of the zero point offset of an encoder to an SBM2 for actual position value (corresponds to referencing on the fly) xx0x = Reference point detection: The position is set to the value of source P176. xx1x = Reference point detection: The position is measured and output at KK124.	index1: 11 Unit: - Indices: 2 Type: L2	Menus: - Parameter menu + Control/gating unit + Position control - Upread/free access Changeable in: - Drive setting
P184* Src Pos Offset 184	BICO parameter for selecting the connector from which the offset for correcting the actual position generated by the position detection is to be read in.	Init: 0 Unit: - Indices: - Type: L2 ,K ,K	Menus: - Parameter menu + Control/gating unit + Position control - Upread/free access Changeable in: - Drive setting
r185 Pos (act Mot) 185	Visualization parameter for displaying the actual position determined by the position detection. Index 1: Actual position value Index 2: Actual position value with offset	Dec.Plc.: 0 Unit: - Indices: 2 Type: I4	Menus: - Parameter menu + Control/gating unit + Position control - Upread/free access
r186 MeasValStore 186	Index 1: measurement Index 2: measurement with offset	Dec.Plc.: 0 Unit: - Indices: 2 Type: I4	Menus: - Parameter menu + Control/gating unit + Position control - Upread/free access

Parameter	Description	Data	Read/write
P187* TimeSlot PosSetp 187	Parameter for entering the time slot in which the connector softwired in Src Position Setpoint P190 is generated. (Analogous to U060 Sample&Hold element Parameter for entering the slower time slot)	Init: 2 Min: 2 Max: 10 Unit: - Indices: - Type: O2	Menus: - Parameter menu + Free blocks - Upread/free access Changeable in: - Drive setting
P188* Offset RotorPos 188	This parameter enables an offset between the mechanical rotor position and the rotor position used for position sensing to be set. The offset is used during referencing if the rotor zero position falls together with the negative edge of the rough pulse.	Init: 0,000 Min: -200,000 Max: 199,999 Unit: - Indices: - Type: I4	Menus: - Parameter menu - Upread/free access Changeable in: - Drive setting - Ready
r189 RotorPosBeroEdge 189	The parameter outputs the measured rotor position at the negative flank of the rough pulse.	Dec.Plc.: 3 Unit: - Indices: - Type: I4	Menus: - Parameter menu + Control/gating unit + Position control - Upread/free access
P190* Src Pos Setp 190	BICO parameter for selecting the connector from which the setpoint for the position controller is to be read in.	index1: 310 Unit: - Indices: 2 ,BDS Type: L2 ,K ,K	Menus: - Parameter menu + Control/gating unit + Position control - Upread/free access Changeable in: - Drive setting
P191* Smooth Pos Set 191	Function parameter for entering the smoothing time constant for the position setpoint.	index1: 0,0 Min: 0,0 Max: 1000,0 Unit: ms Indices: 4 ,FDS Type: O2	Menus: - Parameter menu + Control/gating unit + Position control - Upread/free access Changeable in: - Drive setting - Ready
P192* Src SetV PosSet 192	BICO parameter for selecting the connector from which the setting value for position-setpoint smoothing is to be read in.	index1: 0 Unit: - Indices: 2 ,BDS Type: L2 ,K ,K	Menus: - Parameter menu + Control/gating unit + Position control - Upread/free access Changeable in: - Drive setting
P193* Src Set PosSet 193	BICO parameter for selecting the binector from which the command for setting position-setpoint smoothing is to be read in.	index1: 0 Unit: - Indices: 2 ,BDS Type: L2 ,B	Menus: - Parameter menu + Control/gating unit + Position control - Upread/free access Changeable in: - Drive setting
P194* Src Pos ActV 194	BICO parameter for selecting the connector from which the actual value for the position controller is to be read in.	index1: 120 Unit: - Indices: 2 ,BDS Type: L2 ,K ,K	Menus: - Parameter menu + Control/gating unit + Position control - Upread/free access Changeable in: - Drive setting
P195* Smooth Pos Act 195	Function parameter for entering the smoothing time constant for the actual position.	index1: 0,0 Min: 0,0 Max: 1000,0 Unit: ms Indices: 4 ,FDS Type: O2	Menus: - Parameter menu + Control/gating unit + Position control - Upread/free access Changeable in: - Drive setting - Ready

Parameter	Description	Data	Read/write
P196* Src SetV PosAct 196	BICO parameter for selecting the connector from which the setting value for smoothing of the actual position is to be read in.	index1: 0 Unit: - Indices: 2 ,BDS Type: L2 ,K ,K	Menus: - Parameter menu + Control/gating unit + Position control - Upread/free access Changeable in: - Drive setting
P197* Src Set PosAct 197	BICO parameter for selecting the binector from which the command for setting smoothing of the actual position is to be read in.	index1: 0 Unit: - Indices: 2 ,BDS Type: L2 ,B	Menus: - Parameter menu + Control/gating unit + Position control - Upread/free access Changeable in: - Drive setting
r198 PosActSetp Diff 198	Visualization parameter for displaying the deviation (actual/setpoint difference) of the position controller.	Dec.Plc.: 0 Unit: - Indices: - Type: I4	Menus: - Parameter menu + Control/gating unit + Position control - Upread/free access
P199* Smooth Pos Diff 199	Function parameter fo entering the smoothing time constant for the devation (actual/setpoint difference) of the position controller.	index1: 0,0 Min: 0,0 Max: 1000,0 Unit: ms Indices: 4 ,FDS Type: O2	Menus: - Parameter menu + Control/gating unit + Position control - Upread/free access Changeable in: - Drive setting - Ready
r200 Pos Setp PosReg 200	Visualization parameter for displaying the position setpoint directly at the input of the position controller.	Dec.Plc.: 0 Unit: - Indices: - Type: I4	Menus: - Parameter menu + Control/gating unit + Position control - Upread/free access
r201 Pos ActV PosReg 201	Visualization parameter for displaying the actual position directly at the input of the position controller.	Dec.Plc.: 0 Unit: - Indices: - Type: I4	Menus: - Parameter menu + Control/gating unit + Position control - Upread/free access
P202* SrcPosRegLim 202	BICO parameter for selecting the connector from which the output limitation of the position controller is to be read in.	index1: 134 Unit: - Indices: 2 ,BDS Type: L2 ,K ,K	Menus: - Parameter menu + Control/gating unit + Position control - Upread/free access Changeable in: - Drive setting
P203* Src PosRegAdapt 203	BICO parameter for selecting the connector from which the input signal for gain adaptation of the position controller is to be read in.	index1: 1 Unit: - Indices: 2 ,BDS Type: L2 ,K	Menus: - Parameter menu + Control/gating unit + Position control - Upread/free access Changeable in: - Drive setting
P204 Pos Reg Kv 204	Function parameter for entering the Kv factor for the position controller in [mm/min]/[µm]	index1: 0,100 Min: 0,000 Max: 20,000 Unit: - Indices: 4 ,FDS Type: O2	Menus: - Parameter menu + Control/gating unit + Position control - Upread/free access Changeable in: - Drive setting - Ready

Parameter	Description	Data	Read/write
P205* V rat 205	Rated speed for position control. At this parameter the speed resulting at 100 % speed actual-value of the motor has to be indicated. The unit is 1000(LE/min), preferably (mm/min). The factory setting value refers to a motor with 3000 (rpm) and an actual value weighting factor of 1.0. In function diagram 340.3	Init: 12288 Min: 1 Max: 2000000000 Unit: - Indices: - Type: O4	Menus: - Parameter menu + Control/gating unit + Position control - Upread/free access Changeable in: - Drive setting
P206* Pos Reg Time 206	Function parameter for entering the reset time of the position controller. 0 = Position controller works as a P controller >0 = Position controller works as a PI controller	index1: 0 Min: 0 Max: 10000 Unit: ms Indices: 4 ,FDS Type: O2	Menus: - Parameter menu + Control/gating unit + Position control - Upread/free access Changeable in: - Drive setting - Ready
P207* PosRegLimitFix 207	Function parameter for entering the position controller limits. The absolute amount to which the output of the position controller is to be limited. The limitation is effective both in a positive and a negative direction.	index1: 100,0 Min: 0,0 Max: 199,9 Unit: % Indices: 4 ,FDS Type: O2	Menus: - Parameter menu + Control/gating unit + Position control - Upread/free access Changeable in: - Drive setting - Ready
r208 PosRegGain(act) 208	Actually active KP factor of the position controller with the influencing variables Kv factor, Kv adaption, AVWF and rated speed. With this factor the deviation of the position control is multiplied. The KP factor additionally includes conversion of the normalization to the internal % representation. KP = (AVWF * Kv)/Vrat *4000 0000h (corresponds to 100 %) AVWF = Actual value weighting factor (in german: IBF) Kv = Gain of position control loop Vrat = rated speed In function diagram 340.4	Dec.Plc.: 0 Unit: - Indices: - Type: I4	Menus: - Parameter menu + Control/gating unit + Position control - Upread/free access
P209* Src PRE PosReg 209	Parameter for selecting the connector which supplies the speed pre-control value. This usually comes from the technology, synchronous operation or positioning.	index1: 312 Unit: - Indices: 2 ,BDS Type: L2 ,K ,K	Menus: - Parameter menu + Control/gating unit + Position control - Upread/free access Changeable in: - Drive setting
P210* Src 1 Rel PosReg 210	BICO parameter for selecting the binector from which the 1st command for releasing the position controller is to be read in.	index1: 0 Unit: - Indices: 2 ,BDS Type: L2 ,B	Menus: - Parameter menu + Control/gating unit + Position control - Upread/free access Changeable in: - Drive setting
P211* Src2 Rel PosReg 211	BICO parameter for selecting the binector from which the2nd command for releasing the position controller is to be read in.	index1: 104 Unit: - Indices: 2 ,BDS Type: L2 ,B	Menus: - Parameter menu + Control/gating unit + Position control - Upread/free access Changeable in: - Drive setting

Parameter	Description	Data	Read/write
P212* Src Ctrl Setp 212	BICO parameter for selecting the connector from which the motor speed for the Control operating mode of the position controller is to be read in.	index1: 311 Unit: - Indices: 2 ,BDS Type: L2 ,K ,K	Menus: - Parameter menu + Control/gating unit + Position control - Upread/free access Changeable in: - Drive setting
P213* Src Release Ctrl 213	BICO parameter for selecting the binector from which the command for releasing the Control operating mode for the position controller is to be read in.	index1: 305 Unit: - Indices: 2 ,BDS Type: L2 ,B	Menus: - Parameter menu + Control/gating unit + Position control - Upread/free access Changeable in: - Drive setting
r214 Pos Reg Output 214	Visualization parameter for displaying the speed setpoint at the position controller output.	Dec.Plc.: 3 Unit: % Indices: - Type: I4	Menus: - Parameter menu + Control/gating unit + Position control - Upread/free access
P220* Src n(set) 220	BICO parameter for selecting the connector from which the setpoint for the speed controller is to be read in.	index1: 75 Unit: - Indices: 2 ,BDS Type: L2 ,K ,K	Menus: - Parameter menu + Control/gating unit + Speed control - Upread/free access Changeable in: - Drive setting
P221 Smooth n(set) 221	Function parameter for entering the smoothing time constant for the speed setpoint.	index1: 0,0 Min: 0,0 Max: 100,0 Unit: ms Indices: 4 ,FDS Type: O2	Menus: - Parameter menu + Control/gating unit + Speed control - Upread/free access Changeable in: - Drive setting - Ready
P222* Src n(act) 222	Input connector for the actual speed. BICO parameter for selecting the connector from which the actual value for the speed controller is to be read in.	Init: 91 Unit: - Indices: - Type: L2 ,K ,K	Menus: - Parameter menu + Control/gating unit + Speed control - Upread/free access Changeable in: - Drive setting
P223 Smooth n(act) 223	Function parameter for entering the smoothing time constant for the actual speed.	Init: 0,0 Min: 0,0 Max: 100,0 Unit: ms Indices: - Type: O2	Menus: - Parameter menu + Control/gating unit + Speed control - Upread/free access Changeable in: - Drive setting - Ready
P224* Src 1 n(set/act) 224	BICO parameter for selecting the connector from which the 1st signal for calculating the difference (actual/setpoint difference) for the speed controller is to be read in. The connected signal is treated as a setpoint and added to the other signals. Preferably, additional setpoints, pre-control values or the droop (KK0157) are connected.	index1: 0 Unit: - Indices: 2 ,BDS Type: L2 ,K ,K	Menus: - Parameter menu + Control/gating unit + Speed control - Upread/free access Changeable in: - Drive setting
P225* Src2 n(set/act) 225	BICO parameter for selecting the connector from which the 2nd signal for calculating the difference (actual/setpoint difference) for the speed controller is to be read in. The connected signal is treated as a setpoint and added to the other signals.	index1: 150 Unit: - Indices: 2 ,BDS Type: L2 ,K ,K	Menus: - Parameter menu + Control/gating unit + Speed control - Upread/free access Changeable in: - Drive setting

Parameter	Description	Data	Read/write
P226* Src3 n(set/act) 226	BICO parameter for selecting the connector from which the 3rd signal for calculating the difference (actual/setpoint difference) for the speed controller is to be read in. The connected signal is treated as an actual value and subtracted from the other signals.	index1: 151 Unit: - Indices: 2 ,BDS Type: L2 ,K ,K	Menus: - Parameter menu + Control/gating unit + Speed control - Upread/free access Changeable in: - Drive setting
P227* Src4 n(set/act) 227	BICO parameter for selecting the connector from which the 4th signal for calculating the difference (actual/setpoint difference) for the speed controller is to be read in. The connected signal is treated as an actual value and subtracted from the other signals.	index1: 0 Unit: - Indices: 2 ,BDS Type: L2 ,K ,K	Menus: - Parameter menu + Control/gating unit + Speed control - Upread/free access Changeable in: - Drive setting
P228* Src n(Deviation) 228	BICO parameter for selecting the connector from which the deviation (actual/setpoint difference) for the speed controller is to be read in.	index1: 152 Unit: - Indices: 2 ,BDS Type: L2 ,K ,K	Menus: - Parameter menu + Control/gating unit + Speed control - Upread/free access Changeable in: - Drive setting
r229 n (Setp Smooth) 229	Visualization parameter for displaying the smoothed speed setpoint.	Dec.Plc.: 2 Unit: 1/min Indices: - Type: I4	Menus: - Parameter menu + Control/gating unit + Speed control - Upread/free access
r230 n (ActV Smooth) 230	Visualization parameter for displaying the smoothed speed actual value.	Dec.Plc.: 2 Unit: 1/min Indices: - Type: I4	Menus: - Parameter menu + Control/gating unit + Speed control - Upread/free access
P231 n(act)_filter 231	This filter option is switched off for a parameter value of 0. A second-order Bessel low-pass filter is switched into the actual speed value channel for values greater than 0. The parameter value is the base frequency of the low-pass. (Frequency in Hz).	index1: 0 Min: 0 Max: 500 Unit: - Indices: 2 Type: O2	Menus: - Parameter menu - Upread/free access Changeable in: - Drive setting - Ready
P232* Src n-Reg Adapt 232	BICO parameter for selecting the connector from which the input signal for gain adaptation of the speed controller is to be read in.	index1: 0 Unit: - Indices: 2 ,BDS Type: L2 ,K	Menus: - Parameter menu + Control/gating unit + Speed control - Upread/free access Changeable in: - Drive setting
P233* n-Reg Adapt 1 233	Function parameter for entering the 1st characteristic-curve point for gain adaptation of the speed controller.	index1: 0,0 Min: 0,0 Max: 200,0 Unit: % Indices: 4 ,FDS Type: O2	Menus: - Parameter menu + Control/gating unit + Speed control - Upread/free access Changeable in: - Drive setting - Ready
P234* n-Reg Adapt 2 234	Function parameter for entering the 2nd characteristic-curve point for GAIN adaptation of the speed controller.	index1: 100,0 Min: 0,0 Max: 200,0 Unit: % Indices: 4 ,FDS Type: O2	Menus: - Parameter menu + Control/gating unit + Speed control - Upread/free access Changeable in: - Drive setting - Ready

Parameter	Description	Data	Read/write
P235* n-Reg Gain1 235	Function parameter for entering the 1st gain value for gain adaptation of the speed controller. Starting from the factory setting, this value can be used to reset the gain of the speed controller.	index1: 10,0 Min: 0,0 Max: 1000,0 Unit: - Indices: 4 ,FDS Type: O2	Menus: - Parameter menu + Control/gating unit + Speed control - Upread/free access Changeable in: - Drive setting - Ready
P236* n-RegGain2 236	Function parameter for entering the 2nd gain value for gain adaptation of the speed controller.	index1: 10,0 Min: 0,0 Max: 1000,0 Unit: - Indices: 4 ,FDS Type: O2	Menus: - Parameter menu + Control/gating unit + Speed control - Upread/free access Changeable in: - Drive setting - Ready
r237 n-Reg Gain(act) 237	Visualization parameter for displaying the current proportional gain in the speed controller.	Dec.Plc.: 1 Unit: - Indices: - Type: I2	Menus: - Parameter menu + Control/gating unit + Speed control - Upread/free access
P238* n-Reg Character 238	Selection of characteristic for the speed controller. See also Compendium Chapter 7.3.7. P238 = 0: PI controller (standard) The speed controller is optimized according to the familiar rules, e.g. symmetrical optimum. During optimization, e.g. after symmetrical optimum for a good response to disturbances, there is an overshoot in the control performance. This overshoot in control performance should be reduced by a corresponding setpoint smoothing (e.g. P221) or with the aid of the reference model (P238 = 1). P238 = 1: PIR controller (reference model for the I component) With the aid of the PIR controller characteristic (reference model) the control performance of the speed controller can be improved (reduction of overshoot). Precondition is the setting according to PI controller conditions (see above P238 = 0). In addition, for the PIR controller (P238=1), the time constant of the reference model (P239) shall be adjusted to such an extent that, for example, in the case of a setpoint jump only the slightest overshoot performance will occur.	Init: 0 Min: 0 Max: 7 Unit: - Indices: - Type: O2	Menus: - Parameter menu + Control/gating unit + Speed control - Upread/free access Changeable in: - Drive setting
P239* Smoothing I Comp 239	Smoothing for the I component at the PIR speed controller characteristic. See also P238 or the Compendium Chapter 7.3.7. If the equipment conditions permit, proceed in the following manner: Set TN (P240) to value 0 (make a note of the original value!) and trace K0155 at a setpoint jump; the time constant (P239) has to be adjusted in such a manner that the area above and below the zero line of K0155 is approximately equal; TN (P240) then has to be reset to the original value.	index1: 2,0 Min: 0,5 Max: 20,0 Unit: ms Indices: 4 ,FDS Type: O2	Menus: - Parameter menu + Control/gating unit + Speed control - Upread/free access Changeable in: - Drive setting - Ready
P240* n-Reg Time 240	Function parameter for entering the reset time of the speed controller.	index1: 50 Min: 0 Max: 1000 Unit: ms Indices: 4 ,FDS Type: O2	Menus: - Parameter menu + Control/gating unit + Speed control - Upread/free access Changeable in: - Drive setting - Ready

Parameter	Description	Data	Read/write
P241* Src SetV n-Reg1 241	BICO parameter for selecting the connector from which the set value for the I component of the speed controller is to be read in.	index1: 0 Unit: - Indices: 2 ,BDS Type: L2 ,K	Menus: - Parameter menu + Control/gating unit + Speed control - Upread/free access Changeable in: - Drive setting
P242* Src Set n-Reg1 242	BICO parameter for selecting the binector from which the command for setting the I component of the speed controller is to be read in. The set value is adopted when the edge of the signal rises.	index1: 0 Unit: - Indices: 2 ,BDS Type: L2 ,B	Menus: - Parameter menu + Control/gating unit + Speed control - Upread/free access Changeable in: - Drive setting
P243* Src n-Reg1 STOP 243	BICO parameter for selecting the binector from which the command for halting the I component of the speed controller is to be read in. When the value of the signal connected to the binector is a logical "1", the I component of the speed controller is halted. From then onwards, the speed controller only works as a P controller.	index1: 0 Unit: - Indices: 2 ,BDS Type: L2 ,B	Menus: - Parameter menu + Control/gating unit + Speed control - Upread/free access Changeable in: - Drive setting
P244* Q.Speed ext. 244	Souce for speed measurement of the external encoder. Connector KK90 or KK104 can be used here.	Init: 0 Unit: - Indices: - Type: L2 ,K ,K	Menus: - Parameter menu - Upread/free access Changeable in: - Drive setting
P245* Src Droop 245	BICO parameter for selecting the connector from which the input signal for the droop is to be read in. Preferably, the I component of the speed controller (K0155) is connected here.	index1: 0 Unit: - Indices: 2 ,BDS Type: L2 ,K	Menus: - Parameter menu + Control/gating unit + Speed control - Upread/free access Changeable in: - Drive setting
P246* Scale Droop 246	Function parameter for scaling the droop. Parameter values greater than 0 lead to lowering of the speed setpoint when load is applied to the drive and thus to a deviation of the speed from the main setpoint.	index1: 0,0 Min: 0,0 Max: 100,0 Unit: % Indices: 4 ,FDS Type: O2	Menus: - Parameter menu + Control/gating unit + Speed control - Upread/free access Changeable in: - Drive setting - Ready
P248* Src DT1 Function 248	BICO parameter for selecting the connector from which the input signal of the DT1 function is to be read in.	index1: 0 Unit: - Indices: 2 ,BDS Type: L2 ,K ,K	Menus: - Parameter menu + Control/gating unit + Speed control - Upread/free access Changeable in: - Drive setting
P249* DT1 Function T1 249	Function parameter for entering the smoothing time T1 of the DT1 function.	index1: 0,0 Min: 0,0 Max: 10,0 Unit: ms Indices: 4 ,FDS Type: O2	Menus: - Parameter menu + Control/gating unit + Speed control - Upread/free access Changeable in: - Drive setting - Ready
P250* DT1 Function Td 250	Function parameter for entering the differential time Td of the DT1 function.	index1: 0,0 Min: 0,0 Max: 1000,0 Unit: ms Indices: 4 ,FDS Type: O2	Menus: - Parameter menu - Upread/free access Changeable in: - Drive setting - Ready

Parameter	Description	Data	Read/write
P251* Band-Stop Gain 251	Function parameter for entering the gain of the band-stop filter.	Init: 100,0 Min: 0,0 Max: 150,0 Unit: % Indices: - Type: O2	Menus: - Parameter menu + Control/gating unit + Speed control - Upread/free access Changeable in: - Drive setting
P252* Src Band-Stop 252	BICO parameter for selecting the connector from which the input signal for the band-stop filter is to be read in. A band-stop filter can be used specifically to prevent excitation of mechanical or electrical resonances.	Init: 0 Unit: - Indices: - Type: L2 ,K ,K	Menus: - Parameter menu + Control/gating unit + Speed control - Upread/free access Changeable in: - Drive setting
P253* Qty Band-Stop 253	Quality of the band-stop filter Function parameter for entering the quality of the band-stop filter. The quality of the band-stop filter indicates how well those parts of the signal which are within the range of the resonant frequency are filtered out. P254/P253 yields the width of the frequency range at -3dB weakening, where: Lower limit frequency = P254 * [Root (1+ 1/(2*P253)^2) - 1/(2*P253)] Upper limit frequency = P254 * [Root (1+ 1/(2*P253)^2) + 1/(2*P253)] If a quality of 0.0 is input, the pertinent band-stop filter is switched off, i.e. it lets all frequencies through.	index1: 0,0 Min: 0,0 Max: 3,0 Unit: - Indices: 3 Type: O2	Menus: - Parameter menu + Control/gating unit + Speed control - Upread/free access Changeable in: - Drive setting - Ready
P254* Filter Frequency 254	At filter characteristic 1 (P256=1): Resonant frequency of the band-stop filter. Harmonics of exactly this frequency are completely eliminated by the band-stop filter. The extent to which neighbouring frequencies are weakened depends on the quality/selectivity of band-stop filter P253. At filter characteristic 2 (P256=2): Key frequency (-3dB) of the low-pass filter. At this frequency the amplitude is weakened to 70% (=3dB).	index1: 50,0 Min: 1,0 Max: 500,0 Unit: Hz Indices: 3 Type: O2	Menus: - Parameter menu + Control/gating unit + Speed control - Upread/free access Changeable in: - Drive setting - Ready
r255 Torq(set,n-Reg) 255	Visualization parameter for displaying the torque setpoint at the output of the speed controller.	Dec.Plc.: 1 Unit: Nm Indices: - Type: I2	Menus: - Parameter menu + Control/gating unit + Speed control - Upread/free access
P256* Filter Character 256	The parameter defines the filter characteristic. Value = 0: Enabled Value = 1: Band-stop Value = 2: Low pass Further values for future use !	index1: 1 Min: 0 Max: 7 Unit: - Indices: 3 Type: O2	Menus: - Parameter menu + Control/gating unit + Speed control - Upread/free access Changeable in: - Drive setting - Ready
P257* Filter Adjust1 257	Further essential quantities of the filter can be preset via this parameter depending on the filter characteristic. Filter characteristic 1 (band-stop): The remaining amplitude at filter frequency can be preset via this parameter. In view of the phase response, it can be worthwhile not to suppress this amplitude completely. Filter characteristic 2 (low-pass): Without function	index1: 0,000 Min: 0,000 Max: 200,000 Unit: % Indices: 3 Type: I4	Menus: - Parameter menu + Control/gating unit + Speed control - Upread/free access Changeable in: - Drive setting - Ready

Parameter	Description	Data	Read/write
P258* Filter Adjust2 258	Further essential quantities of the filter can be preset via this parameter depending on the filter characteristic. For future use !	index1: 100,000 Min: 0,000 Max: 200,000 Unit: % Indices: 3 Type: I4	Menus: - Parameter menu + Control/gating unit + Speed control - Upread/free access Changeable in: - Drive setting - Ready
P260* Src Torq (set) 260	BICO parameter for selecting the connector from which the torque setpoint is to be read in during "Master drive" operating mode.	index1: 153 Unit: - Indices: 2 ,BDS Type: L2 ,K	Menus: - Parameter menu + Control/gating unit + Speed control - Upread/free access Changeable in: - Drive setting
P261* Src Torq(conseq) 261	BICO parameter for selecting the connector from which the torque setpoint is to be read in during "Slave drive" operating mode.	index1: 0 Unit: - Indices: 2 ,BDS Type: L2 ,K	Menus: - Parameter menu + Control/gating unit + Speed control - Upread/free access Changeable in: - Drive setting
P262* Src Torque(add) 262	BICO parameter for selecting the connector from which the additional setpoint for the torque is to be read in. The additional setpoint is added to the setpoint of the torque both in "Master drive" and "Slave drive" operating mode.	index1: 0 Unit: - Indices: 2 ,BDS Type: L2 ,K	Menus: - Parameter menu + Control/gating unit + Speed control - Upread/free access Changeable in: - Drive setting
P263* FSetpTorq(Lim1) 263	Function parameters for entering the fixed setpoint for the upper torque limit. The parameter value entered relates to the reference torque entered in P354.	index1: 100,0 Min: -200,0 Max: 200,0 Unit: % Indices: 4 ,FDS Type: I2	Menus: - Parameter menu + Control/gating unit + Speed control - Upread/free access Changeable in: - Drive setting - Ready
P264* FSetpTorq(Lim2) 264	Function parameter for entering the fixed setpoint for the lower torque limit. The parameter value entered relates to the reference torque entered in P354.	index1: - 100,0 Min: -200,0 Max: 200,0 Unit: % Indices: 4 ,FDS Type: I2	Menus: - Parameter menu + Control/gating unit + Speed control - Upread/free access Changeable in: - Drive setting - Ready
P265* Src Torq(Limit1) 265	BICO parameter for selecting the connector from which the upper limit for the torque is to be read in.	index1: 170 Unit: - Indices: 2 ,BDS Type: L2 ,K	Menus: - Parameter menu + Control/gating unit + Speed control - Upread/free access Changeable in: - Drive setting
P266* Src Torq(Limit2) 266	BICO parameter for selecting the connector from which the lower limit for the torque is to be read in.	index1: 171 Unit: - Indices: 2 ,BDS Type: L2 ,K	Menus: - Parameter menu + Control/gating unit + Speed control - Upread/free access Changeable in: - Drive setting

Parameter	Description	Data	Read/write
P267* Src Torque(add3) 267	BICO parameter for selecting the connector from which the supplementary setpoint for the torque is to be read in. The supplementary setpoint is added to the limited setpoint of the torque, i.e the addition takes place behind the limitation of the torque.	index1: 0 Unit: - Indices: 2 ,BDS Type: L2 ,K	Menus: - Parameter menu - Upread/free access Changeable in: - Drive setting
r269 Torq (set, Lim) 269	Visualization parameter for displaying the torque setpoint after limitation.	Dec.Plc.: 1 Unit: Nm Indices: - Type: I2	Menus: - Parameter menu + Control/gating unit + Speed control - Upread/free access
P270* Src I(sq,set) 270	BICO parameter for selecting the connector from which the setpoint of the torque-forming current component is to be read in.	index1: 166 Unit: - Indices: 2 ,BDS Type: L2 ,K	Menus: - Parameter menu + Control/gating unit + Speed control - Upread/free access Changeable in: - Drive setting
P271* Src I(sq,add) 271	BICO parameter for selecting the connector from which the additional setpoint for the torque-forming current component is to be read in.The additional setpoint is added to the setpoint.	index1: 0 Unit: - Indices: 2 ,BDS Type: L2 ,K	Menus: - Parameter menu + Control/gating unit + Speed control - Upread/free access Changeable in: - Drive setting
r272 Isq (set,active) 272	Visualization parameter for displaying the setpoint of the torque-forming current component Isq.	Dec.Plc.: 1 Unit: A Indices: - Type: I2	Menus: - Parameter menu + Control/gating unit + Current control - Upread/free access
P275* Src I(max) 275	BICO parameter for selecting the connector from which an external setpoint for the maximum current is to be read in.	index1: 2 Unit: - Indices: 2 ,BDS Type: L2 ,K	Menus: - Parameter menu + Control/gating unit + Speed control - Upread/free access Changeable in: - Drive setting
P282 Amps Reg Gain 282	Gain of the current controller.	Init: 80,0 Min: 0,0 Max: 200,0 Unit: % Indices: - Type: O2	Menus: - Parameter menu + Control/gating unit + Current control - Upread/free access Changeable in: - Drive setting
P285 Ki CurrReg 285	Integral component of the current controller. Only for special cases.	Init: 0,0 Min: 0,0 Max: 100,0 Unit: % Indices: - Type: O2	Menus: - Parameter menu + Control/gating unit + Current control - Upread/free access Changeable in: - Drive setting
r286 PosTestAngle 286	Monitoring parameter for the position test. The angle is represented in angular degrees to two decimal places. Wrong orientation of the motor encoder can be detected when the rotor is aligned with impressed current in position test mode. Correction is made by roating the encoder or by a suitable entry in P132.	Dec.Plc.: 2 Unit: - Indices: - Type: I4	Menus: - Parameter menu - Upread/free access

Parameter	Description	Data	Read/write
P290* Sel V/f, I-Reg 290	Function parameter for selecting the active type of current control. 0 = Vectorial current control 1 = V/f characteristic The respective non-activated control mode is not calculated by the firmware. The control mode "V/f characteristic" is NOT designed to be used with brushless DC motors (1FT6 / 1FK6)! In the case of current-controlled operation (P290=0) automatic motor identification should always be carrried out upon start-up. Please keep in mind that in the case of operation with v/f characteristic (P290=1) without an encoder, P799 (Source OFF actual value) must be set to 200 for the correct function of the OFF1 command. In order to avoid the alarm "Target - Actual Deviation", P791 (Source actual value) should also be set to 200. If further signals the signals given in function diagram 480 are used, the actual value source must be adjusted.	Init: 0 Min: 0 Max: 1 Unit: - Indices: - Type: O2	Menus: - Parameter menu + Control/gating unit + Current control + V/f open-loop control - Drive setting - Upread/free access Changeable in: - Drive setting
P291* FSetp Flux (set) 291	Function parameter for entering the fixed setpoint for the flux of the connected induction motor. The parameter value entered relates to the rated flux of the parameterized motor.	Init: 100,0 Min: 20,0 Max: 200,0 Unit: % Indices: - Type: O2	Menus: - Parameter menu + Control/gating unit + Current control - Upread/free access Changeable in: - Drive setting - Ready
P292* Src Flux (set) 292	BICO parameter for selecting the connector from which the flux setpoint for the connected induction motor is to read in.	Init: 180 Unit: - Indices: - Type: L2 ,K	Menus: - Parameter menu + Control/gating unit + Current control - Upread/free access Changeable in: - Drive setting
P293* FieldWKFreq 293	Function parameter for entering the field weakening frequency. From the set parameter value upwards, a connected induction motor with a weakened field is to be operated. Depending on the actual voltage conditions, the field weakening frequency actually produced can be lower. The parameter value is calculated during automatic calculation of the derived motor data (P115).	Init: 0,0 Min: 0,0 Max: 400,0 Unit: Hz Indices: - Type: O2	Menus: - Parameter menu + Control/gating unit + Current control - Drive setting - Upread/free access Changeable in: - Drive setting
P294* Select Flux Reg 294	Function parameter for selecting the flux specification when an induction motor is used. 0 = Controlled (closed-loop), flux controller active 1 = Controlled (open-loop), flux controller not active	Init: 0 Min: 0 Max: 1 Unit: - Indices: - Type: O2	Menus: - Parameter menu + Control/gating unit + Current control - Drive setting - Upread/free access Changeable in: - Drive setting
P296* Dynamic I-Reg 296	Function parameter for selecting the dynamics of the current controller. The number of sampling steps is prescribed after which a setpoint step-change is to be fully corrected. 0 = 2 sampling steps, highest dynamic response 1 = 3 sampling steps, medium dynamic response 2 = 4 sampling steps, lowest dynamic response	Init: 1 Min: 0 Max: 2 Unit: - Indices: - Type: O2	Menus: - Parameter menu + Control/gating unit + Current control - Drive setting - Upread/free access Changeable in: - Drive setting

Parameter	Description	Data	Read/write
P297 Flux Reg. Gain 297	Function parameter for setting the flux controller gain. Only effective for induction motors. For future use. Not currently implemented!	Init: 0,00 Min: 0,00 Max: 16,00 Unit: - Indices: - Type: O2	Menus: - Parameter menu + Control/gating unit + Speed control - Upread/free access Changeable in: - Drive setting - Ready
P320* Src n(set,V/f) 320	BICO parameter for selecting the connector from which the torque setpoint during operation with v/f control is to be read in.	index1: 0 Unit: - Indices: 2 ,BDS Type: L2 ,K ,K	Menus: - Parameter menu + Control/gating unit + V/f open-loop control - Upread/free access Changeable in: - Drive setting
P321* Src n(add,V(f) 321	BICO parameter for selecting the connector from which the additional setpoint for the speed during operation with v/f control is to be read in. The additional setpoint is added to the speed setpoint. By means of the additional setpoint, a speed control can be superimposed on the V/f control and the load-dependent slip of a connected induction motor can be compensated.	index1: 0 Unit: - Indices: 2 ,BDS Type: L2 ,K ,K	Menus: - Parameter menu + Control/gating unit + V/f open-loop control - Upread/free access Changeable in: - Drive setting
P322 FSetp AddBoost 322	Function parameter for entering the additional boost for the V/f characteristic curve at 0 Hz. The parameter value entered relates to the reference voltage entered in P351.	Init: 2,0 Min: 0,0 Max: 100,0 Unit: % Indices: - Type: O2	Menus: - Parameter menu + Control/gating unit + V/f open-loop control - Upread/free access Changeable in: - Drive setting - Ready
P323* Src Add Boost 323	BICO parameter for selecting the connector from which the setpoint for the additional boost during operation with the V/f characteristic curve is to be entered. The setpoint read in is added to the voltage boost entered in P325 if the additional boost is released.	Init: 202 Unit: - Indices: - Type: L2 ,K	Menus: - Parameter menu + Control/gating unit + V/f open-loop control - Upread/free access Changeable in: - Drive setting
P324* Src Rel AddBoost 324	BICO parameter for selecting the binector from which the command for applying the additional boost during operation with V/f control is to be read in. The additional boost can, e.g., be applied during heavy starting.	Init: 0 Unit: - Indices: - Type: L2 ,B	Menus: - Parameter menu + Control/gating unit + V/f open-loop control - Upread/free access Changeable in: - Drive setting
P325* FSetp Boost 325	Function parameter for entering the voltage by which the V/f characteristic curve is to be boosted at 0 Hz. When the additional boost is applied, the value of the additional boost is added to the set value.	Init: 2,00 Min: 0,00 Max: 100,00 Unit: V Indices: - Type: O2	Menus: - Parameter menu + Control/gating unit + V/f open-loop control - Drive setting - Upread/free access Changeable in: - Drive setting - Drive setting - Ready

Parameter	Description	Data	Read/write
P326* Freq Curve 1 326	Function parameter for entering the frequency back-up points for V/f characteristic curve 1. The values must be arranged in ascending order. Two successive values must differ by at least 1 Hz. Example: Index 1: 5 Hz Index 2: 10 Hz Index 3: 50 Hz Index 4: 70 Hz The values must correspond to the assigned voltage values in the same index of parameter P327.	index1: 1,0 Min: 1,0 Max: 400,0 Unit: Hz Indices: 4 Type: O2	Menus: - Parameter menu + Control/gating unit + V/f open-loop control - Drive setting - Upread/free access Changeable in: - Drive setting - Drive setting
P327 Volts Curve 1 327	Function parameter for entering the voltage back-up points for V/f characteristic curve 1. The values must correspond to the assigned frequency values in the same index of parameter P326.	index1: 2,0 Min: 0,0 Max: 1000,0 Unit: V Indices: 4 Type: O2	Menus: - Parameter menu + Control/gating unit + V/f open-loop control - Drive setting - Upread/free access Changeable in: - Drive setting - Drive setting - Ready
P328* Freq Curve 2 328	Function parameter for entering the frequency back-up points for V/f characteristic curve 2. The values must be arranged in ascending order. Two successive values must differ by at least 1 Hz. Example: Index 1: 5 Hz Index 2: 10 Hz Index 3: 50 Hz Index 4: 70 Hz The values must correspond to the assigned voltage values in the same index of parameter P329.	index1: 1,0 Min: 1,0 Max: 400,0 Unit: Hz Indices: 4 Type: O2	Menus: - Parameter menu + Control/gating unit + V/f open-loop control - Drive setting - Upread/free access Changeable in: - Drive setting - Drive setting
P329 Volts Curve 2 329	Function parameter for entering the voltage back-up points for V/f characteristic curve 2. The values must correspond to the assigned frequency values in parameter P328.	index1: 2,0 Min: 0,0 Max: 1000,0 Unit: V Indices: 4 Type: O2	Menus: - Parameter menu + Control/gating unit + V/f open-loop control - Drive setting - Upread/free access Changeable in: - Drive setting - Drive setting - Ready
P330* Src Select Curve 330	BICO parameter for selecting the binector from which the command for changing between V/f characteristic curves 1 and 2 is to be read in. The signals are assigned as follows: Signal logical 0: V/f characteristic curve 1 active Signal logical 1: V/f characteristic curve 2 active	Init: 0 Unit: - Indices: - Type: L2 ,B	Menus: - Parameter menu + Control/gating unit + V/f open-loop control - Upread/free access Changeable in: - Drive setting
P331* Imax Reg Gain 331	Function parameter for entering the gain factor for the current-limitation controller. The current-limitation controller prevents a connected motor from being continually operated with overcurrent during V/f control.	Init: 0,005 Min: 0,001 Max: 0,500 Unit: - Indices: - Type: O2	Menus: - Parameter menu + Control/gating unit + V/f open-loop control - Upread/free access Changeable in: - Drive setting - Ready

Parameter	Description	Data	Read/write
P332* Imax Reg Time 332	Function parameter for entering the reset time für the current-limitation controller. The current-limitation controller prevents a connected motor from being continually operated with overcurrent during V/f control.	Init: 1000 Min: 0 Max: 32000 Unit: ms Indices: - Type: O2	Menus: - Parameter menu + Control/gating unit + V/f open-loop control - Upread/free access Changeable in: - Drive setting - Ready
P333* Imax Reg Mode 333	Function parameter for selecting the type of intervention for the current-limitation controller. 0 = Reduction of voltage 1 = Reduction of frequency and voltage	Init: 1 Min: 0 Max: 1 Unit: - Indices: - Type: O2	Menus: - Parameter menu - Upread/free access Changeable in: - Drive setting
P340* Pulse Frequency 340	Function parameter for entering the pulse frequency. The pulse frequency indicates how often the valves in the power section operate.In addition, the smallest possible sampling time (time slot) T0 is defined by the pulse frequency. The length of time slot T0 is given by the reciprocal of the set pulse frequency (T0 = 1/P340). A high pulse frequency therefore means a short sampling time and thus a high dynamic response but, at the same time, high utilization of calculating time and greater heat losses in the converter (switching losses). A low pulse frequency means a lower dynamic response but more free calculating time and smaller heat losses. If the performance of the basic unit is fully utilized (pulse frequency P340 = 7.5 kHz), the onboard-technology (F01) cannot be used. If a SIMOLINK board (SLB) is connected, the pulse frequency is automatically set to low. In order to ensure that synchronization to the SIMOLINK cycle-time determined by the dispatcher or automation master can take place, the pulse frequency must be set according to the following rule: P340 = k x 4/cycle time where k = 1, 2, 3, ... In some cases (compact and chassis units), a pulse frequency of 5kHz can lead to derating of the converter rated current as compared with the value entered in P072. The maximum pulse frequency that can be set for standard applications is 7.5 kHz. The valid maximum current with due account taken of the pulse frequency can be read in r129. The pulse frequency should not be set to values larger than 7.5 kHz (for 60MHz - DSP) or 6 kHz (for 40MHz - DSP). If higher values are set, indices 12 to 19 have to be checked on visualization parameter r829. The indicated free calculating time of the DSP time slots always has to be greater than zero. If the calculating time is exceeded, this is also displayed by fault F043 (DSP coupling). Remedy: Reduce the pulse frequency.	Init: 5,0 Min: 5,0 Max: 10,0 Unit: kHz Indices: - Type: O2	Menus: - Parameter menu + Gating unit - Drive setting - Upread/free access Changeable in: - Drive setting
P341 f-Changeover 341	The deadtime compensation can also be automatically activated or de-activated irrespective of the stator frequency. Index 1 determines the center frequency Index 2 determines the hysterisis Function is not implemented at present!	index1: 5,0 Min: 0,0 Max: 6553,5 Unit: Hz Indices: 2 Type: O2	Menus: - Parameter menu + Gating unit - Upread/free access Changeable in: - Drive setting

Parameter	Description	Data	Read/write
P347 ON VoltsCompens. 347	Function parameter for the correction of the symmetrical valve voltage drops of the inverter IGBTs. The parameter value is pre-set during automatic parameterization (P115 = 1) or measured during motor data identification (P115 = 2, 3).	Init: 7,0 Min: 0,0 Max: 25,0 Unit: V Indices: - Type: O2	Menus: - Parameter menu + Gating unit - Drive setting - Upread/free access Changeable in: - Drive setting - Drive setting - Ready
P348 Dead Time Comp. 348	Function parameter for selection of the deadtime compensation in the gating unit The deadtime compensation eliminates the voltage error which is obtained as a result of the interlock times in the gating unit. Compensation is enabled/disabled during automatic parameterization (P115 = 1). Parameter values: 0: no deadtime compensation in the gating unit 1: deadtime compensation in the gating unit enabled Setting instructinos: For high pulse frequencies, for motors with low stator time constant (r125) (positioning drives) and for long cables, it may be practical to disable the compensation in order to improve the smooth running characteristics at low speeds. 2. For future use.	Init: 1 Min: 0 Max: 2 Unit: - Indices: - Type: O2	Menus: - Parameter menu + Gating unit - Upread/free access Changeable in: - Drive setting - Drive setting - Ready
P349 T(DeadTimeComp.) 349	Function parameter for the compensation time of the gating unit interlock. In the case of induction motors, the value is pre-set during motor data indentification (P115 = 2, 3). Setting instructions: - For positioning drives or for the improvement of the smooth running characteristics at low frequencies, it may be practical to disable the compensation (P348 = 0). In this case, it is not permissible to reset P349, in order that the missing compensation voltage can be calculated.internally from it. (Only for P100=3,4,5) - To improve the smooth running characteristics for the v/f control (P100=0,1,2) the compensation of the interlock time can be changed. - At high pulse frequencies (abov approx. 6 kHz), it is not recommended to disable the compensation as the torque ripple would then increase again due to voltage areas in the range of the zero passages of the phase currents.	Init: 0,00 Min: 0,00 Max: 25,55 Unit: µs Indices: - Type: O2	Menus: - Parameter menu + Gating unit - Upread/free access Changeable in: - Drive setting - Drive setting - Ready
P350* Ref Amps 350	Function parameter for entering the reference current. The value entered is for normalizing all current variables and corresponds to a connector value of 4000 H (100 %). The closed-loop control system can process up to twice the value entered. The set value 0 A is not allowed. The reference quantity for current (P350) or torque (P354) should just be changed with the same integer multiple number. The effective n-regulation will be changed by the same factor. Caution: By changing the set value, the current limitations are changed as well.	Init: 0,0 Min: 0,0 Max: 6553,5 Unit: A Indices: - Type: O2	Menus: - Parameter menu + Motor/encoder + Motor data - Drive setting - Upread/free access Changeable in: - Drive setting

Parameter	Description	Data	Read/write
P351* Ref Volts 351	Function parameter for entering the reference voltage. The value entered is for normalizing all the voltage variables and corresponds to a connector value of 4000 H (100 %). The closed-loop control system can process up to twice the value entered.	Init: 500 Min: 100 Max: 1000 Unit: V Indices: - Type: O2	Menus: - Parameter menu + Functions - Drive setting - Upread/free access Changeable in: - Drive setting
P352* Ref Frequency 352	Function parameter for entering the reference frequency. The value entered is for normalizing all the frequency variables and corresponds to a connector value of 4000 H (100 %). The closed-loop control system can process up to twice the value entered. A value 0 Hz is not allowed. The reference quantity for frequency (P352) or speed (P354) should just be changed with the same integer multiple number. The effective n-regulation will be changed by the same factor. The position control amplifier will be increased by the reverse of this factor. The rated speed for position control P205 has to be changed by this factor to enable the effective position control gain to remain.	Init: 50 Min: 0 Max: 500 Unit: Hz Indices: - Type: O2	Menus: - Parameter menu + Functions - Drive setting - Upread/free access Changeable in: - Drive setting
P353* Ref Speed 353	Parameter for entering the reference speed. The value entered is for normalizing all the speed variables and corresponds to a connector value of 4000 H (100 %). The closed-loop control system can process up to twice the value entered. That part of the reference speed value before the decimal point is entered in Index 1. If the reference speed value is required in higher resolution, the digits after the decimal point can be entered in Index 2. There are four decimal places. Zeroes must always be added if applicable. A value of 0 rpm is not allowed. Examples: Reference Speed P353.01 P353.02 1234 1234 0 1234.5 1234 5000 1234.123 1234 1230 1234.0120 1234 120 The reference variable for frequency (P352) or speed (P353) should just be changed with the same integer multiple number. The effective n-regulation will be changed by the same factor. The position control amplifier will be increased by the reverse of this factor. The rated speed for position control P205 has to be changed by this factor to enable the effective position control gain to remain Caution: By changing the set value, the speed limits are changed as well.	index1: 3000 Min: 0 Max: 10000 Unit: 1/min Indices: 2 Type: O2	Menus: - Parameter menu + Functions - Drive setting - Upread/free access Changeable in: - Drive setting

Parameter	Description	Data	Read/write
P354* Ref Torque 354	Function parameter for entering the reference torque. The value entered is for normalizing all the torque variables and corresponds to a connector value of 4000 H (100 %). The closed-loop control system can process up to twice the value entered. A value 0 Nm is not allowed. The reference variable for current (P350) or torque (P354) should just be changed with the same integer multiple number. The effective n-regulation will be changed by the same factor. Caution: By changing the set value, the torque limits are changed as well.	Init: 10,0 Min: 0,0 Max: 6535,0 Unit: Nm Indices: - Type: O2	Menus: - Parameter menu + Functions - Drive setting - Upread/free access Changeable in: - Drive setting
P355* MachRefSpeed 355	Function parameter for entering the reference speed for the machine encoder. The entered value is for normalization of all speed variables of the machine encoder and corresponds to a connector value of 4000 H (100%). Values up to twice the input value can be processed by the control system. In Index 1 the decimal places of the reference speed before the comma is entered. If a higher resolution of the reference speed is required, decimal place after the comma can be entered in Index 2. Index 2 is only effective for speed mixing (function diagram 500a). Compare parameter P353.	index1: 3000 Min: 0 Max: 10000 Unit: 1/min Indices: 2 Type: O2	Menus: - Parameter menu + Functions - Drive setting - Upread/free access Changeable in: - Drive setting
P356* n(act) Filtercha 356	The parameter defines the filter characteristic for the speed actual value filter. For future use !	index1: 0 Min: 0 Max: 7 Unit: - Indices: 2 Type: O2	Menus: - Parameter menu + Control/gating unit + Speed control - Upread/free access Changeable in: - Drive setting - Drive setting
P358* Key 358	Function parameter for entering the key. If the values in both indices tally with the values entered in Lock parameter P359, other menus can also be selected in P060 as well as the menu "User Parameters" and the menu "Fixed settings".	index1: 0 Unit: - Indices: 2 Type: L2	Menus: - User parameters- Parameter menu + Functions - Upread/free access Changeable in: - Drive setting
P359* Lock 359	Function parameter for entering the password. If the same value is entered in both indices in the Key parameter, other menus can also be selected in P060 as well as the menu "User Parameters" and the menu "Fixed settings".	index1: 0 Unit: - Indices: 2 Type: L2	Menus: - Parameter menu + Functions - Upread/free access Changeable in: - Drive setting
P360* Select UserParam 360	Function parameter for selecting the parameters which are to be visible in the "User Parameters" menu. After selection of the "User Parameters" menu (P60 = 0), apart from parameters P53 and P60, only those parameters are visible whose numbers have been entered in indices 3 to 100.	index1: 60 Min: 0 Max: 2999 Unit: - Indices: 100 Type: O2	Menus: - Parameter menu + Functions - Upread/free access Changeable in: - Drive setting - Ready
P361* OP Backlight 361	Backlight for the optional operation panel OP Parameter values: 0 = Backlight alwasy ON 1 = Backlight only ON during operation	Init: 1 Min: 0 Max: 1 Unit: - Indices: - Type: O2	Menus: - Parameter menu + Functions - Upread/free access Changeable in: - Drive setting - Ready

Parameter	Description	Data	Read/write
P363* Copy BICO DSet 363	Function parameter for starting the "Copy BICO Data Set" function. With this function, the settings of one BICO data set (Index 1 or 2) are transferred to the other data set. Starting takes place with a parameter setting not equal to 0. The last two digits of the parameter value indicate which source data set (penultimate digit) is to be copied to which target data set (last digit). After the function has been performed, the parameter is automatically reset to 0. 0 = No activity 12 = Copies Index 1 of the BDS parameters to Index 2 21 = Copies Index 2 of the BDS parameters to Index 1	Init: 0 Unit: - Indices: - Type: L2	Menus: - Parameter menu + Functions - Upread/free access Changeable in: - Drive setting
P364* Copy FuncDSet 364	Function call for "Copy Function Data Set". The last two digits of the parameter value indicate which source data set (penultimate digit, value range 1 to 4) is to be copied to which target data set (last digit, value range 1 to 4). After the function has been performed, the parameter is automatically reset to "0". Function parameter for starting the "Copy Function Data Set" function. With this function, the settings of a function data set (Index 1, 2, 3 or 4) are transferred to another data set. Starting takes places with a parameter setting not equal to 0. The last two digits of the parameter value indicate which source data set (penultimate digit) is to be copied to which target data set (last digit). After the function has been performed, the parameter is automatically reset to 0. Examples 0 = No activity 12 = Copies Index 1 of the FDS parameters to Index 2 31 = Copies Index 3 of the FDS parameters to Index 1 24 = Copies Index 2 of the FDS parameters to Index 4	Init: 0 Unit: - Indices: - Type: L2	Menus: - Parameter menu + Functions - Upread/free access Changeable in: - Drive setting
P366* Select FactSet 366	Reserved for future use	Init: 0 Min: 0 Max: 10 Unit: - Indices: - Type: O2	Menus: - Parameter menu - Upread/free access Changeable in: - Drive setting
P367* Select Reg Type 367	Function parameter for selecting a control configuration which is to be parameterized when a quick parameterization (P370) is carried out. 0 = V/f control 1 = - not used - 2 = Torque control 3 = Speed control	Init: 0 Min: 0 Max: 3 Unit: - Indices: - Type: O2	Menus: - Parameter menu - Quick parameterization - Upread/free access Changeable in: - Drive setting
P368* Select Setp Src 368 Compact PLUS only	Function parameter for selecting a setpoint/command source which is to be parameterized when a quick parameterization (P370) is carried out. 0 = - not used - 1 = Analog input and terminal strip 2 = Fixed setpoints and terminal strip 3 = Motor operated potentiometer and terminal strip 4 = USS 5 = not used 6 = PROFIBUS (CBP required) 7 = OP1S and fixed setpoints 8 = OP1S and motor operated potentiometer	Init: 1 Min: 0 Max: 8 Unit: - Indices: - Type: O2	Menus: - Parameter menu - Quick parameterization - Upread/free access Changeable in: - Drive setting

Parameter	Description	Data	Read/write
P368* Select Setp Src 368 not Compact PLUS	Function parameter for selecting a setpoint/command source, which is to be parameterized when a quick parameterization (P370) is carried out. 0 = PMU 1 = Analogeingang und Klemmleiste 2 = Festsollwerte und Klemmleiste 3 = Motorpoti und Klemmleiste 4 = USS 5 = - not used - 6 = PROFIBUS (CBP necessary) 7 = OP1S and fixed setpoints 8 = OP1S and motor-operated potentiometer	Init: 1 Min: 0 Max: 8 Unit: - Indices: - Type: O2	Menus: - Parameter menu - Quick parameterization - Upread/free access Changeable in: - Drive setting
P370* Quick Param 370	Function parameter for starting quick parameterization. When quick parameterization is selected, the unit is parameterized according to the selected parameter modules. 0 = No quick parameterization 1 = Start quick parameterization After quick parameterization has been completed, the parameter is reset to 0.	Init: 0 Min: 0 Max: 1 Unit: - Indices: - Type: O2	Menus: - Parameter menu + Functions - Quick parameterization - Upread/free access Changeable in: - Drive setting
P372* Simulation Mode 372	Function parameter for selecting simulated operation. Simulated operation allows test operation of the drive without DC link voltage. The unit must, therefore, have an external 24 V supply. Simulated operation can not be selected if the DC link voltage is more than 5 % of the rated DC link voltage. 0 = Simulated operation not active 1 = Simulated operation active	Init: 0 Min: 0 Max: 1 Unit: - Indices: - Type: O2	Menus: - Parameter menu + Functions - Upread/free access Changeable in: - Drive setting
P379 MotID.Temp 379	Motor temperature at the time of motor identification. During motor identification, the temperature sensor in the motor is read out and stored in this parameter. A value of 210°C stands for an invalid temperature.	Init: 25,00 Min: -50,00 Max: 210,00 Unit: °C Indices: - Type: I2	Menus: - Parameter menu + Functions - Upread/free access Changeable in: - Drive setting - Ready
P380 Mot Tmp Warning 380	Function parameter for entering the temperature threshold at which the warning "Motor Overtemperature" (A023) is to be tripped. Example: for temperature class B: <= 110 °C (60 K value for 1FK6/1FT6) for temperature class F: <= 145 °C (100 K value for 1FK6/1FT6)	Init: 100 Min: 0 Max: 200 Unit: °C Indices: - Type: I2	Menus: - Parameter menu + Diagnostics + Faults/warnings - Upread/free access Changeable in: - Drive setting - Ready
P381 Mot Tmp Fault 381	Function parameter for entering the temperature threshold at which the alarm message "Motor Overtemperature" (F020) is to be tripped. Example: for temperature class B: <= 120 °C (60 K value for 1FK6/1FT6) for temperature class F: <= 155 °C (100 K value for 1FK6/1FT6) If a temperature > 220 °C is entered, the I2t monitoring is automatically activated for the motor. Precondition for this is that the thermal motor time constant P383 is >=100s (factory setting).	Init: 120 Min: 0 Max: 200 Unit: °C Indices: - Type: I2	Menus: - Parameter menu + Diagnostics + Faults/warnings - Upread/free access Changeable in: - Drive setting - Ready

Parameter	Description	Data	Read/write
P382* Motor Cooling 382	The type of motor cooling has an influence on the calculation of the permissible load cycle during the I2t monitoring for the motor. The parameter value 1 (= factory setting) has to be selected for all 1FT6 and 1FK6 motors. Parameter values: 0: self-cooled 1: force-cooled	Init: 1 Min: 0 Max: 1 Unit: - Indices: - Type: O2	Menus: - Parameter menu + Diagnostics + Faults/warnings + Functions - Quick parameterization - Drive setting - Upread/free access Changeable in: - Drive setting - Drive setting - Ready

Parameter	Description	Data	Read/write
P383 Mot ThermT-Const 383	Thermal time constant of motor Setting instructions: The i²t calculation is activated by a parameter value >= 100 seconds. Example: for a 2-pole 1LA5063 motor, the value should be set to 8 min (from the table) *60s/min = 480s .	Init: 100 Min: 0 Max: 16000 Unit: s Indices: - Type: O2	Menus: - Parameter menu + Diagnostics + Faults/warnings + Functions - Quick parameterization - Drive setting - Upread/free access Changeable in: - Drive setting - Drive setting - Ready

The thermal time constants for Siemens standard motors are indicated in the following table (in minutes)

Type	2-pole	4-pole	6-pole	8-pole	10-pole	12-pole
1LA5063	8	13	-	-	-	-
1LA5070	8	10	12	-	-	-
1LA5073	8	10	12	-	-	-
1LA5080	8	10	12	-	-	-
1LA5083	10	10	12	-	-	-
1LA5090	5	9	12	12	-	-
1LA5096	6	11	12	14	-	-
1LA5106	8	12	12	16	-	-
1LA5107	-	12	-	16	-	-
1LA5113	14	11	13	12	-	-
1LA5130	11	10	13	10	-	-
1LA5131	11	10	-	-	-	-
1LA5133	-	10	14	10	-	-
1LA5134	-	-	16	-	-	-
1LA5163	15	19	20	12	-	-
1LA5164	15	-	-	-	-	-
1LA5166	15	19	20	14	-	-
1LA5183	25	30	-	-	-	-
1LA5186	-	30	40	45	-	-
1LA5206	30	-	45	-	-	-
1LA5207	30	35	45	50	-	-
1LA6220	-	40	-	55	-	-
1LA6223	35	40	50	55	-	-
1LA6253	40	45	50	60	-	-
1LA6280	40	50	55	65	-	-
1LA6283	40	50	55	65	-	-
1LA6310	45	55	60	75	-	-
1LA6313	-	55	60	75	-	-
1LA6316	48	58	63	78	-	-
1LA6317	-	58	63	78	-	-
1LA6318	-	-	63	78	-	-
1LA831.	35	40	45	45	50	50
1LA835.	40	45	50	50	55	55
1LA840.	45	50	55	55	60	60
1LA845.	55	55	60	60	70	70
1LL831.	25	25	30	30	35	35
1LL835.	30	30	35	35	40	40
1LL840.	35	35	35	35	40	40
1LL845.	40	35	40	40	45	45
1LA135.	30	35	40	-	-	-
1LA140.	35	40	45	45	-	-
1LA145.	40	45	50	50	55	55
1LA150.	50	50	55	55	65	65
1LA156.	60	55	60	60	70	70
1LL135.	20	20	25	-	-	-
1LL140.	25	25	30	30	-	-
1LL145.	30	30	30	30	35	35
1LL150.	35	30	35	35	40	40
1LL156.	40	35	35	35	40	40

1LA7 motors: and 1LA5 motors

Type:	1PH610	1PH613	1PH616	1PH618	1PH620	1PH622
	25	30	35	40	40	40

Exceptions:
1PH610 with n=1150 1/min T1 = 20 min

Parameter	Description	Data	Read/write
	1PH7(=1PA6): Shaft height: 100 132 160 180 225 T1 in min 25 30 35 40 40 1PL6: Shaft height: 180 225 T1 in min 30 30 1PH4: Shaft height: 100 132 160 T1 in min 25 30 35 If the utilization limit parameterized in P384 is exceeded, the diagnostic signal F021 is set. Precondition: P95 >=10 or P97=0		
P384* Mot Load Limits 384	Function parameter for the messages of the motor load cycle monitor. The parameter is valid for all motor data sets. Reference value is the rated motor power. Indices: i001: WARN When the entered load value is reached, a warning message is edited via B0150/B0151 i002: STOE When the entered load value is reached, a fault message is edited via B0152/B0153 Visualization parameter: r008 (Motora utilization) Setting instructions: 0: no evaluation	index1: 100 Min: 0 Max: 300 Unit: % Indices: 2 Type: O2	Menus: - Parameter menu + Diagnostics + Faults/warnings + Functions - Drive setting - Upread/free access Changeable in: - Drive setting - Drive setting - Ready
P399* Special Access 399	Function parameter for special access	Init: 0 Min: 0 Max: 65535 Unit: - Indices: - Type: O2	Menus: - Parameter menu + Functions - Upread/free access - Power section definition Changeable in: - Power section definition - Board configuration - Drive setting - Drive setting - Ready
P401* Fixed setpoint 1 401	Function parameter for entering fixed setpoint 1. The fixed setpoint is activated by means of the source specified by P580 and P581 by setting the relevant control word bits (see r551).	index1: 0,000 Min: -200,000 Max: 200,000 Unit: % Indices: 4 ,FDS Type: I4	Menus: - Parameter menu + Setpoint channel - Upread/free access Changeable in: - Drive setting - Ready
P402* Fixed setpoint 2 402	Function parameter for entering fixed setpoint 2. The fixed setpoint is activated by means of the source specified by P580 and P581 by setting the relevant control word bits (see r551).	index1: 0,000 Min: -200,000 Max: 200,000 Unit: % Indices: 4 ,FDS Type: I4	Menus: - Parameter menu + Setpoint channel - Upread/free access Changeable in: - Drive setting - Ready
P403* Fixed setpoint 3 403	Function parameter for entering fixed setpoint 3. The fixed setpoint is activated by means of the source specified by P580 and P581 by setting the relevant control word bits (see r551).	index1: 0,000 Min: -200,000 Max: 200,000 Unit: % Indices: 4 ,FDS Type: I4	Menus: - Parameter menu + Setpoint channel - Upread/free access Changeable in: - Drive setting - Ready

Parameter	Description	Data	Read/write
P404* Fixed setpoint 4 404	Function parameter for entering fixed setpoint 4. The fixed setpoint is activated by means of the source specified by P580 and P581 by setting the relevant control word bits (see r551).	index1: 0,000 Min: -200,000 Max: 200,000 Unit: % Indices: 4 ,FDS Type: I4	Menus: - Parameter menu + Setpoint channel - Upread/free access Changeable in: - Drive setting - Ready
P405* Fixed Setp 5 405	Function parameter for entering fixed setpoint 5.	index1: 0,000 Min: -200,000 Max: 200,000 Unit: % Indices: 4 ,FDS Type: I4	Menus: - Parameter menu + Setpoint channel - Upread/free access Changeable in: - Drive setting - Ready
P406* Fixed Setp 6 406	Function parameter for entering fixed setpoint 6.	index1: 0,000 Min: -200,000 Max: 200,000 Unit: % Indices: 4 ,FDS Type: I4	Menus: - Parameter menu + Setpoint channel - Upread/free access Changeable in: - Drive setting - Ready
P407* Fixed Setp 7 407	Function parameter for entering fixed setpoint 7.	index1: 0,000 Min: -200,000 Max: 200,000 Unit: % Indices: 4 ,FDS Type: I4	Menus: - Parameter menu + Setpoint channel - Upread/free access Changeable in: - Drive setting - Ready
P408* Fixed Setp 8 408	Function parameter for entering fixed setpoint 8.	index1: 0,000 Min: -200,000 Max: 200,000 Unit: % Indices: 4 ,FDS Type: I4	Menus: - Parameter menu + Setpoint channel - Upread/free access Changeable in: - Drive setting - Ready
P409* Fixed Setp 9 409	Function parameter for entering fixed setpoint 9.	index1: 0,000 Min: -200,000 Max: 200,000 Unit: % Indices: 4 ,FDS Type: I4	Menus: - Parameter menu + Setpoint channel - Upread/free access Changeable in: - Drive setting - Ready
P410* Fixed Setp 10 410	Function parameter for entering fixed setpoint 10.	index1: 0,000 Min: -200,000 Max: 200,000 Unit: % Indices: 4 ,FDS Type: I4	Menus: - Parameter menu + Setpoint channel - Upread/free access Changeable in: - Drive setting - Ready
P411* Fixed Setp 11 411	Function parameter for entering fixed setpoint 11.	index1: 0,000 Min: -200,000 Max: 200,000 Unit: % Indices: 4 ,FDS Type: I4	Menus: - Parameter menu + Setpoint channel - Upread/free access Changeable in: - Drive setting - Ready
P412* Fixed Setp 12 412	Function parameter for entering fixed setpoint 12.	index1: 0,000 Min: -200,000 Max: 200,000 Unit: % Indices: 4 ,FDS Type: I4	Menus: - Parameter menu + Setpoint channel - Upread/free access Changeable in: - Drive setting - Ready

Parameter	Description	Data	Read/write
P413* Fixed Setp 13 413	Function parameter for entering fixed setpoint 13.	index1: 0,000 Min: -200,000 Max: 200,000 Unit: % Indices: 4 ,FDS Type: I4	Menus: - Parameter menu + Setpoint channel - Upread/free access Changeable in: - Drive setting - Ready
P414* Fixed Setp 14 414	Function parameter for entering fixed setpoint 14.	index1: 0,000 Min: -200,000 Max: 200,000 Unit: % Indices: 4 ,FDS Type: I4	Menus: - Parameter menu + Setpoint channel - Upread/free access Changeable in: - Drive setting - Ready
P415* Fixed Setp 15 415	Function parameter for entering fixed setpoint 15.	index1: 0,000 Min: -200,000 Max: 200,000 Unit: % Indices: 4 ,FDS Type: I4	Menus: - Parameter menu + Setpoint channel - Upread/free access Changeable in: - Drive setting - Ready
P416* Fixed Setp 16 416	Function parameter for entering fixed setpoint 16.	index1: 0,000 Min: -200,000 Max: 200,000 Unit: % Indices: 4 ,FDS Type: I4	Menus: - Parameter menu + Setpoint channel - Upread/free access Changeable in: - Drive setting - Ready
P417* Src FSetp Bit2 417	BICO parameter for selecting the binector from which bit 2 for selecting a fixed setpoint is to be read in. For selecting a fixed setpoint, the states of bit 0 (P580), bit 1 (P581) and bit 3 (P418) are important.	index1: 0 Unit: - Indices: 2 ,BDS Type: L2 ,B	Menus: - Parameter menu + Setpoint channel - Upread/free access Changeable in: - Drive setting - Ready
P418* Src FSetp Bit3 418	BICO parameter for selecting the binector from which bit 3 for selecting a fixed setpoint is to be read in. For selecting a fixed setpoint, the states of bit 0 (P580), bit 1 (P581) and bit 2 (P417) are important.	index1: 0 Unit: - Indices: 2 ,BDS Type: L2 ,B	Menus: - Parameter menu + Setpoint channel - Upread/free access Changeable in: - Drive setting - Ready
r419 # Active FSetp 419	Visualization parameter for displaying the number of the fixed setpoint currently active.	Dec.Plc.: 0 Unit: - Indices: - Type: O2	Menus: - Parameter menu + Setpoint channel - Upread/free access
r420 Active FSetp 420	Visualization parameter for displaying the value of the fixed setpoint currently active.	Dec.Plc.: 3 Unit: % Indices: - Type: I4	Menus: - Parameter menu + Setpoint channel - Upread/free access
P421* MOP (max) 421	Function parameter for entering the upper limit for the internal motor operated potentiometer. The value output by the motor operated potentiometer is limited to the entered limit in a positive direction.	Init: 100,0 Min: -200,0 Max: 200,0 Unit: % Indices: - Type: I2	Menus: - Parameter menu + Setpoint channel - Upread/free access Changeable in: - Drive setting - Ready

Parameter	Description	Data	Read/write
P422* MOP (min) 422	Function parameter for entering the lower limit for the internal motor operated potentiometer. The value output by the motor operated potentiometer is limited to the entered limit in a negative direction.	Init: 0,0 Min: -200,0 Max: 200,0 Unit: % Indices: - Type: I2	Menus: - Parameter menu + Setpoint channel - Upread/free access Changeable in: - Drive setting - Ready
P423* Src MOP inv. 423	BICO parameter for selecting the binector from which the signal for inverting the motor operated potentiometer is to be read in. If a change is made from inversion to non-inversion or vice versa, the output signal of the motor operated potentiometer does not alter abruptly but in the form of a ramp with the acceleration times and deceleration times entered in P431 and P432	Init: 0 Unit: - Indices: - Type: L2 ,B	Menus: - Parameter menu + Setpoint channel - Upread/free access Changeable in: - Drive setting
r424 MOP (Out) 424	Visualization parameter for displaying the output value provided by the motor operated potentiometer for further processing.	Dec.Plc.: 2 Unit: 1/min Indices: - Type: I4	Menus: - Parameter menu + Setpoint channel - Upread/free access
P425* Conf MOP 425	Function parameter for configuring the motor operated potentiometer. xxx0 = MOP output is not stored during OFF Starting point is stipulated by P426 after ON. xxx1 = MOP output is stored after OFF. After ON, the MOP is set to this value. xx0x = Ramp generator is not effective in automatic mode. xx1x = Ramp generator is always effective. x0xx = Acceleration without initial rounding x1xx = Acceleration with initial rounding	Init: 110 Unit: - Indices: - Type: L2	Menus: - Parameter menu + Setpoint channel - Upread/free access Changeable in: - Drive setting
P426* StartValue MOP 426	Function parameter for entering the starting value for the motor operated potentiometer. With appropriate parameterization in P425, the output value of the motor operated potentiometer is set to this value after ON command.	Init: 0,0 Min: -200,0 Max: 200,0 Unit: % Indices: - Type: I2	Menus: - Parameter menu + Setpoint channel - Upread/free access Changeable in: - Drive setting
P427* Src Set MOP 427	BICO parameter for selecting the binector from which the command for setting the motor operated potentiometer is to be read in. When the edge of the signal rises, the set value is adopted.	Init: 0 Unit: - Indices: - Type: L2 ,B	Menus: - Parameter menu + Setpoint channel - Upread/free access Changeable in: - Drive setting
P428* Src SetV MOP 428	BICO parameter for selecting the connector from which the set value for the motor operated potentiometer is to be read in.	Init: 0 Unit: - Indices: - Type: L2 ,K ,K	Menus: - Parameter menu + Setpoint channel - Upread/free access Changeable in: - Drive setting
P429* Src Auto Setp 429	BICO parameter for selecting the connector from which the automatic setpoint for the motor operated potentiometer is to be read in.	Init: 0 Unit: - Indices: - Type: L2 ,K ,K	Menus: - Parameter menu + Setpoint channel - Upread/free access Changeable in: - Drive setting

Parameter	Description	Data	Read/write
P430* Src Manual/Auto 430	BICO parameter for selecting the binector from which the command for switching the motor oper. potentiometer between manual and automatic is to be read in. In automatic operation (signal logical 1), an external setpoint is adopted by the ramp generator of the motor operated potentiometer. After switchover to manual operation (signal logical 0), the motor operated potentiometer can be moved, beginning from the last setpoint for automatic operation.	Init: 0 Unit: - Indices: - Type: L2 ,B	Menus: - Parameter menu + Setpoint channel - Upread/free access Changeable in: - Drive setting
P431* MOP Accel Time 431	Function parameter for entering the acceleration time for the motor oper. potentiometer. The time is to be entered which the motor oper. potentiometer is to need for accelerating from zero to +/- 100 %. In the event of acceleration with initial rounding, the acceleration time increases. Rounding can be activated in P425.	Init: 10,0 Min: 0,0 Max: 1000,0 Unit: s Indices: - Type: O2	Menus: - Parameter menu + Setpoint channel - Upread/free access Changeable in: - Drive setting
P432* MOP Decel Time 432	Function parameter for entering the deceleration time for the motor oper. potentiometer. The time is to be entered which the motor oper. potentiometer is to need for decelerating from +/- 100 % to zero. In the event of deceleration with initial rounding, the deceleration time increases. Rounding can be activated in P425.	Init: 10,0 Min: 0,0 Max: 1000,0 Unit: s Indices: - Type: O2	Menus: - Parameter menu + Setpoint channel - Upread/free access Changeable in: - Drive setting
P433* Src AddSetpoint1 433	BICO parameter for selecting the connector from which additional setpoint 1 is to be read in. Additional setpoint 1 is added to the main setpoint in front of the ramp-function generator.	index1: 0 Unit: - Indices: 2 ,BDS Type: L2 ,K ,K	Menus: - Parameter menu + Setpoint channel - Upread/free access Changeable in: - Drive setting
P434 Scale Add Setp1 434	Function parameter for entering the scaling factor for additional setpoint 1.	index1: 100,0 Min: -300,0 Max: 300,0 Unit: % Indices: 4 ,FDS Type: I2	Menus: - Parameter menu + Setpoint channel - Upread/free access Changeable in: - Drive setting - Ready
P435* Motpot Limit 435	This parameter can be used to input the motor poteniometer limits in finer steps than with parameters P421, P422. P425=1xxx switches over to the high-resolution limits.	index1: 100,000 Min: -200,000 Max: 200,000 Unit: % Indices: 2 Type: I4	Menus: - Parameter menu - Upread/free access Changeable in: - Drive setting
P438* Src AddSetpoint2 438	BICO parameter for selecting the connector from which additional setpoint 2 is to be read in. Additional setpoint 2 is added to the main setpoint after the ramp function generator. Abrupt changes are directly passed on to the speed control.	index1: 0 Unit: - Indices: 2 ,BDS Type: L2 ,K ,K	Menus: - Parameter menu + Setpoint channel - Upread/free access Changeable in: - Drive setting
P439 Scale Add Setp2 439	Function parameter for entering the scaling factor for additional setpoint 2.	index1: 100,0 Min: -300,0 Max: 300,0 Unit: % Indices: 4 ,FDS Type: I2	Menus: - Parameter menu + Setpoint channel - Upread/free access Changeable in: - Drive setting - Ready
r441 Actual speed 441	Parameter is only necessary for the parameter model of PROFIdrive V3 standard. Parameter is only visible if PROFIdrive V3 is set.	Dec.Plc.: 0 Unit: - Indices: - Type: N4	Menus: - Parameter menu - Upread/free access

Parameter	Description	Data	Read/write
P443* Src MainSetpoint 443	BICO parameter for selecting the connector from which the main setpoint is to be read in.	index1: 0 Unit: - Indices: 2 ,BDS Type: L2 ,K ,K	Menus: - Parameter menu + Setpoint channel - Upread/free access Changeable in: - Drive setting
P444 Scale Main Setp 444	Function parameter for entering the scaling factor for the main setpoint.	index1: 100,0 Min: -300,0 Max: 300,0 Unit: % Indices: 4 ,FDS Type: I2	Menus: - Parameter menu + Setpoint channel - Upread/free access Changeable in: - Drive setting - Ready
r446 Main Setp (act) 446	Parameter is only necessary for the parameter model of PROFIdrive V3 standard. Parameter is only visible if PROFIdrive V3 is set.	Dec.Plc.: 0 Unit: - Indices: - Type: N4	Menus: - Parameter menu - Upread/free access
P448 Jog Setp 1 448	Function parameter for entering jogging setpoint 1. Selection of the jogging setpoints and the transition to Jogging mode take place by means of the control word bits, Jogging bit 0 and Jogging bit 1 (P568, P569).	index1: 0,0 Min: -200,0 Max: 200,0 Unit: % Indices: 4 ,FDS Type: I2	Menus: - Parameter menu + Setpoint channel - Upread/free access Changeable in: - Drive setting - Ready
P449 Jog Setp 2 449	Function parameter for entering jogging setpoint 2. Selection of the jogging setpoints and the transition to Jogging mode take place by means of the control word bits, Jogging bit 0 and Jogging bit 1 (P568, P569).	index1: 0,0 Min: -200,0 Max: 200,0 Unit: % Indices: 4 ,FDS Type: I2	Menus: - Parameter menu + Setpoint channel - Upread/free access Changeable in: - Drive setting - Ready
P450 Jog Setp 3 450	Function parameter for entering jogging setpoint 3. Selection of the jogging setpoints and the transition to Jogging mode take place by means of the control word bits, Jogging bit 0 and Jogging bit 1 (P568, P569).	index1: 0,0 Min: -200,0 Max: 200,0 Unit: % Indices: 4 ,FDS Type: I2	Menus: - Parameter menu + Setpoint channel - Upread/free access Changeable in: - Drive setting - Ready
P452* n(max,FWDSpeed) 452	Function parameter for entering the maximum speed in a positive direction of rotation. The value entered is for limiting the speed setpoint in a positive direction. If the actual speed exceeds the value entered, the speed-limitation controller reduces the permissible torque during operation with vectorial current control until the actual speed reaches the permissible maximum speed again. During operation with V/f control, the output frequency in the positive direction is limited to the value entered. Please note that induction motors, when operating in the field weakening range, must not be allowed to run at a speed higher than twice the field weakening frequency (P293).	index1: 100,0 Min: 0,0 Max: 200,0 Unit: % Indices: 4 ,FDS Type: I2	Menus: - Parameter menu + Setpoint channel - Drive setting - Upread/free access Changeable in: - Drive setting

Parameter	Description	Data	Read/write
P453* n(max,REVSpeed) 453	Function parameter for entering the maximum speed in a negative direction of rotation. The value entered is for limiting the speed setpoint in a negative direction. If the actual speed exceeds the value entered, the speed-limitation controller reduces the permissible torque during operation with vectorial current control until the actual speed reaches the permissible maximum speed again. During operation with V/f control, the output frequency in the negative direction is limited to the value entered . Please note that induction motors, when operating in the in the field weakening range, must not be allowed to run at a speed higher than twice the field weakening frequency (P293).	index1: -100,0 Min: -200,0 Max: 0,0 Unit: % Indices: 4 ,FDS Type: I2	Menus: - Parameter menu + Setpoint channel - Drive setting - Upread/free access Changeable in: - Drive setting
r461 n(set,speed sel) 461	Visualization parameter for displaying the speed setpoint after selection of the direction of rotation.	Dec.Plc.: 2 Unit: 1/min Indices: - Type: I4	Menus: - Parameter menu + Setpoint channel - Upread/free access
P462* Accel. Time 462	Function parameter for entering the acceleration time. The acceleration time relates to an acceleration of 0 to +/- 100 %. Entering a smoothing time constant not equal to 0 in P469 leads to rounding of the ramp generator output and to an increase of the set acceleration time.	index1: 0,50 Min: 0,00 Max: 600,00 Unit: s Indices: 4 ,FDS Type: O2	Menus: - Parameter menu + Setpoint channel - Upread/free access Changeable in: - Drive setting - Ready
P464* Decel. Time 464	Function parameter for entering the deceleration time. The deceleration time relates to a deceleration from +/- 100 % to 0. Entering a smoothing time constant not equal to 0 in P469 leads to rounding of the ramp generator output and to an increase of the set deceleration time.	index1: 0,50 Min: 0,00 Max: 600,00 Unit: s Indices: 4 ,FDS Type: O2	Menus: - Parameter menu + Setpoint channel - Upread/free access Changeable in: - Drive setting - Ready
P469* SmoothRGenOut 469	Function parameter for entering the smoothing time constant for the ramp generator output. Entering a value not equal to 0 leads to rounding of the ramp generator output and to an increase in the acceleration and deceleration times entered in P462 and P464.	index1: 0,000 Min: 0,000 Max: 6,000 Unit: s Indices: 4 ,FDS Type: O2	Menus: - Parameter menu + Setpoint channel - Upread/free access Changeable in: - Drive setting - Ready
P471 Scale Torq(PRE) 471	Function parameter for entering the scaling factor for the pre-control torque. The scaling is to be selected so that, during acceleration and deceleration and active pre-control, the torque setpoint formed by the speed controller is minimal.	index1: 100,0 Min: 0,0 Max: 200000,0 Unit: % Indices: 4 ,FDS Type: O4	Menus: - Parameter menu + Setpoint channel - Upread/free access Changeable in: - Drive setting - Ready
r472 n (set, lim) 472	Visualization parameter for displaying the speed setpoint after limitation.	Dec.Plc.: 2 Unit: 1/min Indices: - Type: I4	Menus: - Parameter menu + Setpoint channel - Upread/free access
r541 Mot ID R(Stator) 541	Visualization parameter for individual measurement results of the motor identification at standstill for the stator resistor + feeder resistances. Reference value is the rated motor impedance. Indices: i001 = Me U: result of measurement in phase direction U i002 = Me V: result of measurement in phase direction V i003 = Me W: result of measurement in phase direction W For future use with induction machines.	Dec.Plc.: 2 Unit: % Indices: 6 Type: O2	Menus: - Parameter menu + Functions - Upread/free access

Parameter	Description	Data	Read/write
r546 MotId X(leakage) 546	Visualization parameter for individual measurement results of the motor identification at standstill for referred total leakage reactance. For future use with induction machines.	Dec.Plc.: 2 Unit: % Indices: 3 Type: O2	Menus: - Parameter menu + Functions - Upread/free access
r548 Reference Angle 548	Parameter is only necessary for the parameter model of PROFIdrive V3 standard. Parameter is only visible if PROFIdrive V3 is set.	Dec.Plc.: 1 Unit: ° (alt) Indices: - Type: O2	Menus: - Parameter menu - Upread/free access - Drive setting
P549* Q.PosTest 549	Alternatively to P115=8, the position test can also be selected by means of this binector. On power up in position test mode, a stator current with U(-), V and W(+) is impressed, the absolute value of which is set via Isq (P270, P271). If the rotor is free to align itself, incorrect orientation of the motor encoder can be read at r286. Correction is made by rotating the encoder or by a suitable entry in P132. Test of direction of rotation, number of encoder increments and number of poles: If during the position test the "Enable positive direction of rotation" bit (in control word 1) is changed from 0 to 1, the impressed current indicator will slowly make one electrical revolution in the clockwise direction. KK186 must then make one complete revolution precisely in in the positive direction (0% > +100% > +199%/-200% > -100% > 0%). If KK186 makes more or less than one full revolution, then the number of pole pairs (P109) or number of encoder increments must be checked. If KK186 rotates in the wrong direction, then two phases must be swapped over and the encoder must be realigned.	Init: 0 Unit: - Indices: - Type: L2 ,B	Menus: - Parameter menu - Upread/free access Changeable in: - Drive setting
r550 Control Word 1 550	Visualization parameter for displaying control word 1. Bits 0 to 15 are displayed.	Dec.Plc.: 0 Unit: - Indices: - Type: V2	Menus: - Parameter menu + Control and status words - Upread/free access
r551 Control Word 2 551	Visualization parameter for displaying control word 2. Bits 16 to 31 are displayed.	Dec.Plc.: 0 Unit: - Indices: - Type: V2	Menus: - Parameter menu + Control and status words - Upread/free access
r552 Status Word 1 552	Visualization parameter for displaying status word 1. Bits 0 to 15 are displayed.	Dec.Plc.: 0 Unit: - Indices: - Type: V2	Menus: - Parameter menu + Control and status words - Upread/free access
r553 Status Word 2 553	Visualization parameter for displaying status word 2 Bits 16 to 31 are displayed.	Dec.Plc.: 0 Unit: - Indices: - Type: V2	Menus: - Parameter menu + Control and status words - Upread/free access
P554* Src ON/OFF1 554	BICO parameter for selecting the binector from which the ON/OFF command (control word 1, bit 0) is to be read in.	index1: 0 Unit: - Indices: 2 ,BDS Type: L2 ,B	Menus: - Parameter menu + Control and status words - Upread/free access Changeable in: - Drive setting - Ready

Parameter	Description	Data	Read/write
P555* Src1 OFF2(coast) 555	BICO parameter for selecting the 1st binector from which the OFF2 command (control word 1, bit 1) is to be read in. Further sources for the OFF2 command are selected in P556 and P557.	index1: 1 Unit: - Indices: 2 ,BDS Type: L2 ,B	Menus: - Parameter menu + Control and status words - Upread/free access Changeable in: - Drive setting - Ready
P556* Src2 OFF2(coast) 556	BICO parameter for selecting the 2nd binector from which the OFF2 command (control word 1, bit 1) is to be read in. Further sources for the OFF2 command are selected in P555 and P557.	index1: 1 Unit: - Indices: 2 ,BDS Type: L2 ,B	Menus: - Parameter menu + Control and status words - Upread/free access Changeable in: - Drive setting - Ready
P557* Src3 OFF2(coast) 557	BICO parameter for selecting the 3rd binector from which the OFF2 command (control word 1, bit 1) is to be read in. Further sources for the OFF2 command are selected in P555 and P556.	index1: 1 Unit: - Indices: 2 ,BDS Type: L2 ,B	Menus: - Parameter menu + Control and status words - Upread/free access Changeable in: - Drive setting - Ready
P558* Src1 OFF3(QStop) 558	BICO parameter for selecting the 1st binector from which the OFF3 command (control word 1, bit 2) is to be read in. Further sources for the OFF3 command are selected in P559 and P560.	index1: 1 Unit: - Indices: 2 ,BDS Type: L2 ,B	Menus: - Parameter menu + Control and status words - Upread/free access Changeable in: - Drive setting - Ready
P559* Src2 OFF3(QStop 559	BICO parameter for selecting the 2nd binector from which the OFF3 command (control word 1, bit 2) is to be read in. Further sources for the OFF3 command are selected in P558 and P560.	index1: 1 Unit: - Indices: 2 ,BDS Type: L2 ,B	Menus: - Parameter menu + Control and status words - Upread/free access Changeable in: - Drive setting - Ready
P560* Src3 OFF3(QStop) 560	BICO parameter for selecting the 3rd binector from which the OFF3 command (control word 1, bit 2) is to be read in. Further sources for the OFF3 command are selected in P558 and P559.	index1: 1 Unit: - Indices: 2 ,BDS Type: L2 ,B	Menus: - Parameter menu + Control and status words - Upread/free access Changeable in: - Drive setting - Ready
P561* Src InvRelease 561	BICO parameter for selecting the binector from which the command for releasing the inverter (control word 1, bit 3) is to be read in.	index1: 1 Unit: - Indices: 2 ,BDS Type: L2 ,B	Menus: - Parameter menu + Control and status words - Upread/free access Changeable in: - Drive setting - Ready

Parameter	Description	Data	Read/write
P562* Src RampGen Rel 562	BICO parameter for selecting the binector from which the command for releasing the ramp generator (control word 1, bit 4) is to be read in.	index1: 1 Unit: - Indices: 2 ,BDS Type: L2 ,B	Menus: - Parameter menu + Control and status words - Upread/free access Changeable in: - Drive setting - Ready
P563* Src RampGen Stop 563	BICO parameter for selecting the binector from which the command for starting the ramp generator (control word 1, bit 5) is to be read in.	index1: 1 Unit: - Indices: 2 ,BDS Type: L2 ,B	Menus: - Parameter menu + Control and status words - Upread/free access Changeable in: - Drive setting - Ready
P564* Src Setp Release 564	BICO parameter for selecting the binector from which the command for releasing the setpoint (control word 1, bit 6) is to be read in.	index1: 1 Unit: - Indices: 2 ,BDS Type: L2 ,B	Menus: - Parameter menu + Control and status words - Upread/free access Changeable in: - Drive setting - Ready
P565* Src1 Fault Reset 565	BICO parameter for selecting the 1st binector from which the command for acknowledging a fault (control word 1, bit 7) is to be read in. Further sources for the fault acknowledgement are selected in P566 and P567.	index1: 2107 Unit: - Indices: 2 ,BDS Type: L2 ,B	Menus: - Parameter menu + Control and status words - Upread/free access Changeable in: - Drive setting - Ready
P566* Src2 Fault Reset 566	BICO parameter for selecting the 2nd binector from which the command for acknowledging a fault (control word 1, bit 7) is to be read in. Further sources for the fault acknowledgement are selected in P566 and P567.	index1: 0 Unit: - Indices: 2 ,BDS Type: L2 ,B	Menus: - Parameter menu + Control and status words - Upread/free access Changeable in: - Drive setting - Ready
P567* Src3 Fault Reset 567	BICO parameter for selecting the 3rd binector from which the command for acknowledging a fault (control word 1, bit 7) is to be read in. Further sources for the fault acknowledgement are selected in P565 and P566.	index1: 0 Unit: - Indices: 2 ,BDS Type: L2 ,B	Menus: - Parameter menu + Control and status words - Upread/free access Changeable in: - Drive setting - Ready
P568* Src Jog Bit0 568	BICO parameter for selecting the binector from which bit 0 for selecting a jogging setpoint and the command for starting jogging operation (control word 1, bit 8) are to be read in. For selecting a jogging setpoint, the status of bit 1 (P569) is also important.	index1: 0 Unit: - Indices: 2 ,BDS Type: L2 ,B	Menus: - Parameter menu + Control and status words - Upread/free access Changeable in: - Drive setting - Ready

Parameter	Description	Data	Read/write
P569* Src Jog Bit1 569	BICO parameter for selecting the binector from which bit 0 for selecting a jogging setpoint and the command for starting jogging operation (control word 1, bit 9) are to be read in. For selecting a jogging setpoint, the status of bit 0 (P568) is also important.	index1: 0 Unit: - Indices: 2 ,BDS Type: L2 ,B	Menus: - Parameter menu + Control and status words - Upread/free access Changeable in: - Drive setting - Ready
P571* Src FWD Speed 571	BICO parameter for selecting the binector from which the command for releasing the positive direction of rotation (control word 1, bit 11) is to be read in.	index1: 1 Unit: - Indices: 2 ,BDS Type: L2 ,B	Menus: - Parameter menu + Control and status words - Upread/free access Changeable in: - Drive setting - Ready
P572* Src REV Speed 572	BICO parameter for selecting the binector from which the command for releasing the negative direction of rotation (control word 1, bit 12) is to be read in.	index1: 1 Unit: - Indices: 2 ,BDS Type: L2 ,B	Menus: - Parameter menu + Control and status words - Upread/free access Changeable in: - Drive setting - Ready
P573* Src MOP UP 573	BICO parameter for selecting the binector from which the command for increasing the motor operated potentiometer (control word 1, bit 13) is to be read in.	index1: 0 Unit: - Indices: 2 ,BDS Type: L2 ,B	Menus: - Parameter menu + Control and status words - Upread/free access Changeable in: - Drive setting - Ready
P574* Src MOP Down 574	BICO parameter for selecting the binector from which the command for lowering the motor operated potentiometer (control word 1, bit 14) is to be read in.	index1: 0 Unit: - Indices: 2 ,BDS Type: L2 ,B	Menus: - Parameter menu + Control and status words - Upread/free access Changeable in: - Drive setting - Ready
P575* Src No ExtFault1 575	BICO parameter for selecting the binector from which the command for tripping an external fault 1 (control word 1, bit 15) is to be read in.	index1: 1 Unit: - Indices: 2 ,BDS Type: L2 ,B	Menus: - Parameter menu + Control and status words - Upread/free access Changeable in: - Drive setting - Ready
P576* Src FuncDSetBit0 576	BICO parameter for selecting the binector from which bit 0 for selecting a function data set (control word 2, bit 16) is to be read in. For the selection of a function data set, the status of bit 1 (P577) is important.	index1: 0 Unit: - Indices: 2 ,BDS Type: L2 ,B	Menus: - Parameter menu + Control and status words - Upread/free access Changeable in: - Drive setting - Ready

Parameter	Description	Data	Read/write
P577* Src FuncDSetBit1 577	BICO parameter for selecting the binector from which bit 1 for selecting a function data set (control word 2, bit 17) is to be read in. For the selection of a function data set, the status of bit 0(P576) is important.	index1: 0 Unit: - Indices: 2 ,BDS Type: L2 ,B	Menus: - Parameter menu + Control and status words - Upread/free access Changeable in: - Drive setting - Ready
P580* Src FixSetp Bit0 580	BICO parameter for selecting the binector from which bit 0 for selecting a fixed setpoint (control word 2, bit 20) is to be read in. For the selection of a fixed setpoint, the statuses of bit 1 (P581), bit 2 (P417) and bit 3 (P418) are important.	index1: 0 Unit: - Indices: 2 ,BDS Type: L2 ,B	Menus: - Parameter menu + Control and status words - Upread/free access Changeable in: - Drive setting - Ready
P581* Src FixSetp Bit1 581	BICO parameter for selecting the binector from which bit 1 for selecting a fixed setpoint (control word 2, bit 21) is to be read in. For the selection of a fixed setpoint, the statuses of bit 0 (P580), bit 2 (P417) and bit 3 (P418) are important.	index1: 0 Unit: - Indices: 2 ,BDS Type: L2 ,B	Menus: - Parameter menu + Control and status words - Upread/free access Changeable in: - Drive setting - Ready
P583* Src Fly Release 583	BICO parameter for selecting the binector from which the command for releasing the "Flying Restart" function (control word 2, bit 23) is to be read in.	index1: 0 Unit: - Indices: 2 ,BDS Type: L2 ,B	Menus: - Parameter menu + Control and status words - Upread/free access Changeable in: - Drive setting - Ready
P584* Src Droop Rel 584	BICO parameter for selecting the binector from which the command for releasing the droop (control word 2, bit 24) is to be read in.	index1: 0 Unit: - Indices: 2 ,BDS Type: L2 ,B	Menus: - Parameter menu + Control and status words - Upread/free access Changeable in: - Drive setting - Ready
P585* Src n-Reg Rel 585	BICO parameter for selecting the binector from which the command for releasing the speed controller (control word 2, bit 25) is to be read in.	index1: 1 Unit: - Indices: 2 ,BDS Type: L2 ,B	Menus: - Parameter menu + Control and status words - Upread/free access Changeable in: - Drive setting - Ready
P586* Src No ExtFault2 586	BICO parameter for selecting the binector from which the command for tripping an external fault 2 (control word 2, bit 26) is to be read in. A signal, logical 0, causes a shutdown of the unit on faults after a waiting time of 200 ms after completion of pre-charging (converter status in r001 is larger than 10). With external fault 2, an external braking unit, for example, can be monitored.	index1: 1 Unit: - Indices: 2 ,BDS Type: L2 ,B	Menus: - Parameter menu + Control and status words - Upread/free access Changeable in: - Drive setting - Ready

Parameter	Description	Data	Read/write
P587* Src Master/Slave 587	BICO parameter for selecting the binector from which the command for switching between master and slave drive (control word 2, bit 27) is to be read in.	index1: 0 Unit: - Indices: 2 ,BDS Type: L2 ,B	Menus: - Parameter menu + Control and status words - Upread/free access Changeable in: - Drive setting - Ready
P588* Src No Ext Warn1 588	BICO parameter for selecting the binector from which the command for tripping an external warning 1 (control word 2, bit 28) is to be read in.	index1: 1 Unit: - Indices: 2 ,BDS Type: L2 ,B	Menus: - Parameter menu + Control and status words - Upread/free access Changeable in: - Drive setting - Ready
P589* Src No Ext Warn2 589	BICO parameter for selecting the binector from which the command for tripping an external warning 2 (control word 2, bit 29) is to be read in.	index1: 1 Unit: - Indices: 2 ,BDS Type: L2 ,B	Menus: - Parameter menu + Control and status words - Upread/free access Changeable in: - Drive setting - Ready
P590* Src BICO DSet 590	BICO parameter for selecting the binector from which the bit for selecting a BICO data set (control word 2, bit 30) is to be read in.	Init: 0 Unit: - Indices: - Type: L2 ,B	Menus: - Parameter menu + Control and status words - Upread/free access Changeable in: - Drive setting - Ready
P591* Src ContactorMsg 591	BICO parameter for selecting the binector from which the check-back message of a main contactor (control word 2, bit 31) is to be read in. If a source for the check-back message of the main contactor is not parameterized (input value = 0), the check-back time parameterized in P600 is waited out after the ON command and then precharging is started. If a source for the check-back message of the main contactor is parameterized (input value not equal to 0), a transition to precharging only takes place when the check-back message is logical 1.	index1: 0 Unit: - Indices: 2 ,BDS Type: L2 ,B	Menus: - Parameter menu + Control and status words - Upread/free access Changeable in: - Drive setting - Ready

Parameter	Description	Data	Read/write
P595* Cl/AntiClRot 595	The parameter defines the direction of rotation of the motor. P595=0: At positive setpoint setting, the drive rotates to the right. P595=1: At positive setpoint setting, the drive rotates to the left. The following quantities are influenced: a) Speed actual value b) Current setpoint c) Position actual value d) Absolute-value of multiturn encoder The practical application lies, for example, in continuous webs, so that all drives rotate in the direction of the material with positive setpoint setting. In the case of positioning tasks, the direction of motion and the zero position can be defined irrespective of the motor's direction of rotation. It is possible to imagine the function as follows: two phases are reversed on the drive (change in the rotating-field direction) and the speed actual value is inverted (restoring the sense of control) The pulse encoder outputs of SBM and SBR2 show the real shaft speed. P595 has no influence on these output signals!	Init: 0 Min: 0 Max: 1 Unit: - Indices: - Type: O2	Menus: - Parameter menu + Setpoint channel - Drive setting - Upread/free access Changeable in: - Drive setting
P596* R/L-ext.Encoder 596	Some speed combinations may make it necessary to switch over the direction of rotation of the external encoder so that the direction of rotation coincides with that ot the motor encoder. 0: Clockwise rotation, positive 1: Anticlockwise rotation, positive	Init: 0 Min: 0 Max: 1 Unit: - Indices: - Type: O2	Menus: - Parameter menu + Motor/encoder + Encoder data - Drive setting - Upread/free access Changeable in: - Drive setting - Drive setting
P599* SpeedCombination 599	As an alternative to the motor encoder, the external encoder can also be used as actual speed value source (setting value 100%). Current control continues to be based on the motor encoder. It is also possible to combine the actual speed value of the motor encoder and external encoder. 0% Motor encoder only 100% External encoder only	Init: 0,00 Min: 0,00 Max: 100,00 Unit: % Indices: - Type: O2	Menus: - Parameter menu + Motor/encoder + Encoder data - Drive setting - Upread/free access Changeable in: - Drive setting - Ready

Parameter	Description	Data	Read/write
P600* ContactorMsgTime 600	Function parameter for entering the checkback time for a main contactor. If no source has been parameterized for the main contactor checkback (P591 > 0), the parameterized checkback time has to elapse after the ON command and then precharging is commenced. If no checkback signal is given, error F001 is triggered. If no source has been parameterized for the main contactor checkback (P591 = 0), the parameterized checkback time has to elapse after the ON command and then precharging is commenced. During this time, the main contactor has to close. If a main contactor is available, a checkback time of at least 120 ms is recommended. The checkback time is applicable both for energizing and de-energizing the contactor. If the line contactor is controlled from the converter (via X9.7 and X9.9), the main contactor checkback time should be set to at least 120ms. Function diagrams: 91, 92, 93, 94	Init: 0 Min: 0 Max: 6000 Unit: ms Indices: - Type: O2	Menus: - Parameter menu + Sequence control - Upread/free access Changeable in: - Drive setting
P601* Src DigOutMCon 601 not Compact PLUS	BICO parameter for selecting the binector from which the command for actuating the main contactor (terminal -X9) is to be read out.	index1: 270 Unit: - Indices: 2 ,BDS Type: L2 ,B	Menus: - Parameter menu + Terminals - Upread/free access Changeable in: - Drive setting
P602* Excitation Time 602	Function parameter for entering the excitation time of a connected induction motor. The excitation time is the time which is to pass between pulse release and release of the ramp generator. In this time, the induction motor is magnetized to the flux setpoint and can then produce the required torque. During the excitation time, the bit "Flying Start active" (status word 2, bit 16) is set to logical 1.	Init: 0,00 Min: 0,00 Max: 10,00 Unit: s Indices: - Type: O2	Menus: - Parameter menu + Sequence control - Drive setting - Upread/free access Changeable in: - Drive setting - Drive setting
P603* De-MagnetizeTime 603	Function parameter for entering the de-excitation time for a connected induction motor. The de-excitation is the time which has to pass between turn-off of the drive and restarting. Within this time, restarting is prevented. During the de-excitation time, the flux in the induction motor is reduced. When a synchronous motor is connected, the de-excitation time is to be set to 0.	Init: 0,00 Min: 0,00 Max: 10,00 Unit: s Indices: - Type: O2	Menus: - Parameter menu + Sequence control - Drive setting - Upread/free access Changeable in: - Drive setting - Drive setting
P605 BrakeCtrl 605	Function parameter for selecting a brake control unit. 0 = Without brake 1 = Brake without check-back message 2 = Brake with check-back message	Init: 0 Min: 0 Max: 2 Unit: - Indices: - Type: O2	Menus: - Parameter menu + Sequence control - Upread/free access Changeable in: - Drive setting
P606 BrakeOpenTime 606	Function parameter for entering the brake opening time. If there is a brake present (P605), the setpoint release is delayed by the set time. The brake can thus open safely before starting of the motor.	Init: 0,20 Min: 0,00 Max: 10,00 Unit: s Indices: - Type: O2	Menus: - Parameter menu + Sequence control + Diagnostics + Messages/displays - Upread/free access Changeable in: - Drive setting

Parameter	Description	Data	Read/write
P607 BrakeCloseTime 607	Function parameter for entering the brake closing time. If there is a brake present (P605), blocking of the firing pulses is additionally delayed by the set time after an OFF command. The brake can thus safely close before the motor is de-energised. In addition, the turn-off time set in P0801 must be greater than the sum of the set times in P617 and P607.	Init: 0,10 Min: 0,00 Max: 10,00 Unit: s Indices: - Type: O2	Menus: - Parameter menu + Sequence control + Diagnostics + Messages/displays - Upread/free access Changeable in: - Drive setting
P608* Src BrakeOpen 608	BICO parameter for selecting the binectors from which the command for opening the brake is to be read in.	index1: 104 Unit: - Indices: 2 Type: L2 ,B	Menus: - Parameter menu + Sequence control - Upread/free access Changeable in: - Drive setting
P609* Src BrakeClose 609	BICO parameter for selecting the binectors from which the command for closing the brake is to be read in.	index1: 105 Unit: - Indices: 4 Type: L2 ,B	Menus: - Parameter menu + Sequence control - Upread/free access Changeable in: - Drive setting
P610* Src BrakeThresh1 610	BICO parameter for selecting the connector from which the actual value for comparison with brake threshold 1 is to be read in. If the current component (K0242) is used, magnetizing in the case of induction motors and voltage boost in the case of v/f control can be monitored. A torque-generating current component (K0184) only results after setpoint enable.	Init: 242 Unit: - Indices: - Type: L2 ,K	Menus: - Parameter menu + Sequence control - Upread/free access Changeable in: - Drive setting
P611 Brake Thresh 611	Function parameter for entering brake threshold 1, whereby, if this threshold is exceeded, the brake is to open.	Init: 0,0 Min: 0,0 Max: 200,0 Unit: % Indices: - Type: O2	Menus: - Parameter menu + Sequence control - Upread/free access Changeable in: - Drive setting - Ready
P612* Src SigBrakeOp 612	BICO parameter for selecting the binector from which the check-back message "Brake opened" is to be read in.	Init: 1 Unit: - Indices: - Type: L2 ,B	Menus: - Parameter menu + Sequence control - Upread/free access Changeable in: - Drive setting
P613* Src SigBrakeClos 613	BICO parameter for selecting the binector from which the check-back message "Brake closed" is to be read in.	Init: 0 Unit: - Indices: - Type: L2 ,B	Menus: - Parameter menu + Sequence control - Upread/free access Changeable in: - Drive setting
P614* Src PBrakeClos 614	BICO parameter for selecting the binector from which the command for closing a holding brake is to be read in.	Init: 0 Unit: - Indices: - Type: L2 ,B	Menus: - Parameter menu + Sequence control - Upread/free access Changeable in: - Drive setting
P615* Src BrakeThresh2 615	BICO parameter for selecting the connector from which the actual value for comparison with brake threshold 2 is to be read in. Preferably, the actual speed (KK0091) is selected as the actual value.	Init: 91 Unit: - Indices: - Type: L2 ,K	Menus: - Parameter menu + Sequence control - Upread/free access Changeable in: - Drive setting

Parameter	Description	Data	Read/write
P616 BrakeThresh2 616	Function parameter for entering brake threshold 2. If the actual value falls below this threshold after an OFF command, the brake is closed and a firing-pulse block is initiated by the brake control unit (B278). The value entered here should not be smaller than the turn-off value parameterized in P800.	Init: 0,5 Min: 0,0 Max: 200,0 Unit: % Indices: - Type: O2	Menus: - Parameter menu + Sequence control - Upread/free access Changeable in: - Drive setting - Ready
P617 BrakeThresh2Time 617	Function parameter for entering the time by which closing of the brakes is to be delayed after an OFF command. If the threshold value falls below brake threshold 2 after an OFF command, closing of the brake is delayed by the time entered.	Init: 0,00 Min: 0,00 Max: 100,00 Unit: s Indices: - Type: O2	Menus: - Parameter menu + Sequence control + Diagnostics + Messages/displays - Upread/free access Changeable in: - Drive setting - Ready
P630* AnaIn Scale 630	Function parameter for scaling the analog input on the terminal strip of the basic unit. Incoming signals are multiplied by the parameter value entered.	Init: 1,00 Min: 0,00 Max: 100,00 Unit: - Indices: - Type: O2	Menus: - Parameter menu + Terminals - Upread/free access Changeable in: - Drive setting - Ready
P631* AnaIn Offset 631	Function parameters for entering the offset for the analog input on the terminal strip of the basic unit. The offset is added to the analog input signal. Indices: i001 = CU-1: Offset of the analog input 1 i002 = CU-2: offset of the analog input 2	Init: 0,00 Min: -100,00 Max: 100,00 Unit: % Indices: - Type: I2	Menus: - Parameter menu + Terminals - Upread/free access Changeable in: - Drive setting
P632* AnaIn Conf 632	Function parameter for configuring the analog input on the terminal strip of the basic unit.The plus or minus sign is selected for the read-in analog value which is to be provided. 0 = Do not change sign 1 = Always pass on value with a plus sign 2 = Invert sign 3 = Always pass on value with a minus sign The sign can be altered again by means of the "Invert Analog Input" command (P633).	Init: 0 Min: 0 Max: 3 Unit: - Indices: - Type: O2	Menus: - Parameter menu + Terminals - Upread/free access Changeable in: - Drive setting
P633* Src AnaIn Invert 633	BICO parameter for selecting the binector from which the command for inverting the analog input signal on the terminals strip of the basic unit is to be read in.	Init: 0 Unit: - Indices: - Type: L2 ,B	Menus: - Parameter menu + Terminals - Upread/free access Changeable in: - Drive setting
P634 AnaIn Smooth 634	Function parameter for entering the smoothing time constant for the analog inputs on the terminal strip of the basic unit. Indices: i001 = CU-1: Smoothing time constant of analog input 1 i002 = CU-2: smoothing time constant of analog input 2	Init: 0,0 Min: 0,0 Max: 100,0 Unit: ms Indices: - Type: O2	Menus: - Parameter menu + Terminals - Upread/free access Changeable in: - Drive setting - Ready

Parameter	Description	Data	Read/write
P635* AnaIn Window 635	Function parameter for entering the window for the analog input on the terminal strip of the basic unit. Only when the analog input signal has been changed by the set parameter value in relation to its old comparison value is this change passed on. The new signal value is stored and serves as the comparison value in the next processing cycle. Entry of a parameter value not equal to 0 suppresses signal noise. Abrupt setpoint changes, in contrast, are passed on without any delay.	Init: 0,00 Min: 0,00 Max: 100,00 Unit: % Indices: - Type: O2	Menus: - Parameter menu + Terminals - Upread/free access Changeable in: - Drive setting - Ready
P636* Src AnaIn Rel 636	BICO parameter for selecting the binector from which the command for releasing the analog inputs on the terminal strip of the basic unit is to be read in. Without a release, the setpoints provided by the analog inputs is at 0. Indices: i001 = CU-1: Release of the analog input 1 i002 = CU-2: Release of the analog input 2	Init: 1 Unit: - Indices: - Type: L2 ,B	Menus: - Parameter menu + Terminals - Upread/free access Changeable in: - Drive setting
r637 AnaIn Setp 637	Visualization parameter for displaying the setpoint provided by the analog input. i001 = CU-1: Setpoint of the analog input 1 i002 = CU-2: Setpoint of the analog input 2	Dec.Plc.: 1 Unit: % Indices: - Type: I2	Menus: - Parameter menu + Terminals - Upread/free access
P640* Src AnaOut 640	BICO parameter for selecting the connectors whose values are to be output at the analog outputs of the terminal strip for the basic unit. Indices: i001 = CU-1: Connector number to analog output 1 i002 = CU-2: connector number to analog output 2	index1: 0 Unit: - Indices: 2 ,BDS Type: L2 ,K	Menus: - Parameter menu + Terminals - Upread/free access Changeable in: - Drive setting - Ready
P641* AnaOut Conf 641	Function parameter for configuring the analog output on the terminal strip of the basic unit. A selection is made as to the sign (plus or minus) with which the value of of the connector selected in P640 is to be output at the analog output. 0 = Do not change sign 1 = Always output value with a plus sign 2 = Invert the sign 3 = Always output the value with a minus sign	index1: 0 Min: 0 Max: 3 Unit: - Indices: 4 ,FDS Type: O2	Menus: - Parameter menu + Terminals - Upread/free access Changeable in: - Drive setting
P642 AnaOut Smooth 642	Function parameter for entering the smoothing time constant for the analog output on the terminal strip of the basic unit.	index1: 0 Min: 0 Max: 100 Unit: ms Indices: 4 ,FDS Type: O2	Menus: - Parameter menu + Terminals - Upread/free access Changeable in: - Drive setting - Ready
P643 CU AnalogOutGain 643	Function parameter for scaling the analog output on the terminal strip of the basic unit. With the help of the parameter value entered, the analog voltage is determined to which an internal signal value of 100 % (4000 H) is to correspond.	index1: 10,0 Min: -200,0 Max: 200,0 Unit: V Indices: 4 ,FDS Type: I2	Menus: - Parameter menu + Terminals - Upread/free access Changeable in: - Drive setting - Ready
P644 AnaOut Offset 644	Function parameter for entering the offset for the analog input on the terminal strip of the basic unit. The offset is added to the analog output signal which has already been scaled (P643).	index1: 0,0 Min: -10,0 Max: 10,0 Unit: V Indices: 4 ,FDS Type: I2	Menus: - Parameter menu + Terminals - Upread/free access Changeable in: - Drive setting - Ready

Parameter	Description	Data	Read/write
P645* Src Conf DigIn4 645	If parameter value 5 is set in parameter P647/648, then this binector is used to change the transfer of the position measurement between rising and falling edge. Index 1: enable/disable position measurement recording Index 2: selection of edge If the binector has the value 0, the position measurement is taken on a rising edge. If the binector has the value 1, the position measurement is taken on a falling edge.	index1: 1 Unit: - Indices: 2 Type: L2 ,B	Menus: - Parameter menu + Terminals - Upread/free access Changeable in: - Drive setting - Ready
r646 Status DigIn 646	Visualization parameter for displaying the signal level at the digital inputs and outputs of the terminal strip for the basic unit.	Dec.Plc.: 0 Unit: - Indices: - Type: V2	Menus: - Parameter menu + Terminals - Upread/free access
P647* Conf DigIn4 647	Function parameter for configuring digital input 4. 0 = Use as a normal digital input 1 = OFF2 with rising edge 2 = OFF2 with falling edge 3 = Adopt measured value of the position with rising edge 4 = Adopt measured value of the position with falling edge 5 = Adopt measured value of the position depending on the binector In order to use terminal -X101/6 as a digital input, P654 must be set to 0 in both indices.	index1: 0 Min: 0 Max: 5 Unit: - Indices: 2 ,BDS Type: O2	Menus: - Parameter menu + Terminals - Upread/free access Changeable in: - Drive setting
P648* Conf DigIn5 648	Function parameter for configuring digital input 5. 0 = Use as a normal digital input 1 = OFF2 with rising edge 2 = OFF2 with falling edge 3 = Adopt measured value of the position with rising edge 4 = Adopt measured value of the position with falling edge 5 = Adopt measured value depending on binector	index1: 0 Min: 0 Max: 5 Unit: - Indices: 2 ,BDS Type: O2	Menus: - Parameter menu + Terminals - Upread/free access Changeable in: - Drive setting
P649* Src Conf DigIn5 649	If parameter value 5 is set in parameter P647/648, then this binector is used to change the transfer of the position measurement between rising and falling edge. Index 1: enable/disable position measurement recording Index 2: selection of edge If the binector has the value 0, the position measurement is taken on a rising edge. If the binector has the value 1, the position measurement is taken on a falling edge.	index1: 1 Unit: - Indices: 2 Type: L2 ,B	Menus: - Parameter menu + Terminals - Upread/free access Changeable in: - Drive setting - Ready
P651* Src DigOut1 651	BICO parameter for selecting the binector whose value is to be output at terminal -X101/3 of the terminal strip for the basic unit. In order to use terminal -X101/3 as a digital input, both indices must be set to 0.	index1: 0 Unit: - Indices: 2 ,BDS Type: L2 ,B	Menus: - Parameter menu + Terminals - Upread/free access Changeable in: - Drive setting - Ready
P652* Src DigOut2 652	BICO parameter for selecting the binector whose value is to be output at terminal -X101/4 of the terminal strip for the basic unit. In order to use terminal -X101/4 as a digital input, both indices must be set to 0.	index1: 0 Unit: - Indices: 2 ,BDS Type: L2 ,B	Menus: - Parameter menu + Terminals - Upread/free access Changeable in: - Drive setting - Ready

Parameter	Description	Data	Read/write
P653* Src DigOut3 653	BICO parameter for selecting the binector whose value is to be output at terminal -X101/5 of the terminal strip for the basic unit. In order to use terminal -X101/5 as a digital input, both indices must be set to 0.	index1: 0 Unit: - Indices: 2 ,BDS Type: L2 ,B	Menus: - Parameter menu + Terminals - Upread/free access Changeable in: - Drive setting - Ready
P654* Src DigOut4 654	BICO parameter for selecting the binector whose value is to be output at terminal -X101/6 of the terminal strip for the basic unit. In order to use terminal -X101/6 as a digital input, both indices must be set to 0.	index1: 0 Unit: - Indices: 2 ,BDS Type: L2 ,B	Menus: - Parameter menu + Terminals - Upread/free access Changeable in: - Drive setting - Ready
P655* EB1 Signal Type 655	Parameter for selection of the signal type for analog input 1 on EB1. 0 = +/- 10 V 1 = 0 ... 20 mA Index 1: AI1 of the first inserted EB1 Index 4: AI1 of the second inserted EB1 Index 2, 3, 5 and 6: no significance	index1: 0 Min: 0 Max: 1 Unit: - Indices: 6 Type: O2	Menus: - Parameter menu + Terminals - Upread/free access Changeable in: - Drive setting
P656* EB1 AnaInNorm 656	Parameter for normalization of the analog inputs on EB1. Incoming signals are multiplied by the entered parameter value. Index 1 to 3: AI1 to AI3 of the first inserted EB1 Index 4 to 6: AI1 to AI3 of the second inserted EB1	index1: 1,00 Min: 0,00 Max: 100,00 Unit: - Indices: 6 Type: O2	Menus: - Parameter menu + Terminals - Upread/free access Changeable in: - Drive setting - Ready
P657 EB1 AnaIn Offset 657	Parameter for entering the offset for the analog inputs on EB1. The offset is added to the already scaled analog input signal. Index 1 to 3: AI1 to AI3 of the first inserted EB1 Index 4 to 6: AI1 to AI3 of the second inserted EB1	index1: 0,00 Min: -100,00 Max: 100,00 Unit: - Indices: 6 Type: I2	Menus: - Parameter menu + Terminals - Upread/free access Changeable in: - Drive setting - Ready
P658* EB1 AnaIn Conf 658	Parameter for configuring the analog inputs on EB1. Selection is made here of the sign with which the read-in analog value has to be provided. 0 = Do not change sign 1 = Always pass on value with positive sign 2 = Invert sign 3 = Always pass on value with negative sign Index 1 to 3: AI1 to AI3 of the first inserted EB1 Index 4 to 6: AI1 to AI3 of the second inserted EB1 The sign can be changed again by the "Invert analog input" command (P659)	index1: 0 Min: 0 Max: 3 Unit: - Indices: 6 Type: O2	Menus: - Parameter menu + Terminals - Upread/free access Changeable in: - Drive setting
P659* EB1SrcAnaIn inv. 659	Parameter for selecting the binector from which the command to invert the analog input signal on EB1 has to be read in. Index 1 to 3: AI1 to AI3 of the first inserted EB1 Index 4 to 6: AI1 to AI3 of the second inserted EB1	index1: 0 Unit: - Indices: 6 Type: L2 ,B	Menus: - Parameter menu + Terminals - Upread/free access Changeable in: - Drive setting
P660* EB1 AnaInSmooth2 660	Parameter for entering the smoothing time constants for the analog inputs on EB1. Index 1 to 3: AI1 to AI3 of the first inserted EB1 Index 4 to 6: AI1 to AI3 of the second inserted EB1	index1: 0 Min: 0 Max: 1000 Unit: ms Indices: 6 Type: O2	Menus: - Parameter menu + Terminals - Upread/free access Changeable in: - Drive setting - Ready

Parameter	Description	Data	Read/write
P661* EB1 SrcAnaInRel 661	Parameter for selecting the binectors from which the commands to enable the analog inputs on EB1 have to be read in. Without an enable, the setpoint provided by the analog input is at 0. Index 1 to 3: AI1 to AI3 of the first inserted EB1 Index 4 to 6: AI1 to AI3 of the second inserted EB1	index1: 1 Unit: - Indices: 6 Type: L2 ,B	Menus: - Parameter menu + Terminals - Upread/free access Changeable in: - Drive setting
r662 EB1 AnaInSetp 662	Visualization parameter for displaying the setpoints which are provided by the analog inputs of EB1. Index 1 to 3: AI1 to AI3 of the first inserted EB1 Index 4 to 6: AI1 to AI3 of the second inserted EB1	Dec.Plc.: 2 Unit: % Indices: 6 Type: I2	Menus: - Parameter menu + Terminals - Upread/free access
P663* EB1 SrcAnaOut 663	Parameter for selecting the connectors whose values have to be output at the analog outputs on EB1. Index 1 and 2: AO1 and AO2 of the first inserted EB1 Index 3 and 4: AO1 and AO2 of the second inserted EB1	index1: 0 Unit: - Indices: 4 Type: L2 ,K	Menus: - Parameter menu + Terminals - Upread/free access Changeable in: - Drive setting - Ready
P664* EB1 AnaOut Conf 664	Parameter for configuring the analog outputs on EB1. Selection of the sign is made here with which the value of the connector selected in P663 has to be output at the analog output. 0 = Do not change sign 1 = Always output value with positive sign 2 = Invert sign 3 = Always output value with negative sign Index 1 and 2: AO1 and AO2 of the first inserted EB1 Index 3 and 4: AO1 and AO2 of the second inserted EB1	index1: 0 Min: 0 Max: 3 Unit: - Indices: 4 Type: O2	Menus: - Parameter menu + Terminals - Upread/free access Changeable in: - Drive setting - Ready
P665* EB1 AnaOutSmooth 665	Parameter for entering the smoothing time constants for the analog outputs on EB1. Index 1 and 2: AO1 and AO2 of the first inserted EB1 Index 3 and 4: AO1 and AO2 of the second inserted EB1	index1: 0 Min: 0 Max: 10000 Unit: - Indices: 4 Type: O2	Menus: - Parameter menu + Terminals - Upread/free access Changeable in: - Drive setting - Ready
P666* EB1AnaOutNorm 666	Parameter for scaling the analog outputs on EB1. With the help of the entered parameter value, the analog output voltage to which an internal signal value of 100% (4000 H) should correspond is determined. Index 1 and 2: AO1 and AO2 of the first inserted EB1 Index 3 and 4: AO1 and AO2 of the second inserted EB1	index1: 10,00 Min: -200,00 Max: 200,00 Unit: V Indices: 4 Type: I2	Menus: - Parameter menu + Terminals - Upread/free access Changeable in: - Drive setting - Ready
P667 EB1 AnaOutOffset 667	Parameter for entering the offset for the analog outputs on EB1. The offset is added to the already scaled analog output signal. Index 1 and 2: AO1 and AO2 of the first inserted EB1 Index 3 and 4: AO1 and AO2 of the second inserted EB1	index1: 0,00 Min: -200,00 Max: 200,00 Unit: V Indices: 4 Type: I2	Menus: - Parameter menu + Terminals - Upread/free access Changeable in: - Drive setting - Ready
r668 EB1 AnaOut Value 668	Visualization parameter for displaying the actual values which are connected to the analog outputs of EB1. Index 1 and 2: AO1 and AO2 of the first inserted EB1 Index 3 and 4: AO1 and AO2 of the second inserted EB1	Dec.Plc.: 2 Unit: % Indices: 4 Type: I2	Menus: - Parameter menu + Terminals - Upread/free access

Parameter	Description	Data	Read/write
P669* EB1 Src DigOut 669	Parameter for selecting the binectors whose values have to be output at terminal -X480/43 to 46 of EB1. The relevant index of the binector has to be set to 0 in order to use terminal -X480/43 to 48 as digital inputs. Index 1 to 4: DO1 to DO4 of the first inserted EB1 Index 5 to 8: DO1 to DO4 of the second inserted EB1	index1: 0 Unit: - Indices: 8 Type: L2 ,B	Menus: - Parameter menu + Terminals - Upread/free access Changeable in: - Drive setting - Ready
r670 EB1 TerminalDisp 670	Visualization parameter for displaying the signal level of the digital inputs and outputs of EB1. Index 1: First inserted EB1 Index 2: Second inserted EB1	Dec.Plc.: 0 Unit: - Indices: 2 Type: V2	Menus: - Parameter menu + Terminals - Upread/free access
r673 EB2 Termin Disp 673	Visualization parameter for displaying the signal level of the digital inputs and outputs of EB2 Index 1: First inserted EB2 Index 2: Second inserted EB2	Dec.Plc.: 0 Unit: - Indices: 2 Type: V2	Menus: - Parameter menu + Terminals - Upread/free access
P674* EB2 Src RelayOut 674	Parameter for selecting the binectors for activation of the relay outputs on EB2. Index 1 to 4: Relay outputs of the first inserted EB2 Index 5 to 8: Relay outputs of the second inserted EB2	index1: 0 Unit: - Indices: 8 Type: L2 ,B	Menus: - Parameter menu + Terminals - Upread/free access Changeable in: - Drive setting - Ready
P675* EB2 Signal Type 675	Parameter for selecting the signal type for the analog input on EB2. 0 = +/- 10 V 1 = 0 ... 20 mA Index 1: First inserted EB2 Index 2: Second inserted EB2	index1: 0 Min: 0 Max: 1 Unit: - Indices: 2 Type: O2	Menus: - Parameter menu + Terminals - Upread/free access Changeable in: - Drive setting
P676* EB2 AnaInNorm 676	Parameter for normalizing the analog input on EB2. Incoming signals are multiplied by the entered parameter value. Index 1: First inserted EB2 Index 2: Second inserted EB2	index1: 1,00 Min: 0,00 Max: 100,00 Unit: - Indices: 2 Type: O2	Menus: - Parameter menu + Terminals - Upread/free access Changeable in: - Drive setting - Ready
P677 EB2 AnaInOffset 677	Parameter for entering the offset for the analog input on EB2. The offset is added to the already scaled analog input signal. Index 1: First inserted EB2 Index 2: Second inserted EB2	index1: 0,00 Min: -100,00 Max: 100,00 Unit: - Indices: 2 Type: I2	Menus: - Parameter menu + Terminals - Upread/free access Changeable in: - Drive setting
P678* EB2 AnaInConf 678	Function parameter for configuring the analog input on EB2. Selection is made here of the sign with which the read-in analog value has to be provided. 0 = Do not change sign 1 = Always pass on value with positive sign 2 = Invert sign 3 = Always pass on value with negative sign Index 1: First inserted EB2 Index 2: Second inserted EB2 The sign can be changed again by the "Invert analog input" command (P681).	index1: 0 Min: 0 Max: 3 Unit: - Indices: 2 Type: O2	Menus: - Parameter menu + Terminals - Upread/free access Changeable in: - Drive setting

Parameter	Description	Data	Read/write
P679* EB2 Src AnaInInv 679	Parameter for selecting the binector from which the command to invert the analog input signal on EB2 has to be read in. Index 1: First inserted EB2 Index 2: Second inserted EB2	index1: 0 Unit: - Indices: 2 Type: L2 ,B	Menus: - Parameter menu + Terminals - Upread/free access Changeable in: - Drive setting
P680* EB2 AnaInSmooth2 680	Parameter for entering the smoothing time constant for the analog input on EB2. Index 1: First inserted EB2 Index 2: Second inserted EB2	index1: 0 Min: 0 Max: 1000 Unit: ms Indices: 2 Type: O2	Menus: - Parameter menu + Terminals - Upread/free access Changeable in: - Drive setting - Ready
P681* EB2 Src AnaInRel 681	Parameter for selecting the binector from which the command to enable the analog input on EB2 has to be read in. Without an enable, the setpoint provided by the analog input is at 0. Index 1: First inserted EB2 Index 2: Second inserted EB2	index1: 1 Unit: - Indices: 2 Type: L2 ,B	Menus: - Parameter menu + Terminals - Upread/free access Changeable in: - Drive setting
r682 EB2 AnaIn Setp 682	Visualization parameter for displaying the setpoint which is provided by the analog input of EB2. Index 1: First inserted EB2 Index 2: Second inserted EB2	Dec.Plc.: 2 Unit: % Indices: 2 Type: I2	Menus: - Parameter menu + Terminals - Upread/free access
P683* EB2 Src AnaOut 683	Parameter for selecting the connector whose value has to be output at the analog output on EB2. Index 1: First inserted EB2 Index 2: Second inserted EB2	index1: 0 Unit: - Indices: 2 Type: L2 ,K	Menus: - Parameter menu + Terminals - Upread/free access Changeable in: - Drive setting - Ready
P684* EB2 AnaOutConf 684	Parameter for configuring the analog output on EB2. The sign with which the value of the connector selected in P683 has to be output at the analog output is selected here. 0 = Do not change sign 1 = Always output value with positive sign 2 = Invert sign 3 = Always output value with negative sign Index 1: First inserted EB2 Index 2: Second inserted EB2	index1: 0 Min: 0 Max: 3 Unit: - Indices: 2 Type: O2	Menus: - Parameter menu + Terminals - Upread/free access Changeable in: - Drive setting - Ready
P685* EB2AnaOutSmooth 685	Parameter for entering the smoothing time constant for the analog output on EB2. Index 1: First inserted EB2 Index 2: Second inserted EB2	index1: 0 Min: 0 Max: 10000 Unit: - Indices: 2 Type: O2	Menus: - Parameter menu + Terminals - Upread/free access Changeable in: - Drive setting - Ready
P686* EB2 AnaOutNorm 686	Parameter for scaling the analog output on EB2. With the help of the entered parameter value, it is determined which analog output voltage an internal signal value of 100% (4000 H) should correspond to. Index 1: First inserted EB2 Index 2: Second inserted EB2	index1: 10,00 Min: -200,00 Max: 200,00 Unit: V Indices: 2 Type: I2	Menus: - Parameter menu + Terminals - Upread/free access Changeable in: - Drive setting - Ready

Parameter	Description	Data	Read/write
P687 EB2 AnaOutOffset 687	Parameter for entering the offset for the analog output on EB2. The offset is added to the already scaled analog output signal. Index 1: First inserted EB2 Index 2: Second inserted EB2	index1: 0,00 Min: -200,00 Max: 200,00 Unit: V Indices: 2 Type: I2	Menus: - Parameter menu + Terminals - Upread/free access Changeable in: - Drive setting - Ready
r688 EB2 AnaOut Value 688	Visualization parameter for displaying the actual value which is connected to the analog output of EB2. Index 1: First inserted EB2 Index 2: Second inserted EB2	Dec.Plc.: 2 Unit: % Indices: 2 Type: I2	Menus: - Parameter menu + Terminals - Upread/free access
P690* SCI AnaIn Conf 690 not Compact PLUS	Configuration of the analog inputs of the SCI1 boards. It determines the type of input signals. Parameter values Terminals Terminals X428/3, 6, 9 X428/5, 8, 11 0: - 10 V ... + 10 V - 20 mA ... + 20 mA 1: 0 V ... + 10 V 0 mA ... + 20 mA 2: 4 mA ... + 20 mA Notes: - Only one signal can be processed per input. Voltage or current signals can be evaluated alternatively. - Voltage and current signals must be connected at different terminals. - The settings 1and 2 only permit unipolar signals, i.e. the internal process variables are also unipolar. - With setting 2 an input current< 2 mA results in a fault trip (wire-break monitoring). - The offset compensation of the analog inputs is carried out via parameter P692. Indices: i001: Slave 1, analog input 1 i002: Slave 1, analog input 2 i003: Slave 1, analog input 3 i004: Slave 2, analog input 1 i005: Slave 2, analog input 2 i006: Slave 2, analog input 3	index1: 0 Min: 0 Max: 2 Unit: - Indices: 6 Type: O2	Menus: - Parameter menu + Communication + SCB/SCI - Upread/free access Changeable in: - Drive setting - Ready
P691* SCI AnaInSmooth 691 not Compact PLUS	Smoothing time constant of the analog inputs of the SCI boards Formula: T=2 ms*2 power P691 Indices: see P690	index1: 2 Min: 0 Max: 14 Unit: - Indices: 6 Type: O2	Menus: - Parameter menu + Communication + SCB/SCI - Upread/free access Changeable in: - Drive setting - Ready
P692* SCI AnaIn Offset 692 not Compact PLUS	Zero balancing of the analog inputs of the SCI boards For setting notes see operating instructions for SCI Indices: see P690	index1: 0,00 Min: -20,00 Max: 20,00 Unit: V Indices: 6 Type: I2	Menus: - Parameter menu + Communication + SCB/SCI - Upread/free access Changeable in: - Drive setting - Ready
P693* SCI AnaOut ActV 693 not Compact PLUS	Actual-value output via analog outputs of the SCI boards Setting notes: Input of the parameter number of the variable whose value is to be output; for details see operating instructions for SCI Indices: i001: Slave 1, analog output 1 i002: Slave 1, analog output 2 i003: Slave 1, analog output 3 i004: Slave 2, analog output 1 i005: Slave 2, analog output 2 i006: Slave 2, analog output 3	index1: 0 Unit: - Indices: 6 Type: L2 ,K	Menus: - Parameter menu + Communication + SCB/SCI - Upread/free access Changeable in: - Drive setting - Ready

Parameter	Description	Data	Read/write
P694* SCI AnaOut Gain 694 not Compact PLUS	Gain for the analog outputs via the SCI slaves Setting instruction: see operating instructions for SCI For indices: see P690	index1: 10,00 Min: -320,00 Max: 320,00 Unit: V Indices: 6 Type: I2	Menus: - Parameter menu + Communication + SCB/SCI - Upread/free access Changeable in: - Drive setting - Ready
P695* SCI AnaOutOffset 695 not Compact PLUS	Offset of the analog outputs of the SCI boards Setting instruction: see operating instructions for SCI Indices: see P690	index1: 0,00 Min: -100,00 Max: 100,00 Unit: V Indices: 6 Type: I2	Menus: - Parameter menu + Communication + SCB/SCI - Upread/free access Changeable in: - Drive setting - Ready
P696* SCB Protocol 696 not Compact PLUS	SCB board can be operated as - master for the SCI boards or as - communications board (see SCB operating instructions). Parameter values: 0 = master for SCI boards 1 = 4-wire USS 2 = 2-wire USS 3 = Peer-to-Peer 4 = not connected 5 = not connected Please keep in mind that every change of parameter value leads to a new initialization of the SCB and the CUMC or CUVC. Therefore this parameter cannot be kept in a download file, since initialization has the effect that the parameters loaded on the converter are not accepted. In the case of a factory setting via SCB2, this parameter is not reset.	Init: 0 Min: 0 Max: 5 Unit: - Indices: - Type: O2	Menus: - Parameter menu + Communication + SCB/SCI - Board configuration - Upread/free access Changeable in: - Board configuration

Parameter	Description	Data	Read/write
r697 SCB Diagnosis 697 not Compact PLUS	Diagnostic information SCB All values in hexadecimal display. Displayed numbers have an overflow at FF. The meaning of individual indices depends on the selected SCB protocol (P682) Indices: i001: Number of error-free telegrams i002: Number of error-free telegrams i003: USS: Number of Byte Frame errors SCI module: Number of voltage drops of the slaves i004: USS: Number of overrun errors SCI module: Number of fiber optic link interrupts 005: USS: Parity error SCI module: Number of missing answer telegrams i006: USS: STX-error SCI module: Number of search telegrams to accept a slave i007: ETX-error i008: USS: Block check-error SC module: Number of configuration telegrams i009: USS/Peer to Peer: incorrect telegram length SCI modules: required maximum number of terminals according to process data wiring (P 554 to P631) i010: USS: Timeout SCI modules: highest maximum number of analog inputs/outputs as per process data wiring of the setpoint channel and actual-value output via SCI (P664) . i011: Reserve i012: Reserve i013: SCB-DPR alarm word i014: Information whether slave No. 1 is needed and if yes, which type 0: no slave neededt 1: SCI1 2: SCI2 i015: Information if slave No. 2 is needed and if yes, which type 0: no slave needed 1: SCI1 2: SCI2 i016: SCI modules: initialization error i017: SCB generation of year i018: SCB generation of day and month i019: SCI Slave1 SW version i020: SCI Slave1 generation of year i021: SCI Slave1 generation of day and month i022: SCI Slave2 SW version i023: SCI Slave2 generation of year i024: SCI Slave2 generation of day and month	Dec.Plc.: 0 Unit: - Indices: 24 Type: L2	Menus: - Parameter menu + Communication + SCB/SCI - Upread/free access

Parameter	Description	Data	Read/write
P698* Src SCI DigOut 698 not Compact PLUS	BICO parameter for selecting the binectors which are to be displayed via the digital outputs of the SCI boards. Meaning of the indices: i001: Select binector for SCI slave1 binary output1 i002: Select binector for SCI slave1 binary output2 i003: Select binector for SCI slave1 binary output3 i004: Select binector for SCI slave1 binary output4 i005: Select binector for SCI slave1 binary output5 i006: Select binector for SCI slave1 binector output6 i007: Select binector for SCI slave1 binary output7 i008: Select binector for SCI slave1 binary output 8 i009: Select binector for SCI slave1 binary output9 i0010: Select binector for SCI slave1 binary output10 i0011: Select binector for SCI slave1 binary output11 i0012: Select binector for SCI slave1 binary output12 i0013: Select binector for SCI slave2 binary output1 i0014: Select binector for SCI slave2 binary output2 i0015: Select binector for SCI slave2 binary output3 i0016: Select binector for SCI slave2 binary output4 i0017: Select binector for SCI slave2 binary output5 i0018: Select binector for SCI slave 2 binary output6 i0019: Select binector for SCI slave2 binary output7 i0020: Select binector for SCI slave2 binary outpu 8 i0021: Select binector for SC slave2 binary output9 i0022: Select binector for SCI slave2 binary output10 i0023: Select binector for SCI slave2 binary output11 i0024: Select binector for SCI slave2 binary output12	index1: 0 Unit: - Indices: 24 Type: L2 ,B	Menus: - Parameter menu + Communication + SCB/SCI - Upread/free access Changeable in: - Drive setting - Ready

Parameter	Description	Data	Read/write
r699 SCB/SCI Values 699 not Compact PLUS	Display parameter process data SCB All values in hexadecimal display The meaning of the individual indices depends on the selected SCB protocol (P696) Meaning for USS protocol and peer-to-peer: i001: Process data transmit word1 i002: Process data transmit word2 i003: Process data transmit word3 i004: Process data transmit word4 i005: Process data transmit word5 i006: Process data transmit word6 i007: Process data transmit word7 i008: Process data transmit word8 i009: Process data transmit word9 i0010: Process data transmit word10 i0011: Process data transmit word11 i0012: Process data transmit word12 i0013: Process data transmit word13 i0014: Process data transmit word14 i0015: Process data transmit word15 i0016: Process data transmit word16 i0017: Process data receive word1 i0018: Process data receive wordt2 i0019: Process data receive wordt3 i0020: Process data receive word4 i0021: Process data receive word5 i0022: Process data receive word6 i0023: Process data receive word7 i0024: Process data receive word8 i0025: Process data receive word9 i0026: Process data receive word10 i0027: Process data receive word11 i0028: Process data receive word12 i0029: Process data receive word13 i0030: Process data receive word14 i0031: Process data receive word15 i0032: Process data receive word16 Meaning for SCI modules: i001: SCI Slave1 digital inputs i002: SCI Slave1 analog input1 i003: SCI Slave1 analog input2 i004: SCI Slave1 analog input3 i005: SCI Slave2 digital outputs i006: SCI Slave2 analog input1 i007: SCI Slave2 analog input2 i008: SCI Slave2 analog input3 i009: SCI Slave1 digital outputs i0010: SCI Slave1 analog output1 i0011: SCI Slave1 analog output2 i0012: SCI Slave1 analog output3 i0013: SCI Slave2 digital outputs i0014: SCI Slave2 analog output1 i0015: SCI Slave2 analog output2 i0016: SCI Slave2 analog output3	Dec.Plc.: 0 Unit: - Indices: 32 Type: L2	Menus: - Parameter menu + Communication + SCB/SCI - Upread/free access
P700* SCom BusAddr 700	Bus address of the serial interfaces (see section "Serial interfaces" in operating instructions, Part 2) Indices: i001 = SCom1: bus address of the ser. interface 1(CU) i002 = SCom2: bus address of the ser. interface 2 (CU), i003 = SCB: bus address of the SCB, if P696 = 1, 2 In the case of a factory setting via SCom1, SCom2 or SCB2, this parameter is not reset.	index1: 0 Min: 0 Max: 31 Unit: - Indices: 3 Type: O2	Menus: - Parameter menu + Communication + SCom1/SCom2 + SCB/SCI - Quick parameterization - Drive setting - Upread/free access Changeable in: - Drive setting - Drive setting - Ready

Parameter	Description	Data	Read/write
P701* SCom Baud 701	Function parameter for entering the baud rates for the serial interfaces with USS protocol Index 1: serial interface 1 (Scom/SCom1) Index 2: serial interface 2 (SCom2) Index 3: SCB 1 = 300 Baud 2 = 600 Baud 3 = 1200 Baud 4 = 2400 Baud 5 = 4800 Baud 6 = 9600 Baud 7 = 19200 Baud 8 = 38400 Baud 9 = 57600 Baud only SCB 1/2 10 = 76800 Baud only SCB 1/2 11 = 93750 Baud only SCB 1/2 12 = 115200 Baud only SCB 1/2 13 = 187500 Baud only SCB 2 The settings in indices 2 and 3 have no significance for units of the Compact PLUS type. In the case of a factory setting via SCom1, SCom2 or SCB2, this parameter is not reset.	index1: 6 Min: 0 Max: 13 Unit: - Indices: 3 Type: O2	Menus: - Parameter menu + Communication + SCom1/SCom2 + SCB/SCI - Drive setting - Upread/free access Changeable in: - Drive setting - Drive setting - Ready
P702* SCom PKW # 702	Function parameter for entering the number of PKWs for the serial interfaces with USS protocol. The number of PKWs defines the number of words in the telegram which are to be used for transmitting parameter values. Index 1: Serial interface 1 (SCom(/SCom1) Index 2: Serial interface 2 (SCom2) Index 3: SCB 0 = No transmission of parameters 3 = 3 words for PKE, index and PWE 4 = 4 words for PKE, index, PWE1 and PWE2 127 = Variable length for transmitting parameter descriptions, texts and values of indicated parameters with one request. The settings in indices 2 and 3 have no significance for Compact PLUS units. In the case of a factory setting via SCom1, SCom2 or SCB2, this parameter is not reset.	index1: 127 Min: 0 Max: 127 Unit: - Indices: 3 Type: O2	Menus: - Parameter menu + Communication + SCom1/SCom2 + SCB/SCI - Upread/free access Changeable in: - Drive setting - Ready
P703* SCom PcD # 703	Function parameter for entering the number of PcDs for the serial interfaces with USS protocol. The number of PcDs defines the number of words in the telegram which are to be used for transmitting control words and setpoints or status words and actual values. Index 1: Serial interface 1 (SCom(/SCom1) Index 2: Serial interface 2 (SCom2) Index 3: SCB The settings in indices 2 and 3 have no significance for Compact PLUS units. In the case of a factory setting via SCom1, SCom2 or SCB2, this parameter is not reset.	index1: 2 Min: 0 Max: 16 Unit: - Indices: 3 Type: O2	Menus: - Parameter menu + Communication + SCom1/SCom2 + SCB/SCI - Upread/free access Changeable in: - Drive setting - Ready

Parameter	Description	Data	Read/write
P704* SCom TlgOFF 704	Function parameter for entering the telegram failure time for the serial interfaces with USS protocol.The telegram failure time defines the time within which a valid telegram has to be received. If no valid telegram is received within the specified time, the unit trips a fault. With the help of P781, tripping of the fault can be delayed and the drive shut down if necessary. If a parameter value of 0 is entered, there is no monitoring. This setting is to be selected for non-cyclical telegram transmission (e.g. for OP1S). Index 1: Serial interface 1 (SCom(/SCom1) Index 2: Serial interface 2 (SCom2) Index 3: SCB The settings in indices 2 and 3 have no significance for Compact PLUS units. In the case of a factory setting via SCom1, SCom2 or SCB2, this parameter is not reset.	index1: 0 Min: 0 Max: 6500 Unit: ms Indices: 3 Type: O2	Menus: - Parameter menu + Communication + SCom1/SCom2 + SCB/SCI - Upread/free access Changeable in: - Drive setting - Ready
P705* SCB Peer2PeerExt 705 not Compact PLUS	Direct transfer of peer-to-peer receive data of the SCB Identification of the words of the received peer-to-peer telegram which are to be transferred directly. Parameter values: 0: no direct transfer (only to CU) 1: direct transfer (and transfer to CU) Indices: i001 = Word1 in PZD part of the telegram i002 = Word2 in PZ part of the telegram ... i005 = Word5 in PZD part of the telegram. Precondition: P696 = 3 (Peer-to-Peer protocol)	index1: 0 Min: 0 Max: 1 Unit: - Indices: 5 Type: O2	Menus: - Parameter menu + Communication + SCB/SCI - Upread/free access Changeable in: - Drive setting - Ready
P706* Src SCB TrnsData 706 not Compact PLUS	BICO parameter for selecting the connectors which are to be transmitted from the serial interface on the SCB. In addition to the connectors themselves, their place in the transmit telegram will also be defined. Index 1: Word 1 in PZD part of the telegram Index 2: Word 2 in PZD part of the telegram ... Index 16: Word 16 in PZD part of the telegram The word 1 should be assigned with the status word 1 (K0032). With double-word connectors, the relevant connector number must be entered at 2 consecutive indices, as otherwise only the higher-value word will be transferred. The number of the words transferred in the PZD part of the telegram is set in P703, Index i003. IMPORTANT: With P696 = 3 (Peer-to- peer protocol) a maximum of 5 words can be transferred (i001 to i005).	index1: 0 Unit: - Indices: 16 Type: L2 ,K	Menus: - Parameter menu + Communication + SCB/SCI - Upread/free access Changeable in: - Drive setting - Ready
P707* SrcSCom1TrnsData 707	BICO parameter for selecting the connectors which are to be transmitted by serial interface 1 (SCom1). In addition to the connectors themselves, their place in the telegram is also defined. Index 1: Word 1 in the PZD part of the telegram Index 2: Word 2 in the PZD part of the telegram ... Index 16: Word 16 in the PZD part of the telegram Word 1 should be assigned status word 1 (K0032). With double-word connectors, the associated connector number must be entered in 2 successive indices because, otherwise, only the higher-value word is transmitted. The number of words transmitted in the PZD part of the telegram is set in P703, Index i001.	index1: 32 Unit: - Indices: 16 Type: L2 ,K	Menus: - Parameter menu + Communication + SCom1/SCom2 - Upread/free access Changeable in: - Drive setting - Ready

Parameter	Description	Data	Read/write
P708* SrcSCom2TrnsData 708 not Compact PLUS	BICO parameter for selecting the connectors which are to be sent from the serial interface 2 (SCom2). Not only the connectors themselves but also their place in the transmit telegram are defined. Index 1: Word 1 in PZD part of telegram Index 2: Word 2 in PZD part of telegram ... Index 16: Word 16 in PZD part of telegram Word 1 should be assigned with status word 1 (K0032) . In the case of double word connectors, the relevant connector number must be entered at 2 consecutive indices, otherwise only the higher-value word will be transferred. The number of the words transferred in the PZD part of the telegram is set in P703, Index i002.	index1: 0 Unit: - Indices: 16 Type: L2 ,K	Menus: - Parameter menu + Communication + SCom1/SCom2 - Upread/free access Changeable in: - Drive setting - Ready
r709 SCom1/2 RecvData 709 not Compact PLUS	Display of the process data received via the interface SCom1 or SCom2. Index 1 - 16 : SCom1 process data Index 17 - 32: SCom2 process data	Dec.Plc.: 0 Unit: - Indices: 32 Type: L2	Menus: - Parameter menu + Communication + SCom1/SCom2 - Upread/free access
r709 SCom1 RecvData 709 Compact PLUS only	Display of the process data received via interface SCom1 Index 1 - 16 : SCom1 process data	Dec.Plc.: 0 Unit: - Indices: 16 Type: L2	Menus: - Parameter menu + Communication + SCom1/SCom2 - Upread/free access
r710 SCom1/2 TrnsData 710 not Compact PLUS	Display of the process data transmitted via the interface SCom1 or SCom2. Index 1 - 16 : SCom1 process data Index 17 - 32: SCom2 process data	Dec.Plc.: 0 Unit: - Indices: 32 Type: L2	Menus: - Parameter menu + Communication + SCom1/SCom2 - Upread/free access
r710 SCom1 TrnsData 710 Compact PLUS only	Display of the process data transmitted via interface SCom1	Dec.Plc.: 0 Unit: - Indices: 16 Type: L2	Menus: - Parameter menu + Communication + SCom1/SCom2 - Upread/free access
P711* CB Parameter 1 711	Function parameter for entering the CB-specific parameter. The parameter is only relevant if there is a communication board (CBx). Its significance depends on the type of Cbx built in. If a set parameter value is outside the value range accepted by the built-in Cbx, the unit trips a fault. Index 1: 1st CB Index 2: 2nd CB In the case of a factory setting via 1st CB or 2nd CB, this parameter is not reset.	index1: 0 Min: 0 Max: 65535 Unit: - Indices: 2 Type: O2	Menus: - Parameter menu + Communication + Field bus interfaces - Board configuration - Drive setting - Upread/free access Changeable in: - Board configuration - Drive setting
P712* CB Parameter 2 712	See P711 for description	index1: 0 Min: 0 Max: 65535 Unit: - Indices: 2 Type: O2	Menus: - Parameter menu + Communication + Field bus interfaces - Board configuration - Drive setting - Upread/free access Changeable in: - Board configuration - Drive setting

Parameter	Description	Data	Read/write
P713* CB Parameter 3 713	See P711 for description	index1: 0 Min: 0 Max: 65535 Unit: - Indices: 2 Type: O2	Menus: - Parameter menu + Communication + Field bus interfaces - Board configuration - Drive setting - Upread/free access Changeable in: - Board configuration - Drive setting
P714* CB Parameter 4 714	See P711 for description	index1: 0 Min: 0 Max: 65535 Unit: - Indices: 2 Type: O2	Menus: - Parameter menu + Communication + Field bus interfaces - Board configuration - Drive setting - Upread/free access Changeable in: - Board configuration - Drive setting
P715* CB Parameter 5 715	See P711 for description	index1: 0 Min: 0 Max: 65535 Unit: - Indices: 2 Type: O2	Menus: - Parameter menu + Communication + Field bus interfaces - Board configuration - Drive setting - Upread/free access Changeable in: - Board configuration - Drive setting
P716* CB Parameter 6 716	See P711 for description	index1: 0 Min: 0 Max: 65535 Unit: - Indices: 2 Type: O2	Menus: - Parameter menu + Communication + Field bus interfaces - Board configuration - Drive setting - Upread/free access Changeable in: - Board configuration - Drive setting
P717* CB Parameter 7 717	See P711 for description	index1: 0 Min: 0 Max: 65535 Unit: - Indices: 2 Type: O2	Menus: - Parameter menu + Communication + Field bus interfaces - Board configuration - Drive setting - Upread/free access Changeable in: - Board configuration - Drive setting
P718* CB Parameter 8 718	See P711 for description	index1: 0 Min: 0 Max: 65535 Unit: - Indices: 2 Type: O2	Menus: - Parameter menu + Communication + Field bus interfaces - Board configuration - Drive setting - Upread/free access Changeable in: - Board configuration - Drive setting

Parameter	Description	Data	Read/write
P719* CB Parameter 9 719	See P711 for description	index1: 0 Min: 0 Max: 65535 Unit: - Indices: 2 Type: O2	Menus: - Parameter menu + Communication + Field bus interfaces - Board configuration - Drive setting - Upread/free access Changeable in: - Board configuration - Drive setting
P720* CB Parameter 10 720	See P711 for description	index1: 0 Min: 0 Max: 65535 Unit: - Indices: 2 Type: O2	Menus: - Parameter menu + Communication + Field bus interfaces - Board configuration - Drive setting - Upread/free access Changeable in: - Board configuration - Drive setting
P721* CB Parameter 11 721	Function parameter for entering the 11th CB-specific parameter. The parameter is only relevant if there is a communication board (CBx). Its meaning depends on the type of Cbx built in. If a set parameter value is outside the value range accepted by the built-in Cbx, the unit trips a fault. Index 1-5: 1st CB Index 6-10: 2nd CB In the case of a factory setting via 1st CB or 2nd CB, this parameter is not reset.	index1: 0 Min: 0 Max: 65535 Unit: - Indices: 10 Type: O2	Menus: - Parameter menu + Communication + Field bus interfaces - Board configuration - Drive setting - Upread/free access Changeable in: - Board configuration - Drive setting
P722* CB/TB TlgOFF 722	Function parameter for entering the telegram failure time for a built-in communication board (CBx) or technology board (TB). The telegram failure time defines the time within which a valid telegram has to be received. If no valid telegram is recieved the unit trips a fault. With the help of P781, fault tripping can be delayed and the drive shut down if necessary. If a parameter value of 0 is entered, there is no monitoring. In the case of a factory setting via 1st CB or 2nd CB, this parameter is not reset.	index1: 10 Min: 0 Max: 6500 Unit: ms Indices: 2 Type: O2	Menus: - Parameter menu + Communication + Field bus interfaces - Upread/free access Changeable in: - Drive setting - Ready
P723 CBP2_CycleÜW 723	Activates cycle monitoring with clocked Profibus. Function: If a clocked telegram is received outside the bus cycle time grid, the telegram is ignored. 0 Cycle monitoring deactivated 1 Cycle monitoring activated	Init: 0 Min: 0 Max: 1 Unit: - Indices: - Type: O2	Menus: - Parameter menu + Communication + Field bus interfaces - Upread/free access Changeable in: - Drive setting
P724* Select CB synch 724	Selection of the CB board (1st or 2nd) which is synchonized to reading basic unit setpoints (only one board can be synchronized in this way). 0 = 1st CB 1 = 2nd CB Important: Modifcation is required for special applications only (customer-specific CBC)	Init: Min: 0 Max: 1 Unit: - Indices: - Type: O2	Menus: - Parameter menu - Upread/free access Changeable in: - Drive setting
r732 CB Diagnosis 732	Visualization parameter for displaying diagnostic information for a built-in communication board (CBx) or technology board (TB). The meaning of the displayed values is specific to each particular board.	Dec.Plc.: 0 Unit: - Indices: 64 Type: L2	Menus: - Parameter menu + Communication + Field bus interfaces - Upread/free access

Parameter	Description	Data	Read/write
r733 CB/TB RecvData 733	Visualization parameter for displaying control words and setpoints (process data) which are received by a communication board (CBx) or a technology board (TB) and passed on to the basic unit.	Dec.Plc.: 0 Unit: - Indices: 32 Type: L2	Menus: - Parameter menu + Communication + Field bus interfaces - Upread/free access
P734* SrcCB/TBTrnsData 734	BICO parameter for selecting connectors which are to be transmitted by a communication board (CBx) or a technology board (TB). In addition to the connectors themselves, their place in the transmitted telegram is also defined. Index 1: Word 1 in the PZD part of the telegram Index 2: Word 2 in the PZD part of the telegram ... Index 16: Word 16 in the PZD part of the telegram Word 1 should be assigned status word 1 (K0032). For double-word connectors, the associated connector number must be entered in two successive indices because, otherwise, only the higher-value word is transmitted.	index1: 32 Unit: - Indices: 16 Type: L2 ,K	Menus: - Parameter menu + Communication + Field bus interfaces - Upread/free access Changeable in: - Drive setting - Ready
r735 CB/TB TrnsData 735	Display of the process data sent to the TB or the CB in hexadecimal form Index 1 .. 16 : Transmit data for TB/CB Index 17 .. 32: Transmit data for 2nd CB	Dec.Plc.: 0 Unit: - Indices: 32 Type: L2	Menus: - Parameter menu + Communication + Field bus interfaces - Upread/free access
P736* Src CB2 TrnsData 736	BICO parameter for selecting the connectors which are to be transmitted by the 2nd communication board (2nd CBX). Both the connectors themselves and their position in the transmit telegram are defined. Index 1: Word 1 in PcD part of telegram Index 2: Word 2 in PcD part of telegram ... Index 16: Word 16 in PcD part of telegram Word 1 should be assigned with status word 1 (K0032). In the case of double word connectors the relevant connector number must be entered at 2 consecutive indices, otherwise only the higher-value word is transferred.	index1: 32 Unit: - Indices: 16 Type: L2 ,K	Menus: - Parameter menu + Communication + Field bus interfaces - Upread/free access Changeable in: - Drive setting - Ready
r738 PKW Order 738	Visualization parameter for displaying the parameter task (PKW) which is received by a communication board (CBx) or a technology board (TB) and passed on to the basic unit. Index 1: Task code and parameter number Index 2: Parameter index Index 3: 1st parameter value Index 4: 2nd parameter value Index 1 to 4: SCom1 Index 5 to 8: 1st CB Index 9 to 12: SCB Index 13 to 16: SCom2 Index 17 to 20: 2nd CB All values are shown as hexadecimals.	Dec.Plc.: 0 Unit: - Indices: 20 Type: L2	Menus: - Parameter menu + Communication + SCom1/SCom2 + Field bus interfaces + SCB/SCI - Upread/free access

Parameter	Description	Data	Read/write
r739 PKW Reply 739	Visualization parameter for displaying the parameter reply (PKW) which is passed on from the basic unit to a communication board (CBx) or a technology board (TB) and, from there, is transmitted to the communication partner. Index 1: Task number and parameter number Index 2: Parameter index Index 3: 1st parameter value Index 4: 2nd parameter value Index 1 to 4: SCom1 Index 5 to 8: 1st CB Index 9 to 12: SCB Index 13 to 16: SCom2 Index 17 to 20: 2nd CB All values are shown as hexadecimals.	Dec.Plc.: 0 Unit: - Indices: 20 Type: L2	Menus: - Parameter menu + Communication + SCom1/SCom2 + Field bus interfaces + SCB/SCI - Upread/free access
P740* SLB NodeAddr 740	Function parameter for entering the node address for a built-in SIMOLINK board (SLB). The node address defines the telegrams to which the relevant unit is allowed writing access. Reading access is set in P749. The node address also defines whether a node also acts as the dispatcher. 0 = Dispatcher (generates telegram circulation) Not equal to 0 = Transceiver In the SIMOLINK ring, only one node is allowed to perform the dispatcher function. It is not permitted to allocate node address 0 if a higher-level automation unit (automation master) performs the dispatcher function.	index1: 1 Min: 0 Max: 200 Unit: - Indices: 2 Type: O2	Menus: - Parameter menu + SIMOLINK - Quick parameterization - Board configuration - Upread/free access Changeable in: - Board configuration - Drive setting
P741* SLB TlgOFF 741	Function parameter for entering the telegram failure time for a built-in SIMOLINK board (SLB). The telegram failure time defines the time within which a valid synchronizing telegram must be received. If no valid synchronizing telegram is received within the specified time, the unit trips a fault. With the help of P781, tripping of the fault can be delayed and the drive can be shut down if necessary.	Init: 0 Min: 0 Max: 6500 Unit: ms Indices: - Type: O2	Menus: - Parameter menu + SIMOLINK - Board configuration - Upread/free access Changeable in: - Board configuration - Drive setting
P742* SLB Trns Power 742	Function parameter for setting the transmission power for a built-in SIMOLINK board (SLB). Operation with reduced transmission power increases the life of the transmitter and receiver components. 1 = 0 m to 15 m cable length 2 = 15 m to 25 m cable length 3 = 25 m to 40 m cable length	Init: 3 Min: 1 Max: 3 Unit: - Indices: - Type: O2	Menus: - Parameter menu + SIMOLINK - Board configuration - Upread/free access Changeable in: - Board configuration - Drive setting
P743 SLB # Nodes 743	Function parameter for entering the number of nodes in the SIMOLINK ring. The entered value enables a built-in SIMOLINK board (SLB) to determine its position in the ring and to compensate for the bus transfer time. The total of all nodes (e.g. SLBs etc.) in the SIMOLINK ring is to be entered.	index1: 0 Min: 0 Max: 255 Unit: - Indices: 2 Type: O2	Menus: - Parameter menu + SIMOLINK - Board configuration - Upread/free access Changeable in: - Board configuration - Drive setting

Parameter	Description	Data	Read/write
P744* Src SYNC Sel 744	Function parameter for selecting the module that supplies the SYNC pulse. i02 | i01 0 0 = SLB in lower slot 0 1 = SLB in higher slot 1 0 = CBP2 in lower slot 1 1 = CBP2 in higher slot The slots in rising order are as follows: A, B, C, D, E, F, G.	index1: 0 Unit: - Indices: 2 Type: L2 ,B	Menus: - Parameter menu + SIMOLINK - Upread/free access Changeable in: - Drive setting
P745* SLB Channel # 745	Function parameter for entering the channels which the dispatcher is to provide to each transceiver. The number of channels together with P746 determines the number of nodes which can be addressed. This parameter is only relevant for the dispatcher (P740=0).	index1: 2 Min: 1 Max: 8 Unit: - Indices: 2 Type: O2	Menus: - Parameter menu + SIMOLINK - Board configuration - Upread/free access Changeable in: - Board configuration - Drive setting
P746* SLB Cycle Time 746	Function parameter for entering the cycle time for SIMOLINK. The cycle time is the time which is needed for complete circulation of all telegrams in the SIMOLINK ring. It also determines the time reference in which the transceivers receive synchronizing telegrams. For synchronization of the transceivers to take place, the cycle time must amount to several times that of time slot T2 of the transceivers. The length of time slot T2 (T2 = 4/P340) is defined by the pulse frequency (P340). Together with P745, the time cycle determines the number of addressable nodes. The parameter is only relevant for the dispatcher (P740=0).	index1: 3,20 Min: 0,20 Max: 6,50 Unit: ms Indices: 2 Type: O2	Menus: - Parameter menu + SIMOLINK - Board configuration - Upread/free access Changeable in: - Board configuration - Drive setting
P747* SrcSLBAppl.Flags 747	BICO parameter for selecting the binectors which are to be sent as application flags by the SIMOLINK board (SLB). In addition to the binectors themselves, their place in the application part of the trasnsmitted telegram is defined. Index 1: 1st binector Index 2: 2nd binector Index 3: 3rd binector Index 4: 4th binector	index1: 0 Unit: - Indices: 4 Type: L2 ,B	Menus: - Parameter menu + SIMOLINK - Upread/free access Changeable in: - Drive setting
r748 SLB Diagnosis 748	Visualization parameter for displaying the diagnostic information for a built-in SIMOLINK board (SLB). Index 1: Number of error-free synchronizing telegrams Index 2: Number of CRC errors Index 3: Number of time-out errors Index 4: Last address actuated Index 5: Address of the node which transmits the special telegram, "Time out". Index 6: Active SYNC interrupt delay 1 = 273 ns Index 7: Position of the node in the ring Index 8: Number of nodes in the ring Index 9: Synchronism deviation (65535 synchronization not active) should fluctuate between 65515 and 20 Index 10: Corrected pulse period in units of 100 ns (65535 synchronization not active) Index 11: T0 counter (0 with active synchronization) Index 12: internal Index 13: internal Index 14: Time counter (0 with active synchronization) Index 15: implemented bus cycle time Index 16: internal Index 17: internal In function diagram 140.7	Dec.Plc.: 0 Unit: - Indices: 17 Type: O2	Menus: - Parameter menu + SIMOLINK - Upread/free access

Parameter	Description	Data	Read/write
P749* SLB Read Addr 749	Function parameter for entering the node addresses and channels from which a built-in SIMOLINK board (SLB) is to read out data. The places before the comma in the input value define the node address and the places after the comma define the channel. Example: 2.0 = node address 2, Channel 0 Writing access is set in P740.	index1: 0,0 Min: 0,0 Max: 200,7 Unit: - Indices: 8 Type: O2	Menus: - Parameter menu + SIMOLINK - Board configuration - Upread/free access Changeable in: - Board configuration - Drive setting
r750 SLB Rcv Data 750	Visualization parameter for the data received via SIMOLINK.	Dec.Plc.: 0 Unit: - Indices: 16 Type: L2	Menus: - Parameter menu + SIMOLINK - Upread/free access
P751* SrcSLBTrnsData 751	BICO parameter for selecting the connectors which are to be transmitted by a SIMOLINK board (SLB). In addition to the connectors themselves, their place in the transmitted telegram is also defined. Index 1: Channel 1, low-word Index 2: Channel 1, high-word Index 3: Channel 2, low-word Index 4: Channel 2, high-word ... Index 15: Channel 8, low-word Index 16: Channel 8, high-word For double-word connectors, the relevant connector number must be entered in 2 successive indices because, otherwise, only the higher-value word is transmitted.	index1: 0 Unit: - Indices: 16 Type: L2 ,K	Menus: - Parameter menu + SIMOLINK - Upread/free access Changeable in: - Drive setting - Ready
r752 SLB TrnsData 752	Process data transmitted via SIMOLINK in hexadecimal display	Dec.Plc.: 0 Unit: - Indices: 16 Type: L2	Menus: - Parameter menu + SIMOLINK - Upread/free access
P753* SrcSyncTimeCount 753	Input for snychronizing counter. This enables time slots to be synchronized above the bus cycle time.	Init: 0 Unit: - Indices: - Type: L2 ,K	Menus: - Parameter menu + SIMOLINK - Upread/free access Changeable in: - Drive setting
P754* Max SyncTimeSlot 754	Maximum time slot which is to be synchronized. 0: Synchronized time slot coresponds to bus cycle time.	Init: 0 Min: 0 Max: 10 Unit: - Indices: - Type: O2	Menus: - Parameter menu + SIMOLINK - Upread/free access Changeable in: - Drive setting
P755* SIMOLINK Conf 755	Function parameter for configuring various properties of SIMOLINK transfer. xxx0 No deadtime compensation xxx1: Compensation of the different deadtimes between transceiver-transceiver and transceiver-dispatcher-transceiver. xx0x: Switchover between 2 SLBs in operation disabled xx1x: Switchover between 2 SLBs in operation enabled x0xx: Bus cycle time is internally corrected to whole telegram number x1xx: Bus cycle time is implemented precisely	Init: 0 Unit: - Indices: - Type: L2	Menus: - Parameter menu + SIMOLINK - Upread/free access Changeable in: - Board configuration - Drive setting

Parameter	Description	Data	Read/write
P756* SrSLB_Specialdat 756	BICO parameter for selecting the parameters that are to be sent from a SIMOLINK board (SLB) as special data. Special data can be sent from an SLB master or dispatcher only. Index 1: Special telegram 1, low-word Index 2: Special telegram 1, high-word Index 3: Special telegram 2, low-word ... Index 7: Special telegram 4, low-word Index 8: Special telegram 4, high-word In the case of double word connectors the relevant connector number must be entered at 2 successive indices as otherwise only the higher-value word will be transmitted.	index1: 0 Unit: - Indices: 8 Type: L2 ,K	Menus: - Parameter menu + SIMOLINK - Upread/free access Changeable in: - Drive setting - Ready
P770* PosRegIntpRatio 770	The time slot interpolation generates a fine ramp for the position controller from the rough jump of the position setpoint. For this, the transmission ratio of the time slots of the position controller or position sensing and the position setpoint setting have to be specified. The transmission ratio is specified in grading 2^n. Example: Sampling time of position setpoint generation T5 Sampling time of position controller T3 Transmission ratio = 2 (2^2=4)	Init: 1 Min: -8 Max: 8 Unit: - Indices: - Type: I2	Menus: - Parameter menu + Control/gating unit + Position control - Upread/free access Changeable in: - Drive setting - Ready
P771* PosRegIntpDmax 771	The time slot interpolation only operates efficiently if the setpoint is changed in the context of technological setpoint setting. A setpoint jump such as occurs upon reset of the position setpoint after axis overflow of synchronous operation, should not be interpolated. The parameter defines the limit of interpolation: If the setpoint change since the last sampling cycle is below this limit, interpolation is carried out; if the setpoint change exceeds this limit, the position setpoint is adopted immediately, and no interpolation is carried out. If a parameter value of zero is entered, the maximum jump height is calculated automatically.	Init: 1024 Min: 0 Max: 2147483647 Unit: - Indices: - Type: O4	Menus: - Parameter menu + Control/gating unit + Position control - Upread/free access Changeable in: - Drive setting - Ready
P772* SrcEnRGenByp 772		Init: 1 Unit: - Indices: - Type: L2 ,B	Menus: - Parameter menu - Upread/free access Changeable in: - Drive setting
P773* Diff.TimePre 773	Differential time constant for torque pre-control of the position controller. The integral-action time of the speed control path has to be entered as the differential time, i.e. the time which the drive needs to run up from zero to rated speed (100%) at rated torque (100%).	Init: 0,000 Min: 0,000 Max: 100,000 Unit: s Indices: - Type: O4	Menus: - Parameter menu + Control/gating unit + Position control - Upread/free access Changeable in: - Drive setting - Ready
P775* PosFixV 775	With this parameter position fixed values in [LU] can be specified for the position control and sensing.	index1: 0 Min: -2147483647 Max: 2147483647 Unit: - Indices: 4 Type: I4	Menus: - Parameter menu + Control/gating unit + Position control - Upread/free access Changeable in: - Drive setting - Ready

Parameter	Description	Data	Read/write
P776* FixedSetpoints % 776	This parameter can be used to input % fixed setpoints for position, speed and torque control without overloading the processor link. (Only for advanced users familiar with the internal structure.)	index1: 0,000 Min: -200,000 Max: 199,990 Unit: % Indices: 4 Type: I4	Menus: - Parameter menu - Upread/free access Changeable in: - Drive setting - Ready
P777* Q.DiagnosticVals 777		index1: 0 Unit: - Indices: 2 Type: L2 ,K ,K	Menus: - Parameter menu - Upread/free access Changeable in: - Drive setting - Ready
P778* Gain Diag 778	Gain factor for the diagnostics values. The effective gain is 2^P778.	index1: 0 Min: 0 Max: 31 Unit: - Indices: 2 Type: O2	Menus: - Parameter menu + Control/gating unit + Position control - Upread/free access Changeable in: - Drive setting - Ready
P781* Fault Delay 781	Function parameter for setting a delay time for various faults. Special case: Value 101.0 means that the fault is never triggered. Index 1: Ext. fault 1 Index 2: Ext. fault 2 Index 4: Index 5: Index 6: Index 7: Index 8: Index 9: Index 10: Index 11: SCom1 telegram failure Index 12: SCom2 telegram failure Index 13: CB/TB telegram failure Index 14: 2nd CB telegram failure Index 15: SCB telegram failure Index 16: SLB telegram failure Index 17: Index 18: Index 19: Index 20:	index1: 0,0 Min: 0,0 Max: 101,0 Unit: s Indices: 20 Type: O2	Menus: - Parameter menu + Diagnostics + Faults/warnings - Upread/free access Changeable in: - Drive setting - Ready
r782 Trip Time 782	Visualization parameter for displaying the times at which the last 8 faults occurred. The current status of the operating-hours counter (r825) is displayed. Index 1: Day of the 1st (last) fault trip Index 2: Hour of the 1st fault trip Index 3: Second of the 1st fault trip Indices 4 to 6: 2nd fault trip Indices 7 to 9: 3rd fault trip Indices 10 to 12: 4th fault trip Indices 13 to 15: 5th fault trip Indices 16 to 18: 6th fault trip Indices 19 to 21: 7th fault trip Indices 22 to 24: 8th (oldest) fault trip Further details for describing the fault trips are contained in r947, r949, P952. The fault memory is deleted with the help of P952.	Dec.Plc.: 0 Unit: - Indices: 24 Type: O2	Menus: - Parameter menu + Diagnostics + Faults/warnings - Upread/free access

Parameter	Description	Data	Read/write
P788 V DCLink(Thresh) 788	Function parameter for entering the comparison value for the DC link voltage. If the DC link voltage drops due to voltage dips in the power system, the drive can still be brought to a guided standstill if the voltage falls below the set threshold. A turn-off due to undervoltage is prevented.	Init: 800 Min: 0 Max: 1000 Unit: V Indices: - Type: O2	Menus: - Parameter menu + Diagnostics + Faults/warnings - Upread/free access Changeable in: - Drive setting - Ready
P790* Src Setp 790	BICO parameter for selecting the connector from which the setpoint is to be read in for detecting deviation of the actual value from the setpoint. A deviation is indicated in status word 1, bit 8.	Init: 150 Unit: - Indices: - Type: L2 ,K	Menus: - Parameter menu + Diagnostics + Messages/displays - Upread/free access Changeable in: - Drive setting
P791* Src ActV 791	BICO parameter for selecting the connector from which the actual value is to be read in for detecting a deviation of the actual value from the setpoint. A deviation is indicated in status word 1, bit 8.	Init: 91 Unit: - Indices: - Type: L2 ,K	Menus: - Parameter menu + Diagnostics + Messages/displays - Upread/free access Changeable in: - Drive setting
P792 Perm Deviation 792	Function parameter for entering the permissible deviation of the actual value from the setpoint. A deviation is indicated in status word 1, bit 8. In function diagram 480.3.	index1: 3,0 Min: 0,0 Max: 200,0 Unit: % Indices: 4 ,FDS Type: O2	Menus: - Parameter menu + Diagnostics + Messages/displays - Upread/free access Changeable in: - Drive setting - Ready
P793 Set/Act Hyst 793	Function parameter for entering the hysteresis which is to be taken into account during determination of the actual-value/setpoint deviation. A deviation is indicated in status word 1, bit 8.	index1: 2,0 Min: 0,0 Max: 200,0 Unit: % Indices: 4 ,FDS Type: O2	Menus: - Parameter menu + Diagnostics + Messages/displays - Upread/free access Changeable in: - Drive setting - Ready
P794 Deviation Time 794	Function parameter for entering the time by which the message indicating an actual-value/setpoint deviation is to be delayed. A deviation is indicated in status word 1, bit 8.	index1: 3,0 Min: 0,0 Max: 100,0 Unit: s Indices: 4 ,FDS Type: O2	Menus: - Parameter menu + Diagnostics + Messages/displays - Upread/free access Changeable in: - Drive setting - Ready
P795* Src Comp ActV 795	BICO parameter for selecting a connector from which the actual value for generating the message "Comparison value reached" is to be read in. If the actual value reaches the comparison value (P796), this is indicated in status word 1, bit 10.	Init: 91 Unit: - Indices: - Type: L2 ,K	Menus: - Parameter menu + Diagnostics + Messages/displays - Upread/free access Changeable in: - Drive setting
P796 Compare Value 796	Function parameter for entering the comparison value. If the actual value reaches the comparison value entered, this is indicated in status word 1, bit 10.	index1: 100,0 Min: 0,0 Max: 200,0 Unit: % Indices: 4 ,FDS Type: O2	Menus: - Parameter menu + Diagnostics + Messages/displays - Upread/free access Changeable in: - Drive setting - Ready

Parameter	Description	Data	Read/write
P797 Compare Hyst 797	Function parameter for entering the hysteresis which is to be taken into account during generation of the message "Comparison value reached". If the actual value reaches the comparison value, this is indicated in status word 1, bit 10.	index1: 3,0 Min: 0,0 Max: 200,0 Unit: % Indices: 4 ,FDS Type: O2	Menus: - Parameter menu + Diagnostics + Messages/displays - Upread/free access Changeable in: - Drive setting - Ready
P798 Compare Time 798	Function parameter for entering the time by which the message "Comparison value reached" is to be lengthened if the actual value falls below the comparison value. If the actual value reaches the comparison value, this is indicated in status word 1, bit 10.	index1: 3,0 Min: 0,0 Max: 100,0 Unit: s Indices: 4 ,FDS Type: O2	Menus: - Parameter menu + Diagnostics + Messages/displays - Upread/free access Changeable in: - Drive setting - Ready
P799* Src OFF ActV 799	BICO parameter for selecting the connector from which the actual value for generating the firing-pulse block is to be read in. If the actual value falls below the shut-down value (P800) after an OFF command, the firing pulse is blocked. Preferably, the actual speed (KK0091) is selected as the actual value.	Init: 91 Unit: - Indices: - Type: L2 ,K	Menus: - Parameter menu + Diagnostics + Messages/displays - Upread/free access Changeable in: - Drive setting
P800 OFF Value 800	Function parameter for entering the turn-off value below which the firing-pulse block is to be generated. If the actual value falls below the turn-off value after an OFF command, the firing pulses are blocked. The firing-pulse block can be delayed by the time entered in P801. In function diagram 480.3	index1: 0,5 Min: 0,0 Max: 200,0 Unit: % Indices: 4 ,FDS Type: O2	Menus: - Parameter menu + Diagnostics + Messages/displays - Upread/free access Changeable in: - Drive setting - Ready
P801 OFF Time 801	Function parameter for entering the time by which the firing-pulse block is to be delayed. If the actual value falls below the turn-off value after an OFF command, blocking of the firing pulses is delayed by the time entered. In function diagram: 480.5	index1: 0,00 Min: 0,00 Max: 100,00 Unit: s Indices: 4 ,FDS Type: O2	Menus: - Parameter menu + Diagnostics + Messages/displays - Upread/free access Changeable in: - Drive setting - Ready
P802* Src Speed Setp 802	BICO parameter for selecting the connector from which the speed setpoint is to be read in for detecting the direction of rotation. Preferably, the speed setpoint KK0150) is used. The message "Positive speed setpoint" is indicated in status word 1, bit 14.	Init: 150 Unit: - Indices: - Type: L2 ,K	Menus: - Parameter menu + Functions - Upread/free access Changeable in: - Drive setting
P803* Src Speed ActV 803	BICO parameter for selecting the connector from which the actual speed is to be read in for detecting overspeed. Preferably, the actual speed (KK0091) is used. The message "Overspeed" is indicated in status word 2, bit 18.	Init: 91 Unit: - Indices: - Type: L2 ,K	Menus: - Parameter menu + Diagnostics + Messages/displays - Upread/free access Changeable in: - Drive setting
P805 PullOut/BlckTime 805	Waiting time after "Setpoint/actual deviation" message (status word 1, bit 8) during blocking up to output of a fault message (r553 bit28). Dependent parameters: P790 (Source setpoint of the setpoint/actual deviation) P791 (Source actual value of setpoint/actual deviation) P792 (Frequency of setpoint/actual deviation), P794 (Duration of setpoint/actual deviation)	Init: 50,00 Min: 0,00 Max: 100,00 Unit: s Indices: - Type: O2	Menus: - Parameter menu + Diagnostics + Messages/displays - Upread/free access Changeable in: - Drive setting - Ready

Parameter	Description	Data	Read/write
P806 Fct BlockOverl 806	Setting the stall or blocking diagnosis n-control 0 Complete blocking diagnosis (incl. overload diagnosis at n=0) 1 Only blocking diagnosis (at n=0) 2 Function completely deselected v/f characteristic 0 Stall diagnosis selected 1 Stall diagnosis selected 2 Function deselected	Init: 0 Min: 0 Max: 2 Unit: - Indices: - Type: O2	Menus: - Parameter menu + Diagnostics + Messages/displays - Upread/free access Changeable in: - Drive setting
P807* Q.LZ.Receive.Val 807	Source for lifetime counter of the receive block. In function diagram 170	Init: 0 Unit: - Indices: - Type: L2 ,K	Menus: - Parameter menu + Free blocks - Upread/free access Changeable in: - Drive setting
P808* Q.LZ.Receive.Res 808	Source for reset of the LC receive block. In function diagram 170	Init: 0 Unit: - Indices: - Type: L2 ,B	Menus: - Parameter menu + Free blocks - Upread/free access Changeable in: - Drive setting
r809 LZ.Rec.NAPC 809	Display of the transformation ratio between generated and evaluated ready signal at the ready signal receiver module. In function diagram 170.	Dec.Plc.: 0 Unit: - Indices: - Type: O2	Menus: - Parameter menu + Free blocks - Upread/free access
r810 LZ.ReceiveStatus 810	Status of the sign-of-life receive block In function diagram 170	Dec.Plc.: 0 Unit: - Indices: - Type: L2	Menus: - Parameter menu + Free blocks - Upread/free access
P811* Q.LZRec.F152 EN 811	Allow source for output of fault F152 in the event of communication disturbance.	Init: 1 Unit: - Indices: - Type: L2 ,B	Menus: - Parameter menu + Free blocks - Upread/free access Changeable in: - Drive setting
r812 LZ.RecActFail 812	Parameter for output of the current fault value of the LC receive block: In the event of a ready signal failure, the fault value is incremented by 10. When a value ready signal is received, the fault value is decremented by 1. In function diagram 170.	Dec.Plc.: 0 Unit: - Indices: - Type: O2	Menus: - Parameter menu + Free blocks - Upread/free access
r813 LZ.Rec.AbsFail 813	Parameter for output of the LC receive block ready signal that has failed since power up. In function diagram 170.	Dec.Plc.: 0 Unit: - Indices: - Type: O2	Menus: - Parameter menu + Free blocks - Upread/free access
P814* LZ Bit Position 814	This parameter determines the bit position of the sign-of-life word. (P807, K0255, K0256) Value: 0: sign of life begins with bit 0 1: sign of life begins with bit12	Init: 0 Min: 0 Max: 1 Unit: - Indices: - Type: O2	Menus: - Parameter menu - Upread/free access Changeable in: - Drive setting
P823* Time Slot No 823	Service parameter, only for Siemens service personnel Parameter for entry of serial time slot number for the time slot wait block	Init: 0 Min: 0 Max: 1023 Unit: - Indices: - Type: O2	Menus: - Parameter menu - Upread/free access Changeable in: - Drive setting - Ready

Parameter	Description	Data	Read/write
r824 Time waited 824	Service parameter, only for Siemens service personnel Calculation time of time slot wait block.	Dec.Plc.: 2 Unit: ms Indices: - Type: O2	Menus: - Parameter menu + Diagnostics + Messages/displays - Upread/free access
r825 Operat. Hours 825	Visualization parameter for displaying the operating- hours counter. Only that time is counted during which the unit is operated with released firing pulses (inverter release). Index 1: Days Index 2: Hours Index 3: Seconds	Dec.Plc.: 0 Unit: - Indices: 3 Type: O2	Menus: - Parameter menu + Diagnostics + Messages/displays - Upread/free access
r826 PCB Code 826 not Compact PLUS	Visualization parameter for displaying the board codes. With the help of these codes the type of the built-in electronics boards can be determined. Index 1: Basic board Index 2: Optional board in slot A Index 3: Optional board in slot B Index 4: Optional board in slot C Index 5: Optional board in slot D Index 6: Optional board in slot E Index 7: Optional board in slot F Index 8: Optional board in slot G Slots D-G are not available in type Compact PLUS. Board codes: 90 to 109 = Main board or Control Unit (CUx) 110 to 119 = Sensor Board (SBx) 120 to 129 = Serial Communication Board (SCB) 130 to 139 = Technology Board 140 to 149 = Communication Board (CBx) 150 to 169 = Special boards (EBx, SLB)	Dec.Plc.: 0 Unit: - Indices: 8 Type: O2	Menus: - Parameter menu + Diagnostics + Messages/displays - Fixed settings - Quick parameterization - Board configuration - Drive setting - Download - Upread/free access - Power section definition

Parameter	Description	Data	Read/write
r826 PCB Code 826 Compact PLUS only	Visualization parameter for displaying the board codes. With the help of these codes the type of the built-in electronics boards can be determined. Index 1: Basic board Index 2: Optional board in slot A Index 3: Optional board in slot B Index 4: Optional board in slot C Board codes: 90 to 109 = Main board or Control Unit (CUx) 92 = Main board VC 93 = Main board MC compact 94 = Main board MC compact plus 106 = Main board AFE 110 to 119 = Sensor Board (SBx) 111 = SBP Sensor Board Pulse Encoder 112 = SBM Sensor Board Encoder/Multiturn 1 113 = SBM2 Sensor Board Encoder/Multiturn 2 114 = SBR1 Sensor Board Resolver 1 115 = SBR2 Sensor Board Resolver 2 120 to 129 = Serial Communication Board (SCB) 121 = SCB1 Serial Communication by optical fibre 122 = SCB2 Serial Communication by wire 130 to 139 = Technology Board 131 = T100 Technology Board 131 = T300 Technology Board 134 = T400 Technology Board 140 to 149 = Communication Board (CBx) 143 = CBP Communication Board PROFIBUS 145 = CBD Communication Board DeviceNet 146 = CBC Communication Board CAN 147 = Communication Board CC-Link 148 = CBP2 Communication Board PROFIBUS 2 150 to 169 = Special boards (EBx, SLB) 151 = EB1 Extension Board 1 152 = EB2 Extension Board 2 161 = SLB SIMOLINK-Board	Dec.Plc.: 0 Unit: - Indices: 4 Type: O2	Menus: - Parameter menu + Diagnostics + Messages/displays - Fixed settings - Quick parameterization - Board configuration - Drive setting - Download - Upread/free access - Power section definition
r827 Generat. Date 827	Visualization parameter for displaying the date on which the firmware of the basic unit was generated. Index 1: Year Index 2: Month Index 3: Day	Dec.Plc.: 0 Unit: - Indices: 3 Type: O2	Menus: - Parameter menu + Diagnostics + Messages/displays - Drive setting - Upread/free access - Power section definition
r828 SW ID 828 Compact PLUS only	Visualization parameter for displaying the software codes. With the help of these codes, the compatibility of the individual software versions can be checked. Index 1: Basic board Index 2: Optional board in slot A Index 3: Optional board in slot B Index 4: Optional board in slot C Index 5: Basic board add-on For boards without software (e.g. SBR, SLB), 0.0 is always shown in the corresponding index.	Dec.Plc.: 1 Unit: - Indices: 5 Type: O2	Menus: - Parameter menu + Diagnostics + Messages/displays - Fixed settings - Quick parameterization - Board configuration - Drive setting - Download - Upread/free access - Power section definition

Parameter	Description	Data	Read/write
r828 SW ID 828 not Compact PLUS	Visualization parameter for displaying the software codes. With the help of these codes, the compatibility of the individual software versions can be checked. Index 1: Basic board Index 2: Optional board in slot A Index 3: Optional board in slot B Index 4: Optional board in slot C Index 5: Optional board in slot D Index 6: Optional board in slot E Index 7: Optional board in slot F Index 8: Optional board in slot G Index 9: Basic board add-on For boards without software (e.g. SBR, SLB), 0.0 is always shown in the corresponding index.	Dec.Plc.: 1 Unit: - Indices: 9 Type: O2	Menus: - Parameter menu + Diagnostics + Messages/displays - Fixed settings - Quick parameterization - Board configuration - Drive setting - Download - Upread/free access - Power section definition
r829 CalcTimeHdroom 829	Visualization parameter for displaying the free calculating time. The reserve of the microprocessor system in the basic unit is shown in relation to its total calculating capacity in index 1. The free calculating time is influenced by the set pulse frequency (P340) as well as the number and processing frequency of the activated function blocks. The failed time slots from T2 to T10 are counted in Index 2 to Index 10. Index 11 displays the minimum free number of words of the DSP stack. Caution! A value of 1 means that the stack has an overflow! Index 12 to Index 19 display the remaining calculating time of the 8 DSP residual time slots. The values refer to an empirical value of an empty residual time slot.	Dec.Plc.: 0 Unit: - Indices: 19 Type: O2	Menus: - Parameter menu + Diagnostics + Messages/displays - Upread/free access
P830* Fault Mask 830	The faults entered in this parameter are suppressed. Setting note: - Despite suppression, a pulse disable occurs with some faults (UCE, overcurrent, overvoltage, etc.)	index1: 0 Min: 0 Max: 255 Unit: - Indices: 5 Type: O2	Menus: - Parameter menu - Upread/free access Changeable in: - Drive setting - Ready
r831 AssignmtCoupCh 831	Service parameter, only for Siemens service personnel The visualization parameter shows the assignments made to coupling channels C167<->DSP. The parameter value indicates the connector number. Parameter values: 0: Coupling channel free 9999: Coupling channel occuppied (by internal datum) Indices: Index=channel number Channels 01-24: Coupling to T2(= 4TO) Channels 25-32: Coupling to T3(= 8TO) Channels 33-40: Coupling to T4(= 16TO) Index 41 to Index 43 show the number of free coupling channels (DSP<->C167 of time slots T2 to T4.	Dec.Plc.: 0 Unit: - Indices: 43 Type: O2	Menus: - Parameter menu - Board configuration - Drive setting - Upread/free access - Power section definition
r832 Phase Flow 832	Service parameter, only for Siemens service personnel "NL value" of the phase currents of the A/D converter. The hexadecimal values range from 8000h (max. shown negative current) to 7FF0h (max. shown positive current). Index 1: Phase L1 (U) Index 2: Phase L3 (W)	Dec.Plc.: 0 Unit: - Indices: 2 Type: I2	Menus: - Parameter menu - Upread/free access

Parameter	Description	Data	Read/write
r833 Drive Temp 833	Index 1: Inverter temperature Index 2: Rectifier temperature (for AC units with rectifer temperature sensor - depending on design)	Dec.Plc.: 0 Unit: °C Indices: 4 Type: I2	Menus: - Parameter menu - Upread/free access
P834* OFF1 on Fault 834	Parameter for entering faults where the drive reacts with a ramp-function generator ramp-down (OFF1) prior to a fault trip in the "Operation" status. Only faults which do not necessitate an immediate trip can be entered here. The following faults are not permitted: F006, F008, F010, F011, F015, F017, F023, F025, F026, F027	index1: 0 Min: 0 Max: 65535 Unit: - Indices: 5 Type: O2	Menus: - Parameter menu - Upread/free access Changeable in: - Drive setting - Ready
P835* CtrlBootOptPCB 835 not Compact PLUS	Service parameter, only for Siemens service personnel	index1: 0 Min: 0 Max: 2 Unit: - Indices: 7 Type: O2	Menus: - Parameter menu - Upread/free access Changeable in: - Drive setting
P835* CtrlBootOptPCB 835 Compact PLUS only	Service parameter, only for Siemens service personnel	index1: 0 Min: 0 Max: 2 Unit: - Indices: 3 Type: O2	Menus: - Parameter menu - Upread/free access Changeable in: - Drive setting
P836* DataOptPCBBoot 836	Service parameter, only for Siemens service personnel	index1: 0 Min: 0 Max: 65535 Unit: - Indices: 100 Type: O2	Menus: - Parameter menu - Upread/free access Changeable in: - Drive setting
P837* state TEST 837	Service parameter, only for Siemens service personnel Selection of trial operation, only for manufacturer	index1: 0 Min: 0 Max: 65535 Unit: - Indices: 3 Type: O2	Menus: - Parameter menu + Functions - Upread/free access Changeable in: - Drive setting
r838 UCE/OvTestResult 838	Service parameter, only for Siemens service personnel The result of the UCE and Imax test can be read out in this parameter. The result is coded bit-wise. Bit 7 Overvoltage Bit 6 Overcurrent phase W Bit 5 Overcurrent phase V Bit 4 Overcurrent phase U Bit 3 Not used Bit 2 UCE phase W Bit 1 UCE phase V Bit 0 UCE phase U	Dec.Plc.: 0 Unit: - Indices: - Type: V2	Menus: - Parameter menu + Functions - Upread/free access

Parameter	Description	Data	Read/write
P839* AdrConnector 839	Service parameter, only for Siemens service personnel Copies the contents of an addres into a connector value, thus enabling any random C16x variable (near, 16 bit address) to be interconnected. This means that any random (internal) variables can be traced. The address of the variables can be determined from the M66 file. The address (16 bit address) has to be entered in the index. Index 1-4 for near addresses Index 5-8 for DPR addresses (input of the 16-bit offset) Function number 258 -> P2952.58 Enter time slot Index -> connector number 1 -> K434 2 -> K435 3 -> K436 4 -> K437 5 -> K438 6 -> K439 7 -> K440 8 -> K441	index1: 0 Unit: - Indices: 8 Type: L2	Menus: - Parameter menu - Upread/free access Changeable in: - Drive setting
P840* RAM Addr 840	Service parameter, only for Siemens service personnel Address for direct Random Access Memory (RAM) on board CU. Indices: i001: CS: Code Segment (64kbyte-segment) i002: Off: Offset The contents of the memory cell is displayed in P841. Setting instructions for P840: - In access stage 3, the parameter can only be read, whereas in access stage 4, it can also be written. - Access stage 3 prevents the indicated value in the background from always being written to the visualized address.	index1: 0 Unit: - Indices: 2 Type: L2	Menus: - Parameter menu - Download - Upread/free access - Power section definition Changeable in: - Power section definition - Board configuration - Drive setting - Drive setting - Ready
P841* RAM Value 841	Service parameter, only for Siemens service personnel Contents of a memory cell on the CU board.	Init: 0 Unit: - Indices: - Type: L2	Menus: - Parameter menu - Download - Upread/free access - Power section definition Changeable in: - Power section definition - Board configuration - Drive setting - Drive setting - Ready
P842* DSP RAM Address 842	Service parameter, only for Siemens service personnel	index1: 0 Unit: - Indices: 2 Type: L2	Menus: - Parameter menu - Upread/free access Changeable in: - Power section definition - Board configuration - Drive setting - Drive setting - Ready

Parameter	Description	Data	Read/write
P843* DSP RAM Value 843	Service parameter, only for Siemens service personnel	Init: 0 Min: 0 Max: 65535 Unit: - Indices: - Type: O4	Menus: - Parameter menu - Upread/free access Changeable in: - Power section definition - Board configuration - Drive setting - Drive setting - Ready
P844* SEB AnaOut 844	Service parameter, only for Siemens service personnel Parameterization of the SEB board Index 1 to 4 : Extract level address SEB analog output 1 to 4. For this, no connector should be indicated in P845 for the analog output (value=0) Index 5 to 8 : Reinforcement SEB analog output 1 to 4 in graduation 2^n, e.g. value 5: reinforcement = 2^5 = 32. Attention: Hexadecimal input 10=A Index 9 to 12 : Offset SEB analog output 1 to 4. The value is specified as hexadecimal. 4000h=100%=5V. Index 13 to 16: Segment for address in Index 1 to 4 for SEB analog output 1 to 4.	index1: 0 Unit: - Indices: 16 Type: L2	Menus: - Parameter menu - Upread/free access Changeable in: - Drive setting - Ready
P845* SEB AnaOut 845	Service parameter, only for Siemens service personnel Output of connectors to the analog outputs of the SEB Indices 1 - 4 correspond to analog outputs 1 - 4 on the SEB Note: If an address is to be output, the parameter value must be zero before the address is entered in P844.	index1: 0 Unit: - Indices: 4 Type: L2 ,K	Menus: - Parameter menu - Upread/free access Changeable in: - Drive setting - Ready
P846 D channels T0 846	Service parameter, only for Siemens service personnel	Init: 0 Min: 0 Max: 4 Unit: - Indices: - Type: O2	Menus: - Parameter menu - Upread/free access Changeable in: - Drive setting - Ready
P847* Diagnostics 847	Mode in which the fault counter (in r849) should be used. 0 Delete all counters and then change over to 1. 1 Counters to count up an down. That applies to normal operation. In the event of a fault, the count is incremented by 10, and in the event of a valid value the counted is decremented by 1. 2 Counters to count up only. These can be used to detect sporadic faults that would otherwise remain undetected. 3 For future use If a fault counter counts beyond 100, F51 is tripped provided that fault tripping is implemented in the counter in question (see r849) and the fault trip is not suppressed in P848.	Init: 1 Min: 0 Max: 3 Unit: - Indices: - Type: O2	Menus: - Parameter menu - Upread/free access Changeable in: - Drive setting - Ready

Parameter	Description	Data	Read/write
P848* Config_Diagnos 848	Parameter for suppressing the fult causes given in r849 and alarm A28. The new alarm A28 and fault counter r849 are used for early recognition of latent encoder problems. Each index in P 848 belongs to the corresponding index in r849. Setting values: 0: No evaluation! Important, this value may be set only under exceptional circumstances after consultation with the hotline, because the fault sources is then suppressed!!! (Danger!) 1: If the fault count exceeds 100, the appropriate fault is tripped. 2: Alarm A28 is always set whenever the fault count is greater than 0. 3: Whenever the fault count exceeds 0, alarm A28 is set. If the fault count reaches 100, the associated fault is tripped, in so far as provision for a fault is made in the software.	index1: 3 Min: 0 Max: 3 Unit: - Indices: 30 Type: O2	Menus: - Parameter menu - Upread/free access Changeable in: - Drive setting - Ready

Parameter	Description	Data	Read/write
r849 DiagnosCounter 849	Each index contains a counter for fault diagnostics. The index used depends on the type of encoder in question. In the event of a fault, the value in the fault counter is incremented by 10. A correct value causes the value in the fault counter to be decremented by 1. If a value of 100 is exceeded, the reaction described below occurs. The parameter is used for early recognition of latent encoder problems. The type of fault handling described above does not lead to a fault message until more than 10% or all values are incorrect! Alarm A28 is set whenever one of the counts is greater than 0, and it is cyclically reset when all counts are at 0 again. Display of this alarm and the faults listed below can be suppressed with P848. The key to the indices is as follows: Index 1: ALARM_ANZAHL motor encoders: SSI-Alarmbit or Endat Alarmbit F51:49 in operation, otherwise A19 Index 2: ALARM_ANZAHL external encoders: SSI-Alarmbit or Endat Alarmbit F51:149 in operation, otherwise A21 Index 3: COMM_ERROR_ANZAHL motor encoders: Protocol error or CRC error F51:30 in operation, otherwise A19 Index 4: COMM_ERROR_ANZAHL external encoders: Protocol error or CRC error F51:130 in operation, otherwise A21 Index 5: RUHEPEGELFEHLER_ANZAHL motor encoders: Data line SSI or Endat has the wrong level F51:32 in operation, otherwise A19 Index 6: RUHEPEGELFEHLER_ANZAHL external encoders: Data line SSI or Endat has the wrong level F51:132 in operation, otherwise A21 Index 7: ADRESSFEHLER_ANZAHL moter encoders F51:34 Index 8: ADRESSFEHLER_ANZAHL external encoders F51:134 Index 9: SPANNUNG_FEHLER_ANZAHL motor encoders: Operating voltage overloaded F51:28 and A18 Index 10: SPANNUNG_FEHLER_ANZAHL external encoders Operating voltage overloaded F51:128 and A20 Index 11: AMPL_FEHLER_ANZAHL motor encoders A/B-track: On zero passage of one track, the level of the other was too low. F51:29 in operation, otherwise A18	Dec.Plc.: 0 Unit: - Indices: 30 Type: O2	Menus: - Parameter menu - Upread/free access

Parameter	Description	Data	Read/write
	Index 12: AMPL_FEHLER_ANZAHL ext. Geber A/B-track: On zero passage of one track, the level of the other was too low. F51:129 in operation, otherwise A20 Index 13: NULLSPUR_FEHLER_ANZAHL motor encoders More than 1.5 revolutions since the last zero pulse. F51:27 in operation Index 14: NULLSPUR_FEHLER_ANZAHL external encoders F51:127 in operation Index 15: NULLPUNKTABWEICHUNG_FEHLER_ANZAHL motor encoders: A zero point deviation was detected. Correction of the value if necessary, no error. Index 16: NULLPUNKTABWEICHUNG_FEHLER_ANZAHL external encoders Correction of the value if necessary, no error. . Index 17: ORIENTIERUNG_FEHLER_ANZAHL motor encoders: Position deviation of more than 90°el. of occurrence of a zero pulse (encoder) bzw. or on telegram readout (Endat-Multiturn P149.1=101; U950.19=5). F51:26 and A18 in operation, nothing else. Index 18: ORIENTIERUNG_FEHLER_ANZAHL external encoders No evaluation ! Index 19: DELTA_PROTOKOLL_FEHLER_ANZAHL motor encoders No evaluation ! Index 20: DELTA_PROTOKOLL_FEHLER_ANZAHL external encoders: The change of position in the last sample time was greater than the parameterized maximum value. F51:160 in operation, otherwise A21 Index 21: to 30: Reserved.		
r850 OP Special 1 850	Service parameter, only for Siemens service personnel. Parameter is not visible via the OP1S.	Dec.Plc.: 0 Unit: - Indices: 20 Type: O2	Menus: - Parameter menu - Upread/free access
r851 OP Special 2 851	Service parameter, only for Siemens service personnel. Parameter is not visible via the OP1S.	Dec.Plc.: 0 Unit: - Indices: 24 Type: O2	Menus: - Parameter menu - Upread/free access
P852* OP Special 3 852	Service parameter, only for Siemens service personnel. Parameter is not visible via the OP1S.	Init: 0 Min: -2147483647 Max: 2147483647 Unit: - Indices: - Type: I4	Menus: - Parameter menu - Upread/free access Changeable in:

Parameter	Description	Data	Read/write
r853 OP Special 4 853	Service parameter, only for Siemens service personnel. Parameter is not visible via the OP1S.	Dec.Plc.: 0 Unit: - Indices: - Type: O2	Menus: - Parameter menu - Upread/free access
r854 OP Special 5 854	Service parameter, only for Siemens service personnel. Parameter is not visible via the OP1S.	Dec.Plc.: 0 Unit: - Indices: - Type: O2	Menus: - Parameter menu - Upread/free access
P855 OP Special 6 855	Service parameter, only for Siemens service personnel. Parameter is not visible via the OP1S.	index1: 0 Min: 0 Max: 4294967293 Unit: - Indices: 8 Type: O4	Menus: - Parameter menu - Upread/free access Changeable in:
r856 OP Special 7 856	Service parameter, only for Siemens service personnel. Parameter is not visible via the OP1S.	Dec.Plc.: 0 Unit: - Indices: - Type: O2	Menus: - Parameter menu - Upread/free access
r857 OP Special 8 857	Service parameter, only for Siemens service personnel. Parameter is not visible via the OP1S.	Dec.Plc.: 0 Unit: - Indices: - Type: O2	Menus: - Parameter menu - Upread/free access
r858 OP Special 9 858	Service parameter, only for Siemens service personnel. Parameter is not visible via the OP1S.	Dec.Plc.: 0 Unit: - Indices: - Type: O2	Menus: - Parameter menu - Upread/free access
P880* 880	Service parameter, only for Siemens service personnel. Parameter is not visible via the OP1S.	index1: 0 Unit: - Indices: 32 Type: L2	Menus: - Parameter menu - Upread/free access Changeable in: - Drive setting - Ready
r881 881	Service parameter, only for Siemens service personnel. Parameter is not visible via the OP1S.	Dec.Plc.: 0 Unit: - Indices: 101 Type: L2	Menus: - Parameter menu - Upread/free access
P882* 882 Compact PLUS only	Service parameter, only for Siemens service personnel. Parameter is not visible via the OP1S.	index1: 0 Unit: - Indices: 32 Type: L2 ,K	Menus: - Parameter menu - Upread/free access Changeable in: - Drive setting
P883* 883 Compact PLUS only	Service parameter, only for Siemens service personnel. Parameter is not visible via the OP1S.	index1: 0 Unit: - Indices: 32 Type: L2 ,B	Menus: - Parameter menu - Upread/free access Changeable in: - Drive setting
P888* Quick Param 888	Service parameter, only for Siemens service personnel. Parameter is not visible via the OP1S.	Init: 0 Min: 0 Max: 10 Unit: - Indices: - Type: O2	Menus: - Parameter menu - Upread/free access Changeable in:

Parameter	Description	Data	Read/write
P889* Fixed Settings 889	Service parameter, only for Siemens service personnel. Parameter is not visible via the OP1S.	Init: 0 Min: 0 Max: 1 Unit: - Indices: - Type: O2	Menus: - Parameter menu - Upread/free access Changeable in:
P891* Technology 891	Service parameter, only for Siemens service personnel. Parameter is not visible via the OP1S.	Init: 0 Min: 0 Max: 2 Unit: - Indices: - Type: O2	Menus: - Parameter menu - Upread/free access Changeable in:
P892* Diagnostics 892	Service parameter, only for Siemens service personnel. Parameter is not visible via the OP1S.	Init: 0 Min: 0 Max: 2 Unit: - Indices: - Type: O2	Menus: - Parameter menu - Upread/free access Changeable in:
P893* Reg/GateUnit 893	Service parameter, only for Siemens service personnel. Parameter is not visible via the OP1S.	Init: 0 Min: 0 Max: 4 Unit: - Indices: - Type: O2	Menus: - Parameter menu - Upread/free access Changeable in:
P894* Mot/EncodData 894	Service parameter, only for Siemens service personnel. Parameter is not visible via the OP1S.	Init: 0 Min: 0 Max: 1 Unit: - Indices: - Type: O2	Menus: - Parameter menu - Upread/free access Changeable in:
P895* Communication 895	Service parameter, only for Siemens service personnel. Parameter is not visible via the OP1S.	Init: 0 Min: 0 Max: 3 Unit: - Indices: - Type: O2	Menus: - Parameter menu - Upread/free access Changeable in:
P896 Parameter Menu 896	Service parameter, only for Siemens service personnel. Parameter is not visible via the OP1S.	Init: 0 Min: 0 Max: 12 Unit: - Indices: - Type: O2	Menus: - Parameter menu - Upread/free access Changeable in:
P897* Menu Select 897	Service parameter, only for Siemens service personnel. Parameter is not visible via the OP1S.	Init: 0 Min: 0 Max: 8 Unit: - Indices: - Type: O2	Menus: - Parameter menu - Upread/free access Changeable in:
P898* MotionControl 898	Service parameter, only for Siemens service personnel. Parameter is not visible via the OP1S.	Init: 0 Min: 0 Max: 6 Unit: - Indices: - Type: O2	Menus: - Parameter menu - Upread/free access Changeable in:

Parameter	Description	Data	Read/write
P918* CB Bus Address 918	Function parameter for entering the bus addresses for a built-in communications board (CBx). The significance of the bus address depends on the protocol. If a set value is not accepted by the communication board, the unit trips a fault. Note: This parameter is not overwritten on downloading via Profibus. Index 1: 1st CB Index 2: 2nd CB In the case of a factory setting via 1st CB or 2nd CB, this parameter is not reset.	index1: 3 Min: 0 Max: 200 Unit: - Indices: 2 Type: O2	Menus: - Parameter menu + Communication + Field bus interfaces - Quick parameterization - Board configuration - Drive setting - Upread/free access Changeable in: - Board configuration - Drive setting
P922* Telegram Select 922	The parameter value shows the set telegram to PROFIdrive V3. It is only possible to change the parameter with a suitable parameterization. The parameter value 999 designates a telegram that has been freely parameterized via the BiCo connection (parameter P734 or P736 and connectors K3000 to K3016 or K8000 to 8016). In order to set a standard telegram a script has to be currently carried out. The script files for the following standard telegrams are available: 5. Only visible if the unit is parameterized acc. to PROFIdrive V3.	Init: 999 Min: 0 Max: 65535 Unit: - Indices: - Type: O2	Menus: - Parameter menu + Communication + Field bus interfaces - Quick parameterization - Board configuration - Drive setting - Download - Upread/free access Changeable in: - Board configuration - Drive setting - Drive setting
r923 Profibus StdSig 923	List of all parameters for standard signals Specific parameter for PROFIdrive V3.	Dec.Plc.: 0 Unit: - Indices: 100 Type: O2	Menus: - Parameter menu + Communication + Field bus interfaces + Motor/encoder + Encoder data - Upread/free access
P925* Max. faults 925	Fault level of the sign-of-life receive block A fault will be set, if (K0257 / 10) >= (P809 + 1) In function diagram 170	Init: 4 Min: 1 Max: 10 Unit: - Indices: - Type: O2	Menus: - Parameter menu + Releases - Upread/free access Changeable in: - Drive setting - Ready
P927* Parameter Access 927	Function parameter to enable interfaces for parameterization. For description, see parameter P053. Only visible if the unit is parameterized acc. to PROFIdrive V3.	Init: 7 Min: 0 Max: 65535 Unit: - Indices: - Type: V2	Menus: - User parameters- Parameter menu + General parameters - Fixed settings - Quick parameterization - Board configuration - Drive setting - Download - Upread/free access - Power section definition Changeable in: - Power section definition - Board configuration - Drive setting - Drive setting - Ready
r930 Operating Mode 930	Profibus-specific parameter The parameter indicates the mode of operation to PROFIdrive V3	Dec.Plc.: 0 Unit: - Indices: - Type: O2	Menus: - Parameter menu - Upread/free access

Parameter	Description	Data	Read/write
r944 Fault Counter 944	The fault counter is incremented each time there is a change in the fault buffer (P947, P948, P782). This allows a check to be performed on whether data in the fault buffer is being extracted consistently.	Dec.Plc.: 0 Unit: - Indices: - Type: O2	Menus: - Parameter menu - Drive setting - Upread/free access
r947 Fault Memory 947	Visualization parameter for displaying the last 8 fault trips. For each fault trip, up to 8 faults occurring at the same time can be stored. Only those faults are stored to which a fault number is assigned. Index 1 to 8: 1st (last) fault trip, faults 1 to 8 Index 9 to 16: 2nd fault trip, faults 1 to 8 Index 17 to 24: 3rd fault trip, faults 1 to 8 Index 25 to 32: 4th fault trip, faults 1 to 8 Index 33 to 40: 5th fault trip, faults 1 to 8 Index 41 to 48: 6th fault trip, faults 1 to 8 Index 49 to 56: 7th fault trip, faults 1 to 8 Index 57 to 64: 8th (oldest) fault trip, faults 1 to 8 The value 0 in index 1 means that no fault is active at the present time. Further information for describing fault trips is contained in r782, r949, P952. The fault memory is deleted with the help of P952.	Dec.Plc.: 0 Unit: - Indices: 64 Type: O2	Menus: - Parameter menu + Diagnostics + Faults/warnings - Drive setting - Upread/free access
r949 Fault Value 949	Visualization parameter for displaying fault values. Fault values contain additional information on the faults which have occurred and allow more exact diagnosis. The fault values are assigned to the faults and are stored in the same indices as the associated fault numbers in r947. Indices 1 to 8: 1st (last) fault trip, fault values 1 to 8 Indices 9 to 16: 2nd fault trip, fault values 1 to 8 Indices 17 to 24: 3rd fault trip, fault values 1 to 8 Indices 25 to 32: 4th fault trip, fault values 1 to 8 Indices 33 to 40: 5th fault trip, fault values 1 to 8 Indices 41 to 48: 6th fault trip, fault values 1 to 8 Indices 49 to 56: 7th fault trip, fault values 1 to 8 Indices 57 to 64: 8th (oldest) fault trip, fault values 1 to 8 Further information on describing fault trips is contained in in r782, r947, P952. The fault memory is deleted with the help of P952.	Dec.Plc.: 0 Unit: - Indices: 64 Type: O2	Menus: - Parameter menu + Diagnostics + Faults/warnings - Drive setting - Upread/free access
r951 FaultTextList 951	List of fault texts. Each fault text is stored under the index corresponding to its fault.	Dec.Plc.: 0 Unit: - Indices: 254 Type: O2	Menus: - Parameter menu + Diagnostics + Faults/warnings - Upread/free access
P952* # of Faults 952	Function parameters for displaying the stored fault trips and for deletion of the fault memory. If 0 is entered, the whole fault memory consisting of r782, r947, r949 is deleted.	Init: 0 Min: 0 Max: 8 Unit: - Indices: - Type: O2	Menus: - Parameter menu + Diagnostics + Faults/warnings - Upread/free access Changeable in: - Drive setting
r953 Warning Param 1 953	Visualization parameter for displaying which of warnings 1 to 16 are active.	Dec.Plc.: 0 Unit: - Indices: - Type: V2	Menus: - Parameter menu + Diagnostics + Faults/warnings - Upread/free access
r954 Warning Param 2 954	Visualization parameter for displaying which of warnings 17 to 32 are active.	Dec.Plc.: 0 Unit: - Indices: - Type: V2	Menus: - Parameter menu + Diagnostics + Faults/warnings - Upread/free access

Parameter	Description	Data	Read/write
r955 Warning Param 3 955	Visualization parameter for displaying which of warnings 33 to 48 are active.	Dec.Plc.: 0 Unit: - Indices: - Type: V2	Menus: - Parameter menu + Diagnostics + Faults/warnings - Upread/free access
r956 Warning Param 4 956	Visualization parameter for displaying which of warnings 49 to 64 are active.	Dec.Plc.: 0 Unit: - Indices: - Type: V2	Menus: - Parameter menu + Diagnostics + Faults/warnings - Upread/free access
r957 Warning Param 5 957	Visualization parameter for displaying which of warnings 65 to 80 are active.	Dec.Plc.: 0 Unit: - Indices: - Type: V2	Menus: - Parameter menu + Diagnostics + Faults/warnings - Upread/free access
r958 Warning Param 6 958	Visualization parameter for displaying which of warnings 81 to 96 are active. Warnings 81 to 96 are tripped by a built-in communication board (CBx).	Dec.Plc.: 0 Unit: - Indices: - Type: V2	Menus: - Parameter menu + Diagnostics + Faults/warnings - Upread/free access
r959 Warning Param 7 959	Visualization parameter for displaying which of warnings 97 to 112 are active. Warnings 97 to 112 are tripped by a built-in technology board.	Dec.Plc.: 0 Unit: - Indices: - Type: V2	Menus: - Parameter menu + Diagnostics + Faults/warnings - Upread/free access
r960 Warning Param 8 960	Visualization parameter for displaying which of warnings 113 to 128 are active. Warnings 113 to 128 are tripped by a built-in technology board.	Dec.Plc.: 0 Unit: - Indices: - Type: V2	Menus: - Parameter menu + Diagnostics + Faults/warnings - Upread/free access
r964 Drive ID 964	Function parameter for unit data identification. (see also PROFIDrive Profile Version 3). Index 1: Manufacturer value=42 Index 2: Unit type Index 3: Version (format xxyy) Index 4: Date of firmware (year) Index 5: Date of firmware (day/month) The value of the unit type is 3080 on MASTERDRIVES VC, 3085 on MASTERDRIVES VC Compact PLUS, 3090 on MASTERDRIVES MC, 3100 on MASTERDRIVES MC Compact PLUS. Only visible if the unit has been parameterized according to PROFIdrive V3	Dec.Plc.: 0 Unit: - Indices: 7 Type: O2	Menus: - Parameter menu - Fixed settings - Quick parameterization - Board configuration - Drive setting - Download - Upread/free access - Power section definition
r965 Profile # 965	Profibus-specific parameter Value depends on whether the unit has been parameterized according to PROFIdrive V3.	Dec.Plc.: 0 Unit: - Indices: - Type: OS	Menus: - Parameter menu - Fixed settings - Quick parameterization - Board configuration - Drive setting - Download - Upread/free access - Power section definition
r967 Control Word 1 967	Visualization parameter for displaying control word 1. Bits 0 to 15 are displayed.	Dec.Plc.: 0 Unit: - Indices: - Type: V2	Menus: - Parameter menu - Upread/free access

Parameter	Description	Data	Read/write
r968 Status Word 1 968	Visualization parameter for displaying status word 1. Bits 0 to 15 are displayed.	Dec.Plc.: 0 Unit: - Indices: - Type: V2	Menus: - Parameter menu - Upread/free access
P970* Factory Setting 970	Function parameter for starting the parameter reset to a factory or fixed setting. After completion of the factory setting, this parameter is also reset to its original value, 1. 0 = Start parameter reset 1 = No parameter reset Caution: A parameter reset causes the loss of all parameter changes. If the factory setting of the parameter is made via an interface (SCom1, SCom2, SCB2, 1st CB, 2nd CB) to 0 = "Start parameter reset", the following parameters are not reset: SCom1, SCom2: P053, P700-704 SCB2: P053, P700-704, P696 1st CB, 2nd CB: P053, P711-722, P918 The following parameters are only reset to a certain extent: P050, P072	Init: 1 Min: 0 Max: 1 Unit: - Indices: - Type: O2	Menus: - Parameter menu + Functions - Fixed settings - Upread/free access Changeable in: - Board configuration - Drive setting - Drive setting
P971* EEPROM Saving 971	Function parameter for starting saving of the parameters from the RAM to the EEPROM. Volatilely stored parameters can be transferred to the EEPROM by overwriting a parameter value of 0 with 1. The parameter values are then stored non-volatilely and are secured against mains failure. 0 = No saving 1 = One-time saving The parameter must be reset manually to 0.	Init: 0 Min: 0 Max: 1 Unit: - Indices: - Type: O2	Menus: - Parameter menu + General parameters - Upread/free access Changeable in: - Drive setting - Ready
P972* Power On Reset 972	Power-On reset The Power-On reset works in the same way as Electronic voltage Off -> On. This initializes the control board and leads to a loss of communication. This value should therefore not normally be included in a download file.	Init: Min: 0 Max: 1 Unit: - Indices: - Type: O2	Menus: - Parameter menu - Board configuration - Drive setting - Upread/free access - Power section definition Changeable in: - Power section definition - Board configuration - Drive setting - Drive setting
r979 sensor format 979		Dec.Plc.: 0 Unit: - Indices: 30 Type: O4	Menus: - Parameter menu - Upread/free access
r980 Par # List pt1 980	Visualization parameter for displaying the first 100 parameter numbers in the range 0 to 999. The parameter numbers are arranged in ascending order. The first 0 occuring in the index signals that there are no further parameter numbers. If the number of indices is not sufficient to display all parameter numbers, index 101 contains the parameter numbers in which the list is continued.	Dec.Plc.: 0 Unit: - Indices: 101 Type: O2	Menus: - Parameter menu - Upread/free access

Parameter	Description	Data	Read/write
r981 Par # List pt2 981	Visualization parameter for displaying the second 100 parameter numbers in the range 0 to 999. The parameter numbers are arranged in ascending order. The first 0 occuring in the index signals that there are no further parameter numbers. If the number of indices is not sufficient to display all parameter numbers, index 101 contains the parameter numbers in which the list is continued.	Dec.Plc.: 0 Unit: - Indices: 101 Type: O2	Menus: - Parameter menu - Upread/free access
r982 Par # List pt3 982	Visualization parameter for displaying the third 100 parameter numbers in the range 0 to 999. The parameter numbers are arranged in ascending order. The first 0 occuring in the index signals that there are no further parameter numbers. If the number of indices is not sufficient to display all parameter numbers, index 101 contains the parameter numbers in which the list is continued.	Dec.Plc.: 0 Unit: - Indices: 101 Type: O2	Menus: - Parameter menu - Upread/free access
r983 Par # List pt4 983	Visualization parameter for displaying the fourth 100 parameter numbers in the range 0 to 999. The parameter numbers are arranged in ascending order. The first 0 occuring in the index signals that there are no further parameter numbers. If the number of indices is not sufficient to display all parameter numbers, index 101 contains the parameter numbers in which the list is continued.	Dec.Plc.: 0 Unit: - Indices: 101 Type: O2	Menus: - Parameter menu - Upread/free access
r984 Par # List pt5 984	Visualization parameter for displaying the fifth 100 parameter numbers in the range 0 to 999. The parameter numbers are arranged in ascending order. The first 0 occuring in the index signals that there are no further parameter numbers. If the number of indices is not sufficient to display all parameter numbers, index 101 contains the parameter numbers in which the list is continued.	Dec.Plc.: 0 Unit: - Indices: 101 Type: O2	Menus: - Parameter menu - Upread/free access
r985 Par # List pt6 985	Visualization parameter for displaying the sixth 100 parameter numbers in the range 0 to 999. The parameter numbers are arranged in ascending order. The first 0 occuring in the index signals that there are no further parameter numbers. If the number of indices is not sufficient to display all parameter numbers, index 101 contains the parameter numbers in which the list is continued.	Dec.Plc.: 0 Unit: - Indices: 101 Type: O2	Menus: - Parameter menu - Upread/free access
r986 Par # List pt7 986	Visualization parameter for displaying the seventh 100 parameter numbers in the range 0 to 999. The parameter numbers are arranged in ascending order. The first 0 occuring in the index signals that there are no further parameter numbers. If the number of indices is not sufficient to display all parameter numbers, index 101 contains the parameter numbers in which the list is continued.	Dec.Plc.: 0 Unit: - Indices: 101 Type: O2	Menus: - Parameter menu - Upread/free access
r987 Par # List pt8 987	Visualization parameter for displaying the eighth 100 parameter numbers in the range 0 to 999. The parameter numbers are arranged in ascending order. The first 0 occuring in the index signals that there are no further parameters. If the number of indices is not sufficient to display all parameter numbers, index 101 contains the parameter numbers in which the list is continued.	Dec.Plc.: 0 Unit: - Indices: 101 Type: O2	Menus: - Parameter menu - Upread/free access
r988 Par # List pt9 988	Visualization parameter for displaying the ninth 100 parameter numbers in the range 0 to 999. The. parameter numbers are arranged in ascending order. The first 0 occuring in the index signals that there are no further parameter numbers. If the number of indices is not sufficient to display all parameter numbers, index 101 contains the parameter numbers in which the list is continued.	Dec.Plc.: 0 Unit: - Indices: 101 Type: O2	Menus: - Parameter menu - Upread/free access

Parameter	Description	Data	Read/write
r989 Par # List pt10 989	Visualization parameter for displaying the tenth 100 parameter numbers in the range 0 to 999. The parameter numbers are arranged in ascending order. The first 0 occuring in the index signals that there are no further parameter numbers.	Dec.Plc.: 0 Unit: - Indices: 101 Type: O2	Menus: - Parameter menu - Upread/free access
r990 Par # List chg1 990	Visualization parameters for displaying the first 100 changed parameter numbers in the range 0 to 999. The parameter numbers are arranged in ascending order. The first 0 occuring in the index signals that there are no further parameters. If the number of indices is not sufficient to display all parameter numbers, index 101 contains the parameter numbers in which the list is continued.	Dec.Plc.: 0 Unit: - Indices: 101 Type: O2	Menus: - Parameter menu - Upread/free access
r991 Par # List chg2 991	Visualization parameters for displaying the second 100 changed parameter numbers in the range 0 to 999. The parameter numbers are arranged in ascending order. The first 0 occuring in the index signals that there are no further parameters. If the number of indices is not sufficient to display all parameter numbers, index 101 contains the parameter numbers in which the list is continued.	Dec.Plc.: 0 Unit: - Indices: 101 Type: O2	Menus: - Parameter menu - Upread/free access
r992 Par # List chg3 992	Visualization parameters for displaying the third 100 changed parameter numbers in the range 0 to 999. The. parameter numbers are arranged in ascending order. The first 0 occuring in the index signals that there are no further parameters.	Dec.Plc.: 0 Unit: - Indices: 101 Type: O2	Menus: - Parameter menu - Upread/free access
U001 FixSetp 17 2001	Function parameter for entering fixed setpoint 17.	index1: 0,00 Min: -200,00 Max: 200,00 Unit: % Indices: 4 ,FDS Type: I2	Menus: - Parameter menu + Free blocks - Upread/free access Changeable in: - Drive setting - Ready
U002 FixSetp 18 2002	Function parameter for entering fixed setpoint 18.	index1: 0,00 Min: -200,00 Max: 200,00 Unit: % Indices: 4 ,FDS Type: I2	Menus: - Parameter menu + Free blocks - Upread/free access Changeable in: - Drive setting - Ready
U003 FixSetp 19 2003	Function parameter for entering fixed setpoint 19.	index1: 0,00 Min: -200,00 Max: 200,00 Unit: % Indices: 4 ,FDS Type: I2	Menus: - Parameter menu + Free blocks - Upread/free access Changeable in: - Drive setting - Ready
U004 FixSetp 20 2004	Function parameter for entering fixed setpoint 20.	index1: 0,00 Min: -200,00 Max: 200,00 Unit: % Indices: 4 ,FDS Type: I2	Menus: - Parameter menu + Free blocks - Upread/free access Changeable in: - Drive setting - Ready
U005 FixSetp 21 2005	Function parameter for entering fixed setpoint 21.	index1: 0,00 Min: -200,00 Max: 200,00 Unit: % Indices: 4 ,FDS Type: I2	Menus: - Parameter menu + Free blocks - Upread/free access Changeable in: - Drive setting - Ready

Parameter	Description	Data	Read/write
U006 FixSetp 22 2006	Function parameter for entering fixed setpoint 22.	index1: 0,00 Min: -200,00 Max: 200,00 Unit: % Indices: 4 ,FDS Type: I2	Menus: - Parameter menu + Free blocks - Upread/free access Changeable in: - Drive setting - Ready
U007 FixSetp 23 2007	Function parameter for entering fixed setpoint 23.	index1: 0,00 Min: -200,00 Max: 200,00 Unit: % Indices: 4 ,FDS Type: I2	Menus: - Parameter menu + Free blocks - Upread/free access Changeable in: - Drive setting - Ready
U008 FixSetp 24 2008	Function parameter for entering fixed setpoint 24.	index1: 0,00 Min: -200,00 Max: 200,00 Unit: % Indices: 4 ,FDS Type: I2	Menus: - Parameter menu + Free blocks - Upread/free access Changeable in: - Drive setting - Ready
U009 FixSetp 25 2009	Function parameter for entering fixed setpoint 25.	index1: 0 Min: 0 Max: 65535 Unit: - Indices: 4 ,FDS Type: O2	Menus: - Parameter menu + Free blocks - Upread/free access Changeable in: - Drive setting - Ready
U011 FixSetp 26 2011	Function parameter for entering fixed setpoint 26.	index1: 0,000 Min: -200,000 Max: 200,000 Unit: % Indices: 4 ,FDS Type: I4	Menus: - Parameter menu + Free blocks - Upread/free access Changeable in: - Drive setting - Ready
U012 FixSetp 27 2012	Function parameter for entering fixed setpoint 27.	index1: 0,000 Min: -200,000 Max: 200,000 Unit: % Indices: 4 ,FDS Type: I4	Menus: - Parameter menu + Free blocks - Upread/free access Changeable in: - Drive setting - Ready
U013 FixSetp 28 2013	Function parameter for entering fixed setpoint 28.	index1: 0,000 Min: -200,000 Max: 200,000 Unit: % Indices: 4 ,FDS Type: I4	Menus: - Parameter menu + Free blocks - Upread/free access Changeable in: - Drive setting - Ready
U014 FixSetp 29 2014	Function parameter for entering fixed setpoint 29.	index1: 0,000 Min: -200,000 Max: 200,000 Unit: % Indices: 4 ,FDS Type: I4	Menus: - Parameter menu + Free blocks - Upread/free access Changeable in: - Drive setting - Ready

Parameter	Description	Data	Read/write
U015 FixSetp 30 2015	Function parameter for entering fixed setpoint 30.	index1: 0 Min: - 2147483647 Max: 2147483647 Unit: - Indices: 4 ,FDS Type: I4	Menus: - Parameter menu + Free blocks - Upread/free access Changeable in: - Drive setting - Ready
U016 FixSetp 31 2016	Function parameter for entering fixed setpoint 31.	index1: 0 Min: - 2147483647 Max: 2147483647 Unit: - Indices: 4 ,FDS Type: I4	Menus: - Parameter menu + Free blocks - Upread/free access Changeable in: - Drive setting - Ready
U017 FixSetp 32 2017	Function parameter for entering fixed setpoint 32.	index1: 0 Min: - 2147483647 Max: 2147483647 Unit: - Indices: 4 ,FDS Type: I4	Menus: - Parameter menu + Free blocks - Upread/free access Changeable in: - Drive setting - Ready
U018 FixSetp 33 2018	Function parameter for entering fixed setpoint 33.	index1: 0 Min: - 2147483647 Max: 2147483647 Unit: - Indices: 4 ,FDS Type: I4	Menus: - Parameter menu + Free blocks - Upread/free access Changeable in: - Drive setting - Ready
U019* Src SH1 KK 2019	Sample&Hold element Input parameter for the double word connectors	index1: 0 Unit: - Indices: 4 Type: L2 ,K ,K	Menus: - Parameter menu + Free blocks - Upread/free access Changeable in: - Drive setting
U020* Src SH1 K 2020	Sample&Hold element Input parameter for connectors	index1: 0 Unit: - Indices: 8 Type: L2 ,K	Menus: - Parameter menu + Free blocks - Upread/free access Changeable in: - Drive setting
U021 Fixed Bit 1 2021	Function parameter for entering fixed bit 1.	index1: 0 Min: 0 Max: 1 Unit: - Indices: 4 ,FDS Type: O2	Menus: - Parameter menu + Free blocks - Upread/free access Changeable in: - Drive setting - Ready
U022 Fixed Bit 2 2022	Function parameter for entering fixed bit 2.	index1: 0 Min: 0 Max: 1 Unit: - Indices: 4 ,FDS Type: O2	Menus: - Parameter menu + Free blocks - Upread/free access Changeable in: - Drive setting - Ready

Parameter	Description	Data	Read/write
U023 Fixed Bit 3 2023	Function parameter for entering fixed bit 3.	index1: 0 Min: 0 Max: 1 Unit: - Indices: 4 ,FDS Type: O2	Menus: - Parameter menu + Free blocks - Upread/free access Changeable in: - Drive setting - Ready
U024 Fixed Bit 4 2024	Function parameter for entering fixed bit 4.	index1: 0 Min: 0 Max: 1 Unit: - Indices: 4 ,FDS Type: O2	Menus: - Parameter menu + Free blocks - Upread/free access Changeable in: - Drive setting - Ready
U025 Fixed Bit 5 2025	Function parameter for entering fixed bit 5.	index1: 0 Min: 0 Max: 1 Unit: - Indices: 4 ,FDS Type: O2	Menus: - Parameter menu + Free blocks - Upread/free access Changeable in: - Drive setting - Ready
U026 Fixed Bit 6 2026	Function parameter for entering fixed bit 6.	index1: 0 Min: 0 Max: 1 Unit: - Indices: 4 ,FDS Type: O2	Menus: - Parameter menu + Free blocks - Upread/free access Changeable in: - Drive setting - Ready
U027 Fixed Bit 7 2027	Function parameter for entering fixed bit 7.	index1: 0 Min: 0 Max: 1 Unit: - Indices: 4 ,FDS Type: O2	Menus: - Parameter menu + Free blocks - Upread/free access Changeable in: - Drive setting - Ready
U028 Fixed Bit 8 2028	Function parameter for entering fixed bit 8.	index1: 0 Min: 0 Max: 1 Unit: - Indices: 4 ,FDS Type: O2	Menus: - Parameter menu + Free blocks - Upread/free access Changeable in: - Drive setting - Ready
U029* Src SH2 KK 2029	Sample&Hold element Input parameter for the double word connectors	index1: 0 Unit: - Indices: 4 Type: L2 ,K ,K	Menus: - Parameter menu + Free blocks - Upread/free access Changeable in: - Drive setting
U030* Src SH2 K 2030	Sample&Hold element Input parameter for connectors	index1: 0 Unit: - Indices: 8 Type: L2 ,K	Menus: - Parameter menu + Free blocks - Upread/free access Changeable in: - Drive setting
U031* Src Conn Disp 1 2031	BICO parameter for selecting the connector for connector display 1.	Init: 0 Unit: - Indices: - Type: L2 ,K	Menus: - Parameter menu + Free blocks - Upread/free access Changeable in: - Drive setting - Ready

Parameter	Description	Data	Read/write
n032 Conn Disp 1 2032	Visualization parameter for connector display 1.	Dec.Plc.: 1 Unit: % Indices: - Type: I2	Menus: - Parameter menu + Free blocks - Upread/free access
U033* Src Conn Disp 2 2033	BICO parameter for selecting the connector for connector display 2.	Init: 0 Unit: - Indices: - Type: L2 ,K	Menus: - Parameter menu + Free blocks - Upread/free access Changeable in: - Drive setting - Ready
n034 Conn Disp 2 2034	Visualization parameter for connector display 2.	Dec.Plc.: 1 Unit: % Indices: - Type: I2	Menus: - Parameter menu + Free blocks - Upread/free access
U035* Src Conn Disp 3 2035	BICO parameter for selecting the connector for connector display 3.	Init: 0 Unit: - Indices: - Type: L2 ,K	Menus: - Parameter menu + Free blocks - Upread/free access Changeable in: - Drive setting - Ready
n036 Conn Disp 3 2036	Visualization parameter for connector display 3.	Dec.Plc.: 1 Unit: % Indices: - Type: I2	Menus: - Parameter menu + Free blocks - Upread/free access
U037* Src DConn Disp 1 2037	BICO parameter for selecting the connector for double-connector display 1.	Init: 0 Unit: - Indices: - Type: L2 ,K ,K	Menus: - Parameter menu + Free blocks - Upread/free access Changeable in: - Drive setting - Ready
n038 DConn Disp 1 2038	Visualization parameter for double-connector display 1.	Dec.Plc.: 3 Unit: % Indices: - Type: I4	Menus: - Parameter menu + Free blocks - Upread/free access
U039* Src DConn Disp 2 2039	BICO parameter for selecting the connector for double-connector display 2.	Init: 0 Unit: - Indices: - Type: L2 ,K ,K	Menus: - Parameter menu + Free blocks - Upread/free access Changeable in: - Drive setting - Ready
n040 DConn Disp 2 2040	Visualization parameter for double-connector display 2	Dec.Plc.: 3 Unit: % Indices: - Type: I4	Menus: - Parameter menu + Free blocks - Upread/free access
U041* Src DConn Disp 3 2041	BICO parameter for selecting the connector for double-connector display 3	Init: 0 Unit: - Indices: - Type: L2 ,K ,K	Menus: - Parameter menu + Free blocks - Upread/free access Changeable in: - Drive setting - Ready
n042 DConn Disp 3 2042	Visualization parameter for double-connector display 3	Dec.Plc.: 0 Unit: - Indices: - Type: I4	Menus: - Parameter menu + Free blocks - Upread/free access

Parameter	Description	Data	Read/write
U043* Src DConn Disp 4 2043	BICO parameter for selecting the connector for double-connector display 4	Init: 0 Unit: - Indices: - Type: L2 ,K ,K	Menus: - Parameter menu + Free blocks - Upread/free access Changeable in: - Drive setting - Ready
n044 DConn Disp 4 2044	Visualization parameter for double-connector display 4	Dec.Plc.: 0 Unit: - Indices: - Type: I4	Menus: - Parameter menu + Free blocks - Upread/free access
U045* Src Bin Disp 1 2045	BICO parameter for selecting the binector for binector display 1.	Init: 0 Unit: - Indices: - Type: L2 ,B	Menus: - Parameter menu + Free blocks - Upread/free access Changeable in: - Drive setting - Ready
n046 Bin Disp 1 2046	Visualization parameter for binector display 1.	Dec.Plc.: 0 Unit: - Indices: - Type: O2	Menus: - Parameter menu + Free blocks - Upread/free access
U047* Src Bin Disp 2 2047	BICO parameter for selecting the binector for binector display 2.	Init: 0 Unit: - Indices: - Type: L2 ,B	Menus: - Parameter menu + Free blocks - Upread/free access Changeable in: - Drive setting - Ready
n048 Bin Disp 2 2048	Visualization parameter of binector display 2	Dec.Plc.: 0 Unit: - Indices: - Type: O2	Menus: - Parameter menu + Free blocks - Upread/free access
U049* Src Bin Disp 3 2049	BICO parameter for selecting the binector for binector display 3	Init: 0 Unit: - Indices: - Type: L2 ,B	Menus: - Parameter menu + Free blocks - Upread/free access Changeable in: - Drive setting - Ready
n050 Bin Disp 3 2050	Visualization parameter of binector display 3	Dec.Plc.: 0 Unit: - Indices: - Type: O2	Menus: - Parameter menu + Free blocks - Upread/free access
U051* Src Bin Disp 4 2051	BICO parameter for selecting the binector for binector display 4	Init: 0 Unit: - Indices: - Type: L2 ,B	Menus: - Parameter menu + Free blocks - Upread/free access Changeable in: - Drive setting - Ready
n052 Bin Disp 4 2052	Visualization parameter of binector display 4	Dec.Plc.: 0 Unit: - Indices: - Type: O2	Menus: - Parameter menu + Free blocks - Upread/free access

Parameter	Description	Data	Read/write
U053* SrcConnDispSmth 2053	BICO parameter for selecting the connector for connector display with smoothing.	Init: 0 Unit: - Indices: - Type: L2 ,K	Menus: - Parameter menu + Free blocks - Upread/free access Changeable in: - Drive setting - Ready
n054 Conn Disp Smooth 2054	Visualization parameter of connector display with smoothing	Dec.Plc.: 2 Unit: % Indices: - Type: I2	Menus: - Parameter menu + Free blocks - Upread/free access
U055* SrcDConnDispSmth 2055	BICO parameter for selecting the connector for double-connector display with smoothing.	Init: 0 Unit: - Indices: - Type: L2 ,K ,K	Menus: - Parameter menu + Free blocks - Upread/free access Changeable in: - Drive setting - Ready
n056 DConnDisp Smooth 2056	Visualization parameter of the double-connector display with smoothing.	Dec.Plc.: 3 Unit: % Indices: - Type: I4	Menus: - Parameter menu + Free blocks - Upread/free access
U057* SrcBin/Con Conv4 2057	BICO parameter for selecting the binectors for binector/connector converter 1.	index1: 0 Unit: - Indices: 16 Type: L2 ,B	Menus: - Parameter menu + Free blocks - Upread/free access Changeable in: - Drive setting
n058 IndBin/Con Conv4 2058	Visualization parameter of binector/connector converter 1.	Dec.Plc.: 0 Unit: - Indices: - Type: V2	Menus: - Parameter menu + Free blocks - Upread/free access
U059* Src SH1 B 2059	Sample&Hold module Input parameter for binectors	index1: 0 Unit: - Indices: 8 Type: L2 ,B	Menus: - Parameter menu + Free blocks - Upread/free access Changeable in: - Drive setting
U060* SH1 Time Slot 2060	Sample&Hold element Parameter for entering the slower time slot	Init: 2 Min: 2 Max: 10 Unit: - Indices: - Type: O2	Menus: - Parameter menu + Free blocks - Upread/free access Changeable in: - Drive setting
U061* Src Fault F148 2061	BICO parameter for selecting the binector for fault trip 1 (F148).	Init: 0 Unit: - Indices: - Type: L2 ,B	Menus: - Parameter menu + Free blocks - Upread/free access Changeable in: - Drive setting - Ready
U062* Src Fault F149 2062	BICO parameter for selecting the binector for fault trip 2 (F149).	Init: 0 Unit: - Indices: - Type: L2 ,B	Menus: - Parameter menu + Free blocks - Upread/free access Changeable in: - Drive setting - Ready

Parameter	Description	Data	Read/write
U063* Src Fault F150 2063	BICO parameter for selecting the binector for fault trip 3 (F150).	Init: 0 Unit: - Indices: - Type: L2 ,B	Menus: - Parameter menu + Free blocks - Upread/free access Changeable in: - Drive setting - Ready
U064* Src Fault F151 2064	BICO parameter for selecting the binector for fault trip 4 (F151).	Init: 0 Unit: - Indices: - Type: L2 ,B	Menus: - Parameter menu + Free blocks - Upread/free access Changeable in: - Drive setting - Ready
U065* Src Warning A061 2065	BICO parameter for selecting the binector for warning trip 1 (A061).	Init: 0 Unit: - Indices: - Type: L2 ,B	Menus: - Parameter menu + Free blocks - Upread/free access Changeable in: - Drive setting - Ready
U066* Src Warning A062 2066	BICO parameter for selecting the binector for warning trip 2 (A062).	Init: 0 Unit: - Indices: - Type: L2 ,B	Menus: - Parameter menu + Free blocks - Upread/free access Changeable in: - Drive setting - Ready
U067* Src Warning A063 2067	BICO parameter for selecting the binector for warning trip 3 (A063).	Init: 0 Unit: - Indices: - Type: L2 ,B	Menus: - Parameter menu + Free blocks - Upread/free access Changeable in: - Drive setting - Ready
U068* Src Warning A064 2068	BICO parameter for selecting the binector for warning trip 4 (A064).	Init: 0 Unit: - Indices: - Type: L2 ,B	Menus: - Parameter menu + Free blocks - Upread/free access Changeable in: - Drive setting - Ready
n069 XERR PROFIdrive 2069	Parameter is only necessary for the parameter model of PROFIdrive V3 standard. Parameter is only visible if PROFIdrive V3 is set.	Dec.Plc.: 0 Unit: - Indices: - Type: X4	Menus: - Parameter menu - Upread/free access - Drive setting
U070* Src Conn/DConnC 2070	BICO parameter for selecting the connectors for the 3 connector/double-connector converter.	index1: 0 Unit: - Indices: 6 Type: L2 ,K	Menus: - Parameter menu + Free blocks - Upread/free access Changeable in: - Drive setting
U071* Src DConn/ConnC 2071	BICO parameter for selecting the connectors for the 3 double-connector/connector converters.	index1: 0 Unit: - Indices: 3 Type: L2 ,K ,K	Menus: - Parameter menu + Free blocks - Upread/free access Changeable in: - Drive setting

Parameter	Description	Data	Read/write
U072* Src Conn/BinC 2072	BICO parameter for selecting the connectors for the 3 connector/binector converters.	index1: 0 Unit: - Indices: 3 Type: L2 ,K	Menus: - Parameter menu + Free blocks - Upread/free access Changeable in: - Drive setting
n073 # Conn/BinC1 2073	Visualization parameter of connector/binector converter 1.	Dec.Plc.: 0 Unit: - Indices: - Type: V2	Menus: - Parameter menu + Free blocks - Upread/free access
n074 # Conn/BinC2 2074	Visualization parameter of connector/binector converter 2	Dec.Plc.: 0 Unit: - Indices: - Type: V2	Menus: - Parameter menu + Free blocks - Upread/free access
n075 # Conn/BinC3 2075	Visualization parameter of connector/binector converter 3	Dec.Plc.: 0 Unit: - Indices: - Type: V2	Menus: - Parameter menu + Free blocks - Upread/free access
U076* Src Bin/ConnC1 2076	BICO parameter for selecting the binectors for binector/connector converter 1.	index1: 0 Unit: - Indices: 16 Type: L2 ,B	Menus: - Parameter menu + Free blocks - Upread/free access Changeable in: - Drive setting
n077 #Bin/ConnC1 2077	Visualization parameter of binector/connector converter 1.	Dec.Plc.: 0 Unit: - Indices: - Type: V2	Menus: - Parameter menu + Free blocks - Upread/free access
U078* Src Bin/ConnC2 2078	BICO parameter for selecting the binectors for binector/connector converter 2.	index1: 0 Unit: - Indices: 16 Type: L2 ,B	Menus: - Parameter menu + Free blocks - Upread/free access Changeable in: - Drive setting
n079 # Bin/ConnC2 2079	Visualization parameter of binector/connector converter 2.	Dec.Plc.: 0 Unit: - Indices: - Type: V2	Menus: - Parameter menu + Free blocks - Upread/free access
U080* Src Bin/ConnC3 2080	BICO parameter for selecting the binectors for binector/connector converter 3.	index1: 0 Unit: - Indices: 16 Type: L2 ,B	Menus: - Parameter menu + Free blocks - Upread/free access Changeable in: - Drive setting
n081 # Bin/ConnC3 2081	Visualization parameter of binector/connector converter 3.	Dec.Plc.: 0 Unit: - Indices: - Type: V2	Menus: - Parameter menu + Free blocks - Upread/free access
U082* Src Conn Add 1 2082	BICO parameter for selecting the connectors for adder 1 (1 word).	index1: 0 Unit: - Indices: 2 Type: L2 ,K	Menus: - Parameter menu + Free blocks - Upread/free access Changeable in: - Drive setting
U083* Src Conn Add 2 2083	BICO parameter for selecting the connectors for adder 2 (1 word).	index1: 0 Unit: - Indices: 2 Type: L2 ,K	Menus: - Parameter menu + Free blocks - Upread/free access Changeable in: - Drive setting

Parameter	Description	Data	Read/write
U084* Src Conn Add 3 2084	BICO parameter for selecting the connectors for adder 3 (1 word).	index1: 0 Unit: - Indices: 2 Type: L2 ,K	Menus: - Parameter menu + Free blocks - Upread/free access Changeable in: - Drive setting
U085* Src Conn Add 4 2085	BICO parameter for selecting the connectors for adder 4 (1 word).	index1: 0 Unit: - Indices: 2 Type: L2 ,K	Menus: - Parameter menu + Free blocks - Upread/free access Changeable in: - Drive setting
U086* Src Conn Add 5 2086	BICO parameter for selecting the connectors for adder 5 with four inputs (1 word).	index1: 0 Unit: - Indices: 4 Type: L2 ,K	Menus: - Parameter menu + Free blocks - Upread/free access Changeable in: - Drive setting
U087* Src ConnSub1 2087	BICO parameter for selecting the connectors for subtracter 1 (1 word).	index1: 0 Unit: - Indices: 2 Type: L2 ,K	Menus: - Parameter menu + Free blocks - Upread/free access Changeable in: - Drive setting
U088* Src ConnSub2 2088	BICO parameter for selecting the connectors for subtracter 2 (1 word).	index1: 0 Unit: - Indices: 2 Type: L2 ,K	Menus: - Parameter menu + Free blocks - Upread/free access Changeable in: - Drive setting
U089* Src ConnSub3 2089	BICO parameter for selecting the connectors for subtracter 3 (1 word).	index1: 0 Unit: - Indices: 2 Type: L2 ,K	Menus: - Parameter menu + Free blocks - Upread/free access Changeable in: - Drive setting
U090* Src DConnAdd 1 2090	BICO parameter for selecting the connectors for adder 1 (2 word).	index1: 0 Unit: - Indices: 2 Type: L2 ,K ,K	Menus: - Parameter menu + Free blocks - Upread/free access Changeable in: - Drive setting
U091* Src DConnAdd 2 2091	BICO parameter for selecting the connectors for adder 2 (2 word).	index1: 0 Unit: - Indices: 2 Type: L2 ,K ,K	Menus: - Parameter menu + Free blocks - Upread/free access Changeable in: - Drive setting
U092* Src DConnAdd 3 2092	BICO parameter for selecting the connectors for adder 3 (2 word).	index1: 0 Unit: - Indices: 2 Type: L2 ,K ,K	Menus: - Parameter menu + Free blocks - Upread/free access Changeable in: - Drive setting
U093* Src DConnAdd 4 2093	BICO parameter for selecting the connectors for adder 4 (2 word).	index1: 0 Unit: - Indices: 2 Type: L2 ,K ,K	Menus: - Parameter menu + Free blocks - Upread/free access Changeable in: - Drive setting

Parameter	Description	Data	Read/write
U094* Src DConnSub1 2094	BICO parameter for selecting the connectors for subtracter 1 (2 word).	index1: 0 Unit: - Indices: 2 Type: L2 ,K ,K	Menus: - Parameter menu + Free blocks - Upread/free access Changeable in: - Drive setting
U095* Src DConnSub2 2095	BICO parameter for selecting the connectors for subtracter 2 (2 word).	index1: 0 Unit: - Indices: 2 Type: L2 ,K ,K	Menus: - Parameter menu + Free blocks - Upread/free access Changeable in: - Drive setting
U096* Src ConnM A/S 2096	BICO parameter for selecting the connectors for modulo 2^16 adder / subtracter.	index1: 0 Unit: - Indices: 3 Type: L2 ,K	Menus: - Parameter menu + Free blocks - Upread/free access Changeable in: - Drive setting
U097* Src DConnM A/S 2097	BICO parameter for selecting the connectors for modulo 2^32 adder / subtracter.	index1: 0 Unit: - Indices: 3 Type: L2 ,K ,K	Menus: - Parameter menu + Free blocks - Upread/free access Changeable in: - Drive setting
U098* Src Conn Inv1 2098	BICO parameter for selecting the connector for sign inverter 1 (1 word).	Init: 0 Unit: - Indices: - Type: L2 ,K	Menus: - Parameter menu + Free blocks - Upread/free access Changeable in: - Drive setting
U099* Src Conn Inv2 2099	BICO parameter for selecting the connector for sign inverter 2 (1 word).	Init: 0 Unit: - Indices: - Type: L2 ,K	Menus: - Parameter menu + Free blocks - Upread/free access Changeable in: - Drive setting
U100* Src Conn Inv3 2100	BICO parameter for selecting the connector for sign inverter 3 (1 word).	Init: 0 Unit: - Indices: - Type: L2 ,K	Menus: - Parameter menu + Free blocks - Upread/free access Changeable in: - Drive setting
U101* Src DConn Inv 1 2101	BICO parameter for selecting the connector for sign inverter 1 (2 word).	Init: 0 Unit: - Indices: - Type: L2 ,K ,K	Menus: - Parameter menu + Free blocks - Upread/free access Changeable in: - Drive setting
U102* Src DConn Inv 2 2102	BICO parameter for selecting the connector for sign inverter 2 (2 word).	Init: 0 Unit: - Indices: - Type: L2 ,K ,K	Menus: - Parameter menu + Free blocks - Upread/free access Changeable in: - Drive setting
U103* Src1 Conn SwInv 2103	BICO parameter for selecting the binector for the switchable sign inverter (1 word).	Init: 0 Unit: - Indices: - Type: L2 ,B	Menus: - Parameter menu + Free blocks - Upread/free access Changeable in: - Drive setting

Parameter	Description	Data	Read/write
U104* Src2 Conn SwInv 2104	BICO parameter for selecting the connector for the switchable sign inverter (1 word).	Init: 0 Unit: - Indices: - Type: L2 ,K	Menus: - Parameter menu + Free blocks - Upread/free access Changeable in: - Drive setting
U105* Src1 DConnSwInv 2105	BICO parameter for selecting the binector for the switchable sign inverter (2 word).	Init: 0 Unit: - Indices: - Type: L2 ,B	Menus: - Parameter menu + Free blocks - Upread/free access Changeable in: - Drive setting
U106* Src2 DConnSwInv 2106	BICO parameter for selecting the connector for the switchable sign inverter (2 word).	Init: 0 Unit: - Indices: - Type: L2 ,K ,K	Menus: - Parameter menu + Free blocks - Upread/free access Changeable in: - Drive setting
U107* Src Conn Mult1 2107	BICO parameter for selecting the connectors for multiplier 1 (1 word).	index1: 0 Unit: - Indices: 2 Type: L2 ,K	Menus: - Parameter menu + Free blocks - Upread/free access Changeable in: - Drive setting
U108* Src Conn Mult2 2108	BICO parameter for selecting the connectors for multiplier 2 (1 word).	index1: 0 Unit: - Indices: 2 Type: L2 ,K	Menus: - Parameter menu + Free blocks - Upread/free access Changeable in: - Drive setting
U109* Src Conn Mult3 2109	BICO parameter for selecting the connectors for multiplier 3 (1 word).	index1: 0 Unit: - Indices: 2 Type: L2 ,K	Menus: - Parameter menu + Free blocks - Upread/free access Changeable in: - Drive setting
U110* Src DConn Mult 2110	BICO parameter for selecting the connectors for multiplier 1 (2 word).	index1: 0 Unit: - Indices: 2 Type: L2 ,K ,K	Menus: - Parameter menu + Free blocks - Upread/free access Changeable in: - Drive setting
U111* Src Conn Div1 2111	BICO parameter for selecting the connectors for divider 1 (1 word).	index1: 0 Unit: - Indices: 2 Type: L2 ,K	Menus: - Parameter menu + Free blocks - Upread/free access Changeable in: - Drive setting
U112* Src Conn Div2 2112	BICO parameter for selecting the connectors for divider 2 (1 word).	index1: 0 Unit: - Indices: 2 Type: L2 ,K	Menus: - Parameter menu + Free blocks - Upread/free access Changeable in: - Drive setting
U113* SrcDConn Div 2113	BICO parameter for selecting the connectors for divider 1 (2 word).	index1: 0 Unit: - Indices: 2 Type: L2 ,K ,K	Menus: - Parameter menu + Free blocks - Upread/free access Changeable in: - Drive setting

Parameter	Description	Data	Read/write
U114* SrcConnMult/Div1 2114	BICO parameter for selecting the connectors for high-resolution multiplier/divider 1 (1 word).	index1: 0 Unit: - Indices: 3 Type: L2 ,K	Menus: - Parameter menu + Free blocks - Upread/free access Changeable in: - Drive setting
U115* SrcConnMult/Div2 2115	BICO parameter for selecting the connectors for high-resolution multiplier/divider 2 (1 word).	index1: 0 Unit: - Indices: 3 Type: L2 ,K	Menus: - Parameter menu + Free blocks - Upread/free access Changeable in: - Drive setting
U116* SrcConnMult/Div3 2116	BICO parameter for selecting the connectors for high-resolution multiplier/divider 3 (1 word).	index1: 0 Unit: - Indices: 3 Type: L2 ,K	Menus: - Parameter menu + Free blocks - Upread/free access Changeable in: - Drive setting
U117* Src ConnAbsV1 2117	BICO parameter for selecting the connector for the 1st absolute-value generator with smoothing (1 word).	Init: 0 Unit: - Indices: - Type: L2 ,K	Menus: - Parameter menu + Free blocks - Upread/free access Changeable in: - Drive setting
U118* Mode ConnAbsV1 2118	Function parameter for selecting the mode of the 1st absolute-value generator with smoothing (1 word).	Init: 0 Min: 0 Max: 3 Unit: - Indices: - Type: O2	Menus: - Parameter menu + Free blocks - Upread/free access Changeable in: - Drive setting
U119 SmoothConAbsV1 2119	Function parameter for entering the smoothing time constant of the 1st absolute-value generator with smoothing (1 word).	Init: 0 Min: 0 Max: 10000 Unit: ms Indices: - Type: O2	Menus: - Parameter menu + Free blocks - Upread/free access Changeable in: - Drive setting - Ready
U120* Src ConnAbsV2 2120	BICO parameter for selecting the connector for the 2nd absolute-value generator with smoothing (1 word).	Init: 0 Unit: - Indices: - Type: L2 ,K	Menus: - Parameter menu + Free blocks - Upread/free access Changeable in: - Drive setting
U121* Mode ConnAbsV2 2121	Function parameter for selecting the mode of the 2nd absolute-value generator with smoothing (1 word).	Init: 0 Min: 0 Max: 3 Unit: - Indices: - Type: O2	Menus: - Parameter menu + Free blocks - Upread/free access Changeable in: - Drive setting
U122 SmoothConAbsV2 2122	Function parameter for entering the smoothing time constants of the 2nd absolute-value generator with smoothing (1 word).	Init: 0 Min: 0 Max: 10000 Unit: ms Indices: - Type: O2	Menus: - Parameter menu + Free blocks - Upread/free access Changeable in: - Drive setting - Ready
U123* Src ConnAbsV3 2123	BICO parameter for selecting the connector for the 3rd absolute-value generator with smoothing (1 word).	Init: 0 Unit: - Indices: - Type: L2 ,K	Menus: - Parameter menu + Free blocks - Upread/free access Changeable in: - Drive setting

Parameter	Description	Data	Read/write
U124* Mode ConnAbsV3 2124	Function parameter for selecting the mode of the 3rd absolute-value generator (1 word).	Init: 0 Min: 0 Max: 3 Unit: - Indices: - Type: O2	Menus: - Parameter menu + Free blocks - Upread/free access Changeable in: - Drive setting
U125 SmoothConAbsV3 2125	Function parameter for entering the time constants of the 3rd absolute-value generator with smoothing (1 word).	Init: 0 Min: 0 Max: 10000 Unit: ms Indices: - Type: O2	Menus: - Parameter menu + Free blocks - Upread/free access Changeable in: - Drive setting - Ready
U126* SrcDConnAbsV 2126	BICO parameter for selecting the connector for the 1st absolute-value generator with smoothing (2 word).	Init: 0 Unit: - Indices: - Type: L2 ,K ,K	Menus: - Parameter menu + Free blocks - Upread/free access Changeable in: - Drive setting
U127* Mode DConnAbsV 2127	Function parameter for selecting the mode of the 1st absolute-value generator with smoothing (2 word).	Init: 0 Min: 0 Max: 3 Unit: - Indices: - Type: O2	Menus: - Parameter menu + Free blocks - Upread/free access Changeable in: - Drive setting
U128 SmoothDConnAbsV 2128	Function parameter for entering the smoothing time constants of the 1st absolute-value generator with smoothing (2 word).	Init: 0 Min: 0 Max: 10000 Unit: ms Indices: - Type: O2	Menus: - Parameter menu + Free blocks - Upread/free access Changeable in: - Drive setting - Ready
U129 FSetpConnLimitr1 2129	Function parameter for entering the fixed setpoint for limiter 1 (1 word).	index1: 100,00 Min: -200,00 Max: 200,00 Unit: % Indices: 4 ,FDS Type: I2	Menus: - Parameter menu + Free blocks - Upread/free access Changeable in: - Drive setting - Ready
U130* Src ConnLimitr1 2130	BICO parameter for selecting the connector for limiter 1 (1 word).	index1: 503 Unit: - Indices: 3 Type: L2 ,K	Menus: - Parameter menu + Free blocks - Upread/free access Changeable in: - Drive setting
U131 FSetpConnLimitr2 2131	Function parameter for entering the fixed setpoint for limiter 2 (1 word).	index1: 100,00 Min: -200,00 Max: 200,00 Unit: % Indices: 4 ,FDS Type: I2	Menus: - Parameter menu + Free blocks - Upread/free access Changeable in: - Drive setting - Ready
U132* Src ConnLimitr2 2132	BICO parameter for selecting the connector for limiter 2 (1 word).	index1: 506 Unit: - Indices: 3 Type: L2 ,K	Menus: - Parameter menu + Free blocks - Upread/free access Changeable in: - Drive setting

Parameter	Description	Data	Read/write
U133 FSetp DConnLmt 2133	Function parameter for entering the fixed setpoint for limiter 1 (2 word).	index1: 100,00 Min: -200,00 Max: 200,00 Unit: % Indices: 4 ,FDS Type: I4	Menus: - Parameter menu + Free blocks - Upread/free access Changeable in: - Drive setting - Ready
U134* SrcDConnLimitr 2134	BICO parameter for selecting the connector for limiter 1 (2 word).	index1: 509 Unit: - Indices: 3 Type: L2 ,K ,K	Menus: - Parameter menu + Free blocks - Upread/free access Changeable in: - Drive setting
U135 FSetpConnLmtMon1 2135	Function parameter for entering the fixed setpoint for the 1st limit-value monitor with smoothing (1 word).	Init: 0,00 Min: -200,00 Max: 200,00 Unit: % Indices: - Type: I2	Menus: - Parameter menu + Free blocks - Upread/free access Changeable in: - Drive setting - Ready
U136* SrcConnLmtMon1 2136	BICO parameter for selecting the connector for the 1st limit-value monitor with smoothing (1 word).	index1: 0 Unit: - Indices: 2 Type: L2 ,K	Menus: - Parameter menu + Free blocks - Upread/free access Changeable in: - Drive setting
U137 SmConnLmtMon1 2137	Function parameter for entering the smoothing time constants of the 1st limit-value monitor with smoothing (1 word).	Init: 0 Min: 0 Max: 10000 Unit: ms Indices: - Type: O2	Menus: - Parameter menu + Free blocks - Upread/free access Changeable in: - Drive setting - Ready
U138 HysConnLmtMon1 2138	Function parameter for entering the hysteresis of the 1st limit-value monitor with smoothing (1 word).	Init: 0,00 Min: 0,00 Max: 199,99 Unit: % Indices: - Type: O2	Menus: - Parameter menu + Free blocks - Upread/free access Changeable in: - Drive setting - Ready
U139* ModeConnLmtMon1 2139	Function parameters for entering the mode of the 1st limit-value monitors with smoothing (1 word).	Init: 0 Min: 0 Max: 2 Unit: - Indices: - Type: O2	Menus: - Parameter menu + Free blocks - Upread/free access Changeable in: - Drive setting
U140 FSetpConnLmtMon1 2140	Function parameter for entering the fixed setpoint for the 2nd limit-value monitor with smoothing (1 word).	Init: 0,00 Min: -200,00 Max: 200,00 Unit: % Indices: - Type: I2	Menus: - Parameter menu + Free blocks - Upread/free access Changeable in: - Drive setting - Ready
U141* SrcConnLmtMon2 2141	BICO parameter for selecting the connector for the 2nd limit-value monitor with smoothing (1 word).	index1: 0 Unit: - Indices: 2 Type: L2 ,K	Menus: - Parameter menu + Free blocks - Upread/free access Changeable in: - Drive setting

Parameter	Description	Data	Read/write
U142 SmConnLmtMon 2 2142	Function parameter for entering the smoothing time constants of the 2nd limit-value monitors with smoothing (1 word).	Init: 0 Min: 0 Max: 10000 Unit: ms Indices: - Type: O2	Menus: - Parameter menu + Free blocks - Upread/free access Changeable in: - Drive setting - Ready
U143 HysConnLmtMon2 2143	Function parameter for entering the hysteresis of the 2nd limit-value monitors with smoothing (1 word).	Init: 0,00 Min: 0,00 Max: 199,99 Unit: % Indices: - Type: O2	Menus: - Parameter menu + Free blocks - Upread/free access Changeable in: - Drive setting - Ready
U144* ModeConnLmtMon2 2144	Function parameter for entering the mode of the 2nd limit-value monitors with smoothing (1 word).	Init: 0 Min: 0 Max: 2 Unit: - Indices: - Type: O2	Menus: - Parameter menu + Free blocks - Upread/free access Changeable in: - Drive setting
U145 FSDConnLmtMon1 2145	Function parameter for entering the fixed setpoint for the 1st limit-value monitor with smoothing (2 word).	Init: 0,00 Min: -200,00 Max: 200,00 Unit: % Indices: - Type: I4	Menus: - Parameter menu + Free blocks - Upread/free access Changeable in: - Drive setting - Ready
U146* SrcDConnLmtMon1 2146	BICO parameter for selecting the connector for the 1st limit-value monitor with smoothing (2 word).	index1: 0 Unit: - Indices: 2 Type: L2 ,K ,K	Menus: - Parameter menu + Free blocks - Upread/free access Changeable in: - Drive setting
U147 HysLmtMon3 2147	Function parameter for entering the smooothing time constants of the 1st limit-value monitor with smoothing (2 word).	Init: 0 Min: 0 Max: 10000 Unit: ms Indices: - Type: O2	Menus: - Parameter menu + Free blocks - Upread/free access Changeable in: - Drive setting - Ready
U148 HysDConnLmtMon1 2148	Function parameter for entering the hysteresis of the 1st limit-value monitor with smoothing (2 word).	Init: 0,00 Min: 0,00 Max: 199,99 Unit: % Indices: - Type: O4	Menus: - Parameter menu + Free blocks - Upread/free access Changeable in: - Drive setting - Ready
U149* ModeDConnLmtMon 1 2149	Function parameter for entering the mode of the 1st limit-value monitors with smoothing (2 word).	Init: 0 Min: 0 Max: 2 Unit: - Indices: - Type: O2	Menus: - Parameter menu + Free blocks - Upread/free access Changeable in: - Drive setting
U150 FSDConnLmtMon2 2150	Function parameter for entering the fixed setpoint for the 2nd limit-value monitor without smoothing (2 word).	Init: 0,00 Min: -200,00 Max: 200,00 Unit: % Indices: - Type: I4	Menus: - Parameter menu + Free blocks - Upread/free access Changeable in: - Drive setting - Ready

Parameter	Description	Data	Read/write
U151* SrcDConnLmtMon2 2151	BICO parameter for selecting the connector for the 2nd limit-value monitor without smoothing (2 word).	index1: 0 Unit: - Indices: 2 Type: L2 ,K ,K	Menus: - Parameter menu + Free blocks - Upread/free access Changeable in: - Drive setting
U152 HysDConnLmtMon2 2152	Function parameter for entering the hysteresis of the 2nd limit-value monitor without smoothing (2 word).	Init: 0,00 Min: 0,00 Max: 199,99 Unit: % Indices: - Type: O4	Menus: - Parameter menu + Free blocks - Upread/free access Changeable in: - Drive setting - Ready
U153* ModeDConnLmtMon 2 2153	Function parameters for entering the mode of the 2nd limit-value monitor without smoothing (2 word).	Init: 0 Min: 0 Max: 2 Unit: - Indices: - Type: O2	Menus: - Parameter menu + Free blocks - Upread/free access Changeable in: - Drive setting
U154* Src Cam 1/2 2154	BICO parameter for selecting the connector for the cam controller with cam 1 and cam 2.	Init: 0 Unit: - Indices: - Type: L2 ,K ,K	Menus: - Parameter menu + Free blocks - Upread/free access Changeable in: - Drive setting
U155 Hys Cam 1/2 2155	Function parameter for entering the hysteresis of the cam controller with cam 1 and cam 2.	Init: 0 Min: 0 Max: 2147483647 Unit: - Indices: - Type: O4	Menus: - Parameter menu + Free blocks - Upread/free access Changeable in: - Drive setting - Ready
U156 ON-Pos Cam1 2156	Function parameter for entering the ON-position of cam 1. The value of the ON position must be smaller than that of the OFF position.	index1: 0 Min: -2147483647 Max: 2147483647 Unit: - Indices: 4 ,FDS Type: I4	Menus: - Parameter menu + Free blocks - Upread/free access Changeable in: - Drive setting - Ready
U157 OFF-Pos Cam1 2157	Function parameter for entering the OFF-position of cam 1.	index1: 0 Min: -2147483647 Max: 2147483647 Unit: - Indices: 4 ,FDS Type: I4	Menus: - Parameter menu + Free blocks - Upread/free access Changeable in: - Drive setting - Ready
U158 ON-Pos Cam2 2158	Function parameter for entering the ON-Position of cam 2.	index1: 0 Min: -2147483647 Max: 2147483647 Unit: - Indices: 4 ,FDS Type: I4	Menus: - Parameter menu + Free blocks - Upread/free access Changeable in: - Drive setting - Ready

Parameter	Description	Data	Read/write
U159 OFF-Pos Cam2 2159	Function parameter for entering the OFF-position of cam 2.	index1: 0 Min: -2147483647 Max: 2147483647 Unit: - Indices: 4 ,FDS Type: I4	Menus: - Parameter menu + Free blocks - Upread/free access Changeable in: - Drive setting - Ready
U160* Src Cam 3/4 2160	BICO parameter for selecting the connector for the cam controller with cam 3 and cam 4.	Init: 0 Unit: - Indices: - Type: L2 ,K ,K	Menus: - Parameter menu + Free blocks - Upread/free access Changeable in: - Drive setting
U161 Hys Cam 3/4 2161	Function parameter for entering the hysteresis of the cam controller with cam 3 and cam 4.	Init: 0 Min: 0 Max: 2147483647 Unit: - Indices: - Type: O4	Menus: - Parameter menu + Free blocks - Upread/free access Changeable in: - Drive setting - Ready
U162 ON-Pos Cam3 2162	Function parameter for entering the ON-position of cam 3.	index1: 0 Min: -2147483647 Max: 2147483647 Unit: - Indices: 4 ,FDS Type: I4	Menus: - Parameter menu + Free blocks - Upread/free access Changeable in: - Drive setting - Ready
U163 OFF-Pos Cam3 2163	Function parameter for entering the OFF-position of cam 3.	index1: 0 Min: -2147483647 Max: 2147483647 Unit: - Indices: 4 ,FDS Type: I4	Menus: - Parameter menu + Free blocks - Upread/free access Changeable in: - Drive setting - Ready
U164 ON-Pos Cam4 2164	Function parameters for entering the ON-position of cam 4.	index1: 0 Min: -2147483647 Max: 2147483647 Unit: - Indices: 4 ,FDS Type: I4	Menus: - Parameter menu + Free blocks - Upread/free access Changeable in: - Drive setting - Ready
U165 OFF-Pos Cam4 2165	Function parameters for entering the OFF-position of cam 4.	index1: 0 Min: -2147483647 Max: 2147483647 Unit: - Indices: 4 ,FDS Type: I4	Menus: - Parameter menu + Free blocks - Upread/free access Changeable in: - Drive setting - Ready

Parameter	Description	Data	Read/write
U166* Src1 ConnCh1 2166	BICO parameter for selecting the binector for the analog-signal changeover switch 1 (1 word).	Init: 0 Unit: - Indices: - Type: L2 ,B	Menus: - Parameter menu + Free blocks - Upread/free access Changeable in: - Drive setting
U167* Src2 ConnCh1 2167	BICO parameter for selecting the connectors for analog-signal changeover switch 1 (1 word).	index1: 0 Unit: - Indices: 2 Type: L2 ,K	Menus: - Parameter menu + Free blocks - Upread/free access Changeable in: - Drive setting
U168* Src1 ConnCh2 2168	BICO parameter for selecting the binector for analog-signal changeover switch 2 (1 word).	Init: 0 Unit: - Indices: - Type: L2 ,B	Menus: - Parameter menu + Free blocks - Upread/free access Changeable in: - Drive setting
U169* Src2 ConnCh2 2169	BICO parameter for selecting the connectors for analog-signal changeover switch 2 (1 word).	index1: 0 Unit: - Indices: 2 Type: L2 ,K	Menus: - Parameter menu + Free blocks - Upread/free access Changeable in: - Drive setting
U170* Src1 ConnCh3 2170	BICO parameter for selecting the binector for analog-signal changeover switch 3 (1 word).	Init: 0 Unit: - Indices: - Type: L2 ,B	Menus: - Parameter menu + Free blocks - Upread/free access Changeable in: - Drive setting
U171* Src2 ConnCh3 2171	BICO parameter for selecting the connectors for analog-signal changeover switch 3 (1 word).	index1: 0 Unit: - Indices: 2 Type: L2 ,K	Menus: - Parameter menu + Free blocks - Upread/free access Changeable in: - Drive setting
U172* Src1 ConnCh4 2172	BICO parameter for selecting the binector for analog-signal changeover switch 4 (1 word).	Init: 0 Unit: - Indices: - Type: L2 ,B	Menus: - Parameter menu + Free blocks - Upread/free access Changeable in: - Drive setting
U173* Src2 ConnCh4 2173	BICO parameter for selecting the connectors for analog-signal changeover switch 4 (1 word).	index1: 0 Unit: - Indices: 2 Type: L2 ,K	Menus: - Parameter menu + Free blocks - Upread/free access Changeable in: - Drive setting
U174* Src1 ConnCh5 2174	BICO parameter for selecting the binector for analog-signal changeover switch 5 (1 word).	Init: 0 Unit: - Indices: - Type: L2 ,B	Menus: - Parameter menu + Free blocks - Upread/free access Changeable in: - Drive setting
U175* Src2 ConnCh5 2175	BICO parameter for selecting the connectors for analog-signal changeover switch 5 (1 word).	index1: 0 Unit: - Indices: 2 Type: L2 ,K	Menus: - Parameter menu + Free blocks - Upread/free access Changeable in: - Drive setting

Parameter	Description	Data	Read/write
U176* Src1DconnCh1 2176	BICO parameter for selecting the binector for analog-signal changeover switch 1 (2 word).	Init: 0 Unit: - Indices: - Type: L2 ,B	Menus: - Parameter menu + Free blocks - Upread/free access Changeable in: - Drive setting
U177* Src2DConnCh1 2177	BICO parameter for selecting the connectors for analog-signal changeover switch 1 (2 word).	index1: 0 Unit: - Indices: 2 Type: L2 ,K ,K	Menus: - Parameter menu + Free blocks + Technology + Positioning - Upread/free access Changeable in: - Drive setting
U178* Src1DConnCh2 2178	BICO parameter for selecting the binector for analog-signal changeover switch 2 (2 word).	Init: 0 Unit: - Indices: - Type: L2 ,B	Menus: - Parameter menu + Free blocks - Upread/free access Changeable in: - Drive setting
U179* Src2DConnCh2 2179	BICO parameter for selecting the connectors for analog-signal changeover switch 2 (2 word).	index1: 0 Unit: - Indices: 2 Type: L2 ,K ,K	Menus: - Parameter menu + Free blocks - Upread/free access Changeable in: - Drive setting
U180* Src1DConnCh3 2180	BICO parameter for selecting the binector for analog-signal changeover switch 3 (2 word).	Init: 0 Unit: - Indices: - Type: L2 ,B	Menus: - Parameter menu + Free blocks - Upread/free access Changeable in: - Drive setting
U181* Src2DConnCh3 2181	BICO parameter for selecting the connectors for analog-signal changeover switch 3 (2 word).	index1: 0 Unit: - Indices: 2 Type: L2 ,K ,K	Menus: - Parameter menu + Free blocks - Upread/free access Changeable in: - Drive setting
U182* Src1DConnCh4 2182	BICO parameter for selecting the binector for analog-signal changeover switch 4 (2 word).	Init: Unit: - Indices: - Type: L2 ,B	Menus: - Parameter menu + Free blocks - Upread/free access Changeable in: - Drive setting
U183* Src2DConnCh4 2183	BICO parameter for selecting the connectors for analog-signal changeover switch 4 (2 word).	index1: 0 Unit: - Indices: 2 Type: L2 ,K ,K	Menus: - Parameter menu + Free blocks - Upread/free access Changeable in: - Drive setting
U184* Src1DConnCh5 2184	BICO parameter for selecting the binector for analog-signal changeover switch 5 (2 word).	Init: 0 Unit: - Indices: - Type: L2 ,B	Menus: - Parameter menu + Free blocks - Upread/free access Changeable in: - Drive setting
U185* Src2DConnCh5 2185	BICO parameter for selecting the connectors for analog-signal changeover switch 5 (2 word).	index1: 0 Unit: - Indices: 2 Type: L2 ,K ,K	Menus: - Parameter menu + Free blocks - Upread/free access Changeable in: - Drive setting

Parameter	Description	Data	Read/write
U186* Src1 Multiplex 2186	Source for the binectors of the multiplexer with 8 channels: Index 1 : Signal selection Bit 0 Index 2 : Signal selection Bit 1 Index 3 : Signal selection Bit 2 Index 4 : Enable signal selection	index1: 0 Unit: - Indices: 4 Type: L2 ,B	Menus: - Parameter menu + Free blocks - Upread/free access Changeable in: - Drive setting
U187* Src 2 Multiplex 2187	The parameter defines the connector inputs of the multiplexer with 8 channels: Index 1 : Input 1 to Index 8 : Input 8	index1: 0 Unit: - Indices: 8 Type: L2 ,K ,K	Menus: - Parameter menu + Free blocks - Upread/free access Changeable in: - Drive setting
U188* Src1 Demultiplex 2188	BICO for selecting the binectors for the demultiplexer with 8 channels (2 word).	index1: 0 Unit: - Indices: 5 Type: L2 ,B	Menus: - Parameter menu + Free blocks - Upread/free access Changeable in: - Drive setting
U189* Src2 Demultiplex 2189	BICO parameter for selecting the connectors for the demultiplexer with 8 channels (2 word).	Init: 0 Unit: - Indices: - Type: L2 ,K ,K	Menus: - Parameter menu + Free blocks - Upread/free access Changeable in: - Drive setting
U190* Src Char1 2190	BICO parameter for selecting the connectors for characteristic block 1 (1 word).	Init: 0 Unit: - Indices: - Type: L2 ,K	Menus: - Parameter menu + Free blocks - Upread/free access Changeable in: - Drive setting
U191 X-Vals Char1 2191	Function parameters for entering the X-values for characteristic block 1 (1 word).	index1: 0,00 Min: -200,00 Max: 200,00 Unit: % Indices: 10 Type: I2	Menus: - Parameter menu + Free blocks - Upread/free access Changeable in: - Drive setting - Ready
U192 Y-Vals Char1 2192	Function parameters for entering the Y-values for characteristic block 1 (1 word).	index1: 0,00 Min: -200,00 Max: 200,00 Unit: % Indices: 10 Type: I2	Menus: - Parameter menu + Free blocks - Upread/free access Changeable in: - Drive setting - Ready
U193* Src Char2 2193	BICO parameter for selecting the connectors for characteristic block 2 (1 word).	Init: 0 Unit: - Indices: - Type: L2 ,K	Menus: - Parameter menu + Free blocks - Upread/free access Changeable in: - Drive setting
U194 X-Vals Char2 2194	Function parameters for entering the X-values for characteristic block 2 (1 word).	index1: 0,00 Min: -200,00 Max: 200,00 Unit: % Indices: 10 Type: I2	Menus: - Parameter menu + Free blocks - Upread/free access Changeable in: - Drive setting - Ready

Parameter	Description	Data	Read/write
U195 Y-Vals Char2 2195	Function parameters for entering the Y-values for characteristic block 2 (1 word).	index1: 0,00 Min: -200,00 Max: 200,00 Unit: % Indices: 10 Type: I2	Menus: - Parameter menu + Free blocks - Upread/free access Changeable in: - Drive setting - Ready
U196* Src Char3 2196	BICO parameter for selecting the connectors for the characteristic block 3 (1 word).	Init: 0 Unit: - Indices: - Type: L2 ,K	Menus: - Parameter menu + Free blocks - Upread/free access Changeable in: - Drive setting
U197 X-Vals Char3 2197	Function parameters for entering the X-values for characteristic block 2 (1 word).	index1: 0,00 Min: -200,00 Max: 200,00 Unit: % Indices: 10 Type: I2	Menus: - Parameter menu + Free blocks - Upread/free access Changeable in: - Drive setting - Ready
U198 Y-Vals Char3 2198	Function parameters for entering the Y-values for characteristic block 3 (1 word).	index1: 0,00 Min: -200,00 Max: 200,00 Unit: % Indices: 10 Type: I2	Menus: - Parameter menu + Free blocks - Upread/free access Changeable in: - Drive setting - Ready
U199* Src DeadZone 2199	BICO parameter for selecting the connectors for the dead zone (1 word).	Init: 0 Unit: - Indices: - Type: L2 ,K	Menus: - Parameter menu + Free blocks - Upread/free access Changeable in: - Drive setting
U200 Neutral Zone 2200	Function parameter for entering the neutral zone for the dead zone (1 word).	Init: 0,00 Min: 0,00 Max: 100,00 Unit: % Indices: - Type: O2	Menus: - Parameter menu + Free blocks - Upread/free access Changeable in: - Drive setting - Ready
U201* SrcMaxSel 2201	BICO parameter for selecting the connectors for maximum selection (2 word).	index1: 0 Unit: - Indices: 3 Type: L2 ,K ,K	Menus: - Parameter menu + Free blocks - Upread/free access Changeable in: - Drive setting
U202* SrcMinSel 2202	BICO parameter for selecting the connectors for minimum selection (2 word).	index1: 0 Unit: - Indices: 3 Type: L2 ,K ,K	Menus: - Parameter menu + Free blocks - Upread/free access Changeable in: - Drive setting
U203* Src1 Tra/Stor1 2203	BICO parameter for selecting the binectors for the control inputs of the tracking/storage element. Index 1: Track Index 2: Store Index 3: Reset	index1: 0 Unit: - Indices: 3 Type: L2 ,B	Menus: - Parameter menu + Free blocks - Upread/free access Changeable in: - Drive setting

Parameter	Description	Data	Read/write
U204* Src2 Tra/Stor1 2204	BICO parameter for selecting the connector for tracking/storage element 1 (2 word).	Init: 0 Unit: - Indices: - Type: L2 ,K ,K	Menus: - Parameter menu + Free blocks - Upread/free access Changeable in: - Drive setting
U205* Mode Tra/Stor1 2205	Function parameter for selecting the mode of the tracking/storage element (2 word). Parameter value 0 = non-volatile memory off 1 = non-volatile memory on	Init: 0 Min: 0 Max: 1 Unit: - Indices: - Type: O2	Menus: - Parameter menu + Free blocks - Upread/free access Changeable in: - Drive setting
U206* Src1 Tra/Stor2 2206	BICO parameter for selecting the binectors for the control inputs of the tracking/storage element. Index 1: Track Index 2: Store Index 3: Reset	index1: 0 Unit: - Indices: 3 Type: L2 ,B	Menus: - Parameter menu + Free blocks - Upread/free access Changeable in: - Drive setting
U207* Src2 Tra/Stor2 2207	BICO parameter for selecting the connectors for tracking/storage element 2 (2 word).	Init: 0 Unit: - Indices: - Type: L2 ,K ,K	Menus: - Parameter menu + Free blocks - Upread/free access Changeable in: - Drive setting
U208* Mode Tra/Stor2 2208	Function parameter for selecting the mode of the tracking/storage element (2 word). Parameter value 0 = non-volatile memory off 1 = non-volatile memory on	Init: 0 Min: 0 Max: 1 Unit: - Indices: - Type: O2	Menus: - Parameter menu + Free blocks - Upread/free access Changeable in: - Drive setting
U209* Src1 Store 1 2209	BICO parameter for selecting the connectors for analog-signal storage 1 (2 word).	Init: 0 Unit: - Indices: - Type: L2 ,K ,K	Menus: - Parameter menu + Free blocks - Upread/free access Changeable in: - Drive setting
U210* Src2 Store 1 2210	BICO parameter for selecting the binector for analog-signal storage 1 (2 word).	Init: 0 Unit: - Indices: - Type: L2 ,B	Menus: - Parameter menu + Free blocks - Upread/free access Changeable in: - Drive setting
U211* Src1 Store 2 2211	BICO parameter for selecting the connectors for analog-signal storage 2 (2 word).	Init: 0 Unit: - Indices: - Type: L2 ,K ,K	Menus: - Parameter menu + Free blocks - Upread/free access Changeable in: - Drive setting
U212* Src2 Store 2 2212	BICO parameter for selecting the binector for analog-signal storage 2 (2 word).	Init: 0 Unit: - Indices: - Type: L2 ,B	Menus: - Parameter menu + Free blocks - Upread/free access Changeable in: - Drive setting
U214* Src n(FrictChar) 2214	BICO parameter for selecting the connector from which the speed actual-value for the friction characteristic is to be read in.	index1: 0 Unit: - Indices: 2 ,BDS Type: L2 ,K ,K	Menus: - Parameter menu + Functions - Upread/free access Changeable in: - Drive setting

Parameter	Description	Data	Read/write
U215* n-FrictChar 2215	Parameter for indicating the speed support points (in %) of the friction characteristic. Only positive values are acceptable.	index1: 1,000 Min: 0,000 Max: 200,000 Unit: % Indices: 10 Type: I4	Menus: - Parameter menu + Functions - Upread/free access Changeable in: - Drive setting
U216* T FrictChar 2216	Function parameter for entering the supplementary torque values of the friction characteristic. Are automatically set upon recording of the friction characteristic.	index1: 0,0 Min: 0,0 Max: 200,0 Unit: % Indices: 10 Type: I2	Menus: - Parameter menu + Functions - Upread/free access Changeable in: - Drive setting
U217* Weight T Char 2217	Weighting factor (in %) for the torque supplementary value determined by the friction characteristic.	index1: 100,0 Min: 0,0 Max: 200,0 Unit: % Indices: 4 ,FDS Type: O2	Menus: - Parameter menu + Functions - Upread/free access Changeable in: - Drive setting
U218* Src FricCharON 2218	BICO parameter for selecting a binector for activating the friction characteristic.	index1: 0 Unit: - Indices: 2 ,BDS Type: L2 ,B	Menus: - Parameter menu + Functions - Upread/free access Changeable in: - Drive setting
U219* SrcPlotFricChar 2219	BICO parameter for selecting a binector with which recording of the friction characteristic can be triggered.	index1: 0 Unit: - Indices: 2 ,BDS Type: L2 ,B	Menus: - Parameter menu - Upread/free access Changeable in: - Drive setting
U221* Src AND1 2221	BICO parameter for selecting the binectors for AND element 1 (Output = B601).	index1: 1 Unit: - Indices: 3 Type: L2 ,B	Menus: - Parameter menu + Free blocks - Upread/free access Changeable in: - Drive setting
U222* Src AND2 2222	BICO parameter for selecting the binectors for AND element 2 (Output = B602).	index1: 1 Unit: - Indices: 3 Type: L2 ,B	Menus: - Parameter menu + Free blocks - Upread/free access Changeable in: - Drive setting
U223* Src AND3 2223	BICO parameter for selecting the binectors for AND element 3 (Output = B603).	index1: 1 Unit: - Indices: 3 Type: L2 ,B	Menus: - Parameter menu + Free blocks - Upread/free access Changeable in: - Drive setting
U224* Src AND4 2224	BICO parameter for selecting the binectors for AND element 4 (Output = B604).	index1: 1 Unit: - Indices: 3 Type: L2 ,B	Menus: - Parameter menu + Free blocks - Upread/free access Changeable in: - Drive setting
U225* Src AND5 2225	BICO parameter for selecting the binectors for AND element 5 (Output = B605).	index1: 1 Unit: - Indices: 3 Type: L2 ,B	Menus: - Parameter menu + Free blocks - Upread/free access Changeable in: - Drive setting

Parameter	Description	Data	Read/write
U226* Src AND6 2226	BICO parameter for selecting the binectors for AND element 6 (Output = B606).	index1: 1 Unit: - Indices: 3 Type: L2 ,B	Menus: - Parameter menu + Free blocks - Upread/free access Changeable in: - Drive setting
U227* Src AND7 2227	BICO parameter for selecting the binectors for AND element 7 (Output = B607).	index1: 1 Unit: - Indices: 3 Type: L2 ,B	Menus: - Parameter menu + Free blocks - Upread/free access Changeable in: - Drive setting
U228* Src AND8 2228	BICO parameter for selecting the binectors for AND element 8 (Output = B608).	index1: 1 Unit: - Indices: 3 Type: L2 ,B	Menus: - Parameter menu + Free blocks - Upread/free access Changeable in: - Drive setting
U229* Src AND9 2229	BICO parameter for selecting the binectors for AND element 9 (Output = B609).	index1: 1 Unit: - Indices: 3 Type: L2 ,B	Menus: - Parameter menu + Free blocks - Upread/free access Changeable in: - Drive setting
U230* Src AND10 2230	BICO parameter for selecting the binectors for AND element 10 (Output = B610).	index1: 1 Unit: - Indices: 3 Type: L2 ,B	Menus: - Parameter menu + Free blocks - Upread/free access Changeable in: - Drive setting
U231* Src AND11 2231	BICO parameter for selecting the binectors for AND element 11 (Output = B611).	index1: 1 Unit: - Indices: 3 Type: L2 ,B	Menus: - Parameter menu + Free blocks - Upread/free access Changeable in: - Drive setting
U232* Src AND12 2232	BICO parameter for selecting the binectors for AND element 12 (Output = B612).	index1: 1 Unit: - Indices: 3 Type: L2 ,B	Menus: - Parameter menu + Free blocks - Upread/free access Changeable in: - Drive setting
U233* Src AND13 2233	BICO parameter for selecting the binectors for AND element 13 (Output = B613).	index1: 1 Unit: - Indices: 3 Type: L2 ,B	Menus: - Parameter menu + Free blocks - Upread/free access Changeable in: - Drive setting
U234* Src AND14 2234	BICO parameter for selecting the binectors for AND element 14 (Output = B614).	index1: 1 Unit: - Indices: 3 Type: L2 ,B	Menus: - Parameter menu + Free blocks - Upread/free access Changeable in: - Drive setting
U235* Src AND15 2235	BICO parameter for selecting the binectors for AND element 15 (Output = B615).	index1: 1 Unit: - Indices: 3 Type: L2 ,B	Menus: - Parameter menu + Free blocks - Upread/free access Changeable in: - Drive setting

Parameter	Description	Data	Read/write
U236* Src AND16 2236	BICO parameter for selecting the binectors for AND element 16 (Output = B616).	index1: 1 Unit: - Indices: 3 Type: L2 ,B	Menus: - Parameter menu + Free blocks - Upread/free access Changeable in: - Drive setting
U237* Src AND17 2237	BICO parameter for selecting the binectors for AND element 17 (Output = B617).	index1: 1 Unit: - Indices: 3 Type: L2 ,B	Menus: - Parameter menu + Free blocks - Upread/free access Changeable in: - Drive setting
U238* Src AND18 2238	BICO parameter for selecting the binectors for AND element 18 (Output = B618).	index1: 1 Unit: - Indices: 3 Type: L2 ,B	Menus: - Parameter menu + Free blocks - Upread/free access Changeable in: - Drive setting
U239* Src OR1 2239	BICO parameter for selecting the binectors for OR element 1 (Output = B619).	index1: 0 Unit: - Indices: 3 Type: L2 ,B	Menus: - Parameter menu + Free blocks - Upread/free access Changeable in: - Drive setting
U240* Src OR2 2240	BICO parameter for selecting the binectors for OR element 2 (Output = B620).	index1: 0 Unit: - Indices: 3 Type: L2 ,B	Menus: - Parameter menu + Free blocks - Upread/free access Changeable in: - Drive setting
U241* Src OR3 2241	BICO parameter for selecting the binectors for OR element 3 (Output = B621).	index1: 0 Unit: - Indices: 3 Type: L2 ,B	Menus: - Parameter menu + Free blocks - Upread/free access Changeable in: - Drive setting
U242* Src OR4 2242	BICO parameter for selecting the binectors for OR element 4 (Output = B622).	index1: 0 Unit: - Indices: 3 Type: L2 ,B	Menus: - Parameter menu + Free blocks - Upread/free access Changeable in: - Drive setting
U243* Src OR5 2243	BICO parameter for selecting the binectors for OR element 5 (Output = B623).	index1: 0 Unit: - Indices: 3 Type: L2 ,B	Menus: - Parameter menu + Free blocks - Upread/free access Changeable in: - Drive setting
U244* Src OR6 2244	BICO parameter for selecting the binectors for OR element 6 (Output = B624).	index1: 0 Unit: - Indices: 3 Type: L2 ,B	Menus: - Parameter menu + Free blocks - Upread/free access Changeable in: - Drive setting
U245* Src OR7 2245	BICO parameter for selecting the binectors for OR element 7 (Output = B625).	index1: 0 Unit: - Indices: 3 Type: L2 ,B	Menus: - Parameter menu + Free blocks - Upread/free access Changeable in: - Drive setting

Parameter	Description	Data	Read/write
U246* Src OR8 2246	BICO parameter for selecting the binectors for OR element 8 (Output = B626).	index1: 0 Unit: - Indices: 3 Type: L2 ,B	Menus: - Parameter menu + Free blocks - Upread/free access Changeable in: - Drive setting
U247* Src OR9 2247	BICO parameter for selecting the binectors for OR element 9 (Output = B627).	index1: 0 Unit: - Indices: 3 Type: L2 ,B	Menus: - Parameter menu + Free blocks - Upread/free access Changeable in: - Drive setting
U248* Src OR10 2248	BICO parameter for selecting the binectors for OR element 10 (Output = B628).	index1: 0 Unit: - Indices: 3 Type: L2 ,B	Menus: - Parameter menu + Free blocks - Upread/free access Changeable in: - Drive setting
U249* Src OR11 2249	BICO parameter for selecting the binectors for OR element 11 (Output = B629).	index1: 0 Unit: - Indices: 3 Type: L2 ,B	Menus: - Parameter menu + Free blocks - Upread/free access Changeable in: - Drive setting
U250* Src OR12 2250	BICO parameter for selecting the binectors for OR element 12 (Output = B630).	index1: 0 Unit: - Indices: 3 Type: L2 ,B	Menus: - Parameter menu + Free blocks - Upread/free access Changeable in: - Drive setting
U251* Src BinInv1 2251	BICO parameter for selecting the binector for inverter 1 (Output = B641).	Init: 0 Unit: - Indices: - Type: L2 ,B	Menus: - Parameter menu + Free blocks - Upread/free access Changeable in: - Drive setting
U252* Src BinInv2 2252	BICO parameter for selecting the binector for inverter 2 (Output = B642).	Init: 0 Unit: - Indices: - Type: L2 ,B	Menus: - Parameter menu + Free blocks - Upread/free access Changeable in: - Drive setting
U253* Src BinInv3 2253	BICO parameter for selecting the binector for inverter 3 (Output = B643).	Init: 0 Unit: - Indices: - Type: L2 ,B	Menus: - Parameter menu + Free blocks - Upread/free access Changeable in: - Drive setting
U254* Src BinInv4 2254	BICO parameter for selecting the binector for inverter 4 (Output = B644).	Init: 0 Unit: - Indices: - Type: L2 ,B	Menus: - Parameter menu + Free blocks - Upread/free access Changeable in: - Drive setting
U255* Src BinInv5 2255	BICO parameter for selecting the binector for inverter 5 (Output = B645).	Init: 0 Unit: - Indices: - Type: L2 ,B	Menus: - Parameter menu + Free blocks - Upread/free access Changeable in: - Drive setting

Parameter	Description	Data	Read/write
U256* Src BinInv6 2256	BICO parameter for selecting the binector for inverter 6 (Output = B646).	Init: 0 Unit: - Indices: - Type: L2 ,B	Menus: - Parameter menu + Free blocks - Upread/free access Changeable in: - Drive setting
U257* Src BinInv7 2257	BICO parameter for selecting the binector for inverter 7 (Output = B647).	Init: 0 Unit: - Indices: - Type: L2 ,B	Menus: - Parameter menu + Free blocks - Upread/free access Changeable in: - Drive setting
U258* Src BinInv8 2258	BICO parameter for selecting the binector for inverter 8 (Output = B648).	Init: 0 Unit: - Indices: - Type: L2 ,B	Menus: - Parameter menu + Free blocks - Upread/free access Changeable in: - Drive setting
U259* Src BinInv9 2259	BICO parameter for selecting the binector for inverter 9 (Output = B649).	Init: 0 Unit: - Indices: - Type: L2 ,B	Menus: - Parameter menu + Free blocks - Upread/free access Changeable in: - Drive setting
U260* Src BinInv10 2260	BICO parameter for selecting the binector for inverter 10 (Output = B650).	Init: 0 Unit: - Indices: - Type: L2 ,B	Menus: - Parameter menu + Free blocks - Upread/free access Changeable in: - Drive setting
U261* Src NAND1 2261	BICO parameter for selecting the binectors for NAND element 1 (Output = B681).	index1: 0 Unit: - Indices: 3 Type: L2 ,B	Menus: - Parameter menu + Free blocks - Upread/free access Changeable in: - Drive setting
U262* Src NAND2 2262	BICO parameter for selecting the binectors for NAND element 2 (Output = B682).	index1: 0 Unit: - Indices: 3 Type: L2 ,B	Menus: - Parameter menu + Free blocks - Upread/free access Changeable in: - Drive setting
U263* Src NAND3 2263	BICO parameter for selecting the binectors for NAND element 3 (Output = B683).	index1: 0 Unit: - Indices: 3 Type: L2 ,B	Menus: - Parameter menu + Free blocks - Upread/free access Changeable in: - Drive setting
U264* Src NAND4 2264	BICO parameter for selecting the binectors for NAND element 4 (Output = B684).	index1: 0 Unit: - Indices: 3 Type: L2 ,B	Menus: - Parameter menu + Free blocks - Upread/free access Changeable in: - Drive setting
U265* Src NAND5 2265	BICO parameter for selecting the binectors for NAND element 5 (Output = B685).	index1: 0 Unit: - Indices: 3 Type: L2 ,B	Menus: - Parameter menu + Free blocks - Upread/free access Changeable in: - Drive setting

Parameter	Description	Data	Read/write
U266* Src NAND6 2266	BICO parameter for selecting the binectors for NAND element 6 (Output = B686).	index1: 0 Unit: - Indices: 3 Type: L2 ,B	Menus: - Parameter menu + Free blocks - Upread/free access Changeable in: - Drive setting
U267* Src NAND7 2267	BICO parameter for selecting the binectors for NAND element 7 (Output = B687).	index1: 0 Unit: - Indices: 3 Type: L2 ,B	Menus: - Parameter menu + Free blocks - Upread/free access Changeable in: - Drive setting
U268* Src NAND8 2268	BICO parameter for selecting the binectors for NAND element 8 (Output = B688).	index1: 0 Unit: - Indices: 3 Type: L2 ,B	Menus: - Parameter menu + Free blocks - Upread/free access Changeable in: - Drive setting
U269* Src SH2 B 2269	Sample&Hold module Input parameter for binectors	index1: 0 Unit: - Indices: 8 Type: L2 ,B	Menus: - Parameter menu + Free blocks - Upread/free access Changeable in: - Drive setting
U270* SH2 Time Slot 2270	Sample&Hold element Parameter for entering the slower time slot	Init: 2 Min: 2 Max: 10 Unit: - Indices: - Type: O2	Menus: - Parameter menu + Free blocks - Upread/free access Changeable in: - Drive setting
U271* Src BinCh1 2271	BICO parameter for selecting the binectors for binary-signal changeover switch 1 (Output= B661).	index1: 0 Unit: - Indices: 3 Type: L2 ,B	Menus: - Parameter menu + Free blocks - Upread/free access Changeable in: - Drive setting
U272* Src BinCh2 2272	BICO parameter for selecting the binectors for binary-signal changeover switch 2 (Output= B662).	index1: 0 Unit: - Indices: 3 Type: L2 ,B	Menus: - Parameter menu + Free blocks - Upread/free access Changeable in: - Drive setting
U273* Src BinCh3 2273	BICO parameter for selecting the binectors for binary-signal changeover switch 3 (Output= B663).	index1: 0 Unit: - Indices: 3 Type: L2 ,B	Menus: - Parameter menu + Free blocks - Upread/free access Changeable in: - Drive setting
U274* Src BinCh4 2274	BICO parameter for selecting the binectors for binary-signal changeover switch 4 (Output= B664).	index1: 0 Unit: - Indices: 3 Type: L2 ,B	Menus: - Parameter menu + Free blocks - Upread/free access Changeable in: - Drive setting
U275* Src BinCh5 2275	BICO parameter for selecting the binectors for binary-signal changeover switch 5 (Output= B665).	index1: 0 Unit: - Indices: 3 Type: L2 ,B	Menus: - Parameter menu + Free blocks - Upread/free access Changeable in: - Drive setting

Parameter	Description	Data	Read/write
U276* Src EXOR1 2276	BICO parameter for selecting the binectors for EXOR (exclusive or) element 1 (Output = B666).	index1: 0 Unit: - Indices: 2 Type: L2 ,B	Menus: - Parameter menu + Free blocks - Upread/free access Changeable in: - Drive setting
U277* Src EXOR2 2277	BICO parameter for selecting the binectors for EXOR element 2 (Output = B667).	index1: 0 Unit: - Indices: 2 Type: L2 ,B	Menus: - Parameter menu + Free blocks - Upread/free access Changeable in: - Drive setting
U278* Src EXOR3 2278	BICO parameter for selecting the binectors for EXOR element 3 (Output = B668).	index1: 0 Unit: - Indices: 2 Type: L2 ,B	Menus: - Parameter menu + Free blocks - Upread/free access Changeable in: - Drive setting
U279* Src D-FlipFlop1 2279	BICO parameter for selecting the binectors for D flipflop element 1 (Outputs: Q = B525, $\overline{Q}$ = B526).	index1: 0 Unit: - Indices: 4 Type: L2 ,B	Menus: - Parameter menu + Free blocks - Upread/free access Changeable in: - Drive setting
U280* Src D-FlipFlop2 2280	BICO parameter for selecting the binectors for D flipflop 2 (Outputs: Q = B527, $\overline{Q}$ = B528).	index1: 0 Unit: - Indices: 4 Type: L2 ,B	Menus: - Parameter menu + Free blocks - Upread/free access Changeable in: - Drive setting
U281* Src RS-FlipFlop1 2281	BICO parameter for selecting the binectors for RS flipflop 1 (Outputs: Q = B501, $\overline{Q}$ = B502).	index1: 0 Unit: - Indices: 2 Type: L2 ,B	Menus: - Parameter menu + Free blocks - Upread/free access Changeable in: - Drive setting
U282* Src RS-FlipFlop2 2282	BICO parameter for selecting the binectors for RS flipflop 2 (Outputs: Q = B503, $\overline{Q}$ = B504).	index1: 0 Unit: - Indices: 2 Type: L2 ,B	Menus: - Parameter menu + Free blocks - Upread/free access Changeable in: - Drive setting
U283* Src RS-FlipFlop3 2283	BICO parameter for selecting the binectors for RS flipflop 3 (Outputs: Q = B505, $\overline{Q}$ = B506).	index1: 0 Unit: - Indices: 2 Type: L2 ,B	Menus: - Parameter menu + Free blocks - Upread/free access Changeable in: - Drive setting
U284* Src RS-FlipFlop4 2284	BICO parameter for selecting the binectors for RS flipflop 4 (Outputs: Q = B507, $\overline{Q}$ = B508).	index1: 0 Unit: - Indices: 2 Type: L2 ,B	Menus: - Parameter menu + Free blocks - Upread/free access Changeable in: - Drive setting
U285* Src RS-FlipFlop5 2285	BICO parameter for selecting the binectors for RS flipflop 5 (Outputs: Q = B509, $\overline{Q}$ = B510).	index1: 0 Unit: - Indices: 2 Type: L2 ,B	Menus: - Parameter menu + Free blocks - Upread/free access Changeable in: - Drive setting

Parameter	Description	Data	Read/write
U286* Src RS-FlipFlop6 2286	BICO parameter for selecting the binectors for RS flipflop 6 (Outputs: Q = B511, ¯Q = B512).	index1: 0 Unit: - Indices: 2 Type: L2 ,B	Menus: - Parameter menu + Free blocks - Upread/free access Changeable in: - Drive setting
U287* Src RS-FlipFlop7 2287	BICO parameter for selecting the binectors for RS flipflop 7 (Outputs: Q = B513, ¯Q = B514).	index1: 0 Unit: - Indices: 2 Type: L2 ,B	Menus: - Parameter menu + Free blocks - Upread/free access Changeable in: - Drive setting
U288* Src RS-FlipFlop8 2288	BICO parameter for selecting the binectors for RS flipflop 8 (Outputs: Q = B515, ¯Q = B516).	index1: 0 Unit: - Indices: 2 Type: L2 ,B	Menus: - Parameter menu + Free blocks - Upread/free access Changeable in: - Drive setting
U289* Src RS-FlipFlop9 2289	BICO parameter for selecting the binectors for RS flipflop 9 (Outputs: Q = B517, ¯Q = B518).	index1: 0 Unit: - Indices: 2 Type: L2 ,B	Menus: - Parameter menu + Free blocks - Upread/free access Changeable in: - Drive setting
U290* SrcRS-FlipFlop10 2290	BICO parameter for selecting the binectors for RS flipflop 10 (Outputs: Q = B519, ¯Q = B520).	index1: 0 Unit: - Indices: 2 Type: L2 ,B	Menus: - Parameter menu + Free blocks - Upread/free access Changeable in: - Drive setting
U291* SrcRS-FlipFlop11 2291	BICO parameter for selecting the binectors for RS flipflop 11 (Outputs: Q = B521, ¯Q = B522).	index1: 0 Unit: - Indices: 2 Type: L2 ,B	Menus: - Parameter menu + Free blocks - Upread/free access Changeable in: - Drive setting
U292* SrcRS-FlipFlop12 2292	BICO parameter for selecting the binectors for RS flipflop 12 (Outputs: Q = B523, ¯Q = B524).	index1: 0 Unit: - Indices: 2 Type: L2 ,B	Menus: - Parameter menu + Free blocks - Upread/free access Changeable in: - Drive setting
U293* Src Timer1 2293	BICO parameter for selecting the binector for the 1st timer (0 to 60,000 s).	Init: 0 Unit: - Indices: - Type: L2 ,B	Menus: - Parameter menu + Free blocks - Upread/free access Changeable in: - Drive setting
U294 Time Timer1 2294	Function parameter for entering the time for the 1st timer (1 to 60,000 s).	index1: 0,000 Min: 0,000 Max: 60,000 Unit: s Indices: 4 ,FDS Type: O2	Menus: - Parameter menu + Free blocks - Upread/free access Changeable in: - Drive setting - Ready
U295* Mode Timer1 2295	Function parameter for entering the mode for the 1st timer (1 to 60,000 s).	Init: 0 Min: 0 Max: 3 Unit: - Indices: - Type: O2	Menus: - Parameter menu + Free blocks - Upread/free access Changeable in: - Drive setting

Parameter	Description	Data	Read/write
U296* Src Timer2 2296	BICO parameter for selecting the binector for the 2nd timer (1 to 60,000 s).	Init: 0 Unit: - Indices: - Type: L2 ,B	Menus: - Parameter menu + Free blocks - Upread/free access Changeable in: - Drive setting
U297 Time Timer2 2297	Function parameter for entering the time for the 2nd timer (1 to 60,000 s). FDS	index1: 0,000 Min: 0,000 Max: 60,000 Unit: s Indices: 4 ,FDS Type: O2	Menus: - Parameter menu + Free blocks - Upread/free access Changeable in: - Drive setting - Ready
U298* Mode Timer2 2298	Function parameter for entering the mode for the 2nd timer(1 to 60,000 s).	Init: 0 Min: 0 Max: 3 Unit: - Indices: - Type: O2	Menus: - Parameter menu + Free blocks - Upread/free access Changeable in: - Drive setting
U299* Src Timer3 2299	BICO parameter for selecting the binector for the 3rd timer (1 to 60,000 s).	Init: 0 Unit: - Indices: - Type: L2 ,B	Menus: - Parameter menu + Free blocks - Upread/free access Changeable in: - Drive setting
U300 Time Timer3 2300	Function parameter for entering the time for the 3rd timer 1 to 60,000 s). FDS	index1: 0,000 Min: 0,000 Max: 60,000 Unit: s Indices: 4 ,FDS Type: O2	Menus: - Parameter menu + Free blocks - Upread/free access Changeable in: - Drive setting - Ready
U301* Mode Timer3 2301	Function parameter for entering the mode for the 3rd timer (1 to 60,000 s).	Init: 0 Min: 0 Max: 3 Unit: - Indices: - Type: O2	Menus: - Parameter menu + Free blocks - Upread/free access Changeable in: - Drive setting
U302* Src Timer4 2302	BICO parameter for selecting the binector for the 4th timer (1 to 60,000 s).	Init: 0 Unit: - Indices: - Type: L2 ,B	Menus: - Parameter menu + Free blocks - Upread/free access Changeable in: - Drive setting
U303 Time Timer4 2303	Function parameter for entering the time for the 4th timer (1 to 60,000 s). FDS	index1: 0,000 Min: 0,000 Max: 60,000 Unit: s Indices: 4 ,FDS Type: O2	Menus: - Parameter menu + Free blocks - Upread/free access Changeable in: - Drive setting - Ready
U304* Mode Timer4 2304	Function parameter for entering the mode for the 4th timer (1 to 600,000 s).	Init: 0 Min: 0 Max: 3 Unit: - Indices: - Type: O2	Menus: - Parameter menu + Free blocks - Upread/free access Changeable in: - Drive setting

Parameter	Description	Data	Read/write
U305* Src Timer5 2305	BICO parameter for selecting the binector for the 5th timer (0 to 600,000 s).	Init: 0 Unit: - Indices: - Type: L2 ,B	Menus: - Parameter menu + Free blocks - Upread/free access Changeable in: - Drive setting
U306 Time Timer5 2306	Function parameter for entering the time for the 5th timer (0 to 600,000s). FDS	index1: 0,00 Min: 0,00 Max: 600,00 Unit: s Indices: 4 ,FDS Type: O2	Menus: - Parameter menu + Free blocks - Upread/free access Changeable in: - Drive setting - Ready
U307* Mode Timer5 2307	Function parameter for entering the mode for the 5th timer(0 to 600,000s).	Init: 0 Min: 0 Max: 3 Unit: - Indices: - Type: O2	Menus: - Parameter menu + Free blocks - Upread/free access Changeable in: - Drive setting
U308* Src Timer6 2308	BICO parameter for selecting the binector for the 6th timer (0 to 600,000s).	Init: 0 Unit: - Indices: - Type: L2 ,B	Menus: - Parameter menu + Free blocks - Upread/free access Changeable in: - Drive setting
U309 Time Timer6 2309	Function parameter for entering the time for the 6th timer (0 to 600,000s). FDS	index1: 0,00 Min: 0,00 Max: 600,00 Unit: s Indices: 4 ,FDS Type: O2	Menus: - Parameter menu + Free blocks - Upread/free access Changeable in: - Drive setting - Ready
U310* Mode Timer6 2310	Function parameter for entering the mode for the 6th timer (0 to 600,00s).	Init: 0 Min: 0 Max: 3 Unit: - Indices: - Type: O2	Menus: - Parameter menu + Free blocks - Upread/free access Changeable in: - Drive setting
U311* Src1 Timer7 2311	BICO parameter for selecting the binector for the 7th timer (1 to 60 000 s) with adaptation.	Init: 0 Unit: - Indices: - Type: L2 ,B	Menus: - Parameter menu + Free blocks - Upread/free access Changeable in: - Drive setting
U312* Src2 Timer7 2312	BICO parameter for selecting the connectors for the 7th timer (1 to 60 000 s) with adaptation.	Init: 1 Unit: - Indices: - Type: L2 ,K	Menus: - Parameter menu + Free blocks - Upread/free access Changeable in: - Drive setting
U313 Time Timer7 2313	Function parameter for entering the time for the 7th timer (1 to 60 000 s) with adaptation.	index1: 0,000 Min: 0,000 Max: 60,000 Unit: s Indices: 4 ,FDS Type: O2	Menus: - Parameter menu + Free blocks - Upread/free access Changeable in: - Drive setting - Ready

Parameter	Description	Data	Read/write
U314* Mode Timer7 2314	Function parameter for entering the mode for the 7th timer (1 to 60 000 s) with adaptation.	Init: 0 Min: 0 Max: 3 Unit: - Indices: - Type: O2	Menus: - Parameter menu + Free blocks - Upread/free access Changeable in: - Drive setting
U315 Param Counter 2315	Function parameter for entering the fixed setpoints for the 16 bit software counter.	index1: 0 Min: 0 Max: 65535 Unit: - Indices: 4 Type: O2	Menus: - Parameter menu + Free blocks - Upread/free access Changeable in: - Drive setting - Ready
U316* Src ParamCounter 2316	BICO parameter for selecting the connectors for the 16 bit software counter.	index1: 561 Unit: - Indices: 4 Type: L2 ,K	Menus: - Parameter menu + Free blocks - Upread/free access Changeable in: - Drive setting
U317* Src Bin Counter 2317	BICO parameter for selecting the binectors for the 16 bit software counter.	index1: 0 Unit: - Indices: 5 Type: L2 ,B	Menus: - Parameter menu + Free blocks - Upread/free access Changeable in: - Drive setting
n318 Counter Output 2318	Visualization parameter for counter output of the 16 bit software counter.	Dec.Plc.: 0 Unit: - Indices: - Type: O2	Menus: - Parameter menu + Free blocks - Upread/free access
U320* SrcComfRGen In 2320	BICO parameter for selecting the connector for the input of the comfort ramp-function generator.	Init: 0 Unit: - Indices: - Type: L2 ,K ,K	Menus: - Parameter menu + Free blocks - Upread/free access Changeable in: - Drive setting
U321* SrcComfRGen Stop 2321	BICO parameter for selecting the binector for stopping of the comfort ramp-function generator.	Init: 0 Unit: - Indices: - Type: L2 ,B	Menus: - Parameter menu + Free blocks - Upread/free access Changeable in: - Drive setting
U322* SrcComfRGen SD 2322	BICO parameter for selecting the binector for shutdown of the comfort ramp-function generator.	Init: 0 Unit: - Indices: - Type: L2 ,B	Menus: - Parameter menu + Free blocks - Upread/free access Changeable in: - Drive setting
U323* SrcComfRGenSetV 2323	BICO parameter for selecting the connector for the setting value of the comfort ramp-function generator.	Init: 0 Unit: - Indices: - Type: L2 ,K ,K	Menus: - Parameter menu + Free blocks - Upread/free access Changeable in: - Drive setting
U324* Src Set ComfRGen 2324	BICO parameter for selecting the binector for setting the comfort ramp-function generator.	Init: 0 Unit: - Indices: - Type: L2 ,B	Menus: - Parameter menu + Free blocks - Upread/free access Changeable in: - Drive setting

Parameter	Description	Data	Read/write
U325* Src Rel ComfRGen 2325	BICO parameter for selecting the binector for releasing the comfort ramp-function generator.	Init: 1 Unit: - Indices: - Type: L2 ,B	Menus: - Parameter menu + Free blocks - Upread/free access Changeable in: - Drive setting
n326 ComfRGen Input 2326	Visualization parameter input of comfort ramp-function generator.	Dec.Plc.: 2 Unit: % Indices: - Type: I4	Menus: - Parameter menu + Free blocks - Upread/free access
U327 ComfRGen Round 2327	Operating mode for rounding of the comfort ramp-function generator. 0 = Rounding does not act upon sudden reduction of input value during acceleration process 1 = Rounding acts at all times. At a sudden reduction of the input value, overshoot can occur.	Init: 0 Min: 0 Max: 1 Unit: - Indices: - Type: O2	Menus: - Parameter menu + Free blocks - Upread/free access Changeable in: - Drive setting - Ready
U328* SrcComfRGenBridg 2328	BICO parameter for selecting the binector for bridging the comfort ramp-function generator.	Init: 0 Unit: - Indices: - Type: L2 ,B	Menus: - Parameter menu + Free blocks - Upread/free access Changeable in: - Drive setting
U329* SrcComfRGenAdap 2329	BICO parameter for selecting the connector for adaptation of the comfort ramp-function generator.	Init: 1 Unit: - Indices: - Type: L2 ,K	Menus: - Parameter menu + Free blocks - Upread/free access Changeable in: - Drive setting
U330 ComfRGenAccelT 2330	Function parameter for input of the acceleration time of the comfort ramp-function generator. The unit of the acceleration time is set in U331.	index1: 10,0 Min: 0,0 Max: 999,9 Unit: - Indices: 4 ,FDS Type: O2	Menus: - Parameter menu + Free blocks - Upread/free access Changeable in: - Drive setting - Ready
U331 ComfRGenUnitAT 2331	Function parameter for entering the unit of the acceleration time of the comfort ramp-function generator. 0 = seconds 1 = minutes 2 = hours	index1: 0 Min: 0 Max: 2 Unit: - Indices: 4 ,FDS Type: O2	Menus: - Parameter menu + Free blocks - Upread/free access Changeable in: - Drive setting - Ready
U332 ComfRGenDecelT 2332	Function parameter for entering the deceleration time of the comfort ramp-function generator. The unit of the deceleration time is set in U333.	index1: 10,0 Min: 0,0 Max: 999,9 Unit: - Indices: 4 ,FDS Type: O2	Menus: - Parameter menu + Free blocks - Upread/free access Changeable in: - Drive setting - Ready
U333 ComfRGenUnitDT 2333	Function parameter for entering the unit of the deceleration time of the comfort ramp-function generator. 0 = seconds 1 = minutes 2 = hours	index1: 0 Min: 0 Max: 2 Unit: - Indices: 4 ,FDS Type: O2	Menus: - Parameter menu + Free blocks - Upread/free access Changeable in: - Drive setting - Ready

Parameter	Description	Data	Read/write
U334 ComfRGenInitRd 2334	Function parameter for input of the initial rounding time of the comfort ramp-function generator.	index1: 0,00 Min: 0,00 Max: 10,00 Unit: s Indices: 4 ,FDS Type: O2	Menus: - Parameter menu + Free blocks - Upread/free access Changeable in: - Drive setting - Ready
U335 ComfRGenEndRd 2335	Function parameter for input of the final rounding time of the comfort ramp-function generator.	index1: 0,00 Min: 0,00 Max: 10,00 Unit: s Indices: 4 ,FDS Type: O2	Menus: - Parameter menu + Free blocks - Upread/free access Changeable in: - Drive setting - Ready
U336 ComfRGenRtdAT 2336	Parameter for entering the rated acceleration time of the comfort ramp-function generator. The following applies: Acceleration time = rated acceleration time -> dy/dt = 100%	Init: 0,01 Min: 0,01 Max: 300,00 Unit: s Indices: - Type: O2	Menus: - Parameter menu + Free blocks - Upread/free access Changeable in: - Drive setting - Ready
U337 ComfRGenQSTime 2337	Parameter for entering the quick stop time of the comfort ramp-function generator.	Init: 10,0 Min: 0,0 Max: 999,9 Unit: s Indices: - Type: O2	Menus: - Parameter menu + Free blocks - Upread/free access Changeable in: - Drive setting - Ready
U338* SrcComfRGen QS 2338	BICO parameter for selecting the binector for quick stop of the comfort ramp-function generator.	Init: 0 Unit: - Indices: - Type: L2 ,B	Menus: - Parameter menu + Free blocks - Upread/free access Changeable in: - Drive setting
n339 ComfRGen EffTime 2339	Visualization parameter for the effective acceleration/deceleration time of the comfort ramp-function generator: Index 0: effective acceleration time Index 1: effective deceleration time	Dec.Plc.: 1 Unit: s Indices: 2 Type: O4	Menus: - Parameter menu + Free blocks - Upread/free access
n340 ComfRGen Output 2340	Visualization parameter for output of the comfort ramp-function generator.	Dec.Plc.: 2 Unit: % Indices: - Type: I4	Menus: - Parameter menu + Free blocks - Upread/free access
n341 ComfRGen dy/dt 2341	Visualization parameter dy/dt of the comfort ramp-function generator.	Dec.Plc.: 2 Unit: % Indices: - Type: I4	Menus: - Parameter menu + Free blocks - Upread/free access
U342 ComfRGen IntLmt 2342	Parameter for input of the internal limitation of the comfort ramp-function generator.	Init: 100,00 Min: 0,00 Max: 200,00 Unit: % Indices: - Type: I4	Menus: - Parameter menu + Free blocks - Upread/free access Changeable in: - Drive setting - Ready
U343* SrcComfRGenPosL 2343	BICO parameter for selecting the connector for the positive internal limitation of the comfort ramp-function generator.	Init: 573 Unit: - Indices: - Type: L2 ,K ,K	Menus: - Parameter menu + Free blocks - Upread/free access Changeable in: - Drive setting

Parameter	Description	Data	Read/write
U344* SrcComfRGenNegL 2344	BICO parameter for selecting the connector for the negative internal limitation of the comfort ramp-function generator.	Init: 574 Unit: - Indices: - Type: L2 ,K ,K	Menus: - Parameter menu + Free blocks - Upread/free access Changeable in: - Drive setting
U345* Src FDS.CoRFG 2345	The parameter makes it possible to disconnect function dataset switchover for the comfort ramp function generator. This permits independent changeover of the ramp generator parameter.	index1: 92 Unit: - Indices: 2 Type: L2 ,B	Menus: - Parameter menu + Free blocks - Upread/free access Changeable in: - Drive setting
U346* Src SH3 KK 2346	Sample&Hold element Input parameter for the double word connectors	index1: 0 Unit: - Indices: 4 Type: L2 ,K ,K	Menus: - Parameter menu + Free blocks - Upread/free access Changeable in: - Drive setting
U347* Src SH3 K 2347	Sample&Hold element Input parameter for connectors	index1: 0 Unit: - Indices: 8 Type: L2 ,K	Menus: - Parameter menu + Free blocks - Upread/free access Changeable in: - Drive setting
U348* Src SH3 B 2348	Sample&Hold module Input parameter for binectors	index1: 0 Unit: - Indices: 8 Type: L2 ,B	Menus: - Parameter menu + Free blocks - Upread/free access Changeable in: - Drive setting
U349* SH3 Time Slot 2349	Sample&Hold element Parameter for entering the slower time slot	Init: 2 Min: 2 Max: 10 Unit: - Indices: - Type: O2	Menus: - Parameter menu + Free blocks - Upread/free access Changeable in: - Drive setting
U350* Src TeCntr Rel 2350	BICO parameter for selecting the binector for enabling the technology controller.	Init: 0 Unit: - Indices: - Type: L2 ,B	Menus: - Parameter menu + Free blocks - Upread/free access Changeable in: - Drive setting
U351 TeCntr RegType 2351	Parameter for entering the controller type of the technology controller. 0 = Normal PID controller 1 = PI controller with D component in actual-value channel	Init: 1 Min: 0 Max: 1 Unit: - Indices: - Type: O2	Menus: - Parameter menu + Free blocks - Upread/free access Changeable in: - Drive setting
U352* Src TeCntr Setp 2352	BICO parameter for selecting the connector for the setpoint of the technology controller.	Init: 0 Unit: - Indices: - Type: L2 ,K	Menus: - Parameter menu + Free blocks - Upread/free access Changeable in: - Drive setting
U353 TeCntr SetpSmth 2353	Parameter for entering the setpoint smoothing time constants of the technology controller.	Init: 0,00 Min: 0,00 Max: 60,00 Unit: s Indices: - Type: O2	Menus: - Parameter menu + Free blocks - Upread/free access Changeable in: - Drive setting - Ready

Parameter	Description	Data	Read/write
n354 TeCntr Setp 2354	Visualization parameter, smoothed setpoint of the technology controller.	Dec.Plc.: 1 Unit: % Indices: - Type: I2	Menus: - Parameter menu + Free blocks - Upread/free access
U355* Src TeCntr ActV 2355	BICO parameter for selecting the connector for the actual value of the technology contoller.	Init: 0 Unit: - Indices: - Type: L2 ,K	Menus: - Parameter menu + Free blocks - Upread/free access Changeable in: - Drive setting
n356 TeCntr ActV 2356	Visualization parameter, actual-value of the technology controller.	Dec.Plc.: 1 Unit: % Indices: - Type: I2	Menus: - Parameter menu + Free blocks - Upread/free access
n357 TeCntr Deviation 2357	Visualization parameter, set/actual value deviation of the technology controller with the "PID controller" type. The inverted actual value is displayed on the "PI controller with D component in actual-value channel" controller type.	Dec.Plc.: 1 Unit: % Indices: - Type: I2	Menus: - Parameter menu + Free blocks - Upread/free access
U358 TeCntr ActVSmth 2358	Parameter for entering the actual-value smoothing time constants of the technology controller.	Init: 0,00 Min: 0,00 Max: 60,00 Unit: s Indices: - Type: O2	Menus: - Parameter menu + Free blocks - Upread/free access Changeable in: - Drive setting - Ready
n359 TeCntr Input 2359	Visualization parameter, input of the technology controller.	Dec.Plc.: 1 Unit: % Indices: - Type: I2	Menus: - Parameter menu + Free blocks - Upread/free access
U360* SrcTeCntr I Set 2360	BICO parameter for selecting the binector for setting the I component of the technology controller.	Init: 556 Unit: - Indices: - Type: L2 ,B	Menus: - Parameter menu + Free blocks - Upread/free access Changeable in: - Drive setting
U361* Src TeCntr ISetV 2361	BICO parameter for selecting the connector for the setting value of the technology controller's I component.	Init: 0 Unit: - Indices: - Type: L2 ,K	Menus: - Parameter menu + Free blocks - Upread/free access Changeable in: - Drive setting
U362* Src TeCntr Droop 2362	BICO parameter for selecting the connector for the droop of the technology controller.	Init: 0 Unit: - Indices: - Type: L2 ,K	Menus: - Parameter menu + Free blocks - Upread/free access Changeable in: - Drive setting
U363* Src TeCntrGainAd 2363	BICO parameter for selecting the connector for the gain adaption of the technology controller.	Init: 1 Unit: - Indices: - Type: L2 ,K	Menus: - Parameter menu + Free blocks - Upread/free access Changeable in: - Drive setting
U364 TeCntr BasicGain 2364	Function parameter for entering the basic gain of the technology controller.	index1: 3,00 Min: 0,00 Max: 125,00 Unit: - Indices: 4 ,FDS Type: O2	Menus: - Parameter menu + Free blocks - Upread/free access Changeable in: - Drive setting - Ready

Parameter	Description	Data	Read/write
n365 TeCntr Eff.Gain 2365	Visualization parameter, effective gain of the technology controller.	Dec.Plc.: 2 Unit: - Indices: - Type: I2	Menus: - Parameter menu + Free blocks - Upread/free access
U366 TeCntr Time 2366	Function parameter for entering the integral time of the technology controller.	index1: 3,00 Min: 0,00 Max: 100,00 Unit: s Indices: 4 ,FDS Type: O2	Menus: - Parameter menu + Free blocks - Upread/free access Changeable in: - Drive setting - Ready
U367 TeCntrDerivation 2367	Function parameter for entering the derivative time of the technology controller.	index1: 0,00 Min: 0,00 Max: 60,00 Unit: s Indices: 4 ,FDS Type: O2	Menus: - Parameter menu + Free blocks - Upread/free access Changeable in: - Drive setting - Ready
U368* Src TeCntr PRE 2368	BICO parameter for selecting the connector for the pre-control signal of the technology controller.	Init: 0 Unit: - Indices: - Type: L2 ,K	Menus: - Parameter menu + Free blocks - Upread/free access Changeable in: - Drive setting
U369 TeCntrFStpOutLim 2369	Parameter for entering a fixed setpoint value for the output limitation ramp-function generator of the technology controller.	Init: 100,0 Min: 0,0 Max: 200,0 Unit: % Indices: - Type: I2	Menus: - Parameter menu + Free blocks - Upread/free access Changeable in: - Drive setting
U370* Src TeCntrOutLim 2370	BICO parameter for selecting the connectors for the output limitation of the technology controller. Index 1: Connector for upper output limitation (B+) Index 2: Connector for lower output limitation (B-)	index1: 586 Unit: - Indices: 2 Type: L2 ,K	Menus: - Parameter menu + Free blocks - Upread/free access Changeable in: - Drive setting
U371 TeCntrOutLimTime 2371	Parameter for entering the acceleration/deceleration time for the output limitation of the technology controller.	Init: 0,00 Min: 0,00 Max: 100,00 Unit: s Indices: - Type: O2	Menus: - Parameter menu + Free blocks - Upread/free access Changeable in: - Drive setting - Ready
n372 TeCntr Output 2372	Visualization parameter, output of the technology controller after output limitation.	Dec.Plc.: 1 Unit: % Indices: - Type: I2	Menus: - Parameter menu + Free blocks - Upread/free access
U373* SrcJ_Ext 2373	BICO parameter for selecting the connector from which the moment of inertia for torque pre-control is read in.	index1: 0 Unit: - Indices: 2 ,BDS Type: L2 ,K	Menus: - Parameter menu + Control/gating unit + Speed control - Upread/free access Changeable in: - Drive setting
U374 SrcAccPre 2374	BICO parameter for selecting an connector from which the acceleration for torque pre-control is read in.	index1: 0 Unit: - Indices: 2 ,BDS Type: L2 ,K ,K	Menus: - Parameter menu + Control/gating unit + Speed control - Upread/free access Changeable in: - Drive setting

Parameter	Description	Data	Read/write
U375* Src T FixVal 2375	BICO parameter for selecting a connector from which a fixed torque pre-control value is read in.	index1: 0 Unit: - Indices: 2 ,BDS Type: L2 ,K	Menus: - Parameter menu + Control/gating unit + Speed control - Upread/free access Changeable in: - Drive setting
U376* Src Select J 2376	BICO parameter for selecting a binector from which the command to select a fixed (U378) or a variable moment of inertia (U373) for torque pre-control is read in	index1: 0 Unit: - Indices: 2 ,BDS Type: L2 ,B	Menus: - Parameter menu + Control/gating unit + Speed control - Upread/free access Changeable in: - Drive setting
U377* Src Sel Acc T 2377	BICO parameter for selecting a binector from which the command to select a fixed (U375) is read in or from the pre-control torque calculated from acceleration.	index1: 0 Unit: - Indices: 2 ,BDS Type: L2 ,B	Menus: - Parameter menu + Control/gating unit + Speed control - Upread/free access Changeable in: - Drive setting
U378* J FixVal 2378	Parameter for indicating a fixed moment of inertia for the torque pre-control. Normialization n_ref (P353) ---------- m_ref (P354) Thus the rated starting time is given in seconds.	Init: 0,00 Min: 0,00 Max: 600,00 Unit: s Indices: - Type: O2	Menus: - Parameter menu + Control/gating unit + Speed control - Upread/free access Changeable in: - Drive setting - Ready
U379* J / Scaling 2379	Parameter for indicating the scaling of the external moments of inertia (U373)	Init: 100,00 Min: 0,00 Max: 200,00 Unit: % Indices: - Type: O2	Menus: - Parameter menu + Control/gating unit + Speed control - Upread/free access Changeable in: - Drive setting - Ready
U380* Src SimpRGen In 2380	BICO parameter for selecting the connector for the input of the simple ramp-function generator.	Init: 0 Unit: - Indices: - Type: L2 ,K	Menus: - Parameter menu + Free blocks - Upread/free access Changeable in: - Drive setting
U381* Src Set SimpRGen 2381	BICO parameter for selecting the binector for setting the simple ramp-function generator.	Init: 0 Unit: - Indices: - Type: L2 ,B	Menus: - Parameter menu + Free blocks - Upread/free access Changeable in: - Drive setting
U382* Src SetVSimpRGen 2382	BICO parameter for selecting the connector for the setting value of the simple ramp-function generator.	Init: 0 Unit: - Indices: - Type: L2 ,K	Menus: - Parameter menu + Free blocks - Upread/free access Changeable in: - Drive setting
U383 SimpRG Ac/DcTime 2383	Parameter for entering the acceleration and deceleration time of the simple ramp-function generator. Index 1: Acceleration time Index 2: Deceleration time	index1: 10,00 Min: 0,00 Max: 100,00 Unit: s Indices: 2 Type: O2	Menus: - Parameter menu + Free blocks - Upread/free access Changeable in: - Drive setting - Ready

Parameter	Description	Data	Read/write
n384 KPC PROFIdriveV 2384	Parameter is only necessary for the parameter model of PROFIdrive V3 standard. Parameter is only visible if PROFIdrive V3 is set.	Dec.Plc.: 3 Unit: 1/s Indices: - Type: O4	Menus: - Parameter menu - Upread/free access - Drive setting
U385* Src T (total1) 2385	BICO parameter for selecting a parameter from which a torque value for the torque addition block is to be read in.	index1: 0 Unit: - Indices: 2 ,BDS Type: L2 ,K	Menus: - Parameter menu + Control/gating unit + Current control - Upread/free access Changeable in: - Drive setting
U386* Src T (total2) 2386	BICO parameter for selecting a parameter from which a torque value for the torque addition block is to be read in.	index1: 0 Unit: - Indices: 2 ,BDS Type: L2 ,K	Menus: - Parameter menu + Control/gating unit + Current control - Upread/free access Changeable in: - Drive setting
U387* Src T (total3) 2387	BICO parameter for selecting a parameter from which a torque value for the torque addition block is to be read in.	index1: 0 Unit: - Indices: 2 ,BDS Type: L2 ,K	Menus: - Parameter menu + Control/gating unit + Current control - Upread/free access Changeable in: - Drive setting
U388* Mom_Inertia.J 2388	Moment of inertia in % (for calculating the acceleration torque)	index1: 100,00 Min: 0,00 Max: 200,00 Unit: % Indices: 2 Type: O2	Menus: - Parameter menu + Control/gating unit + Current control - Upread/free access Changeable in: - Drive setting - Ready
U389* Ber.M(accel) 2389	Selection of calculation of the acceleration torque: 0: with scaled moment of inertia 1: with moment of inertia in %	Init: 0 Min: 0 Max: 1 Unit: - Indices: - Type: O2	Menus: - Parameter menu + Control/gating unit + Current control - Upread/free access Changeable in: - Drive setting
U390* SrcWobbSetp Unwo 2390	BICO parameter for selecting the connector for the input of the wobble generator	Init: 0 Unit: - Indices: - Type: L2 ,K	Menus: - Parameter menu + Free blocks - Upread/free access Changeable in: - Drive setting
U391* Src Wobb SyncInp 2391	BICO parameter for selecting the binector for the master synchronizing signal of the wobble generator	Init: 0 Unit: - Indices: - Type: L2 ,B	Menus: - Parameter menu + Free blocks - Upread/free access Changeable in: - Drive setting
U392* Src Wobb Rel 2392	BICO parameter for selecting the binector for wobble release	Init: 0 Unit: - Indices: - Type: L2 ,B	Menus: - Parameter menu + Free blocks - Upread/free access Changeable in: - Drive setting

Parameter	Description	Data	Read/write
U393 Wobb Amplitude 2393	Function parameter for entering the wobble amplitude as a relation to the input signal amount (setpoint)	index1: 0,00 Min: 0,00 Max: 20,00 Unit: % Indices: 4 ,FDS Type: O2	Menus: - Parameter menu + Free blocks - Upread/free access Changeable in: - Drive setting - Ready
U394 Wobb Freq 2394	Function parameter for entering the frequency of the wobble signal	index1: 60,0 Min: 0,1 Max: 120,0 Unit: 1/min Indices: 4 ,FDS Type: O2	Menus: - Parameter menu + Free blocks - Upread/free access Changeable in: - Drive setting - Ready
U395 Wobb Phase Shift 2395	Function parameter for entering the phase shift of the wobble signal compared to the master synchronizing signal. At a value of 360°, the synchronizing signal is not observed; coasting wobbling takes place.	index1: 360 Min: 0 Max: 360 Unit: ° (alt) Indices: 4 ,FDS Type: O2	Menus: - Parameter menu + Free blocks - Upread/free access Changeable in: - Drive setting - Ready
U396 Wobb P-Step 2396	Function parameter for entering the amount of the negative P step as a percentage of the wobble amplitude	index1: 0,00 Min: 0,00 Max: 100,00 Unit: % Indices: 4 ,FDS Type: O2	Menus: - Parameter menu + Free blocks - Upread/free access Changeable in: - Drive setting - Ready
U397 Wobb P-Step 2397	Function parameter for entering the amount of the positive P step as a percentage of the wobble amplitude.	index1: 0,00 Min: 0,00 Max: 100,00 Unit: % Indices: 4 ,FDS Type: O2	Menus: - Parameter menu + Free blocks - Upread/free access Changeable in: - Drive setting - Ready
U398 Wobb Sampl Ratio 2398	Function parameter for entering the time portion of the increasing edge of the wobble signal	index1: 50 Min: 0 Max: 100 Unit: % Indices: 4 ,FDS Type: O2	Menus: - Parameter menu + Free blocks - Upread/free access Changeable in: - Drive setting - Ready
n399 Wobb Gen Outp 2399	Visualization parameter for displaying the wobble signal.	Dec.Plc.: 1 Unit: % Indices: - Type: I2	Menus: - Parameter menu + Free blocks - Upread/free access
U400* SrcConnAnaDel_1 2400	Parameter for selecting the double word connector for the 1st analog delay element.	Init: 0 Unit: - Indices: - Type: L2 ,K ,K	Menus: - Parameter menu + Free blocks - Upread/free access Changeable in: - Drive setting - Ready
U401* AnaDelayEl_1_T 2401	Parameter for entering the delay cycles of the 1st analog delay element	Init: 0 Min: 0 Max: 32 Unit: - Indices: - Type: O2	Menus: - Parameter menu + Free blocks - Upread/free access Changeable in: - Drive setting - Ready

Parameter	Description	Data	Read/write
U402* SrcConnAnaDE_2 2402	Parameter for selecting the double word connector for the 2nd analog delay element	Init: 0 Unit: - Indices: - Type: L2 ,K ,K	Menus: - Parameter menu + Free blocks - Upread/free access Changeable in: - Drive setting - Ready
U403* AnaDE_2_T 2403	Parameter for entering the delay cycles of the 2nd analog delay element	Init: 0 Min: 0 Max: 32 Unit: - Indices: - Type: O2	Menus: - Parameter menu + Free blocks - Upread/free access Changeable in: - Drive setting - Ready
U404* SrcSampTChange 2404	Parameter array for selecting the binectors for the 6 sampling time changeover contacts	index1: 0 Unit: - Indices: 6 Type: L2 ,B	Menus: - Parameter menu + Free blocks - Upread/free access Changeable in: - Drive setting - Ready
U405* SrcMulDiv32_1_32 2405	Parameter for selecting the 32-bit connector for the high-resolution multiplier/divider 1 (2-word)	Init: 0 Unit: - Indices: - Type: L2 ,K ,K	Menus: - Parameter menu + Free blocks - Upread/free access Changeable in: - Drive setting - Ready
U406* SrcMulDiv32_1_16 2406	Parameter for selecting the 16-bit connectors for the high-resolution multiplier/divider 1 (2-word)	index1: 0 Unit: - Indices: 2 Type: L2 ,K	Menus: - Parameter menu + Free blocks - Upread/free access Changeable in: - Drive setting - Ready
U407* SrcPulsGen Tp 2407	Parameter for selecting a connector as input for determination of the period of the 1st pulse generator	Init: 613 Unit: - Indices: - Type: L2 ,K	Menus: - Parameter menu + Free blocks - Upread/free access Changeable in: - Drive setting - Ready
U408* Src Integr32_1 2408	Parameter array for selecting the double-word connectors for the 1st 32-bit integrator: Index 1: Current input value Index 2: Upper limit Index 3: Lower limit Index 4: Set value	index1: 0 Unit: - Indices: 4 Type: L2 ,K ,K	Menus: - Parameter menu + Free blocks - Upread/free access Changeable in: - Drive setting - Ready
U409* Src Integr32_1_t 2409	Parameter for selecting the integral time constant for the 1st 32-bit integrator.	Init: 611 Unit: - Indices: - Type: L2 ,K	Menus: - Parameter menu + Free blocks - Upread/free access Changeable in: - Drive setting - Ready
U410* Src Integr32_1_s 2410	Parameter for selecting a binector as setting command for the 1st 32-bit integrator.	Init: 0 Unit: - Indices: - Type: L2 ,B	Menus: - Parameter menu + Free blocks - Upread/free access Changeable in: - Drive setting - Ready

Parameter	Description	Data	Read/write
U411* Src Integr32_2 2411	Parameter arry for selecting the double-word connectors for the 2nd 32-bit integrator. Index 1: Current input value Index 2: Upper limit Index 3: Lower limit Index 4: Set value	index1: 0 Unit: - Indices: 4 Type: L2 ,K ,K	Menus: - Parameter menu + Free blocks - Upread/free access Changeable in: - Drive setting - Ready
U412* Src Integr32_2_t 2412	Parameter for selecting the integral time constant for the 2nd 32-bit integrator	Init: 612 Unit: - Indices: - Type: L2 ,K	Menus: - Parameter menu + Free blocks - Upread/free access Changeable in: - Drive setting - Ready
U413* Src Integr32_2_s 2413	Parameter for selecting a binector as setting command for the 2nd 32-bit integrator.	Init: 0 Unit: - Indices: - Type: L2 ,B	Menus: - Parameter menu + Free blocks - Upread/free access Changeable in: - Drive setting - Ready
U414* Src PT1Gl32_1 2414	Parameter for selecting a double-word connector as input value for the 1st 32-bit PT1 element.	Init: 0 Unit: - Indices: - Type: L2 ,K ,K	Menus: - Parameter menu + Free blocks - Upread/free access Changeable in: - Drive setting - Ready
U415* PT1Element32_1_t 2415	Parameter for entering the filtering time for the 1st 32-bit PT1 element.	Init: 0 Min: 0 Max: 10000 Unit: ms Indices: - Type: O2	Menus: - Parameter menu + Free blocks - Upread/free access Changeable in: - Drive setting - Ready
U416* SrcPT1Elem32_1_s 2416	Parameter for selecting a binector as setting comand for the 1st 32-bit PT1 element.	Init: 0 Unit: - Indices: - Type: L2 ,B	Menus: - Parameter menu + Free blocks - Upread/free access Changeable in: - Drive setting - Ready
U417* Src PT1Elem32_2 2417	Parameter for selecting a double-word connector as input value for the 2nd 32-bit PT1 element	Init: 0 Unit: - Indices: - Type: L2 ,K ,K	Menus: - Parameter menu + Free blocks - Upread/free access Changeable in: - Drive setting - Ready
U418* PT1Elem32_2_t 2418	Parameter for entering the filtering time for the 2nd 32-bit PT1 element.	Init: 0 Min: 0 Max: 10000 Unit: ms Indices: - Type: O2	Menus: - Parameter menu + Free blocks - Upread/free access Changeable in: - Drive setting - Ready
U419* Src PT1El32_2_s 2419	Parameter for selecting a binector as the setting command for the 2nd 32-bit PT1 element.	Init: 0 Unit: - Indices: - Type: L2 ,B	Menus: - Parameter menu + Free blocks - Upread/free access Changeable in: - Drive setting - Ready

Parameter	Description	Data	Read/write
U420* Src DElem32_1 2420	Parameter for selecting a double-word connector as input value for the 1st 32-bit D element.	Init: 0 Unit: - Indices: - Type: L2 ,K ,K	Menus: - Parameter menu + Free blocks - Upread/free access Changeable in: - Drive setting - Ready
U421* Src DElem32_1_t 2421	Parameter for entering the time constant for the 1st 32-bit D element	Init: 0,01 Min: 0,01 Max: 300,00 Unit: s Indices: - Type: O2	Menus: - Parameter menu + Free blocks - Upread/free access Changeable in: - Drive setting - Ready
U422* Src Inputs RM 2422	Parameter array for selecting the double-word connectors for the real master. Index 1: Current input value Index 2: Setting value Index 3: Speed actual-value	index1: 0 Unit: - Indices: 3 Type: L2 ,K ,K	Menus: - Parameter menu + Free blocks - Upread/free access Changeable in: - Drive setting
U423* Smooth. Input RM 2423	Parameter for entering the smoothing time constant for the input signal of the Real Master.	Init: 0 Min: 0 Max: 100 Unit: ms Indices: - Type: O2	Menus: - Parameter menu + Free blocks - Upread/free access Changeable in: - Drive setting - Ready
U424* DeadtimeCompRM 2424	Parameter for entering the time constant for the deadtime compensation of the real master.	Init: 0,00 Min: 0,00 Max: 100,00 Unit: ms Indices: - Type: O2	Menus: - Parameter menu + Free blocks - Upread/free access Changeable in: - Drive setting - Ready
U425* ACL RealMaster 2425	Parameter for entering the axis cycle length for the real master. Index 1: Axis cycle length for integrator Index 2: Axis cycle length of input value.	index1: 0 Min: 0 Max: 2147483647 Unit: - Indices: 2 Type: O4	Menus: - Parameter menu + Free blocks - Upread/free access Changeable in: - Drive setting - Ready
U426* Src Set RM 2426	Parameter for selecting a binector as setting command for the real master	Init: 0 Unit: - Indices: - Type: L2 ,B	Menus: - Parameter menu + Free blocks - Upread/free access Changeable in: - Drive setting - Ready
U427* SmthDeadTCompRM 2427	Parameter for entering the smoothing time constant for the deadtime compensation of the real master.	Init: 0 Min: 0 Max: 100 Unit: ms Indices: - Type: O2	Menus: - Parameter menu + Free blocks - Upread/free access Changeable in: - Drive setting - Ready
U428* V-Rated RM 2428	Parameter for entering the rated speed in [1000 LU/min] for the real master	Init: 0,00 Min: 0,00 Max: 20000000,00 Unit: - Indices: - Type: O4	Menus: - Parameter menu + Free blocks - Upread/free access Changeable in: - Drive setting - Ready

Parameter	Description	Data	Read/write
U429* Src Inputs VM 2429	The parameter defines the input values for the integrator of the virtual master axis. Index 1: Input value [%] Index 2: Set value [LU]	index1: 0 Unit: - Indices: 2 Type: L2 ,K ,K	Menus: - Parameter menu + Free blocks - Upread/free access Changeable in: - Drive setting - Ready
U430 Axis Cycle VMAx 2430	Parameter for entering the axis cycle length for the integrator of the virtual master axis.	Init: 0 Min: 0 Max: 2147483647 Unit: - Indices: - Type: O4	Menus: - Parameter menu + Free blocks - Upread/free access Changeable in: - Drive setting - Ready
U431* V-Rated VM 2431	Parameter for entering the rated speed [1000 LU/min] for the 1st 32-bit integrator virtual master axis.	Init: 0,00 Min: 0,00 Max: 20000000,00 Unit: - Indices: - Type: O4	Menus: - Parameter menu + Free blocks - Upread/free access Changeable in: - Drive setting - Ready
U432* Src Set VM 2432	Parameter for selecting a binector as setting command for the integrator of the virtual master axis.	Init: 0 Unit: - Indices: - Type: L2 ,B	Menus: - Parameter menu + Free blocks - Upread/free access Changeable in: - Drive setting - Ready
U433* Integr32_1_Ti 2433	Parameter for entering the integral time constant of the 1st 32-bit integrator.	Init: 0,000 Min: 0,000 Max: 60,000 Unit: s Indices: - Type: O2	Menus: - Parameter menu + Free blocks - Upread/free access Changeable in: - Drive setting - Ready
U434* Integr32_2_Ti 2434	Parameter for entering the integral time constant of the 2nd 32-bit integrator.	Init: 0,000 Min: 0,000 Max: 60,000 Unit: s Indices: - Type: O2	Menus: - Parameter menu + Free blocks - Upread/free access Changeable in: - Drive setting - Ready
U435* ImpGen_1_Tp 2435	Parameter for entering the period of the 1st pulse generator.	Init: 0 Min: 0 Max: 60000 Unit: ms Indices: - Type: O2	Menus: - Parameter menu + Free blocks - Upread/free access Changeable in: - Drive setting - Ready
U438* Src ConnToPar # 2438	BICO parameter for selecting the connector whose value supplies the parameter number for the connector-to-parameter converter.	index1: 479 Unit: - Indices: 5 Type: L2 ,K	Menus: - Parameter menu + Free blocks - Upread/free access Changeable in: - Drive setting - Ready
U439* SrcConnToPar Ind 2439	BICO parameter for selecting the connector whose value supplies the parameter index for the connector-to-parameter converter.	index1: 480 Unit: - Indices: 5 Type: L2 ,K	Menus: - Parameter menu + Free blocks - Upread/free access Changeable in: - Drive setting - Ready

Parameter	Description	Data	Read/write
U440* P-Ampf Gain 2440	Kp for the P amplifier/multiplier (2-word) Figure range: -999.99 bis 999.99 Index 1: for 1st P amplifer/multiplier Index 2: for 2nd P amplifer/multiplier	index1: 1,00 Min: -1000,00 Max: 1000,00 Unit: - Indices: 2 Type: I4	Menus: - Parameter menu + Free blocks - Upread/free access Changeable in: - Drive setting - Ready
U441* Src P-Amplifier 2441	Parameter for selecting 32-bit connectors for the P amplifier/multiplier (2-word) Index 1: 1st P amplifier/multiplier Index 2: 2nd P amplifier/multiplier	index1: 0 Unit: - Indices: 2 Type: L2 ,K ,K	Menus: - Parameter menu + Free blocks - Upread/free access Changeable in: - Drive setting - Ready
U442* Shift 32_number 2442	Number of shift steps for the shift multiplier/divider. Figure range: -31 to 31 Index 1: for 1st shift multiplier/divider Index 2: for 2nd shift multiplier/divider Index 3: for 3rd shift multiplier/divider Index 4: for 4th shift multiplier/divider	index1: 0 Min: -31 Max: 31 Unit: - Indices: 4 Type: I2	Menus: - Parameter menu + Free blocks - Upread/free access Changeable in: - Drive setting - Ready
U443* Src Shift32 2443	Parameter for selecting 32-bit connectors for the shift multipliers/dividers (2-word) Index 1: 1st shift multiplier/divider Index 2: 2nd shift multiplier/divider Index 3: 3rd shift multiplier/divider Index 4: 4th shift multiplier/divider	index1: 0 Unit: - Indices: 4 Type: L2 ,K ,K	Menus: - Parameter menu + Free blocks - Upread/free access Changeable in: - Drive setting - Ready
U444* Src ConnToPar V 2444	BICO parameter for selecting the connector whose value is to be stored on the parameter. IMPORTANT. If there is a change of softwiring during the "Operation" drive status, the trigger condition must always be softwired and be at 0, as otherwise unintentional parameter changes may occur.	index1: 0 Unit: - Indices: 5 Type: L2 ,K ,K	Menus: - Parameter menu + Free blocks - Upread/free access Changeable in: - Drive setting - Ready
U445* ConnToPar Par# 2445	Function parameter whose value contains the parameter number for the connector-to- parameter converter. 0 = no parameter selected.	index1: 0 Min: 0 Max: 2999 Unit: - Indices: 5 Type: O2	Menus: - Parameter menu + Free blocks - Upread/free access Changeable in: - Drive setting - Ready
U446* ConnToPar Index 2446	Function parameter whose value contains the index of the parameter for the connector-to- parameter converter. 0 = no index parameter.	index1: 0 Min: 0 Max: 255 Unit: - Indices: 5 Type: O2	Menus: - Parameter menu + Free blocks - Upread/free access Changeable in: - Drive setting - Ready
U447* SrcConnToPar Trg 2447	BICO parameter for selecting the binector for the trigger signal which results in storage of the connector value on the parameter. IMPORTANT: If the softwiring is changed during the "Operation" drive status, the trigger condition must always be softwired and be at 0, as otherwise unintentional parameter changes may occur.	index1: 0 Unit: - Indices: 5 Type: L2 ,B	Menus: - Parameter menu + Free blocks - Upread/free access Changeable in: - Drive setting - Ready

Parameter	Description	Data	Read/write
U448* SrcConnToParEEP R 2448	BICO parameter for selecting the binector which determines the memory area for the connector-to-parameter conversion. 0 = RAM 1 = EEPROM IMPORTANT. If the EEPROM is continually written with different values, this will reduce the service life of the component.	index1: 0 Unit: - Indices: 5 Type: L2 ,B	Menus: - Parameter menu + Free blocks - Upread/free access Changeable in: - Drive setting - Ready
U449* SrcParToConnRd 2449	BICO parameter for selecting the binector which determines the type of access for the connector-to-parameter conversion. 0 = write 1 = read	index1: 0 Unit: - Indices: 5 Type: L2 ,B	Menus: - Parameter menu + Free blocks - Upread/free access Changeable in: - Drive setting - Ready
n450 CycleSetp.Synch 2450	The parameter shows the status of the synchronous running status signals Index 1: Low word of the synchronous running status signal Index 2: High word of the synchronous running status signal	Dec.Plc.: 0 Unit: - Indices: 2 Type: V2	Menus: - Parameter menu + Technology + Synchronism - Upread/free access
U451* Src MastV Corr 2451	Source for master setpoint correction: Source switchover from master setpoint 1 to master setpoint 2 with binector U452.1. Master setpoint 2 can be influenced with a gear step (U457). Index 1: Master setpoint 1 [LU] Index 2: Master setpoint 2 with gear step [LU] Index 3: Setting value [LU] for integrator and master setpoint KK830 Index 4: Speed master setpoint [%] Index5: Speed master setpoint 2 [%]	index1: 0 Unit: - Indices: 5 Type: L2 ,K ,K	Menus: - Parameter menu + Technology + Synchronism - Upread/free access Changeable in: - Drive setting
U452* CW MastVCorr 2452	Control word for master setpoint correction: Index 1: Trigger master setpoint correction. Start of correction and displacement ramp injection at U453. Index 2: Master setpoint selection, 0=MS1, 1=MS2 Index 3: Release of direction reversal for the shortest correction displacement Index 4: Set trigger output Index 5: Enable displacement correction Index 6: Enable synchronization	index1: 0 Unit: - Indices: 6 Type: L2 ,B	Menus: - Parameter menu + Technology + Synchronism - Upread/free access Changeable in: - Drive setting
U453* Offset Corr 2453	Displacement value [LU] of master setpoint correction: This value is passed via the ramp to the master setpoint as correction or adjustment value depending on the function.	Init: 826 Unit: - Indices: - Type: L2 ,K ,K	Menus: - Parameter menu + Technology + Synchronism - Upread/free access Changeable in: - Drive setting

Parameter	Description	Data	Read/write
U454 SpeedAdj MastV 2454	Speed adjustment of the master setpoint correction [%] The rate of correction can be matched on a per cent basis to the maximum correction speed.	Init: 1 Unit: - Indices: - Type: L2 ,K ,K	Menus: - Parameter menu + Technology + Synchronism - Upread/free access Changeable in: - Drive setting
U455* Offs Corr Param 2455	Master setpoint displacement correction parameter: Index 1: Max. acceleration of the ramp in 1000 LU/s^2 with two decimal places. Index 2: Max. rate of correction in 1000 LU/min with two decimal places. Adjustable via U454 [%] Index 3: Rated speed master setpoint 1 in 1000 LU/min with two decimal places. Index 4: Rated speed master setpoint 2 in 1000 LU/min with two decimal places. Function diagram 845	index1: 0,00 Min: 0,00 Max: 20000000,00 Unit: - Indices: 4 Type: I4	Menus: - Parameter menu - Upread/free access Changeable in: - Drive setting - Ready
U456* MastV Corr ACL 2456	Axis cycle lengths of the master setpoint correction Index 1: Axis cycle length MasterSetpoint 1 [LU] Index 2: Axis cycle length MasterSetpointt 2 [LU] Index 3: Axis cycle length MasterSetpoint output KK830 [LU]	index1: 4096 Min: 0 Max: 2147483647 Unit: - Indices: 3 Type: I4	Menus: - Parameter menu + Technology + Synchronism - Upread/free access Changeable in: - Drive setting
U457* Factor MastV 2 2457	Gear factor adjustment MasterSetpoint2 Index1: Numerator Index2: Denominator (only positive values not equal to zero) Index3: Numerator gear 2 Index4: Denominator gear 2 (only positive values not equal to zero) Function diagram 845.5	index1: 1 Min: -32767 Max: 32767 Unit: - Indices: 4 Type: I2	Menus: - Parameter menu + Technology + Synchronism - Upread/free access Changeable in: - Drive setting - Ready
U458* FuncSelec MastV 2458	Function selection of the master value correction ========== 0 = master value correction 1 = master value adjustment Master value correction: Setpoint jumps caused by referencing on the fly are evened out by the compensatory motion. Master value adjustment: A relative displacement can be injected onto the setpoint similarly to the displacement angle adjustment procedure during synchronizing. The function is triggered by U452.1.	Init: 0 Unit: - Indices: - Type: L2	Menus: - Parameter menu + Technology + Synchronism - Upread/free access Changeable in: - Drive setting - Ready
n459 Synch TabPos 2459	Display parameter of the table position of: Index 1: (K824) Table position on the x-axis Index 2: (K825) Table position on the y-axis	Dec.Plc.: 0 Unit: - Indices: 2 Type: I4	Menus: - Parameter menu + Technology + Synchronism - Upread/free access

Parameter	Description	Data	Read/write
U460* Src.AddDispl M 2460	Injectable additive displacement distance at input of synchronous operation block [FD834.1] Index 1: Displacement distance Index 2: Displacement speed	index1: 0 Unit: - Indices: 2 Type: L2 ,K ,K	Menus: - Parameter menu + Technology + Synchronism - Upread/free access Changeable in: - Drive setting
U461* Src AddDispl S 2461	Injectable additive displacement distance at output of synchronous operation block [FD836.2] Index 1: Displacement distance Index 2: Displacement speed	index1: 0 Unit: - Indices: 2 Type: L2 ,K ,K	Menus: - Parameter menu + Technology + Synchronism - Upread/free access Changeable in: - Drive setting
U462* Sync Window 2462	Index 1 Internal window [F1] Index 2 External window [F2] F1 < synchronizing difference < F2: If the synchronizing difference lies within the external window, synchronizing is effected in the shortest way. Synchronizing difference > F2: If the synchronizing difference lies outside the outer window, synchronizing is effected according to the selected mode in a certain direction. Synchronizing difference < F1: If the synchronizing difference lies within the inner window, no synchronizing movement takes place, synchronous message is effected immediately (B811) and the established synchronizing difference is calculated with the displacement. At window size 0, the internal window is deselected (only external window still active).	index1: 0 Min: 0 Max: 2147483647 Unit: - Indices: 2 Type: O4	Menus: - Parameter menu + Technology + Synchronism - Fixed settings - Upread/free access Changeable in: - Drive setting - Ready
U463* Q.GI.RLEnable 2463	Index 1: Binector source for release speed positive Index 2: Binector source for release speed negative	index1: 1 Unit: - Indices: 2 Type: L2 ,B	Menus: - Parameter menu + Technology + Synchronism - Upread/free access Changeable in: - Drive setting
U464* Q.GI.EnableSet 2464	Index 1: Binector source for release displacement angle setting Index 2: Binector source for adding remaining distance to current displacement	index1: 1 Unit: - Indices: 2 Type: L2 ,B	Menus: - Parameter menu + Technology + Synchronism - Upread/free access Changeable in: - Drive setting
n465 DispSpeed 2465	Show current positioning speed in percent referred to U697.2 [in function diagram 841]	Dec.Plc.: 3 Unit: % Indices: - Type: I4	Menus: - Parameter menu + Technology + Synchronism - Upread/free access
n466 Displ_Act_Resid 2466	Visualization parameter for offset angle setting [in function diagram 841] Index 1: Remaining offset path (KK827) Index 2: Current offset (KK812)	Dec.Plc.: 0 Unit: - Indices: 2 Type: O4	Menus: - Parameter menu + Technology + Synchronism - Upread/free access

Parameter	Description	Data	Read/write
U467* PosCorrection 2467	Parameter for position correction Function diagram [843.5] Index 1: Correction speed [1000LU/min] Index 2: Acceleration [1000LU/sec^2]	index1: 0,00 Min: 0,00 Max: 20000000,00 Unit: - Indices: 2 Type: O4	Menus: - Parameter menu + Technology + Synchronism - Upread/free access Changeable in: - Drive setting - Ready
U468* PosCorrVFactor 2468	Speed adjustment in percent for U467.1	Init: 1 Unit: - Indices: - Type: L2 ,K ,K	Menus: - Parameter menu + Technology + Synchronism - Upread/free access Changeable in: - Drive setting
U469* Q.EHlEncoder2 LU 2469	Connector inputs of the 2nd single ramp generator (32Bit) Index 1: Source for 16 bit value Index 2: Source for 32 bit value Index 3: Source for setting value [Function diagram 786b]	index1: 0 Unit: - Indices: 3 Type: L2 ,K ,K	Menus: - Parameter menu + Free blocks - Upread/free access Changeable in: - Drive setting
U470* Q.EHlEncoder2 S 2470	Binector sources of the 2nd single ramp generator (32Bit) Index 1: Selection DeltaLU Index 2: MOP enable Index 3: MOP + Index 4: MOP - Index 5: Set output [Function diagram 786b]	index1: 0 Unit: - Indices: 5 Type: L2 ,B	Menus: - Parameter menu + Free blocks - Upread/free access Changeable in: - Drive setting
U471* EHlEncod2 DeltaL 2471	Parameter Delta LU for 2nd single ramp function generator (32Bit) Index 1: Delta LU1 Index 2: Delta LU2 [Function diagram 786b]	index1: 0 Min: 0 Max: 2147483647 Unit: - Indices: 2 Type: O4	Menus: - Parameter menu + Free blocks - Upread/free access Changeable in: - Drive setting - Ready
U472* EHlEncoder2 LU 2472	Parameter input LU for 2nd single ramp generator (32Bit) Index 1: Upper limit Index 2: Lower limit Index 3: Fixed setpoint setting value [Function diagram 786b]	index1: 2147483647 Min: - 2147483647 Max: 2147483647 Unit: - Indices: 3 Type: I4	Menus: - Parameter menu + Free blocks - Upread/free access Changeable in: - Drive setting - Ready
U473 Actval.Wndow Tab 2473	Window for actual value control (table). Permits an overshoot of the master setpoint into the negative range during actual value control. Valid for cam mode: stop at end of table.	Init: 0 Min: 0 Max: 2147483647 Unit: - Indices: - Type: I4	Menus: - Parameter menu + Technology + Synchronism - Upread/free access Changeable in: - Drive setting - Ready

Parameter	Description	Data	Read/write
U475* Conf Eng/Diseng 2475	Configuration of the engaging/disengaging action Standard configuration - value 0: The position at which the constant travel phase of the engaging action is finished can be obtained from the engaging position and the engaging/disengaging length. The disengaging position is not taken into account. Special configuration - value 1: The position at which the constant travel phase of the engaging action is finished is only determined by the disengaging position. The engaging/disengaging length is not taken into account, but it must be set greater than the desired total length of the acceleration/deceleration ramp. In function diagram 834a	Init: 0 Unit: - Indices: - Type: L2	Menus: - Parameter menu + Technology + Synchronism - Upread/free access Changeable in: - Drive setting
U476 PRBS Shiftdiv. 2476	Shift division for weakening the signal amplitude before summation Index 1: channel 1 Index 2: channel 2	index1: 0 Min: 0 Max: 10 Unit: - Indices: 2 Type: O2	Menus: - Parameter menu - Upread/free access Changeable in: - Drive setting
U477* PRBS Ampl. 2477	Function parameter for amplitude input for the white noise produced by the noise generator.	Init: 1,00 Min: 0,00 Max: 100,00 Unit: % Indices: - Type: O2	Menus: - Parameter menu - Upread/free access Changeable in: - Drive setting - Ready
U478* PRBS cycles 2478	Number of noise cycles	Init: 20 Min: 0 Max: 200 Unit: - Indices: - Type: O2	Menus: - Parameter menu - Upread/free access Changeable in: - Drive setting - Ready
n479 PRBS Cycles CntD 2479	Monitoring parameter for the number of noise generator cycles still to be processed	Dec.Plc.: 0 Unit: - Indices: - Type: O2	Menus: - Parameter menu - Upread/free access - Drive setting
U480* SrcTraceInput 2480	BICO parameter for selecting the connectors to be recorded by the trace function. Indices: Index = channel number	index1: 0 Unit: - Indices: 8 Type: L2 ,K ,K	Menus: - Parameter menu + Diagnostics + Trace - Upread/free access Changeable in: - Power section definition - Board configuration - Drive setting - Drive setting - Ready
U481* Trace DoubleWord 2481	Function parameter for entering the word length of the connector indicated in U2480 to be recorded by the trace function. It is only possible to change the parameter if the trace function is not active (U488 = 0). If the parameter is changed, an output of previously recorded values for concerned channels is no longer possible. Parameter values: 0 = Word (16 bit) 1 = Double word (32 bit) Indices: Index = channel number	index1: 0 Min: 0 Max: 1 Unit: - Indices: 8 Type: O2	Menus: - Parameter menu + Diagnostics + Trace - Upread/free access Changeable in: - Power section definition - Board configuration - Drive setting - Drive setting - Ready

Parameter	Description	Data	Read/write
U482* TraceSampleTime 2482	Function parameter for entering the sampling time with which the trace values are to be recorded in integral multiples of the basic sampling time of the trace function. Indices: Index = channel number	index1: 1 Min: 1 Max: 200 Unit: - Indices: 8 Type: O2	Menus: - Parameter menu + Diagnostics + Trace - Upread/free access Changeable in: - Power section definition - Board configuration - Drive setting - Drive setting - Ready
U483* SrcTriggerInput 2483	BICO parameter for selecting the connector to be used by the trace function as a trigger Indices: Index = channel number	index1: 0 Unit: - Indices: 8 Type: L2 ,K ,K	Menus: - Parameter menu + Diagnostics + Trace - Upread/free access Changeable in: - Power section definition - Board configuration - Drive setting - Drive setting - Ready
U484 TriggerThresh 2484	Function parameter for entering the trigger threshold. The parameter value has to be entered in the format of a double-word connector. If bit trigger (U485 <> 16) is set, only the parameter values 0 and 1 are permissible. Indices: Index = channel number	index1: 0 Min: -2147483647 Max: 2147483647 Unit: - Indices: 8 Type: I4	Menus: - Parameter menu + Diagnostics + Trace - Upread/free access Changeable in: - Power section definition - Board configuration - Drive setting - Drive setting - Ready
U485* TriggerBitNo. 2485	Function parameter for entering the position of the bit to be triggered (in the case of bit trigger). A bit trigger can only be set if the trigger threshold (U484) has the values 0 or 1. If a bit trigger is set, the trigger condition (U486) is automatically adjusted to 1 (trigger if trigger input = trigger threshold). Parameter values: 0 to 15: Position of the bit (bit trigger) 16: No bit trigger Indices: Index = channel number	index1: 16 Min: 0 Max: 16 Unit: - Indices: 8 Type: O2	Menus: - Parameter menu + Diagnostics + Trace - Upread/free access Changeable in: - Power section definition - Board configuration - Drive setting - Drive setting - Ready
U486* TriggerCondition 2486	Function parameter for entering the trigger condition If a bit trigger (U485) is set, only parameter value 1 is permissible. If parameter values 3, 5 and 6 are set, parameters U483, U484 are not significant. In the case of parameter values 5 and 6, parameter U489 is used for the trigger condition. Parameter value 0 = Trigger if trigger input < trigger threshold 1 = Trigger if trigger input = trigger threshold 2 = Trigger if trigger input > trigger threshold 3 = Trigger if fault 4 = Trigger if trigger input <> trigger threshold 5 = Trigger if binector trigger input = 1 6 = Trigger if binector trigger input = 0 Indices: Index = channel number	index1: 0 Min: 0 Max: 6 Unit: - Indices: 8 Type: O2	Menus: - Parameter menu + Diagnostics + Trace - Upread/free access Changeable in: - Power section definition - Board configuration - Drive setting - Drive setting - Ready

Parameter	Description	Data	Read/write
U487* PreTrigger 2487	Function parameter for entering the size of the pretrigger. Parameter value: Relation of the number of data recorded before the trigger event to the total number as a percentage. Example: 40 % means that 40% of the data in the trace buffer were recorded before the trigger event and 60% after the trigger event. Indices: Index = channel number	index1: 0 Min: 0 Max: 100 Unit: % Indices: 8 Type: O2	Menus: - Parameter menu + Diagnostics + Trace - Upread/free access Changeable in: - Power section definition - Board configuration - Drive setting - Drive setting - Ready
U488* TraceStatusStart 2488	Function/visualization parameter of the trace status. The trace consists of a maximum of 8 channels corresponding to Indices 1 to 8.The trace memory is dynamically distributed according to the number of channels activated. Only parameter values 0 and 1 can be set. If the parameter value is set from 0 to 1, all recorded data of all channels are lost (because the whole trace memory is erased) and the trace is activated for this channel. If the trigger condition is satisfied and another channel is in the process of recording (parameter value 2), no further channel can be activated (parameter value 1). Parameter values: 0 = Trace not active/recording finished 1 = Trace active/trace is waiting for trigger event 2 = Trace is recording Indices: Index = channel number	index1: 0 Min: 0 Max: 2 Unit: - Indices: 8 Type: O2	Menus: - Parameter menu + Diagnostics + Trace - Upread/free access Changeable in: - Power section definition - Board configuration - Drive setting - Drive setting - Ready
U489* SrcBTriggerInput 2489	BICO parameter for selection of trace as trigger to binectors used. Indices: Index = channel number	index1: 0 Unit: - Indices: 8 Type: L2 ,B	Menus: - Parameter menu + Diagnostics + Trace - Upread/free access Changeable in: - Power section definition - Board configuration - Drive setting - Drive setting - Ready
U490 Trace D-BlockNo. 2490	Function parameter for entering the number of the trace data block for each trace channel. The trace data block can be read out via visualization parameters n491 to n498. Parameter value: 0 - 254: Output of corresponding data block 255: Output of trigger index Indices: Index = channel number	index1: 0 Min: 0 Max: 255 Unit: - Indices: 8 Type: O2	Menus: - Parameter menu + Diagnostics + Trace - Upread/free access Changeable in: - Power section definition - Board configuration - Drive setting - Drive setting - Ready

Parameter	Description	Data	Read/write
n491 TraceData Ch1 2491	Visualization parameter for displaying a data block of the trace data of channel 1. The block number of the trace data is set in parameter U490.01. If all values of the array are requested with one task via an automation interface (SCom1, SCom2, SCP, DPR), the parameter U490.01 is automatically increased by 1 when output in order to enable optimum read-out of the trace data. Indices: 1: Block ID High byte: Data block number (U490) Low byte: Number of trace data in data block 2-.100: Trace data When recording double-word connectors first the high word appears and then the low word.	Dec.Plc.: 0 Unit: - Indices: 100 Type: O2	Menus: - Parameter menu + Diagnostics + Trace - Upread/free access
n492 TraceData Ch2 2492	Description see n491	Dec.Plc.: 0 Unit: - Indices: 100 Type: O2	Menus: - Parameter menu + Diagnostics + Trace - Upread/free access
n493 TraceData Ch3 2493	Description see n491	Dec.Plc.: 0 Unit: - Indices: 100 Type: O2	Menus: - Parameter menu + Diagnostics + Trace - Upread/free access
n494 TraceData Ch4 2494	Description see n491	Dec.Plc.: 0 Unit: - Indices: 100 Type: O2	Menus: - Parameter menu + Diagnostics + Trace - Upread/free access
n495 TraceData Ch5 2495	Description see n491	Dec.Plc.: 0 Unit: - Indices: 100 Type: O2	Menus: - Parameter menu + Diagnostics + Trace - Upread/free access
n496 TraceData Ch6 2496	Description see n491	Dec.Plc.: 0 Unit: - Indices: 100 Type: O2	Menus: - Parameter menu + Diagnostics + Trace - Upread/free access
n497 TraceData Ch7 2497	Description see n491	Dec.Plc.: 0 Unit: - Indices: 100 Type: O2	Menus: - Parameter menu + Diagnostics + Trace - Upread/free access
n498 TraceData Ch8 2498	Description see n491	Dec.Plc.: 0 Unit: - Indices: 100 Type: O2	Menus: - Parameter menu + Diagnostics + Trace - Upread/free access

Parameter	Description	Data	Read/write
n500 Diag.MachData 2500	If an error is detected during transfer of the machine data, the lower-value 3 decimal places of the error number are displayed at this parameter. Error number = 2000 + value (n500) The explanations relating to the error numbers can be found in the Technology Manual F01 in Section 4, Annex A2 "Error Messages of the Technology for Task Management". The Technology Manual can be found on the CD enclosed with the converter (under\GMC\GMC-Dokumentation\English\P7MC17CA.pdf) If the data is transferred without any error, the value zero is displayed.	Dec.Plc.: 0 Unit: - Indices: - Type: O2	Menus: - Parameter menu + Technology + Positioning - Upread/free access

Parameter	Description	Data	Read/write
U501* Mach Data 2501	The number of the machine data corresponds to the index number, e.g. MD30 = U501.30. Activation of machine data is effected in U502 and when the electronic power supply is energized. Function diagram [804] MD1 : Position encoder type /axis type 0=Axis does not exist 1=Axis with incremental position encoder 2=Axis with absolute position encoder 3=Roll feeding MD2 : Axis assignment 1=X-axis 2=Y-axis 3=Z-axis 4=A-axis 5=B-axis 6=C-axis MD3 : Reference point coordinates -999 999.999 ... 999 999.999 [LU] MD4 : Reference point shift -999 999.999 ... 999 999.999 [LU] MD5 : Home position direction of approach 1=Home position to the right of the proximity switch 2=Home position to the left of the proximity switch 3=Set home position MD6 : Home position reducing speed 1 ... 1000 [1000*LU/min] MD7 : Home position starting speed 1 ... 1000 000 [1000*LU/min] MD8 : 0= Homing with Bero and zero mark 1= Homing with Bero only 2= Homing with zero mark only MD9 : Reserved MD10: Position encoder adjustment -999 999 999 ... 999 999 999 [LU] MD11: Linear/rotary axis 0 = linear axis Variable 0: Rotary axis length MD12: Limit switch negative -999 999 999 ... 999 999 999 [LU] MD13: Limit switch positive -999 999 999 ... 999 999 999 [LU] MD14: Following error monitoring, standstill 1 ... 99 999 [LU] MD15: Following error monitoring: traveling 1 ... 999 999 999 [LU] MD16: Position reached, time monitoring 10 ... 999 999 [ms] MD17: Position reached, exact hold window 1 ... 99 999 [LU] MD18: Acceleration 1 ... 99 999 [1000*ILU/s^2] MD19: Deceleration valid for BA setup, MDI, automatic, single set and slave 1 ... 99 999 [1000*ILU/s^2] MD20: Deceleration during collision 1 ... 99 999 [1000*LU/s^2] MD21: Jerk limiting positve for roll feeding 0=none, 1 ... 999 999 [1000*LU/s^3] MD22: Reserved MD23: Maximum traversing speed 1 ... 1 000 000 [1000*LU/min] MD24: M-function type of output 1= During positioning, time-controlled 2= During positioning, acknowledgement-controlled 3= Before positioning, time-controlled 4= Before positioning, acknowledgement-controlled 5= After positioning, time-controlled 6= After positioning, acknowledgement-controlled MD25: M-function output time 1 ... 99 999 [ms]	index1: 1 Min: -2147483647 Max: 2147483647 Unit: - Indices: 50 Type: I4	Menus: - Parameter menu + Technology + Positioning - Upread/free access Changeable in: - Drive setting - Ready

Parameter	Description	Data	Read/write

MD26: Time override
0=Time override active
1=Time override inactive
MD27: Reserved
MD28: Reserved
MD29: Acceleration breakpoint, speed for roll feeding
0=inactive, 1 ... 1 000 000[LU/min]
MD30: Deceleration breakpoint, speed for roll feeding
0=inactive, 1 ... 1 000 000[1000*LU/min]
MD31: Acceleration breakpoint, acceleration for roll feeding
0=inactive, 1 ... 99 999[1000*PFSF/min]
PFSF = position-feedback scaling factor
MD32: Deceleration breakpoint, deceleration for roll feeding
0=inactive, 1 ... 99 999[1000*PFSF/min]
PFSF = position-feedback scaling factor
MD33: Constant traversing time for roll feeding
1 ... 99 999[ms]
MD34: Pre-position reached - derivative time for roll feeding
1 ... 99 999[ms]
MD35: Pre-position reached - output time
1 ... 99 999[ms]
MD36: Acceleration overshoot during roll feeding
0 ... 100[%]
MD37: Performance after abort for roll feeding
0=Standard performance
1=Approach of the last target position without evaluation of the direction of movement
2=Approach of the last target position with evaluation of the direction of movement
MD38: Dead travel on reversing compensation
0 ... 9 999[LU]
MD39: Dead travel on reversing compensation preferable position (only for absolute position encoder)
1=Preferable position positive (during first positive traversing movement, no dead travel on reversing compensation is calculated)
2=Preferable position negative (during first negative traversing movement, no dead travel on reversing compensation is calculated)
MD40: Dead travel on reversing compensation - speed limitation
0 (inactive) ... 999(1000*LU/min]
MD41: Acceleration time operating mode "Control and homing procedure"
0 ... 99 999[ms]
MD42: Deceleration time operating mode "Control and homing and synchronizing procedure"
0 ... 99 999[ms]
MD43: Deceleration time during errors e.g. if following error > MD15
0 ... 99 999[ms]
MD44: External record change - setting
0=Alarm at end of positioning record
1=no alarm at end of positioning record
MD45: Digital inputs - function 1
0=without function
1=Start OR linked
2=Start AND linked
3=Position-feedback setting on the fly
4=External record change
5=Flying measurement
6=Collision
7=Proximity switch for homing procedure
9=Read-in enable, externally program-dependent
MD46: Digital inputs - function 2
0=without function

Parameter	Description	Data	Read/write
	1=Inhibit actual-value 2=External read-in enable 3=External read-in enable AND linked MD47: Digital outputs - function 1 0=without function 1=Destination reached and stationary (DRS) 2=Axis travels forwards (FWD) 3=Axis travels backwards (BWD) 4=M-change of M97 5=M-change of M98 6=Start enable MD48: Digital outputs - function 2 0=without function 1=Constant travel 2=Acceleration 3=Deceleration 4=Acceleration or deceleration 5=Pre-position reached MD49: Influence of speed pre-control 0 ... 150 [%] The internally calculated speed setpoint is multiplied by this factor before it is output at K312. MD50: Influence of acceleration pre-control. . The internally calculated acceleration pre-control is divided by this value before it is output at the connector KK313 as a percentage quantity. 0= Acceleration pre-control disabled 1 ... 99 999 [1000*LU/s^2]		
U502* MD Activation 2502	The machine data are adopted by parameter U501 with an edge of 1 to 2 or after board run-up. After this, the parameter value is automatically reset to 0, or to 1 if the machine data are incorrect. If the machine data are incorrect, acceptance of the data is refused and an alarm message is tripped in n500. U502=0: Maschine data O.K. U502=1: Maschine data were changed and net yet transferred or the check revealed an error (error status in n500) U502=2: Command for checking and transferring machine data; if the machine data are o.k. the value "0" is automatically entered in U502 as acknowledgement. If the machine data are not o.k. U502 automatically jumps back to the value "1" Function diagram [804]	Init: 0 Min: 0 Max: 2 Unit: - Indices: - Type: O2	Menus: - Parameter menu + Technology + Positioning - Upread/free access Changeable in: - Drive setting - Ready
U503* SimulationOper 2503	With the aid of simulation, positioning can also be operated without the need for the drive to rotate. In this way, the interaction of the control signals and checkback signals can be tested. Function diagram [802]	Init: 2 Min: 1 Max: 2 Unit: - Indices: - Type: O2	Menus: - Parameter menu - Upread/free access Changeable in: - Drive setting - Ready
U504* Function Param 2504	Function data: 1 to 10 FD 1 :reserved FD 2 :Window 1 (internal window) FD 3 :Window 2 (external window) FD 4 :Correction mode, setting reference point on the fly 0: Correction along shortest path 1: Positive correction only 2: Negative correction only FD 5 :reserved FD 6 :Limit value monitoring, encoder switchover FD 7 :reserved FD 8 :reserved FD 9 :reserved FD 10 :reserved	index1: 0 Min: - 2147483647 Max: 2147483647 Unit: - Indices: 10 Type: I4	Menus: - Parameter menu + Technology + Positioning - Upread/free access Changeable in: - Drive setting - Ready

Parameter	Description	Data	Read/write
U505* RoundingTime 2505	The parameter determines the smoothing time constant for positioning. With increasing smoothness, the speed characteristic is rounded off which thus protects the mechanical system. With the binary signal which can be assigned via parameter U512 (V1.50 and higher), rounding can be activated for the set-up operating mode.	Init: 0 Min: 0 Max: 10000 Unit: ms Indices: - Type: O2	Menus: - Parameter menu + Technology + Positioning - Upread/free access Changeable in: - Drive setting - Ready
U507* RollShiftLoop# 2507	Loop number for roll feeding in the MDI operating mode. Function diagram [830] With U507 it is possible to select how many roll feeding movements are to be carried out after setting the start command [STA]. These roll feeding movements start each time with a read-in enable [RIE]. A 0 ==>1 edge of the start command [STA] sets the loop counter n540.36 to the value parameterized in U507. After every feeding movement, the loop counter n540.36 is decremented. The value in U507 is not decremented; it remains as a setting value for the loop counter. U507=0: The loop counter is not active. The start command (0 => 1 edge of [STA]) only has to be given once. Then any given number of feeding movements can be carried out which are each started with a read-in enable [RIE]. The checkback signal "Function terminated" [FUT] is not output. The end of a feeding movement is indicated in each case by the bit "Destination reached and stationary" [DRS]. U507=1: The loop counter is active. Its setting value is 1. After the start command (0 => 1 edge of [STA], the read-in enable [RIE] is only interrogated once. [RIE] starts the feeding movement. The completion of the movement is signalled by the checkback bits "Destination reached and stationary" [DRS] and "Function terminated" [FUT]. When the start command [STA] is reset, [FUT] also returns to "0". A new start command is required for starting a new feeding movement. U501>1: The loop counter is active. After the start command (0 ==> 1 edge of [STA], the number of feeding movements parameterized in U507 is carried out, each started by a read-in enable [RIE]. The checkback bit "Function terminated" [FUT] is not set until the loop counter has been executed. When the start command [STA] is reset, [FUT] also returns to "0". Such a succession of feeding movements can be started again by a 0==>1 edge of the start command [STA]. The remaining number of loops to be executed in each case can be visualized at parameter n540.36.	Init: 0 Min: 0 Max: 999999999 Unit: - Indices: - Type: O4	Menus: - Parameter menu + Technology + Positioning - Upread/free access Changeable in: - Drive setting - Ready
U509* MDI Set Connect 2509	Parameter for selecting the binector from which changeover of the position for MDI is to be read in. If the binector is 0, the position from the MDI record is used. If the bit is 1, the position from the connector is used which is selected in U534. Function diagram [823.4]	Init: 0 Unit: - Indices: - Type: L2 ,B	Menus: - Parameter menu - Upread/free access Changeable in: - Drive setting
U510* FixStageSetting 2510	In Index 1, the set-up speed, stage 1 (control bit fast/slow [F_S]=0), and in index 2 the set-up speed, stage 2 (control bit fast/slow [F_S]=1) is displayed. The speed is in unit [1000*LU/min] Example: normalization to 1 µm: Enter in [mm/min] Function diagram [819.3]	index1: 1000,00 Min: 0,00 Max: 500000,00 Unit: mm/min Indices: 2 Type: O4	Menus: - Parameter menu - Upread/free access Changeable in: - Drive setting - Ready

Parameter	Description	Data	Read/write
U511* Setp Control 2511	The parameter defines the speed for the "Control and positioning" operating mode. The value is indicated in % of MD23. Index 1: Fixed stage 1 "Slow" (for control bit [F_S]=0) Index 2: Fixed stage 2 "Fast" (bei Steuerbit [F_S]=1) Function diagram [825.2]	index1: 10,00 Min: 0,00 Max: 100,00 Unit: % Indices: 2 Type: O2	Menus: - Parameter menu + Technology + Positioning - Upread/free access Changeable in: - Drive setting - Ready
U512* Q.RoundingSetup 2512	This binary signal can be used for activating the rounding time constant U505 in setup mode. 0: Inactive 1: Active	Init: 0 Unit: - Indices: - Type: L2 ,B	Menus: - Parameter menu - Upread/free access Changeable in: - Drive setting
U521* Zero Shift 2521	Zero shifts can be activated in "Automatic" mode by programming G54 to 59 in traversing programs.	index1: 0,000 Min: -999999,999 Max: 999999,999 Unit: mm Indices: 6 Type: I4	Menus: - Parameter menu - Upread/free access Changeable in: - Drive setting - Ready
U522* Tool Corr'n 2522	The tool corrections "Length"and "Wear" can be selected/deselected in Automatic mode by programming in a traversing program. A D-number and direction is programmed.	index1: 0,000 Min: -999999,999 Max: 999999,999 Unit: mm Indices: 40 Type: I4	Menus: - Parameter menu - Upread/free access Changeable in: - Drive setting - Ready
U525* Set Input 2525	Input of automatic records. _____ ATTENTION: U525 ... U527 ONLY FOR TEST PURPOSES and for access by the "Menu promted start up"!! The input of automatic records via parameters U525 ... U527 is intended for test purposes only and must only be carried out by SIEMENS system specialists! Use the record input via U571 ... U591, if you want to enter automatic records via a parameter dialog. _____ The program or record is always entered by means of the same record number. Sorting is carried out in the read/write routines. See parameter descriptions P2526 and P2527.	index1: 0 Min: 0 Max: 4294967295 Unit: - Indices: 6 Type: O4	Menus: - Parameter menu - Upread/free access Changeable in: - Drive setting - Ready

Parameter	Description	Data	Read/write
U526* AutoSetInp 2526	This parameter enables a traversing data set to be entered for the "Automatic" operating mode. The parameter indices have the following significance here: Index 1: Program number (1 ... 20) Index 2: Set number (1 ... 200) Index 3: continuation (0 ... 19) Index 4: 1st G-function Index 5: 2nd G-function Index 6: 3rd G-function Index 7: 4th G-function Index 8: Position setpoint (+/- 999 999 999) Index 9: Traversing speed (0 ... MD Vmax) Index 10: 1. M-number (0 ... 255) Index 11: 2. M-number (0 ... 255) Index 12: 3. M-number (0 ... 255) Index 13: D-number (0 ... 20) Index 14: UP-number (1 ... 20) Index 15: Loop number (1 ... 65535) All index values are zero in the presetting. Only the relevant data have to be entered. In connection with parameter U527, the following functions can be executed: U527=1 : Adoption of traversing data set from U526. After adoption, all indices of U526 are deleted. With U527=2 sets, programs and the entire program memory can be deleted. a) Deleting a traversing set: U526.01=Program number, U526.02=set number, U527=2 b) Deleting a traversing program: U526.01=program number, U526.02=255, U527=2 c) Deleting the entire program memory: U526.01=255, U526.02=255, U527=2 U527=3: Teach in: The current position is stored in the set which is selected with U526 and U527. U527=4: Acknowledgement of the positioning-specific fault messages. See parameter descriptions of P2525, P2527 .	index1: 0 Min: -2147483647 Max: 2147483647 Unit: - Indices: 15 Type: I4	Menus: - Parameter menu + Technology + Positioning - Upread/free access Changeable in: - Drive setting - Ready
U527* AutoSetAdopt 2527	With value 1, the automatic set is adopted from parameter U526 is adopted. With parameter value = 2, this set is deleted. With defined values, the following functions can also be tripped: 1. Delete set list 2. Delete program 3. Delete set. See parameter descriptions P2525 and P2526.	Init: 0 Min: 0 Max: 9 Unit: - Indices: - Type: O2	Menus: - Parameter menu + Technology + Positioning - Upread/free access Changeable in: - Drive setting - Ready
U528* Q.Encoder Select 2528	Selection of the encoder for position control in the case of the encoder switchover roll feed function: 0: Position control with external encoder 1: Position control with motor encoder	Init: 0 Unit: - Indices: - Type: L2 ,B	Menus: - Parameter menu - Upread/free access Changeable in: - Drive setting

Parameter	Description	Data	Read/write
U529* Src PosActV ok 2529	Parameter defines the source for the status bit "Position actual value valid". If the status bit is 1, the positioning function receives a signal that valid measured values have been supplied by the position sensing. Function diagram [815.4]	Init: 70 Unit: - Indices: - Type: L2 ,B	Menus: - Parameter menu + Technology + Positioning - Upread/free access Changeable in: - Drive setting
U530* Src CtrlSignals 2530	Parameter which selects the source for the control signals of positioning. The control signals consist of a 32-bit double-word. Function diagram [809.7]	Init: 860 Unit: - Indices: - Type: L2 ,K ,K	Menus: - Parameter menu + Technology + Synchronism + Positioning - Upread/free access Changeable in: - Drive setting
U531* Src GFuncMDI 2531	Parameter for selecting the connector from which the G-function for the MDI record 0 is to be read in. For specifying the traversing data set via connectors, the same setting rules apply as in the case of traversing data sets via parameter U550 ff, with the exception that the G functions are coded hexadecimally instead of decimally (e.g. absolute traversing with 100% acceleration ==> by U531 selected connector = 5A1E (hex) ==> parameter U 550.2...U59.2= 9030 (dec). Function diagram [823.4]	Init: 0 Unit: - Indices: - Type: L2 ,K	Menus: - Parameter menu + Technology + Positioning - Upread/free access Changeable in: - Drive setting
U532* Src Position MDI 2532	Parameter for selecting the connector from which the position (F-function) for the MDI record 0 is to be read in. For specifying the traversing data set via connectors, the same setting rules apply as in the case of traversing data sets via parameter U550 ff. Function diagram [823.5]	Init: 0 Unit: - Indices: - Type: L2 ,K ,K	Menus: - Parameter menu + Technology + Positioning - Upread/free access Changeable in: - Drive setting
U533* Src Speed MDI 2533	Parameter for selecting the double connector from which the speed for the MDI record 0 is to be read in. For specifying the traversing data set via connectors, the same setting rules apply as in the case of traversing data sets via parameter U550 ff. Function diagram [823.6]	Init: 0 Unit: - Indices: - Type: L2 ,K ,K	Menus: - Parameter menu + Technology + Positioning - Upread/free access Changeable in: - Drive setting
U534* Src PosVarMDI 2534	Parameter for selecting the double connector from which the variable position for the MDI record is to be read in. Changeover to the variable position is made via parameter U509. Function diagram [823.4]	Init: 0 Unit: - Indices: - Type: L2 ,K ,K	Menus: - Parameter menu + Technology + Positioning - Upread/free access Changeable in: - Drive setting
U535* Src PosActV 2535	Parameter for selecting the connector from which the position actual-value is to be read in. Index 1: Position actual-value from a motor encoder (KK120) Index 2: Position actual-value from a machine encoder (KK125). Function diagram [815.4]	index1: 0 Unit: - Indices: 2 Type: L2 ,K ,K	Menus: - Parameter menu + Technology + Synchronism + Positioning - Upread/free access Changeable in: - Drive setting

Parameter	Description	Data	Read/write
U536* SrcQuickInp 2536	Parameter for selecting the binector from which the fast digital input signals E1 ... E6 for positioning are to be read. 6 fast signals can be defined. The function of these fast signals is determined via MD45 (U501.45) and MD46 (U501.46). Function diagram [813.1]	index1: 0 Unit: - Indices: 6 Type: L2 ,B	Menus: - Parameter menu - Upread/free access Changeable in: - Drive setting
U537* Src TechInputs.P 2537	The parameter defines the source for the technological inputs for positioning. Checkback signals from the basic functions are softwired to these inputs. The following softwiring is expected Index 01: Only used for test purposes. Index 02: Checkback - "Homing position detected" (Motor encoder: B210) (external machine encoder: B215) Index 03: Only used for test purposes. Function diagram [815.4]	index1: 0 Unit: - Indices: 3 Type: L2 ,B	Menus: - Parameter menu - Upread/free access Changeable in: - Drive setting
U538* SrcMVal Valid 2538	The parameter defines the source for the checkback of position sensing that a valid position measured value is available. The binector is set by position sensing if, e.g., a printing index is detected. The following sources are available: 1. Position sensing with motor encoder: B212 2. Position sensing with external machine encoder: B217 Function diagram [815.4]	Init: 212 Unit: - Indices: - Type: L2 ,B	Menus: - Parameter menu - Upread/free access Changeable in: - Drive setting
U539* Src Mvalue 2539	Parameter defines the source for the position measured value. The measured value is provided by the position sensing, e.g. - KK122 from motor encoder in slot c - KK127 from external machine encoder Function diagram [815.4]	Init: 0 Unit: - Indices: - Type: L2 ,K ,K	Menus: - Parameter menu - Upread/free access Changeable in: - Drive setting

Parameter	Description	Data	Read/write
n540 DiagnoseDat.P 2540	The parameter is used for diagnosis of positioning. The individual indices contain the following information: General diagnostic information _____ 01: Position setpoint 1 - The position setpoint to be approached (final value incl. correction values) [817.6] 02: Position setpoint 2 (final value without correction values): 03: Position actual value 1 (value from position sensing) [815.4] 04: Position actual value 2 (correction values taken out of the calculation) 05: Following error [818.5] 06: Following error limit The currently permissible max. following error is displayed here, i.e. during traversing MD15 and in standstill MD14 07: Following error The following error is displayed here which occurs upon response of the following error monitoring (A141, A142), i.e. the sign-correct difference between position setpoint and actual value 08: Remaining traversing distance 09: Position measured value from measured value memory of position sensing [815.4] 10: Speed 11: Current override [809.8] 12: Position setpoint for MDI (is only updated if the MDI operating mode is active). 13: Number of selected MDI record [823.7] 14: Specified operating mode [MODE_IN] 15: Active (checked-back) operating mode [MODE_OUT] Diagnostic informationen for automatic mode [826] --- --- 16: Program number level 0 (main program) 17: Record number level 0 18: Program number subprogram level 1 19: Record number level 1 20: Remaining loop number level 1 21: Program number subprogram level 2 22: Record number level 2 23: Remaining loop number level 2 24: Decoding error program 25: Decoding error record Fault memory for positioning alarms A129...A255 --- --- The latest positioning alarm is in n540.26 [818] 26: Positioning fault memory 1 27: Positioning fault memory 2 28: Positioning fault memory 3 29: Positioning fault memory 4 30: Positioning fault memory 5 31: Positioning fault memory 6 32: Positioning fault memory 7 33: Positioning fault memory 8 Various diagnostic information --- 34: M-function number 1 [811.4] 35: M-function number 2 [811.4] 36: Remaining loop number for roll feeding [830]	Dec.Plc.: 0 Unit: - Indices: 40 Type: I4	Menus: - Parameter menu + Technology + Positioning - Upread/free access

Parameter	Description	Data	Read/write
	(Loop counter for roll feeding in MDI operating mode, setting value: see U507) 37: Current acceleration pre-control value [817.5] (not yet implemented in V1.2) 38: Current speed pre-control value [817.5] (from V1.4 onwards) 39 to 40: reserved		
n541 CW SW Pos 2541	The parameter shows the status of the control and checkback signals of positioning. Index 1: Low word of the positioning control signals [809.7] Index 2: High word of the positioning control signals [809.7] Index 3: Low word of the positioning status word KK315 [811.7] Index 4: High word of the positioning status word KK315 [811.7]	Dec.Plc.: 0 Unit: - Indices: 4 Type: V2	Menus: - Parameter menu + Technology + Positioning - Upread/free access
n542 InpOutp Pos 2542	The parameter shows the status of the fast digital inputs and outputs of positioning: Index 1: Digital inputs E1 ... E6 for positioning [813.1] Index2: Digital outputs A1 ... A6 for positioning [813.8]	Dec.Plc.: 0 Unit: - Indices: 2 Type: V2	Menus: - Parameter menu + Technology + Positioning - Upread/free access
U545* OP Input 2545	The parameter represents the interface of the MASTERDRIVES MC unit for the SIMATIC OP operator control interface. The parameter is set by the SIMATIC GMC software and must not be altered manually.	index1: 0 Min: -2147483648 Max: 2147483647 Unit: - Indices: 50 Type: I4	Menus: - Parameter menu + Technology + Synchronism + Positioning - Upread/free access Changeable in: - Drive setting - Ready
n546 OP Output 2546	The parameter represents the interface of the MASTERDRIVES MC for the OP operator control interface.	Dec.Plc.: 0 Unit: - Indices: 50 Type: I4	Menus: - Parameter menu + Technology + Synchronism + Positioning - Upread/free access

Parameter	Description	Data	Read/write
U550* MDI Set 1 2550	_____ Specification of the fixed MDI traversing data record No. 1 ... 10 via parameters U550 ... 559 _____ Specification of MDI traversing data record No. 1. This MDI record belongs to the 10 fixed positioning records stored as parameters which can be selected via the bits 8...11 of the positioning control word [809]. An MDI traversing data record is split up into 3 indices: Index 1: G-functions The value consists of two G-functions: 1st G-function: positioning type Value 90 ==> G90: Absolute measure (absolute positioning) G91: String measure (relative positioning) Value 91 ==> G91: incremental dimension 2nd G-function: Acceleration override (weakening factor for the acceleration/deceleration values specified in MD18 and MD19 This weakening factor can be adjusted in 10% increments of 10% to 100%.) Value 30 ==> G30 ==> 100% Override Value 31 ==> G31 ==> 10% Override to Value 39 ==> G39 ==> 90% Override Example: U511.1=9030 ==> Positioning type = G90 = absolute measure ==> Acceleration override = G30 = 100% Index 2: Position setpoint The value is preset in the length unit LU which was defined by the actual value weighting factor in position sensing. (e.g. P169 and P170 for motor encoder) Example: - Position setpoint 123,5mm has to be set - Length unit is LU=0.001mm ==> U550.2=123500 Index 3: Traversing speed The traversing speed is specified in the unit [10*LU/min]. Example: - The speed 5000 mm/min has to be set - Length unit is 0.1 mm ==> U550.3=5000 Function diagram 823	index1: 9030 Min: -2147483647 Max: 2147483647 Unit: - Indices: 3 Type: I4	Menus: - Parameter menu + Technology + Positioning + Setting up/MDI - Upread/free access Changeable in: - Drive setting - Ready
U551* MDI Set 2 2551	Setting of MDI traversing data record 2, description see U550 Function diagram [823]	index1: 9030 Min: -2147483647 Max: 2147483647 Unit: - Indices: 3 Type: I4	Menus: - Parameter menu + Technology + Positioning + Setting up/MDI - Upread/free access Changeable in: - Drive setting - Ready

Parameter	Description	Data	Read/write
U552* MDI Set 3 2552	Setting of MDI traversing data record 3, description see U550. Function diagram [823]	index1: 9030 Min: -2147483647 Max: 2147483647 Unit: - Indices: 3 Type: I4	Menus: - Parameter menu + Technology + Positioning + Setting up/MDI - Upread/free access Changeable in: - Drive setting - Ready
U553* MDI Set 4 2553	Setting of MDI traversing data record 4, description, see U550 Function diagram [823]	index1: 9030 Min: -2147483647 Max: 2147483647 Unit: - Indices: 3 Type: I4	Menus: - Parameter menu + Technology + Positioning + Setting up/MDI - Upread/free access Changeable in: - Drive setting - Ready
U554* MDI Set 5 2554	Setting of MDI traversing data record 5, description see U550 Function diagram [823]	index1: 9030 Min: -2147483647 Max: 2147483647 Unit: - Indices: 3 Type: I4	Menus: - Parameter menu + Technology + Positioning + Setting up/MDI - Upread/free access Changeable in: - Drive setting - Ready
U555* MDI Set 6 2555	Setting of MDI traversing data record 6, description see U550 Function diagram [823]	index1: 9030 Min: -2147483647 Max: 2147483647 Unit: - Indices: 3 Type: I4	Menus: - Parameter menu + Technology + Positioning + Setting up/MDI - Upread/free access Changeable in: - Drive setting - Ready
U556* MDI Set 7 2556	Setting of MDI traversing data record 7, description see U550 Function diagram [823]	index1: 9030 Min: -2147483647 Max: 2147483647 Unit: - Indices: 3 Type: I4	Menus: - Parameter menu + Technology + Positioning + Setting up/MDI - Upread/free access Changeable in: - Drive setting - Ready
U557* MDI Set 8 2557	Setting of MDI traversing data record 8, description see U550 Function diagram [823]	index1: 9030 Min: -2147483647 Max: 2147483647 Unit: - Indices: 3 Type: I4	Menus: - Parameter menu + Technology + Positioning + Setting up/MDI - Upread/free access Changeable in: - Drive setting - Ready
U558* MDI Set 9 2558	Setting of MDI traversing data record 9, description see U550. Function diagram [823]	index1: 9030 Min: -2147483647 Max: 2147483647 Unit: - Indices: 3 Type: I4	Menus: - Parameter menu + Technology + Positioning + Setting up/MDI - Upread/free access Changeable in: - Drive setting - Ready

Parameter	Description	Data	Read/write
U559* MDI Set 10 2559	Setting of MDI traversing data record 10, description see U550. Function diagram [823]	index1: 9030 Min: -2147483647 Max: 2147483647 Unit: - Indices: 3 Type: I4	Menus: - Parameter menu + Technology + Positioning + Setting up/MDI - Upread/free access Changeable in: - Drive setting - Ready
U571* Program Number 2571	_____ Entering and editing of automatic traversing programs ---------- via parameters U571 ... U591; See function diagram 828 Proceed as follows to enter or edit an automatic record: 1) Enter program number. 2) Enter record number. The selected record is now available in the editing buffer (RAM) to be observed and changed via parameters U574...U585.. 3) Via U574...U585 you can now look at the desired record components and modify them. 4) Select at U590 which program action you want to carry out with the record in the editing buffer, e.g. delete record, delete program, transfer record from the editing buffer into the no-volatile automatic program memory (EEPROM) or 5) Carry out the error check at U591. _____ U571= Program number 1 .... 21 Value 1... 20: Traversing program number Value 21 : Automatic individual record Value 255 : Delete program See parameter description see U590	Init: 0 Min: 0 Max: 65535 Unit: - Indices: - Type: O2	Menus: - Parameter menu + Technology + Positioning - Upread/free access Changeable in: - Drive setting - Ready
U572* Set Number 2572	Record number Index 1: Mask out record yes/no Value 0: Do not mask out record (normal case) Value 1: Mask out record (special case) Index 2: Value 1...200: Record number (0 ... 200); the quantity (but not the numbers) of the positioning records is limited to 50. Value 255: Delete program (description see U590) When the program number and record number are entered, an existing record is transferred to parameters U571 to U585 for editing. See function diagram 828.	index1: 0 Min: 0 Max: 65535 Unit: - Indices: 2 Type: O2	Menus: - Parameter menu + Technology + Positioning - Upread/free access Changeable in: - Drive setting - Ready
U573* Set Cont No. 2573	Record continuation number 0: No record continuation 1...19: Continuation number The last record must always be concluded with continuation number 0.	Init: 0 Min: 0 Max: 65535 Unit: - Indices: - Type: O2	Menus: - Parameter menu + Technology + Positioning - Upread/free access Changeable in: - Drive setting - Ready

Parameter	Description	Data	Read/write
U574* G-Function 1 2574	Definition of the first G-function of the traversing data record: Index 1: G-function 1 exists yes/no Value=0: G-function 1 does not exist Value=1: G-function 1 exists in Index 2 Index 2: G-function 1 (e.g. value=90 : G90 = Absolute positioning)	index1: 0 Min: 0 Max: 65535 Unit: - Indices: 2 Type: O2	Menus: - Parameter menu + Technology + Positioning - Upread/free access Changeable in: - Drive setting - Ready
U575* G-Function 2 2575	Definition of the second G-function of the traversing data record: Index 1: G-function 2 exists yes/no Value=0: G-function 2 does not exist Value=1: G-function 2 exists in Index 2. Index 2: G-function 2	index1: 0 Min: 0 Max: 65535 Unit: - Indices: 2 Type: O2	Menus: - Parameter menu + Technology + Positioning - Upread/free access Changeable in: - Drive setting - Ready
U576* G-Function 3 2576	Definition of the third G-function of the traversing data record Index 1: G-function 3 exists yes/no Value=0: G-function 3 does not exist Value=1: G-function 3 exists in Index 2 Index 2: G-function 3	index1: 0 Min: 0 Max: 65535 Unit: - Indices: 2 Type: O2	Menus: - Parameter menu + Technology + Positioning - Upread/free access Changeable in: - Drive setting - Ready
U577* G-Function 4 2577	Definition of the fourth G-function of the traversing data record Index 1: G-function 4 exists yes/no Value=0: G-function 4 does not exist Value=1: G-function 4 exists in Index 2 Index 2: G-function 4	index1: 0 Min: 0 Max: 65535 Unit: - Indices: 2 Type: O2	Menus: - Parameter menu + Technology + Positioning - Upread/free access Changeable in: - Drive setting - Ready
U578* Position 2578	Definition of the position setpoint or of the subprogram number. Index 1: Position or SP number exists yes/no Value=0: no position or SP number exists Value=1: Position setpoint in Index 2 exists Value=2: Subprogram exists in Index 2 Index 2: Position setpoint in [LU] or subprogram number	index1: 0 Min: - 999999999 Max: 999999999 Unit: - Indices: 2 Type: I4	Menus: - Parameter menu - Upread/free access Changeable in: - Drive setting - Ready
U579* Speed 2579	Definition of the traversing speed Index 1: Traversing speed in Index 2 valid or exists yes/no Value=0: Speed in Index 2 not valid Value=1: Speed in Index 2 valid Index 2: Traversing speed (0 ... 100 000 000 [100*LU/min]) see example under U550.03	index1: 0 Min: 0 Max: 100000000 Unit: - Indices: 2 Type: I4	Menus: - Parameter menu - Upread/free access Changeable in: - Drive setting - Ready
U580* M-Function 1 2580	Definition of the first M-function of the traversing data record Index 1: M-function 1 in Index 2 exists or is valid yes/no Value=0: M-function 1 in Index 2 not valid Value=1: M-function in Index 2 valid Index 2: M-function 1 (0 ... 255) e.g. value 18= M18= endless loop	index1: 0 Min: 0 Max: 65535 Unit: - Indices: 2 Type: O2	Menus: - Parameter menu + Technology + Positioning - Upread/free access Changeable in: - Drive setting - Ready

Parameter	Description	Data	Read/write
U581* M-Function 2 2581	Definition of the second M-function of the traversing data record Index 1: M-function 2 in Index 2 exists or is valid yes/no Value=0: M-function 2 in Index 2 not valid Value=1: M-function 2 in Index 2 valid Index 2: M-function 2 (0 ... 255)	index1: 0 Min: 0 Max: 65535 Unit: - Indices: 2 Type: O2	Menus: - Parameter menu + Technology + Positioning - Upread/free access Changeable in: - Drive setting - Ready
U582* M-Function 3 2582	Definition of the third M-function Index 1: M-function 3 in Index 2 exists or is valid yes/no Value=0: M-function 3 in Index 2 not valid Value=1: M-function 3 in Index 2 valid Index 2: M-function 3 (0 ... 255)	index1: 0 Min: 0 Max: 65535 Unit: - Indices: 2 Type: O2	Menus: - Parameter menu + Technology + Positioning - Upread/free access Changeable in: - Drive setting - Ready
U583* D-Number 2583	Definition of the D number (tool correction memory) Index 1: D-number in Index 2 exists or is valid yes/no Value=0: D-number in Index 2 not valid Value=1: D-number in Index 2 valid Index 2: D-number (tool memory) (0 ... 20) The contents of the tool corrections (length and wear) assigned to the D-numbers are defined in U522.	index1: 0 Min: 0 Max: 65535 Unit: - Indices: 2 Type: O2	Menus: - Parameter menu + Technology + Positioning - Upread/free access Changeable in: - Drive setting - Ready
U584* UP-Number 2584	Definition of the subprogram number Index 1: SP number in Index 2 exists or is valid yes/no Value=0: SP number in Index 2 not valid Value=1: SP number in Index 2 valid Index 2: SP number (1...20)	index1: 0 Min: 0 Max: 65535 Unit: - Indices: 2 Type: O2	Menus: - Parameter menu + Technology + Positioning - Upread/free access Changeable in: - Drive setting - Ready
U585* Loop Number 2585	Definition of the loop number Index 1: Loop number in Index 2 exists or is valid yes/no Value=0: Loop number in Index 2 not valid Value=1: Loop number in Index 2 valid Index 2: Loop number (0...65535)	index1: 0 Min: 0 Max: 65535 Unit: - Indices: 2 Type: O2	Menus: - Parameter menu + Technology + Positioning - Upread/free access Changeable in: - Drive setting - Ready
U590* AdoptSet 2590	Carry out program action with the positioning record entered in the editing buffer via U574...U585: Value=0: Action terminated/ no action active Value=1: Transfer record from editing buffer into automatic program memory (in the EEPROM) Value=2: Delete all records in all programs (Before initiating this program action, the value 255 has to be entered in parameters U571 and U572 Index 2 respectively) Value=3: Delete program (Before initiating this program action, the value 255 has to be entered in parameters U571 and U572 Index 2 respectively) Value=4: Delete record Value=5: Teach-in (adopting the current position in set-up mode [819]	Init: 0 Min: 0 Max: 65535 Unit: - Indices: - Type: O2	Menus: - Parameter menu - Upread/free access Changeable in: - Drive setting - Ready

Parameter	Description	Data	Read/write
n591 FaultMssg P 2591	The visualization parameter displays the present fault message of positioning. The value 2000 must be added to the displayed fault number. Please refer to Appendix A of the manual "Motion Control for MASTERDRIVES MC and SIMATIC M7" for a description of the fault messages. U591 is also used for checking a positioning record entered via U571...U90: U591=0 ==> No fault has occurred U591>0 ==> A fault has occurred with the fault number 2000+U591	Dec.Plc.: 0 Unit: - Indices: - Type: O2	Menus: - Parameter menu + Technology + Positioning - Upread/free access
U599* Dist Disp 2599	Significance: - Index 1: Length Resolution:Position of decimal point in length unit: 0 = 1 1 = 0.1 2 = 0.01 3 = 0.001 4 = 0.0001 - Index 2: Length Interpretation Physical unit of length: 0 = user-defined, 8 ASCII characters of the customer unit are in the index 3 ... 10 1 = mm 2 = Inch 3 = Degree - Index 3: User-defined text for unit of length (only relevant when Index 2 = 0): 1st ASCII character - Index 4: ditto, 2nd ASCII character ..... - Index 10: ditto, 8th ASCII character	index1: 3 Min: 0 Max: 255 Unit: - Indices: 10 Type: O2	Menus: - Parameter menu - Upread/free access Changeable in: - Drive setting - Ready

Parameter	Description	Data	Read/write
U600* Src RecomV Sync 2600	The parameter defines the connector from which the master setpoint for synchronism is to be read. Three sources can be indicated which can be changed over via parameter U606. Function diagram [834.1] The following sources are practical as input connectors: 1.) Use of the virtual master axis The virtual master axis (output connector KK817) is connected to the synchronism via the SIMOLINK receive buffer, e.g. connector KK7031. Thus no dead time differences occur between the drives connected at the virtual master axis. Example: P751.01=817 P751.02=817 ==> The output of the virtual master axis [832.8] is connected to transmit word 1 and 2 of the SIMOLINK [160]. U600.01=7031 ==> This signal is collected from the receive double word 1 of the SIMOLINK [150] and taken to the input of synchronism [834]. This interconnection is also practical with the MASTERDRIVES unit on which the virtual master axis is computed in order to keep the dead time differences between the drives at an optimal minimum. 2.) Use of a real master externally In this case, the position actual value of another unit is transferred via SIMOLINK to synchronism. During the transfer, a dead time occurs which results in an angular error. 3.) Use of a real master internally With the internal master, the encoder of the master drive is also applied with the slave drive (without using SIMOLINK) and the master position is determined via a dedicated encoder evaluation. In this case, no dead time occurs between the master and the slave drive. Index 1-3 [LU] postion setpoint Index 4-6 [%] speed setpoints	index1: 7031 Unit: - Indices: 6 Type: L2 ,K ,K	Menus: - Parameter menu + Technology + Synchronism - Upread/free access Changeable in: - Drive setting
U601* MasterAxisCycle 2601	The axis cycle length is entered here which the synchronization block receives at the input. However, for a linear axis, zero is entered.	Init: 4096 Min: 0 Max: 2147483647 Unit: - Indices: - Type: I4	Menus: - Parameter menu + Technology + Synchronism - Upread/free access Changeable in: - Drive setting - Ready

Parameter	Description	Data	Read/write
U602* OpMode Sync 2602	If the operating mode [OPERATION] is to be firmly set, this fixed parameter is forwarded via binectors B804/B805.The following function can be selected via U602: Value 0: Continuous operation Value 1. Engaging action Value 2: Disengaging action Value 2: CatchUp Function diagram [834.5]	Init: 0 Min: 0 Max: 3 Unit: - Indices: - Type: O2	Menus: - Parameter menu + Technology + Synchronism - Upread/free access Changeable in: - Drive setting - Ready
U603* Function Sync 2603	The parameter determines the function [FUNCTION] of the synchronism if this is required to be firmly set. Value 0: Anglular-locked synchronism 1:1 Value 1:Electronic gearbox Value 2: Cam Function diagram: [836.3]	Init: 0 Min: 0 Max: 2 Unit: - Indices: - Type: O2	Menus: - Parameter menu + Technology + Synchronism - Upread/free access Changeable in: - Drive setting - Ready
U604* GearFactor Fixed 2604	The parameter defines the gear factor for snychronism. The transmission ratio is indicated as a quotient. Index 1 defines the numerator, Index 2 the denominator. U604.01 Gear factor = ---------- U604.02 Function diagram [384.5]	index1: 1 Min: -32767 Max: 32767 Unit: - Indices: 2 Type: I2	Menus: - Parameter menu + Technology + Synchronism - Upread/free access Changeable in: - Drive setting - Ready
U605* Src GearFactor 2605	The parameter defines the source for the gear factor. The numerator is connected via Index 1, the denominator via Index 2. Function diagram [834.6]	index1: 804 Unit: - Indices: 2 Type: L2 ,K	Menus: - Parameter menu + Technology + Synchronism - Upread/free access Changeable in: - Drive setting
U606* SrcRecomVal 2606	Changeover for the master setpoint of the axis for synchronism. The following master setpoint sources can, for example, be interconnected via U600: 0 = external master 1 = internal master 2 = virtual master Function diagram [834.2]	Init: 0 Min: 0 Max: 2 Unit: - Indices: - Type: I2	Menus: - Parameter menu + Technology + Synchronism - Upread/free access Changeable in: - Drive setting - Ready
U607* Norm V-Max 2607	Index 1: Rated master speed slave: [1000LU/min] As an alternative to MD 23, via this parameter greater values than the limited values of the machine data can also be entered (with two places after the decimal point). If a value greater than zero is entered here, the MD23 is no longer used in synchronization. Index 2: Rated master speed master [1000LU/min] At the input of synchronization, the synchronizing speed from the position setpoint is used for calculation if a percent input is not used. If a value greater than zero is entered here, the MD23 is no longer used as a rated master speed master in synchronization. Special feature: input with two places after the decimal point.	index1: 0,00 Min: 0,00 Max: 20000000,00 Unit: - Indices: 2 Type: O4	Menus: - Parameter menu + Technology + Synchronism - Upread/free access Changeable in: - Drive setting - Ready

Parameter	Description	Data	Read/write
U608* CouplePosition 2608	If the master setpoint exceeds the clutch position, the engaging/disengaging cycle is started, prior to which the enable signal must be given. Function diagram [834.3]	Init: 0 Min: -2147483648 Max: 2147483647 Unit: - Indices: - Type: I4	Menus: - Parameter menu + Technology + Synchronism - Upread/free access Changeable in: - Drive setting - Ready
U609* SrcOffsetClutchP 2609	Index 1: Selection of the offset value for the engaging position during engaging/disengaging action. This value is added to the engaging position in parameter U608. Index 2: Selection of the disengaging position. Only effective if configuration of engaging/disengaging U475 = 1. Parameter U608 has no influence on the disengaging position Function diagram [834.2]	index1: 822 Unit: - Indices: 2 Type: L2 ,K ,K	Menus: - Parameter menu + Technology + Synchronism - Upread/free access Changeable in: - Drive setting
U610* OnOff Ramp 2610	The parameter determines the number of LU increments in which the engaging/disengaging action accelerates to master speed. Example: engaging Ramp = 10000 LU increments Engaging length = 100000 LU increments ==> After the start of engaging action, the drive accelerates in (ramp/2) =5000 inc. up to the master speed, travels synchronously along the (engaging length ramp) = (100000-10000) = 90000 inc. with the master setpoint and is then shut down in 5000 increments. Function diagram [834.4]	Init: 1 Min: 0 Max: 2147483647 Unit: - Indices: - Type: I4	Menus: - Parameter menu + Technology + Synchronism - Upread/free access Changeable in: - Drive setting - Ready
U611* OnOff Length 2611	The parameter determines the number of increments for the master setpoint which are to be engaged/disengaged in total. Example see U610. Function diagram [834.4]	Init: 0 Min: 0 Max: 2147483647 Unit: - Indices: - Type: I4	Menus: - Parameter menu + Technology + Synchronism - Upread/free access Changeable in: - Drive setting - Ready
U612* SrcRelStart/Stop 2612	The parameter defines the binectors for enabling the engaging/disengaging action. The engaging/disengaging action can either be permanently enabled via a steady-state signal or started via an edge only for one engaging/disengaging cycle. From V1.6 with a special engaging/disengaging configuration (U475=1). If the "continuous" constant enable signal is continuously output (at U612.3, where U612.1 has to be 0), the engaging/disengaging cycle is started when the engaging position is overtravelled. If the "continuous" constant enable signal is removed, the engaging/disengaging cycle is finished when the disengaging position is overtravelled. U612.1 : Source for constant enable U612.2 : Source for the single enable U613.3 : Source for "continuous" constant enable Function diagram [834.2]	index1: 0 Unit: - Indices: 3 Type: L2 ,B	Menus: - Parameter menu + Technology + Synchronism - Upread/free access Changeable in: - Drive setting

Parameter	Description	Data	Read/write
U613* ClutchPosOffset 2613	Parameter for offset of the clutch position in [LU]. As standard, it is connected to the input connector offset clutch position (U609). Function diagram [834.1]	Init: 0 Min: -2147483648 Max: 2147483647 Unit: - Indices: - Type: I4	Menus: - Parameter menu + Technology + Synchronism - Upread/free access Changeable in: - Drive setting - Ready
U614* OperMode TabSync 2614	Operating mode for scaling of the table: 0 = Scaling of the Y-axis is effective all the time, a jump has to be reckoned with at the output if scaling of the Y-axis is changed. 1 = Scaling of the Y axis is only effective if binector "Synchronize table" (U621) = 1. If the binector "Synchronize table" selected via U621 = 0, scaling is adopted upon starting the next axis cycle (this only applies if the "continuous output" operating mode has been activated via U616=xx0x). Function diagram [839.3]	Init: 0 Unit: - Indices: - Type: L2	Menus: - Parameter menu + Technology + Synchronism - Upread/free access Changeable in: - Drive setting - Ready
U615* TableConfig 2615	Table configuration The parameter determines how the interpolation points are distributed to the tables, or how many tables are selectable. Use can be made of -> one table with 400 interpolation points (parameter value = 0) or -> two tables each with 200 interpolation points (parameter value = 1) or -> four tables each with 100 interpolation points (parameter value = 2) or -> eight tables each with 50 interpolation points (parameter value = 3) or -> up to eight tables with as many interpolation points of the possible 400 as desired (parameter value = 4). Parameter values 10 to 14 for special applications; only after consultation with the Applications Center, Erlangen. The parameter can be changed only if the mode table is not selected! Changing the configuration sets the status (U617) of the table to "untested" or "non-existent" Function diagram [839.6]	Init: 1 Unit: - Indices: - Type: L2	Menus: - Parameter menu + Technology + Synchronism - Upread/free access Changeable in: - Drive setting - Ready

Parameter	Description	Data	Read/write
U616* Mode Table 2616	The four positions of the parameter value determine the operating mode of the table. - "One's" digit: Value=0 : Output absolute Value=1 : Output relative "Ten's" digit: Value=0 : continuous output Value=1 : Stop at table end - "Hundred's" digit: Value=0 : without scaling of X-axis Value=1 : with scaling of X-axis - "Thousand's" digit: Value=0 : without scaling of Y-axis Value=1 : with scaling of Y-axis Function diagram [839.5]	Init: 0 Unit: - Indices: - Type: L2	Menus: - Parameter menu + Technology + Synchronism - Upread/free access Changeable in: - Drive setting - Ready
U617* Check Table 2617	The parameter starts the table check. A table can only be operated if it is checked beforehand. If table values are changed, U617 is automatically set to the value 1. The value 1 means that the table is not checked. If U617 is set to the value 2, table checking is carried out. If the check is successful, U617 is automatically set to the value 0. If, on the other hand, an error was found during the check, U617 is set to the value 1 again and, parallel to this, the incorrect parameter number is output at n642 - n668.8 (see description U686). U617=0 : Table has been successfully checked U617=1 : Unchecked or incorrect table U617=2 : Triggering of table check U617=10: Table not present U617=99: Table should be deleted The error status to GMC is output as 32-bit value at connectors KK810, KK811and KK840 - KK844. Can be changed only if table is not selected! Deleting a table causes the status of parameter value = 4 to be set to 10, or otherwise to 1! Function diagram [839.4]	index1: 2 Min: 0 Max: 99 Unit: - Indices: 8 Type: O2	Menus: - Parameter menu + Technology + Synchronism - Upread/free access Changeable in: - Drive setting - Ready
U618* X-SetV Tab 2618	Selection of the settable input value for the table (X-axis) Function diagram [839.5]	Init: 823 Unit: - Indices: - Type: L2 ,K ,K	Menus: - Parameter menu + Technology + Synchronism - Upread/free access Changeable in: - Drive setting
U619* Src Set Tab 2619	The parameter selects the binector for setting the table to the X-value defined via U618. Function diagram [839.4]	Init: 0 Unit: - Indices: - Type: L2 ,B	Menus: - Parameter menu + Technology + Synchronism - Upread/free access Changeable in: - Drive setting

Parameter	Description	Data	Read/write
U620* Table Width 2620	The parameter defines the width of the table in [LU]. The table width is the maximum value of the X coordinate. Index 1: for table 1 Index 2: for table 2 Index 3: for table 3 Index 4: for table 4 Index 5: for table 5 Index 6: for table 6 Index 7: for table 7 Index 8: for table 8 Changing this parameter sets the status of the associated table to "untested"! Function diagram [839.4]	index1: 4096 Min: 0 Max: 2147483647 Unit: - Indices: 8 Type: I4	Menus: - Parameter menu + Technology + Synchronism - Upread/free access Changeable in: - Drive setting - Ready
U621* Src Tab Sync 2621	Synchronizing table: If the operating mode "scaling of Y-axis" (U614) is at 0, this binector is not effective. A jump at the output has to be expected for the "table" operating mode. If the operating mode "scaling of the Y-axis" (U614) is at 1, this binector is effective 0 = Scaling is adopted in the next axis cycle 1 = Scaling is adopted immediately Function diagram [839.4]	Init: 0 Unit: - Indices: - Type: L2 ,B	Menus: - Parameter menu + Technology + Synchronism - Upread/free access Changeable in: - Drive setting
U622* SetV Tab (X) 2622	Fixed setting value of X-axis for table. The setting procedure is carried out via the binector selected by U619. Function diagram [839.4]	Init: 0 Min: -2147483648 Max: 2147483647 Unit: - Indices: - Type: I4	Menus: - Parameter menu + Technology + Synchronism - Upread/free access Changeable in: - Drive setting - Ready
U623* FixScaleX-Axis 2623	Fixed values for scaling of the X-axis of the table. Scaling of the X-axis means that the input value of the table (x-axis) is multiplied by a factor. The factor is made up of a numerator (U623.1) and a denominator (U623.2). Scaling of the X-axis acts in the same way as a gearbox connected ahead of a cam. Function diagram [839.1]	index1: 1 Min: -32767 Max: 32767 Unit: - Indices: 2 Type: I2	Menus: - Parameter menu + Technology + Synchronism - Upread/free access Changeable in: - Drive setting - Ready
U624* Src Scale X-Axis 2624	The parameter defines the connectors from which the scaling factor for the X-axis of the table is to be read in. The scaling factor consists of a fraction with numerator and denominator. Index 1: Selects the numerator Index 2: Selects the denominator Fuinction diagram [839.2]	index1: 806 Unit: - Indices: 2 Type: L2 ,K	Menus: - Parameter menu + Technology + Synchronism - Upread/free access Changeable in: - Drive setting

Parameter	Description	Data	Read/write
U625* Src CW 2625	Src Control Word Catch-up Function: Index 1:[AS_SET] catch-up on/off 1 = halt 0 = catch up Index 2:[EN_POS] Enable positioning 1 = enable positioning/halt S=S_Pos 0 = Travel at positionimg speed V=V_Pos Index 3:[AS_MOD] Mode for setpoint speed 1 = Internal ramp-function generator 0 = External or internal ramp-function generator Index 4: CU_TR] Trigger take over halt position 1 = Trigger takeover of halt position 0 = No takeover	index1: 0 Unit: - Indices: 4 Type: L2 ,B	Menus: - Parameter menu + Technology + Synchronism - Upread/free access Changeable in: - Drive setting
U626* Src Setp 2626	Setpoints Catch-up/halt Index 1: Setpoint catch-up speed [10LU/Min] Index 2: Setpoint catch-up speed [%/VMax(MD23)] Index 3: Halt position of catch-up function [LU]	index1: 802 Unit: - Indices: 3 Type: L2 ,K ,K	Menus: - Parameter menu + Technology + Synchronism - Upread/free access Changeable in: - Drive setting
U627* HLZ-RLZ-Round 2627	Index 1: Deceleration time during acceleration 0-60 sec. [ms] Index 2: Acceleration time of catch-up 0-60 Sec. [ms] Note: If acceleration = 0 (U628.1.2 = 0), no smoothing is performed because A = 0 is interpreted as A = infinity.	index1: 1000 Min: 0 Max: 60000 Unit: ms Indices: 2 Type: O2	Menus: - Parameter menu + Technology + Synchronism - Upread/free access Changeable in: - Drive setting - Ready
U628* CatchUpPosiPar 2628	Index 1: DECEL1 = halt deceleration Index 2: ACCEL1 = catch-up acceleration Index 3: DECEL2 = positioning deceleration Index 4: ACCEL2 = positioning acceleration DECEL1: Deceleration used after halting to catch-up setpoint velocity ACCEL1: Acceleration used after halting to catch-up synchronous velocity DECEL2: Deceleration used after halting to catch up the halt position ACCEL2: Acceleration used after halting to catch up setpoint velocity Exception: If CU_TR is used for trigger input positioning acceleration = positioning deceleration. Special feature: For reasons of compatibility, the same accelerations as for DECEL1 and ACCEL1 also apply for DECEL2 and ACCEL2 for the value 0.01 (factory setting).	index1: 204,00 Min: -1,00 Max: 20000000,00 Unit: - Indices: 4 Type: I4	Menus: - Parameter menu + Technology + Synchronism - Upread/free access Changeable in: - Drive setting - Ready

Parameter	Description	Data	Read/write
U629* #InterpolPoint 2629	The parameter defines the number of relevant interpolation points in the table. If more pairs of variables are defined than the number of interpolation points, these are ignored. Changing this parameter sets the status of the associated table to "untested". Exception: In the case of configuration 4 and parameter value = 0, the status of the associated table is set to "table does not exist" Function diagram [839.3]	index1: 0 Min: 0 Max: 800 Unit: - Indices: 8 Type: O2	Menus: - Parameter menu + Technology + Synchronism - Upread/free access Changeable in: - Drive setting - Ready
U630* Tab X1-X50 2630	This parameter is used to input x-coordinates 1 to 50 of the table Function diagram [839.4]	index1: 0 Min: 0 Max: 2147483647 Unit: - Indices: 50 Type: I4	Menus: - Parameter menu + Technology + Synchronism - Upread/free access Changeable in: - Drive setting - Ready
U631* Tab X51-X100 2631	This parameter is used to input x-coordinates 51 to 100 of the table Function diagram [839.4]	index1: 0 Min: 0 Max: 2147483647 Unit: - Indices: 50 Type: I4	Menus: - Parameter menu + Technology + Synchronism - Upread/free access Changeable in: - Drive setting - Ready
U632* Tab X201-X250 2632	This parameter is used to input x-coordinates 201 to 250 of the table Function diagram [839.4]	index1: 0 Min: 0 Max: 2147483647 Unit: - Indices: 50 Type: I4	Menus: - Parameter menu + Technology + Synchronism - Upread/free access Changeable in: - Drive setting - Ready
U633* Tab X251-X300 2633	This parameter is used to input x-coordinates 251 to 300 of the table Function diagram [839.4]	index1: 0 Min: 0 Max: 2147483647 Unit: - Indices: 50 Type: I4	Menus: - Parameter menu + Technology + Synchronism - Upread/free access Changeable in: - Drive setting - Ready
n634 FreeInterpolPts 2634	This parameter shows the free intermediate points still available in the variable configuration [(U615 = 0) of the table Max. value = 400 Min. value = 0	Dec.Plc.: 0 Unit: - Indices: - Type: O2	Menus: - Parameter menu + Technology + Synchronism - Upread/free access
U635* Tab Y1-Y50 2635	This parameter is used to input y-coordinates 1 to 50 of the table Function diagram [839.4]	index1: 0 Min: - 2147483648 Max: 2147483647 Unit: - Indices: 50 Type: I4	Menus: - Parameter menu + Technology + Synchronism - Upread/free access Changeable in: - Drive setting - Ready

Parameter	Description	Data	Read/write
U636* Tab Y51-Y100 2636	This parameter is used to input y-coordinates 51 to 100 of the table Function diagram [839.4]	index1: 0 Min: -2147483648 Max: 2147483647 Unit: - Indices: 50 Type: I4	Menus: - Parameter menu + Technology + Synchronism - Upread/free access Changeable in: - Drive setting - Ready
U637* Tab Y201-Y250 2637	This parameter is used to input y-coordinates 201 to 250 of the table Function diagram [839.4]	index1: 0 Min: -2147483648 Max: 2147483647 Unit: - Indices: 50 Type: I4	Menus: - Parameter menu + Technology + Synchronism - Upread/free access Changeable in: - Drive setting - Ready
U638* Tab Y251-Y300 2638	This parameter is used to input y-coordinates 251 to 300 of the table Function diagram [839.4]	index1: 0 Min: -2147483648 Max: 2147483647 Unit: - Indices: 50 Type: I4	Menus: - Parameter menu + Technology + Synchronism - Upread/free access Changeable in: - Drive setting - Ready

Parameter	Description	Data	Read/write
n639 Table Info 2639	This parameter passes on the table distribution to the parameter ranges. In the table configuration (U615 = 4), there are max. 8 tables with a total of 400 points covering the areas from parameter XXXX in the odd-numbered indices to parameter XXXX in the even-numbered indices in the format: PMU display: X X X X T H Z E H : 1 = U630 : 2 = U631 : 3 = U632 : 4 = U633 : 5 = U640 : 6 = U641 : 7 = U642 : 8 = U643 Z/E : 1...50 Index of the interpolation point INDEX 1: Table 1 The table begins....in Parameter(H), Index (Z/E) INDEX 2: Table 1 The table ends....in Parameter(H), Index (Z/E) INDEX 3: Table 2 The table begins....in Parameter(H), Index (Z/E) INDEX 4: Table 2 The table ends....in Parameter(H), Index (Z/E) INDEX 5: Table 3 The table begins....in Parameter(H), Index (Z/E) INDEX 6: Table 3 The table ends....in Parameter(H), Index (Z/E) etc.	Dec.Plc.: 0 Unit: - Indices: 16 Type: O2	Menus: - Parameter menu + Technology + Synchronism - Upread/free access
U640* Tab X101-X150 2640	This parameter is used to input x-coordinates 101 to 150 of the table Function diagram [839.4]	index1: 0 Min: 0 Max: 2147483647 Unit: - Indices: 50 Type: I4	Menus: - Parameter menu + Technology + Synchronism - Upread/free access Changeable in: - Drive setting - Ready
U641* Tab X151-X200 2641	This parameter is used to input x-coordinates 151 to 200 of the table Function diagram [839.4]	index1: 0 Min: 0 Max: 2147483647 Unit: - Indices: 50 Type: I4	Menus: - Parameter menu + Technology + Synchronism - Upread/free access Changeable in: - Drive setting - Ready

Parameter	Description	Data	Read/write
U642* Tab X301-X350 2642	This parameter is used to input x-coordinates 301 to 350 of the table Function diagram [839.4]	index1: 0 Min: 0 Max: 2147483647 Unit: - Indices: 50 Type: I4	Menus: - Parameter menu + Technology + Synchronism - Upread/free access Changeable in: - Drive setting - Ready
U643* Tab X351-X400 2643	This parameter is used to input x-coordinates 351 to 400 of the table Function diagram [839.4]	index1: 0 Min: 0 Max: 2147483647 Unit: - Indices: 50 Type: I4	Menus: - Parameter menu + Technology + Synchronism - Upread/free access Changeable in: - Drive setting - Ready
n644 Vis Act TabNo 2644	The parameter shows the table number currently selected. Possible display values 1...8 Constituted by the binary status of U650.1..3 table selection switch	Dec.Plc.: 0 Unit: - Indices: - Type: O2	Menus: - Parameter menu + Technology + Synchronism - Upread/free access
U645* Tab Y101-Y150 2645	This parameter is used to input y-coordinates 101 to 150 of the table Function diagram [839.4]	index1: 0 Min: -2147483648 Max: 2147483647 Unit: - Indices: 50 Type: I4	Menus: - Parameter menu + Technology + Synchronism - Upread/free access Changeable in: - Drive setting - Ready
U646* Tab Y151-Y200 2646	This parameter is used to input y-coordinates 151 to 200 of the table Function diagram [839.4]	index1: 0 Min: -2147483648 Max: 2147483647 Unit: - Indices: 50 Type: I4	Menus: - Parameter menu + Technology + Synchronism - Upread/free access Changeable in: - Drive setting - Ready
U647* Tab Y301-Y350 2647	This parameter is used to input y-coordinates 301 to 350 of the table Function diagram [839.4]	index1: 0 Min: -2147483648 Max: 2147483647 Unit: - Indices: 50 Type: I4	Menus: - Parameter menu + Technology + Synchronism - Upread/free access Changeable in: - Drive setting - Ready
U648* Tab Y351-Y400 2648	This parameter is used to input y-coordinates 351 to 400 of the table Function diagram [839.4]	index1: 0 Min: -2147483648 Max: 2147483647 Unit: - Indices: 50 Type: I4	Menus: - Parameter menu + Technology + Synchronism - Upread/free access Changeable in: - Drive setting - Ready
U649* Round Mode CU 2649	Mode for rounding the Catch Up 0 = Rounding not active on sudden reduction of the input value during ramp up. 1 = Rounding always active. Harmonics may occur in the event of sudden reduction of the input value.	Init: 0 Min: 0 Max: 1 Unit: - Indices: - Type: O2	Menus: - Parameter menu + Technology + Synchronism - Upread/free access Changeable in: - Drive setting - Ready

Parameter	Description	Data	Read/write
U650* SrcSelTable 2650	[TABLE_NO] The parameter defines the binector for selecting the table. Table configuration 0 => 1 Table configuration 1 => 1...2 Table configuration 2 => 1...4 Table configuration 3 => 1...8 Table configuration 4 => 1...8 Depending on the configuration, only the appropriate bits (according to the binary code) are evaluated. Exception: In the case of configuration 0, table 1 is always active. Function diagram [839.7]	index1: 0 Unit: - Indices: 3 Type: L2 ,B	Menus: - Parameter menu + Technology + Synchronism - Upread/free access Changeable in: - Drive setting
U651* Scale Y-Axis Fix 2651	Parameterizable fixed values for scaling the Y-axis of the table. The scaling of the Y-axis means that the output value of the table (Y-axis) is multiplied by a factor. The factor is made up of a numerator (U651.1) and a denominator (U652.2). Function diagram [839.5]	index1: 1 Min: -32767 Max: 32767 Unit: - Indices: 2 Type: I2	Menus: - Parameter menu + Technology + Synchronism - Upread/free access Changeable in: - Drive setting - Ready
U652* Src Scale Y-Axis 2652	The parameter defines the connectors from which the numerator and denominator of the scaling factor for the Y-axis of the table are to be read. Index 1: Numerator Index 2: Denominator Function diagram [839.6]	index1: 808 Unit: - Indices: 2 Type: L2 ,K	Menus: - Parameter menu + Technology + Synchronism - Upread/free access Changeable in: - Drive setting
n653 TG SpeedSetpt 2653	This parameter shows the speed setpoints of synchronism in [%]. Index 1: Speed setpoint at output. Function diagram [836.7] Index 2: Speed setpoint according to displacement angle and catch-up. Function diagram [836.4] Index 3: Speed setpoint according to 1:1 function, gear or cam. Function diagram [835.7] Index 4: Speed setpoint according to continuous mode, start mode, stop mode, or catch-up. Function diagram [834.7] Index 5: Speed setpoint from master setpoint source. Function diagram [835.2]	Dec.Plc.: 3 Unit: % Indices: 5 Type: I4	Menus: - Parameter menu + Technology + Synchronism - Upread/free access
n654 BoeGI_Gear.Fact. 2654	Display parameter for current gear factor	Dec.Plc.: 0 Unit: - Indices: 2 Type: I2	Menus: - Parameter menu + Technology + Synchronism - Upread/free access

Parameter	Description	Data	Read/write
n655 TG Pos Setpoint 2655	This parameter shows the position setpoints of synchronism in [LU]. Index 1: Position setpoints at output; Function diagram [836.7] Index 2: Position setpoints according to displacement angle and catch-up. Function diagram [836.4] Index 3: Position setpoints according to 1:1 function, gear, or cam. Function diagram [835.7] Index 4: Position setpoints according to continuous mode, start mode, stop mode, or catch-up. Function diagram [834.7] Index 5: Position setpoints from master setpoint source. Function diagram [835.2]	Dec.Plc.: 0 Unit: - Indices: 5 Type: I4	Menus: - Parameter menu + Technology + Synchronism - Upread/free access
U656* SrcOperModeSync 2656	The parameter defines the source of the binectors for changeover of the operating mode [OPERATION] of synchronism. The mode is selected by two binectors which are coded as follows: U656.02 | U656.01 0 0 = Continuous operation 0 1 = Engaging action 1 0 = Disengaging action 1 1 = Disengaging action Function diagram [834.5]	index1: 804 Unit: - Indices: 2 Type: L2 ,B	Menus: - Parameter menu + Technology + Synchronism - Upread/free access Changeable in: - Drive setting
U657* SrcFuncSync 2657	The parameter defines the source for changeover of the snychronism function [FUNCTION]. The function is selected by two binectors which are coded as follows: U657.02 | U657.01 0 0 = Angular synchronism function 0 1 = Electronic gearbox function 1 0 = Cam function 1 1 = Cam function Function diagram [836.3]	index1: 806 Unit: - Indices: 2 Type: L2 ,B	Menus: - Parameter menu + Technology + Synchronism - Upread/free access Changeable in: - Drive setting
n658 Curr Mode Sync 2658	The parameter shows the active operating mode [OPERATION] of synchronism. This is coded as follows: O = Continuous operation 1 = Engaging action 2 = Disengaging action Function diagram [834.6]	Dec.Plc.: 0 Unit: - Indices: - Type: O2	Menus: - Parameter menu + Technology + Synchronism - Upread/free access
n659 Curr Func Sync 2659	The parameter shows the active function [FUNCTION] of synchronism. This is coded as follows: 0 = Synchronism 1:1 1 = Gear function 2 = Table function Function diagram [836.7]	Dec.Plc.: 0 Unit: - Indices: - Type: O2	Menus: - Parameter menu + Technology + Synchronism - Upread/free access

Parameter	Description	Data	Read/write
U660* Rel Correct 2660	INDEX 1: 1 = Enable of position correction INDEX 2: 1 = Enable of referencing	index1: 0 Min: 0 Max: 1 Unit: - Indices: 2 Type: O2	Menus: - Parameter menu + Technology + Synchronism - Upread/free access Changeable in: - Drive setting - Ready
U661* Mode PosCorr 2661	The parameter determines the effective direction of position correction. Value 0 : Means that the axis is not the one which is transporting the material with the printing index. Position correction is made in positive direction. Value 1 : Means that the axis is the one which is transporting the material with the printing index Position correction is made in the negative direction. This parameter makes allowance for the fact that depending on whether the printing index scanning takes place in front of or behind the drive, it is necessary to brake briefly and decelerate briefly, to compensate for positive displacement. Function diagram [836.5]	Init: 0 Min: 0 Max: 1 Unit: - Indices: - Type: O2	Menus: - Parameter menu + Technology + Synchronism - Upread/free access Changeable in: - Drive setting - Ready
U662 SetPos PosCorr 2662	If the parameter U664 is set to the value zero, parameter U662 is used as the reference position. Position correction operates as follows: With a positive edge at control bit "Start position correction" (U666), the difference between reference position and the measured actual position is determined upon occurrence of the printing index. This difference is conveyed to the position correction and reduced with the correction speed indicated at U667. U661 defines whether the correction direction is positive or negative. Function diagram [836.4]	Init: 0 Min: - 2147483648 Max: 2147483647 Unit: - Indices: - Type: I4	Menus: - Parameter menu + Technology + Synchronism - Upread/free access Changeable in: - Drive setting - Ready
U663* Src SetPos var. 2663	The parameter defines the source for the reference position of position correction if this is specified by a connector. Function diagram [836.3]	Init: 0 Unit: - Indices: - Type: L2 ,K ,K	Menus: - Parameter menu + Technology + Synchronism - Upread/free access Changeable in: - Drive setting
U664* Corr'n Type 2664	Correction type for specification of the reference position of position correction. Value 0 = means that the reference position for position correction is specified via U662 as a fixed value. Value 1 = means that the reference position for position correction is specified via a connector. The source for the connector is defined in U663. Function diagram [836.4]	Init: 0 Min: 0 Max: 1 Unit: - Indices: - Type: O2	Menus: - Parameter menu + Technology + Synchronism - Upread/free access Changeable in: - Drive setting

Parameter	Description	Data	Read/write
U665* SrcActPos PosCo 2665	The parameter defines the source for the actual position for position correction. Description see U662. Function diagram [836.4]	Init: 0 Unit: - Indices: - Type: L2 ,K ,K	Menus: - Parameter menu + Technology + Synchronism - Upread/free access Changeable in: - Drive setting
U666* SrcStartPosCorr 2666	The parameter defines the source binector for starting position correction. Position correction is started with a positive edge. Function diagram [836.4]	Init: 0 Unit: - Indices: - Type: L2 ,B	Menus: - Parameter menu + Technology + Synchronism - Upread/free access Changeable in: - Drive setting
U667* PosCorrSpd 2667	The measured position difference is reduced at this speed after position correction has started. The correction speed is indicated in 1000 LU increments/minute. Function diagram [836.5]	Init: 0 Min: 0 Max: 2147483647 Unit: - Indices: - Type: I4	Menus: - Parameter menu + Technology + Synchronism - Upread/free access Changeable in: - Drive setting - Ready
n668 Status Table 2668	Status of the last checked table: PMU display: X X X X T H Z E Z/E : 1...50 Index of the last error-free support value H : 1 = U630 error : 2 = U631 error : 3 = U640 error : 4 = U641 error : 5 = U632 error : 6 = U633 error : 7 = U642 error : 8 = U643 error T : 0 = no error 1 = Number of support points = 0 2 = Support value > table width 3 = Ascending order of support values (x-axis) violated	Dec.Plc.: 0 Unit: - Indices: 8 Type: O2	Menus: - Parameter menu - Upread/free access
U669 TG ReserveCon1 2669	Reserved for future functions	index1: 0 Unit: - Indices: 2 Type: L2 ,K ,K	Menus: - Parameter menu + Technology + Synchronism - Upread/free access Changeable in: - Drive setting
U670* Mod rel. Offset 2670	0 = Displacement is processed as absolute 1 = Displacement is processed with residual-displacement evaluation.	Init: 0 Min: 0 Max: 1 Unit: - Indices: - Type: O2	Menus: - Parameter menu + Technology + Synchronism - Upread/free access Changeable in: - Drive setting - Ready

Parameter	Description	Data	Read/write
U671* Src SetV Outp 2671	The parameter defines the source for the setting value of synchronism. The setting value is transferred to the output with a positive edge at the binector "Set position setpoint". It is practical, for example, to set the position setpoint to othe current position actual value before start of synchronism in order to avoid jumps. Function diagram [836.5]	Init: 120 Unit: - Indices: - Type: L2 ,K ,K	Menus: - Parameter menu + Technology + Synchronism - Upread/free access Changeable in: - Drive setting
U672* Set_DispAngle 2672	With rising edge at the input, the current displacement is set to the setting value of the connector U678.2 (setting input).	Init: 0 Unit: - Indices: - Type: L2 ,B	Menus: - Parameter menu + Technology + Synchronism - Upread/free access Changeable in: - Drive setting
U673* Src Set Outp 2673	Selection of input binector for setting the output position setpoint or syncrhronism function. If there is a positive edge at this input, the output of the block is set to "Setting value output" U671. Function diagram [836.5]	Init: 0 Unit: - Indices: - Type: L2 ,B	Menus: - Parameter menu + Technology + Synchronism - Upread/free access Changeable in: - Drive setting
U674* Src Rel Sync 2674	Selection of the binector "Enable synchronism". The parameter defines the source for enabling the synchronism. If synchronism is not enabled, the output of the synchronism (KK310) is permanently tracked to the input of "setting value position setpoint output" (U671). If the position actual value of the slave axis (e.g. KK120) is softwired as setting value, jolt-free changeover to synchronism can be effected at any time. Function diagram [836.4]	Init: 220 Unit: - Indices: - Type: L2 ,B	Menus: - Parameter menu + Technology + Synchronism - Upread/free access Changeable in: - Drive setting
U675* Rel_Correction 2675	INDEX 1: Binector source for the enable of referencing of U660.1 -> B824 Fixed binectors INDEX 2: Binector source for the enable of position correction of U660.2 -> B825 Fixed binectors INDEX 3: Binector source for deleting the remaining distance during position correction.	index1: 824 Unit: - Indices: 3 Type: L2 ,B	Menus: - Parameter menu + Technology + Synchronism - Upread/free access Changeable in: - Drive setting
U676* MastSetpSync 2676	0->1 : Synchronization with positive edge	Init: 0 Unit: - Indices: - Type: L2 ,B	Menus: - Parameter menu + Technology + Synchronism - Upread/free access Changeable in: - Drive setting
U677* DispAngle_abs 2677	Displacement angle input [LU] Index 1: Displacement angle absolute Index 2: Displacement angle relative	index1: 0 Min: -2147483648 Max: 2147483647 Unit: - Indices: 2 Type: I4	Menus: - Parameter menu + Technology + Synchronism - Upread/free access Changeable in: - Drive setting - Ready

Parameter	Description	Data	Read/write
U678* DisplaceAngle 2678	Index 1: Displacement angle absolute Index 2: Displacement angle setting value Index 3: Displacement angle relative	index1: 813 Unit: - Indices: 3 Type: L2 ,K ,K	Menus: - Parameter menu + Technology + Synchronism - Upread/free access Changeable in: - Drive setting
U679 VsetVirtMastFix 2679	Fixed setpoint for the virtual master axis in 10 LU/min at KK818 -> U680 (default)	Init: 0 Min: -2147483647 Max: 2147483647 Unit: - Indices: - Type: I4	Menus: - Parameter menu + Technology + Synchronism - Upread/free access Changeable in: - Drive setting - Ready
U680* Src SpdSetp VMAx 2680	Source of the speed setpoint of the virtual master axis if this is to be specified in [10*LU/min]. Function diagram [832.1]	Init: 818 Unit: - Indices: - Type: L2 ,K ,K	Menus: - Parameter menu + Technology + Synchronism - Upread/free access Changeable in: - Drive setting
U681* Src V set % VMAx 2681	Source of the speed setpoint of the virtual master axis if it is to be specified in %. For this, the speed which should correspond to the 100% value must be indicated in increments/sec in U682. Function diagram [832.1]	Init: 0 Unit: - Indices: - Type: L2 ,K	Menus: - Parameter menu + Technology + Synchronism - Upread/free access Changeable in: - Drive setting
U682* Vrated VmAxis 2682	Rated master speed of the virtual master axis. The value indicates which speed in [10*LU/min] should correspond to the 100% input value at U681. The value must only be indicated, the master speed be specified in %, i.e. if U683 = 0. Function diagram [832.2]	Init: 1228800 Min: 1 Max: 2147483647 Unit: - Indices: - Type: I4	Menus: - Parameter menu + Technology + Synchronism - Upread/free access Changeable in: - Drive setting - Ready
U683* Vset (inc/s)(%) 2683	The parameter selects the source for the speed setpoint of the virtual master axis from: 0 = Specified in [%] via U681 1 = Specified in [I10*LU/min] via U680 Function diagram [832.3]	Init: 0 Min: 0 Max: 1 Unit: - Indices: - Type: O2	Menus: - Parameter menu + Technology + Synchronism - Upread/free access Changeable in: - Drive setting - Ready
U684* Src CtrlSig VMAx 2684	The parameter defines the source for the control signals of the virtual master axis Index 1: [R:VM] Reset (V=0) Index 2: [ST_VM] Start/Stop (1= Start acceleration) Index 3: [S_VM] Set virtual master axis to initial position Function diagram [832.2]	index1: 0 Unit: - Indices: 3 Type: L2 ,B	Menus: - Parameter menu + Technology + Synchronism - Upread/free access Changeable in: - Drive setting - Ready
U685* Accel VMAx 2685	Acceleration and deceleration of the ramp-function generator in the virtual master axis. Acceleration is specified in [100*LU/s^2]. Function diagram [832.5]	Init: 204 Min: 0 Max: 2147483647 Unit: - Indices: - Type: I4	Menus: - Parameter menu + Technology + Synchronism - Upread/free access Changeable in: - Drive setting - Ready

Parameter	Description	Data	Read/write
U686* Src SetV VMAx 2686		Init: 819 Unit: - Indices: - Type: L2 ,K ,K	Menus: - Parameter menu + Technology + Synchronism - Upread/free access Changeable in: - Drive setting - Ready
U687* Axis Cycle VMAx 2687	Axis cycle length of the virtual master axis [LU]. Function diagram [832.6]	Init: 4096 Min: 0 Max: 2147483647 Unit: - Indices: - Type: I4	Menus: - Parameter menu + Technology + Synchronism - Upread/free access Changeable in: - Drive setting - Ready
U688* SetpFixConnCatch 2688	Setpoints of the loops over fixed connectors Index 1: Stopping position of the loop Index 2: Speed setpoint of the loop	index1: 0 Min: - 2147483648 Max: 2147483647 Unit: - Indices: 2 Type: I4	Menus: - Parameter menu - Upread/free access Changeable in: - Drive setting - Ready
U689* Src Rel VMAx 2689	Parameter selects the binector for enabling the virtual master axis. If the enable signal is 0, the master axis is not calculated. Function diagram [832.2]	Init: 1 Unit: - Indices: - Type: L2 ,B	Menus: - Parameter menu - Upread/free access Changeable in: - Drive setting - Ready
n690 PosOutput VMAx 2690	Visualization parameter: Position setpoint at output of virtual master axis [LU]. Function diagram [832.8]	Dec.Plc.: 0 Unit: - Indices: - Type: I4	Menus: - Parameter menu - Upread/free access
n691 Speed OutpVMAx 2691	Indication of speed setpoint of the virtual master axis in [10*LU/min] Function diagram [832.8]	Dec.Plc.: 0 Unit: - Indices: - Type: I4	Menus: - Parameter menu - Upread/free access
n692 Speed Setp VMAx 2692	The visualization parameter displays the speed setpoint at the input of the virtual master axis in [10*LU/min] Function diagram [832.3]	Dec.Plc.: 0 Unit: - Indices: - Type: I4	Menus: - Parameter menu - Upread/free access
U693 SetV VMAx 2693	Fixed setpoint for the set value of the virtual master (master axis). With [S_VM] U684.03 set master axis to initial position, the distance in the axis cycle is set via this fixed connector.	Init: 0 Min: - 2147483647 Max: 2147483647 Unit: - Indices: - Type: I4	Menus: - Parameter menu + Technology + Synchronism - Upread/free access Changeable in: - Drive setting - Ready
U694* Adjust_DispAngle 2694	Index 1: 0>1 increase displacement angle Index 2: 0>1 decrease displacement angle	index1: 0 Unit: - Indices: 2 Type: L2 ,B	Menus: - Parameter menu + Technology + Synchronism - Upread/free access Changeable in: - Drive setting

Parameter	Description	Data	Read/write
U695* Adj.Spd Para 2695	The adjusting speed for manual adjustment is specified here via binectors U696.1 (+) and U696.2 (-).	index1: 60000,00 Min: 0,00 Max: 20000000,00 Unit: - Indices: 3 Type: I4	Menus: - Parameter menu + Technology + Synchronism - Upread/free access Changeable in: - Drive setting - Ready
U696* DispAngle+ 2696	Index 1: Displacement angle + 0 : no adjustment 1 : continuous displacement alteration Index 2: Displacement angle - 0 : no adjustment 1 : continuous displacement alteration	index1: 0 Unit: - Indices: 2 Type: L2 ,B	Menus: - Parameter menu + Technology + Synchronism - Upread/free access Changeable in: - Drive setting
U697* Offset Corr Par 2697	Index 1: Acceleration of the displacement angle correction [1000*LU/s^2] Index 2: Speed of the displacement angle correction [1000*LU/min] In function diagram 841	index1: 0,00 Min: 0,00 Max: 20000000,00 Unit: - Indices: 2 Type: O4	Menus: - Parameter menu + Technology + Synchronism - Upread/free access Changeable in: - Drive setting - Ready
U698* OffstCorrVFactor 2698	INDEX 1: Speed adjustment in percent for U697.2 INDEX 2: Speed adjustment in percent for U695.1	index1: 1 Unit: - Indices: 2 Type: L2 ,K ,K	Menus: - Parameter menu + Technology + Synchronism - Upread/free access Changeable in: - Drive setting
U699* Mode Correct 2699	Index 1: Master value synchronization 0 = shortest distance 1 = only positive direction 2 = only negative direction 3 = only positive direction with window 4 = only negative direction with window Index 2: Displacement angle absolute 0 = shortest distance 1 = prescribed direction 2 = prescribed direction	index1: 0 Min: 0 Max: 4 Unit: - Indices: 2 Type: O2	Menus: - Parameter menu + Technology + Synchronism - Upread/free access Changeable in: - Drive setting - Ready
U708 Override.Fixed 2708		Init: 100 Min: 0 Max: 255 Unit: - Indices: - Type: O2	Menus: - Parameter menu + Technology + Positioning - Upread/free access Changeable in: - Drive setting - Ready
U709* SrcOverride P 2709	The parameter defines the source for override for positioning. Override influences the traversing speed during positioning. If the parameter value is 0, the override is used by binectors U710.16 to U710.23.	Init: 859 Unit: - Indices: - Type: L2 ,K	Menus: - Parameter menu + Technology + Positioning - Upread/free access Changeable in: - Drive setting

Parameter	Description	Data	Read/write
U710* Src PosCntrSig 2710	Source for the control bits of positioning Index1: [TGL_ I] Toggle bit input (MDI block change on the fly) Index2:[RIE] Read-in Enable Index3:[STA] Start (Start / Stop positioning motion) Index4:[CRD] Clear Remaining Distance Index5: [ACK_ M] Acknowledge M function Index6: [RST] Reset Technology Index7:[SIST] Single Step Index9-16:MDI/Prog No. BitNo. (MDI number for MDI) (Program number for automatic mode) Index9:MDI/Prog No. Bit0 Index10:MDI/Prog No. Bit1 Index11:MDI/Prog No. Bit2 Index12:MDI/Prog No. Bit3 Index13:MDI/Prog No. Bit4 Index14:MDI/Prog No. Bit5 Index15:MDI/Prog No. Bit6 Index16:MDI/Prog No. Bit7 Index 17-24 OVERRIDE BitNo. Speed Override 0...255 Index17:Override Bit0 Index18:Override Bit1 Index19:Override Bit2 Index20:Override Bit3 Index21:Override Bit4 Index22:Override Bit5 Index23:Override Bit6 Index24:Override Bit7 Index25:[BLSK] Skip block: Index25:[J_ BWD] Job backwards Index26:[F_ S] Fast / Slow for setup/referencing Index27:[J_ FWD] Jog fowards Index28-31:MODE_ IN MODE_ IN BitNo.: Operating mode pre-selection (can only be changed at standstill) Index28:Mode Bit0 Index29:Mode Bit1 Index30:Mode Bit2 Index31:Mode Bit3	index1: 0 Unit: - Indices: 32 Type: L2 ,B	Menus: - Parameter menu + Technology + Positioning - Upread/free access Changeable in: - Drive setting
U720 AutomaticRecord 2720	The automatic record stored in the EEPROM is displayed on parameters. The automatic record consists of the following data: 1. Program number / continuation number / record number 2. Validity bits of functions or values 3. 1...4 G-function 4. Position 5. Speed 6. 1...3 M-function / D-number	index1: 0 Min: -2147483647 Max: 2147483647 Unit: - Indices: 6 Type: I4	Menus: - Parameter menu + Technology + Positioning - Upread/free access Changeable in: - Drive setting - Ready
U721 AutomaticRecord 2721	The automatic record stored in the EEPROM is displayed on parameters. The automatic record consists of the following data: 1. Program number / continuation number / record number 2. Validity bits of functions or values 3. 1...4 G-function 4. Position 5. Speed 6. 1...3 M-function / D-number	index1: 0 Min: -2147483647 Max: 2147483647 Unit: - Indices: 6 Type: I4	Menus: - Parameter menu + Technology + Positioning - Upread/free access Changeable in: - Drive setting - Ready

Parameter	Description	Data	Read/write
U722 AutomaticRecord 2722	The automatic record stored in the EEPROM is displayed on parameters. The automatic record consists of the following data: 1. Program number / continuation number / record number 2. Validity bits of functions or values 3. 1...4 G-function 4. Position 5. Speed 6. 1...3 M-function / D-number	index1: 0 Min: - 2147483647 Max: 2147483647 Unit: - Indices: 6 Type: I4	Menus: - Parameter menu + Technology + Positioning - Upread/free access Changeable in: - Drive setting - Ready
U723 AutomaticRecord 2723	The automatic record stored in the EEPROM is displayed on parameters. The automatic record consists of the following data: 1. Program number / continuation number / record number 2. Validity bits of functions or values 3. 1...4 G-function 4. Position 5. Speed 6. 1...3 M-function / D-number	index1: 0 Min: - 2147483647 Max: 2147483647 Unit: - Indices: 6 Type: I4	Menus: - Parameter menu + Technology + Positioning - Upread/free access Changeable in: - Drive setting - Ready
U724 AutomaticRecord 2724	The automatic record stored in the EEPROM is displayed on parameters. The automatic record consists of the following data: 1. Program number / continuation number / record number 2. Validity bits of functions or values 3. 1...4 G-function 4. Position 5. Speed 6. 1...3 M-function / D-number	index1: 0 Min: - 2147483647 Max: 2147483647 Unit: - Indices: 6 Type: I4	Menus: - Parameter menu + Technology + Positioning - Upread/free access Changeable in: - Drive setting - Ready
U725 AutomaticRecord 2725	The automatic record stored in the EEPROM is displayed on parameters. The automatic record consists of the following data: 1. Program number / continuation number / record number 2. Validity bits of functions or values 3. 1...4 G-function 4. Position 5. Speed 6. 1...3 M-function / D-number	index1: 0 Min: - 2147483647 Max: 2147483647 Unit: - Indices: 6 Type: I4	Menus: - Parameter menu + Technology + Positioning - Upread/free access Changeable in: - Drive setting - Ready
U726 AutomaticRecord 2726	The automatic record stored in the EEPROM is displayed on parameters. The automatic record consists of the following data: 1. Program number / continuation number / record number 2. Validity bits of functions or values 3. 1...4 G-function 4. Position 5. Speed 6. 1...3 M-function / D-number	index1: 0 Min: - 2147483647 Max: 2147483647 Unit: - Indices: 6 Type: I4	Menus: - Parameter menu + Technology + Positioning - Upread/free access Changeable in: - Drive setting - Ready
U727 AutomaticRecord 2727	The automatic record stored in the EEPROM is displayed on parameters. The automatic record consists of the following data: 1. Program number / continuation number / record number 2. Validity bits of functions or values 3. 1...4 G-function 4. Position 5. Speed 6. 1...3 M-function / D-number	index1: 0 Min: - 2147483647 Max: 2147483647 Unit: - Indices: 6 Type: I4	Menus: - Parameter menu + Technology + Positioning - Upread/free access Changeable in: - Drive setting - Ready

Parameter	Description	Data	Read/write
U728 AutomaticRecord 2728	The automatic record stored in the EEPROM is displayed on parameters. The automatic record consists of the following data: 1. Program number / continuation number / record number 2. Validity bits of functions or values 3. 1...4 G-function 4. Position 5. Speed 6. 1...3 M-function / D-number	index1: 0 Min: - 2147483647 Max: 2147483647 Unit: - Indices: 6 Type: I4	Menus: - Parameter menu + Technology + Positioning - Upread/free access Changeable in: - Drive setting - Ready
U729 AutomaticRecord 2729	The automatic record stored in the EEPROM is displayed on parameters. The automatic record consists of the following data: 1. Program number / continuation number / record number 2. Validity bits of functions or values 3. 1...4 G-function 4. Position 5. Speed 6. 1...3 M-function / D-number	index1: 0 Min: - 2147483647 Max: 2147483647 Unit: - Indices: 6 Type: I4	Menus: - Parameter menu + Technology + Positioning - Upread/free access Changeable in: - Drive setting - Ready
U730 AutomaticRecord 2730	The automatic record stored in the EEPROM is displayed on parameters. The automatic record consists of the following data: 1. Program number / continuation number / record number 2. Validity bits of functions or values 3. 1...4 G-function 4. Position 5. Speed 6. 1...3 M-function / D-number	index1: 0 Min: - 2147483647 Max: 2147483647 Unit: - Indices: 6 Type: I4	Menus: - Parameter menu + Technology + Positioning - Upread/free access Changeable in: - Drive setting - Ready
U731 AutomaticRecord 2731	The automatic record stored in the EEPROM is displayed on parameters. The automatic record consists of the following data: 1. Program number / continuation number / record number 2. Validity bits of functions or values 3. 1...4 G-function 4. Position 5. Speed 6. 1...3 M-function / D-number	index1: 0 Min: - 2147483647 Max: 2147483647 Unit: - Indices: 6 Type: I4	Menus: - Parameter menu + Technology + Positioning - Upread/free access Changeable in: - Drive setting - Ready
U732 AutomaticRecord 2732	The automatic record stored in the EEPROM is displayed on parameters. The automatic record consists of the following data: 1. Program number / continuation number / record number 2. Validity bits of functions or values 3. 1...4 G-function 4. Position 5. Speed 6. 1...3 M-function / D-number	index1: 0 Min: - 2147483647 Max: 2147483647 Unit: - Indices: 6 Type: I4	Menus: - Parameter menu + Technology + Positioning - Upread/free access Changeable in: - Drive setting - Ready
U733 AutomaticRecord 2733	The automatic record stored in the EEPROM is displayed on parameters. The automatic record consists of the following data: 1. Program number / continuation number / record number 2. Validity bits of functions or values 3. 1...4 G-function 4. Position 5. Speed 6. 1...3 M-function / D-number	index1: 0 Min: - 2147483647 Max: 2147483647 Unit: - Indices: 6 Type: I4	Menus: - Parameter menu + Technology + Positioning - Upread/free access Changeable in: - Drive setting - Ready

Parameter	Description	Data	Read/write
U734 AutomaticRecord 2734	The automatic record stored in the EEPROM is displayed on parameters. The automatic record consists of the following data: 1. Program number / continuation number / record number 2. Validity bits of functions or values 3. 1...4 G-function 4. Position 5. Speed 6. 1...3 M-function / D-number	index1: 0 Min: - 2147483647 Max: 2147483647 Unit: - Indices: 6 Type: I4	Menus: - Parameter menu + Technology + Positioning - Upread/free access Changeable in: - Drive setting - Ready
U735 AutomaticRecord 2735	The automatic record stored in the EEPROM is displayed on parameters. The automatic record consists of the following data: 1. Program number / continuation number / record number 2. Validity bits of functions or values 3. 1...4 G-function 4. Position 5. Speed 6. 1...3 M-function / D-number	index1: 0 Min: - 2147483647 Max: 2147483647 Unit: - Indices: 6 Type: I4	Menus: - Parameter menu + Technology + Positioning - Upread/free access Changeable in: - Drive setting - Ready
U736 AutomaticRecord 2736	The automatic record stored in the EEPROM is displayed on parameters. The automatic record consists of the following data: 1. Program number / continuation number / record number 2. Validity bits of functions or values 3. 1...4 G-function 4. Position 5. Speed 6. 1...3 M-function / D-number	index1: 0 Min: - 2147483647 Max: 2147483647 Unit: - Indices: 6 Type: I4	Menus: - Parameter menu + Technology + Positioning - Upread/free access Changeable in: - Drive setting - Ready
U737 AutomaticRecord 2737	The automatic record stored in the EEPROM is displayed on parameters. The automatic record consists of the following data: 1. Program number / continuation number / record number 2. Validity bits of functions or values 3. 1...4 G-function 4. Position 5. Speed 6. 1...3 M-function / D-number	index1: 0 Min: - 2147483647 Max: 2147483647 Unit: - Indices: 6 Type: I4	Menus: - Parameter menu + Technology + Positioning - Upread/free access Changeable in: - Drive setting - Ready
U738 AutomaticRecord 2738	The automatic record stored in the EEPROM is displayed on parameters. The automatic record consists of the following data: 1. Program number / continuation number / record number 2. Validity bits of functions or values 3. 1...4 G-function 4. Position 5. Speed 6. 1...3 M-function / D-number	index1: 0 Min: - 2147483647 Max: 2147483647 Unit: - Indices: 6 Type: I4	Menus: - Parameter menu + Technology + Positioning - Upread/free access Changeable in: - Drive setting - Ready
U739 AutomaticRecord 2739	The automatic record stored in the EEPROM is displayed on parameters. The automatic record consists of the following data: 1. Program number / continuation number / record number 2. Validity bits of functions or values 3. 1...4 G-function 4. Position 5. Speed 6. 1...3 M-function / D-number	index1: 0 Min: - 2147483647 Max: 2147483647 Unit: - Indices: 6 Type: I4	Menus: - Parameter menu + Technology + Positioning - Upread/free access Changeable in: - Drive setting - Ready

Parameter	Description	Data	Read/write
U740 AutomaticRecord 2740	The automatic record stored in the EEPROM is displayed on parameters. The automatic record consists of the following data: 1. Program number / continuation number / record number 2. Validity bits of functions or values 3. 1...4 G-function 4. Position 5. Speed 6. 1...3 M-function / D-number	index1: 0 Min: - 2147483647 Max: 2147483647 Unit: - Indices: 6 Type: I4	Menus: - Parameter menu + Technology + Positioning - Upread/free access Changeable in: - Drive setting - Ready
U741 AutomaticRecord 2741	The automatic record stored in the EEPROM is displayed on parameters. The automatic record consists of the following data: 1. Program number / continuation number / record number 2. Validity bits of functions or values 3. 1...4 G-function 4. Position 5. Speed 6. 1...3 M-function / D-number	index1: 0 Min: - 2147483647 Max: 2147483647 Unit: - Indices: 6 Type: I4	Menus: - Parameter menu + Technology + Positioning - Upread/free access Changeable in: - Drive setting - Ready
U742 AutomaticRecord 2742	The automatic record stored in the EEPROM is displayed on parameters. The automatic record consists of the following data: 1. Program number / continuation number / record number 2. Validity bits of functions or values 3. 1...4 G-function 4. Position 5. Speed 6. 1...3 M-function / D-number	index1: 0 Min: - 2147483647 Max: 2147483647 Unit: - Indices: 6 Type: I4	Menus: - Parameter menu + Technology + Positioning - Upread/free access Changeable in: - Drive setting - Ready
U743 AutomaticRecord 2743	The automatic record stored in the EEPROM is displayed on parameters. The automatic record consists of the following data: 1. Program number / continuation number / record number 2. Validity bits of functions or values 3. 1...4 G-function 4. Position 5. Speed 6. 1...3 M-function / D-number	index1: 0 Min: - 2147483647 Max: 2147483647 Unit: - Indices: 6 Type: I4	Menus: - Parameter menu + Technology + Positioning - Upread/free access Changeable in: - Drive setting - Ready
U744 AutomaticRecord 2744	The automatic record stored in the EEPROM is displayed on parameters. The automatic record consists of the following data: 1. Program number / continuation number / record number 2. Validity bits of functions or values 3. 1...4 G-function 4. Position 5. Speed 6. 1...3 M-function / D-number	index1: 0 Min: - 2147483647 Max: 2147483647 Unit: - Indices: 6 Type: I4	Menus: - Parameter menu + Technology + Positioning - Upread/free access Changeable in: - Drive setting - Ready
U745 AutomaticRecord 2745	The automatic record stored in the EEPROM is displayed on parameters. The automatic record consists of the following data: 1. Program number / continuation number / record number 2. Validity bits of functions or values 3. 1...4 G-function 4. Position 5. Speed 6. 1...3 M-function / D-number	index1: 0 Min: - 2147483647 Max: 2147483647 Unit: - Indices: 6 Type: I4	Menus: - Parameter menu + Technology + Positioning - Upread/free access Changeable in: - Drive setting - Ready

Parameter	Description	Data	Read/write
U746 AutomaticRecord 2746	The automatic record stored in the EEPROM is displayed on parameters. The automatic record consists of the following data: 1. Program number / continuation number / record number 2. Validity bits of functions or values 3. 1...4 G-function 4. Position 5. Speed 6. 1...3 M-function / D-number	index1: 0 Min: - 2147483647 Max: 2147483647 Unit: - Indices: 6 Type: I4	Menus: - Parameter menu + Technology + Positioning - Upread/free access Changeable in: - Drive setting - Ready
U747 AutomaticRecord 2747	The automatic record stored in the EEPROM is displayed on parameters. The automatic record consists of the following data: 1. Program number / continuation number / record number 2. Validity bits of functions or values 3. 1...4 G-function 4. Position 5. Speed 6. 1...3 M-function / D-number	index1: 0 Min: - 2147483647 Max: 2147483647 Unit: - Indices: 6 Type: I4	Menus: - Parameter menu + Technology + Positioning - Upread/free access Changeable in: - Drive setting - Ready
U748 AutomaticRecord 2748	The automatic record stored in the EEPROM is displayed on parameters. The automatic record consists of the following data: 1. Program number / continuation number / record number 2. Validity bits of functions or values 3. 1...4 G-function 4. Position 5. Speed 6. 1...3 M-function / D-number	index1: 0 Min: - 2147483647 Max: 2147483647 Unit: - Indices: 6 Type: I4	Menus: - Parameter menu + Technology + Positioning - Upread/free access Changeable in: - Drive setting - Ready
U749 AutomaticRecord 2749	The automatic record stored in the EEPROM is displayed on parameters. The automatic record consists of the following data: 1. Program number / continuation number / record number 2. Validity bits of functions or values 3. 1...4 G-function 4. Position 5. Speed 6. 1...3 M-function / D-number	index1: 0 Min: - 2147483647 Max: 2147483647 Unit: - Indices: 6 Type: I4	Menus: - Parameter menu + Technology + Positioning - Upread/free access Changeable in: - Drive setting - Ready
U750 AutomaticRecord 2750	The automatic record stored in the EEPROM is displayed on parameters. The automatic record consists of the following data: 1. Program number / continuation number / record number 2. Validity bits of functions or values 3. 1...4 G-function 4. Position 5. Speed 6. 1...3 M-function / D-number	index1: 0 Min: - 2147483647 Max: 2147483647 Unit: - Indices: 6 Type: I4	Menus: - Parameter menu + Technology + Positioning - Upread/free access Changeable in: - Drive setting - Ready
U751 AutomaticRecord 2751	The automatic record stored in the EEPROM is displayed on parameters. The automatic record consists of the following data: 1. Program number / continuation number / record number 2. Validity bits of functions or values 3. 1...4 G-function 4. Position 5. Speed 6. 1...3 M-function / D-number	index1: 0 Min: - 2147483647 Max: 2147483647 Unit: - Indices: 6 Type: I4	Menus: - Parameter menu + Technology + Positioning - Upread/free access Changeable in: - Drive setting - Ready

Parameter	Description	Data	Read/write
U752 AutomaticRecord 2752	The automatic record stored in the EEPROM is displayed on parameters. The automatic record consists of the following data: 1. Program number / continuation number / record number 2. Validity bits of functions or values 3. 1...4 G-function 4. Position 5. Speed 6. 1...3 M-function / D-number	index1: 0 Min: - 2147483647 Max: 2147483647 Unit: - Indices: 6 Type: I4	Menus: - Parameter menu + Technology + Positioning - Upread/free access Changeable in: - Drive setting - Ready
U753 AutomaticRecord 2753	The automatic record stored in the EEPROM is displayed on parameters. The automatic record consists of the following data: 1. Program number / continuation number / record number 2. Validity bits of functions or values 3. 1...4 G-function 4. Position 5. Speed 6. 1...3 M-function / D-number	index1: 0 Min: - 2147483647 Max: 2147483647 Unit: - Indices: 6 Type: I4	Menus: - Parameter menu + Technology + Positioning - Upread/free access Changeable in: - Drive setting - Ready
U754 AutomaticRecord 2754	The automatic record stored in the EEPROM is displayed on parameters. The automatic record consists of the following data: 1. Program number / continuation number / record number 2. Validity bits of functions or values 3. 1...4 G-function 4. Position 5. Speed 6. 1...3 M-function / D-number	index1: 0 Min: - 2147483647 Max: 2147483647 Unit: - Indices: 6 Type: I4	Menus: - Parameter menu + Technology + Positioning - Upread/free access Changeable in: - Drive setting - Ready
U755 AutomaticRecord 2755	The automatic record stored in the EEPROM is displayed on parameters. The automatic record consists of the following data: 1. Program number / continuation number / record number 2. Validity bits of functions or values 3. 1...4 G-function 4. Position 5. Speed 6. 1...3 M-function / D-number	index1: 0 Min: - 2147483647 Max: 2147483647 Unit: - Indices: 6 Type: I4	Menus: - Parameter menu + Technology + Positioning - Upread/free access Changeable in: - Drive setting - Ready
U756 AutomaticRecord 2756	The automatic record stored in the EEPROM is displayed on parameters. The automatic record consists of the following data: 1. Program number / continuation number / record number 2. Validity bits of functions or values 3. 1...4 G-function 4. Position 5. Speed 6. 1...3 M-function / D-number	index1: 0 Min: - 2147483647 Max: 2147483647 Unit: - Indices: 6 Type: I4	Menus: - Parameter menu + Technology + Positioning - Upread/free access Changeable in: - Drive setting - Ready
U757 AutomaticRecord 2757	The automatic record stored in the EEPROM is displayed on parameters. The automatic record consists of the following data: 1. Program number / continuation number / record number 2. Validity bits of functions or values 3. 1...4 G-function 4. Position 5. Speed 6. 1...3 M-function / D-number	index1: 0 Min: - 2147483647 Max: 2147483647 Unit: - Indices: 6 Type: I4	Menus: - Parameter menu + Technology + Positioning - Upread/free access Changeable in: - Drive setting - Ready

Parameter	Description	Data	Read/write
U758 AutomaticRecord 2758	The automatic record stored in the EEPROM is displayed on parameters. The automatic record consists of the following data: 1. Program number / continuation number / record number 2. Validity bits of functions or values 3. 1...4 G-function 4. Position 5. Speed 6. 1...3 M-function / D-number	index1: 0 Min: - 2147483647 Max: 2147483647 Unit: - Indices: 6 Type: I4	Menus: - Parameter menu + Technology + Positioning - Upread/free access Changeable in: - Drive setting - Ready
U759 AutomaticRecord 2759	The automatic record stored in the EEPROM is displayed on parameters. The automatic record consists of the following data: 1. Program number / continuation number / record number 2. Validity bits of functions or values 3. 1...4 G-function 4. Position 5. Speed 6. 1...3 M-function / D-number	index1: 0 Min: - 2147483647 Max: 2147483647 Unit: - Indices: 6 Type: I4	Menus: - Parameter menu + Technology + Positioning - Upread/free access Changeable in: - Drive setting - Ready
U760 AutomaticRecord 2760	The automatic record stored in the EEPROM is displayed on parameters. The automatic record consists of the following data: 1. Program number / continuation number / record number 2. Validity bits of functions or values 3. 1...4 G-function 4. Position 5. Speed 6. 1...3 M-function / D-number	index1: 0 Min: - 2147483647 Max: 2147483647 Unit: - Indices: 6 Type: I4	Menus: - Parameter menu + Technology + Positioning - Upread/free access Changeable in: - Drive setting - Ready
U761 AutomaticRecord 2761	The automatic record stored in the EEPROM is displayed on parameters. The automatic record consists of the following data: 1. Program number / continuation number / record number 2. Validity bits of functions or values 3. 1...4 G-function 4. Position 5. Speed 6. 1...3 M-function / D-number	index1: 0 Min: - 2147483647 Max: 2147483647 Unit: - Indices: 6 Type: I4	Menus: - Parameter menu + Technology + Positioning - Upread/free access Changeable in: - Drive setting - Ready
U762 AutomaticRecord 2762	The automatic record stored in the EEPROM is displayed on parameters. The automatic record consists of the following data: 1. Program number / continuation number / record number 2. Validity bits of functions or values 3. 1...4 G-function 4. Position 5. Speed 6. 1...3 M-function / D-number	index1: 0 Min: - 2147483647 Max: 2147483647 Unit: - Indices: 6 Type: I4	Menus: - Parameter menu + Technology + Positioning - Upread/free access Changeable in: - Drive setting - Ready
U763 AutomaticRecord 2763	The automatic record stored in the EEPROM is displayed on parameters. The automatic record consists of the following data: 1. Program number / continuation number / record number 2. Validity bits of functions or values 3. 1...4 G-function 4. Position 5. Speed 6. 1...3 M-function / D-number	index1: 0 Min: - 2147483647 Max: 2147483647 Unit: - Indices: 6 Type: I4	Menus: - Parameter menu + Technology + Positioning - Upread/free access Changeable in: - Drive setting - Ready

Parameter	Description	Data	Read/write
U764 AutomaticRecord 2764	The automatic record stored in the EEPROM is displayed on parameters. The automatic record consists of the following data: 1. Program number / continuation number / record number 2. Validity bits of functions or values 3. 1...4 G-function 4. Position 5. Speed 6. 1...3 M-function / D-number	index1: 0 Min: - 2147483647 Max: 2147483647 Unit: - Indices: 6 Type: I4	Menus: - Parameter menu + Technology + Positioning - Upread/free access Changeable in: - Drive setting - Ready
U765 AutomaticRecord 2765	The automatic record stored in the EEPROM is displayed on parameters. The automatic record consists of the following data: 1. Program number / continuation number / record number 2. Validity bits of functions or values 3. 1...4 G-function 4. Position 5. Speed 6. 1...3 M-function / D-number	index1: 0 Min: - 2147483647 Max: 2147483647 Unit: - Indices: 6 Type: I4	Menus: - Parameter menu + Technology + Positioning - Upread/free access Changeable in: - Drive setting - Ready
U766 AutomaticRecord 2766	The automatic record stored in the EEPROM is displayed on parameters. The automatic record consists of the following data: 1. Program number / continuation number / record number 2. Validity bits of functions or values 3. 1...4 G-function 4. Position 5. Speed 6. 1...3 M-function / D-number	index1: 0 Min: - 2147483647 Max: 2147483647 Unit: - Indices: 6 Type: I4	Menus: - Parameter menu + Technology + Positioning - Upread/free access Changeable in: - Drive setting - Ready
U767 AutomaticRecord 2767	The automatic record stored in the EEPROM is displayed on parameters. The automatic record consists of the following data: 1. Program number / continuation number / record number 2. Validity bits of functions or values 3. 1...4 G-function 4. Position 5. Speed 6. 1...3 M-function / D-number	index1: 0 Min: - 2147483647 Max: 2147483647 Unit: - Indices: 6 Type: I4	Menus: - Parameter menu + Technology + Positioning - Upread/free access Changeable in: - Drive setting - Ready
U768 AutomaticRecord 2768	The automatic record stored in the EEPROM is displayed on parameters. The automatic record consists of the following data: 1. Program number / continuation number / record number 2. Validity bits of functions or values 3. 1...4 G-function 4. Position 5. Speed 6. 1...3 M-function / D-number	index1: 0 Min: - 2147483647 Max: 2147483647 Unit: - Indices: 6 Type: I4	Menus: - Parameter menu + Technology + Positioning - Upread/free access Changeable in: - Drive setting - Ready
U769 AutomaticRecord 2769	The automatic record stored in the EEPROM is displayed on parameters. The automatic record consists of the following data: 1. Program number / continuation number / record number 2. Validity bits of functions or values 3. 1...4 G-function 4. Position 5. Speed 6. 1...3 M-function / D-number	index1: 0 Min: - 2147483647 Max: 2147483647 Unit: - Indices: 6 Type: I4	Menus: - Parameter menu + Technology + Positioning - Upread/free access Changeable in: - Drive setting - Ready

Parameter	Description	Data	Read/write
U789* Q.Multiplexer 2 2789	Source for the binectors of the multiplexer with 8 channels: Index 1 : Signal selection Bit 0 Index 2 : Signal selection Bit 1 Index 3 : Signal selection Bit 2 Index 4 : Enable signal selection	index1: 0 Unit: - Indices: 4 Type: L2 ,B	Menus: - Parameter menu + Free blocks - Upread/free access Changeable in: - Drive setting
U790* Q.Multiplexer 2 2790	The parameter defines the connector inputs of the multiplexer with 8 channels: Index 1 : Input 1 to Index 8 : Input 8	index1: 0 Unit: - Indices: 8 Type: L2 ,K ,K	Menus: - Parameter menu + Free blocks - Upread/free access Changeable in: - Drive setting
U791* Q.Multiplexer 3 2791	Source for the binectors of the multiplexer with 8 channels: Index 1 : Signal selection Bit 0 Index 2 : Signal selection Bit 1 Index 3 : Signal selection Bit 2 Index 4 : Enable signal selection	index1: 0 Unit: - Indices: 4 Type: L2 ,B	Menus: - Parameter menu + Free blocks - Upread/free access Changeable in: - Drive setting
U792* Q.Multiplexer 3 2792	The parameter defines the connector inputs of the multiplexer with 8 channels: Index 1 : Input 1 to Index 8 : Input 8	index1: 0 Unit: - Indices: 8 Type: L2 ,K ,K	Menus: - Parameter menu + Free blocks - Upread/free access Changeable in: - Drive setting
U793* Q.Multiplexer 4 2793	Source for the binectors of the multiplexer with 8 channels: Index 1 : Signal selection Bit 0 Index 2 : Signal selection Bit 1 Index 3 : Signal selection Bit 2 Index 4 : Enable signal selection	index1: 0 Unit: - Indices: 4 Type: L2 ,B	Menus: - Parameter menu + Free blocks - Upread/free access Changeable in: - Drive setting
U794* Q.Multiplexer 4 2794	The parameter defines the connector inputs of the multiplexer with 8 channels: Index 1 : Input 1 to Index 8 : Input 8	index1: 0 Unit: - Indices: 8 Type: L2 ,K ,K	Menus: - Parameter menu + Free blocks - Upread/free access Changeable in: - Drive setting
U795* MechGearExEncod 2795	The parameter defines the mechanical transmission ratio between the load side and the encoder side. Index 1: Numerator = Load rotations Index 2: Denominator = Encoder rotations [Function diagram 333]	index1: 1 Min: 1 Max: 1048575 Unit: - Indices: 2 Type: O4	Menus: - Parameter menu + Free blocks - Upread/free access Changeable in: - Drive setting
U796* Q.CoPosTrackEx 2796	Input signals for the free block "Start position of external encoder" Index 1: Source for the double word in which the revolutions and overflow counters are stored in non-volatile memory. Index 2: Reserve [Function diagram 333]	index1: 0 Unit: - Indices: 2 Type: L2 ,K ,K	Menus: - Parameter menu + Free blocks - Upread/free access Changeable in: - Drive setting
U797* Q.BiPosTrackEx 2797	Definition of the input binectors for the free block "Start position of external encoder" Index 1: Reset overflow counter Index 2: Reserve [Function diagram 333]	index1: 0 Unit: - Indices: 2 Type: L2 ,B	Menus: - Parameter menu + Free blocks - Upread/free access Changeable in: - Drive setting

Parameter	Description	Data	Read/write
U798* ConfLTrackExEnco 2798	Configuration of position tracking (motor encoder): Index 1: 0=rotary axis, 1=linear axis Index 2: Number of overflows to be tracked for the linear axis. A maximum of 15 encoder overflows can be tracked. Function diagrams -327- and -333-	index1: 0 Min: 0 Max: 15 Unit: - Indices: 2 Type: O2	Menus: - Parameter menu + Free blocks - Upread/free access Changeable in: - Drive setting
n799 StatLTrackExEnco 2799	The parameter shows the status of the position tracking for the external encoder. Index 1: Current status of the revolution counter Index 2: Current status of the overflow counter Index 3: Value transferred to the position control from the motor encoder during acceleration [Function diagram 333]	Dec.Plc.: 0 Unit: - Indices: 4 Type: I4	Menus: - Parameter menu + Free blocks - Upread/free access
U800* Q.Setpt.Extrapol 2800	Extrapolator input Index 1: Position setpoint input [LU] Index 2: Speed setpoint input [%] In function diagram 171	index1: 0 Unit: - Indices: 2 Type: L2 ,K ,K	Menus: - Parameter menu + Free blocks - Upread/free access Changeable in: - Drive setting
U801* Q.Expol.Error 2801	Input signal for execution of extrapolation, in the event of disturbance of communications. In function diagram 171	Init: 0 Unit: - Indices: - Type: L2 ,B	Menus: - Parameter menu + Free blocks - Upread/free access Changeable in: - Drive setting
U802* AxisCycle.Expol 2802	Axis cycle length of the position setpoint extrapolator in [LU] Function diagram [XXX.X]	Init: 4096 Min: 0 Max: 2147483647 Unit: - Indices: - Type: I4	Menus: - Parameter menu + Free blocks - Upread/free access Changeable in: - Drive setting
U803* Q.SL-Encoder 2803	Simolink encoder Index 1: Setpoint Index 2: Offset Index 3: Actual value Index 4: Actual speed	index1: 0 Unit: - Indices: 4 Type: L2 ,K ,K	Menus: - Parameter menu + Free blocks - Upread/free access Changeable in: - Drive setting
U804* Q.SL Encoder act 2804	Activate Simulink encoder	Init: 0 Unit: - Indices: - Type: L2 ,B	Menus: - Parameter menu + Free blocks - Upread/free access Changeable in: - Drive setting
U805* SL Encoder AZL 2805	Axis cycle length for Simulink encoder	Init: 32768 Min: 1 Max: 2147483647 Unit: - Indices: - Type: I4	Menus: - Parameter menu + Free blocks - Upread/free access Changeable in: - Drive setting - Ready
U806* SLE V Rtd 2806	Parameter for rated speed input in [1000 LU/min] for the Simolink encoder.	Init: 0,00 Min: 0,00 Max: 20000000,00 Unit: - Indices: - Type: I4	Menus: - Parameter menu + Free blocks - Upread/free access Changeable in: - Drive setting - Ready

Parameter	Description	Data	Read/write
U807 SLE DeadtimeComp 2807	Parameter for input of the time contant for the dead time compensation of the Simolink encoder.	Init: 0,00 Min: -100,00 Max: 100,00 Unit: ms Indices: - Type: I2	Menus: - Parameter menu + Free blocks - Upread/free access Changeable in: - Drive setting - Ready
U810* MechGearEncoder 2810	The parameter defines the mechanical transmission ratio between the motor and the load side. Index 1 Numerator = Load revolutions Index 2 Denominator = Motor revolutions [Function diagram 327]	index1: 1 Min: 1 Max: 1048575 Unit: - Indices: 2 Type: O4	Menus: - Parameter menu + Free blocks - Upread/free access Changeable in: - Drive setting
U811* Q.KoPosTrackMo 2811	Input signals for the free block "Starting position of motor encoder" Index 1: Source for the memory double word in which the speed and overflow counters are secured against power system failure. >Index 2: Reserve [Function diagram 327]	index1: 0 Unit: - Indices: 2 Type: L2 ,K ,K	Menus: - Parameter menu + Free blocks - Upread/free access Changeable in: - Drive setting
U812* Q.BiPosTrackMo 2812	Definition of the input binectors for the free block "Starting position of motor encoder" Index 1: Reset overflow counter Index 2: Reserve [Function diagram 327]	index1: 0 Unit: - Indices: 2 Type: L2 ,B	Menus: - Parameter menu + Free blocks - Upread/free access Changeable in: - Drive setting
U813* ConfLTrackEncder 2813	Configuration of position tracking (motor encoder): Index 1: 0=rotary axis, 1=linear axis Index 2: Number of overflows to be tracked for the linear axis. A maximum of 15 encoder overflows can be tracked. Function diagrams -327- and -333-	index1: 0 Min: 0 Max: 15 Unit: - Indices: 2 Type: O2	Menus: - Parameter menu + Free blocks - Upread/free access Changeable in: - Drive setting
n814 StatLTrackEncder 2814	The parameter displays the status of the position tracking for the motor encoder. Index 1: Current status of the revolution counter Index 2: Current status of the overflow counter Index 3: Value transferred to the position detection motor encoder on ramp up [Function diagram 327]	Dec.Plc.: 0 Unit: - Indices: 4 Type: I4	Menus: - Parameter menu + Free blocks - Upread/free access
U815* Q.EHlEncoder1 LU 2815	Connector inputs of the 1st single ramp generator (32 bit) Index 1: Source for 16 bit word Index 2: Source for 32 bit word Index 3: Source for setting value [Function diagram 786a]	index1: 0 Unit: - Indices: 3 Type: L2 ,K ,K	Menus: - Parameter menu + Free blocks - Upread/free access Changeable in: - Drive setting

Parameter	Description	Data	Read/write
U816* Q.EHlEncoder1 S 2816	Connector inputs of the 1st single ramp generator (32 bit) Index 1: Selection DeltaLU Index 2: MOP enable Index 3: MOP + Index 4: MOP - Index 5: Set output [Function diagram 786a]	index1: 0 Unit: - Indices: 5 Type: L2 ,B	Menus: - Parameter menu + Free blocks - Upread/free access Changeable in: - Drive setting
U817* EHlEncod1 DeltaL 2817	Parameter Delta LU for 1st single ramp generator (32 bit) [Function diagram 786a]	index1: 0 Min: 0 Max: 2147483647 Unit: - Indices: 2 Type: O4	Menus: - Parameter menu + Free blocks - Upread/free access Changeable in: - Drive setting - Ready
U818* EHlEncoder1 LU 2818	Parameter input LU for 1st single ramp generator (32 bit) Index 1: Upper limit Index 2: Lower limit Index 3: Fixed setpoint setting value [Function diagram 786a]	index1: 2147483647 Min: - 2147483647 Max: 2147483647 Unit: - Indices: 3 Type: I4	Menus: - Parameter menu + Free blocks - Upread/free access Changeable in: - Drive setting - Ready
U819* Q.AddDispEnable 2819	Binector source for positioning enable [Function diagram 794]	Init: 1 Unit: - Indices: - Type: L2 ,B	Menus: - Parameter menu + Setpoint channel + Free blocks - Upread/free access Changeable in: - Drive setting
U820* AddDispl ACL 2820	The axis cycle length is entered here that the sychnonization block receives at the input. For example, the axis cycle length of the virtual master axis U687 or of the real master U425.1. In contrast, zero is entered for a linear axis.	Init: 4096 Min: 0 Max: 2147483647 Unit: - Indices: - Type: I4	Menus: - Parameter menu + Free blocks - Upread/free access Changeable in: - Drive setting
U821* Q.Add.DisplAngle 2821	Source for displacement angle Index 1: Input of additive relative displacement angle Index 2: Set input of additive relative displacement angle	index1: 0 Unit: - Indices: 2 Type: L2 ,K ,K	Menus: - Parameter menu + Free blocks - Upread/free access Changeable in: - Drive setting
U822* Src AddDisplTrig 2822	Index 1: 0>1 increase displacement angle Index 2: 0>1 decrease displacement angle	index1: 0 Unit: - Indices: 2 Type: L2 ,B	Menus: - Parameter menu + Free blocks - Upread/free access Changeable in: - Drive setting
U823* AddDisplMode 2823	0 = Displacement is processed as absolute 1 = Displacement is processed with residual-displacement evaluation.	Init: 0 Min: 0 Max: 1 Unit: - Indices: - Type: O2	Menus: - Parameter menu + Free blocks - Upread/free access Changeable in: - Drive setting
U824* Src AddDispV-fac 2824	Speed adjustment in percent for U825.2	Init: 1 Unit: - Indices: - Type: L2 ,K ,K	Menus: - Parameter menu + Free blocks - Upread/free access Changeable in: - Drive setting - Ready

Parameter	Description	Data	Read/write
U825* Offset Corr Par 2825	Index 1: Acceleration of displacement angle correction [1000*LU/s^2] Index 2: Speed of displacement angle correction [1000*LU/min] Index 3: Rated speed referred to by the output speed in percent (KK832) [1000*LU/min] In function diagram 794	index1: 0,00 Min: 0,00 Max: 20000000,00 Unit: - Indices: 3 Type: O4	Menus: - Parameter menu + Free blocks - Upread/free access Changeable in: - Drive setting
n826 VisPar Displ Act 2826	Visualization parameter additive offset angle [in function diagram 794] Index 1: Remaining offset to add (KK833) Index 2: Current offset (KK834) Index 3: Output total offset (KK835)	Dec.Plc.: 0 Unit: - Indices: 3 Type: I4	Menus: - Parameter menu + Free blocks + Technology + Synchronism - Upread/free access
U827* Set_DispAngle 2827	With rising edge at the input, the current displacement is set to the setting value of the connector U678.2 (setting input).	Init: 0 Unit: - Indices: - Type: L2 ,B	Menus: - Parameter menu - Upread/free access Changeable in: - Drive setting - Ready
U828* Q.DisplAdd 2828	Input of the modulo displacement adder [Function diagram 794a]	index1: 0 Unit: - Indices: 4 Type: L2 ,K ,K	Menus: - Parameter menu + Free blocks - Upread/free access Changeable in: - Drive setting
n829 VisPar DisAddMod 2829	Visualization parameter (KK 836) Output of displacement adder with limitation to ACL [LU] 32 bit [Function diagram 794a]	Dec.Plc.: 0 Unit: - Indices: - Type: I4	Menus: - Parameter menu + Free blocks - Upread/free access
U830* AZL DisplaceAdd 2830	Axis cycle length for displacement adder [Function diagram 794a]	Init: 4096 Min: 0 Max: 2147483647 Unit: - Indices: - Type: O4	Menus: - Parameter menu + Free blocks - Upread/free access Changeable in: - Drive setting - Ready
U831* Q.DisplAdd_2 2831	Input of modulo displacement adder 2 [Function diagram 794a]	index1: 0 Unit: - Indices: 4 Type: L2 ,K ,K	Menus: - Parameter menu + Free blocks - Upread/free access Changeable in: - Drive setting
n832 Vis.DispAddMod 2 2832	Visualization parameter (KK 867) Output of displacement adder 2 with limitation to ACL [LU] 32 bit [Function diagram 794a]	Dec.Plc.: 0 Unit: - Indices: - Type: I4	Menus: - Parameter menu + Free blocks - Upread/free access
U833* ACL DisplAdd_2 2833	Axis cycle length for displacement adder 2 [Function diagram 794a]	Init: 4096 Min: 0 Max: 2147483647 Unit: - Indices: - Type: O4	Menus: - Parameter menu + Free blocks - Upread/free access Changeable in: - Drive setting - Ready

Parameter	Description	Data	Read/write
U834* Q.DisplAdd_3 2834	Input of modulo displacement adder 3 [Function diagram 794a]	index1: 0 Unit: - Indices: 4 Type: L2 ,K ,K	Menus: - Parameter menu + Free blocks - Upread/free access Changeable in: - Drive setting
n835 Vis.DispAddMod_3 2835	Visualization parameter (KK 868) Output of displacement adder 3 with limitation to ACL [LU] 32 bit [Function diagram 794a]	Dec.Plc.: 0 Unit: - Indices: - Type: I4	Menus: - Parameter menu + Free blocks - Upread/free access
U836* ACL DisplAdd_3 2836	Axis cycle length for displacement adder 3 [Function diagram 794a]	Init: 4096 Min: 0 Max: 2147483647 Unit: - Indices: - Type: O4	Menus: - Parameter menu + Free blocks - Upread/free access Changeable in: - Drive setting - Ready
U837* Lower Uzk 2837	Range for voltage Uzk with reduced DC link voltage. Error message F002 precharging is not triggered in this voltage range. If the DC link voltage is lower than the value parameterized in Index 2, binector B856 goes high. Indx 1: Minimum Uzk with reduced DC link voltage. Index 2: Maximum Uzk with reduced DC link voltage. The value in Index 2 must always be greater than or equal to the value in Index 1. The function for operation with reduced DC link voltages active only if U838 = 1. In the case of operation with reduced DC link voltage (function diagram 501), the following is to be kept in mind. Proper functioning of the braking chopper cannot be guaranteed if the DC link voltage Uzk rises from the reduced voltage range to the braking chopper turn-on threshold in less than 3 s. Under such circumstances, the chopper can fail to turn on and therefore trip out the converter or inverter with fault F006 "Overvoltage".	index1: 380 Min: 10 Max: 510 Unit: V Indices: 2 Type: O2	Menus: - Parameter menu + Functions - Drive setting - Upread/free access Changeable in: - Drive setting
U838* Q.Sel.abg. Uzk 2838	Parameter for selection of a binector for reading in the signal for releasing operation with reduced DC link voltage.	Init: 0 Unit: - Indices: - Type: L2 ,B	Menus: - Parameter menu + Functions - Drive setting - Upread/free access Changeable in: - Drive setting - Drive setting
U840* 32BGear 1 ACL 2840	Axis cycle lengths of the 32-bit gear. Index 1: Axis cycle length input Index 2: Axis cycle length output [Function diagram 786c]	index1: 4096 Min: 0 Max: 2147483647 Unit: - Indices: 2 Type: O4	Menus: - Parameter menu + Free blocks - Upread/free access Changeable in: - Drive setting - Ready
U841* 32BGear 1 VNorm 2841	Normalization of the 32-bit gear Index 1: Normalization speed input Index 2: Normalization speed output [Function diagram 786c]	index1: 0,00 Min: 0,00 Max: 20000000,00 Unit: - Indices: 2 Type: O4	Menus: - Parameter menu + Technology + Synchronism - Upread/free access Changeable in: - Drive setting - Ready

Parameter	Description	Data	Read/write
U842* Q.32BGear1 Setp 2842	Setpoint sources of the 32-bit gear Index 1: Distance setpoint input Index 2: Speed setpoint input Index 3: Setting value output [Function diagram 786c]	index1: 0 Unit: - Indices: 3 Type: L2 ,K ,K	Menus: - Parameter menu + Free blocks - Upread/free access Changeable in: - Drive setting
U843* Q.32BGear 1 Trig 2843	Trigger input "Set output" of the 32-bit gear [Function diagram 786c]	Init: 0 Unit: - Indices: - Type: L2 ,B	Menus: - Parameter menu + Free blocks - Upread/free access Changeable in: - Drive setting
U844* Q.32BGear1 Fact 2844	Factors of the 32-bit gear Index 1: Numerator Index 2: Denominator [Function diagram 786c]	index1: 0 Unit: - Indices: 2 Type: L2 ,K ,K	Menus: - Parameter menu + Free blocks - Upread/free access Changeable in: - Drive setting
U845* 32BGear 2 ACL 2845	Axis cycle lengths of the 32-bit gear. Index 1: Axis cycle length input Index 2: Axis cycle length output [Function diagram 786c]	index1: 4096 Min: 0 Max: 2147483647 Unit: - Indices: 2 Type: O4	Menus: - Parameter menu + Free blocks - Upread/free access Changeable in: - Drive setting - Ready
U846* 32BGear 2 VNorm 2846	Normalization of the 32-bit gear Index 1: Normalization speed input Index 2: Normalization speed output [Function diagram 786c]	index1: 0,00 Min: 0,00 Max: 20000000,00 Unit: - Indices: 2 Type: O4	Menus: - Parameter menu + Technology + Synchronism - Upread/free access Changeable in: - Drive setting - Ready
U847* Q.32BGear 2 Setp 2847	Setpoint sources of the 32-bit gear Index 1: Distance setpoint input Index 2: Speed setpoint input Index 3: Setting value output [Function diagram 786c]	index1: 0 Unit: - Indices: 3 Type: L2 ,K ,K	Menus: - Parameter menu + Free blocks - Upread/free access Changeable in: - Drive setting
U848* Q.32BGear 2 Trig 2848	Trigger input "Set output" of the 32-bit gear [Function diagram 786c]	Init: 0 Unit: - Indices: - Type: L2 ,B	Menus: - Parameter menu + Free blocks - Upread/free access Changeable in: - Drive setting
U849* Q.32BGear 2 Fact 2849	Factors of the 32-bit gear Index 1: Numerator Index 2: Denominator [Function diagram 786c]	index1: 0 Unit: - Indices: 2 Type: L2 ,K ,K	Menus: - Parameter menu + Free blocks - Upread/free access Changeable in: - Drive setting
U850* Q.EPos POS 2850	Source basic positioning position setpoints Index1: Position setpoint [LU] Index2: Position actual value [LU] Index3: Position setting value [LU] Index4: Position actual value [LU] Index5: Checkback signal INPUT [LU] In function diagram 789b.1	index1: 875 Unit: - Indices: 5 Type: L2 ,K ,K	Menus: - Parameter menu + Free blocks - Upread/free access Changeable in: - Drive setting

Parameter	Description	Data	Read/write
U851* Q.EPos V-Max 2851	Source basic positioner V-Max [%] In function diagram 789a.1	Init: 874 Unit: - Indices: - Type: L2 ,K ,K	Menus: - Parameter menu + Free blocks - Upread/free access Changeable in: - Drive setting
U852* Q.EPos A-Max 2852	Source basic positioner A-Max [%] Index1: Acceleration adjustment Index2: Deceleration adjustment In function diagram 789b.3	index1: 872 Unit: - Indices: 2 Type: L2 ,K	Menus: - Parameter menu + Free blocks - Upread/free access Changeable in: - Drive setting
U853* Q.EPos STW SETUP 2853	Source basic positioning SETUP (Setup: position controlled jogging) Index1: D_FWD_ACT Index2: D_BWD_ACT Index3: SETUP	index1: 875 Unit: - Indices: 3 Type: L2 ,B	Menus: - Parameter menu + Free blocks - Upread/free access Changeable in: - Drive setting
U854* Q.EPos STW POS 2854	Source basic positioning POS Index1: POS enable (V<>0) Index2: Absolute/relative positioning In function diagram 789b.1	index1: 872 Unit: - Indices: 2 Type: L2 ,B	Menus: - Parameter menu + Free blocks - Upread/free access Changeable in: - Drive setting
U855* Q.EPos Set 2855	Source basic positioning SET Index1: Set trigger setting value (U850.3) Index2: ENABLE POS 0 (setpoint = actual value) KK882=U850.3 tracking mode In function diagram 789b.1	index1: 0 Unit: - Indices: 2 Type: L2 ,B	Menus: - Parameter menu + Free blocks - Upread/free access Changeable in: - Drive setting
U856* EPos V-Norm 2856	Basic positioning normalization speed norm. maximum speed in [1000LU/min] Special feature: Input with two decimal places Calculation: Maximum speed [n/min] (P205) * resolution 2^(P171) * PFSF (P169,P170 or P180,P181) In function diagram 789b.5	Init: 12288,00 Min: 0,00 Max: 20000000,00 Unit: - Indices: - Type: O4	Menus: - Parameter menu + Free blocks - Upread/free access Changeable in: - Drive setting - Ready
U857* EPos Norm.A-Max 2857	Basic positioner norm. maximum acceleration/deceleration in [1000LU/s^2] Special feature: Input with two decimal places Calculation: (Maximum speed [n/min] * resolution (P171) * PFSF) / Time in which the maximum speed is to be attained [sec.] In function diagram 789b.4	Init: 204,00 Min: 0,00 Max: 20000000,00 Unit: - Indices: - Type: O4	Menus: - Parameter menu + Free blocks - Upread/free access Changeable in: - Drive setting - Ready
U858* EPos Linear/Rnd 2858	The axis cycle length is entered here for processing by the block. On the other hand, zero is entered for a linear axis. Exception: Index 2 applies to the value -1 for transfer from Index 1. (Index 2: -1 => Index 2 = Index 1). In function diagram 789b.5	index1: 4096 Min: -1 Max: 2147483647 Unit: - Indices: 2 Type: I4	Menus: - Parameter menu + Free blocks - Upread/free access Changeable in: - Drive setting - Ready

Parameter	Description	Data	Read/write
U859* EPos Window OK 2859	Basic positioning window: Indicates from what position + window width the signal POS_OK is given In function diagram 789b.4	Init: 0 Min: 0 Max: 2147483647 Unit: - Indices: - Type: I4	Menus: - Parameter menu + Free blocks - Upread/free access Changeable in: - Drive setting - Ready
n860 EPos V-Visual % 2860	Visualization parameter single positioner speed setpoints [%] Index 1: Valid speed setpoints [FP788a] Index 2: Active speed setpoints [FP788b] Index 3: Output speed setpoints precontrol value position control [Function diagram 788c]	Dec.Plc.: 3 Unit: % Indices: 3 Type: I4	Menus: - Parameter menu + Free blocks - Upread/free access
n861 EPos S-Vis[LU] 2861	Visualization parameter single positioner Position setpoints [LU] Index 1: Position setpoints set setpoint [FD788a] Index 2: Position setpoints of positioner [FD788b] Index 3: Position setpoints output position control [FD788c]	Dec.Plc.: 0 Unit: - Indices: 4 Type: I4	Menus: - Parameter menu + Free blocks - Upread/free access
n862 EPos RM-Signal 2862	The parameter shows the basic positioner status in the form of a status signal. Index 1: Low word of the basic positioner status signal Index 2: High word of the basic positioner status signal Index 1: Input EPos (K888) BIT0 = ENABLE_POS BIT1 = RESERVED BIT2 = POS BIT3 = SETUP BIT4 = POS_TYP_ACT (old: ABS_REL) BIT5 = D_FWD_ACT BIT6 = D_BWD_ACT BIT7 = EXT_REF_OK B888 or B210 = 1 BIT8 = EXT_POS_OK BIT9 = SET_TRIG BIT10 = Internal POS_OK (position reached) Index 2: Output EPos and homing function (K889) BIT16 = B860 [POS_OK] BIT17 = B861 [POS_RUN] BIT18 = B862 [RFG_RUN] BIT19 = B863 [RU_ACT] BIT20 = B864 [RD_ACT] BIT21 = B866 [FWD_RUN] BIT22 = B867 [BWD_RUN] BIT23 = B865 [POS_DELTA] BIT24 = B868 [SW_E_PLUS] BIT25 = B869 [SW_E_MINUS] BIT26 = B888 [ARFD] BIT27 = B892 [F_REF_WD] In function diagram 789b.7	Dec.Plc.: 0 Unit: - Indices: 2 Type: V2	Menus: - Parameter menu + Technology + Synchronism - Upread/free access

Parameter	Description	Data	Read/write
U863* Q.EPos ExtPOSOK 2863	Source for external POS OK signals Index 1: POS OK enable external (1) Index 2: Checkback ARFD (axis referenced) Index 3: Checkback reference point acquired [330.7] (B210) Note: Index 2 & 3 are ORed, and the software limit switches are activated with parameter software limit switch U865.1, 2 <> 0 and U858 AZL = 0. In function diagram 789b.1	index1: 1 Unit: - Indices: 3 Type: L2 ,B	Menus: - Parameter menu + Free blocks - Upread/free access Changeable in: - Drive setting
U864 EPos Displ POSOK 2864	Adjustable delay time of the signal [POS_OK] (B860) derived from the window evaluation of U859.x and actual value. In function diagram 789b.6	Init: 0,00 Min: 0,00 Max: 100,00 Unit: s Indices: - Type: O2	Menus: - Parameter menu + Free blocks - Upread/free access Changeable in: - Drive setting - Ready
U865 EPos SWE 2865	Software limit switch POS/SETUP Index1: Software limit switch positive Index2: Software limit switch negative In function diagram 789b.2	index1: 0 Min: -2147483647 Max: 2147483647 Unit: - Indices: 2 Type: I4	Menus: - Parameter menu + Free blocks - Upread/free access Changeable in: - Drive setting - Ready
U866* Q.EPos STW SET 2866	Control word EP-SET: Index 1: ENABLE_POS_REF = Enable Pos-/Ref.block Index 2: REF_ON = Homing ON Index 3: POS_ON = Positioning ON Index 4: SETUP_ON = Setup ON Index 5: POS_TYP = Absolute/relative positioning Index 6: D_FWD = Direction forward (positive) Index 7: D_BWD = Direction backward (negative) Index 8: SPV_RIE = Transfer trigger Index 9: SPV_RIE_TYP = Transfer type setting values triggered/constant Index 10: REF_TYP = Flying/sequence control homing Index 11: REF_STOP_FWD = Reverse cam home fwd.(positive) Index 12: REF_STOP_BWD = Reverse cam home bwd.(negative) Index 13: REF_STOP = Stop homing e.g. axis home positon ARFD Index 14: REF_D = Preferred direction for home position acquisition (0=BWD/1=FWD) In function diagram 789a.2	index1: 220 Unit: - Indices: 14 Type: L2 ,B	Menus: - Parameter menu + Free blocks - Upread/free access Changeable in: - Drive setting
U867* Q.EPos SET POS 2867	Source basic positioning position setpoints Index1: Position setpoint [LU] Index2: Position actual value [LU] Index3: Position setting value [LU] Index4: Position actual value [LU] Index5: Checkback signal INPUT [LU] In function diagram 789b.1	Init: 879 Unit: - Indices: - Type: L2 ,K ,K	Menus: - Parameter menu + Free blocks - Upread/free access Changeable in: - Drive setting
U868* Q.EPosSET V-Max 2868	Source basic positioner V-Max [%] In function diagram 789a.1	Init: 876 Unit: - Indices: - Type: L2 ,K ,K	Menus: - Parameter menu + Free blocks - Upread/free access Changeable in: - Drive setting

Parameter	Description	Data	Read/write
U869* Q.EPosSET A-Max 2869	Source basic positioner A-Max [%] Index1: Acceleration adjustment Index2: Deceleration adjustment In function diagram 789b.3	index1: 877 Unit: - Indices: 2 Type: L2 ,K	Menus: - Parameter menu + Free blocks - Upread/free access Changeable in: - Drive setting
n870 EPos STW Status 2870	The parameter shows the basic positioner status in the form of a status signal. [FD789a] Index 1: Input Setpoint / Mode (as K886) BIT0 = ENABLE_POS/REF BIT1 = REF_ON BIT2 = POS_ON BIT3 = SETUP_ON BIT4 = POS_TYP BIT5 = D_FWD BIT6 = D_BWD BIT7 = SPV_RIE BIT8 = SPV_RIE_TYP BIT9 = REF_TYP BIT10 = REF_BWD_STOP BIT11 = REF_FWD_STOP BIT12 = REF_STOP BIT13 = REF_D Index 2: Output Setpoint / Mode (as K887) BIT 0 = B870 [ENABLE_POS_REF] BIT 1 = B871 [REF] BIT 2 = B872 [POS] BIT 3 = B873 [SETUP] BIT 4 = B874 [POS_TYPE_ACT] BIT 5 = B875 [D_FWD_ACT] BIT 6 = B876 [D_BWD_ACT] BIT 7 = B877 [PSR] BIT 8 = ---------- BIT 9 = B893 [REF_DRIVE] (homing active) BIT 10 = B894 [SPV_RIE_ACKN] BIT 11 = B895 [REF_D]	Dec.Plc.: 0 Unit: - Indices: 2 Type: V2	Menus: - Parameter menu - Upread/free access
n871 EPos A-Visual % 2871	Visualization parameter acceleration [%] single positioning Index 1: UP (SET setpoint) Index 1: DOWN (SET setpoint) Index 1: UP (positioner) Index 1: DOWN (positioner) [Function diagram 788b,c]	Dec.Plc.: 3 Unit: % Indices: 4 Type: I4	Menus: - Parameter menu + Free blocks - Upread/free access

Parameter	Description	Data	Read/write
U872 EPos PlayComp. 2872	Backlash compensation: Parameter value <> 0: The backlash compensation serves to compensate a mechanical backlash. In the case of an indirect measuring system (encoder on motor), after every reversal of direction the backlash is first traversed before effective (real) axis motion takes place. Positioning errors are the result. A preferred position of the backlash compensation is input in the form of a sign. That is: Positive value = preferred position positive => No backlash is taken into account if the first direction of travel after power up is positive. Negative value = preferred position negative => No backlash is taken into account if the first direction of travel after power up is negative. Parameter value = 0: There is no backlash compensation. In function diagram 789b.3	Init: 0 Min: -2147483648 Max: 2147483647 Unit: - Indices: - Type: I4	Menus: - Parameter menu + Free blocks - Upread/free access Changeable in: - Drive setting - Ready
U873 EPos FK Proc. 2873	Fixed connectors [%] for basic positioning: Index 1: Speed setpoint [%] Index 2: Acceleration setpoint [%] Index 3: Deceleration setpoint [%] In function diagram 789b.1	index1: 100,000 Min: 0,000 Max: 200,000 Unit: % Indices: 3 Type: I4	Menus: - Parameter menu + Free blocks - Upread/free access Changeable in: - Drive setting - Ready
U874* EPos FK POS 2874	Fixed connectors [LU] for basic positioning: Index 1 Position setpoint [LU] Index 2 reference setpoint [LU] Index 1 Function diagram 789a.1 Index 2 Function diagram 789c.1	index1: 0 Min: -2147483647 Max: 2147483647 Unit: - Indices: 2 Type: I4	Menus: - Parameter menu + Free blocks - Upread/free access Changeable in: - Drive setting - Ready
U875* EPos FBin STW 2875	Fixed binectors basic positioner: Index 1: REF_ON = Homing ON Index 2: POS_ON = Positioning ONN Index 3: SETUP_ON = Setup ON Index 4: POS_TYP = Absolute/relative positioning Index 5: D_FWD = Direction forward (positive) Index 6: D_BWD = Direction backward (negative) Index 7: SPV_RIE = Transfer trigger Index 8: SPV_RIE_TYP = Transfer type setting values triggered/constant Index 9: REF_TYP = Flying/sequence control Index 10: REF_D = Preferred direction for home position acquisition (0=BWD/1=FWD) In function diagram 789a.1	index1: 0 Unit: - Indices: 10 Type: L2	Menus: - Parameter menu + Free blocks - Upread/free access Changeable in: - Drive setting - Ready
U876* Q.EPos REF V-IN 2876	Source speed setpoint [%] for position correction/homing block In function diagram 789c.1	Init: 870 Unit: - Indices: - Type: L2 ,K ,K	Menus: - Parameter menu + Free blocks - Upread/free access Changeable in: - Drive setting

Parameter	Description	Data	Read/write
U877* Q.EPos REF POS 2877	Source basic positioning position setpoints for position correction/homing block Index1: Position setpoint [LU] Index2: Position setting value [LU] Index3: Homing pos. value [LU] (reference position) Index4: Position actual value in the case of IRQ measured value memory [LU] (KK120) In function diagram 789c.1	index1: 871 Unit: - Indices: 4 Type: L2 ,K ,K	Menus: - Parameter menu + Free blocks - Upread/free access Changeable in: - Drive setting
U878* Q.EPos STW REF 2878	Source basic positioning correction value/homing (position setpoint/actual value conditioning) Index1: Set position setpoint Index2: ENABLE_REF Index3: Start REF [measured value valid] Index4: Enable REF [REF] Index5: REF_ D[preferred direction REF] Index6: REF_D_EN [preferred direction active] Index7: Measured value OK [measured value valid motor encoder In function diagram 789c.1	index1: 0 Unit: - Indices: 7 Type: L2 ,B	Menus: - Parameter menu + Free blocks - Upread/free access Changeable in: - Drive setting
U879 EPos RefWindow 2879	Basic positioner home position acquisition, window widths. Window active when homing position acquired for the first time (B888= HIGH) Index 1: Inner window Index 2: Outer window In function diagram 789c.1	index1: 0 Min: -2147483647 Max: 2147483647 Unit: - Indices: 2 Type: I4	Menus: - Parameter menu + Free blocks - Upread/free access Changeable in: - Drive setting - Ready
U880* EPos Smooth 2880	Smoothing time for basic positioning. Acts on speed setpoint KK881 and position setpoint KK882 In function diagram 789c.3	Init: 0,000 Min: 0,000 Max: 10,000 Unit: s Indices: - Type: O2	Menus: - Parameter menu + Free blocks - Upread/free access Changeable in: - Drive setting - Ready
U881* Q.EPos Pt1 Adapt 2881	Source for PT1 adaption of the rounding time of U880 0...10.000(s) in percent. The input value of 0...200% is multiplied by the time 0...10.000(s). In function diagram 789c.2	Init: 1 Unit: - Indices: - Type: L2 ,K	Menus: - Parameter menu + Free blocks - Upread/free access Changeable in: - Drive setting
U882* Reset SET-SETP 2882	RESET SET-SETPOINT Input of the SET SETPOINT transfer block [788a]. This input is effective in addition to or linked to POWER ON. The RESET has a static action. LOW => RESET=> y=0 (all valid output values of the set setpoint transfer are reset). In function diagram 789a.5	Init: 1 Unit: - Indices: - Type: L2 ,B	Menus: - Parameter menu + Free blocks - Upread/free access Changeable in: - Drive setting

Parameter	Description	Data	Read/write
U883 EPos REL MOD 2883	Basic positioner Positioning mode for relative: 0 : In the case of relative positioning POS_TYP_ACT=1), the content of the position value of source U850.2 is used. Meaning: In the case of homing on the fly, the corrected setpoint is calculated in with the travel distance (SET=ACTUAL) Note: The correction is performed in the most direct possible way. Meaning: Direction reversal possible. 1 : In the case of relative positioning (POS_TYP_ACT=1), the internal position value S_pos (KK871) is used. Meaning: In the case of homing on the fly, the corrected setpoint is not calculated in with the travel distance (SET<>ACTUAL) Note: The software limit switches no longer refer to the actual value of the measuring system. In function diagram 789b.1	Init: 0 Min: 0 Max: 1 Unit: - Indices: - Type: I2	Menus: - Parameter menu + Free blocks - Upread/free access Changeable in: - Drive setting
n884 EPos DIAG 2884	Visualization parameter for diagnostics	Dec.Plc.: 0 Unit: - Indices: 4 Type: I4	Menus: - Parameter menu + Free blocks - Upread/free access
U890* Tab Y401-Y450 2890	With this parameter, Y interpolation points 401 to 450 are entered in the table. The interpolation values are evaluated only for U615 = 10 to 14. (The X nterpolation points are then assumed to be equidistant.) Only for special applications after consultation with the Applications Center. Function diagram [839.4]	index1: 0 Min: -2147483648 Max: 2147483647 Unit: - Indices: 50 Type: I4	Menus: - Parameter menu + Technology + Synchronism - Upread/free access Changeable in: - Drive setting - Ready
U891* Tab Y451-Y500 2891	With this parameter, Y interpolation points 451 to 500 are entered in the table. The interpolation values are evaluated only for U615 = 10 to 14. Only for special applications after consultation with the Applications Center. Function diagram [839.4]	index1: 0 Min: -2147483648 Max: 2147483647 Unit: - Indices: 50 Type: I4	Menus: - Parameter menu + Technology + Synchronism - Upread/free access Changeable in: - Drive setting - Ready
U892* Tab Y501-Y550 2892	With this parameter, Y interpolation points 501 to 550 are entered in the table. The interpolation values are evaluated only for U615 = 10 to 14. Only for special applications after consultation with the Applications Center. Function diagram [839.4]	index1: 0 Min: -2147483648 Max: 2147483647 Unit: - Indices: 50 Type: I4	Menus: - Parameter menu + Technology + Synchronism - Upread/free access Changeable in: - Drive setting - Ready
U893* Tab Y551-Y600 2893	With this parameter, Y interpolation points 551 to 600 are entered in the table. The interpolation values are evaluated only for U615 = 10 to 14. Only for special applications after consultation with the Applications Center. Function diagram [839.4]	index1: 0 Min: -2147483648 Max: 2147483647 Unit: - Indices: 50 Type: I4	Menus: - Parameter menu + Technology + Synchronism - Upread/free access Changeable in: - Drive setting - Ready

Parameter	Description	Data	Read/write
U894* Tab Y601-Y650 2894	With this parameter, Y interpolation points 601 to 650 are entered in the table. The interpolation values are evaluated only for U615 = 10 to 14. Only for special applications after consultation with the Applications Center. Function diagram [839.4]	index1: 0 Min: -2147483648 Max: 2147483647 Unit: - Indices: 50 Type: I4	Menus: - Parameter menu + Technology + Synchronism - Upread/free access Changeable in: - Drive setting - Ready
U895* Tab Y651-Y700 2895	With this parameter, Y interpolation points 651 to 700 are entered in the table. The interpolation values are evaluated only for U615 = 10 to 14. Only for special applications after consultation with the Applications Center. Function diagram [839.4]	index1: 0 Min: -2147483648 Max: 2147483647 Unit: - Indices: 50 Type: I4	Menus: - Parameter menu + Technology + Synchronism - Upread/free access Changeable in: - Drive setting - Ready
U896* Tab Y701-Y750 2896	With this parameter, Y interpolation points 701 to 750 are entered in the table. The interpolation values are evaluated only for U615 = 10 to 14. Only for special applications after consultation with the Applications Center. Function diagram [839.4]	index1: 0 Min: -2147483648 Max: 2147483647 Unit: - Indices: 50 Type: I4	Menus: - Parameter menu + Technology + Synchronism - Upread/free access Changeable in: - Drive setting - Ready
U897* Tab Y751-Y800 2897	With this parameter, Y interpolation points 751 to 800 are entered in the table. The interpolation values are evaluated only for U615 = 10 to 14. Only for special applications after consultation with the Applications Center. Function diagram [839.4]	index1: 0 Min: -2147483648 Max: 2147483647 Unit: - Indices: 50 Type: I4	Menus: - Parameter menu + Technology + Synchronism - Upread/free access Changeable in: - Drive setting - Ready
n900 ObjectData 2900	Service parameter, only for Siemens personnel Visualization parameter for interconnecting connectors and binectors according to the setting in P2905. The connector and binector parameters and the respective index are listed with which the connector or binector is linked in P2905.2. Index 1 Function number of the first interconnection Index 2 Parameter number Index 3 Index Index 4 Function number of the second interconnection Index 5 Parameter number Index 6 Index	Dec.Plc.: 0 Unit: - Indices: 100 Type: O2	Menus: - Parameter menu - Upread/free access
n901 ObjectData 2901	Service parameter, only for Siemens service personnel	Dec.Plc.: 0 Unit: - Indices: 100 Type: O2	Menus: - Parameter menu - Upread/free access

Parameter	Description	Data	Read/write
U905* ObjectDataBeg 2905	Service parameter, only for Siemens service personnel Parameter for interrogating a connector or binector interconnection. The result can be read out in r2900. Index 1 =2 (read connector); =3 (read binector) Index 2 Connector/binector number (decimal) Index 3 No meaning Index 4 No meaning Index 5 No meaning Note: All connector or binector numbers are hexadecimal values. These have to be converted into decimal values for interrogation.	index1: 0 Min: 0 Max: 65535 Unit: - Indices: 5 Type: O2	Menus: - Parameter menu - Upread/free access Changeable in: - Drive setting - Ready
U910* SlotDeselect 2910 not Compact PLUS	Parameter for deselecting the optional boards in the slots Index 1: Basic board Index 2: Deselection of slot A Index 3: Deselection of slot B Index 4: Deselection of slot C Index 5: Deselection of slot D Index 6: Deselection of slot E Index 7: Deselection of slot F Index 8: Deselection of slot G	index1: 0 Min: 0 Max: 1 Unit: - Indices: 8 Type: O2	Menus: - Parameter menu - Board configuration - Upread/free access Changeable in: - Board configuration
U910* SlotDeselect 2910 Compact PLUS only	Parameter for deselecting the optional boards in the slots Index 1: Basic board Index 2: Deselection of slot A Index 3: Deselection of slot B Index 4: Deselection of slot C	index1: 0 Min: 0 Max: 1 Unit: - Indices: 4 Type: O2	Menus: - Parameter menu - Board configuration - Upread/free access Changeable in: - Board configuration
n911 Board ID 2911 not Compact PLUS	Visualization parameter for displaying the board ID. This ID enables various hardware statuses of the installed electronic boards to be determined. Index 1: Basic board Index 2: Optional board on slot A Index 3: Optional board on slot B Index 4: Optional board on slot C Index 5: Optional board on slot D Index 6: Optional board on slot E Index 7: Optional board on slot F Index 8: Optional board on slot G	Dec.Plc.: 0 Unit: - Indices: 8 Type: O2	Menus: - Parameter menu - Fixed settings - Quick parameterization - Board configuration - Drive setting - Download - Upread/free access - Power section definition
n911 Board ID 2911 Compact PLUS only	Visualization parameter for displaying the board ID. This ID enables various hardware statuses of the installed electronic boards to be determined. Index 1: Basic board Index 2: Optional board on slot A Index 3: Optional board on slot B Index 4: Optional board on slot C	Dec.Plc.: 0 Unit: - Indices: 4 Type: O2	Menus: - Parameter menu + Diagnostics + Messages/displays - Upread/free access
U921* DP V3 Gx_STW 2921	DP V3 encoder control word [FD 172.1] Index 1: G1_STW Bit0-Bit15 Index 2: G2_STW Bit0-Bit15	index1: 0 Unit: - Indices: 2 Type: L2 ,K	Menus: - Parameter menu + Communication + Field bus interfaces - Upread/free access Changeable in: - Drive setting

Parameter	Description	Data	Read/write
U922* DP V3 Enc ActV 2922	PROFIdrive V3 Actual encoder values: [FP 172.1] Index 1: actual position G1 (KK120) Index 2: actual position G2 (KK125) Index 3: position meas. value G1 (KK122) Index 4: position meas. value G2 (KK127) Index 5: Ref. value G1 (KK124) Index 5: Ref. value G2 (KKxxx)	index1: 0 Unit: - Indices: 6 Type: L2 ,K ,K	Menus: - Parameter menu + Communication + Field bus interfaces - Upread/free access Changeable in: - Drive setting
U923* DP V3 E Feedback 2923	PROFIdrive V3 Encoder feedback signal: [FP172.1] Index 1: Ack. Ref.point records motor encoder (B210) Index 2: Ack. Ref.point records motor encoder (B215) Index 3: Ack. Ref.measuring value records motor encoder (B212) Index 4: Ack. Ref.measuring value records motor encoder (B217) Index 5: Source measuring probe 1 (B16) Index 6: Source measuring probe 2 (B18) Index 7: Source measuring value valid motor encoder (B70) Index 8: Source measuring value valid motor encoder (B70)	index1: 210 Unit: - Indices: 8 Type: L2 ,B	Menus: - Parameter menu - Upread/free access Changeable in: - Drive setting
n924 DP V3 Gx Status 2924	PROFIdrive V3 Status of encoder interface [FD172.4] Index 1: Status encoder 1 SD1 - SD12 Index 2: Status encoder 2 SD1 - SD12	Dec.Plc.: 0 Unit: - Indices: 2 Type: O2	Menus: - Parameter menu + Communication + Field bus interfaces - Upread/free access
n925 G1_STW 2925	Parameter is only necessary for the parameter model of PROFIdrive V3 standard. Parameter is only visible if PROFIdrive V3 is set.	Dec.Plc.: 0 Unit: - Indices: - Type: V2	Menus: - Parameter menu + Communication + Field bus interfaces - Upread/free access
n926 G2_STW 2926	Parameter is only necessary for the parameter model of PROFIdrive V3 standard. Parameter is only visible if PROFIdrive V3 is set.	Dec.Plc.: 0 Unit: - Indices: - Type: V2	Menus: - Parameter menu + Communication + Field bus interfaces - Upread/free access
n927 G1_XIST2 2927	Parameter is only necessary for the parameter model of PROFIdrive V3 standard. Parameter is only visible if PROFIdrive V3 is set.	Dec.Plc.: 0 Unit: - Indices: - Type: X4	Menus: - Parameter menu + Communication + Field bus interfaces - Upread/free access
n928 G2_XIST2 2928	Parameter is only necessary for the parameter model of PROFIdrive V3 standard. Parameter is only visible if PROFIdrive V3 is set.	Dec.Plc.: 0 Unit: - Indices: - Type: X4	Menus: - Parameter menu - Upread/free access - Drive setting
n929 G1_STW 2929	Parameter is only necessary for the parameter model of PROFIdrive V3 standard. Parameter is only visible if PROFIdrive V3 is set.	Dec.Plc.: 0 Unit: - Indices: - Type: V2	Menus: - Parameter menu - Upread/free access
n930 G1_XIST1 2930	Parameter is only necessary for the parameter model of PROFIdrive V3 standard. Parameter is only visible if PROFIdrive V3 is set.	Dec.Plc.: 0 Unit: - Indices: - Type: X4	Menus: - Parameter menu - Upread/free access
n931 G2_STW 2931	Parameter is only necessary for the parameter model of PROFIdrive V3 standard. Parameter is only visible if PROFIdrive V3 is set.	Dec.Plc.: 0 Unit: - Indices: - Type: V2	Menus: - Parameter menu - Upread/free access
n932 G2_XIST1 2932	Parameter is only necessary for the parameter model of PROFIdrive V3 standard. Parameter is only visible if PROFIdrive V3 is set.	Dec.Plc.: 0 Unit: - Indices: - Type: X4	Menus: - Parameter menu - Upread/free access

Parameter	Description	Data	Read/write
U950* Sampling Times1 2950	Parameter for setting the sampling time of the functions with function numbers 1 to 100.	index1: 20 Min: 2 Max: 20 Unit: - Indices: 100 Type: O2	Menus: - Parameter menu + Releases - Upread/free access Changeable in: - Drive setting
U951* Sampling Times2 2951	Parameter for setting the sampling time of the functions with function numbers 101 to 200.	index1: 20 Min: 2 Max: 20 Unit: - Indices: 100 Type: O2	Menus: - Parameter menu + Releases - Upread/free access Changeable in: - Drive setting
U952* Sampling Times3 2952	Parameter for setting the sampling time of the function with function numbers 201 to 300.	index1: 20 Min: 2 Max: 20 Unit: - Indices: 100 Type: O2	Menus: - Parameter menu + Releases - Upread/free access Changeable in: - Drive setting
U953* Sampling Times4 2953	Parameter for setting the sampling time of the functions with function numbers 301 to 400.	index1: 20 Min: 1 Max: 20 Unit: - Indices: 72 Type: O2	Menus: - Parameter menu + Releases - Upread/free access Changeable in: - Drive setting
n957 Sampling Times 7 2957	Parameter for visualizing the sampling time of the internal functions with function numbers 701 ... 800	Dec.Plc.: 0 Unit: - Indices: 100 Type: O2	Menus: - Parameter menu + Releases - Upread/free access
n958 AutomaticRecord 2958	Parameter for visualization of the sampling time of internal functions with function numbers 801 ... 900	Dec.Plc.: 0 Unit: - Indices: 100 Type: O2	Menus: - Parameter menu + Releases - Upread/free access
n959 SamplingTimes9 2959	Parameter for visualization of the sampling time of internal functions with function numbers 901 ...1000	Dec.Plc.: 0 Unit: - Indices: 100 Type: O2	Menus: - Parameter menu + Releases - Upread/free access
U960* Func Sequence 2960	Parameterizing of the processing sequence for functions 1 to 100.	index1: 10 Min: 0 Max: 9999 Unit: - Indices: 100 Type: O2	Menus: - Parameter menu + Releases - Upread/free access Changeable in: - Drive setting
U961* Func Sequence 2961	Parameterizing of the processing sequence for functions 101 to 200.	index1: 1010 Min: 0 Max: 9999 Unit: - Indices: 100 Type: O2	Menus: - Parameter menu + Releases - Upread/free access Changeable in: - Drive setting
U962* Func Sequence 2962	Parameterizing of the processing sequence for functions 201 to 300.	index1: 2010 Min: 0 Max: 9999 Unit: - Indices: 100 Type: O2	Menus: - Parameter menu + Releases - Upread/free access Changeable in: - Drive setting
U963* Func Sequence 2963	Parameterizing of the processing sequence for functions 301 to 400.	index1: 3010 Min: 0 Max: 9999 Unit: - Indices: 72 Type: O2	Menus: - Parameter menu + Releases - Upread/free access Changeable in: - Drive setting

Parameter	Description	Data	Read/write
n967 Function Seq 7 2967	Parameter for visualizing the processing sequence of the internal functions with function numbers 701 ... 800	Dec.Plc.: 0 Unit: - Indices: 100 Type: O2	Menus: - Parameter menu + Releases - Upread/free access
n968 Function Seq 8 2968	Parameter for visualizing the processing sequence of the internal functions with function numbers 801 ... 900	Dec.Plc.: 0 Unit: - Indices: 100 Type: O2	Menus: - Parameter menu + Releases - Upread/free access
n969 Function Seq 9 2969	Parameter for visualizing the processing sequence of the internal functions with function number 901 .. 1000	Dec.Plc.: 0 Unit: - Indices: 100 Type: O2	Menus: - Parameter menu + Releases - Upread/free access
U976* FID 2976	Individual unit identification number, written during production of the unit (cannot be changed!)	index1: 0 Unit: - Indices: 2 Type: L2	Menus: - Parameter menu + Releases - Upread/free access - Power section definition Changeable in: - Power section definition
U977* PIN 2977	PIN = "Personal Identification Number". The technology functions of MASTERDRIVES MC are released by entering the correct (unit-specific) individual PIN.	index1: 0 Unit: - Indices: 2 Type: L2	Menus: - Parameter menu + Releases + Technology + Synchronism + Positioning - Board configuration - Upread/free access Changeable in: - Board configuration - Drive setting - Ready
n978 Tech Release 2978	Release of the technology functions 0 => Technology blocked 1 => Technology released 2 => Technology released for 500h	Dec.Plc.: 0 Unit: - Indices: - Type: O2	Menus: - Parameter menu + Releases + Technology + Synchronism + Positioning - Upread/free access
n979 PWE Checksum 2979	Checksum of the value of all setting parameters The following parameters are ignored: U720 to U769, U976, U977	Dec.Plc.: 0 Unit: - Indices: - Type: O4	Menus: - Parameter menu - Upread/free access
n980 Par # List pt11 2980		Dec.Plc.: 0 Unit: - Indices: 101 Type: O2	Menus: - Parameter menu - Upread/free access
n981 Par # List pt12 2981		Dec.Plc.: 0 Unit: - Indices: 101 Type: O2	Menus: - Parameter menu - Upread/free access
n982 Par # List pt13 2982		Dec.Plc.: 0 Unit: - Indices: 101 Type: O2	Menus: - Parameter menu - Upread/free access
n983 Par # List pt14 2983		Dec.Plc.: 0 Unit: - Indices: 101 Type: O2	Menus: - Parameter menu - Upread/free access

Parameter	Description	Data	Read/write
n984 Par # List pt15 2984		Dec.Plc.: 0 Unit: - Indices: 101 Type: O2	Menus: - Parameter menu - Upread/free access
n985 Par # List pt16 2985		Dec.Plc.: 0 Unit: - Indices: 101 Type: O2	Menus: - Parameter menu - Upread/free access
n986 Par # List pt17 2986		Dec.Plc.: 0 Unit: - Indices: 101 Type: O2	Menus: - Parameter menu - Upread/free access
n987 Par # List pt18 2987		Dec.Plc.: 0 Unit: - Indices: 101 Type: O2	Menus: - Parameter menu - Upread/free access
n988 Par # List pt19 2988		Dec.Plc.: 0 Unit: - Indices: 101 Type: O2	Menus: - Parameter menu - Upread/free access
n989 Par # List pt20 2989		Dec.Plc.: 0 Unit: - Indices: 101 Type: O2	Menus: - Parameter menu - Upread/free access
n990 Par # List chg4 2990		Dec.Plc.: 0 Unit: - Indices: 101 Type: O2	Menus: - Parameter menu - Upread/free access
n991 Par # List chg5 2991		Dec.Plc.: 0 Unit: - Indices: 101 Type: O2	Menus: - Parameter menu - Upread/free access
n992 Par # List chg6 2992		Dec.Plc.: 0 Unit: - Indices: 101 Type: O2	Menus: - Parameter menu - Upread/free access

Connector List

Connector list Motion Control

07.11.01

Connector number	Connector name	Description	DSP	Double word
K0000	FixConn 0%	Fixed connector 0 In function diagram: 15.4, 290.2	no	no
K0001	FixConn 100%	Fixed connector 100 % In function diagram: 15.4, 290.2	no	no
KK0002	FixConn 200%	Fixed connector 200 % In function diagram: 15.4, 290.2	no	yes
K0003	FixConn -100%	Fixed connector -100% In function diagram: 15.4, 290.2	no	no
KK0004	FixConn -200%	Fixed connector -200% In function diagram: 15.4, 290.2	no	yes
K0005	FixConn 50%	Fixed connector 50% In function diagram: 290.2	no	no
K0006	FixConn 150%	Fixed connector 150% In function diagram 290.2	no	no
K0007	FixConn -50%	Fixed connector -50% In function diagram 290.2	no	no
K0008	FixConn -150%	Fixed connector -150% In function diagram: 290.2	no	no
K0010	AnaIn NL Value	Analog input 1 non-linerized value In function diagram: 80.3	yes	no
K0011	AnaIn Setp	Analog input 1 normalized in function diagram: 80.7	yes	no
K0015	AnaOut ActV	Actual value analog output 1 (after smoothing, before scaling and offset) In function diagram: 80.3	no	no
K0022	I(Abs smooth)	Output current quantity (smoothed) in function diagram: 500.6	no	no
K0030	Control Word 1	Control word 1 in function diagram: 180.7	no	no
K0031	Control Word 2	Control word 2 (bits 16-31) in function diagram: 190.5	no	no
K0032	Status Word 1	Status word 1 in function diagram: 200.5	no	no
K0033	Status Word 2	Status word 2 (bits 16 to 31) in function diagram: 210.5	no	no
K0035	ActiveBICO DSet	Active BICO data set in function diagram: 20.5, 540.1	no	no
K0036	Active FuncDSet	Active function data set in function diagram: 20.5, 540.1	no	no
KK0040	Curr FixSetp	Connector with currently valid fixed setpoint (selectable by function data set and fixed setpoint bits) in function diagram: 290.6	no	yes
KK0041 ... KK0056	FixSetpoint	16 fixed setpoints of currently selected function data set in function diagram: 290.4	no	yes
KK0057	MOP (Input)	Input of motor-operated potentiometer in function diagram: 300.5	no	yes
KK0058	MOP (Output)	Output value of motor-operated potentiometer in function diagram: 300.8	no	yes

Connector number	Connector name	Description	DSP	Double word
KK0070	n(set, sum1)	Speed setpoint after summation point 1 In function diagram: 310.4	yes	yes
KK0071	n(set, spd sel)	Speed setpoint after summation point 2 In function diagram: 310.7	yes	yes
KK0072	n(set, RgenIn)	Speed setpoint at ramp-function generator input In function diagram: 320.2	yes	yes
KK0073	n(set, RgenOut)	Speed setpoint at ramp-function generator output In function diagram: 320.4	yes	yes
KK0074	n(set,sum2)	Speed setpoint at summation point 3 In function diagram: 320.6	yes	yes
KK0075	n(set,limitr)	Speed setpoint after limitation to n(max) in function diagram: 320.8	yes	yes
KK0076	dn/dt (RgenOut)	dn/dt at ramp-function generator output in function diagram: 320.5	yes	yes
K0077	Torque(PRE)	Pre-control torque (inertia compensation) in function diagram: 320.5	yes	no
KK0088	ZeroPtDevExtTot	Deviation of the position of the external encoder from the zero position as defined by the zero pulse If an external encoder is used for motor position measurement (P0182=104), the position-feedback scaling factor and the resolution of the motor encoder apply. Otherwise, the position-feedback scaling factor and the resolution of the external encoder are used. In function diagram: FP242	no	yes
KK0089	ZeroPtDev	Deviation of the actual position of the motor encoder freom the reference point (zero pulse) in increments. In function diagram: FP240	no	yes
KK0090	Mech. Angle	Mechanical angle in function diagrams: 230.6, 240.6, 250.7, 260.6, 500.3 The actual position variable KK0090 shows a mechanical rotor position without regarding the adjusted angle offset in P132.	yes	yes
KK0091	n(act)	Actual speed in function diagram: 500.5	yes	yes
KK0094	SBP SetpCh1	First output connector for the setpoint encoder normalized with P140.1 (P139=2xxx) or P141.1 (P139=1xxx). in function diagram: 256.8	no	yes
KK0095	SBP SetpCh2	Second output connector of setpoint encoder normalized with P140.2 (P139=2xxx) or P141.2 (P139=1xxx). in function diagram: 256.8	no	yes

Connector number	Connector name	Description	DSP	Double word
KK0096	Resolver Angle	Electrical resolver angle. In one mechanical revolution, the resolver angle makes a number of revolutions corresponding to its number of pole pairs. If the motor encoder is a multi-pole resolver and it is also to be used for referencing with a proximity switch and zero pulse, KK96 has to be connected up to position sensing (P182) instead of KK90. The multi-pole resolver supplies quasi Zp zero pulses per mechanical revolution. The number of pole pairs also has to be taken into account in the denominator of the IBF factor (P180.2) - see P109 or the Compendium - in order to compensate for the higher resolution of KK96.	yes	yes
KK0099	n.Mix	Speed resulting from the combination of KK91 and KK101 with the set ratio.The connector is calculated only when the motor encoder position or the external encoder position is connected to P244.	yes	yes
KK0100	PosAbs	Absolute position from the serial protocol in increments with multiturn encoder as motor encoder in function diagram: 260.6	no	yes
KK0101	n.ExtEncoder	Speed external encoder SBM2	yes	yes
KK0102	n.Difference	Speed difference KK91 - KK101. The connector is calculated only when the motor encoder position or the external encoder position is connected to P244.	yes	yes
KK0104	AngleEncExt	Mechanical angle machine encoder with SBM2 board. In function diagram: 242.6, 270.6 The connector KK104 will only be supported for external encoders with sine / cosine signals (sine/cosine encoder). The connector KK104 (mechanical angle external encoder on function diagrams 242 and 270) will only be supported for external encoders with incremental signals (sine/cosine encoder).	yes	yes
KK0105	PulseCntMachEn	Current status of pulse counter on machine encoder. This connector is the input for position detection of the machine encoder both for the SBM (multiturn) and the SBP (pulse encoder). In function diagram: 335.2	no	yes
KK0106	PositionAbsMach	Absolute position from the serial protocol in increments of the external machine encoder using a multiturn encoder	no	yes
K0115	DiagnostWord 1	Diagnostics word 1 for diagnostics system	yes	no

Connector number	Connector name	Description	DSP	Double word
K0116	DiagnostWord 2	Diagnostics word 2 for diagnostics system	yes	no
KK0120	Pos ActV	Position actual value of motor encoder in linear units In function diagram: 330.8	yes	yes
KK0121	Pos Test	Test output for position detection in function diagram: 330.7	yes	yes
KK0122	Pos (Memory)	Contents of measured value memory in function diagram: 330.7	yes	yes
KK0123	PosMVSOffset	Measured position value memory Motor encoder with position offset	yes	yes
KK0124	PosMeas RefP	Position measurement reference point detection P183.2 = xx1x pos. meas. ref. point detection active In function diagram [330.7]	yes	yes
KK0125	PosActV MEncod	Position actual value of machine encoder in linear units in function diagram: 335.8	no	yes
KK0126	MachEncPosTest	Test output for position sensing of machine encoder in function diagram: 335.7	no	yes
KK0127	MVal Mem MEncod	Position measured value of external encoder. in function diagram: 335.7	no	yes
KK0128	n(act) Mach	Speed measured via machine encoder. This corresponds to the differentiated value of connector 125 in its length unit per second. in function diagram: 335.7	no	yes
KK0129	n(act) % Mach	Speed measured via machine encoder in normalization 4000H = 100% = ref. machine speed in function diagram: 335.7	no	yes
KK0130	Pos (Deviation)	Setpoint/actual value deviation of position in increments in function diagram: 340.3	yes	yes
KK0131	PosReg (Outp)	Position controller output in function diagram: 340.8	yes	yes
KK0132	PosReg (P-port)	Position controller P component in function diagram: 340.5	yes	yes
KK0133	PosReg (I-port)	Position controller I component in function diagram: 340.5	yes	yes
KK0134	PosRegLimFix	The connector contains the fixed position controller limit defined in parameter 207. in function diagram: 340.4	yes	yes
KK0135	PosReg T Pre	Output of torque pre-control of position controller. in function diagram: 340.8	yes	yes
KK0141	PosFixVal 1	Position fixed values In function diagram: 325.4	yes	yes
KK0142	PosFixVal 2	Position fixed value 2 in function diagram: 325.4	yes	yes
KK0143	PosFixVal 3	Position fixed value 3 in function diagram: 325.4	yes	yes
KK0144	PosFixVal 4	Position fixed value 4 in function diagram: 325.4	yes	yes

Connector number	Connector name	Description	DSP	Double word
KK0145	FixSetpoint%1	%-fixed setpoint generated on the control processor (DSP). in function diagram: 325.4	yes	yes
KK0146	FixSetpoint%2	%-fixed setpoint generated on the control processor (DSP). in function diagram: 325.4	yes	yes
KK0147	FixSetpoint%1	%-fixed setpoint generated on the control processor (DSP). in function diagram: 325.4	yes	yes
KK0148	FixSetpoint%4	%-fixed setpoint generated on the control processor (DSP). in function diagram: 325.4	yes	yes
KK0150	n (set,smooth)	Smoothed speed setpoint prior to setpoint/actual value comparison of speed controller In function diagram: 360.4	yes	yes
KK0151	n(act,smooth)	Smoothed speed actual value prior to setpoint/actual value comparison of speed controller In function diagram: 360.4	yes	yes
KK0152	n(Deviation)	Setpoint/actual value deviation at speed controller input in function diagram: 360.5	yes	yes
K0153	M(set, n-Reg)	Speed controller output in function diagram: 360.8	yes	no
K0154	n-Reg (P-port)	P component of speed controller in function diagram: 360.8	yes	no
K0155	n-Reg (I-port)	I component of speed controller In function diagram: 360.8	yes	no
KK0157	n(Droop)	Speed difference from droop In function diagram: 360.3	yes	yes
KK0158	n(Band-Stop)	Speed actual value after filtering through band-stop in function diagram: 360.3	yes	yes
KK0159	n(DT1 Func)	Output of the DT1 function on speed controller in function diagram: 360.4	yes	yes
KK0160	n(DT1 Func)inv	Inverted output of DT1 function on DT1 function. In function diagram: 360.5	yes	yes
K0165	Torq(set,limit)	Output connector torque limitation In function diagram: 370.4	yes	no
K0166	Isq(set)	Setpoint torque forming current component after torque limitation and conversion of torque -> current In function diagram: 370.5	yes	no
K0167	Isq(set,limitr)	Setpoint torque forming current ccomponent after torque and current limitation in function diagram: 370.7	yes	no
K0168	Isq(set,active)	Setpoint torque forming current component from torque limitation to current controller In function diagram: 370.8, 390.3	yes	no
K0170	Torq(limit1,set	Output of fixed setpoint for Torq(limit,1) in function diagram: 370.1	yes	no

Connector number	Connector name	Description	DSP	Double word
K0171	Torq(limit2,set	Output of fixed setpoint for Torq(limit, 2) in function diagram: 370.1	yes	no
K0172	Torq(limit1,act	Upper torque limit of speed limitation controller in function diagram: 370.2	yes	no
K0173	Torq(limit2,act	Lower torque limit of speed limitation controller in function diagram: 370.2	yes	no
K0175	Imax(perm)	Currently valid value of maximum current in function diagram: 370.5	no	no
K0176	Isq(max, abs)	Amount of torque forming current component to which limitation takes place in current limitation. The maximum current and the magnetizing current are included in calculation. In function diagram: 370.6	yes	no
K0180	Psi(set)	Fixed setpoint for setpoint flux in function diagram: 390.1	yes	no
K0181	Psi(act)	Actual value of flux calculated from the flux model in function diagram: 390.7	yes	no
K0182	Isd(act)	Actual value of flux forming current component in function diagram: 390.4	yes	no
K0183	Isd(set,active)	Setpoint flux forming current (from flux controller) In function diagram: 390.4	yes	no
K0184	Isq(act)	Actual value of torque forming current component in function diagram: 390.4	yes	no
K0185	Isq(Deviation)	Deviation of torque forming current component. In function diagram: 390.7	yes	no
KK0186	Theta(I-Reg)	Angle of rotation for vector rotation of current control. In function diagram: 390.7	yes	yes
K0187	kT(ist)	Actual value of conversion factor torque <-> torque forming current	yes	no
K0188	n(slip)	Slip speed in function diagram: 390.7	yes	no
K0189	U(set,abs)	Setpoint voltage amount from current controller. Phase-to-phase voltage, rms value of the fundamental. The voltage applied to the motor is reduced by the valve voltage. In function diagram: 390.7	yes	no
KK0200	f(set,V/f)	Setpoint frequency v/f characteristic in function diagram: 400.5	yes	yes
KK0201	Theta (V/f)	Angle of rotation of v/f characteristic In function diagram: 400.6	yes	yes
K0202	FSetp AddBoost	Fixed setpoint for additional voltage boost on v/f characteristic. In function diagram: 400.2	no	no
K0203 Compact PLUS only	Boost	Voltage boost for v/f characteristic. in function diagram: 400.4	no	no
K0203 not Compact PLUS	Boost	Voltage boost for v/f characteristic. in function diagram: 400.4	no	no

Connector number	Connector name	Description	DSP	Double word
K0204	U(set,V/f)	Setpoint voltage for v/f characteristic in function diagram: 400.7	yes	no
K0205	A(set,V/f)	Setpoint modulation depth, v/f characteristic in function diagram: 400.8	yes	no
KK0206	n(set,V/f)	Setpoint speed v/f characteristic. in function diagram: 400.2	yes	yes
KK0207	f(set,V/f) 1	Reference frequency v/f characteristic before intervention of I(max) controller. in function diagram: 400.3	yes	yes
K0208	I max-Reg.(Out)	Output I(max) controller for v/f characteristic. in function diagram: 400.3	yes	no
K0222	ModDepth (abs)	Amount of modulation depth in function diagram: 390.8, 420.7	yes	no
K0223	Switch-on Time1	Switch-on time 1 in function diagram: 420.6	yes	no
K0224	Switch-on Time2	Switch-on time 2 in function diagram: 420.6	yes	no
K0225	Switch-on Time3	Switch-on time 3 in function diagram: 420.6	yes	no
K0226	Usd(stp,smooth)	For module test: voltage setpoint d-component smoothed for display	yes	no
K0237	Usq(stp,smooth)	For module test: voltage setpoint d-component smoothed for display	yes	no
K0240	DC BusVolts act	DC link voltage in function diagram: 500.8	no	no
K0241	Torque(act)	Torque actual value In function diagram 360.2	yes	no
K0242	OutputAmps(rms9	Fundamental frequenc rms value of the output current in function diagram: 500.7, 491.2	no	no
K0245	MotTemp	Motor temperature with connected KTY sensor Normalization: 256°C = 4000Hex in function diagram: 491.4	no	no
K0246	Drive Utiliz	Drive utilization (output of the i2t calculation). in function diagram: 490.3	no	no
K0248	CalcTimeHdroom	Free calculating time. In function diagram: 490.7	no	no
K0249	Drive Status	Current converter status In function diagram: 20.3, 520.8	no	no
K0250	Flt/Warn #	Connector for current alarm number and current fault number. Upper byte: fault number Lower byte: alarm number. The value 0 means that no alarm or fault is present. Attention: The alarm number and the fault number are not updated at the same time as the fault or warning bit in the status word; they are staggered a few sampling periods. In function diagram: 510.3	no	no

Connector number	Connector name	Description	DSP	Double word
K0251 Compact PLUS only	Short-Time I2t	This connector provides information on the status of the short-time I2t monitoring. This monitoring is always active whenever the current quantity exceeds 1.6 times the converter rated current (I_Conv_Rated). The integrator does not return until the current quantity falls below 0.9 I_Conv_Rated. If the connector achieves the value 100%, the current limit (r129) is reduced to 0.9 I_Conv_Rated. in function diagram: 490.3	no	no
K0255	LZSendValue	Connector output of sign-of-life counter transmit block. Value range: 1..15 In function diagram [170.4]	no	no
K0256	LZ.Send Slave	Connector output of slave sign-of-life counter transmit block Value range: 1..15 In function diagram [170.6]	no	no
K0257	SoL.Rec.ActErr	Connector for output of the current error value of the LC receiver block. If a sign of life is omitted, the LC receiver block is incremented by 10. If a valid sign of life is received, the LC receiver block is decremented by 1. Function diagram 170	no	no
K0258	SoL.Rec.	Connector for output of the number of times that the sign of life has been omitted since power up. This omission counter is reset only when the power supply for the electronics (24V) is switched on. In function diagram 170	no	no
K0260	SYNC TimeCount	This connector contains the internal time slot counter which counts in T0 increments. Unit: 1 = T0 = 1/pulse frequency = 1/P340 This connector is only processed with the SIMOLINK dispatcher, otherwise it is always 0. It is used for transferring time slot information from the dispatcher to the transceivers so that time slots can be synchronized above the SIMOLINK bus cycle clock.	no	no
KK0301	PosCorr'nVal p	Value with which actual value has to be corrected, e.g. on round axis in function diagram: 815.5, 836.6	no	yes
KK0302	PosSetVal P	Value at which the actual value has to be absolutely set e.g. during deleting or ref. traversing. in function diagram: 815.5	no	yes
KK0303	PosOffset P	Value by which the actual value has to be shifted e.g. during tool correction or zero shift. in function diagram: 815.5	no	yes
KK0306	PosCorrValExt	Position correction value external encoder	no	yes

Connector number	Connector name	Description	DSP	Double word
KK0308	Corr'n MasterV	The absolute master-value is used with the master-value correction function during homing to compensate for the actual-value jump. To this end, this connector can be connected to "Correction displacement" U453, and "Trigger master-value correction" B828 can be connected to binector U452.1. Function diagram: 817 (845)	no	yes
KK0310	Pos Setp P	Digital setpoint position in function diagram: 817.6, 836.8	no	yes
K0311	V-SetpContr P	Speed setpoint for the operating mode "Controlling the position controller" in function diagram: 817.6	no	no
KK0312	Speed Pre P	Calculated speed setpoint for pre-control of the position controller in function diagram: 817.6, 836.8	no	yes
KK0313	Accel Pre P	Calculated acceleration setpoint for pre-control of the speed controller in function diagram: 817.6	no	yes
KK0315	Checkback P	Status of checkback bits (PEH / fault / torque change etc.) in function diagram: 811.7	no	yes
K0401	FIXSETP K U001	FB: 1st fixed setpoint 16-bit In function diagram: 705.2	no	no
K0402	FIXSETP K U002	FB 2nd fixed setpoint 16-bit in function diagram: 705.2	no	no
K0403	FIXSETP K U003	FB. 3rd fixed setpoint 16-bit in function diagram: 705.2	no	no
K0404	FIXSETP K U004	FB: 4th fixed setpoint 16-bit in function diagram: 705.2	no	no
K0405	FIXSETP K U005	FB: 5th fixed setpoint 16-bit in function diagram: 705.2	no	no
K0406	FIXSETP K U006	FB: 6th fixed setpoint 16-bit in function diagram: 705.2	no	no
K0407	FIXSETP K U007	FB: 7th fixed setpoint 16-bit in function diagram: 705.2	no	no
K0408	FIXSETP K U008	FB: 8th fixed setpoint 16-bit in function diagram: 705.2	no	no
K0409	FIXSETP K U009	FB: 9th fixed sestpoint 16-bit (unsigned). in function diagram: 705.2	no	no
KK0411	FIXSETP KK U011	FB: 1st fixed setpoint 32-bit. in function diagram: 705.3	no	yes
KK0412	FIXSETP KK U012	FB: 2nd fixed setpoint 32-bit in function diagram: 705.3	no	yes
KK0413	FIXSETP KK U013	FB: 3rd fixed setpoint 32-bit in function diagram: 705.3	no	yes
KK0414	FIXSETP KK U014	FB: 4th fixed setpoint 32-bit in function diagram: 705.3	no	yes
KK0415	FIXSETP KK U015	FB: 5th fixed setpoint 32-bit in function diagram: 705.3	no	yes
KK0416	FIXSETP KK U016	FB: 6th fixed setpoint 32-bit in function diagram: 705.3	no	yes
KK0417	FIXSETP KK U017	FB: 7th fixed setpoint 32-bit in function diagram: 705.3	no	yes

Connector number	Connector name	Description	DSP	Double word
KK0418	FIXSETP KK U018	FB: 8th fixed setpoint 32-bit in function diagramm: 705.3	no	yes
KK0420 ... KK0422	K-> KK CONV	3 outputs of the K -> KK converter in function diagram: 710.7	no	yes
K0423 ... K0428	KK-> K CONV	6 outputs of the KK -> K converter. in function diagram: 710.7	no	no
K0431	B ® K CONV U076	Output of the 1st binector -> connector. in function diagram: 720.4	no	no
K0432	B ® K CONV U078	Output of the 2nd binector -> connector. in function diagram 720.4	no	no
K0433	B ® K CONV U080	Output of the 3rd binector -> connector in function diagram: 720.8	no	no
K0434 ... K0441	AdrCon	Service connectors, only for Siemens service personnel	no	no
K0442	ADD K 0.83	Output of the 1st 16-bit adder. in function diagram: 725.2	no	no
K0443	ADD K 1.01	Output of the 2nd 16-bit adder in function diagram: 725.2	no	no
K0444	ADD K 1.42	Output of the 3rd 16-bit adder in function diagram: 725.3	no	no
K0445	ADD K 2.20	Output of the 4th 16-bit adder. in function diagram: 725.3	no	no
K0446	ADD 4K 1.57	Output of the 16t-bit adder with 4 inputs. in function diagram: 725.5	no	no
K0447	SUB K 1.02	Output of the 1st 16-bit subtracter. in function diagram: 725.2	no	no
K0448	SUB K 1.58	Output of the 2nd 16-bit subtracter in function diagram: 725.2	no	no
K0449	SUB K 2.06	Output of the 3rd 16-bit subtracter in function diagram: 725.3	no	no
KK0450	ADD KK 1.15	Output of the 1st 32-bit adder. in function diagram: 725.2	no	yes
KK0451	ADD KK 1.29	Output of the 2nd 32-bit adder in function diagram: 725.2	no	yes
KK0452	ADD KK 2.05	Output of the 3rd 32-bit adder in function diagram: 725.3	no	yes
KK0453	ADD KK 2.21	Output of the 4th 32-bit adder in function diagram: 725.3	no	yes
KK0454	SUB KK 1.16	Output of the 1st 32-bit subtracter. in function diagram: 725.2	no	yes
KK0455	SUB KK 2.35	Output of the 2nd 32-bit subtracter in function diagram: 725.2	no	yes
K0456	MOD ADD K 1.72	Output of the 16-bit adder modulo. in function diagram: 725.8	no	no
KK0457	MOD ADD KK 1.91	Output of the 32-bit adder modulo in function diagram: 725.8	no	yes
K0458	VZ INV K 0.84	Output of the 1st 16-bit inverter. in function diagram: 725.5	no	no
K0459	VZ INV K 1.17	Output of the 2nd 16-bit inverter in function diagram: 725.5	no	no
K0460	VZ INV K 2.36	Output of the 3rd 16-bit inverter in function diagram: 725.5	no	no

Connector number	Connector name	Description	DSP	Double word
KK0461	VZ INV KK 1.03	Output of the 1st 32-bit inverter. in function diagram: 725.5	no	yes
KK0462	VZ INV KK 2.22	Output of the 2nd 32-bit inverter in function daigram: 725.5	no	yes
K0463	SVZ INV K 1.30	Output of the 16-bit switchable inverter in function diagram: 725.8	no	no
K0464	Wait Time 2.57K	Number of loop cycles (calc. time approx. 1µs) of time slot wait block	no	no
KK0465	SVZ INV KK 1.90	Output of the 32-bit switchable inverter. in function diagram: 725.8	no	yes
K0467	MUL K 1.04	Output of the 1st 16-bit multiplier in function diagram: 730.2	no	no
K0468	MUL K 1.59	Output of the 2nd 16-bit multiplier in function diagram: 730.2	no	no
K0469	MUL K 2.37	Output of the 3rd 16-bit multiplier in function diagram: 730.2	no	no
KK0470	MUL KK 1.31	Output of the 32-bit multiplier in function diagram: 730.2	no	yes
K0471	DIV K 1.05	Output of the 1st 16-bit divider in function diagram: 730.4	no	no
K0472	DIV K 2.23	Output of the 2nd 16-bit divider in function diagram: 730.4	no	no
KK0473	DIV KK 1.43	Output of the 1st 32-bit divider in function diagram: 730.4	no	yes
KK0474 ... KK0478	ConnToPar Value	Return value for connector-to-parameter converter in function diagram: 798.8	no	yes
K0479	ConnToPar ParNo	First parameter number for connector-to-parameter conversion. The connector supplies internally all possible parameter numbers if the respective index is softwired and externally only the parameter number of the first index is shown. In function diagram: 798.3	no	no
K0480	ConnToPar Index	First index number for connector-to-parameter conversion. The connector supplies internally all possible index numbers if the respective index is softwired and externally only the index number of the first index is shown. In function diagram 798.3	no	no
K0481	MULDIV K 1.06	Output of the 1st 16-bit multiplier/divider in function diagram: 730.8	no	no
KK0482	MULDIV KK 1.06	Output of the 1st multiplier/divider (32-bit intermediate result) in function diagram: 730.8	no	yes
K0483	MULDIV K 1.32	Output of the 2nd 16-bit multiplier/divider in function diagram: 730.8	no	no
KK0484	MULDIV KK 1.32	Output of the 2nd multiplier/divider (32-bit intermediate result) in function diagram: 730.8	no	yes
K0485	MULDIV K 1.73	Output of the 3rd 16-bit multiplier/divider in function diagram: 730.8	no	no

Connector number	Connector name	Description	DSP	Double word
KK0486	MULDIV KK 1.73	Output of the 3rd multiplier/divider (32-bit intermediate result) in function diagram: 730.8	no	yes
K0490	B->K CONV U057	Output of 4th binector -> connector converter Function diagram: 720.8	no	no
K0491	ABSVGEN K 0.75	Output of the 1st 16-bit absolute-value generator in function daigram: 735.3	no	no
K0492	ABSVGEN K 2,47	Output of the 2nd 16-bit absolute-value generator in function diagram: 735.3	no	no
K0493	ABSVGEN K 2.67	Output of the 3rd 16-bit absolute-value generator in function diagram: 735.3	no	no
KK0494	ABSVGEN KK 2.07	Output of the 1st 32-bit absolute-value generator in function diagram: 735.3	no	yes
K0501 ... K0503	LIMITR K 1.74	1st 16-bit limiter in function diagram: 735.7	no	no
K0504 ... K0506	LIMITR K 2.38	2nd 16-bit limiter in function diagram: 735.7	no	no
KK0507 ... KK0509	LIMITR KK 2.48	1st 32-bit limiter in function diagram: 735.7	no	yes
K0511 ... K0512	LMTMON K 1.18	1st limit-value monitor, 16-bit: fixed setpoint and output, smooothing element in function diagram: 740.2	no	no
K0513 ... K0514	LMTMON K 2.49	2nd limit-value monitor, 16-bit: fixed setpoint and output, smoothing element in function diagram: 740.2	no	no
KK0515 ... KK0516	LMTMON KK 2.68	3rd limit-value monitor, 32-bit: fixed setpoint and output, smoothing element in function diagram: 740.6	no	yes
KK0517	LMTMON KK 1.75	4th limit-value monitor, 32-bit: fixed setpoint in function diagram: 740.6	no	yes
K0521	SWITCH K 0.85	1st 16-bit analog switch in function diagram: 750.2	no	no
K0522	SWITCH K 1.19	2nd 16-bit analog switch in function diagram: 750.2	no	no
K0523	SWITCH K 1.21	3rd 16-bit analog switch in function diagram: 750.2	no	no
K0524	SWITCH K 1.60	4th 16-bit analog switch in function diagram: 750.4	no	no
K0525	SWITCH K 1.76	5th 16-bit analog switch in function diagram: 750.4	no	no
KK0526	SWITCH KK 0.86	1st 32-bit analog switch in function diagram: 750.2	no	yes
KK0527	SWITCH KK 0.87	2nd 32-bit analog switch in function diagram: 750.2	no	yes
KK0528	SWITCH KK 1.20	3rd 32-bit analog switch in function diagram: 750.2	no	yes
KK0529	SWITCH KK 1.77	4th 32-bit analog switch in function diagram: 750.4	no	yes

Connector number	Connector name	Description	DSP	Double word
KK0530	SWITCH KK 2.08	5th 32-bit analog switch in function diagram: 750.4	no	yes
KK0531 ... KK0538	DEMUX KK 0.62	8 outputs of the 32-bit 8-fold demultiplexer in function diagram: 750.7	no	yes
KK0539	OutpMultiplex 1	Output of the 32-bit 8-fold multiplexer In function diagram: 750.7	no	yes
K0541	CURVE K 1.07	1st 16-bit characteristic curve in function diagram: 755.3	no	no
K0542	CURVE K 1.33	2nd 16-bit characteristic curve in function diagram: 755.5	no	no
K0543	CURVE K 2.09	3rd 16-bit characteristic curve in function diagram: 755.8	no	no
K0544	DEADZONE K 0.88	Dead zone output 1 in function diagram: 755.5	no	no
KK0545	MAX KK 2.24	Output maximum selection 32-bit in function diagram: 760.2	no	yes
KK0546	MIN KK 2.25	Output minimum selection 32-bit in function diagram: 760.2	no	yes
KK0547	OutpMultiplex 2	Output of the second 8-fold multiplexer In function diagram: 753	no	yes
KK0548	OutpMultiplex 3	Output of the third 8-fold multiplexer In function diagram: 753	no	yes
KK0549	OutpMultiplex 4	Output of the fourth 8-fold multiplexer In function diagram: 753	no	yes
KK0551	TRA/STOR KK 0.7	1st 32-bit tracking/storage element in function diagram: 760.5	no	yes
KK0552	TRA/STOR KK 2.6	2nd 32-bit tracking/storage element in function diagram: 760.8	no	yes
KK0553	STORE KK 0.77	1st 32-bit analog memory in function diagram: 760.5	no	yes
KK0554	STORE KK 2.50	2nd 32-bit analog memory in function diagram: 760.8	no	yes
K0561	COUNT MIN K U31	Fixed setpoint minimum 16-bit counter in function diagram: 785.2	no	no
K0562	COUNT MAX K U31	Fixed setpoint maximum 16-bit counter in function diagram: 785.2	no	no
K0563	COUNT SET K U31	Fixed setpoint setting value 16-bit counter in function diagram: 785.2	no	no
K0564	COUNT STA K U31	Fixed setpoint starting value 16-bit counter in function diagram: 785.2	no	no
K0565	COUNTER K 1.38	Output of the 16-bit counter in function diagram: 785.7	no	no
KK0570	ComfRGen Input	Input of the comfort ramp-function generator in function diagram: 790.3	no	yes
KK0571	ComfRGen Output	Output of the comfort ramp-function generator in function diagram: 790.8	no	yes
KK0572	ComfRGen dy/dt	dy/dt of the comfort ramp-function generator in function diagram: 790.8	no	yes
KK0573	ComfRGen PosDir	Upper limit value of the comfort ramp-function generator In function diagram: 790.7	no	yes

Connector number	Connector name	Description	DSP	Double word
KK0574	ComfRGen NegDir	Lower limit value of the comfort ramp-function generator. In function diagram: 790.7	no	yes
K0577	SimpRGen Output	Output of the simple ramp-function generator in function diagram: 791.5	no	no
K0580	TeCntr Set/ActV	Setpoint/actual value deviation of the technology controller with controller type "PID controller". With controller type "PI controller with D portion in the actual value channel", the negated actual value is displayed. in function diagram: 792.3	no	no
K0581	TeCntr Input	Input of the technology controller in function diagram: 792.5	no	no
K0582	TeCntr D-Comp	D component of the technology controller in function diagram: 792.4	no	no
K0583	TeCntr P-Comp	P component of the technology controller in function diagram: 792.6	no	no
K0584	TeCntr I-Comp	I component of the technology controller in function diagram: 792.6	no	no
K0585	TeCntr CntrOut	Technology controller output before output limitation in function diagram: 792.6	no	no
K0586	TeCntr UpperLim	Fixed setpoint for the upper limitation of the technology controller in function diagram: 792.4	no	no
K0587	TeCntr LowerLim	Inverted value of the upper limitation of the technology controller in function diagram: 792.4	no	no
K0588	TeCntr Output	Output of the technology controller after output limitation in function diagram: 792.8	no	no
K0590	WobbleSignal	Output signal of wobble generator in function diagram: 795.8	no	no
K0591	Setp, Wobbled	Wobbled setpoint in function diagram: 795.8	no	no
KK0592 ... KK0599	TraceValueOutp	Output connector for the trace values in function diagram: 797.6	no	yes
KK0600	AnaDelayEl 1 KK	Analog output value of the 1st analog delay element in function diagram: 734.6	no	yes
KK0601	AnaDelayEl 2 KK	Analog output value of the 2nd analog delay element in function diagram: 734.8	no	yes
KK0602	MulDiv KK 1.12	32-bit result of the 1st high-resolution multiplier/divider in function diagram: 732.2	no	yes
KK0603	I32 KK 1.53	32-bit output value of the 1st integrator in function diagram: 734.4	no	yes
KK0604	I32 KK 1.85	32-bit output value of the 2nd integrator in function diagram: 734.8	no	yes
KK0605	PT1GI KK 2.31	32-bit output value of the 1st PT1 element in function diagram: 734.6	no	yes

Connector number	Connector name	Description	DSP	Double word
KK0606	PT1Gl KK 2.43	32-bit output value of the 2nd PT1 element in function diagram: 734.8	no	yes
KK0607	D Elem KK 2.32	32-bit output of the 1st D element in function diagram: 734.3	no	yes
KK0608	RealMaster KK	32-bit output value of the 1st real master in function diagram: 833.8	no	yes
KK0609	RealMaster T KK	32-bit output value of the 1st real master without restriction to the axis cycle length in function diagram: 833.6	no	yes
KK0610	VM Integr KK	32-bit output value of the 1st integrator - virtual master axis in function diagram: 791.6	no	yes
K0611	Integr32_1 Ti	16-bit fixed connector output for integral-time constant of the 1st 32-bit integrator. In function diagram: 734.2	no	no
K0612	Integr32_2 Ti	16-bit fixed connector output for integral-time constant of the 2nd 32-bit integrator. In function diagram: 734.6	no	no
K0613	PulseGen_1 Tp	16-bit fixed connector output for period off the 1st pulse generator in function diagram: 782.2	no	no
KK0614	RealMaster D KK	32-bit corection value for restricting the input value to the axis cycle in function diagram: 833.3	no	yes
K0615	T(Fric)	Frictional torque, output of the friction characteristic. In function diagram: 398.8	yes	no
KK0616	PAmpl.32_1 KK	32-bit result of the 1st P amplifier/multiplier (2-word) in function diagram: 732.2	no	yes
KK0617	PAmpf.32_2 KK	32-bit result of the 2nd P amplifier/multiplier (2-word) in function diagram: 732.2	no	yes
KK0618	Shift32_1 KK	32-bit result of the 1st shift multiplier/divider in function diagram: 732.5	no	yes
KK0619	Shift32_2 KK	32-bit result of the 2nd shift multiplier/divider in function diagram: 732.5	no	yes
KK0620	Shift32_3 KK	32-bit result of the 3rd shift multiplier/divider in function diagram: 732.8	no	yes
KK0621	Shift32_4 KK	32-bit result of the 4th shift multiplier/divider in function diagram: 732.8	no	yes
K0622	T(Accel)	Output connector of the torque pre-control (acceleration torque). In function diagram: 398.6	yes	no
K0623	T(Total)	Output of the torque addition block. In function diagram: 398.8	yes	no
KK0624	V RealMaster KK	32-bit output value of the 1st RealMaster [%] in function diagram: 833.8	no	yes

Connector number	Connector name	Description	DSP	Double word
KK0625	Revs/OvrldEncod	The output connector of the function block "starting position motor encoder" contains the overflow and revolultion counters for onward connection to the tracking storage elements.	no	yes
KK0627	LTrackMotEncod	Spare connector for the free block "start position motor encoder" [FD327]	no	yes
KK0628	Revs/OvflExEnco	The output connector of the function block "start position motor encoder" contains the overflow and revolution counters for onward connection to the correction memory elements.	no	yes
KK0629	LTrackExtEncod	Spare connector for the free block "start position external encoder" [FD333]	no	yes
K0630	Noise Output	Binary noise signal: PRBS (Pseudo Random Binary Sequence)	no	no
KK0640 ... KK0643	SH 1.68 KK	Double word connectors of first S&H board	no	yes
K0644 ... K0651	SH 1.68 K	Connectors of first S&H element	no	no
KK0652 ... KK0655	SH 1.69 KK	Double word connectors of second S&H board	no	yes
K0656 ... K0663	SH 1.69 K	Connectors of second S&H element	no	no
KK0664 ... KK0667	SH 1.70 KK	Double word connectors of third S&H board	no	yes
K0668 ... K0675	SH 1.70 K	Connectors of third S&H element	no	no
KK0801	Catch-up Stop	Fixed connector of parameter U688.1 shutdown position in function diagram: 837.1	no	yes
KK0802	Catch-up SetpSp	Fixed connector of catch-up setpoint speed U688.2 in function diagram: 837.1	no	yes
K0804	Gear Numerator	Connector reserved for input of a counter of a fixed gear factor for the sync. operation block in function diagram: 835.2	no	no
K0805	Gear Denomin	Connector reserved for input of a counter of a fixed gear factor for the sync. operation block in function diagram: 835.2	no	no
K0806	Scale X Numer	Fixed connector for numerator scaling x-axis of U623.1 in function diagram: 839.1	no	no
K0807	Scale X Denomin	Fixed connector for denominator scaling x-axis U623.2 in function diagram: 839.1	no	no
K0808	Scale Y Numer	Fixed scaling, Y-axis table, denominator in function diagram: 839.6	no	no
K0809	Scale Y Denomin	Fixed scaling, Y-axis table, denominator in function diagram: 839.6	no	no

Connector number	Connector name	Description	DSP	Double word
KK0810	Status_Table1	Bit 0 to 15: Number of support values (up to last fault-free support value) Bit 16 to 23: Fault code Bit 24: Table reset running Bit 25: Table transfer running Bit 26 to Bit 29: Spare Bit 30: Group fault Bit 31: Transfer finished and fault-free Fault code 0: No fault 1: Number of support values = 0 or higher maximum number of support points 2: Position value of master axis higher than table width 3: Position value of master axis not rising 4: Data block not present (M7) 5: Data block too short (M7) Last correct support point number in the event that an error has occurred during transfer to the table. The next support point is therefore the faulty support point. See fault code. In function diagram: 839.2	no	yes
KK0811	Status_Table2	Bit 0 to 15: Number of support values (up to last fault-free support value) Bit 16 to 23: Fault code Bit 24: Table reset running Bit 25: Table transfer running Bit 26 to Bit 29: Spare Bit 30: Group fault Bit 31: Transfer finished and fault-free Fault code 0: No fault 1: Number of support values = 0 or higher maximum number of support points 2: Position value of master axis higher than table width 3: Position value of master axis not rising 4: Data block not present (M7) 5: Data block too short (M7) Last correct support point number in the event that an error has occurred during transfer to the table. The next support point is therefore the faulty support point. See fault code. In function diagram: 839.2	no	yes
KK0812	DisplaceAngle	Source for the current angle of displacement [LU] in function diagram: 841.7	no	yes
KK0813	Displ Abs	Fixed connector for setting the absolute displacement angle. As standard, it acts upon the input connector U678 U677 -> KK813 -> U678 in function diagram: 841.2	no	yes

Connector number	Connector name	Description	DSP	Double word
KK0814	Displ Relative	Relative displacement angle. Fixed connector of U677.02 in function diagram: 841.2	no	yes
KK0815	V IN Virt	Speed setpoint of the virtual master axis in function diagram: 832.4	no	yes
KK0816	V_Virt_Master	Speed setpoint of the virtual master axis in function diagram: 832.8	no	yes
KK0817	PosSetp VMAxis	Position setpoint of the virtual master axis in function diagram: 832.8	no	yes
KK0818	V.SetpVirMast	Speed setpoint for virtual master axis in function diagram: 832.1	no	yes
KK0819	SetV VirtMast	Fixed value for the set value virtual master axis in function diagram: 832.5	no	yes
KK0820	V.VirtMast%	Speed output of the virtual master axis in % in function diagram: 832.8	no	yes
KK0822	TG_FK_ClutchPos	Fixed setpoint for offset coupling position in function diagram: 834.2	no	yes
KK0823	SetVal Table	Fixed connector for set value table U622 in function diagram: 839.4	no	yes
KK0824	X-Pos Table	Table position of the x-axis can be read out here. x-axis = master position. in function diagram: 839.3	no	yes
KK0825	Y-Pos Table	Table position of the y-axis can be read out here. y-axis = slave position	no	yes
KK0826	Corr'n Value	Position correction value in function diagram: 843.2	no	yes
KK0827	RestVal Offs		no	yes
KK0828	KKSyncCorrVal	Correction value [LU] of synchronizing difference (deviation of master/slave position)	no	yes
KK0829	ActSpeedDisplac	Contains the current speed in percent related to the positioning speed (U697.2)	no	yes
KK0830	MastVal FN335	Fixed connector 0 In function diagram: 15.4, 290.2	no	yes
KK0831	KK MV Corr Rest	Remaining distance [LU] of master value correction out of master value correction/master value offset	no	yes
KK0832	DisplaceAngle	Output of the additives Relative displacement angle setting [%] 32 bit	no	yes
KK0833	ResidPath	Residual path of the additives Relative displacement angle setting [LU] 32 bit	no	yes
KK0834	DisplaceAngle	Current value of the additives Relative displacement angle setting [LU] 32 bit	no	yes
KK0835	DisplaceSum	Output of the additive offset angle setting relative [LU] 32 Bit	no	yes

Connector number	Connector name	Description	DSP	Double word
KK0836	FB_DisplActVal	Output of the offset adder with limitation to ACL [LU] 32 bit [FD794a]	no	yes
KK0837	KK ActSpeed	Contains the current speed in percent referred to nominal speed "master value 1" [FD845]	no	yes
KK0838	KK CorrSpeed	Contains the current speed in percent referred to nominal speed "master value 1" [FD845]	no	yes
KK0839	ActSpeedPosC	Contains the current speed in percent referred to compensation speed	no	yes
KK0840	Status Table 3	Bit 0 to 15: Number of support values (up to last fault-free support value) Bit 16 to 23: Fault code Bit 24: Table reset running Bit 25: Table transfer running Bit 26 to Bit 29: Spare Bit 30: Group fault Bit 31: Transfer finished and fault-free Fault code 0: No fault 1: Number of support values = 0 or higher maximum number of support points 2: Position value of master axis higher than table width 3: Position value of master axis not rising 4: Data block not present (M7) 5: Data block too short (M7) Last correct support point number in the event that an error has occurred during transfer to the table. The next support point is therefore the faulty support point. See fault code. In function diagramm: 839c.2	no	yes

Connector number	Connector name	Description	DSP	Double word
KK0841	Status Table 4	Bit 0 to 15: Number of support values (up to last fault-free support value) Bit 16 to 23: Fault code Bit 24: Table reset running Bit 25: Table transfer running Bit 26 to Bit 29: Spare Bit 30: Group fault Bit 31: Transfer finished and fault-free Fault code 0: No fault 1: Number of support values = 0 or higher maximum number of support points 2: Position value of master axis higher than table width 3: Position value of master axis not rising 4: Data block not present (M7) 5: Data block too short (M7) Last correct support point number in the event that an error has occurred during transfer to the table. The next support point is therefore the faulty support point. See fault code. In function diagramm: 839c.2, 839d.2, 839e.2	no	yes
KK0842	Status Table 5	Bit 0 to 15: Number of support values (up to last fault-free support value) Bit 16 to 23: Fault code Bit 24: Table reset running Bit 25: Table transfer running Bit 26 to Bit 29: Spare Bit 30: Group fault Bit 31: Transfer finished and fault-free Fault code 0: No fault 1: Number of support values = 0 or higher maximum number of support points 2: Position value of master axis higher than table width 3: Position value of master axis not rising 4: Data block not present (M7) 5: Data block too short (M7) Last correct support point number in the event that an error has occurred during transfer to the table. The next support point is therefore the faulty support point. See fault code. In function diagramm: 839d.2, 839e.2	no	yes

Connector number	Connector name	Description	DSP	Double word
KK0843	Status Table 6	Bit 0 to 15: Number of support values (up to last fault-free support value) Bit 16 to 23: Fault code Bit 24: Table reset running Bit 25: Table transfer running Bit 26 to Bit 29: Spare Bit 30: Group fault Bit 31: Transfer finished and fault-free Fault code 0: No fault 1: Number of support values = 0 or higher maximum number of support points 2: Position value of master axis higher than table width 3: Position value of master axis not rising 4: Data block not present (M7) 5: Data block too short (M7) Last correct support point number in the event that an error has occurred during transfer to the table. The next support point is therefore the faulty support point. See fault code. In function diagramm: 839d.2, 839e.2	no	yes
KK0844	Status Table 7	Bit 0 to 15: Number of support values (up to last fault-free support value) Bit 16 to 23: Fault code Bit 24: Table reset running Bit 25: Table transfer running Bit 26 to Bit 29: Spare Bit 30: Group fault Bit 31: Transfer finished and fault-free Fault code 0: No fault 1: Number of support values = 0 or higher maximum number of support points 2: Position value of master axis higher than table width 3: Position value of master axis not rising 4: Data block not present (M7) 5: Data block too short (M7) Last correct support point number in the event that an error has occurred during transfer to the table. The next support point is therefore the faulty support point. See fault code. In function diagramm: 839d.2, 839e.2	no	yes

Connector number	Connector name	Description	DSP	Double word
KK0845	Status Table 8	Bit 0 to 15: Number of support values (up to last fault-free support value) Bit 16 to 23: Fault code Bit 24: Table reset running Bit 25: Table transfer running Bit 26 to Bit 29: Spare Bit 30: Group fault Bit 31: Transfer finished and fault-free Fault code 0: No fault 1: Number of support values = 0 or higher maximum number of support points 2: Position value of master axis higher than table width 3: Position value of master axis not rising 4: Data block not present (M7) 5: Data block too short (M7) Last correct support point number in the event that an error has occurred during transfer to the table. The next support point is therefore the faulty support point. See fault code. In function diagramm: 839d.2, 839e.2	no	yes
KK0846	ExpolPosSetpt	Position setpoint output of the extrapolator. In function diagram: 171	no	yes
KK0847	ExpolSpeed	Extrapolator speed setpoint output. In function diagram: 171	no	yes
KK0848	SLE Setpoint	Simolink encoder setpoint output Preferably wired to Simolinkwort 0 (P0751.1,.2). In function diagram: 793.6	no	yes
K0849	SLE ActVal	Simolink encoder actual value output. In function diagram: 793.6	no	no
KK0850	SLE Setpt32Bit	Setpoint SLE [LU] Axis cycle setpoint compensated from source SLE setpoint (U803.01) calculated with deadtime compensation	no	yes
K0851	EHlEncoder1	16Bit output value of the 1st single ramp generator (32Bit) [FD786a]	no	no
KK0852	EHlEncoder1	16Bit output value of the 1st single ramp generator (32Bit) [FD786a]	no	yes
KK0853	EHlEnco1 Setval	Fixed setpoint double connector of the 1st single ramp generator (32Bit) [FD786a]	no	yes
K0854	EHlEncoder2	16Bit output value of the 2nd single ramp generator (32Bit) [FD786b]	no	no
KK0855	EHlEncoder2	16Bit output value of the 2nd single ramp generator (32Bit) [FD786b]	no	yes
KK0856	EHlEnco2 Setval	Fixed setpoint double connector of the 2nd single ramp generator (32Bit) [FD786b]	no	yes

Connector number	Connector name	Description	DSP	Double word
KK0857	MasVal pos diff	Master-value correction function in function diagram 845: Position difference beween master value 1 and master value 2	no	yes
KK0858	LWcor DeltaV LW	Master-value correction function in function diagram 845: Speed difference beween master value 1 and master value 2	no	yes
K0859	Override.fixed	Fixed connector for the speed override of positioning In function diagram: 809.1	no	no
KK0860	Pos CntrSignal	Connector contains the control signals for positioning compiled from the individual binectors In function diagram: 809.6	no	yes
KK0861	32BGear 1 POS	Position setpoint output of the 32Bit gear unit	no	yes
KK0862	32BGear 1 VSetp	Speed setpoint output of the 32Bit gear unit [FD786c]	no	yes
KK0863	32BGear 2 POS	Position setpoint output of the 32Bit gear unit	no	yes
KK0864	32BGear 2 VSetp	Speed setpoint output of the 32Bit gear unit [FD786c]	no	yes
KK0866	LWcor DiffVRest	Master setpoint correction function in function diagram 845b: Speed difference still to be reduced between master setpoint 1 and master setpoint 2	no	yes
KK0867	FB_DisplActVal2	Output of offset adder 2 with limitation to ACL [LU] 32 Bit [FD794a]	no	yes
KK0868	FB_DisplActVal3	Output of offset adder 3 with limitation to ACL [LU] 32 Bit [FD794a]	no	yes
KK0870	EPos RFG V out	32 bit % speed output of basic positioner ramp generator, see function diagram 789b.8	no	yes
KK0871	Epos RFG S out	32 bit position setpoint output [LU] of basic positioner ramp generator, see function diagram 789b.8	no	yes
K0872 ... K0873	EP Set A Setp	16 bit set setpoint connector (%) of basic positioner acceleration setpoints. See function diagram 789a.7	no	no
KK0874	EP Set V Setp	32 bit set setpoint connector (%) of basic positioner. For valid speed setpoint see function diagram 789a.7	no	yes
KK0875	EP Set S Setp	32 bit set setpoint connector (LU) of basic positioner. For valid position setpoint see function diagram 789a.7	no	yes
KK0876	EP FK V Setp	32 bit fixed setpoint connector (LU) of basic positioner. Speed setpoint from U873.1, see function diagram 789a.7	no	yes
K0877 ... K0878	EP FK A Setp	16 bit fixed setpoint connector (%) of basic positioner. Acceleration setpoints from U873.2,3. see function diagram 789a.7	no	no

Connector number	Connector name	Description	DSP	Double word
KK0879	EP FK S Setp	32 bit fixed setpoint connector (LU) of basic positioner. Position setpoint from U874.1, see function diagram 789a.1	no	yes
KK0880	EP FK REF	32 bit fixed setpoint connector (LU) of basic positioner. Reference position referencing from U874.2, see function diagram 789a.1	no	yes
KK0881	EP V Setp	32 bit output connector (%) of basic positioner. Speed setpoint for precontrol to position controller, e.g. P209.B, see function diagram 789c.7	no	yes
KK0882	EP PosSetp	32 bit output connector (LU) of basic positioner. Position setpoint to position controller e.g. P190.B, see function diagram 789c.7	no	yes
KK0883	EP S ActVal out	Internal 32 bit actual position value connector (LU) of basic positioner is wired back to U850.2 to close the control loop, see function diagram 789c.7	no	yes
KK0884	EP delta S Corr	Internal 32 bit position correction value (LU) of basic positioner, outputs the correction value of the referencing process (U877.3 - U877.4 \\ window function), see function diagram 789c.7	no	yes
KK0885	EP CorrVal POS	32 bit output connector (LU) of basic positioner. Correction value for motor encoder position detection, e.g. P174.B together with correction signals KOR+, KOR-. see function diagram 789c.7	no	yes
K0886	EPSet StatusIN	The connector shows the status of the individual positioner in the form of status signals. BIT 0 : [POS_ON] BIT 1 : [REF_ON] BIT 2 : [SETUP_ON] BIT 3 : Reserved BIT 4 : [ENABLE_POS/REF] BIT 5 : [POS_TYP] BIT 6 : [D_FWD] BIT 7 : [D_BWD] BIT 8 : [REF_TYP] BIT 9 : [SPV_RIE_TYP] BIT 10: [SPV_RIE]	no	no
K0887	EP SETStatusOUT	The connector shows the status of the individual positioner in the form of status signals. BIT 0 : [POS] BIT 1 : [REF] BIT 2 : [SETUP] BIT 3 : [PSR] BIT 4 : [EN_POS_REF] BIT 5 : [POS_TYP_ACT] BIT 6 : [D_FWD_ACT] BIT 7 : [D_BWD_ACT] BIT 8 : [REF_DRIVE]	no	no

Connector number	Connector name	Description	DSP	Double word
K0888	EP POS StatusIN	Index 1: Input EPos (K888) BIT0 = ENABLE_POS BIT1 = ---------- BIT2 = POS BIT3 = SETUP BIT4 = POS_TYP_ACT (old:: ABS_REL) BIT5 = D_FWD_ACT BIT6 = D_BWD_ACT BIT7 = EXT_REF_OK B888 or B210 = 1 BIT8 = EXT_POS_OK BIT9 = SET_TRIG BIT10 = Intern POS_OK (position reached)	no	no
K0889	EPos Status OUT	K889 of n862 Index 2: Output EPos and homing BIT0 = B860 [POS_OK] BIT1 = B861 [POS_RUN] BIT2 = B862 [RFG_RUN] BIT3 = B863 [RU_ACT] BIT4 = B864 [RD_ACT] BIT5 = B866 [FWD_RUN] BIT6 = B867 [BWD_RUN] BIT7 = B865 [POS_DELTA] BIT8 = B868 [SW_E_PLUS] BIT9 = B869 [SW_E_MINUS] BIT10 = B888 [ARFD] BIT11 = B892 [F_REF_WD]	no	no
KK0890 ... KK0893	EPos_Diag	Connector diagnosis	no	yes
K0910	DP V3 G1_ZSW	Encoder 1 status word [172.7]	no	no
K0911	DP V3 G2_ZSW	Encoder 2 status word [FP172.7]	no	no
KK0912	DP V3 G1_XIST2	Encoder 1 actual position value 2 [FP712.7]	no	yes
KK0913	DP V3 G2_XIST2	Encoder 2 actual position value 2 [FP712.7]	no	yes
K2001 ... K2016	SCom1 Word	Received process data from SCom1 (16-bit)	no	no
KK2031 ... KK2045	SCom1 DWord	Received process data from SCom1 (32-bit)	no	yes
K3001 ... K3016	CB/TB Word	Received process data from CB/TB In function diagram: 120.5	no	no
KK3031 ... KK3045	CB/TB DWord	Received process data from CB/TB In function diagram: 120.6	no	yes
K4101 ... K4103 not Compact PLUS	SCI Sl.1 AnaIn	SCI1 Analog inputs Slave 1 In function diagram: Z20.7	no	no
K4201 ... K4203 not Compact PLUS	SCI Sl.2 AnaIn	SCI slave 2 Analog inputs In function diagram: Z21.8	no	no
K4501 ... K4516 not Compact PLUS	SCB Word	SCB 16-bit setpoints In function diagram: Z01.6, Z05.6	no	no
KK4531 ... KK4545 not Compact PLUS	SCB DWord	SCB 32-bit setpoints In function diagram: Z05.7	no	yes
K5101	1st EB1 AnaIn1	Analog input 1 of the first inserted EB1 In function diagram: Y01.8	no	no
K5102	1st EB1 AnaIn2	Analog input 2 of the first inserted EB1 In function diagram: Y01.8	no	no
K5103	1st EB1 AnaIn3	Analog input 3 of the first inserted EB1 In function diagram: Y01.8	no	no

Connector number	Connector name	Description	DSP	Double word
K5104	1st EB1 AnaOut1	Setpoint, analog ouptut 1 of the first inserted EB1 In function diagram: Y02.5	no	no
K5105	1st EB1 AnaOut2	Setpoint, analog output 2 of the first inserted EB1 In function diagram: Y02.5	no	no
K5106	1EB1stat.DI/DO	Display of status of the terminals (status of digital inputs/outputs) of the first inserted EB1 In function diagram: Y03.2	no	no
K5111	AnaIn 1st EB2	Analog input of the first inserted EB2 In function diagram: Y07.8	no	no
K5112	AnaIn 1st EB2	Setpoint, analog output of the first inserted EB2 In function diagram: Y07.5	no	no
K5113	Stat.DI/DO 1EB2	Display of status of the terminals (status of digital inputs/outputs) of the first inserted EB2 In function diagram: Y07.3	no	no
K5201	2nd EB1 AnaIn1	Analog input 1 of the second inserted EB1 In function diagram: Y04.8	no	no
K5202	2nd EB1 AnaIn2	Analog input 2 of the second inserted EB1 In function diagram: Y04.8	no	no
K5203	2nd EB1 AnaIn3	Analog input 3 of the second inserted EB1 In function diagram: Y04.8	no	no
K5204	2nd EB1 AnaOut1	Setpoint, analog output 1 of the second inserted EB2 In function diagram: Y05.5	no	no
K5205	2nd EB1 AnaOut2	Setpoint, analog output 2 of the second inserted EB1 In function diagram: Y05.5	no	no
K5206	2EB1stat.DI/DO	Display of status of the terminals (status of digital inputs/outputs) of the second inserted EB1 In function diagram: Y06.2	no	no
K5211	AnaIn 2nd EB2	Analog input of the second inserted EB2 In function diagram: Y08.8	no	no
K5212	AnaIn 2nd EB2	Setpoint, analog output of the second inserted EB2 In function diagram: Y08.5	no	no
K5213	Stat.DI/DO 2EB2	Display of status of the terminals (status of digital inputs/outputs) of the second inserted EB2 In function diagram: Y08.3	no	no
K6001 ... K6016 not Compact PLUS	SCom2 Word	Interface SCom2	no	no
KK6031 ... KK6045 not Compact PLUS	SCom2 DWord	Interface 2	no	yes
K7001 ... K7016	SLB Word	Setpoints SIMOLINK	no	no
KK7031 ... KK7045	SLB DWord	Setpoints SIMOLINK	no	yes
K7081	Ind.Sync-Tgr	Number of error-free synchronization telegrams, corresponding to P748.1 In function diagram 140.8	no	no

Connector number	Connector name	Description	DSP	Double word
K7082	Ind.CRC Error	Number of CRC errors, corresponding to P748.2 in function diagram 140.8	no	no
K7083	Ind.Timeout	Number of timeout errors, corresponding to P748.3 in function diagram 140.8	no	no
K7085	NodeAddrTimeout	Address of the node that sends the "Time out" special telegram, corresponding to P748.5 in function diagram 140.8	no	no
K7089	SYNCDeviation	Synchronicity deviation (65535 synchronization not active), corresponding to P748.9 in function diagram 140.8	no	no
K7091	T0 Counter	T0 counter (0 with synchonization active), corresponding to P748.11 in function diagram 140.8	no	no
K7094	Time Counter	Time slot counter, corresponding to P748.14 in function diagram 140.8	no	no
K7101 ... K7108	SIMOLINK SpecD	Special data from SIMOLINK	no	no
KK7131 ... KK7137	SIMOLINK SpecD	Special data from SIMOLINK	no	yes
K8001 ... K8016	2 CB Word	Setpoints for 2nd CB In function diagram: 130.5	no	no
KK8031 ... KK8045	2 CB DWord	Additional CB double-words In function diagram: 130.6	no	yes

Binector List

Binector list Motion Control

07.11.01

Binector number	Binector name	Description
B0000	FixBinector 0	Fixed binector 0 In function diagram 15.2, 15.4
B0001	FixBinector 1	Fixed binector 1 In function diagram 15.4
B0005 not Compact PLUS	PMU ON/OFF	Binector for input/output command via PMU
B0006 not Compact PLUS	PMU Pos Dir	Binector for positive rotation direction via PMU
B0007 not Compact PLUS	PMU Neg Dir	Binector for negative rotation direction via PMU
B0008	PMU MOP UP	Binector for "Raise mot. potentiometer" via PMU
B0009	PMU MOP DOWN	Binector for "Lower mot. potentiometer" via PMU
B0010	DigIn 1	Binary input (digital input) 1 In function diagram: 90.5
B0011	DigIn 1 inv.	Binary input (digital input) 1 inverted In function diagram: 90.5
B0012	DigIn 2	Binary input (digital input) 2 In function diagram: 90.5
B0013	DigIn 2 inv.	Binary input (digital input) 2 inverted In function diagram: 90.5
B0014	DigIn 3	Binary input (digital input) 3 In function diagram: 90.5
B0015	DigIn 3 inv.	Binary input (digital input) 3 inverted In function diagram: 90.5
B0016	DigIn 4	Binary input (digital input) 4 In function diagram: 90.5
B0017	DigIn 4 inv.	Binary input (digital input) 4 inverted In function diagram: 90.5
B0018	DigIn 5	Binary input (digital input) 5
B0019	DigIn 5 inv.	Binary input (digital input) 5 inverted
B0020	DigIn 6	Binary input (digital input) 6
B0021	DigIn 6 inv.	Binary input (digital input) 6 inverted
B0025	DigOut 1	Digital output 1 In function diagram: 90.6
B0026	DigOut 2	Digital output 2 In function diagram: 90.6
B0027	DigOut 3	Digital output 3 In function diagram: 90.6
B0028	DigOut 4	Digital output 4 In function diagram: 90.6
B0030	SCom1 TlgOFF	Telegram failure at serial interface 1 (SCom1)
B0035	CB/TB TlgOFF	TB/CB telegram failure
B0040	SLB TlgOFF	SIMOLINK telegram failure
B0041	SIMOLINKTimeout	This binector is set if timeout occurs on the SIMOLINK ring. When communication functions again, the binector is reset.

Binector number	Binector name	Description
B0042	SIMOLINK Start	This binector is set if no connection is realized on the SIMOLINK ring. This usually means that the cable is interrupted or a node is without supply voltage.
B0043	Drive Sync	Binector indicates that the drive is synchronous
B0045	2.CB TlgOFF	Telegram failure additional CB
B0047	SLB2 Timeout	This binector is set when a timeout on the additional non-active SIMOLINK ring (SLB2). When communication is re-established, the binector is reset again.
B0048	SLB2 start	This binector is set when no connection is made on the additional non-active SIMOLINK ring (SLB2). This generally means that the line is interrupted or one of the nodes is without supply voltage.
B0050 not Compact PLUS	SCB TlgOFF	SCB telegram failure
B0055 not Compact PLUS	SCom2 TlgOFF	SCom2 telegram failure
B0060	SBP CtrlTrack	SBP control track
B0061	SBP RoughPulse1	SBP rough pulse 1
B0062	SBPRoughPulse2	SBP rough pulse 2
B0063	SBP FinePulse2	SBP fine pulse 2
B0065	SBPCtrlTrckMaEn	SBP control track of the machine encoder
B0066	SBPRoughP1MaEn	SBP rough pulse 1 from the machine encoder
B0067	SBPRoughP2MaEn	SBP rough pulse 2 from the machine encoder
B0068	SBPFineP2MaEn	SBP fine pulse 2 from the machine encoder
B0070	MeasV valid	If this binector is 1, the position measured values are applicable. During initialization or during any encoder faults, the angles and the position values are not applicable. Only when this binector is set, can the angle or the position be evaluated. In the case of resolvers, encoders and multiturn encoders, the analog tracks are evaluated for monitoring.
B0071	MValValidMachEn	If this binector is 1, the position measured values of the machine encoder are valid. During initialization or during any encoder faults in the encoder, the angle and the position values are not applicable. Only when this binector is set, can the angle or the position be evaluated. In the case of resolvers, encoders and multiturn encoders, the analog tracks are evaluated for monitoring.
B0072	Zero pt acquird	The zero point deviation shown on connector K0089 is valid.
B0073	Z pt mach aqurd	The zero point deviation of the external encoder output on KK0088 is valid.
B0089	Status DTComp	The binector indicates whether the dead time compensation is enabled. The relevant function is currently not yet implemented!
B0090	CalcTimeWarn	Calculating time overload alarm
B0091	FaultCalcTime	Calculating tme overflow fault
B0092	FDS Bit0	Function dataset bit 0
B0093	FDS Bit1	Function dataset bit 1

Binector number	Binector name	Description
B0094	Fault ACK	Corresponds to Control Word 1 Bit 7 function diagram 180.8
B0099	No n-Reg Enable	Binector no speed controller enable
B0100	Rdy for ON	"Ready for switching on" binector
B0101	Not Rdy for ON	"NOT ready for switching on" binector
B0102	Rdy for Oper	"Ready for operation" binector
B0103	NotRdy for Oper	"NOT ready for operation" binector
B0104	Operation	"Operation" binector
B0105	Not operating	"Not operating" binector
B0106	Fault	"Fault" binector
B0107	No fault	"NO fault" binector
B0108	No OFF2	"NO OFF2" binector (low active!)
B0109	OFF2	"OFF2" binector (low active!)
B0110	No OFF3	"NO OFF3" binector (low active!)
B0111	OFF3	"OFF3" binector (low active!)
B0112	Blocked	"Switch-on inhibit" binector
B0113	Not Blocked	"NO switch-on inhibit" binector
B0114	Warning	"Alarm active" binector
B0115	No Warning	"NO alarm active" binector
B0116	No Deviation	"No setpoint/actual value deviation" binector
B0117	Deviation	"Setpoint/actual value deviation" binector
B0120	CompV OK	"Comparison setpoint value achieved" binector
B0121	CompV not OK	"Comparison setpoint value NOT achieved" binector
B0122	Low Voltage	"Undervoltage" binector
B0123	No Low Voltage	"NO undervoltage" binector
B0124	Energize MCon	"Demand to energize main contactor" binector
B0125	N.Energ.MCon	"Demand NOT to energize main contactor" binector
B0126	RampGen active	"Ramp-function generator active" binector
B0127	RampGen n.act.	"Ramp-function generator NOT active" binector
B0128	Speed Setp FWD	"Positive speed setpoint" binector
B0129	Speed Setp REV	"Negative speed setpoint" binector
B0132	Fly/Exc active	"Flying restart or excitation active" binector
B0133	Fly/Exc n.act.	"Flying restart or excitation NOT active" binector
B0136	Overspeed	"Overspeed" binector
B0137	No Overspeed	"NO overspeed" binector
B0138	Ext Fault 1	"External fault 1" binector
B0139	No Ext Fault 1	"NO external fault 1" binector
B0140	Ext Fault 2	"External fault 2" binector

Binector number	Binector name	Description
B0141	No Ext Fault 2	"NO external fault 2" binector
B0142	Ext Warning	"External alarm" binector
B0143	No Ext Warning	"NO external alarm" binector
B0144	Ovld Warn Drive	"Converter overload alarm" binector
B0145	No OvldWarn Drv	"NO converter overload alarm" binector
B0146	Tmp Flt Drive	"Converter overtemperature fault active" binector
B0147	No Tmp Flt Drv	"NO converter overtemperature fault active" binector
B0148	TmpWarn Drive	"Converter overtemperature alarm active" binector
B0149	No TmpWarn Drv	"NO converter overtemperature alarm active" binector
B0150	TmpWarnMotor	"Motor overtemperature alarm active" binector
B0151	No TmpWarnMotor	"NO motor overtemperature alarm active" binector
B0152	TmpFltMotor	"Motor overtemperature fault active" binector
B0153	No TmpFltMotor	"NO motor overtemperature fault active" binector
B0156	Motor PullOut	"Motor pulled out" binector
B0157	No MotorPullOut	"Motor NOT pulled out" binector
B0158	ChrgRelay close	"Bypass contactor energized" binector
B0159	ChrgRelay open	"Bypass contactor NOT energized" binector
B0162	Prechrg active	"Precharging active" binector
B0163	Prechrg n.act.	"Precharging NOT active" binector
B0200	No SpdDir Sel	No direction of rotation selected
B0201	Accel active	Acceleration active
B0202	Decel active	Deceleration active
B0203	Limitr FWD act.	Speed limitation positive rotation direction reached
B0204	Limitr REV act.	Speed limitation negative rotation direction reached
B0205	RelPosContrByps	The binector indicates that the ramp-function generator bypass for the position controller is available.
B0210	RefPoint sensed	Checkback of position sensor: Reference point detected
B0211	Pos Corrected	Status bit of position sensor: Position corrected
B0212	PosMem Valid	The binector indicates that a valid value has been registered by the measured-value memory.
B0215	MaEnAcknRef	Fixed binector 0 In function diagram 15.2, 15.4
B0216	AckPosCorMEncod	Fixed binector 0 In function diagram 15.2, 15.4
B0217	AckMVal MEncod	Fixed binector 0 In function diagram 15.2, 15.4
B0220	PosReg release	Status bit of position control released
B0221	PosRegFWDLimitr	Status bit of position control output at upper limit
B0222	PosRegREVLimitr	Status bit of position control output at lower limit

Binector number	Binector name	Description
B0227	Derating	Binector showing the reduction of the maximum current to 91 % when load cycle is exceeded. In function diagram 490.6
B0230	n-LimitrReg act	Speed limitation controller active
B0231	Torq(Lim1)act.	Upper torque limitation achieved
B0232	Torq(Lim2)act.	Lower torque limitation achieved
B0233	AmpLimitr act.	Current limitation active
B0234	n-Reg in Limitr	Limitation active at speed controller
B0241	LZ receive OK	Binary output signal for validity of the ready signal of the receive block 1: OK 0: Not OK In function diagram 170
B0242	LZ receive FAIL	Binary output signal for error on the ready signal of the receive block 1: Sustained error on ready signal 0: Ready signal O In function diagram 170
B0243	LZ.MasterApCycl	PROFIDrive V3: this binector is always exactly unity if the current DP cycle is a master application cycle (position controller on master is recalculated). In function diagram 170
B0250	I-Reg in Limitr	Current controller in limitation (voltage limit achieved)
B0251	Field Weakening	Field weakening active
B0255	Excitation End	The excitation time of the motor has expired.
B0270	Energize MCon	Energize main contactor. Same significance as binector 124.
B0275	Open Brake	"Open brake" binector (high)
B0276	Close Brake	"Close brake" binector (high)
B0277	SetpRel brake	Setpoint release of braking control
B0278	InvRel Brake	Inverter release of braking control
B0279	Chkbk BrakeCl	"Brake cannot be opened" alarm. After brake is opened and after brake opening time has expired, the brake checkback still indicates "Brake closed"
B0280	Chkbk BrakeOp	"Brake cannot be closed" alarm. After brake is closed and the brake closing time has expired, brake checkback still indicates "Brake open"
B0281	BrakeThr1 over	The (current) actual value has exceeded brake threshold 1.
B0282	BrakeThr2 under	The (speed) actual value has fallen short of brake threshold 2
B0290	DC volts >=thr	DC link bus voltage is greater than the parameterizable threshold
B0291	DC volts < thr	DC link bus voltage is less than the parameterizable threshold
B0302	Set Pos P	Control signal for setting the position actual-value detection
B0303	Pos Corr'n PosP	Control signal to the position actual-value detection for correcting the position in positive direction

Binector number	Binector name	Description
B0304	PosCorr'nNegP	Control signal to the position actual-value detection for correcting the position in negative direction
B0305	Rel Ctrl P	Control signal for the position actual-value detection for changing over to the operating mode "Control", i.e. the position control is inhibited.
B0306	PosCorrPos Ext	Correct position + external encoder
B0307	Rel Ref P	Control signal to the position actual-value detection for enabling referencing
B0308	Rel MValMem P	Control signal to the position actual-value detection for enabling the measured value memory
B0311	QuickOutp1 P	Quick output of positioning. The significance is determined with MD47 and MD48 (U501.47 and 48)
B0312	QuickOutp2 P	Quick output of positioning. The significance is determined with MD47 and MD48 (U501.47 and 48)
B0313	QuickOutp3 P	Quick output of positioning. The significance is determined with MD47 and MD48 (U501.47 and 48)
B0314	QuickOutp4 P	Quick output of positioning. The significance is determined with MD47 and MD48 (U501.47 and 48)
B0315	FastOutp5.P	Fixed binector 0 In function diagram 15.2, 15.4
B0316	FastOutp6.P	Fixed binector 0 In function diagram 15.2, 15.4
B0330	Simulation	Binector simulation
B0350	FaultTechnolog	Fixed binector 0 In function diagram 15.2, 15.4
B0351	ToggleBitOutp	Fixed binector 0 In function diagram 15.2, 15.4
B0352	DwellTimeActive	Fixed binector 0 In function diagram 15.2, 15.4
B0353	StartEnab Outp	Fixed binector 0 In function diagram 15.2, 15.4
B0354	Process Runs	Fixed binector 0 In function diagram 15.2, 15.4
B0355	Pos Reached	Fixed binector 0 In function diagram 15.2, 15.4
B0356	Axis FWD	Fixed binector 0 In function diagram 15.2, 15.4
B0357	Axis BWD	Fixed binector 0 In function diagram 15.2, 15.4
B0358	Function End	Fixed binector 0 In function diagram 15.2, 15.4
B0359	SW LimitSwitch	Fixed binector 0 In function diagram 15.2, 15.4
B0360	Vir Master act.	Fixed binector 0 In function diagram 15.2, 15.4
B0361	Axis Home	
B0362	T Change	Fixed binector 0 In function diagram 15.2, 15.4
B0363	Brake closed	Demand from the positioning to close the brake.
B0400	POWER ON	POWER ON signal
B0401	FixBit U021	FB: 1st fixed bit
B0402	FixBit U022	FB: 2nd fixed bit

Binector number	Binector name	Description
B0403	FixBit U023	FB: 3rd fixed bit
B0404	FixBit U024	FB: 4th fixed bit
B0405	FixBit U025	FB: 5th fixed bit
B0406	FixBit U026	FB: 6th fixed bit
B0407	FixBit U027	FB: 7th fixed bit
B0408	FixBit U028	FB: 8th fixed bit
B0409	OFF&ActV	OFF and shutdown threshold Function diagram 480
B0410 ... B0425	K->B CONV1	16 binectors of the 1st connector -> binector converter
B0430 ... B0445	K->B CONV2	16 binectors of the 2nd connector -> binector converter
B0450 ... B0465	K->B CONV3	16 binectors of the 3rd connector -> binector converter
B0470 ... B0471	LIMITR B 1.74	1st limiter 16-bit
B0472 ... B0473	LIMITR B 2.38	2nd limiter 16-bit
B0474 ... B0475	LIMITR B 2.48	1st limiter 32-bit
B0476	LMTMON B 1.18	1st limit-value monitor: 16-bit
B0477	LMTMON B 2.49	2nd limit-value monitor: 16-bit
B0478	LMTMON B 2.68	3rd limit-value monitor: 32-bit
B0479	LMTMON B 1.75	4th limit-value monitor: 32-bit
B0480 ... B0481	CAMCON 0.60	Cam controller 1
B0482 ... B0483	CAMCON 0.61	Cam controller 2
B0490 ... B0491	COUNTER 1.36 B	16-bit counter: positive overflow and negative overflow
B0501 ... B0502	RS-FF 1.34	1st RS flipflop 1: Q and Q_transv
B0503 ... B0504	RS-FF 1.36	2nd RS flipflop
B0505 ... B0506	RS-FF 1.49	3rd RS flipflop
B0507 ... B0508	RS-FF 1.66	4th RS flipflop
B0509 ... B0510	RS-FF 1.82	5th RS flipflop
B0511 ... B0512	RS-FF 1.97	6th RS flipflop
B0513 ... B0514	RS-FF 1.98	7th RS flipflop
B0515 ... B0516	RS-FF 2.13	8th RS flipflop
B0517 ... B0518	RS-FF 2.14	9th RS flipflop
B0519 ... B0520	RS-FF 2.29	10th RS flipflop
B0521 ... B0522	RS-FF 2.30	11th RS flipflop
B0523 ... B0524	RS-FF 2.71	12th RS flipflop
B0525 ... B0526	D-FF 1.25	1st D FF
B0527 ... B0528	D-FF 2.15	2nd D FF
B0530 ... B0531	TIMER 0.95	1st timer
B0532 ... B0533	TIMER 1.67	2nd timer
B0534 ... B0535	TIMER 1.84	3rd timer
B0536 ... B0537	TIMER 1.99	4th timer

Binector number	Binector name	Description
B0538 ... B0539	TIMER 1.83	5th timer
B0540 ... B0541	TIMER 2.16	6th timer
B0542 ... B0543	TIMER 1.50	7th timer
B0544 ... B0548	ConnToParChkbk	Checkback for connector-parameter converter 0=No memory access 1=Memory access necessary
B0550	ComfRGen Out=0	Output of the comfort ramp-function generator is zero
B0551	ComfRGen (y=x)	Acceleration/deceleration of the comfort ramp-function generator is finished (y=x)
B0552	ComfRGen First	Initial acceleration of comfort ramp-function generator (low active)
B0555	TechCtrl lim	Technology controller at output limitation
B0556	TechCtrl lock	Technology controller inhibited
B0560	WobbSlaveSync	Synchronizing signal for slave
B0561 ... B0568	TraceTriggerOut	Fixed binector 0 In function diagram 15.2, 15.4
B0570	SampTimeChB0.66	Binary output signal of the 1st sampling time changer
B0571	SampTimeChB0.67	Binary output signal of the 2nd sampling time changer
B0572	SampTimeChB0.68	Binary output signal of the 3rd sampling time changer
B0573	SampTimeChB0.69	Binary output signal of the 4th sampling time changer
B0574	SampTimeChB0.70	Binary output signal of the 5th sampling time changer
B0575	SampTimeChB0.71	Binary output signal of the 6th sampling time changer
B0576	PulsGen1 B 0.65	Binary output signal of the 1st pulse generator
B0577	I32 OG B 1.53	Flag for output value at upper limit of the 1st integrator
B0578	I32 UG B 1.53	Flag for output value at lower limit of the 1st integrator
B0579	I32 OG B 1.85	Flag for output value at upper limit of the 2nd integrator
B0580	I32 UG B 1.85	Flag for output value at lower limit of the 2nd integrator
B0581	RealMaster P OV	Binector for indicating a positive overflow of the input value
B0582	RealMaster N OV	Binector for indicating a negative overflow of the input value
B0585	ErrorTrackMg	The binector indicates that the motor encoder position tracking has detected an overflow. This overflow occurs when a linear axis has exceeded the permitted number of 15 overflows.
B0586	ErrorTrackEg	The binector indicates that the motor encoder position tracking has detected an overflow. This overflow occurs when a linear axis has exceeded the permitted number of 15 overflows.
B0601	AND 0.78	1st AND element
B0602	AND 0.79	2nd AND element
B0603	AND 0.89	3rd AND element
B0604	AND 1.09	4th AND element
B0605	AND 1.22	5th AND element
B0606	AND 1.35	6th AND element

Binector number	Binector name	Description
B0607	AND 1.44	7th AND element
B0608	AND 1.61	8th AND element
B0609	AND 1.62	9th AND element
B0610	AND 1.79	10th AND element
B0611	AND 1.80	11th AND element
B0612	AND 1.92	12th AND element
B0613	AND 2.26	13th AND element
B0614	AND 2.39	14th AND element
B0615	AND 2.51	15th AND element
B0616	AND 2.52	16th AND element
B0617	AND 2.54	17th AND element
B0618	AND 2.92	18th AND element
B0619	OR 0.90	1st OR element
B0620	OR 0.91	2nd OR element
B0621	OR 1.23	3rd OR element
B0622	OR 1.45	4th OR element
B0623	OR 1.63	5th OR element
B0624	OR 1.81	6th OR element
B0625	OR 1.93	7th OR element
B0626	OR 2.10	8th OR element
B0627	OR 2.11	9th OR element
B0628	OR 2.40	10th OR element
B0629	OR 2.70	11th OR element
B0630	OR 2.93	12th OR element
B0631 ... B0638	SH 1.68 B	Binectors of 1st S&H Block
B0641	INVERTER 1.08	1st inverter
B0642	INVERTER 1.10	2nd inverter
B0643	INVERTER 1.11	3rd inverter
B0644	INVERTER 1.37	4th inverter
B0645	INVERTER 1.46	5th inverter
B0646	INVERTER 1.64	6th inverter
B0647	INVERTER 1.94	7th inverter
B0648	INVERTER 2.41	8th inverter
B0649	INVERTER 2.53	9th inverter
B0650	INVERTER 2.55	10th inverter
B0651 ... B0658	SH 1.69 B	Binectors of 2nd S&H Block
B0661	SWITCH B 0.94	1st digital switch
B0662	SWITCH B 0.97	2nd digital switch

Binector number	Binector name	Description
B0663	SWITCH B 1.48	3rd digital switch
B0664	SWITCH B 1.65	4th digital switch
B0665	SWITCH B 1.96	5th digital switch
B0666	EXOR 0.93	1st EXOR element
B0667	EXOR 0.96	2nd EXOR element
B0668	EXOR 2.28	3rd EXOR element
B0669 ... B0676	SH 1.70 B	Binectors of 3rd S&H Block
B0681	NAND 0.92	1st NAND element
B0682	NAND 1.24	2nd NAND element
B0683	NAND 1.47	3rd NAND element
B0684	NAND 1.95	4th NAND element
B0685	NAND 2.12	5th NAND element
B0686	NAND 2.27	6th NAND element
B0687	NAND 2.42	7th NAND element
B0688	NAND 2.94	8th NAND element
B0690	Plot FricChar	Recording of friction characteristic finished
B0800	tg_Cor_Status	Is set while correction of position setpoint is active
B0803	Start/Stop	During the time span of the start/stop length (U611)
B0804	TG_Mode 1	Fixed binector, operating mode "Start"
B0805	TG_Mode 2	Fixed binector, operating mode "Stop"
B0806	TG_Function1	Fixed binector gearbox function
B0807	TG_Function2	Fixed binector table function
B0808	Status Homing	0: Axis is not homed 1: Axis is homed
B0809	Status Home_inv	0: Axis is homed 1: Axis is not homed
B0810	Stat_Dis_An_cor	0: No correction 1: Displacement angle correction active
B0811	Status Sync	0: No synchronization 1: Synchronization carried out
B0812	Backstop active	0: Backstop not active 1: Backstop active The binector remains on 1 until the synchronize master setpoint has been implemented.
B0813	Backstop n. act	0: Backstop active 1: Backstop not active
B0815	RGen Active	1 = Speed ramp-function generator is active. V<>0
B0816	RGen RampAct	1 = Acceleration ramp of the speed ramp-function generator is active. |X| > |V|
B0817	RGen_Setp OK	1 = Setpoint speed of the ramp-function generator has been reached. V=X
B0818	RGen_A_ACT	1 = Deceleration ramp of the speed ramp-function generator is active.|X| < |V|

Binector number	Binector name	Description
B0819	RGen_zero	1 = Output of the speed ramp-function generator is 0. V=0
B0820	CatchUp_end	Catch-up finished [CU_TE] The catch-up function has been completed after shutdown. The current speed has been reached and synchronization to the master value can be softwired to the synchronization master value (U676) via this binector.
B0821	Stopping Pos ok	Shutdown position reached [CU_PR] The axis has been stopped and positioned. A different function, e.g. pressure-plate change, can be initiated in this position via this binector.
B0822	V CatchUp OK	Catch-up speed reached [CU_VR] The axis was set to stop, and the set catch-up speed has been reached.
B0824	FB Release Ref	Fixed binector for enabling referencing
B0825	FB Rel PosCorr	Fixed binector for release of position correction
B0828	Trig. MastV Cor	Trigger master-value correction is used with the master-value correction function during homing to compensate for the actual-value jump. To this end, this connector can be connected to "Trigger master-value correction" B828, and "Absolute value master-value correction" KK308 can be connected to "Correction displacement" U453. Function diagram: 817 (845)
B0829	Fault Ref. F2	Error in homing proximity switch (printing index) outside window 2
B0830	MasterV Cor Act	Fixed binector 0 In function diagram 15.2, 15.4
B0831	Ramp inactive	Start operation: (n658 = 1) 0: Start/stop while ramping 1: Start active and in constant speed Stop mode: (n658 = 2) 0: Aussetzer in Rampenfahrt 1: Stop active and at standstill
B0832	Start active	1: Start procedure running (ramp and constant speed) 0: Start inactive
B0833	Stop active	1: Stop procedure running (ramp and constant speed) 0: Stop inactive
B0834	Stop at tab end	1: Axis reached table function and table end 0: Table running, or no table function selected
B0835	B SLE active	Simulink encoder active
B0836	Sync in F1	1 = synchronous in F2 The state of the synchronizing movement is acknowledged by binectors (e.g. synchronizing speed can thus be adjusted). The binector indicates that the synchronizing difference is shown clearly in the window.
B0837	Sync.in F2	1 = synchronous in F2 The state of the synchronizing movement is acknowledged by binectors (e.g. synchronizing speed can thus be adjusted). The binector indicates that the synchronizing difference is shown clearly in the window.
B0840	Positioning act	

Binector number	Binector name	Description
B0850	EHIEncoder1 POV	Binector output of the 1st single ramp generator (32 bit) for displaying the upper limit active. [FP786a]
B0851	EHIEncoder1 NOV	Binector output of the 1st single ramp generator (32 bit) for displaying the lower limit active. [FP786a]
B0852	EHIEncoder2 POV	Binector output of the 2nd single ramp generator (32 bit) for displaying the upper limit active. [FP786b]
B0853	EHIEncoder1 NOV	Binector output of the 2nd single ramp generator (32 bit) for displaying the lower limit active. [FP786b]
B0856	Emerg/lowering	Fixed binector 0 In function diagram 15.2, 15.4
B0858	Uzk>max lower	Fixed binector 0 In function diagram 15.2, 15.4
B0859	Uzk< min lower	Fixed binector 0 In function diagram 15.2, 15.4
B0860	EPos POS OK	POS_OK (in window)
B0861	EPos POS_RUN	POS_RUN (positioner running)
B0862	EPos RFG_RUN	RFG_RUN (ramp generator running)
B0863	EPos RU_ACT	RU_ACT (acceleration ramp active)
B0864	EPos RD_ACT	RD_ACT (deceleration ramp active)
B0865	EPos FWD_RUN	Status of individual positioning ramp generator Axis running in positive direction
B0866	EPos BWD_RUN	Status of individual positioning ramp generator Axis running in negative direction
B0867	EPos POS_DELTA	POS_REST (residual distance present)
B0868	EPos_SW_E_PLUS	Basic positioner ramp function generator feedback signal SW_E_PLUS (software limit switch PLUS reached) Function diagram 789b.8
B0869	EPos_SW_E_MINUS	Basic positioner ramp function generator feedback signal SW_E_MINUS (software limit switch MINUS reached) Function diagram 789b.8
B0870	SET_EN_POS_REF	Basic positioner set setpoint control signal ENABLE_POS_REF (enable basic positioner) Function diagram 789a.7
B0871	Epos_SET_REF	Basic positioner set setpoint control signal REF (enable referencing on the fly) Function diagram 789a.7
B0872	EPos_SET_POS	Basic positioner set setpoint control signal POS (enable positioning) Function diagram 789a.7
B0873	EPos_SET_SETUP	Basic positioner set setpoint control signal SETUP (enable setup) Function diagram 789a.7
B0874	SET_POS_TYP_ACT	Basic positioner set setpoint control signal POS_TYP_ACT (valid positioner mode) 0=absolute 1=relative Function diagram 789a.7
B0875	SET_D_FWD_ACT	Basic positioner set setpoint control signal D_FWD_ACT, (valid positive direction) Function diagram 789a.7

Binector number	Binector name	Description
B0876	SET_D_BWD_ACT	Basic positioner set setpoint control signal D_BED_ACT (valid negative direction) Function diagram 789a.7
B0877	EPos_SET_PSR	Basic positioner set setpoint control signal PSR (positioning, setup, referencing) Function diagram 789a.7
B0878 ... B0887	EPos FBin STW	Fixed binector control word from U875.1 to U875.10 See function diagram 788a
B0888	EPos ARFD	Basic positioner correction/referencing check-back signal ARFD (axis referenced) Function diagram 789c.7
B0889	EPos Ref POV	Basic positioner correction/referencing correction signals POV (positive overflow) Function diagram 789c.7
B0890	EPos Ref NOV	Basic positioner correction/referencing correction signals NOV (negative overflow) Function diagram 789c.7
B0891	EPos Frg. IRQ	Basic positioner correction/referencing control signal Enable measured value memory Function diagram 789c.7
B0892	EPos Window2	Basic positioner correction/referencing check-back signals F_REF_WD (print mark outside window2) Function diagram 789c.5
B0893	REF_DRIVE	[REF_DRIVE] Homing has been selected and is active or not yet finished.
B0894	EP SPV_RIE_ACKN	Basic positioner transmit set setpoint SPV_RIE_ACKN acknowledge transfer by SPV_RIE when transfer triggered (SPV_RIE_TYP = 0) Function diagram 789a.6
B0895	EPos SET REF_D	Basic positioner set/setpoint block REF enable direction 0=right 1=left Function diagram 789a
B0910 ... B0913	DP V3 FCT G1	DP V3 G1_STW function 1-4 [FP712.7] B910 = Bit 0 -> function1 G1_STW B911 = Bit 1 -> function2 G1_STWc B912 = Bit 2 -> function3 G1_STW B913 = Bit 3 -> function4 G1_STW
B0914 ... B0917	DP V3 FCT G2	DP V3 G2_STW function 1-4 [FP712.7] B914 = Bit 0 -> function1 G1_STW B915 = Bit 1 -> function2 G1_STW B916 = Bit 2 -> function3 G1_STW B917 = Bit 3 -> function4 G1_STW
B0918	DPV3 EnabRefM	DP V3 Enable motor encoder referencing [FP172.7]
B0919	DPV3 EnabRefE	DP V3 Enable external encoder referencing [FP172.7]
B0920	DPV3 SetRefPtM	DP V3 Set motor encoder reference point [FP712.7]
B0921	DPV3 SetRefPtE	DP V3 Set external encoder reference point [FP712.7]
B0922	DPV3 MovRefPtM	DP V3 Displace motor encoder reference point [FP172.7]
B0923	DPV3 MovRefPtE	DP V3 Set external encoder reference point [FP712.7]
B0924	DPV3 EnaMotMVM	DP V3 Enable motor encoder measured value memory [FP172.4]

Binector number	Binector name	Description
B0925	DPV3 EnaExtMVM	DP V3 Enable external encoder measured value memory [FP172.4]
B0926	DPV3 Conf DIN4	DP V3 Configuration measured value memory for digital input4 [FP172.4] 0=pos. edge 1=neg. edge
B0927	DPV3 Conf DIN5	DP V3 Configuration measured value memory for digital input4 [FP172.4] 0=pos. edge 1=neg. edge
B0928	DPV3 Ack Fault	DP V3 Fault acknowledgement MASTERDRIVES [FP172]
B0929	DPV3 EN DIN4	DP V3 Enable measured value memory for digital input4 Enable digital input DIN4 for the measured value memory [FP90.7]
B0930	DPV3 EN DIN5	DP V3 Enable measured value memory for digital input5 Enable digital input DIN5 for the measured value memory [FP90.7]
B0931	DPV3 RoughTrig	Encoder interface: The rough pulse for the status machine SD6 (check referencing) is triggered with the rough pulse trigger for the referencing mode with zero pulse only. A rough pulse is created in this case from the master via status SD6.
B2100 ... B2115	SCom1Word1Bit	USS Scom1 1st word In function diagram: 60.1
B2200 ... B2215	SCom1Word2Bit	USS Scom1 2nd word
B2300 ... B2315	SCom1Word3Bit	USS Scom1 3rd word
B2400 ... B2415	SCom1Word4Bit	USS Scom1 4th word
B2500 ... B2515	SCom1Word5Bit	USS Scom1 5th word
B2600 ... B2615	SCom1Word6Bit	USS Scom1 6th word
B2700 ... B2715	SCom1Word7Bit	USS Scom1 7th word
B2800 ... B2815	SCom1Word8Bit	USS Scom1 8th word
B2900 ... B2915	SCom1Word9Bit	USS Scom1 9th word
B3100 ... B3115	CB/TBWord1Bit	TB/CB 1st word
B3200 ... B3215	CB/TBWord2Bit	TB/CB 2nd word
B3300 ... B3315	CB/TBWord3Bit	TB/CB 3rd word
B3400 ... B3415	CB/TBWord4Bit	TB/CB 4th word
B3500 ... B3515	CB/TBWord5Bit	TB/CB 5th word
B3600 ... B3615	CB/TBWord6Bit	TB/CB 6th word
B3700 ... B3715	CB/TBWord7Bit	TB/CB 7th word
B3800 ... B3815	CB/TBWord8Bit	TB/CB 8th word
B3900 ... B3915	CB/TBWord9Bit	TB/CB 9th word
B4100 ... B4115 not Compact PLUS	SCI Sl1DigIn	Digital inputs SC1 slave 1
B4120 ... B4135 not Compact PLUS	SCI Sl1DigInN	Binary inputs inverted SC1 Slave 1

Binector number	Binector name	Description
B4200 ... B4215 not Compact PLUS	SCI Sl2DigIn	Digital inputs SC1 slave 2
B4220 ... B4235 not Compact PLUS	SCI Sl2DigInN	Binary inputs inverted SC1 Slave 2
B4500 ... B4515 not Compact PLUS	SCB Word1 Bit	SCB 1st word
B4600 ... B4615 not Compact PLUS	SCB Word2 Bit	SCB 2nd word
B4700 ... B4715 not Compact PLUS	SCB Word3 Bit	SCB 3rd word
B4800 ... B4815 not Compact PLUS	SCB Word4 Bit	SCB 4th word
B4900 ... B4915 not Compact PLUS	SCB Word5 Bit	SCB 5th word
B5101	1EB1WireAnaIn1	Signal for wire break at analog input 1 with the first inserted EB1
B5102	1EB1 U>8VAnaIn2	Signal for high at input (U_in > 8V) at analog input 2 with the first inserted EB1
B5103	1EB1 U>8VAnaIn3	Signal for high at input (U_in > 8V) at analog input 3 with the first inserted EB1
B5104	1stEB1 DI1 inv.	Digital input 1 inverted on the first inserted EB1
B5105	1stEB1 DI1	Digital input 1 on the first inserted EB1
B5106	1stEB1 DI2 inv.	Digital input 2 inverted on the first inserted EB1
B5107	1stEB1 DI2	Digital input 2 on the first inserted EB1
B5108	1stEB1 DI3 inv.	Digital input 3 inverted on the first inserted EB1
B5109	1stEB1 DI3	Digital input 3 on the first inserted EB1
B5110	1stEB1 DI4 inv.	Digital input 4 inverted on the first inserted EB1
B5111	1stEB1 DI4	Digital input 4 on the first inserted EB1
B5112	1stEB1 DI5 inv.	Digital input 5 inverted on the first inserted EB1
B5113	1stEB1 DI5	Digital input 5 on the first inserted EB1
B5114	1stEB1 DI6 inv.	Digital input 6 inverted on the first inserted EB1
B5115	1stEB1 DI6	Digital input 6 on the first inserted EB1
B5116	1stEB1 DI7 inv.	Digital input 7 inverted on the first inserted EB1
B5117	1stEB1 DI7	Digital input 7 on the first inserted EB1
B5121	WireBreak1stEB2	Signal for wire break on the first inserted EB2
B5122	BI1 inv.1stEB2	Digital input 1 inverted on the first inserted EB2
B5123	BI1 1st EB2	Digital input 1 on the first inserted EB2
B5124	BI2 inv. 1stEB2	Digital input 2 inverted on the first inserted EB2
B5125	BI 2 1st EB2	Digital input 2 on the first inserted EB2
B5201	2EB1WireAnaIn1	Signal for wire break at analog input 1 on the second inserted EB1
B5202	2EB1 U>8VAnaIn2	Signal for high at input (U_in > 8V) at analog input 2 on the second EB1
B5203	2EB1 U>8VAnaIn3	Signal for high at input (U_in > 8V) at analog input 3 on the second inserted EB1
B5204	2ndEB1 DI1 inv.	Digital input 1 inverted on the second inserted EB1

Binector number	Binector name	Description
B5205	2ndEB1 DI1	Digital input 1 on the second inserted EB1
B5206	2ndEB1 DI2 inv.	Digital input 2 inverted on the second inserted EB1
B5207	2ndEB1 DI2	Digital input 2 on the second inserted EB1
B5208	2ndEB1 DI3 inv.	Digital input 3 inverted on the second EB1
B5209	2ndEB1 DI3	Digital input 3 on the second inserted EB1
B5210	2ndEB1 DI4 inv.	Digital input 4 inverted on the second inserted EB1
B5211	2ndEB1 DI4	Digital input 4 on the second inserted EB1
B5212	2ndEB1 DI5 inv.	Digital input 5 inverted on the second inserted EB1
B5213	2ndEB1 DI5	Digtial input 5 on the second inserted EB1
B5214	2ndEB1 DI6 inv	Digital input 6 inverted on the second inserted EB1
B5215	2ndEB1 DI6	Digital input 6 on the second inserted EB1
B5216	2ndEB1 DI7 inv.	Digital input 7 inverted on the second inserted EB1
B5217	2ndEB1 DI7	Digital input 7 on the second inserted EB1
B5221	WireBreak2ndEB2	Signal for wire break on the second inserted EB2
B5222	BI1 inv. 2ndEB2	Digital input 1 inverted on the second inserted EB2
B5223	BI 1 2nd EB2	Digital input 1 on the second inserted EB2
B5224	BI2 inv. 2ndEB2	Binary input 2 inverted on the second inserted EB2
B5225	BI 2 2nd EB2	Binary input 2 on the second inserted EB2
B6100 ... B6115 not Compact PLUS	SCom2Word1Bit	SCom2 1st word
B6200 ... B6215 not Compact PLUS	SCom2Word2Bit	SCom2 2nd word
B6300 ... B6315 not Compact PLUS	SCom2Word3Bit	SCom2 3rd word
B6400 ... B6415 not Compact PLUS	SCom2Word4Bit	SCom2 4th word
B6500 ... B6515 not Compact PLUS	SCom2Word5Bit	SCom2 5th word
B6600 ... B6615 not Compact PLUS	SCom2Word6Bit	SCom2 6th word
B6700 ... B6715 not Compact PLUS	SCom2Word7Bit	SCom2 7th word
B6800 ... B6815 not Compact PLUS	SCom2Word8Bit	SCom2 8th word
B6900 ... B6915 not Compact PLUS	SCom2Word9Bit	SCom2 9th word
B7010	SLB Appl.Flag 0	SIMOLINK application flag 1
B7011	SLB Appl.Flag 1	SIMOLINK application flag 2
B7012	SLB Appl.Flag 2	SIMOLINK application flag 3
B7013	SLB Appl.Flag 3	SIMOLINK application flag 4
B7100 ... B7115	SLB Word1 Bit	SIMOLINK 1st word
B7200 ... B7215	SLB Word2 Bit	SIMOLINK 2nd word
B7300 ... B7315	SLB Word3 Bit	SIMOLINK 3rd word

Binector number	Binector name	Description
B7400 ... B7415	SLB Word4 Bit	SIMOLINK 4th word
B7500 ... B7515	SLB Word5 Bit	SIMOLINK 5th word
B7600 ... B7615	SLB Word6 Bit	SIMOLINK 6th word
B7700 ... B7715	SLB Word7 Bit	SIMOLINK 7th word
B7800 ... B7815	SLB Word8 Bit	SIMOLINK 8th word
B7900 ... B7915	SLB Word9 Bit	SIMOLINK 9th word
B8100 ... B8115	2ndCBWord1Bit	2nd CB 1st word
B8200 ... B8215	2ndCBWord1Bit	2nd CB 2nd word
B8300 ... B8315	2ndCBWord1Bit	2nd CB 3rd word
B8400 ... B8415	2ndCBWord1Bit	2nd CB 4th word
B8500 ... B8515	2ndCBWord1Bit	2nd CB 5th word
B8600 ... B8615	2ndCBWord1Bit	2nd CB 6th word
B8700 ... B8715	2ndCBWord1Bit	2nd CB 7th word
B8800 ... B8815	2ndCBWord1Bit	2nd CB 8th word
B8900 ... B8915	2ndCBWord1Bit	2nd CB 9th word

List of Function Data Set parameters

List of function data set parameters Motion Control (FDS list)

07.11.01

Parameter number	Parameter name	Index 1	Index 2	Index 3	Index 4
P191	Smooth Pos Set	0	0	0	0
P195	Smooth Pos Act	0	0	0	0
P199	Smooth Pos Diff	0	0	0	0
P204	Pos Reg Kv	0,1	0,1	0,1	0,1
P206	Pos Reg Time	0	0	0	0
P207	PosRegLimitFix	100	100	100	100
P221	Smooth n(set)	0	0	0	0
P233	n-Reg Adapt 1	0	0	0	0
P234	n-Reg Adapt 2	100	100	100	100
P235	n-Reg Gain1	10	10	10	10
P236	n-RegGain2	10	10	10	10
P239	Smoothing I Comp	2	2	2	2
P240	n-Reg Time	50	50	50	50
P246	Scale Droop	0	0	0	0
P249	DT1 Function T1	0	0	0	0
P250	DT1 Function Td	0	0	0	0
P263	FSetpTorq(Lim1)	100	100	100	100
P264	FSetpTorq(Lim2)	-100	-100	-100	-100
P401	Fixed setpoint 1	0	0	0	0
P402	Fixed setpoint 2	0	0	0	0
P403	Fixed setpoint 3	0	0	0	0
P404	Fixed setpoint 4	0	0	0	0
P405	Fixed Setp 5	0	0	0	0
P406	Fixed Setp 6	0	0	0	0
P407	Fixed Setp 7	0	0	0	0
P408	Fixed Setp 8	0	0	0	0
P409	Fixed Setp 9	0	0	0	0
P410	Fixed Setp 10	0	0	0	0
P411	Fixed Setp 11	0	0	0	0
P412	Fixed Setp 12	0	0	0	0
P413	Fixed Setp 13	0	0	0	0
P414	Fixed Setp 14	0	0	0	0
P415	Fixed Setp 15	0	0	0	0
P416	Fixed Setp 16	0	0	0	0
P434	Scale Add Setp1	100	100	100	100
P439	Scale Add Setp2	100	100	100	100
P444	Scale Main Setp	100	100	100	100
P448	Jog Setp 1	0	0	0	0
P449	Jog Setp 2	0	0	0	0
P450	Jog Setp 3	0	0	0	0

Parameter number	Parameter name	Index 1	Index 2	Index 3	Index 4
P452	n(max,FWDSpeed)	100	100	100	100
P453	n(max,REVSpeed)	-100	-100	-100	-100
P462	Accel. Time	0,5	0,5	0,5	0,5
P464	Decel. Time	0,5	0,5	0,5	0,5
P469	SmoothRGenOut	0	0	0	0
P471	Scale Torq(PRE)	100	100	100	100
P641	AnaOut Conf	0	0	0	0
P642	AnaOut Smooth	0	0	0	0
P643	CU AnalogOutGain	10	10	10	10
P644	AnaOut Offset	0	0	0	0
P792	Perm Deviation	3	3	3	3
P793	Set/Act Hyst	2	2	2	2
P794	Deviation Time	3	3	3	3
P796	Compare Value	100	100	100	100
P797	Compare Hyst	3	3	3	3
P798	Compare Time	3	3	3	3
P800	OFF Value	0,5	0,5	0,5	0,5
P801	OFF Time	0	0	0	0
U001	FixSetp 17	0	0	0	0
U002	FixSetp 18	0	0	0	0
U003	FixSetp 19	0	0	0	0
U004	FixSetp 20	0	0	0	0
U005	FixSetp 21	0	0	0	0
U006	FixSetp 22	0	0	0	0
U007	FixSetp 23	0	0	0	0
U008	FixSetp 24	0	0	0	0
U009	FixSetp 25	0	0	0	0
U011	FixSetp 26	0	0	0	0
U012	FixSetp 27	0	0	0	0
U013	FixSetp 28	0	0	0	0
U014	FixSetp 29	0	0	0	0
U015	FixSetp 30	0	0	0	0
U016	FixSetp 31	0	0	0	0
U017	FixSetp 32	0	0	0	0
U018	FixSetp 33	0	0	0	0
U021	Fixed Bit 1	0	0	0	0
U022	Fixed Bit 2	0	0	0	0
U023	Fixed Bit 3	0	0	0	0
U024	Fixed Bit 4	0	0	0	0
U025	Fixed Bit 5	0	0	0	0
U026	Fixed Bit 6	0	0	0	0
U027	Fixed Bit 7	0	0	0	0
U028	Fixed Bit 8	0	0	0	0

Parameter number	Parameter name	Index 1	Index 2	Index 3	Index 4
U129	FSetpConnLimitr1	100	100	100	100
U131	FSetpConnLimitr2	100	100	100	100
U133	FSetp DConnLmt	100	100	100	100
U156	ON-Pos Cam1	0	0	0	0
U157	OFF-Pos Cam1	0	0	0	0
U158	ON-Pos Cam2	0	0	0	0
U159	OFF-Pos Cam2	0	0	0	0
U162	ON-Pos Cam3	0	0	0	0
U163	OFF-Pos Cam3	0	0	0	0
U164	ON-Pos Cam4	0	0	0	0
U165	OFF-Pos Cam4	0	0	0	0
U217	Weight T Char	100	100	100	100
U294	Time Timer1	0	0	0	0
U297	Time Timer2	0	0	0	0
U300	Time Timer3	0	0	0	0
U303	Time Timer4	0	0	0	0
U306	Time Timer5	0	0	0	0
U309	Time Timer6	0	0	0	0
U313	Time Timer7	0	0	0	0
U330	ComfRGenAccelT	10	10	10	10
U331	ComfRGenUnitAT	0	0	0	0
U332	ComfRGenDecelT	10	10	10	10
U333	ComfRGenUnitDT	0	0	0	0
U334	ComfRGenInitRd	0	0	0	0
U335	ComfRGenEndRd	0	0	0	0
U364	TeCntr BasicGain	3	3	3	3
U366	TeCntr Time	3	3	3	3
U367	TeCntrDerivation	0	0	0	0
U393	Wobb Amplitude	0	0	0	0
U394	Wobb Freq	60	60	60	60
U395	Wobb Phase Shift	360	360	360	360
U396	Wobb P-Step	0	0	0	0
U397	Wobb P-Step	0	0	0	0
U398	Wobb Sampl Ratio	50	50	50	50

List of Binector Data Set parameters

List of BICO data set parameters Motion Control (BDS list)

07.11.01

Parameter number	Parameter name	Index 1	Index 2	Index 3	Index 4
P190	Src Pos Setp	310	310		
P192	Src SetV PosSet	0	0		
P193	Src Set PosSet	0	0		
P194	Src Pos ActV	120	120		
P196	Src SetV PosAct	0	0		
P197	Src Set PosAct	0	0		
P202	SrcPosRegLim	134	134		
P203	Src PosRegAdapt	1	1		
P209	Src PRE PosReg	312	312		
P210	Src 1 Rel PosReg	0	0		
P211	Src2 Rel PosReg	104	104		
P212	Src Ctrl Setp	311	311		
P213	Src Release Ctrl	305	305		
P220	Src n(set)	75	75		
P224	Src 1 n(set/act)	0	0		
P225	Src2 n(set/act)	150	150		
P226	Src3 n(set/act)	151	151		
P227	Src4 n(set/act)	0	0		
P228	Src n(Deviation)	152	152		
P232	Src n-Reg Adapt	0	0		
P241	Src SetV n-Reg1	0	0		
P242	Src Set n-Reg1	0	0		
P243	Src n-Reg1 STOP	0	0		
P245	Src Droop	0	0		
P248	Src DT1 Function	0	0		
P260	Src Torq (set)	153	153		
P261	Src Torq(conseq)	0	0		
P262	Src Torque(add)	0	0		
P265	Src Torq(Limit1)	170	170		
P266	Src Torq(Limit2)	171	171		
P267	Src Torque(add3)	0	0		
P270	Src I(sq,set)	166	166		
P271	Src I(sq,add)	0	0		
P275	Src I(max)	2	2		
P320	Src n(set,V/f)	0	0		
P321	Src n(add,V(f)	0	0		
P417	Src FSetp Bit2	0	0		
P418	Src FSetp Bit3	0	0		
P433	Src AddSetpoint1	0	0		
P438	Src AddSetpoint2	0	0		

Parameter number	Parameter name	Index 1	Index 2	Index 3	Index 4
P443	Src MainSetpoint	0	0		
P554	Src ON/OFF1	0	0		
P555	Src1 OFF2(coast)	1	20		
P556	Src2 OFF2(coast)	1	1		
P557	Src3 OFF2(coast)	1	1		
P558	Src1 OFF3(QStop)	1	1		
P559	Src2 OFF3(QStop	1	1		
P560	Src3 OFF3(QStop)	1	1		
P561	Src InvRelease	1	1		
P562	Src RampGen Rel	1	1		
P563	Src RampGen Stop	1	1		
P564	Src Setp Release	1	1		
P565	Src1 Fault Reset	2107	2107		
P566	Src2 Fault Reset	0	0		
P567	Src3 Fault Reset	0	18		
P568	Src Jog Bit0	0	0		
P569	Src Jog Bit1	0	0		
P571	Src FWD Speed	1	1		
P572	Src REV Speed	1	1		
P573	Src MOP UP	0	0		
P574	Src MOP Down	0	0		
P575	Src No ExtFault1	1	1		
P576	Src FuncDSetBit0	0	0		
P577	Src FuncDSetBit1	0	0		
P580	Src FixSetp Bit0	0	16		
P581	Src FixSetp Bit1	0	0		
P583	Src Fly Release	0	0		
P584	Src Droop Rel	0	0		
P585	Src n-Reg Rel	1	1		
P586	Src No ExtFault2	1	1		
P587	Src Master/Slave	0	0		
P588	Src No Ext Warn1	1	1		
P589	Src No Ext Warn2	1	1		
P591	Src ContactorMsg	0			
P601 not Compact PLUS	Src DigOutMCon	270	270		
P640	Src AnaOut	0	0		
P647	Conf DigIn4	0	0		
P648	Conf DigIn5	0	0		
P651	Src DigOut1	0	0		
P652	Src DigOut2	0	0		
P653	Src DigOut3	0	0		
P654	Src DigOut4	0	0		
U214	Src n(FrictChar)	0	0		

Parameter number	Parameter name	Index 1	Index 2	Index 3	Index 4
U218	Src FricCharON	0	0		
U219	SrcPlotFricChar	0	0		
U373	SrcJ_Ext	0	0		
U374	SrcAccPre	0	0		
U375	Src T FixVal	0	0		
U376	Src Select J	0	0		
U377	Src Sel Acc T	0	0		
U385	Src T (total1)	0	0		
U386	Src T (total2)	0	0		
U387	Src T (total3)	0	0		

List of Binector and Connector parameters

List of binector and connector parameters
Motion Control

07.11.01

Parameter number	Parameter name	Index 1	Index 2	Index 3	Index 4
P030	Src Disp Binec	0	0	0	0
P032	Src Disp Conn	0	0	0	0
P034	SrcDispVoltsConn	0	0	0	0
P036	SrcDispAmpsConn	0	0	0	0
P038	Src DispTorqConn	0	0	0	0
P040	SrcDisp SpdConn	0	0	0	0
P042	SrcDispFreqConn	0	0	0	0
P044	SrcDisp DecConn	0	0	0	0
P046	SrcDisp HexConn	0	0	0	0
P134	Config.Resolver	1			
P139	ConfSetpEnc	0			
P142	EncoderMonitSBM2	1011	1	11	11
P149	Conf Protocol	101	25	0	0
P150	SBP Config	0	0		
P155	SrcPosSetVMEncod	0	0		
P156	SrcSetPosMEncod	0	0		
P157	SrcPosCorrVMEnc	0	0		
P158	SrcCorrPosMEnc	0	0	0	0
P159	SrcRefSetVMEnc	0	0		
P160	SrcRelRefMEncod	0	0		
P162	SrcRelMVlMemMEnc	0	0		
P166	ConfPosSensMEnc	0	0		
P167	SrcPosOffsetMEnc	0	0		
P172	Src Pos SetV	0			
P173	Src Set Position	302			
P174	Src PosCorr'nV	0			
P175	Src Pos Corr'n	303	304		
P176	Src Ref SetV	0			
P177	Src Release Ref	307			
P178	Src Rough Pulse	0			
P179	SrcRelMValVolts	308			
P182	Src Angle Pos	90			
P183	Conf Pos Sensing	11	0		
P184	Src Pos Offset	0			
P222	Src n(act)	91			
P244	Q.Speed ext.	0			
P252	Src Band-Stop	0			
P292	Src Flux (set)	180			
P323	Src Add Boost	202			
P324	Src Rel AddBoost	0			

Parameter number	Parameter name	Index 1	Index 2	Index 3	Index 4
P330	Src Select Curve	0			
P358	Key	0	0		
P359	Lock	0	0		
P363	Copy BICO DSet	0			
P364	Copy FuncDSet	0			
P423	Src MOP inv.	0			
P425	Conf MOP	110			
P427	Src Set MOP	0			
P428	Src SetV MOP	0			
P429	Src Auto Setp	0			
P430	Src Manual/Auto	0			
P549	Q.PosTest	0			
P590	Src BICO DSet	0			
P608	Src BrakeOpen	104	1		
P609	Src BrakeClose	105	0	0	0
P610	Src BrakeThresh1	242			
P612	Src SigBrakeOp	1			
P613	Src SigBrakeClos	0			
P614	Src PBrakeClos	0			
P615	Src BrakeThresh2	91			
P633	Src AnaIn Invert	0			
P636	Src AnaIn Rel	1			
P645	Src Conf DigIn4	1	0		
P649	Src Conf DigIn5	1	0		
P659	EB1SrcAnaIn inv.	0	0	0	0
P661	EB1 SrcAnaInRel	1	1	1	1
P663	EB1 SrcAnaOut	0	0	0	0
P669	EB1 Src DigOut	0	0	0	0
P674	EB2 Src RelayOut	0	0	0	0
P679	EB2 Src AnaInInv	0	0		
P681	EB2 Src AnaInRel	1	1		
P683	EB2 Src AnaOut	0	0		
P693 not Compact PLUS	SCI AnaOut ActV	0	0	0	0
P698 not Compact PLUS	Src SCI DigOut	0	0	0	0
P706 not Compact PLUS	Src SCB TrnsData	0	0	0	0
P707	SrcSCom1TrnsData	32	0	0	0
P708 not Compact PLUS	SrcSCom2TrnsData	0	0	0	0
P734	SrcCB/TBTrnsData	32	0	0	0
P736	Src CB2 TrnsData	32	0	0	0
P744	Src SYNC Sel	0	0		
P747	SrcSLBAppl.Flags	0	0	0	0
P751	SrcSLBTrnsData	0	0	0	0

Parameter number	Parameter name	Index 1	Index 2	Index 3	Index 4
P753	SrcSyncTimeCount	0			
P755	SIMOLINK Conf	0			
P756	SrSLB_Specialdat	0	0	0	0
P772	SrcEnRGenByp	1			
P777	Q.DiagnosticVals	0	0		
P790	Src Setp	150			
P791	Src ActV	91			
P795	Src Comp ActV	91			
P799	Src OFF ActV	91			
P802	Src Speed Setp	150			
P803	Src Speed ActV	91			
P807	Q.LZ.Receive.Val	0			
P808	Q.LZ.Receive.Res	0			
P811	Q.LZRec.F152 EN	1			
P839	AdrConnector	0	0	0	0
U019	Src SH1 KK	0	0	0	0
U020	Src SH1 K	0	0	0	0
U029	Src SH2 KK	0	0	0	0
U030	Src SH2 K	0	0	0	0
U031	Src Conn Disp 1	0			
U033	Src Conn Disp 2	0			
U035	Src Conn Disp 3	0			
U037	Src DConn Disp 1	0			
U039	Src DConn Disp 2	0			
U041	Src DConn Disp 3	0			
U043	Src DConn Disp 4	0			
U045	Src Bin Disp 1	0			
U047	Src Bin Disp 2	0			
U049	Src Bin Disp 3	0			
U051	Src Bin Disp 4	0			
U053	SrcConnDispSmth	0			
U055	SrcDConnDispSmth	0			
U057	SrcBin/Con Conv4	0	0	0	0
U059	Src SH1 B	0	0	0	0
U061	Src Fault F148	0			
U062	Src Fault F149	0			
U063	Src Fault F150	0			
U064	Src Fault F151	0			
U065	Src Warning A061	0			
U066	Src Warning A062	0			
U067	Src Warning A063	0			
U068	Src Warning A064	0			
U070	Src Conn/DConnC	0	0	0	0

Parameter number	Parameter name	Index 1	Index 2	Index 3	Index 4
U071	Src DConn/ConnC	0	0	0	
U072	Src Conn/BinC	0	0	0	
U076	Src Bin/ConnC1	0	0	0	0
U078	Src Bin/ConnC2	0	0	0	0
U080	Src Bin/ConnC3	0	0	0	0
U082	Src Conn Add 1	0	0		
U083	Src Conn Add 2	0	0		
U084	Src Conn Add 3	0	0		
U085	Src Conn Add 4	0	0		
U086	Src Conn Add 5	0	0	0	0
U087	Src ConnSub1	0	0		
U088	Src ConnSub2	0	0		
U089	Src ConnSub3	0	0		
U090	Src DConnAdd 1	0	0		
U091	Src DConnAdd 2	0	0		
U092	Src DConnAdd 3	0	0		
U093	Src DConnAdd 4	0	0		
U094	Src DConnSub1	0	0		
U095	Src DConnSub2	0	0		
U096	Src ConnM A/S	0	0	0	
U097	Src DConnM A/S	0	0	0	
U098	Src Conn Inv1	0			
U099	Src Conn Inv2	0			
U100	Src Conn Inv3	0			
U101	Src DConn Inv 1	0			
U102	Src DConn Inv 2	0			
U103	Src1 Conn SwInv	0			
U104	Src2 Conn SwInv	0			
U105	Src1 DConnSwInv	0			
U106	Src2 DConnSwInv	0			
U107	Src Conn Mult1	0	0		
U108	Src Conn Mult2	0	0		
U109	Src Conn Mult3	0	0		
U110	Src DConn Mult	0	0		
U111	Src Conn Div1	0	0		
U112	Src Conn Div2	0	0		
U113	SrcDConn Div	0	0		
U114	SrcConnMult/Div1	0	0	0	
U115	SrcConnMult/Div2	0	0	0	
U116	SrcConnMult/Div3	0	0	0	
U117	Src ConnAbsV1	0			
U120	Src ConnAbsV2	0			
U123	Src ConnAbsV3	0			

Parameter number	Parameter name	Index 1	Index 2	Index 3	Index 4
U126	SrcDConnAbsV	0			
U130	Src ConnLimitr1	503	0	502	
U132	Src ConnLimitr2	506	0	505	
U134	SrcDConnLimitr	509	0	508	
U136	SrcConnLmtMon1	0	511		
U141	SrcConnLmtMon2	0	513		
U146	SrcDConnLmtMon1	0	515		
U151	SrcDConnLmtMon2	0	517		
U154	Src Cam 1/2	0			
U160	Src Cam 3/4	0			
U166	Src1 ConnCh1	0			
U167	Src2 ConnCh1	0	0		
U168	Src1 ConnCh2	0			
U169	Src2 ConnCh2	0	0		
U170	Src1 ConnCh3	0			
U171	Src2 ConnCh3	0	0		
U172	Src1 ConnCh4	0			
U173	Src2 ConnCh4	0	0		
U174	Src1 ConnCh5	0			
U175	Src2 ConnCh5	0	0		
U176	Src1DconnCh1	0			
U177	Src2DConnCh1	0	0		
U178	Src1DConnCh2	0			
U179	Src2DConnCh2	0	0		
U180	Src1DConnCh3	0			
U181	Src2DConnCh3	0	0		
U182	Src1DConnCh4				
U183	Src2DConnCh4	0	0		
U184	Src1DConnCh5	0			
U185	Src2DConnCh5	0	0		
U186	Src1 Multiplex	0	0	0	1
U187	Src 2 Multiplex	0	0	0	0
U188	Src1 Demultiplex	0	0	0	1
U189	Src2 Demultiplex	0			
U190	Src Char1	0			
U193	Src Char2	0			
U196	Src Char3	0			
U199	Src DeadZone	0			
U201	SrcMaxSel	0	0	0	
U202	SrcMinSel	0	0	0	
U203	Src1 Tra/Stor1	0	0	0	
U204	Src2 Tra/Stor1	0			
U206	Src1 Tra/Stor2	0	0	0	

Parameter number	Parameter name	Index 1	Index 2	Index 3	Index 4
U207	Src2 Tra/Stor2	0			
U209	Src1 Store 1	0			
U210	Src2 Store 1	0			
U211	Src1 Store 2	0			
U212	Src2 Store 2	0			
U221	Src AND1	1	1	1	
U222	Src AND2	1	1	1	
U223	Src AND3	1	1	1	
U224	Src AND4	1	1	1	
U225	Src AND5	1	1	1	
U226	Src AND6	1	1	1	
U227	Src AND7	1	1	1	
U228	Src AND8	1	1	1	
U229	Src AND9	1	1	1	
U230	Src AND10	1	1	1	
U231	Src AND11	1	1	1	
U232	Src AND12	1	1	1	
U233	Src AND13	1	1	1	
U234	Src AND14	1	1	1	
U235	Src AND15	1	1	1	
U236	Src AND16	1	1	1	
U237	Src AND17	1	1	1	
U238	Src AND18	1	1	1	
U239	Src OR1	0	0	0	
U240	Src OR2	0	0	0	
U241	Src OR3	0	0	0	
U242	Src OR4	0	0	0	
U243	Src OR5	0	0	0	
U244	Src OR6	0	0	0	
U245	Src OR7	0	0	0	
U246	Src OR8	0	0	0	
U247	Src OR9	0	0	0	
U248	Src OR10	0	0	0	
U249	Src OR11	0	0	0	
U250	Src OR12	0	0	0	
U251	Src BinInv1	0			
U252	Src BinInv2	0			
U253	Src BinInv3	0			
U254	Src BinInv4	0			
U255	Src BinInv5	0			
U256	Src BinInv6	0			
U257	Src BinInv7	0			
U258	Src BinInv8	0			

Parameter number	Parameter name	Index 1	Index 2	Index 3	Index 4
U259	Src BinInv9	0			
U260	Src BinInv10	0			
U261	Src NAND1	0	0	0	
U262	Src NAND2	0	0	0	
U263	Src NAND3	0	0	0	
U264	Src NAND4	0	0	0	
U265	Src NAND5	0	0	0	
U266	Src NAND6	0	0	0	
U267	Src NAND7	0	0	0	
U268	Src NAND8	0	0	0	
U269	Src SH2 B	0	0	0	0
U271	Src BinCh1	0	0	0	
U272	Src BinCh2	0	0	0	
U273	Src BinCh3	0	0	0	
U274	Src BinCh4	0	0	0	
U275	Src BinCh5	0	0	0	
U276	Src EXOR1	0	0		
U277	Src EXOR2	0	0		
U278	Src EXOR3	0	0		
U279	Src D-FlipFlop1	0	0	0	0
U280	Src D-FlipFlop2	0	0	0	0
U281	Src RS-FlipFlop1	0	0		
U282	Src RS-FlipFlop2	0	0		
U283	Src RS-FlipFlop3	0	0		
U284	Src RS-FlipFlop4	0	0		
U285	Src RS-FlipFlop5	0	0		
U286	Src RS-FlipFlop6	0	0		
U287	Src RS-FlipFlop7	0	0		
U288	Src RS-FlipFlop8	0	0		
U289	Src RS-FlipFlop9	0	0		
U290	SrcRS-FlipFlop10	0	0		
U291	SrcRS-FlipFlop11	0	0		
U292	SrcRS-FlipFlop12	0	0		
U293	Src Timer1	0			
U296	Src Timer2	0			
U299	Src Timer3	0			
U302	Src Timer4	0			
U305	Src Timer5	0			
U308	Src Timer6	0			
U311	Src1 Timer7	0			
U312	Src2 Timer7	1			
U316	Src ParamCounter	561	562	563	564
U317	Src Bin Counter	0	0	0	0

Parameter number	Parameter name	Index 1	Index 2	Index 3	Index 4
U320	SrcComfRGen In	0			
U321	SrcComfRGen Stop	0			
U322	SrcComfRGen SD	0			
U323	SrcComfRGenSetV	0			
U324	Src Set ComfRGen	0			
U325	Src Rel ComfRGen	1			
U328	SrcComfRGenBridg	0			
U329	SrcComfRGenAdap	1			
U338	SrcComfRGen QS	0			
U343	SrcComfRGenPosL	573			
U344	SrcComfRGenNegL	574			
U345	Src FDS.CoRFG	92	93		
U346	Src SH3 KK	0	0	0	0
U347	Src SH3 K	0	0	0	0
U348	Src SH3 B	0	0	0	0
U350	Src TeCntr Rel	0			
U352	Src TeCntr Setp	0			
U355	Src TeCntr ActV	0			
U360	SrcTeCntr I Set	556			
U361	Src TeCntr ISetV	0			
U362	Src TeCntr Droop	0			
U363	Src TeCntrGainAd	1			
U368	Src TeCntr PRE	0			
U370	Src TeCntrOutLim	586	587		
U380	Src SimpRGen In	0			
U381	Src Set SimpRGen	0			
U382	Src SetVSimpRGen	0			
U390	SrcWobbSetp Unwo	0			
U391	Src Wobb SyncInp	0			
U392	Src Wobb Rel	0			
U400	SrcConnAnaDel_1	0			
U402	SrcConnAnaDE_2	0			
U404	SrcSampTChange	0	0	0	0
U405	SrcMulDiv32_1_32	0			
U406	SrcMulDiv32_1_16	0	0		
U407	SrcPulsGen Tp	613			
U408	Src Integr32_1	0	0	0	0
U409	Src Integr32_1_t	611			
U410	Src Integr32_1_s	0			
U411	Src Integr32_2	0	0	0	0
U412	Src Integr32_2_t	612			
U413	Src Integr32_2_s	0			
U414	Src PT1Gl32_1	0			

Parameter number	Parameter name	Index 1	Index 2	Index 3	Index 4
U416	SrcPT1Elem32_1_s	0			
U417	Src PT1Elem32_2	0			
U419	Src PT1El32_2_s	0			
U420	Src DElem32_1	0			
U422	Src Inputs RM	0	0	0	
U426	Src Set RM	0			
U429	Src Inputs VM	0	0		
U432	Src Set VM	0			
U438	Src ConnToPar #	479	479	479	479
U439	SrcConnToPar Ind	480	480	480	480
U441	Src P-Amplifier	0	0		
U443	Src Shift32	0	0	0	0
U444	Src ConnToPar V	0	0	0	0
U447	SrcConnToPar Trg	0	0	0	0
U448	SrcConnToParEEPR	0	0	0	0
U449	SrcParToConnRd	0	0	0	0
U451	Src MastV Corr	0	0	0	0
U452	CW MastVCorr	0	0	0	0
U453	Offset Corr	826			
U454	SpeedAdj MastV	1			
U458	FuncSelec MastV	0			
U460	Src.AddDispl M	0	0		
U461	Src AddDispl S	0	0		
U463	Q.Gl.RLEnable	1	1		
U464	Q.Gl.EnableSet	1	811		
U468	PosCorrVFactor	1			
U469	Q.EHlEncoder2 LU	0	0	856	
U470	Q.EHlEncoder2 S	0	0	0	0
U475	Conf Eng/Diseng	0			
U480	SrcTraceInput	0	0	0	0
U483	SrcTriggerInput	0	0	0	0
U489	SrcBTriggerInput	0	0	0	0
U509	MDI Set Connect	0			
U512	Q.RoundingSetup	0			
U528	Q.Encoder Select	0			
U529	Src PosActV ok	70			
U530	Src CtrlSignals	860			
U531	Src GFuncMDI	0			
U532	Src Position MDI	0			
U533	Src Speed MDI	0			
U534	Src PosVarMDI	0			
U535	Src PosActV	0	0		
U536	SrcQuickInp	0	0	0	16

Parameter number	Parameter name	Index 1	Index 2	Index 3	Index 4
U537	Src TechInputs.P	0	210	0	
U538	SrcMVal Valid	212			
U539	Src Mvalue	0			
U600	Src RecomV Sync	7031	0	817	0
U605	Src GearFactor	804	805		
U609	SrcOffsetClutchP	822	0		
U612	SrcRelStart/Stop	0	0	0	
U614	OperMode TabSync	0			
U615	TableConfig	1			
U616	Mode Table	0			
U618	X-SetV Tab	823			
U619	Src Set Tab	0			
U621	Src Tab Sync	0			
U624	Src Scale X-Axis	806	807		
U625	Src CW	0	0	1	0
U626	Src Setp	802	0	801	
U650	SrcSelTable	0	0	0	
U652	Src Scale Y-Axis	808	809		
U656	SrcOperModeSync	804	805		
U657	SrcFuncSync	806	807		
U663	Src SetPos var.	0			
U665	SrcActPos PosCo	0			
U666	SrcStartPosCorr	0			
U669	TG ReserveCon1	0	0		
U671	Src SetV Outp	120			
U672	Set_DispAngle	0			
U673	Src Set Outp	0			
U674	Src Rel Sync	220			
U675	Rel_Correction	824	825	0	
U676	MastSetpSync	0			
U678	DisplaceAngle	813	0	814	
U680	Src SpdSetp VMAx	818			
U681	Src V set % VMAx	0			
U684	Src CtrlSig VMAx	0	1	0	
U686	Src SetV VMAx	819			
U689	Src Rel VMAx	1			
U694	Adjust_DispAngle	0	0		
U696	DispAngle+	0	0		
U698	OffstCorrVFactor	1	1		
U709	SrcOverride P	859			
U710	Src PosCntrSig	0	0	0	0
U789	Q.Multiplexer 2	0	0	0	1
U790	Q.Multiplexer 2	0	0	0	0

Parameter number	Parameter name	Index 1	Index 2	Index 3	Index 4
U791	Q.Multiplexer 3	0	0	0	1
U792	Q.Multiplexer 3	0	0	0	0
U793	Q.Multiplexer 4	0	0	0	1
U794	Q.Multiplexer 4	0	0	0	0
U796	Q.CoPosTrackEx	0	0		
U797	Q.BiPosTrackEx	0	0		
U800	Q.Setpt.Extrapol	0	0		
U801	Q.Expol.Error	0			
U803	Q.SL-Encoder	0	0	0	0
U804	Q.SL Encoder act	0			
U811	Q.KoPosTrackMo	0	0		
U812	Q.BiPosTrackMo	0	0		
U815	Q.EHlEncoder1 LU	0	0	853	
U816	Q.EHlEncoder1 S	0	0	0	0
U819	Q.AddDispEnable	1			
U821	Q.Add.DisplAngle	0	0		
U822	Src AddDisplTrig	0	0		
U824	Src AddDispV-fac	1			
U827	Set_DispAngle	0			
U828	Q.DisplAdd	0	0	0	0
U831	Q.DisplAdd_2	0	0	0	0
U834	Q.DisplAdd_3	0	0	0	0
U838	Q.Sel.abg. Uzk	0			
U842	Q.32BGear1 Setp	0	0	0	
U843	Q.32BGear 1 Trig	0			
U844	Q.32BGear1 Fact	0	0		
U847	Q.32BGear 2 Setp	0	0	0	
U848	Q.32BGear 2 Trig	0			
U849	Q.32BGear 2 Fact	0	0		
U850	Q.EPos POS	875	883	120	120
U851	Q.EPos V-Max	874			
U852	Q.EPos A-Max	872	873		
U853	Q.EPos STW SETUP	875	876	873	
U854	Q.EPos STW POS	872	874		
U855	Q.EPos Set	0	870		
U863	Q.EPos ExtPOSOK	1	888	210	
U866	Q.EPos STW SET	220	878	879	880
U867	Q.EPos SET POS	879			
U868	Q.EPosSET V-Max	876			
U869	Q.EPosSET A-Max	877	878		
U875	EPos FBin STW	0	0	0	0
U876	Q.EPos REF V-IN	870			
U877	Q.EPos REF POS	871	120	880	122

Parameter number	Parameter name	Index 1	Index 2	Index 3	Index 4
U878	Q.EPos STW REF	0	870	212	871
U881	Q.EPos Pt1 Adapt	1			
U882	Reset SET-SETP	1			
U921	DP V3 Gx_STW	0	0		
U922	DP V3 Enc ActV	0	0	0	0
U923	DP V3 E Feedback	210	215	212	217
U976	FID	0	0		
U977	PIN	0	0		

Faults and Alarms

Faults

General information regarding faults

For each fault, the following information is available:

Parameter	r947	Fault number
	r949	Fault value
	r951	Fault list
	P952	Number of faults
	r782	Fault time

If a fault message is not reset before the electronic supply voltage is switched off, then the fault message will be present again when the electronic supply is switched on again. The unit cannot be operated without resetting the fault message.

Number / Fault	Cause	Counter-measure
F001 Main contactor checkback	The monitoring time of the main contactor checkback (P600) has expired.	- Check main contactor checkback - Clear main contactor checkback (P591.B = 0) - Increase monitoring time (P600)
F002 Pre-charging fault	The monitoring time of pre-charging has expired, i.e. the DC link voltage has not reached the setpoint within 3 secs.	- Check voltage connection (AC or DC) - Compare value in P070 and unit MLFB
F006 DC link overvoltage	Due to excessive DC link voltage, shutdown has occurred. The rated value of the shutdown threshold is 819 V. Due to component tolerances shutdown can take place in the range from 803 V to 835 V.	Check the line voltage (AC-AC) or the input direct voltage (DC-AC). Compare value with P071 (Line Volts)
F008 DC link undervoltage	The lower limit value of 76 % of the DC link voltage has been fallen short of.	- check the line voltage (AC-AC) or the input direct voltage (DC-AC). Compare value with P071 (Line Volts) - check input rectifier (AC-AC) - check DC link
F011 Overcurrent	Overcurrent shutdown has occurred. The shutdown threshold has been exceeded. The phase in which an overcurrent has occurred is indicated in a bit-coded manner in the fault value (see P949). Phase U --> Bit 0 = 1--> fault value = 1 Phase V --> Bit 1 = 1--> fault value = 2 Phase W--> Bit 2 = 1--> fault value = 4 If an overcurrent occurs simultaneously in several phases, the total of the fault values of the phases concerned is the resulting fault value.	- Check the converter output for short-circuit or earth fault - Check the load for an overload condition - Check whether motor and converter are correctly matched - Check whether the dynamic requirements are too high

Number / Fault	Cause	Counter-measure
F015 Motor blocked	Motor is blocked/overloaded (current control), or has stalled (v/f characteristic): Static load is too high The fault is not generated until after the time entered in P805. Binector B0156 is set, in status word 2 r553 Bit 28. Whether the drive is blocked or not can be detected at P792 (Perm Deviation) and P794. P806 enables detection to be limited to "at standstill" (P806 = 1, only for current control) or to be completely de-activated (P806 = 2). In the case of current control, the precondition for this fault is that the torque limits (B0234) have been reached. In the case of slave drive, detection is de-activated. In the case of v/f control, the I(max) controller must be active.	- Reduce the load - Release the brake - Increase current limits - Increase P805 Blocking Time - Increase the response threshold for the permissible deviation P792 - Increase torque limits or torque setpoint v/f characteristic only: - Reduce rate of acceleration - Check characteristic setting.
F017 SAFE STOP	SAFE STOP operating or failure of the 24 V power supply during operation (only for Compact PLUS units)	Jumper applied for SAFE STOP? SAFE STOP checkback connected? On Compact PLUS units: check 24 V supply
F020 Excess temperature of motor	The motor temperature limit value has been exceeded. r949 = 1 Motor temperature limit value exceeded r949 = 2 Short-circuit in the motor temperature sensor cable or sensor defective r949 = 4 Wire break of motor temperature sensor cable or sensor defective	- Temperature threshold adjustable in P381! - P131 = 0 -> fault de-activated - Check the motor (load, ventilation etc.) - The current motor temperature can be read in r009 (Motor Temperat.) - Check the sensor for cable break, short-circuit
F021 Motor I2t	Parameterized limit value of the I2t monitoring for the motor (P384.002) has been exceeded	Check: Thermal time constant of motor P383 Mot ThermT-Const or motor I2t load limit P384.002. The I2t monitoring for the motor is automatically activated if P383 >=100s (=factory setting) and P381 > 220°C is set. Monitoring can be switched off by setting a value <100s in P383.
F023 Excess temperature of inverter	The limit value of the inverter temperature has been exceeded	- Measure the air intake and ambient temperature (Observe minimum and maximum ambient temperature!) - Observe the derating curves at theta > 45 °C (Compact PLUS) or 40 °C - Check whether the fan is running - Check that the air entry and discharge openings are not restricted - On Compact PLUS units: ≥ 22 kW acknowledgement is only possible after 1 minute

Number / Fault	Cause	Counter-measure
F025 UCE upper switch/UCE Phase L1	UCE upper switch (Compact PLUS) / UCE Phase L1 (chassis-type unit)	- Check the converter outputs for earth fault - Check the switch for "Safe STOP" on Compact units
F026 UCE lower switch/UCE Phase L2	UCE lower switch (Compact PLUS) / UCE Phase L2 (Compact, chassis)	- Check the converter outputs for earth fault - Check the switch for "Safe STOP" on Compact units
F027 Pulse resistor fault / UCE Phase L3	Pulse resistance fault (only Compact PLUS) / UCE Phase L3 (chassis)	- Check the converter outputs for earth fault - Check the switch for "Safe STOP" on Compact DC/DC units and chassis units with the Option "Safe STOP"
F029 Meas. value sensing Compact PLUS only	A fault has occurred in the measured value sensing system: - (r949 = 1) Offset adjustment in phase L1 not possible - (r949 = 2) Offset adjustment in phase L3 not possible. - (r949 = 3) Offset adjustment in phases L1 and L3 not possible. - (r949=65) Autom. Adjustment of the analog inputs is not possible	Fault in measured value sensing Fault in power section (valve cannot block) Fault on CU
F035 External fault 1	Parameterizable external fault input 1 has been activated.	- Check whether there is an external fault - Check whether the cable to the corresponding digital output is interrupted - P575 (Src No ExtFault1)
F036 External fault 2	Parameterizable external fault input 2 has been activated.	- Check whether there is an external fault - Check whether the cable to the corresponding digital output is interrupted - P576 (Src No ExtFault2)
F038 Voltage OFF during parameter storage	A voltage failure has occurred during a parameter task.	Re-enter the parameter. The number of the parameter concerned is indicated in fault value r949.
F040 Internal fault of sequence control	Incorrect operating status	Replace the control board (CUMC) or the unit (Compact PUS).
F041 EEPROM fault	A fault has occurred during the storage of values in the EEPROM.	Replace the control board (CUMC) or the unit (Compact PLUS)
F042 Time slot overflow	The available calculating time of the time slot has been exceeded.	- Reduce pulse frequency - Calculate individual blocks in a slower sampling time - The technology functions synchronization (U953.33) and positioning (U953.32) must not be enabled at the same time.

Number / Fault	Cause	Counter-measure
F043 DSP link	The link to the internal signal processor is interrupted	- Reduce pulse frequency (perhaps caused by calculating time overflow) - If fault re-occurs, replace the board/unit The pulse frequency should not be adjusted to values larger than 7.5 kHz (for 60MHz - DSP) or 6 kHz (for 40MHz - DSP). If higher values are set, indices 12 to 19 have to be checked on visualization parameter r829. The indicated free calculating time of the DSP time slots always have to be greater than zero. If the calculating time is exceeded, this is also displayed by fault F043 (DSP coupling). Remedy: Reduce pulse frequency P340.
F044 BICO manager fault	A fault has occurred in the softwiring of binectors and connectors	Fault value r949: >1000: Fault during connector softwiring >2000: Fault during binector softwiring - Voltage OFF and ON - Factory setting and new parameterization - Exchange the board 1028:Link memory is full. The link area between the two processors is full. No further connectors can be transferred. - Reduction of the linked connections between the two processors. Interface between the two processors is position control/setpoint conditioning i.e.softwires from and to the setpoint conditioning, position controller, speed controller, torque interface and current controller which are not necessary should be dissolved to reduce the link (value 0).
F045 HW fault on optional boards	A hardware fault has occurred during access to an optional board.	- Replace CU board (Compact, chassis units) - Replace the unit (Compact PLUS) - Check the connection betewen the subrack and the optional boards - Replace optional boards.
F046 Parameter coupling fault	A fault has occurred during the transfer of parameters to the DSP.	If fault re-occurs, replace the board/unit

Number / Fault	Cause	Counter-measure
F051 Encoder fault	- Signal amplitude of resolver or encoder is below the tolerance threshold - Power supply faults in the case of encoders and multiturn encoders - In the case of multiturn encoders (SSI/Endat), connection fault of the serial protocol	Fault value r949: 10th and 1st position: 9 = Resolver signal missing (sin/cos track) 20: Position error: Alarm A18 was pending during change to "RUN" status (see 29 for remedy) 21: A/B track undervoltage: root(A^2+B^2) < 0.01 Volts (see 29 for remedy) 22: A/B track undervoltage: root(A^2+B^2) >1.45 Volts (see 29 for remedy) 25 = Encoder initial position not recognized (C/D track missing) - Check encoder cable (faulty / interrupted)? - Correct encoder type parameterized? - Is the correct cable used for encoder or multiturn encoder? Encoders and multiturn encoders need different cables! - Encoder faulty? 26 = Encoder zero pulse outside the permitted range 27 = No encoder zero pulse has occurred 28 = Voltage supply Encoder fault - Short-circuit in encoder connection? - Encoder faulty? - Encoder incorrectly connected up? !!!Power off/on or in drive settings and back to new initialization of the starting position!!! 29 = Encoder/ multiturn encoder signal is missing (A/B track missing) - Check encoder cable (faulty/torn off)? - Is shield of encoder cable connected ? - Encoder faulty? - Replace SBR/SBM - Replace unit or basic board - Is the correct cable being used in each case for the encoder/multiturn encoder?`Encoders and multiturn encoders require different encoder cables! !!!Power off/on or in drive settings and back to new initialization of the starting position!!! Multiturn (SSI/EnDat): 30: Protocol fault CRC/Parity Check 31: Timeout Protocol (EnDat) 32: No-load level error, data line (SSI/EnDat) 33: Initialization of timeout - Check parameterization (P149) - Check encoder cable (faulty / torn off? - Encoder cable shield connected ? - Encoder faulty? - Replace SBR/SBM - Replace unit or basic board 34: Address wrong (only EnDat) Writing or reading of parameters not successful, check address and MRS code (P149)

Number / Fault	Cause	Counter-measure
		40: Alarm, lighting, EnDat encoder 41: Alarm, signal amplitude, EnDat encoder 42: Alarm. position value, EnDat encoder 43: Alarm, overvoltage, EnDat encoder 44: Alarm, undervoltage, EnDat encoder 45: Alarm, overcurrent, EnDat encoder 46: Alarm, battery failure, EnDat encoder 49: Alarm, check sum error, EnDat encoder 60: SSI protocol faulty (see P143) 100th position: 0xx: Motor encoder faulty 1xx: External encoder faulty 1000th position: (from V1.50) 1xxx: Frequency exceeded, EnDat encoder 2xxx: Temperature, EnDat encoder 3xxx: Control reserve, light, EnDat encoder 4xxx: Battery charge, EnDat encoder 5xxx: Home point not reached
F053 Parameter fault in follow-up task	After changes have been made to parameters, a fault has occurred during the calculation of dependent parameters.	No remedy
F054 Encoder board initialization fault	A fault has occurred during initialization of the encoder board.	Fault value r949: 1: Board code is incorrect 2: TSY not compatible 3: SBP not compatible 4: SBR not compatible 5: SBM not compatible 6: SBM initialization timeout 7: Board double 20: TSY board double 21: SBR board double 23: SB board three-fold 24: SBP board three-fold 30: SBR board slot incorrect 31: SBM board slot incorrect 32: SBP board slot incorrect 40: SBR board not present 41: SBM board not present 42: SBP board not present 50: Three encoder boards or two encoder boards, no one on Slot C 60: internal fault
F056 SIMOLINK telegram failure	Communication on the SIMOLINK ring is disturbed.	- Check the fiber-optic cable ring - Check whether an SLB in the ring is without voltage - Check whether an SLB in the ring is faulty - Check P741 (SLB TlgOFF)
F058 Parameter fault Parameter task	A fault has occurred during the processing of a parameter task.	No remedy
F059 Parameter fault after factory setting/init.	A fault has occurred in the initialization phase during the calculation of a parameter.	The number of the inconsistent parameter is indicated in fault value r949. Correct this parameter (ALL indices) and switch voltage off and on again. Several parameters may be affected, i.e. repeat process.

Number / Fault	Cause	Counter-measure
F060 MLFB is missing during initial loading	Is set if parameter P070 is at zero when INITIAL LOADING is exited.	Enter correct MLFB after acknowledging the fault (power section, initial loading)
F061 Incorrect parameterization	A parameter which has been entered during drive setting is in the non-permissible range.	The number of the inconsistent parameter is indicated in fault value r949 (e.g. motor enocder = pulse encoder in the case of brushless DC motors) -> correct this parameter.
F063 PIN is missing	The synchronization or positioning technology functions have been activated without an authorization being present (PIN)	- Deactivate synchronization or positioning - Enter the PIN (U2977) If technology functions are inserted in the time slots without enabling the technology function through the PIN, the message F063 is generated. This fault can only be cleared by putting in the correct PIN at U977.01 and U977.02 and switching the power off and on again, or by disabling the technology functions (put U953.32 = 20 and U053.33 = 20).
F065 SCom telegram failure	No telegram has been received at an SCom interface (SCom/USS protocol) within the telegram failure time.	Fault value r949: 1 = Interface 1 (SCom1) 2 = Interface 2 (SCom2) Check the connection of PMU -X300 or X103 / 27,28 (Compact, chassis unit) Check the connection of X103 or X100 / 35,36 (Compact PLUS unit) Check "SCom/SCB TlgOff" P704.01 (SCom1) or P704.02 (SCom2)
F070 SCB initialization fault	A fault has occurred during initialization of the SCB board.	Fault value r949: 1: Board code incorrect 2: SCB board not compatible 5: Error in configuration data 6: Initialization timeout 7: SCB board double 10: Channel error
F072 EB initialization fault	A fault has occurred during initialization of the EB board.	Fault value r949: 2: 1st EB1 not compatible 3: 2nd EB1 not compatible 4: 1st EB2 not compatible 5: 2nd EB2 not compatible 21: Three EB1 boards 22: Three EB2 boards 110: Fault on 1st EB1 120: Fault on 2nd EB1 210: Fault on 1st EB2 220: Fault on 2nd EB2
F073 AnInp1SL1 not Compact PLUS	4 mA at analog input 1, slave 1 fallen short of	Check the connection of the signal source to the SCI1 (slave 1) -X428: 4, 5.
F074 AnInp2 SL1 not Compact PLUS	4 mA at analog input 2, slave 1 fallen short of	Check the connection of the signal source to the SCI1 (slave 1) -X428: 7, 8.
F075 AnInp3 SL1 not Compact PLUS	4 mA at analog input 3, slave 1 fallen short of	Check the connection of the signal source to the SCI1 (slave 1) -X428: 10, 11.

Number / Fault	Cause	Counter-measure
F076 AnInp1 SL2 not Compact PLUS	4 mA at analog input 1, slave 2 fallen short of	Check the connection of the signal source to the SCI1 (slave 2) -X428: 4, 5.
F077 AnInp2 SL2 not Compact PLUS	4 mA at analog input 2, slave 2 fallen short of	Check the connection of the signal source to the SCI1 (slave 2) -X428: 7, 8.
F078 AnInp3 SL2 not Compact PLUS	4 mA at analog input 3, slave 2 fallen short of	Check the connection of the signal source to the SCI1 (slave 2) -X428: 10, 11.
F079 SCB telegram failure not Compact PLUS	No telegram has been received by the SCB (USS, peer-to-peer, SCI) within the telegram failure time.	- Check the connections of the SCB1(2). - Check P704.03"SCom/SCB Tlg OFF" - Replce SCB1(2) - Replace CU (-A10)
F080 TB/CB initialization fault	Fault during initialization of the board at the DPR interface	Fault value r949: 1: Board code incorrect 2: TB/CB board not compatible 3: CB board not compatible 5: Error in configuration data 6: Initialization timeout 7: TB/CB board double 10: Channel error Check the T300/CB board for correct contacting, check the PSU power supply, check the CU / CB / T boards and check the CB initialization parameters: - P918.01 CB Bus Address, - P711.01 to P721.01 CB parameters 1 to 11
F081 OptBrdHeartbeat-Counter	Heartbeat-counter of the optional board is no longer being processed	Fault value r949: 0: TB/CB heatbeat-counter 1: SCB heartbeat-counter 2: Additional CB heartbeat-counter - Acknowledge the fault (whereby automatic reset is carried out) - If the fault re-occurs, replace the board concerned (see fault value) - Replace ADB - Check the connection between the subrack and the optional boards (LBA) and replace, if necessary
F082 TB/CB telegram failure	No new process data have been received by the TB or the CB within the telegram failure time.	Fault value r949: 1 = TB/CB 2 = additional CB - Check the connection to TB/CB - Check P722 (CB/TB TlgOFF) - Replace CB or TB

Number / Fault	Cause	Counter-measure
F085 Add. CB initialization fault	A fault has occurred during initialization of the CB board.	Fault value r949: 1: Board code incorrect 2: TB/CB board not compatible 3: CB board not compatible 5: Error in configuration data 6: Initialization timeout 7: TB/CB board double 10: Channel error Check the T300 / CB board for correct contacting and check the CB initialization parameters: - P918.02 CB Bus Address, - P711.02 to P721.02 CB Parameters 1 to 11
F087 SIMOLINK initialization fault	A fault has occurred during initialization of the SLB board.	- Replace CU - Replace SLB
F099 Friction characteristic record	Recording of the friction characteristic was interrupted or not done at all.	Fault value r949 gives the cause (bit coded): Bit Meaning Value displayed 0 Pos. speed limit 1 1 Neg. speed limit 2 2 Releases missing: direction of rotation, inverter, controller 4 3 Speed controller connecting 8 4 Interrupt through cancellation of the record command 16 5 Illegal dataset changover 32 6 Time exceeded 64 7 Measuring error 128
F109 Mld R(L)	The rotor resistance determined during measurement of the direct current deviates too greatly.	
F111 MId DSP	A fault has occurred during the Mot Id. r949=1 The current does not build up when voltage pulses are applied r949=121 The stator resistance P121 is not determined correctly r949=124 The rotor time constant P124 is parameterized with the value 0 ms r949=347 The valve voltage drop P347 is not determined correctly	
F112 Mid X(L)	A fault has occurred during measurement of the motor inductances or leakages.	
F114 MId OFF	The converter has automatically stopped the automatic measurement due to the time limit up to power-up having been exceeded or due to an OFF command during the measurement, and has reset the function selection in P115.	Re-start with P115 function selection = 2 "Motor identification at standstill".The ON command must be given within 20 sec. after the alarm message A078 = standstill measurement has appeared. Cancel the OFF command and re-start measurement.
F116 Technology board fault not Compact PLUS	See TB documentation	
F117 Technology board fault not Compact PLUS	See TB documentation	

Number / Fault	Cause	Counter-measure
F118 Technology board fault not Compact PLUS	See TB documentation	
F119 Technology board fault not Compact PLUS	See TB documentation	
F120 Technology board fault not Compact PLUS	See TB documentation	
F121 Technology board fault not Compact PLUS	See TB documentation	
F122 Technology board fault not Compact PLUS	See TB documentation	
F123 Technology board fault not Compact PLUS	See TB documentation	
F124 Technology board fault not Compact PLUS	See TB documentation	
F125 Technology board fault not Compact PLUS	See TB documentation	
F126 Technology board fault not Compact PLUS	See TB documentation	
F127 Technology board fault not Compact PLUS	See TB documentation	
F128 Technology board fault not Compact PLUS	See TB documentation	
F129 Technology board fault not Compact PLUS	See TB documentation	
F130 Technology board fault not Compact PLUS	See TB documentation	

Number / Fault	Cause	Counter-measure
F131 Technology board fault not Compact PLUS	See TB documentation	
F132 Technology board fault not Compact PLUS	See TB documentation	
F133 Technology board fault not Compact PLUS	See TB documentation	
F134 Technology board fault not Compact PLUS	See TB documentation	
F135 Technology board fault not Compact PLUS	See TB documentation	
F136 Technology board fault not Compact PLUS	See TB documentation	
F137 Technology board fault not Compact PLUS	See TB documentation	
F138 Technology board fault not Compact PLUS	See TB documentation	
F139 Technology board fault not Compact PLUS	See TB documentation	
F140 Technology board fault not Compact PLUS	See TB documentation	
F141 Technology board fault not Compact PLUS	See TB documentation	
F142 Technology board fault not Compact PLUS	See TB documentation	
F143 Technology board fault not Compact PLUS	See TB documentation	

Number / Fault	Cause	Counter-measure
F144 Technology board fault not Compact PLUS	See TB documentation	
F145 Technology board fault not Compact PLUS	See TB documentation	
F146 Technology board fault not Compact PLUS	See TB documentation	
F147 Technology board fault not Compact PLUS	See TB documentation	
F148 Fault 1 Function blocks	An active signal is present at binector U061 (1).	Examine cause of fault, see function diagram 710
F149 Fault 2 Function blocks	An active signal is present at binector U062 (1).	Examine cause of fault, see function diagram 710
F150 Fault 3 Function blocks	An active signal (1) is present at binector U063.	Examine cause of fault, see function diagram 710
F151 Fault 4 Function blocks	An active signal is present at binector U064 (1).	Examine cause of fault, see function diagram 710
F152 Signs of life repeatedly invalid.	After an appropriate number of invalid signs of life, the sign of life monitoring block has gone into fault status.	Check cause of fault, see function diagram 170
F244 ParaLink int. Compact PLUS only	Fault in the internal parameter linking	Release comparison of gating unit software and operating software regarding the transfer parameters. If the fault re-occurs, replace the unit.
F255 Fault in EEPROM	A fault has occurred in the EEPROM.	Switch off the unit and switch it on again. Replace CU (-A10) or unit (Compact PLUS)

Table 1 Fault numbers, causes and their counter-measures

Alarms

The alarm message is periodically displayed on the PMU by A = alarm/ alarm message and a 3-digit number. An alarm cannot be acknowledged. It is automatically deleted once the cause has been eliminated. Several alarms can be present. The alarms are then displayed one after the other.

When the converter is operated with the OP1S operator control panel, the alarm is indicated in the lowest operating display line. The red LED additionally flashes (refer to the OP1S operating instructions).

Number / Alarm	Cause	Counter-measure
A001 Time slot overflow	The computing time work load is too high	- Reduce pulse frequency - Calculate individual function blocks in slower time slots (parameter U950 ff.)
A002 SIMOLINK start alarm	Start of the SIMOLINK ring is not functioning.	- Check the fiber-optic cable ring for interruptions - Check whether there is an SLB without voltage in the ring - Check whether there is a faulty SLB in the ring
A003 Drive not synchronous	Although synchronization has been activated, the drive is not synchronous. Possible causes are: - Poor communication connection (frequent telegram failures) - Slow bus cycle times (in the case of high bus cycle times or synchronization of slow time slots, synchronizing can last for 1-2 minutes in the worst case). - Incorrect wiring of the time counter (only if P754 > P746 /T0)	SIMOLINK (SLB): - Check r748 i002 and i003 = counters for CRC faults and timeout faults - Check the fiber-optic cable connection - Check P751 on the dispatcher (connector 260 must be softwired); Check P753 on the transceiver (corresponding SIMOLINK connector K70xx must be softwired).
A004 Alarm startup of 2nd SLB	Startup of the 2nd SIMOLINK ring does not function.	- Check the fiber optic cable ring for any disconnections - Check whether an SLB in the ring is without voltage - Check whether an SLB in the ring is faulty
A005 Couple full	The closed-loop electronic system of MASTERDRIVES MC consists of two microprocessors. Only a limited number of couple channels are provided for transferring data between the two processors. The alarm displays that all couple channels between the two processors are busy. An attempt has, however, been made to interconnect another connector requireing a couple channel.	None
A014 Simulation active alarm	The DC link voltage is not equal to 0 when the simulation mode is selected (P372 = 1).	- Set P372 to 0. - Reduce DC link voltage (disconnect the converter from the supply)
A015 External alarm 1	Parameterizable external alarm input 1 has been activated.	Check - whether the cable to the corresponding digital input has been interrupted. - parameter P588 Src No Ext Warn1
A016 External alarm 2	Parameterizable external alarm input 2 has been activated.	Check - whether the cable to the corresponding digital input has been interrupted. - parameter P589 Src No Ext Warn2

Number / Alarm	Cause	Counter-measure
A017 SAFE STOP alarm active	SAFE STOP is detected in the READY states.	See F017 for causes/counter-measures.
A018 Encoder adjustment	Signal amplitude Resolver/encoder in the critical range.	See F051 for causes/counter-measures. As a general rule, it is necessary to initialize the starting position again => power OFF/ON or switch to the drive settings and back again!!! If alarm A18 occurs in the"Ready" status (r001 = 009) while an encoder is in use, the amplitude of the CD track signal is too small, or the connection to CD_Track may be interrupted, or an encoder without CD-Track is in use. In the case of an encoder without CD track, the P130 must be correctly set.
A019 Encoder data serial protocol	Connection fault of the serial protocol on multiturn encoders (SSI/Endat)	Serial protocol is defective on multiturn encoders. See F051 for causes/counter-measures. As a general rule, it is necessary to initialize the starting position again => power OFF/ON or switch to the drive settings and back again!!!
A020 Encoder adjustment, external encoder	The amplitude of an external encoder lies in the critical range.	Cause/remedies see F051 As a general rule, it is necessary to initialize the starting position again => power OFF/ON or switch to the drive settings and back again!!!
A021 Encoder data of external multiturn encoder faulty	A fault has occurred during processing of the serial protocol to an external code rotary encoder (SSI- or Endat-Multiturn).	Faulty serial protocol in the case of an external multiturn encoder. Cause/remedies see F051 As a general rule, it is necessary to initialize the starting position again => power OFF/ON or switch to the drive settings and back again!!
A022 Inverter temperature	The threshold for tripping an alarm has been exceeded.	- Measure intake air and ambient temperature. - Observe derating curves at Theta > 50°C (Compact PLUS) or 40°C - Check whether the fan is operating - Check whether the air entry and discharge openings are restricted.
A023 Motor temperature	The parameterizable threshold (P380) for tripping an alarm has been exceeded.	Check the motor (load, ventilation, etc.). Read off the current temperature in r009 Motor Temperat.
A025 I2t converter	If the current load state is maintained, a thermal overload of the converter occurs. The converter will lower the max. current limit (P129).	- Reduce converter load - Check r010 (Drive Utiliz)
A028 Diagnostics counter	The position of an encoder (motor encoder or external encoder) was incorrect for one or more samplings. This can result from EMC faults or a loose contact. When faults start to occur at a certain rate, fault message F51 is triggered by the corresponding fault variable.	For test purposes, fault message F51 can be triggered with the setting P847=2 in order to obtain more information about fault variable r949. All indices can also be monitored in r849 in order to find out which diagnostics counter counts the fault. If alarm A28 is hidden for this fault, then the corresponding index in P848 can be set to 1.

Number / Alarm	Cause	Counter-measure
A029 I2t motor	The parameterized limit value for the I2t monitoring of the motor has been exceeded.	Motor load cycle is exceeded! Check the parameters: P382 Motor Cooling P383 Mot Tmp T1 P384 Mot Load Limits
A032 PRBS Overflow	An overflow has occurred during recording with noise generator PRBS	
A033 Overspeed	The positive or negative maximum speed has been exceeded.	- Increase relevant maximum speed - Reduce regenerative load (see FD 480)
A034 Setpoint/actual value deviation	Bit 8 in r552 status word 1 of the setpoint channel. The difference between freqeuncy setpoint/actual value is greater than the parameterized value and the control monitoring time has elapsed.	Check - whether an excessive torque requirement is present - whether the motor has been dimensioned too small. Increase values P792 Perm Deviation Frq/ set/actual DevSpeed and P794 Deviation Time
A036 Brake checkback "Brake still closed"	The brake checkback indicates the "Brake still closed" state.	Check brake checkback (see FD 470)
A037 Brake checkback "Brake still open"	The brake checkback indicates the "Brake still open" state.	Check brake checkback (see FD 470)
A042 Motor stall/block	Motor is stalled or blocked. The alarm cannot be influenced by P805 "PullOut/BlckTime", but by P794 "Deviation Time"	Check - whether the drive is blocked - Whether the drive has stalled
A049 No slave not Compact PLUS	At serial I/O (SCB1 with SCI1/2), no slave is connected or fiber-optic cable is interrupted or slaves are without voltage.	P690 SSCI AnaIn Conf - Check slave. - Check cable.
A050 Slave incorrect not Compact PLUS	At ser. I/O the slaves required according to a parameterized configuration are not present (slave number or slave type): Analog inputs or outputs or digital inputs or outputs have been parameterized which are not physically present.	Check parameter P693 (analog outputs), P698 (digital outputs). Check connectors K4101...K4103, K4201...K4203 (analog inputs) and binectors B4100...B4115, B4120...B4135, B4200...B4215, B4220...B4235 (digital inputs) for connecting.
A051 Peer baud rate not Compact PLUS	In a peer-to-peer connection a baud rate has been selected which is too high or too different.	Adjust the baud rate in conjunction with the SCB boards P701 SCom/SCB Baud Rate
A052 Peer PcD L not Compact PLUS	In a peer-to-peer connection, a PcD length has been set which is too high (>5).	Reduce number of words P703 SCom/SCB PcD #
A053 Peer Lng f. not Compact PLUS	In a peer-to-peer connection, the pcD length of transmitter and receiver do not match.	Adjust the word length for transmitter and receiver P703 SCom/SCB PcD #
A057 TB Param not Compact PLUS	Occurs when a TB is logged on and present, but parameter tasks from the PMU, SCom1 or SCom2 have not been answered by the TB within 6 seconds.	Replace TB configuration (software)

Number / Alarm	Cause	Counter-measure
A061 Alarm 1 Function blocks	An active signal is present at binector U065 (1).	Check cause of alarm (see FD 710)
A062 Alarm 2 Function blocks	An active signal is present at binector U066 (1).	Check cause of alarm (see FD 710)
A063 Alarm 3 Function blocks	An active signal is present at binector U067 (1).	Check cause of alarm (see FD 710)
A064 Alarm 4 Function blocks	An active signal is present at binector U068 (1).	Check cause of alarm (see FD 710)
A072 Frict Char Init	Automatic initiation of the friction characteristic has been selected, but the drive has not yet been switched on. NOTE: If the ON command is not given within 30 seconds, the automatic initiation of the friction characteristic is stopped with fault F099.	Energize drive. (Drive status "Operation" 014)
A073 Interr InitFric	Automatic initiation of the friction characteristic has been interrupted (OFF command or fault). NOTE: If the drive is not switched on again within 5 minutes, the automatic initiation of the friction characteristic is stopped (F099).	Rectifiy any causes of the fault. Re-energize the drive.
A074 Incompl FricChar	Incomplete initiation of friction characteristic. As there is a lack of enables or due to limitations, complete initiation of the friction characteristic is not possible in both directions.	Grant enable for both directions of rotation. Set the speed limitations for both directions such that all characteristic points can be approached.
A075	The measured values of the leakage measurement or of rotor resistance deviate significantly.	If individual measured values significantly deviate from the average values, they are automatically disregarded in the calculation (for RI) or the value of the automatic parameterization remains (for Ls). It is only necessary to check the results for their plausibility in the case of drives with high requirements on torque or speed accuracy.
A078 Stands. Meas	The standstill measurement is executed when the converter is powered up. The motor can align itself several times in a certain direction with this measurement.	If the standstill measurement can be executed without any danger: - Power up the converter.
A081 CB alarm	The following description refers to the 1st CBP. For other CBs or the TB see operating instructions for CB board. The ID byte combinations which are being sent from the DP master in the configuration telegram are not in conformance with the permissible ID byte combinations. (See also Compendium, Chapter 8, Table 8.2-12). Consequence: No connection is made with the PROFIBUS master.	New configuration necessary
A082 CB alarm	The following description refers to the CBP. For other CBs or the TB see the operating instructions for the CB board. No valid PPO type can be identified from the configuration telegram of the DP master. Consequence: No connection is made with the PROFIBUS master.	New configuration necessary.

Number / Alarm	Cause	Counter-measure
A083 CB alarm	The following description refers to the 1st CBP. For other CBs or the TB see the operating instructions for the CB board. No net data or invalid net data (e.g. complete control word STW1=0) are being received from the DP master. Consequence: The process data are not passed on to the dual port RAM. If P722 (P695) is not equal to zero, this will cause the fault message F082 to be tripped.	
A084 CB alarm	The following description refers to the 1st CBP. For other CBs or the TB see the operating instructions for the CB board. The telegram traffic between the DP master and the CBP has been interrupted (e.g. cable break, bus cable pulled out or DP master powered down). Consequence: If P722 (P695) is not equal to zero, this will cause the fault message F082 to be tripped.	
A085 CB alarm	The following description refers to the 1st CBP. For other CBs or the TB see the operating instructions for the CB board. The CBP does not generate this alarm!	
A086 CB alarm	The following description refers to the 1st CBP. For other CBs or the TB see the operating instructions for the CB board. Failure of the heartbeat counter on the basic unit. The heartbeat counter on the basic unit is no longer being incremented. The communication between the CBP and the basic board is disturbed.	
A087 CB alarm	The following description refers to the 1st CBP. For other CBs or the TB see the operating instructions for the CB board. Fault in the DPS manager software of the CBP.	
A088 CB alarm	See user manual for CB board	
A089 CB alarm	See user manual for CB board Alarm of the 2nd CB board corresponds to A81 of the 1st CB board	
A090 CB alarm	See user manual for CB board Alarm of the 2nd CB board corresponds to A82 of the 1st CB board	
A091 CB alarm	See user manual for CB board Alarm of the 2nd CB board corresponds to A83 of the 1st CB board	
A092 CB alarm	See user manual for CB board Alarm of the 2nd CB board corresponds to A84 of the 1st CB board	
A093 CB alarm	See user manual for CB board Alarm of the 2nd CB board corresponds to A85 of the 1st CB board	
A094 CB alarm	See user manual for CB board Alarm of the 2nd CB board corresponds to A86 of the 1st CB board	
A095 CB alarm	Alarm of the 2nd CB board. Corresponds to A87 of the 1st CB board See user manual for CB board	

Number / Alarm	Cause	Counter-measure
A096 CB alarm	See user manual for CB board Alarm of the 2nd CB board corresponds to A88 of the 1st CB board	
A097 TB alarm 1 not Compact PLUS	See user manual for TB board	
A098 TB alarm 1 not Compact PLUS	See user manual for TB board	
A099 TB alarm 1 not Compact PLUS	See user manual for TB board	
A100 TB alarm 1 not Compact PLUS	See user manual for TB board	
A101 TB alarm 1 not Compact PLUS	See user manual for TB board	
A102 TB alarm 1 not Compact PLUS	See user manual for TB board	
A103 TB alarm 1 not Compact PLUS	See user manual for TB board	
A104 TB alarm 1 not Compact PLUS	See user manual for TB board	
A105 TB alarm 1 not Compact PLUS	See user manual for TB board	
A106 TB alarm 1 not Compact PLUS	See user manual for TB board	
A107 TB alarm 1 not Compact PLUS	See user manual for TB board	
A108 TB alarm 1 not Compact PLUS	See user manual for TB board	
A109 TB alarm 1 not Compact PLUS	See user manual for TB board	

Number / Alarm	Cause	Counter-measure
A110 TB alarm 1 not Compact PLUS	See user manual for TB board	
A111 TB alarm 1 not Compact PLUS	See user manual for TB board	
A112 TB alarm 1 not Compact PLUS	See user manual for TB board	
A113 TB alarm 2 not Compact PLUS	See user manual for TB board	
A114 TB alarm 2 not Compact PLUS	See user manual for TB board	
A115 TB alarm 2 not Compact PLUS	See user manual for TB board	
A116 TB alarm 2 not Compact PLUS	See user manual for TB board	
A117 TB alarm 2 not Compact PLUS	See user manual for TB board	
A118 TB alarm 2 not Compact PLUS	See user manual for TB board	
A119 TB alarm 2 not Compact PLUS	See user manual for TB board	
A120 TB alarm 2 not Compact PLUS	See user manual for TB board	
A121 TB alarm 2 not Compact PLUS	See user manual for TB board	
A122 TB alarm 2 not Compact PLUS	See user manual for TB board	

Number / Alarm	Cause	Counter-measure
A123 TB alarm 2 not Compact PLUS	See user manual for TB board	
A124 TB alarm 2 not Compact PLUS	See user manual for TB board	
A125 TB alarm 2 not Compact PLUS	See user manual for TB board	
A126 TB alarm 2 not Compact PLUS	See user manual for TB board	
A127 TB alarm 2 not Compact PLUS	See user manual for TB board	
A128 TB alarm 2 not Compact PLUS	See user manual for TB board	
A129 Axis does not exist - machine data 1 = 0	Machine data 1 (position encoder type/axis type) is 0 (axis does not exist). Effect: Operation of the axis is inhibited and the position controller is deactivated.	You must assign a valid value to machine data 1 in order to operate the axis.
A130 Operating conditions do not exist	The "in operation" [IOP] checkback signal was missing when a traversing command was initiated. The following causes inhibit the "in operation" checkback signal (status bit No.2, refer to function diagram sheet 200) : -Control signals [OFF1], [OFF2], [OFF3] and/or "enable controller" [ENC] are not activated. -Checkback signals [OFF2] and/or [OFF3] are not activated. -A fault [FAULT] is active. Effect: The traversing command is inhibited.	Activate control signals [OFF1], [OFF2], [OFF3] and "enable controller" [ENC]. -If checkback signals [OFF2] and/or [OFF3] are missing, check the supply of control word 1 (MASTERDRIVES function diagram, sheet 180). -Analyze the queued fault number [FAULT_NO], remedy the fault, and then cancel the fault using the acknowledge fault [ACK_F] control signal. NOTE: To activate the "in operation" [IOP] status again, you must deactivate [OFF1] and then activate it again.
A131 OFF1 missing	Control signal [OFF1] was deactivated while a traversing command was being executed. Effect: The drive is brought to a standstill via a ramp (P464 Deceleration Time). There is a subsequent pulse disable. This also valid if P443 =0 (function diagramm 310) and the ramp generator bypass (function diagramm 320) is used.	Check the activation of control signal [OFF1] from the user program.

Number / Alarm	Cause	Counter-measure
A132 OFF2 missing	-Control signal [OFF2] was deactivated while a traversing command was being executed. -Checkback signal [OFF2] was deactivated while a traversing command was being executed. Effect: The pulse disable is initiated immediately. If the motor is not braked, it coasts down.	-Check the activation of control signal [OFF2] from the user program. -If checkback signal [OFF2] is missing, check the supply of control word 1 (MASTERDRIVES function diagram, sheet 180). NOTE: To activate the "in operation" [IOP] status again, you must deactivate [OFF1] and then activate it again.
A133 OFF3 missing	-Control signal [OFF3] was deactivated while a traversing command was being executed. -Checkback signal [OFF3] was deactivated while a traversing command was being executed. Effect: The motor decelerates at the current limit. There is a subsequent pulse disable.	-Check the activation of control signal [OFF3] from the user program. -If checkback signal [OFF3] is missing, check the supply of control word 1 (MASTERDRIVES function diagram, sheet 180). NOTE: To activate the "in operation" [IOP] status again, you must deactivate [OFF1] and then activate it again.
A134 Enable Controller ENC missing	The "enable controller" [ENC] control signal was deactivated while a traversing command was being executed (control bit No.3 "Inverter Enable", refer to function diagram, sheet 180) Effect: The pulse disable is initiated immediately. If the motor is not braked, it coasts down.	Check the activation of the "enable controller" [ENC] control signal from the user program.
A135 Actual position value not o.k	Actual position value not o.k. from position sensing (B0070 / B0071)	-Check interconnection of B0070 and B0071, -check position encoder and evaluation board, -check encoder cable.
A136 Machine data 1 changed - RESET necessary	Machine data 1 (position encoder type/axis type) was changed. Effect: The activation of traversing commands is inhibited.	If machine data 1 has been changed, the "reset technology" [RST] control signal must be activated. Alternatively switch the MASTERDIVES electronic power supply off and on again
A137 Axis assignment incorrect	The same axis assignment (machine data 2) was entered for several axes (M7 only, not significant for the F01 technology option). Effect: The activation of traversing commands is inhibited.	A unique axis assignment must be entered for all axes on an M7-FM. For example, it is not allowed to define two X axes.
A138 Axis assignment of roll feed incorrect	The NC block contains an axis number which is defined as a roll feed axis but the axis type is defined as an incremental or absolute position encoder (machine data 1 = 1 or 2). (M7 only, not significant for the F01 technology option). The NC block for a roll feed axis type (machine data 1 = 3) contains: -No axis number (X, Y, Z...) -An incorrect axis number Effect: NC program execution is inhibited or aborted.	-Axis type 1 or 2:The block is not allowed to contain an axis number which is defined as a roll feed (M7 only). -Axis type 3:The axis number of the roll feed must be specified in every NC block.

Number / Alarm	Cause	Counter-measure
A140 Following error in standstill	The following error limit for standstill was exceeded at standstill: -Following error monitoring - at standstill (machine data 14) was entered incorrectly. -The value entered for "in position - exact stop window" (machine data 17) is greater than the value in "following error monitoring - at standstill" (machine data 14). -The axis was pushed out of position mechanically. Effect: The position control system is deactivated and the axis decelerates via "deceleration time during errors" (machine data 43).	-Check and correct the machine data. -Optimize the speed/current controller, -Rectify mechanical problem.
A141 Following error in motion	The following error limit for motion was exceeded during a traversing movement: -Following error monitoring - in motion (machine data 15) was entered incorrectly. -The mechanical system cannot follow the commands of the position controller. -Actual position value invalid -Incorrect optimization of the position controller or speed controller. -The mechanical system is sluggish or blocked. Effect: The position control system is deactivated and the drive decelerates via "deceleration time during faults" (machine data 43).	-Check and correct the machine data. -Check the actual position value (speed-controlled operation); check position encoder, evaluator module and encoder lead. -Optimize the position controller or the speed controller. -Check the mechanical system.
A142 In position - timer monitoring	The "in position - exact stop window" was not reached within the time specified in"in position - timer monitoring": -In position - exact stop window (machine data 17) too small -In position - timer monitoring (machine data 16) too short -Position controller or speed controller not optimized -Mechanical causes Effect: The position control system is deactivated.	-Check and correct the machine data. -Optimize the position controller or speed controller. -Check the mechanical system.
A145 Actual-value disable not allowed - axis standstill	The "digital input" with the "disable actual value" function was actuated while the roll feed was running. Effect: The axis movement is stopped via the deceleration ramp, the "disable actual value" function is not executed.	The "digital input" for "disable actual value" can only be actuated when the axis is stationary.

Number / Alarm	Cause	Counter-measure
A146 Direction of movement not allowed	A positioning movement was aborted. When attempting to resume the movement at the point of interruption, the roll feed would have had to travel in the opposite direction to reach the programmed target position. This is inhibited by the setting of machine data 37 "response after abort". There are various possible reasons for the axis crossing the target position when a positioning movement is aborted: -Motor coastdown -The axis was moved intentionally, e.g. in setup mode. Effect: The axis movement is inhibited.	Move the axis in front of the target position in setup mode before continuing.
A148 Deceleration = 0	The current deceleration value is 0, e.g. because of a RAM storage error or an error in the technology firmware. Effect: The position control system is deactivated and the drive is decelerated via the "deceleration time during errors" (machine data 43).	This fault should not normally occur. It is used as an emergency stop feature for the technology software. Replace the hardware (M7; MCT).
A149 Distance to go negative	Internal error in the technology software. Effect: The position control system is deactivated and the drive is decelerated via the "deceleration time during errors" (machine data 43).	This fault should not normally occur. It is used as an emergency stop feature for the technology software.
A150 Slave axis already allocated to other master axis	The selected NC program contains a slave axis which is already being used by another master axis (M7 only, not significant for the F01 technology option). Example: NC program 1, started in axis X, contains NC blocks for axes X and Y. NC program 2 is started in axis Z and contains NC blocks for axes Z and Y. This program is denied with warning 150, because axis Y is already being used by program 1. Effect: NC program execution is inhibited or aborted.	The same slave axis cannot be used simultaneously by several NC programs.
A151 Slave axis operating mode not allowed	The slave axis required by the master axis is not in "slave" mode (M7 only, not significant for the F01 technology option). Effect: NC program execution is inhibited or aborted, the axis is brought to a standstill via the deceleration ramp.	The slave axis must be switched to "slave" mode.
A152 Slave axis operating mode changed	The "slave" mode was deselected in the slave axis during the traversing movement (M7 only, not significant for the F01 technology option). Effect: NC program execution is inhibited or aborted, the axis is brought to a standstill via the deceleration ramp.	The slave axis must remain switched to "slave" mode.

Number / Alarm	Cause	Counter-measure
A153 Error in slave axis	A warning is active in the slave axis required by the master axis (M7 only, not significant for the F01 technology option). Effect: NC program execution is inhibited or aborted, the axis is brought to a standstill via the deceleration ramp.	The NC program will only run if all of the axes it needs are error-free. To clear this warning, you must first clear all the warnings in the slave axis.
A154 Follow-up mode in slave axis active	The "follow-up mode" [FUM] control signal is active in the slave axis required by the master axis. A slave axis which is switched to follow-up mode cannot be operated by the master axis (M7 only, not significant for the F01 technology option). Effect: NC program execution is inhibited or aborted, the axis is brought to a standstill via the deceleration ramp.	Deactivate follow-up mode in the slave axis.
A155 Reset in slave axis active	The "reset" [RST] control signal is active in the slave axis required by the master axis. A slave axis with an active reset cannot be used by the master axis (M7 only, not significant for the F01 technology option. Effect: NC program execution is inhibited or aborted, the axis is brought to a standstill via the deceleration ramp.	Cancel the "reset" [RST] control signal in the slave axis.
A156 Axis type (MD1) of slave axis not allowed	An NC program was started in which a slave axis is defined as a roll feed axis type (M7 only, not significant for the F01 technology option). The warning is output in the master axis and indicates an illegal axis type in the slave axis. Effect: NC program execution is inhibited or aborted, the axis is brought to a standstill via the deceleration ramp.	Axes defined as roll feed axes can only be used in dedicated NC programs.
A160 Setup speed = 0	The value entered in level 1 or level 2 for the [F_S] velocity level in setup mode is zero. Effect: The axis movement is inhibited.	Define a permissible velocity level for level 1 and/or level 2. The permissible value range is between 0.01 [1000*LU/min] and "traversing velocity - maximum (machine data 23).
A161 Reference approach velocity = 0	The velocity value entered for "reference point - approach velocity" (machine data 7) is zero. Effect: The axis movement is inhibited.	Enter a permissible value for the approach velocity. The permissible value range is between 0.01 [1000*LU/min] and "traversing velocity - maximum (machine data 23).
A162 Reference point - reducing velocity = 0	The velocity value entered for "reference point - reducing velocity" (machine data 6) is zero. Effect: The axis movement is inhibited or stopped.	Enter a permissible value for the reference point -reducing velocity. The permissible value range is between 0.01 and 1000 [1000*LU/min].
A165 MDI block number not allowed	The MDI block number [MDI_NO] specified in the control signals is greater than 11. Effect: The axis movement is inhibited.	Define an MDI block number [MDI_NO] between 0 and 10.
A166 No position has been programmed in MDI mode	The "start" [STA] control signal was activated in MDI mode without initially transferring a positional value to the selected MDI block. Effect: The axis movement is inhibited.	Use the correct sequence: data transfer followed by axis start.

Number / Alarm	Cause	Counter-measure
A167 No velocity has been programmed in MDI mode	The "start" [STA] control signal was activated in MDI mode without initially transferring a velocity value to the selected MDI block. Effect: The axis movement is inhibited.	Use the correct sequence: data transfer followed by axis start.
A168 G91 not allowed with MDI on the fly	G91 (incremental dimensions) was defined in the MDI block as the 1st G function for the MDI on-the-fly function. Effect: The axis movement is inhibited or stopped via the deceleration ramp.	The MDI on-the-fly function only allows G90 (absolute dimensions) as the 1st G function.
A169 Start conditions for flying MDI do not exist	-Control signal "reset technology" [RST] activated -Control signal "follow-up mode" [FUM] activated Effect: The "MDI on-the-fly" function is not executed.	Ensure that the control signals are activated correctly.
A170 Single block mode block does not exist	An NC block was started in single-block mode although a block has not yet been transferred. Effect: NC block execution is inhibited.	Transfer the block.
A172 Program with this number does not exist	The program number specified in [PROG_NO] for automatic mode is not stored in the memory of the technology. Effect: NC program execution is inhibited.	-Transfer the program to the technology. -Select the correct program number.
A173 Program number not allowed	The program number specified in [PROG_NO] for automatic mode is not allowed. Effect: NC program execution is inhibited.	The permissible range for program numbers is between 1 and 200.
A174 Program number changed during traversing	The program number [PROG_NO] was changed while the program was running. Effect: NC program execution is aborted and the axis or axes are brought to a standstill via the deceleration ramp.	The program number must not be changed while the program is running.
A175 No block end programmed	The decoded NC block is not terminated with the following block identifier "0". You can use the "output actual values - decoder error location" task to read out the program number and block number where the block decoder detected an error. Effect: NC program execution is inhibited or aborted. Moving axes are stopped via the deceleration ramp.	Correct the block. The last block in the sequence must contain the following block identifier "0".
A177 Prog. number of block search forwd. does not exist	The program number for the main program (level 0), which was transferred with the block search function, does not exist. Effect: NC program execution is inhibited.	Specify an existing main program number.

Number / Alarm	Cause	Counter-measure
A178 Program number of block search forward not allowed	-The program number for the main program (level 0), which was transferred with block search, is different from the selected program number. -No breakpoint is known for the "automatic block search" function (a program abort has not yet occurred). -A different program number is stored as the breakpoint for the "automatic block search" function. Effect: NC program execution is inhibited.	For the block search function, the selected program number [PROG_NO] must be specified as the program number for the main program.
A179 Prog.No.of block srch fwd level 1/2 does not exist	The subprogram number specified with block search for level 1 or level 2 does not exist. Effect: NC program execution is inhibited.	For the block search function, an existing program number must be specified as the subprogram number for level 1 or level 2.
A180 Prog.no. of block search forward level 1 <> cmd.	The subprogram number transferred with block search for level 1 is not the same as the subprogram number in the NC block. Effect: NC program execution is inhibited.	For the block search function, the subprogram number specified in the NC block must be specified as the subprogram number for level 1.
A181 Prog.no. of block search forward level 2 <> cmd.	The subprogram number transferred with block search for level 2 is not the same as the subprogram number in the NC block. Effect: NC program execution is inhibited.	For the block search function, the subprogram number specified in the NC block must be specified as the subprogram number for level 2.
A183 Block no. of block search fwd l. 0 does not exist	The block number for the main program (level 0), which was transferred with block search, does not exist in the main program. Effect: NC program execution is inhibited.	For the block search function, an existing block number must be specified as the block number for the main program.
A184 Block no. of block search forward is no UP call	The block number for the main program (level 0), which was transferred with block search, does not contain a subprogram call for subprogram level 1. Effect: NC program execution is inhibited.	For the block search function, a block number with a subprogram call must be specified as the block number for the main program (level 0) if a block search is to be performed in subprogram level 1.
A185 Block no. of block search forward does not exist	The block number for subprogram level 1, which was transferred with block search, does not exist in the subprogram. Effect: NC program execution is inhibited.	For the block search function, a block number which exists in this subprogram must be specified as the block number for subprogram level 1.
A186 Block no of block search fwd level 1 is no UP call	The block number for subprogram level 1, which was transferred with block search, does not contain a subprogram call for subprogram level 2. Effect: NC program execution is inhibited.	For the block search function, a block number with a subprogram call must be specified as the block number for subprogram level 1 if a block search is to be performed in subprogram level 2.
A187 Block no. of block search forward does not exist	The block number for subprogram level 2, which was transferred with block search, does not exist in the subprogram. Effect: NC program execution is inhibited.	For the block search function, a block number which exists in this subprogram must be specified as the block number for subprogram level 2.

Number / Alarm	Cause	Counter-measure
A188 Remaining no of loops block search fwd not allowed	The remaining loop count transferred with block search for subprogram level 1 or 2 is greater than the programmed loop count. Effect: NC program execution is inhibited.	For the block search function, it is only allowed to specify a remaining loop count between 0 and the programmed loop count-1.
A190 Digital input not programmed	The NC block which was read in contains the "inprocess measurement" or "set actual value on-the-fly" function, although a digital input has not been programmed for this function (machine data 45). Effect: NC program execution is inhibited or aborted, the axis is brought to a standstill via the deceleration ramp.	Program the digital input for the desired function.
A191 Digital input not actuated	Although the "external block change" function was programmed, the digital input was not actuated in order to trigger the external block change. Effect: The NC program is interrupted, the axis is brought to a standstill via the deceleration ramp.	-Correct the program. -Check the actuation of the digital input.
A195 Negative overtravel reached	-Negative software limit switch position approached -"Software limit switches - negative" (machine data 12) entered incorrectly -The programmed position is less than the negative software limit switch. -"Reference point - coordinate" (machine data 3) is less than the negative software limit switch. -Incorrect encoder actual value Effect: The axis movement is stopped via the deceleration ramp.	-Check the machine data and the NC program. -Check the encoder actual value.
A196 Positive overtravel reached	-Positive software limit switch position approached -"Software limit switches - positive" (machine data 13) entered incorrectly¨ -The programmed position is greater than the positive software limit switch -"Reference point - coordinate" (machine data 3) is greater than the positive software limit switch -Incorrect encoder actual value Effect: The axis movement is stopped via the deceleration ramp.	-Check the machine data and the NC programs. -Check the encoder actual value.
A200 No position has been programmed in Automatic mode	No position has been programmed in the NC block for the roll feed version, although the axis number of the roll feed is specified. Effect: NC program execution is inhibited or aborted, the axis is brought to a standstill via the deceleration ramp.	The axis number and the positional value must be specified in every NC block for the roll feed version.

Number / Alarm	Cause	Counter-measure
A201 No velocity has been programmed in Automatic mode	The decoded NC block needs a path or axis velocity. Effect: NC program execution is inhibited or aborted, the axis is brought to a standstill via the deceleration ramp.	When using linear interpolation with path velocity (G01), a path velocity must be defined with F. When using chaining with axis velocity (G77), the axis velocities must be defined with FX, FY, etc. When using roll feed with axis velocity (G01), the velocity must be defined with F.
A202 Axis unknown	An axis which does not exist was detected in the decoded NC block. A logical name (X, Y, Z, A, B, C) must be assigned to each axis with machine data 2 (axis assignment). Only these logical axis names can be used in the NC block. These errors cannot normally occur, since the logical axis names are verified when the NC blocks are entered. Exception: Machine data 2 (axis assignment) is changed afterwards. The NC program number and NC block number in which the NC block decoder detected the error can be read out with the "output actual values – decoder error location" task. Effect: NC program execution is inhibited or aborted, the axis is brought to a standstill via the deceleration ramp.	Correct the NC block.
A203 1st G-function not allowed	The NC block which was read in contains an illegal 1st G function. The NC program number and NC block number in which the NC block decoder detected the error can be read out with the "output actual values - decoder error location" task. Effect: The axis movement is inhibited or stopped via the deceleration ramp.	-MDI mode:Only G90 (absolute dimensions) or G91 (incremental dimensions) can be entered as the 1st G function. Only G91 is allowed for the roll feed version. -Automatic/single-block mode:Define a legal 1st G function according to the table (see the Programming Guide).
A204 2nd G-function not allowed	The NC block which was read in contains an illegal 2nd G function. The NC program number and NC block number in which the NC block decoder detected the error can be read out with the "output actual values - decoder error location" task. Effect: The axis movement is inhibited or stopped via the deceleration ramp.	-MDI mode:Only G30 to G39 (acceleration override) can be entered as the 2nd G function. -Automatic/single-block mode:Define a legal 2nd G function according to the table (see the Programming Guide).
A205 3rd G-function not allowed	The NC block which was read in contains an illegal 3rd G function. The NC program number and NC block number in which the NC block decoder detected the error can be read out with the "output actual values - decoder error location" task. Effect: The axis movement is inhibited or stopped via the deceleration ramp.	-MDI mode:No 3rd G function is allowed. -Automatic/single-block mode:Define a legal 3rd G function according to the table (see the Programming Guide).

Number / Alarm	Cause	Counter-measure
A206 4th G-function not allowed	The NC block which was read in contains an illegal 4th G function. The NC program number and NC block number in which the NC block decoder detected the error can be read out with the "output actual values - decoder error location" task. Effect: The axis movement is inhibited or stopped via the deceleration ramp.	-MDI mode:No 4th G function is allowed. -Automatic/single-block mode:Define a legal 4th G function according to the table (see the Programming Guide).
A208 D-number is not allowed	A D number greater than 20 was found in the decoded NC block. The NC program number and NC block number in which the NC block decoder detected the error can be read out with the "output actual values - decoder error location" task. Effect: The axis movement is inhibited or stopped via the deceleration ramp.	Correct the NC block.
A210 Interpolation of 3 axes not allowed	The decoded NC block contains an interpolation of 3 or more axes. The NC program number and NC block number in which the NC block decoder detected the error can be read out with the "output actual values - decoder error location" task. Effect: NC program execution is inhibited or aborted, the axis is brought to a standstill via the deceleration ramp.	Correct the NC block. Only 2D interpolation is allowed.
A211 Shortest distance G68 and G91 not allowed	G function G68 (shortest path for rotary axis) was detected in the decoded NC block, although G91 (incremental dimensions) is active. Example: N10 G91 G68 X20.000 The NC program number and NC block number in which the NC block decoder detected the error can be read out with the "output actual values - decoder error location" task. Effect: NC program execution is inhibited or aborted, the axis is brought to a standstill via the deceleration ramp.	Correct the NC block.Function G68 can only be programmed in association with G90 (absolute dimensions).

Number / Alarm	Cause	Counter-measure
A212 Special function and axis combination not allowed	A different axis was programmed in the NC block following a special function (M7 only). Example: N10 G50 X100 F1000 N15 G90 Y200 incorrect N15 G90 X200 correct The NC program number and NC block number in which the NC block decoder detected the error can be read out with the "output actual values - decoder error location" task. Effect: NC program execution is inhibited or aborted, the axis is brought to a standstill via the deceleration ramp.	Correct the NC program.The axis used in the NC block with the special function must also be programmed in the next NC block.
A213 Multiple D-number not allowed	The decoded NC block contains several D numbers. Example: N1 G41 D3 D5. The NC program number and NC block number in which the NC block decoder detected the error can be read out with the "output actual values - decoder error location" task. Effect: NC program execution is inhibited or aborted, the axis is brought to a standstill via the deceleration ramp.	Correct the NC block.
A214 Multiple acceleration behaviour not allowed	The decoded NC block contains several mutually exclusive G functions from the acceleration override group (G30 to G39). Example: N1 G34 G35 The NC program number and NC block number in which the NC block decoder detected the error can be read out with the "output actual values - decoder error location" task. Effect: NC program execution is inhibited or aborted, the axis is brought to a standstill via the deceleration ramp.	Correct the NC block.
A215 Multiple special functions not allowed	The decoded NC block contains several mutually exclusive G functions from the special function group (G87, G88, G89, G50, G51). Example: N1 G88 G50 The NC program number and NC block number in which the NC block decoder detected the error can be read out with the "output actual values - decoder error location" task. Effect: NC program execution is inhibited or aborted, the axis is brought to a standstill via the deceleration ramp.	Correct the NC block.

Number / Alarm	Cause	Counter-measure
A216 Multiple block transition not allowed	The decoded NC block contains several mutually exclusive G functions from the block transition group (G60, G64, G66, G67). Example: N1 G64 G66 X1.000 FX100.00 The NC program number and NC block number in which the NC block decoder detected the error can be read out with the "output actual values - decoder error location" task. Effect: NC program execution is inhibited or aborted, the axis is brought to a standstill via the deceleration ramp.	Correct the NC block.
A217 Multiple axis programming not allowed	The decoded NC block contains the same axis more than once. Example: N1 G90 G01 X100.000 X200.000 F100.00 The NC program number and NC block number in which the NC block decoder detected the error can be read out with the "output actual values - decoder error location" task. Effect: NC program execution is inhibited or aborted, the axis is brought to a standstill via the deceleration ramp.	Correct the NC block.
A218 Multiple path condition not allowed	The decoded NC block contains several mutually exclusive G functions from the preparatory function group (G00/G01/G76/G77). Example: N1 G01 (linear interpolation) G77 (chaining) X10 F100. The NC program number and NC block number in which the NC block decoder detected the error can be read out with the "output actual values - decoder error location" task. Effect: NC program execution is inhibited or aborted, the axis is brought to a standstill via the deceleration ramp.	Correct the NC block.
A219 Multiple dimensions specification not allowed	The decoded NC block contains several mutually exclusive G functions from the dimensional notation group (G90/G91). Example: N1 G90 G91. The NC program number and NC block number in which the NC block decoder detected the error can be read out with the "output actual values - decoder error location" task. Effect: NC program execution is inhibited or aborted, the axis is brought to a standstill via the deceleration ramp.	Correct the NC block.

Number / Alarm	Cause	Counter-measure
A220 Multiple zero offset selection not allowed	The decoded NC block contains several mutually exclusive G functions from the zero offset group (G53 to G59). Example: N1 G54 G58 The NC program number and NC block number in which the NC block decoder detected the error can be read out with the "output actual values - decoder error location" task. Effect: NC program execution is inhibited or aborted, the axis is brought to a standstill via the deceleration ramp.	Correct the NC block.
A221 Multiple tool offset selection not allowed	The decoded NC block contains several mutually exclusive G functions from the tool offset selection group (G43/G44). Example: N1 G43 G44 D2 The NC program number and NC block number in which the NC block decoder detected the error can be read out with the "output actual values - decoder error location" task. Effect: NC program execution is inhibited or aborted, the axis is brought to a standstill via the deceleration ramp.	Correct the NC block.
A223 Subprogram number does not exist	The decoded NC block contains a subprogram call, however the NC program which was called does not exist in the memory of the technology. Effect: NC program execution is inhibited or aborted, the axis is brought to a standstill via the deceleration ramp.	Correct the NC block.
A224 Subprogram nesting depth not allowed	The permissible nesting depth of subprograms was exceeded. Recursive calling of subprograms. The NC program number and NC block number in which the NC block decoder detected the error can be read out with the "output actual values - decoder error location" task. Effect: NC program execution is inhibited or aborted, the axis is brought to a standstill via the deceleration ramp.	Correct the NC program. The permissible nesting depth for subprograms is 2 subprogram levels.

Number / Alarm	Cause	Counter-measure
A225 Status of collision monitoring select. not allowed	The decoded NC block contains simultaneous selection and deselection of collision monitoring (G96/G97). Example: N1 G96 G97 X100 The NC program number and NC block number in which the NC block decoder detected the error can be read out with the "output actual values - decoder error location" task. Effect: NC program execution is inhibited or aborted, the axis is brought to a standstill via the deceleration ramp.	Correct the NC block.
A227 Negative overtravel violated	The look-ahead function of the decoder has detected that the negative software limit switch will be crossed. See also error message "A195: Negative overtravel reached". The NC program number and NC block number in which the NC block decoder detected the error can be read out with the "output actual values - decoder error location" task. Effect: NC program execution is inhibited or aborted, the axis is brought to a standstill via the deceleration ramp.	Correct the NC program. Check the machine data.
A228 Positive overtravel violated	The look-ahead function of the decoder has detected that the positive software limit switch will be crossed. See also error message "A196: Positive overtravel reached". The NC program number and NC block number in which the NC block decoder detected the error can be read out with the "output actual values - decoder error location" task. Effect: NC program execution is inhibited or aborted, the axis is brought to a standstill via the deceleration ramp.	Correct the NC program. Check the machine data.
A241 Table assignment changed	The table assignment has been changed from 1 table to 2 tables or vice-versa. Effect: NC tables cannot be processed.	Load the table again. NOTE: A table can only be loaded again if it is not selected. The warning is cleared automatically when the table has been successfully loaded.
A242 Table 1 invalid	Table 1 was not loaded correctly or has been reset. Effect: Table 1 cannot be processed.	Load table 1 again. NOTE: Table 1 can only be loaded again if it is not selected. The warning is cleared automatically when table 1 has been successfully loaded.
A243 Table 2 invalid	Table 2 was not loaded correctly or has been reset. Effect: Table 2 cannot be processed.	Load table 2 again. NOTE: Table 2 can only be loaded again if it is not selected. The warning is cleared automatically when table 2 has been successfully loaded.

Number / Alarm	Cause	Counter-measure
A244 Travel table 3 not valid	Travel table 3 has not been correctly adopted or has been reset. Consequence: Travel table 3 cannot be processed.	Adopt travel table 3 again. NOTE: Travel table 3 can only be newly adopted if it is not selected. When travel table 3 has been successfully adopted, the alarm message is automatically canceled.
A245 Travel table 4 not valid	Travel table 4 has not been correctly adopted or has been reset. Consequence: Travel table 4 cannot be processed.	Adopt travel table 4 again. NOTE: Travel table 4 can only be newly adopted if it is not selected. When travel table 4 has been successfully adopted, the alarm message is automatically canceled.
A246 Travel table 5 not valid	Travel table 5 has not been correctly adopted or has been reset. Consequence: Travel table 5 cannot be processed.	Adopt travel table 5 again. NOTE: Travel table 5 can only be newly adopted if it is not selected. When travel table 5 has been successfully adopted, the alarm message is automatically canceled.
A247 Travel table 6 not valid	Travel table 6 has not been correctly adopted or has been reset. Consequence: Travel table 6 cannot be processed.	Adopt travel table 6 again. NOTE: Travel table 6 can only be newly adopted if it is not selected. When travel table 6 has been successfully adopted, the alarm message is automatically canceled.
A248 Travel table 7 not valid	Travel table 7 has not been correctly adopted or has been reset. Consequence: Travel table 7 cannot be processed.	Adopt travel table 7 again. NOTE: Travel table 7 can only be newly adopted if it is not selected. When travel table 7 has been successfully adopted, the alarm message is automatically canceled.
A249 Travel table 8 not valid	Travel table 8 has not been correctly adopted or has been reset. Consequence: Travel table 8 cannot be processed.	Adopt travel table 8 again. NOTE: Travel table 8 can only be newly adopted if it is not selected. When travel table 8 has been successfully adopted, the alarm message is automatically canceled.

Table 2 Alarm numbers, causes and their counter-measures

Fatal errors (FF) Fatal errors are serious hardware or software errors which no longer permit normal operation of the unit. They only appear on the PMU in the form "FF<No>". The software is re-booted by actuating any key on the PMU.

Number / Fault	Cause	Counter-measure
FF01 Time slot overflow	A time slot overflow which cannot be remedied has been detected in the high-priority time slots.	- Reduce pulse frequency (P340) - Replace CU
FF03 Access fault Optional board	Serious faults have occurred while making access to external optional boards (CB, TB, SCB, TSY ..).	- Replace the CU - Replace the LBA - Replace the optional board
FF04 RAM	A fault has occurred during the test of the RAM.	Replace CU
FF05 EPROM fault	A fault has occurred during the test of the EPROM.	Replace CU
FF06 Stack overflow	Stack has overflowed	For VC: Increase sampling time (P357) For MC: Reduce pulse frequency (P340) - Replace the CU
FF07	Stack underflow	* Replace CU * Replace firmware
FF08	Invalid processor command should be processed	* Replace CU * Replace firmware
FF09	Invalid format in a protected processor command	* Replace CU * Replace firmware
FF10	Word access on uneven address	* Replace CU * Replace firmware
FF11	Jump command to uneven address	* Replace CU * Replace firmware
FF13 Wrong firmware version	A version conflict between the firmware and the hardware has occurred.	- Replace firmware - Replace CU
FF14 FF processing	Unexpected fatal error (During processing of the fatal errors, a fault number has occurred which is unknown to date).	Replace the board
FF15 CSTACK_OVERFLOW	Stack overflow (C-Compiler Stack)	Replace the board

Table 3 Fatal errors

Lists of stored motors

Synchronous motors 1FK6 / 1FK7 / 1FT6

Input in P096	Motor order number (MPRD)	Speed n_n [rpm]	Torque M_n [Nm]	Current I_n [A]	Number of pole pairs
1	1FK6032-6AK7	6000	0.8	1.5	3
2	1FK6040-6AK7	6000	0.8	1.75	3
3	1FK6042-6AF7	3000	2.6	2.4	3
4	1FK6060-6AF7	3000	4.0	3.1	3
5	1FK6063-6AF7	3000	6.0	4.7	3
6	1FK6080-6AF7	3000	6.8	5.2	3
7	1FK6083-6AF7	3000	10.5	7.7	3
8	1FK6100-8AF7	3000	12.0	8.4	4
9	1FK6101-8AF7	3000	15.5	10.8	4
10	1FK6103-8AF7	3000	16.5	11.8	4
11	1FT6031-4AK7_	6000	0.75	1.2	2
12	1FT6034-1AK7_-3A 1FT6034-4AK7_	6000	1.4	2.1	2
13	1FT6041-4AF7_	3000	2.15	1.7	2
14	1FT6041-4AK7_	6000	1.7	2.4	2
15	1FT6044-1AF7_-3A 1FT6044-4AF7_	3000	4.3	2.9	2
16	1FT6044-4AK7_	6000	3.0	4.1	2
17	1FT6061-6AC7_	2000	3.7	1.9	3
18	1FT6061-1AF7_-3A 1FT6061-6AF7_	3000	3.5	2.6	3
19	1FT6061-6AH7_	4500	2.9	3.4	3
20	1FT6061-6AK7_	6000	2.1	3.1	3
21	1FT6062-6AC7_	2000	5.2	2.6	3
22	1FT6062-1AF7_-3A 1FT6062-6AF7_	3000	4.7	3.4	3
23	1FT6062-1AH7_ 1FT6062-6AH7_	4500	3.6	3.9	3
24	1FT6062-6AK7_	6000	2.1	3.2	3
25	1FT6064-6AC7_	2000	8.0	3.8	3
26	1FT6064-1AF7_-3A 1FT6064-6AF7_	3000	7.0	4.9	3
27	1FT6064-6AH7_	4500	4.8	5.5	3
28	1FT6064-6AK7_	6000	2.1	3.5	3

Input in P096	Motor order number (MPRD)	Speed n_n [rpm]	Torque M_n [Nm]	Current I_n [A]	Number of pole pairs
29	1FT6081-8AC7_	2000	7.5	4.1	4
30	1FT6081-8AF7_	3000	6.9	5.6	4
31	1FT6081-8AH7_	4500	5.8	7.3	4
32	1FT6081-8AK7_	6000	4.6	7.7	4
33	1FT6082-8AC7_	2000	11.4	6.6	4
34	1FT6082-1AF7_-1A 1FT6082-8AF7_	3000	10.3	8.7	4
35	1FT6082-1AH7_ 1FT6082-8AH7_	4500	8.5	11.0	4
36	1FT6082-8AK7_	6000	5.5	9.1	4
37	1FT6084-8AC7_	2000	16.9	8.3	4
38	1FT6084-1AF7_-1A 1FT6084-8AF7_	3000	14.7	11.0	4
39	1FT6084-8AH7_	4500	10.5	12.5	4
40	1FT6084-8AK7_	6000	6.5	9.2	4
41	1FT6084-8SC7_	2000	23.5	12.5	4
42	1FT6084-8SF7_	3000	22.0	17.0	4
43	1FT6084-8SH7_	4500	20.0	24.5	4
44	1FT6084-8SK7_	6000	17.0	25.5	4
45	1FT6086-8AC7_	2000	22.5	10.9	4
46	1FT6086-1AF7_-1A 1FT6086-8AF7_	3000	18.5	13.0	4
47	1FT6086-8AH7_	4500	12.0	12.6	4
48	1FT6086-8SC7_	2000	33.0	17.5	4
49	1FT6086-8SF7_	3000	31.0	24.5	4
50	1FT6086-8SH7_	4500	27.0	31.5	4
51	1FT6086-8SK7_	6000	22.0	29.0	4
52	1FT6102-8AB7_	1500	24.5	8.4	4
53	1FT6102-1AC7_-1A 1FT6102-8AC7_	2000	23.0	11.0	4
54	1FT6102-8AF7_	3000	19.5	13.2	4
55	1FT6102-8AH7_	4500	12.0	12.0	4
56	1FT6105-8AB7_	1500	41.0	14.5	4
57	1FT6105-1AC7_-1A 1FT6105-8AC7_	2000	38.0	17.6	4
58	1FT6105-8AF7_	3000	31.0	22.5	4
59	1FT6105-8SB7_	1500	59.0	21.7	4
60	1FT6105-8SC7_	2000	56.0	28.0	4
61	1FT6105-8SF7_	3000	50.0	35.0	4

Input in P096	Motor order number (MPRD)	Speed n_n [rpm]	Torque M_n [Nm]	Current I_n [A]	Number of pole pairs
62	1FT6108-8AB7_	1500	61.0	20.5	4
63	1FT6108-8AC7_	2000	55.0	24.5	4
64	1FT6108-8SB7_	1500	83.0	31.0	4
65	1FT6108-8SC7_	2000	80.0	40.0	4
66	1FT6132-6AB7_	1500	62.0	19.0	3
67	1FT6132-6AC7_	2000	55.0	23.0	3
68	1FT6132-6AF7_	3000	36.0	23.0	3
69	1FT6132-6SB7_	1500	102.0	36.0	3
70	1FT6132-6SC7_	2000	98.0	46.0	3
71	1FT6132-6SF7_	3000	90.0	62.0	3
72	1FT6134-6AB7_	1500	75.0	24.0	3
73	1FT6134-6AC7_	2000	65.0	27.0	3
74	1FT6134-6SB7_	1500	130.0	45.0	3
75	1FT6134-6SC7_	2000	125.0	57.0	3
76	1FT6134-6SF7_	3000	110.0	72.0	3
77	1FT6136-6AB7_	1500	88.0	27.0	3
78	1FT6136-6AC7_	2000	74.0	30.0	3
79	1FT6136-6SB7_	1500	160.0	55.0	3
80	1FT6136-6SC7_	2000	150.0	72.0	3
81	1FT6108-8SF7_	3000	70.0	53.0	4
High Dynamic					
82	1FK6033-7AK71 1FK7033-7AK71	6000	0.9	1.5	3
83	1FK6043-7AK71 1FK7043-7AK71	6000	2.0	4.4	3
84	1FK6043-7AH71 1FK7043-7AH71	4500	2.6	4.0	3
85	1FK6044-7AF71 1FK7044-7AF71	3000	3.5	4.0	3
86	1FK6044-7AH71 1FK7044-7AH71	4500	3.0	4.9	3
87	1FK6061-7AF71 1FK7061-7AF71	3000	5.4	5.3	3
88	1FK6061-7AH71 1FK7061-7AH71	4500	4.3	5.9	3
89	1FK6064-7AF71 1FK7064-7AF71	3000	8.0	7.5	3
90	1FK6064-7AH71 1FK7064-7AH71	4500	5.0	7.0	3

Input in P096	Motor order number (MPRD)	Speed n_n [rpm]	Torque M_n [Nm]	Current I_n [A]	Number of pole pairs
91	1FK6082-7AF71 1FK7082-7AF71	3000	8.0	6.7	4
92	1FK6085-7AF71 1FK7085-7AF71	3000	6.5	7.0	4
100 to 119	Reserved for future applications				
Water cooling					
120	1FT6062-6WF7	3000	10.1	7.5	3
121	1FT6062-6WH7	4500	10.0	11.0	3
122	1FT6062-6WK7	6000	9.8	15.2	3
123	1FT6064-6WF7	3000	16.1	11.4	3
124	1FT6064-6WH7	4500	16.0	18.5	3
125	1FT6064-6WK7	6000	15.8	27.0	3
126	1FT6082-8WC7	2000	22.1	13.6	4
127	1FT6082-8WF7	3000	21.6	19.1	4
128	1FT6082-8WH7	4500	20.8	28.4	4
129	1FT6082-8WK7	6000	20.0	32.6	4
130	1FT6084-8WF7	3000	35.0	27.0	4
131	1FT6084-8WH7	4500	35.0	39.0	4
132	1FT6084-8WK7	6000	34.0	51.0	4
133	1FT6086-8WF7	3000	46.0	37.0	4
134	1FT6086-8WH7	4500	45.0	53.0	4
135	1FT6086-8WK7	6000	44.0	58.0	4
136	1FT6105-8WC7	2000	82.0	60.0	4
137	1FT6105-8WF7	3000	78.0	82.0	4
138	1FT6108-8WB7	1500	116.0	43.0	4
139	1FT6108-8WC7	2000	115.0	57.0	4
140	1FT6108-8WF7	3000	109.0	81.0	4
141 to 149	for future applications				
Other types					
150	1FT6108-8AF7	3000	37.0	25.0	4
151	1FT6105-8SH7	4500	40.0	41.0	4
152	1FT6136-6SF7	3000	145.0	104.0	3
153	1FT6021-6AK7	6000	0.3	1.1	3
154	1FT6024-6AK7	6000	0.5	0.9	3
155 to 159	for future applications				

Input in P096	Motor order number (MPRD)	Speed n_n [rpm]	Torque M_n [Nm]	Current I_n [A]	Number of pole pairs
Compact					
160	1FK7022-5AK71	1)	1)	1)	1)
161	1FK7032-5AK71	1)	1)	1)	1)
162	1FK7040-5AK71	6000	1.2	1.7	4
163	1FK7042-5AF71	3000	2.6	1.9	4
164	1FK7042-5AK71	6000	1.5	2.2	4
165	1FK7060-5AF71	3000	4.7	3.6	4
166	1FK7060-5AH71	4500	3.7	4.1	4
167	1FK7063-5AF71	3000	7.3	5.6	4
168	1FK7063-5AH71	4500	3.0	3.8	4
169	1FK7080-5AF71	3000	6.2	4.0	4
170	1FK7080-5AH71	4500	4.3	4.3	4
171	1FK7083-5AF71	3000	10.0	7.1	4
172	1FK7083-5AH71	4500	3.0	3.6	4
173	1FK7100-5AF71	3000	12.0	7.6	4
174	1FK7101-5AF71	3000	14.0	10.5	4
175	1FK7103-5AF71	3000	14.0	12.0	4
176 to 180	for future applications				

Table 4 Motor list 1FK6 / 1FK7 / 1FT6

1) Data were not already available for V1.60.

Asynchronous motors 1PH7 / 1PL6 / 1PH4

For 1PH7, 1PH4, and 1PL6 motors, the up-to-date calculation data have been stored in the unit. These might differ from the rating plate slightly. Always use the data stored. The magnetization current is determined by automatic parameterization.

NOTE

1PH7xxx is the new designation of what were formerly 1PA6xxx motors. The 1PH7xxx and 1PA6xxx data therefore tally.

Input in P097	Motor order number (MPRD)	Rated speed n_n [rpm]	Pole pair number Z_p	Current I_n [A]	Voltage U_n [V]	Torque M_n [Nm]	Frequency f_n [Hz]
1	1PH7101-2_F	1750	2	9.7	398	23.5	60.3
2	1PH7103-2_D	1150	2	9.7	391	35.7	40.6
3	1PH7103-2_F	1750	2	12.8	398	34.1	61.0
4	1PH7103-2_G	2300	2	16.3	388	31.1	78.8
5	1PH7105-2_F	1750	2	17.2	398	43.7	60.0
6	1PH7107-2_D	1150	2	17.1	360	59.8	40.3
7	1PH7107-2_F	1750	2	21.7	381	54.6	60.3
8	1PH7131-2_F	1750	2	23.8	398	70.9	59.7
9	1PH7133-2_D	1150	2	27.5	381	112.1	39.7
10	1PH7133-2_F	1750	2	33.1	398	95.5	59.7
11	1PH7133-2_G	2300	2	42.4	398	93.4	78.0
12	1PH7135-2_F	1750	2	40.1	398	117.3	59.5
13	1PH7137-2_D	1150	2	40.6	367	161.9	39.6
14	1PH7137-2_F	1750	2	53.1	357	136.4	59.5
15	1PH7137-2_G	2300	2	54.1	398	120.4	77.8
16	1PH7163-2_B	400	2	28.2	274	226.8	14.3
17	1PH7163-2_D	1150	2	52.2	364	207.6	36.4
18	1PH7163-2_F	1750	2	69.1	364	185.5	59.2
19	1PH7163-2_G	2300	2	77.9	374	157.8	77.4
20	1PH7167-2_B	400	2	35.6	294	310.4	14.3
21	1PH7167-2_D	1150	2	66.4	357	257.4	39.1
22	1PH7167-2_F	1750	2	75.3	398	223.7	59.2
23	1PH7184-2_B	400	2	51.0	271	390	14.2
24	1PH7184-2_D	1150	2	89.0	383	366	39.2
25	1PH7184-2_F	1750	2	120.0	388	324	59.0
26	1PH7184-2_L	2900	2	158.0	395	267	97.4
27	1PH7186-2_B	400	2	67.0	268	505	14.0
28	1PH7186-2_D	1150	2	116.0	390	482	39.1
29	1PH7186-2_F	1750	2	169.0	385	465	59.0

Input in P097	Motor order number (MPRD)	Rated speed n_n [rpm]	Pole pair number Z_p	Current I_n [A]	Voltage U_n [V]	Torque M_n [Nm]	Frequency f_n [Hz]
30	1PH7186-4_L	2900	2	206.0	385	333	97.3
31	1PH7224-2_B	400	2	88.0	268	725	14.0
32	1PH7224-2_D	1150	2	160.0	385	670	38.9
33	1PH7224-2_U	1750	2	203.0	395	600	58.9
34	1PH7224-2_L	2900	2	274.0	395	490	97.3
35	1PH7226-2_B	400	2	114.0	264	935	14.0
36	1PH7226-2_D	1150	2	197.0	390	870	38.9
37	1PH7226-2_F	1750	2	254.0	395	737	58.9
38	1PH7226-2_L	2900	2	348.0	390	610	97.2
39	1PH7228-2_B	400	2	136.0	272	1145	13.9
40	1PH7228-2_D	1150	2	238.0	390	1070	38.9
41	1PH7228-2_F	1750	2	342.0	395	975	58.8
42	1PH7228-2_L	2900	2	402.0	395	708	97.2
43	1PL6184-4_B	400	2	69.0	300	585	14.4
44	1PL6184-4_D	1150	2	121.0	400	540	39.4
45	1PL6184-4_F	1750	2	166.0	400	486	59.3
46	1PL6184-4_L	2900	2	209.0	400	372	97.6
47	1PL6186-4_B	400	2	90.0	290	752	14.3
48	1PL6186-4_D	1150	2	158.0	400	706	39.4
49	1PL6186-4_F	1750	2	231.0	385	682	59.3
50	1PL6186-4_L	2900	2	280.0	390	494	97.5
51	1PL6224-4_B	400	2	117.0	300	1074	14.2
52	1PL6224-4_D	1150	2	218.0	400	997	39.1
53	1PL6224-4_F	1750	2	292.0	400	900	59.2
54	1PL6224-4_L	2900	2	365.0	400	675	97.5
55	1PL6226-4_B	400	2	145.0	305	1361	14.0
56	1PL6226-4_D	1150	2	275.0	400	1287	39.2
57	1PL6226-4_F	1750	2	350.0	400	1091	59.1
58	1PL6226-4_L	2900	2	470.0	400	889	97.4
59	1PL6228-4_B	400	2	181.0	305	1719	14.0
60	1PL6228-4_D	1150	2	334.0	400	1578	39.2
61	1PL6228-4_F	1750	2	470.0	400	1446	59.0
62	1PL6228-4_L	2900	2	530.0	400	988	97.3
63	1PH4103-4HF	1500	2	20.2	350	48	52.9
64	1PH4105-4HF	1500	2	27.3	350	70	53.1
65	1PH4107-4HF	1500	2	34.9	350	89	52.8
66	1PH4133-4HF	1500	2	34.1	350	95	51.9

Input in P097	Motor order number (MPRD)	Rated speed n_n [rpm]	Pole pair number Z_p	Current I_n [A]	Voltage U_n [V]	Torque M_n [Nm]	Frequency f_n [Hz]
67	1PH4135-4HF	1500	2	51.2	350	140	51.6
68	1PH4137-4HF	1500	2	60.5	350	172	51.6
69	1PH4163-4HF	1500	2	86.3	350	236	50.9
70	1PH4167-4HF	1500	2	103.3	350	293	51.0
71	1PH4168-4HF	1500	2	113.0	350	331	51.0
72	1PH7107-2_G	2300	2	24.8	398	50	78.6
73	1PH7167-2_G	2000	2	88.8	350	196	67.4

Table 5 Motor list 1PH7 / 1PL6 / 1PH4

For information about motor ratings and availability please see Catalog DA65.3 "Low-voltage motors for variable-speed drives".

The data stored under the motor numbers describe the design point of the motor. In Chapter 3 "Induction servo motors" of Catalog DA65.3 two operating points are indicated for operation with MASTERDRIVES MC. The operating points are calculated for 400 V and 480 V AC line voltage on the converter input side.

The data for the 480 V line voltage are stored in the control system as the rated motor current is slightly lower for a few motors in this operating point.

P293 "Field weakening frequency" is always decisive for the actual field weakening operating point. The field weakening frequency P293 is automatically calculated for a line voltage of 400 V.

Dimension Drawings

Type	**A**	475 221.9000.00 MB
	B	475 241.9000.00 MB
	C	475 242.9000.00 MB
	D	475 244.9000.00 MB

Type	**E**	476 245.9000.00 MB
	F	476 254.9000.00 MB
	G	476 256.9000.00 MB

Type	**J**	476 233.9100.00 MB
AC	**K**	476 233.9000.00 MB

CAD-Zeichnung
Manuelle Änderung
nicht zulässig

gehört zu:

Darstellung ohne Frontabdeckung
view without front cover

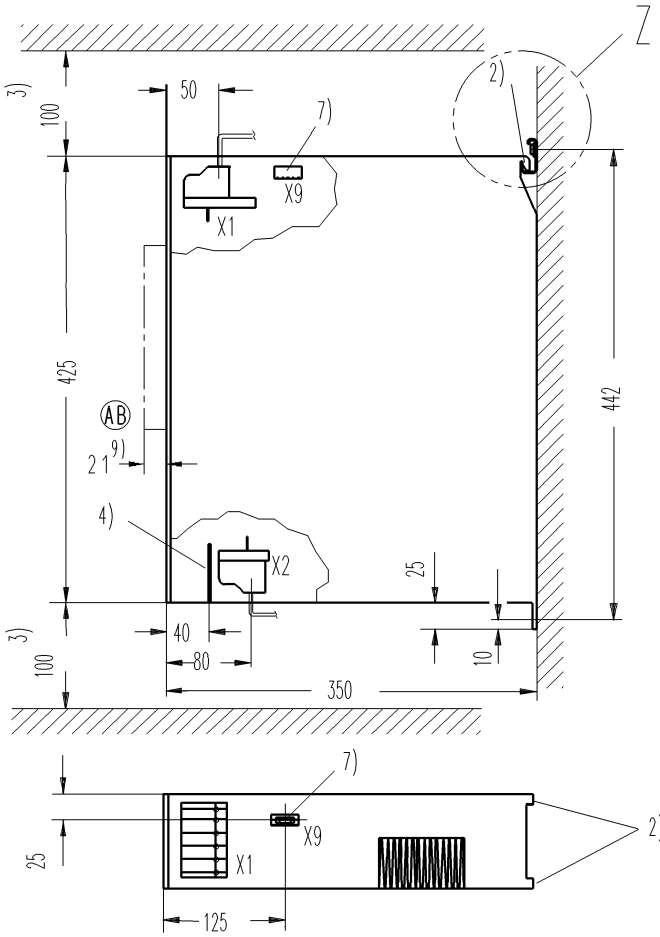

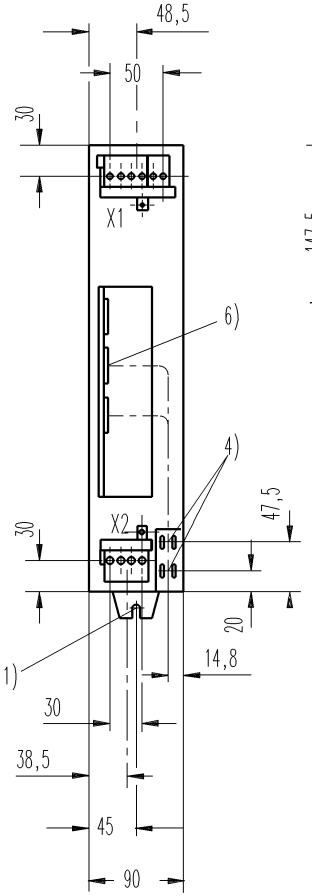

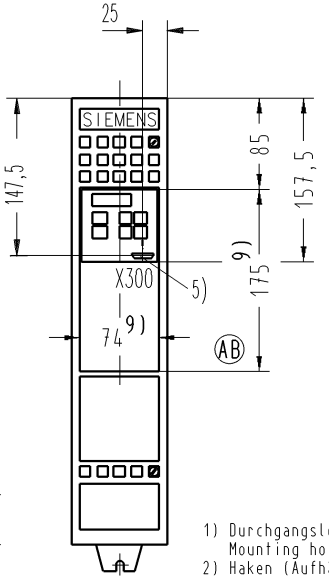

Einzelheit Z

detail Z

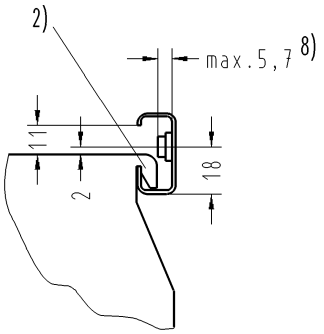

1) Durchgangsloch für Schraube M6/
Mounting hole for screw M6
2) Haken (Aufhängung) zur Befestigung an einer G-Schiene nach EN 50035/
Hook (suspension) for mounting on a g-rail according to EN 50035
3) Notwendiger Luftraum zur Entwärmung der Geräte/
Space required for cooling the unit
4) Schirmanschlagstellen für Signalleitungen(2Schirmschellen)/
screen connection for two cables
5) Schnittstelle (RS485) bzw. Steckverbinder zum OP1/
Sub-D connector for serial communication (RS485) or link to the operator panel OP1
6) Signalanschlüsse auf der CUx/
Connectors on CUx
7) Anschluß externe Stromversorgung und Hilfsschütz/
Connector for ext. power supply and auxiliary contactor
8) Maximale Höhe für Schraubenkopf und Unterlegteil (im Bereich der Haken)/
Max. space for screwhead and washer
(AB) 9) Mit Option OP1/
with option OP1

Maximale Umgebungstemperatur = 40° C/
Max. ambient temperature = 40° C

Anschlußklemmen
terminal

X1

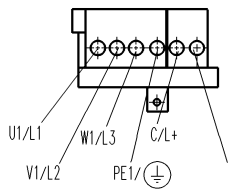

Anschlussquerschnitt:
- eindrähtig und mehrdrähtig 1-16 mm²

wire cross section:
- single core and stranded 1-16 mm²

(AB)

X2

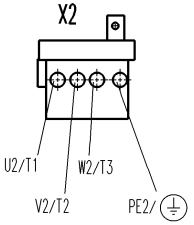

hierzu:

		Allg. Toleranz	Oberfläche:	Maßstab: –	kg/Stück 8,5
		-	-	Baugröße / unit size A (1) 6SE70__-__A__	
			Datum 10.05.1995	SIMOVERT MASTER DRIVES Compact unit AC/DC	
			Bearb. Hentschel		
			Gepr. s.ARTUS-Symbol		
			Norm Hecht	Typ: 6SE70	
			Abt. PE D T3		
AC	904042	26.08.97 Bä	Siemens AG	3 SE.475221.9000.00 MB AC	Blatt
AB	211901	12.08.96 Bä	Bereich ASI 1/8 Erlangen F80		Bl.
Zust.	Mitteilung	Datum Name		Ersatz für/ersetzt durch:	

Angaben für Erstauftrag
Stückzahl: (1 Los)(3 Jahre) Termin:

Confié à titre de secret d' entreprise. Tous droits réservés
Confiado como secreto industrial. Nos reservamos todos los derechos
Comunicado como segredo empresarial. Reservados todos os direitos
Weitergabe sowie Vervielfältigung dieser Unterlage, Verwertung und Mitteilung ihres Inhalts nicht gestattet, soweit nicht ausdrücklich zugestanden. Zuwiderhandlungen verpflichten zu Schadenersatz. Alle Rechte vorbehalten, insbesondere für den Fall der Patenterteilung oder GM-Eintragung.
The reproduction or use of this document or its contents is not permitted without express written authority. Offenders will be liable for damages. All rights, including rights created by patent grant or registration of a utility model or design, are reserved.

I-DEAS MS

CAD-Zeichnung
Manuelle Änderung
nicht zulässig

gehört zu:

Darstellung ohne Frontabdeckung
view without front cover

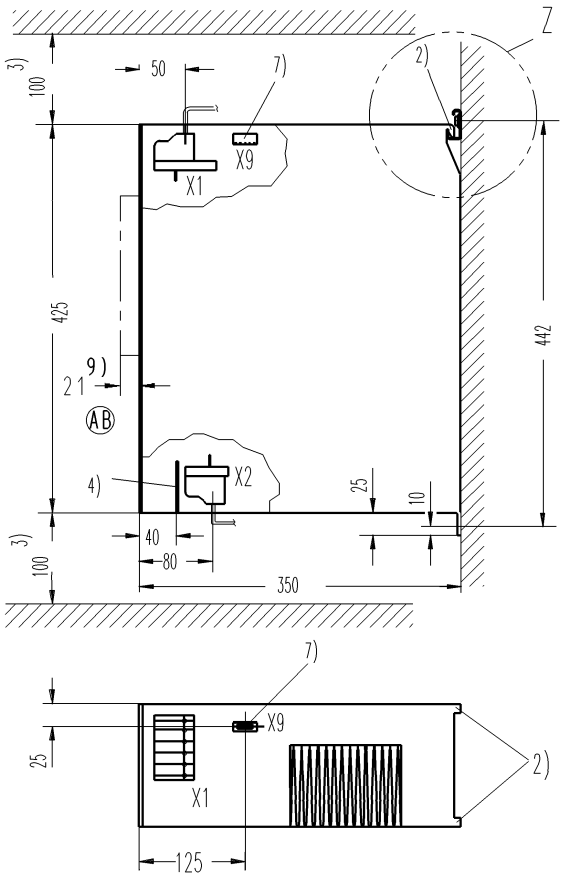

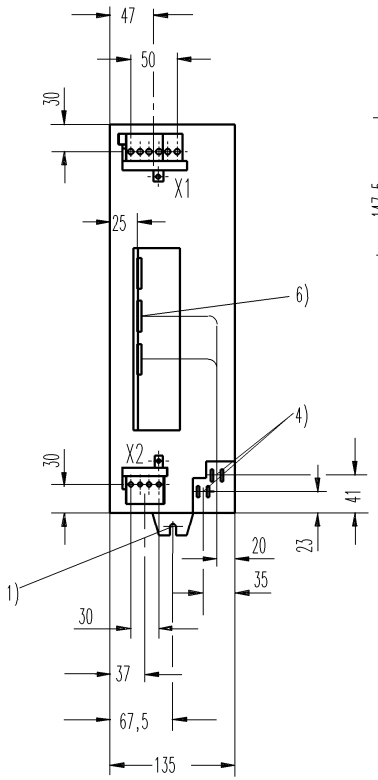

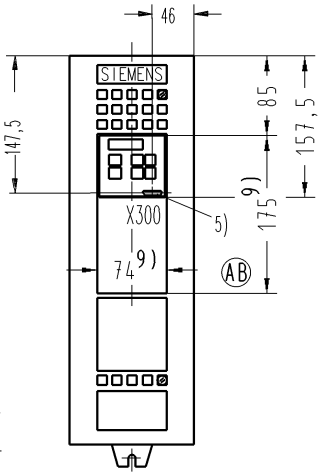

Einzelheit Z
detail Z

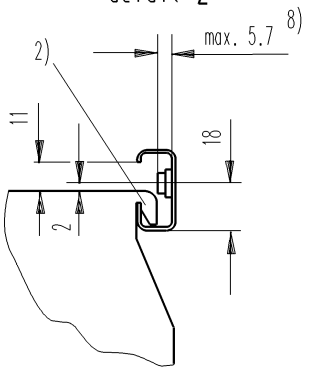

1) Durchgangsloch für Schraube M6/
Mounting hole for screw M6
2) Haken (Aufhängung) zur Befestigung an einer G-Schiene nach EN 50035/
Hook (suspension) for mounting on a g-rail according to EN 50035
3) Notwendiger Luftraum zur Entwärmung der Geräte/
Space required for cooling the unit
4) Schirmanschlagstellen für Signalleitungen(2Schirmschellen)/
screen connection for two cables
5) Schnittstelle (RS485) bzw. Steckverbinder zum OP1/
Sub-D connector for serial communication (RS485) or link to the operator panel OP1
6) Signalanschlüsse auf der CUx/
Connectors on CUx
7) Anschluß externe Stromversorgung und Hilfsschütz/
Connector for ext. power supply and auxiliary contactor
8) Maximale Höhe für Schraubenkopf und Unterlegteil (im Bereich der Haken)/
Max. space for screwhead and washer
AB 9) Mit Option OP1/
with option OP1

Maximale Umgebungstemperatur = 40° C/
Max. ambient temperature = 40° C

Anschlußklemmen
terminal

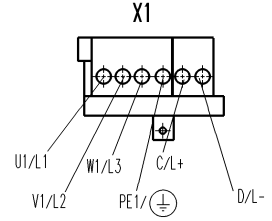

Anschlussquerschnitt:
- eindrähtig und mehrdrähtig: 1-16 mm²

wire cross section:
- single core and stranded: 1-16 mm²

AC

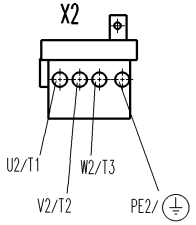

hierzu:

		Allg. Toleranz	Oberfläche:	Maßstab: –	kg/Stück 12,5
		-	-	Baugröße / unit size B (2) 6SE70__-__B__	
			Datum 11.05.1995	SIMOVERT MASTER DRIVES Compact unit AC/DC	
			Bearb. Hentschel		
			Gepr. s.ARTUS-Symbol		
			Norm Hecht	Typ: 6SE70	
			Abt. PE D T3		
AC	904042	26.08.97 Bä	Siemens AG	3 SE.475241.9000.00 MB AC	Blatt
AB	211901	12.08.96 Bä	Bereich ASI 1/8 Erlangen F80		Bl.
Zust.	Mitteilung	Datum Name		Ersatz für/ersetzt durch:	

Angaben für Erstauftrag
Stückzahl: Termin:
(1 Los)(3 Jahre)

Confié à titre de secret d' entreprise. Tous droits réservés
Confiado como secreto industrial. Nos reservamos todos los derechos
Comunicado como segredo empresarial. Reservados todos os direitos
Weitergabe sowie Vervielfältigung dieser Unterlage, Verwertung und Mitteilung ihres Inhalts nicht gestattet, soweit nicht ausdrücklich zugestanden. Zuwiderhandlungen verpflichten zu Schadenersatz. Alle Rechte vorbehalten, insbesondere für den Fall der Patenterteilung oder GM-Eintragung.
The reproduction or use of this document or its contents is not permitted without express written authority. Offenders will be liable for damages. All rights, including rights created by patent grant or registration of a utility model or design, are reserved.

I-DEAS MS

CAD-Zeichnung
Manuelle Änderung
nicht zulässig

gehört zu:

Darstellung ohne Frontabdeckung
view without front cover

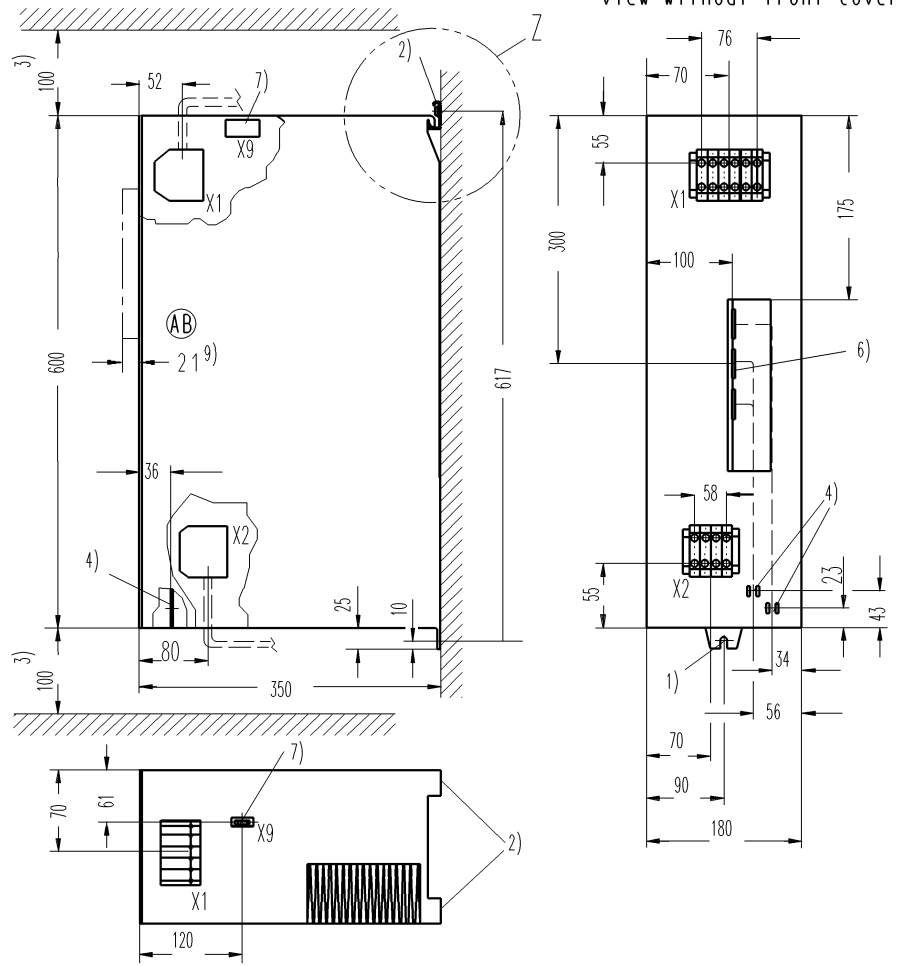

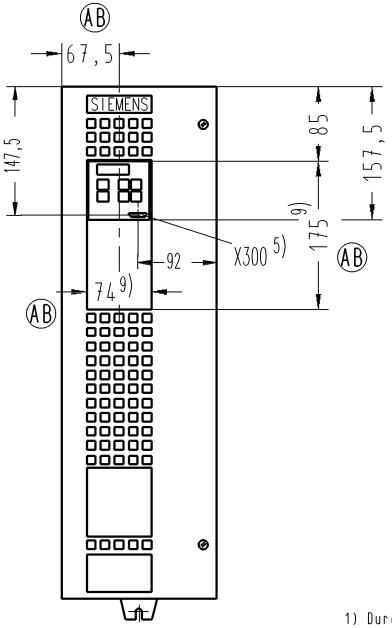

Einzelheit Z
detail Z

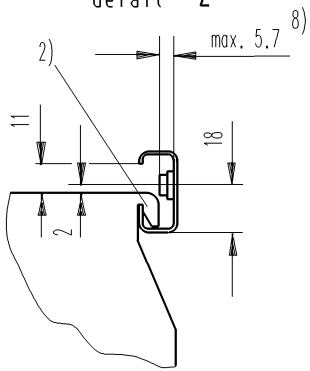

1) Durchgangsloch für Schraube M6/
Mounting hole for screw M6
2) Haken (Aufhängung) zur Befestigung an einer G-Schiene nach EN 50035/
Hook (suspension) for mounting on a g-rail according to EN 50035
3) Notwendiger Luftraum zur Entwärmung der Geräte/
Space required for cooling the unit
4) Schirmanschlagstellen für Signalleitungen(2Schirmschellen)/
screen connection for two cables
5) Schnittstelle (RS485) bzw. Steckverbinder zum OP1/
Sub-D connector for serial communication (RS485) or link to the operator panel OP1
6) Signalanschlüsse auf der CUx/
Connectors on CUx
7) Anschluß externe Stromversorgung und Hilfsschütz/
Connector for ext. power supply and auxiliary contactor
8) Maximale Höhe für Schraubenkopf und Unterlegteil (im Bereich der Haken)/
Max. space for screwhead and washer
AB 9) Mit Option OP1/
with option OP1

Maximale Umgebungstemperatur = 40° C/
Max. ambient temperature = 40° C

Anschlußklemmen
terminal

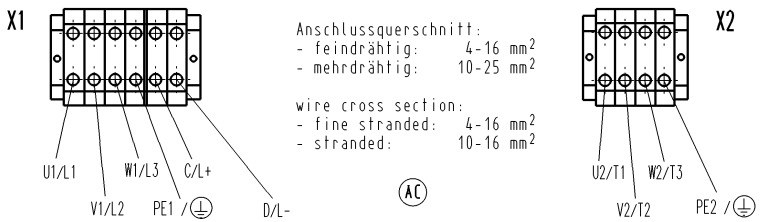

Anschlussquerschnitt:
- feindrähtig: 4-16 mm²
- mehrdrähtig: 10-25 mm²

wire cross section:
- fine stranded: 4-16 mm²
- stranded: 10-16 mm²

AC

hierzu:

		Allg. Toleranz	Oberfläche:	Maßstab: -	kg/Stück 21
		-	-	Baugröße / unit size C (3) 6SE70__-__C__	
			Datum 11.05.1995	SIMOVERT MASTER DRIVES Compact unit AC/DC	
			Bearb. Hentschel		
			Gepr. s.ARTUS-Symbol		
			Norm Hecht	Typ: 6SE70	
			Abt. PE D T3		
AC	904042	26.08.97 Bä	Siemens AG Bereich ASI 1/8 Erlangen F80	3 SE.475242.9000.00 MB AC	Blatt
AB	211901	12.08.96 Bä			Bl.
Zust.	Mitteilung	Datum	Name	Ersatz für/ersetzt durch:	

I-DEAS MS

Angaben für Erstauftrag
Stückzahl: / (1.Los)(3 Jahre)
Termin:

Confié à titre de secret d' enterprise. Tous droits réservés
Confiado como secreto industrial. Nos reservamos todos los derechos
Comunicado como segredo empresarial. Reservados todos os direitos

Weitergabe sowie Vervielfältigung dieser Unterlage, Verwertung und Mitteilung ihres Inhalts nicht gestattet, soweit nicht ausdrücklich zugestanden. Zuwiderhandlungen verpflichten zu Schadenersatz. Alle Rechte vorbehalten, insbesondere für den Fall der Patenterteilung oder GM-Eintragung.

The reproduction or use of this document or its contents is not permitted without express written authority. Offenders will be liable for damages. All rights, including rights created by patent grant or registration of a utility model or design, are reserved.

CAD-Zeichnung
Manuelle Änderung
nicht zulässig

Darstellung ohne Frontabdeckung
view without front cover

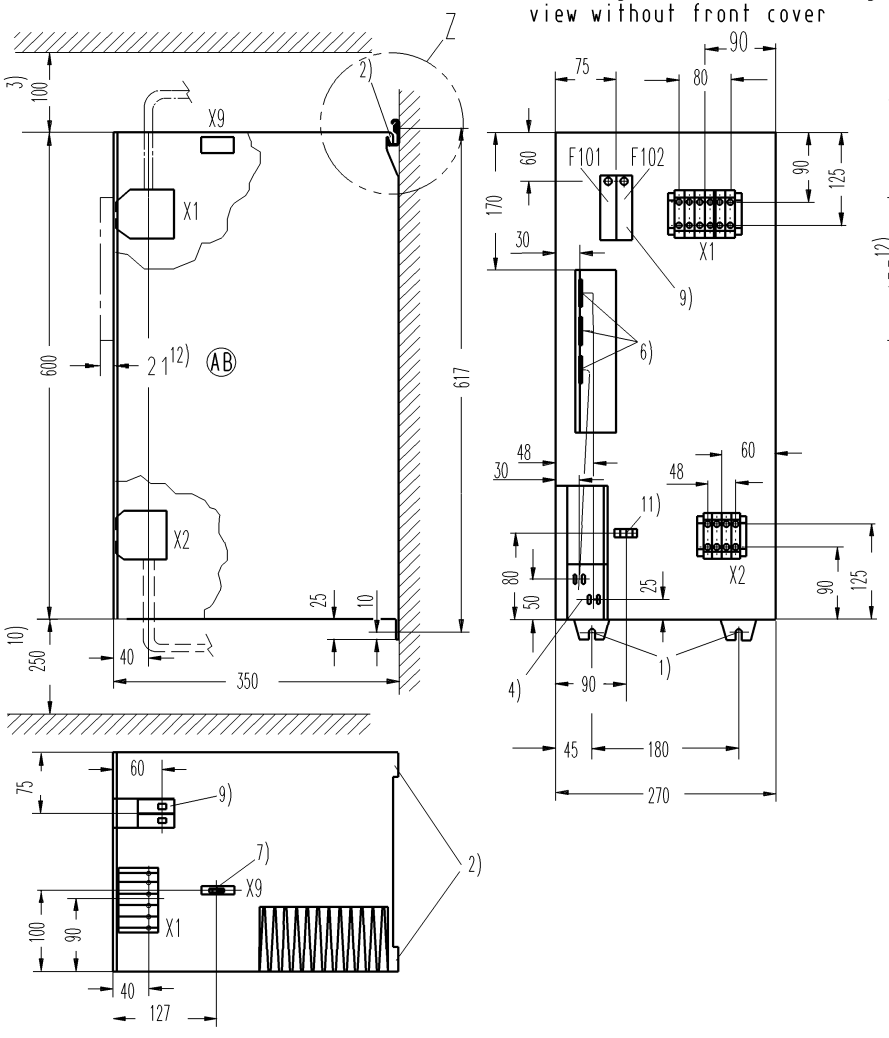

Einzelheit Z
detail Z

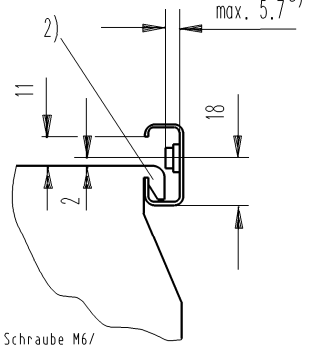

1) Durchgangsloch für Schraube M6/
Mounting hole for screw M6
2) Haken (Aufhängung) zur Befestigung an einer G-Schiene nach EN 50035/
Hook (suspension) for mounting on a g-rail according to EN 50035
3) Notwendiger Luftraum zur Entwärmung der Geräte/
Space required for cooling the unit
4) Schirmanschlagstellen für Signalleitungen(2Schirmschellen)/
screen connection for two cables
5) Schnittstelle (RS485) bzw. Steckverbinder zum OP1/
Sub-D connector for serial communication (RS485) or link to the operator panel OP1
6) Signalanschlüsse auf der CUx/
Connectors on CUx
7) Anschluß externe Stromversorgung und Hilfsschütz/
Connector for ext. power supply and auxiliary contactor
8) Maximale Höhe für Schraubenkopf und Unterlegteil (im Bereich der Haken)/
Max. space for screwhead and washer
9) Ventilator - Sicherungen/
Fan - fuses
10) Notwendiger Freiraum zur Entwärmung des Gerätes und zum Wechseln der Ventilatoreinheit/
Space required for cooling the converter and removing the fan unit
11) Anpassung Ventilatorspannung/
Adjustment fan voltage
(AB) 12) Mit Option OP1/
with option OP1

Maximale Umgebungstemperatur = 40° C/
Max. ambient temperature = 40° C

Anschlußklemmen
terminal

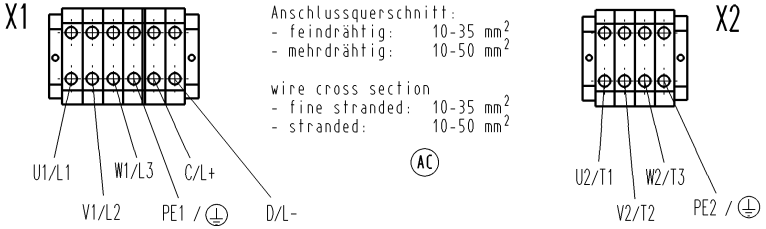

Anschlussquerschnitt:
- feindrähtig: 10-35 mm²
- mehrdrähtig: 10-50 mm²

wire cross section
- fine stranded: 10-35 mm²
- stranded: 10-50 mm²

(AC)

gehört zu:

hierzu:

		Allg. Toleranz	Oberfläche:	Maßstab: –	kg/Stück 32
		–	–	Baugröße / unit size D (4) 6SE70__-__D_	
			Datum 12.05.1995	SIMOVERT MASTER DRIVES Compact unit AC/DC	
			Bearb. Hentschel		
			Gepr. s.ARTUS-Symbol		
			Norm Hecht	Typ: 6SE70	
			Abt. PE D T3		
AC	904042	26.08.97 Bä	Siemens AG	3 SE.475244.9000.00 MB AC	Blatt
AB	211901	12.08.96 Bä	Bereich ASI 1/8 Erlangen F80		Bl.
Zust.	Mitteilung	Datum Name		Ersatz für/ersetzt durch:	

Angaben für Erstauftrag
Stückzahl: Termin:
(1.Los)(3 Jahre)

Confié à titre de secret d' entreprise. Tous droits réservés
Confiado como secreto industrial. Nos reservamos todos los derechos
Comunicado como segredo empresarial. Reservados todos os direitos
Weitergabe sowie Vervielfältigung dieser Unterlage, Verwertung und Mitteilung ihres Inhalts nicht gestattet, soweit nicht ausdrücklich zugestanden. Zuwiderhandlungen verpflichten zu Schadenersatz. Alle Rechte vorbehalten, insbesondere für den Fall der Patenterteilung oder GM-Eintragung.
The reproduction or use of this document or its contents is not permitted without express written authority. Offenders will be liable for damages. All rights, including rights created by patent grant or registration of a utility model or design, are reserved.

I-DEAS MS

CAD-Zeichnung
Manuell e Änderung
nicht zulässig

gehört zu:

Vorderansicht
front view

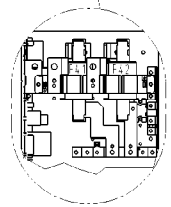

FA1/FA2 oder Stromschienenbrücke
FA1/FA2 or busbar bridge

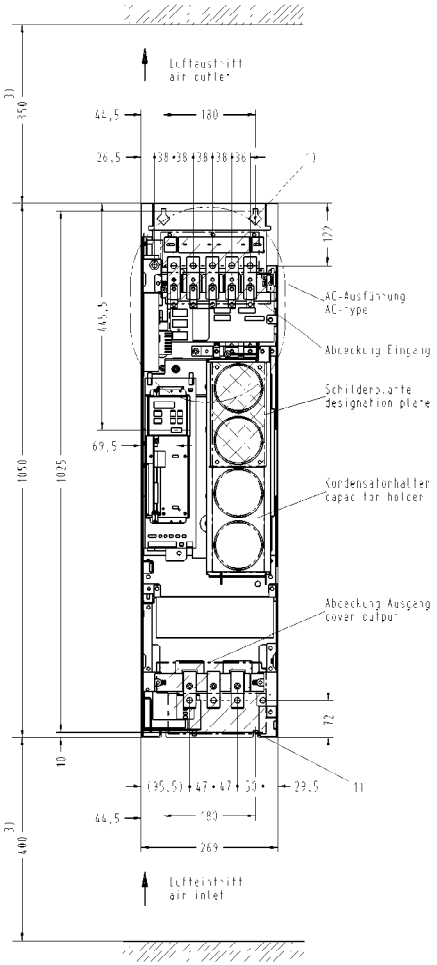

Seitenansicht links
side view left

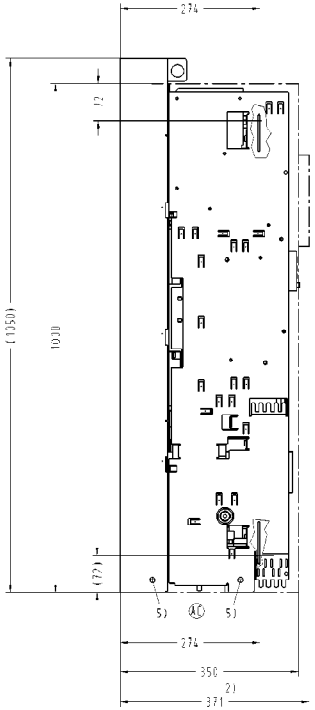

Vorderansicht IP20-Ausführung
front view IP20-design

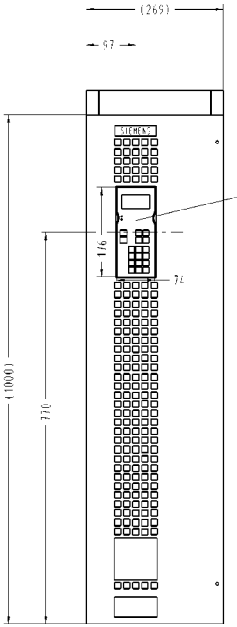

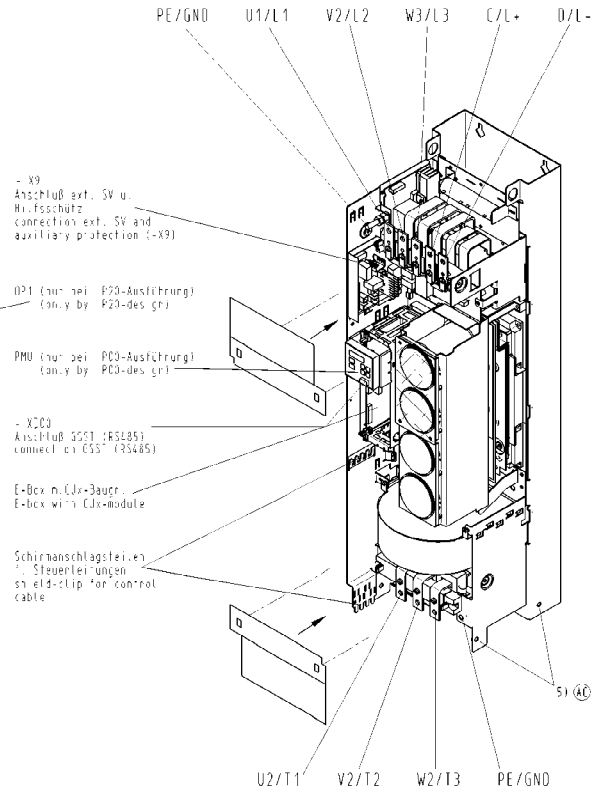

1) Schrank-/Wandbefestigung
mit Schraube M8
Cabinet-/wall-mounting
with screw M8

2) Schutzart IP20
Protection IP20

3) Luftraum für Kühlung
Space required for cooling

4) Gewicht / Weight: IP00 = 55kg / IP20 = 70kg

AC 5) Nach Abnahme der Transportbleche sind hier Anschraubmöglichkeiten (M8) für Blechteile zur Schirmauflage der Motorleitungen./
After removing transport brackets, there are possibilities (M8) for mounting sheet metal parts for sheeld connection of motor cables.

Maßblatt / Dimension drawing
Maße in mm / Dimension in mm

Max. Umgebungstemp. = 40°C
Max. ambient temp. = 40°C

U1/V1/W1 nur bei AC-Ausführung
L1/L2/L3 only by AC-version

AD Geräuschpegel: 71 db A
Noise level: 71 db A

AB Anschlüsse U1/V1/W1/U2/V2/W2/C/D/PE1/PE2 ø11 (M10)
Anschlußquerschnitte bei IP00 max. 2x95mm²
IP20 max. 2x70mm²
(Querschnitt der Stromschienen: AC/DC = 25x5 mm)
Connection L1/L2/L3/T1/T2/T3/L+/L-/GND ø11 (M10)
Wire range by IP00 max. 2x95mm²
IP20 max. 2x70mm²
(cross section of current bars: AC/DC = 25x5 mm)

Achtung: Schwerpunktverlagerung
Attention: Displacement of the centre of gravity

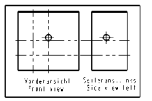

Confié à tiers ou soumis à l'entreprise. Tous droits réservés
Cerrado este secreto indicado a. Nos reservamos todos los derechos
Comunicado como segredo empresa el. Reservados todos os direitos

The reproduction or use of this document or its contents is not permitted without express written authority. Offenders will be liable for damages. All rights, including rights created by patent grant or registration of a utility model or design, are reserved.

Weitergabe sowie Vervielfältigung dieser Unterlage, Verwertung und Mitteilung ihres Inhalts nicht gestattet, soweit nicht ausdrücklich zugestanden. Zuwiderhandlungen verpflichten

Änderung / Änderung	Datum	Name	Allg. Toleranz ISO 2768-mK Fertigung ISO 8015	Oberfläche	Maßstab 1:5 kg/Stück 4)
					Baugröße / unit size E (5) 6SE70_ _-_ _ E_ _
				Datum 25.06.95	SIMOVERT Master Drive Chassis unit AC/DC
				Bearb. Meißl/Tel	
				Norm. in ANTOS-System	
				Norm. Nr.:	Typ 6SE70
				Kat. "E" 3 T3	

T-IDEAS MS

CAD-Zeichnung
Manuelle Änderung
nicht zulässig

gehört zu:

Vorderansicht
front view

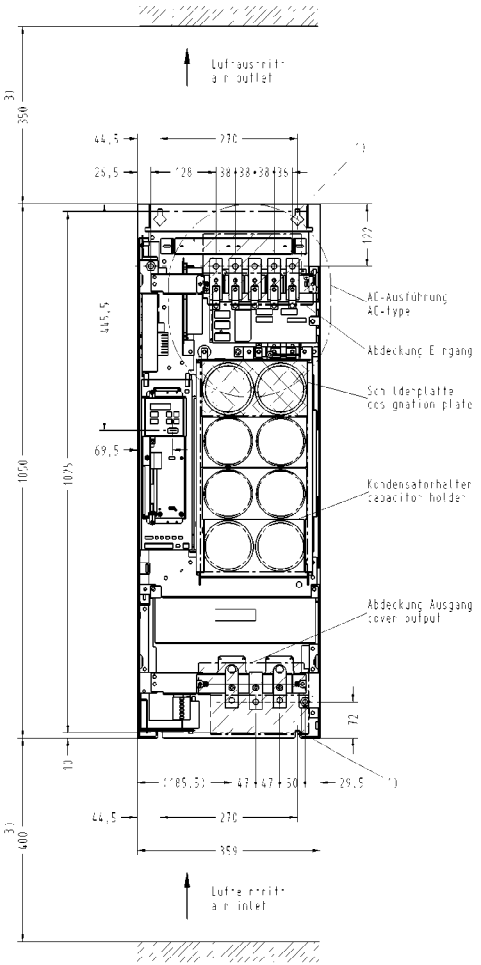

DC-Ausführung (Darstellung ohne Abdeckung)
DC-type (shown without cover)

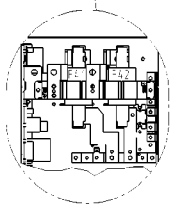

F41/F42 oder Stromschienenbrücke
F41/F42 or busbar bridge

Seitenansicht links
side view left

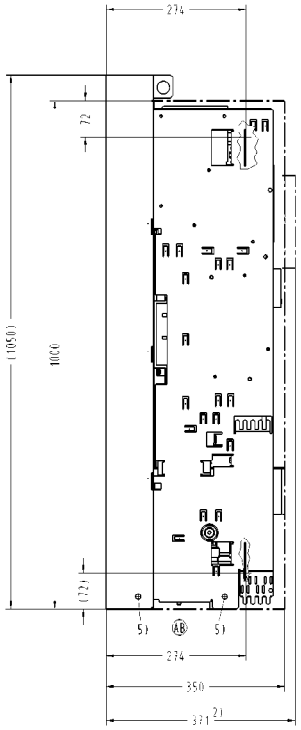

Vorderansicht IP20-Ausführung
front view IP20-design

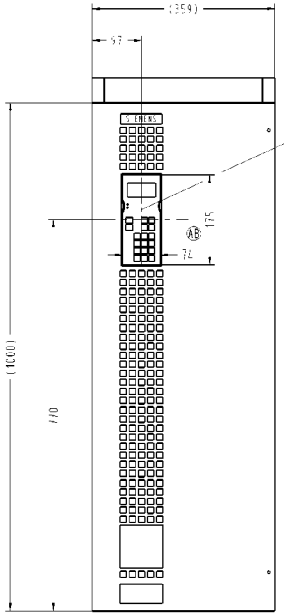

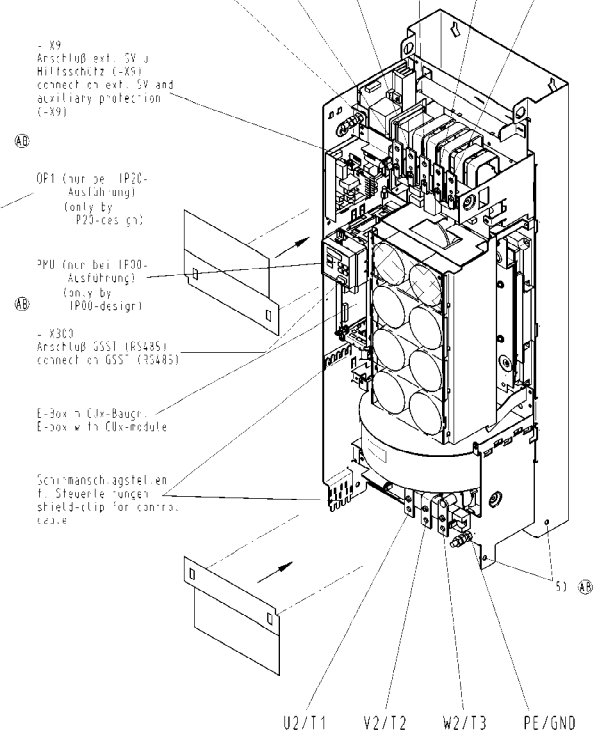

Maßblatt / Dimension drawing
Maße in mm / Dimensions in mm

Max. Umgebungstemp. = 40°C
Max. ambient temp. = 40°C

U1/V1/W1 nur bei AC-Ausführung
L1/L2/L3 only by AC-version

AC Geräuschpegel: 71 db A
Noise Level: 71 db A

Anschlüsse U1/V1/W1/U2/V2/W2/C/D/PE1/PE2 ⌀11 (M10)
Anschlußquerschnitte bei IP00 max. 2x95mm²
IP20 max. 2x70mm²

AB (Querschnitt Stromschienen: AC/DC = 25x5mm)

Connection L1/L2/L3/T1/T2/T3/L+/L-/GND ⌀11 (M10)
Wire range by IP00 max. 2x95mm²
IP20 max. 2x70mm²

AB (cross section current bars: AC/DC = 25x5mm)

Achtung: Schwerpunktverlagerung
Attention: Displacement of the centre of gravity

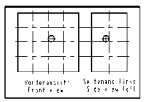

1) Schrank-/Wandbefestigung
mit Schraube M8
Cabinet-/wall-mounting
with screw M8

2) Schutzart IP20
Protection IP20

3) Luftraum für Kühlung
Space required for cooling

4) Gewicht / Weight: IP00 = 65kg / IP20 = 82kg

AB 5) Nach Abnahme der Transportbleche sind hier Anschraubmöglichkeiten (M8) für Blechteile zur Schirmauflage der Motorleitungen./
After removing transport brackets, there are possibilities (M8) for mounting sheet metal

Cette à titre de secret d'entreprise. Tous droits réservés
Entregado este secreto industrial. Nos reservamos todos los derechos
Comunicado como segredo empresarial. Reservados todos os direitos
The reproduction or use of this document or its contents is not permitted without express written authority. Offenders will be liable for damages. All rights, including rights created by patent grant or registration of a utility model or design, are reserved.
Weitergabe sowie Vervielfältigung dieser Unterlage, Verwertung und Mitteilung ihres Inhalts nicht gestattet, soweit nicht ausdrücklich zugestanden. Zuwiderhandlungen verpflichten

	Allg. Toleranz ISO 2768-mK Fertigung ISO 8015	Oberfläche	Maßstab 1:5	kg/Stück 41
			Baugröße / unit size F (6)	
			6SE70_._-_ _F_ _	
		Bearb. 15.06.95	SIMOVERT MASTER DRIVES	
		Bearb. Meist. (Tel)	Chassis unit AC/DC	
		Appr. in AUTOS-System		
		Norm. Nach:	Typ 6SE70	
		Ers. f. 6SE 0 T3		

T-DEAS MS

CAD-Zeichnung
Manuelle Änderung
nicht zulässig

gehört zu:

Vorderansicht
front view

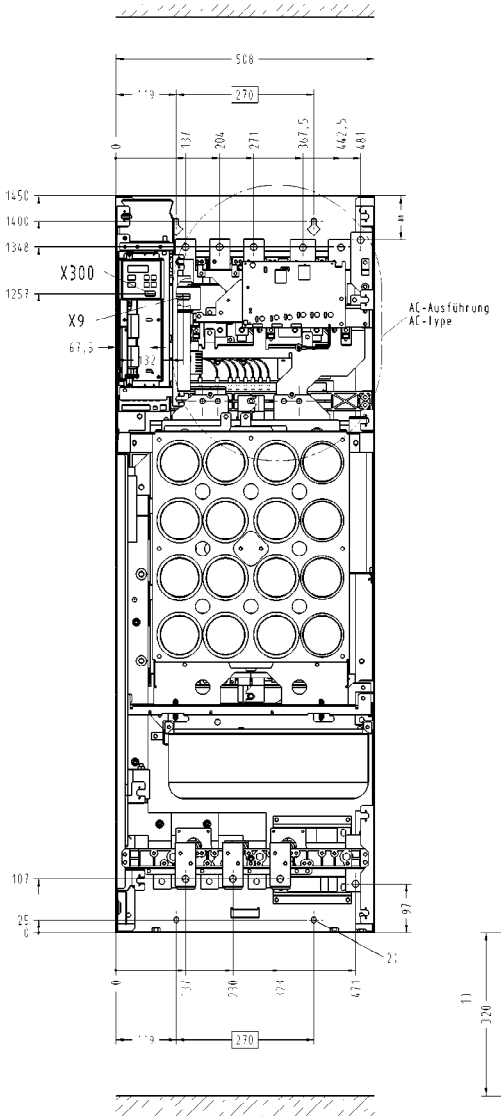

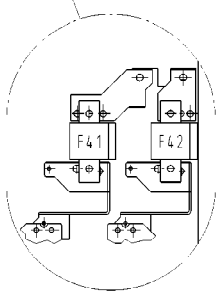

Seitenansicht links
side view left

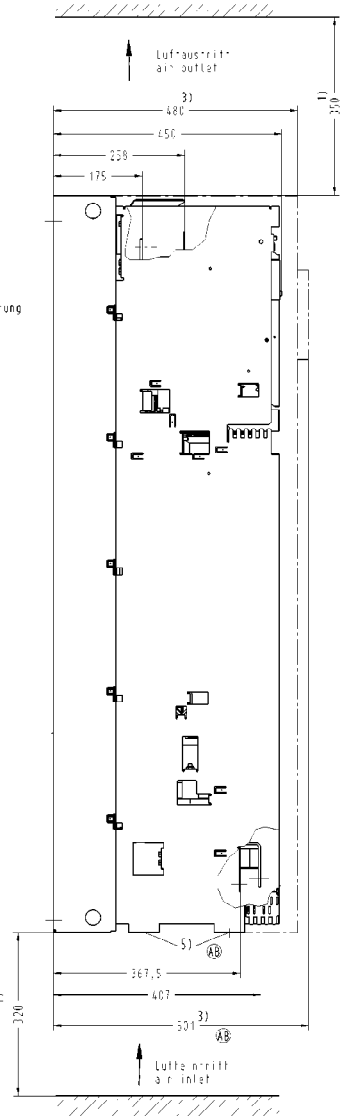

Vorderansicht IP20-Ausführung
front view IP20-design

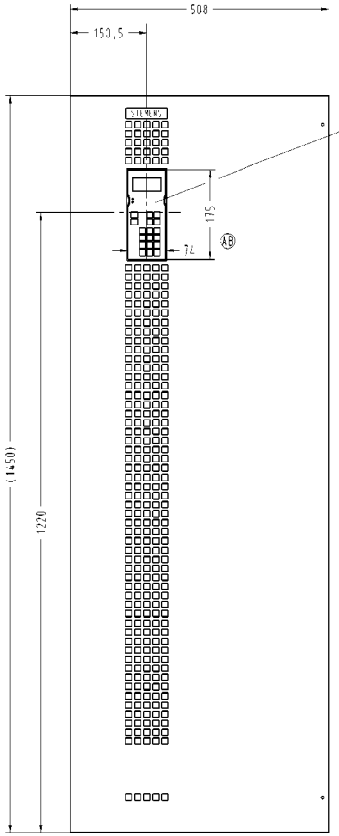

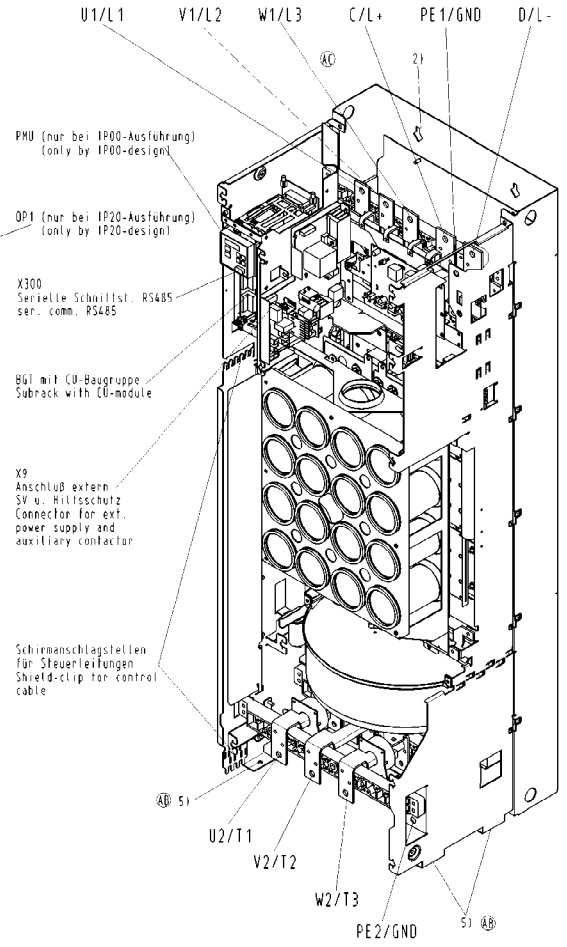

1) Luftraum für Kühlung
Space required for cooling

2) Schrank-/Wandbef. mit Sechskantschr. M8
Cabinet-/wall-mount. with hexagon head screws M8

3) Schutzart IP20
Protection IP20

4) Gewicht / Weight:
IP00=155kg / IP20=186kg

AB 5) Nach Abnahme der Transportbleche sind hier Anschraubmöglichkeiten (M8) für Blechteile zur Schirmauflage der Motorleitungen./
After removing transport brackets, there are possibilities (M8) for mounting sheet metal parts for sheeld connection of motor cables.

Maßblatt / Dimension drawing
Maße in mm / Dimension in mm

Max. Umgebungstemp. = 40°C
Max. ambient temp. = 40°C

U1/V1/W1 nur bei AC-Ausführung
L1/L2/L3 only by AC-version

AC Geräuschpegel: 81 db A
Noise level: 81 db A

Anschlüsse U1/V1/W1/U2/V2/W2/C/D/PE1/PE2 ⌀13,5 (M12)
Anschlußquerschnitte max. 2x150mm²
(Querschnitt Stromschienen: AC = 40x5mm
DC = 50x5mm)/
AB Connection L1/L2/L3/T1/T2/T3/L+/L-/GND ⌀13,5 (M12)
Wire range max. 2x150mm²
(cross section current bars: AC = 40x5mm
DC = 50x5mm)

Achtung: Schwerpunktverlagerung
Attention: Displacement of the centre of gravity

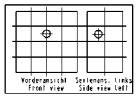

Certific à l'étro du secret d'entreprise. Tous droits réservés
Cerrado este secreto industr a. Nos reservamos todos los derechos
Comunicado como segredo empresa al. Reservados todos os direitos
The reproduction or use of this document or its contents is not permitted without express written authority. Offenders will be liable for damages. All rights, including rights created by patent grant or registration of a utility model or design, are reserved.
Weitergabe sowie Vervielfältigung dieser Unterlage, Verwertung und Mitteilung ihres Inhalts nicht gestattet, soweit nicht ausdrücklich zugestanden. Zuwiderhandlungen verpflichten

Name	Datum	Allg. Toleranz ISO 2768-mK Tolerierung ISO 8015	Oberfläche	Maßstab 1:5	kg/Stück 4)
				Baugröße / unit size G (7)	
			Ersatz für:	6SE70__-___G__	
			Ersetzt durch:	SIMOVERT Master Drives	
			Ausf. n. ANSI-Symbol:	Chassis unit AC/DC	
			Norm:	Typ 6SE70	
Bearb.	25.06.96	Gen. Toleranz	Ers. für:		

T-IDEAS MS

CAD-Zeichnung
Manuelle Änderung
nicht zulässig

gehört zu:

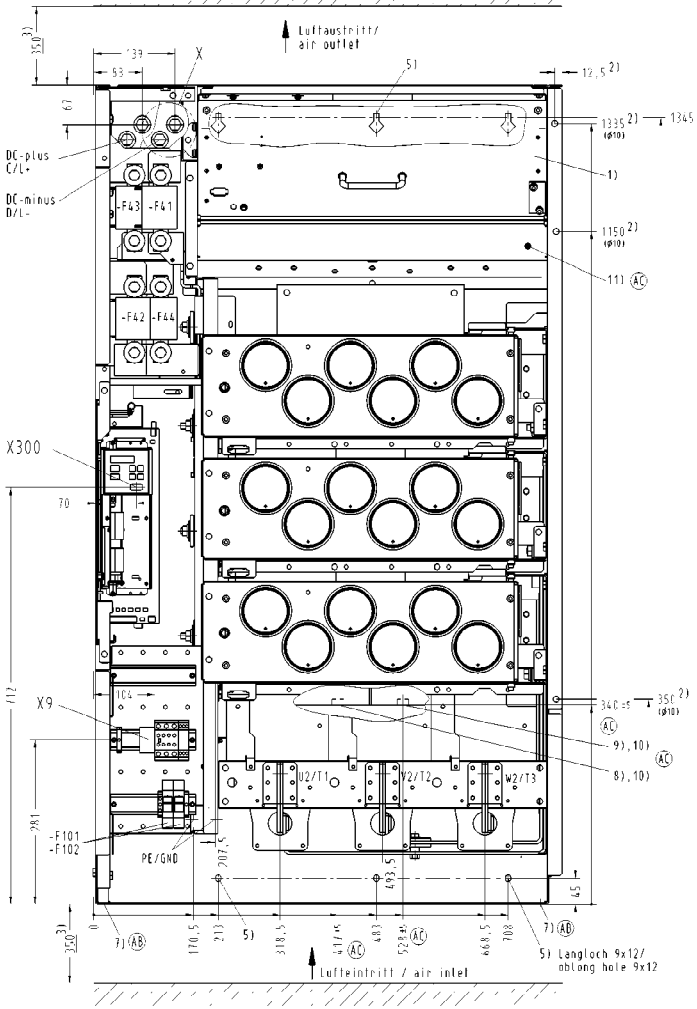

Einzelheit X
detail X

DC-Anschluß nach DIN 43673
mit Kupferschiene 10x60mm/
L+/L- connection acc. to
DIN 43673 with copper busbar
(dimension 10x60mm)

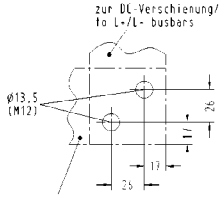

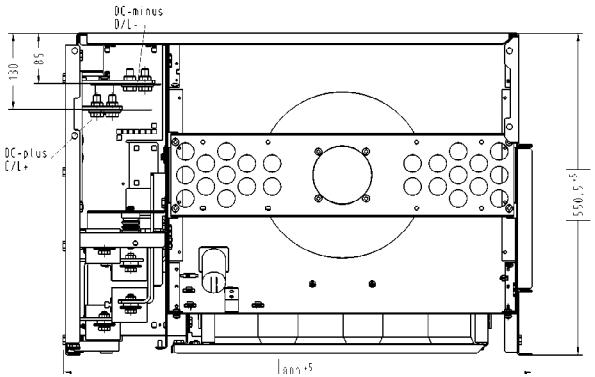

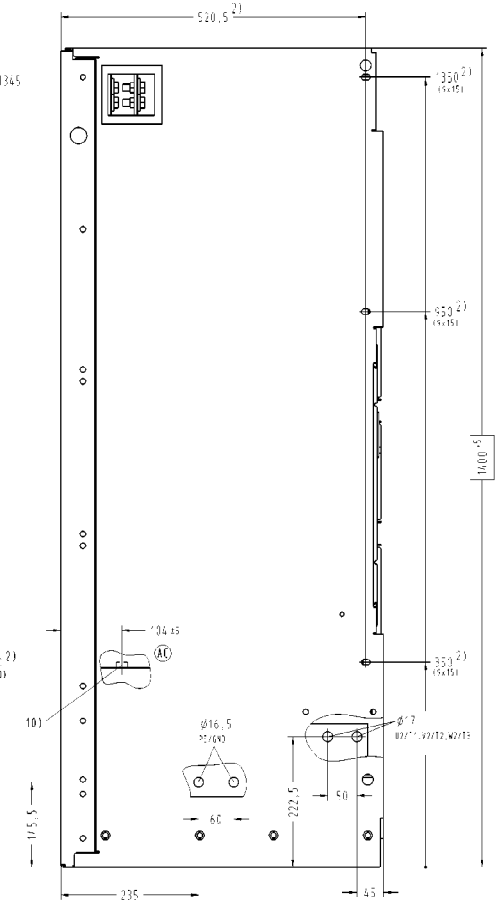

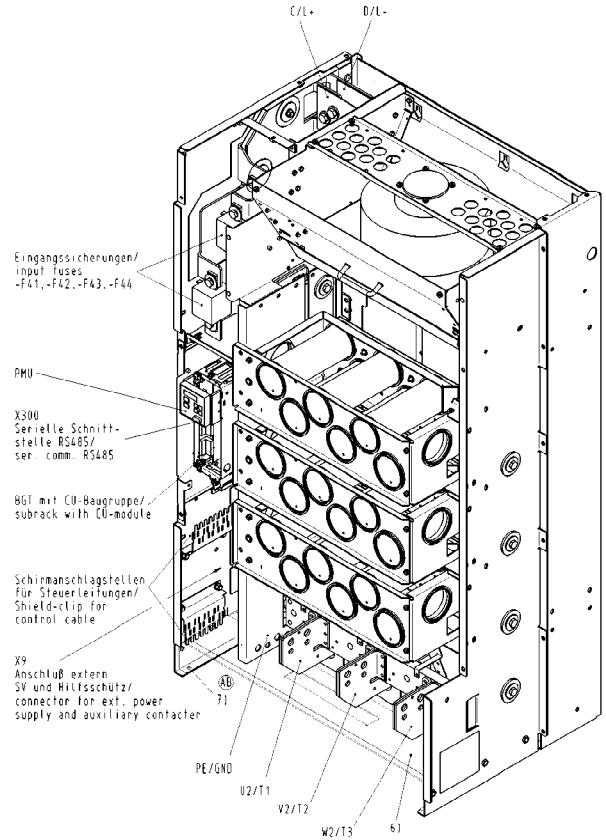

AC
8) Wasserkühlung - Vorlauf/
watercooling inlet

9) Wasserkühlung - Rücklauf/
watercooling outlet (return flow)

10) Bei Wasserkühlung, Anschluß
für Kühlkreislauf direkt am
Kühlkörper - 1"Innengewinde (R1")/
If watercooled units the connections
for cooling circulation are on the
heatsink 1"internal thread (R1")

11) Entlüftung bei Wasserkühlung/
deaeration for watercooled unit

1) Lüftereinschub muß zur
Gerätemontage demontiert werden/
ventilator unit must be removed before
the chassis is to be mounted in a housing

2) zusätzliche Befestigungsmöglichkeit
des Chassis im vorderen Bereich (z.B. am
Schrankholm)/
additional holes for mounting in the front
(e.g. on cubicle frame)

3) Luftraum für Kühlung
ACHTUNG:
Beim Einbau des Chassis beachten,
daß kein Kurzschluß im Luftstrom entsteht!/
space required for cooling
NOTE:
By mounting the chassis into a housing
watch that there is no short-circuit
of air-stream!

4) Gewicht: Netto ca. 350kg
Mit Transportteile ca.370kg/
Weight: net weight app. 350kg
with transport parts app. 370kg

5) Schrank-/Wandbefestigung mit Sechskantschrauben M8/M10/
cabinet-/wall-mounting with hexagon head screws M8/M10

7) Nach Abnahme der Transportbleche sind hier
AC Anschraubmöglichkeiten (ø12) für Blechteile zur
Schirmauflage der Motorleitungen./
After removing transport brackets, there are

6) Transportbleche:

- Tragblech zum Einbau in Schrank
mittels Gabelstapler.
- ACHTUNG:
Tragblech nach Einbau entfernen
- HINWEIS:
Tragblech wird unter Umständen für
späteren Aus-/ Einbau wieder benötigt!/

Transport parts:

- transport parts for moving the
chassis unit in a cabinet with a
fork lift truck
- ATTENTION:
remove transport part after mounting
- Note:
For perhaps later removing the chassis unit,
the transport part needed also.

Achtung: Schwerpunktverlagerung
Attention: Displacement of the
centre of gravity

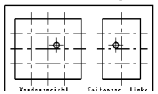

- Maßblatt / Dimension drawing
Maße in mm / Dimension in mm

- Darstellung ohne Abdeckungen/
view without covers

- Max. Umgebungstemp. = 40°C/
max. ambient temp. = 40°C

- Anschlüsse C/D	ø13,5	(M12)	(siehe Einzelheit X)
U2/V2/W2	ø17	(M16)	(max. 4x300mm² oder Stromschiene 90 x 5mm)
PE	ø16,3	(M16)	(max. 4x300mm² oder Stromschiene 90 x 5mm)/
	ø12,7	(M12)	(max. 4x300mm² oder Stromschiene 90 x 5mm)
connection L+/L-	ø13,5	(M12)	(see detail X)
T1/T2/T3	ø17	(M16)	(max. 4x300mm² or busbar 90 x 5mm)
GND	ø16,3	(M16)	(max. 4x300mm² or busbar 90 x 5mm)
	ø12,7	(M12)	(max. 4x300mm² or busbar 90 x 5mm)

- Geräuschpegel: 80 db A/
noise level: 80 db A

Gerätt à l'étrou du secret d'entreprise. Tous droits réservés
Cortitude cate secrete industr a. Mes reservatos tocos los corechos
Comunicado como secreto empresa el. Reservados todos los derechos
The reproduction or use of this document or its
contents is not permitted without express written authority.
Offenders will be liable for damages. All rights, including rights
created by patent grant or registration of a utility model or design,
are reserved.
Weitergabe sowie Vervielfältigung dieser Unterlage, Verwer-
tung und Mitteilung ihres Inhalts nicht gestattet, soweit nicht
ausdrücklich zugestanden. Zuwiderhandlungen verpflichten

Änderung Index	Datum Name	Allg. Toleranz ISO 2768-mK Fertigung ISO 6015	Oberfläche
		Gepr.	
		Norm	

Maßstab -- kg/Stück 4)

Baugröße / unit size J (9)
6SE70__-__J__

SIMOVERT Master Drives
Chassis unit DC
Typ 6SE70

Datei: 25.07.96
Bearb.: Hentschel
Kopr. in AUTOCAD-Symbol
Kons.
Kal.: A P1 C 13

T-DEAS MS

CAD-Zeichnung
Manuelle Änderung nicht zulässig

gehört zu.

Einzelheit X
detail X
M 1:2

Achtung: Schwerpunktverlagerung
Attention: Displacement of the centre of gravity

- Maßblatt / Dimension drawing
  Maße in mm / Dimension in mm
- Darstellung ohne Abdeckungen /
  view without covers
- Max. Umgebungstemp. = 40°C /
  max. ambient temp. = 40°C
- Anschlüsse: U1/V1/W1 (M16/M12) (max. 2x300mm² oder Stromschiene 45x10mm)
  U2/V2/W2 (M16) (max. 4x300mm² oder Stromschiene 90x5mm)
  PE (M16) (max. 4x300mm² oder Stromschiene 90x5mm)
  connection: L1/L2/L3 (M16/M12) (max. 2x300mm² or busbar 45x10mm)
  T1/T2/T3 (M16) (max. 4x300mm² or busbar 90x5mm)
  GND (M16) (max. 4x300mm² or busbar 90x5mm)
- Geräuschpegel: 77 db A
  Noise level: 77 db A

1) Lüftereinschub muß zur Gerätemontage demontiert werden /
ventilator unit must be removed before the chassis is to be mounted in a housing

2) zusätzliche Befestigungsmöglichkeit des Chassis im vorderen Bereich (z.B. am Schrankholm) /
additional holes for mounting in the front (e.g. on cubicle frame)

3) Luftraum für Kühlung
ACHTUNG:
Beim Einbau des Chassis beachten, daß kein Kurzschluß im Luftstrom entsteht! /
space required for cooling
NOTE:
By mounting the chassis into a housing watch that there is no short-circuit of air-stream!

4) Gewicht: Netto ca.455kg
Mit Transportteile ca.475kg
Weight: net weight app.455kg
with transport parts app.475kg

5) Schrank-/Wandbefestigung mit Sechskantschrauben M8/M10 /
cabinet-/wall-mounting with hexagon head screws M8/M10

6) TRANSPORTBLECHE:
- Tragblech zum Einbau in Schrank mittels Gabelstapler
- ACHTUNG:
  Tragblech nach Einbau entfernen
- HINWEIS:
  Tragblech wird unter Umständen für späteren Aus-/Einbau wieder benötigt! /

TRANSPORT PARTS:
- transport parts for moving the chassis unit in a cabinet with a fork lift truck
- ATTENTION:
  remove transport part after mounting
- NOTE:
  for perhaps later removing the chassis unit, the transport part needed also

7) Nach Abnahme der Transportbleche sind hier Anschraubmöglichkeiten (Ø12) für Blechteile zur Schirmauflage der Motorleitungen./
After removing transport brackets, there are possibilities (Ø12) for mounting sheet metal parts for sheeld connection of motor cables.

8) Wasserkühlung - Vorlauf/
watercooling inlet

9) Wasserkühlung - Rücklauf/
watercooling outlet (return flow)

10) Bei Wasserkühlung, Anschluß für Kühlkreislauf direkt am Kühlkörper - 1"Innengewinde (R1")/
If watercooled units the connections for cooling circulation are on the heatsink 1"internal thread (R1")

11) Entlüftung bei Wasserkühlung/

Confié à titre de secret d' enterprise. Tous droits réservés

Confiado como secreto industrial. Nos reservamos todos los derechos

Comunicado como segredo empresarial. Reservados todos os direitos

The reproduction or use of this document or its contens is not permitted without express written authority. Offenders will be liable for damages. All rights, including rights created by patent grant or registration of a utility model or design, are reserved.

Weitergabe sowie Vervielfältigung dieser Unterlage, Verwertung und Mitteilung ihres Inhalts nicht gestattet, soweit nicht

Termin:

hierzu:

Allg. Toleranz ISO 2768-mK Tolerierung ISO 8015	Oberfläche -----	Maßstab - -	kg/Stück 4)
Datum	16.05.97	Baugröße / unit size K (B10) 6SE70__-_xK__ x = E, F, H	AC
Bearb.	Weichselbaum	SIMOVERT Master Drives Chassis unit AC	
Gepr.	s. ARTUS-Symbol	Typ: 6SE70	
Norm			

I-DEAS MS

The following editions have been published so far:

Edition	Internal Item Number
AB	475 500 4050 76 J AB-76
AC	475 500 4050 76 J AC-76
AD	475 500 4050 76 J AD-76
AE	475 500 4050 76 J AE-76
AF	A5E00391503
AG	A5E00391503
AH	A5E00391503

Version AH consists of the following chapters:

Chapter		Changes	Pages	Version date
1	System Description	reviewed edition	4	01.2002
2	Configuration and Connection Examples	reviewed edition	18	01.2002
3	Instructions for Design of Drives in Conformance with EMC Regulations	reviewed edition	26	01.1999
4	Function Blocks and Parameters	reviewed edition	9	01.2002
5	Parameterization	reviewed edition	71	01.2002
6	Parameterizing Steps	reviewed edition	40	01.2002
7	Functions	reviewed edition	67	01.2002
8	Communication	reviewed edition	1	01.2002
8.1	Universal Serial lnterface (USS)	reviewed edition	43	01.2002
8.2	PROFIBUS	reviewed edition	137	06.2005
8.3	SIMOLINK	reviewed edition	27	01.2002
8.4	CBC Communications Board	reviewed edition	60	01.2002
8.5	CBC CANopen communication board	first edition	133	01.2002
9	Technology Option F01	reviewed edition	180	01.2002
10	Process Data	reviewed edition	14	10.2000
11	Engineering Information	reviewed edition	44	11.1999
	Function Diagrams	reviewed edition	196	01.2006
	Parameter Lists	reviewed edition	297	01.2002
	Faults und Alarms	reviewed edition	35	06.2005
	Lists of Stored Motors	reviewed edition	8	01.2002
	Dimension Drawings	reviewed edition	10	11.1999

We reserve the right to make changes to functions, technical data, standards, drawings and parameters.

The reproduction, transmission or use of this document or its contents is not permitted without express written authority. Offenders will be liable for damages. All rights, including rights created by patent grant or registration of a utility model or design, are reserved.

We have checked the contents of this document to ensure that they coincide with the described hardware and software. However, differences cannot be completely excluded, so that we do not accept any guarantee for complete conformance. However, the information in this document is regularly checked and necessary corrections will be included in subsequent editions. We are grateful for any recommendations for improvement.

SIMOVERT® Registered Trade Mark

Siemens AG
Automation and Drives
Motion Control Systems
P.O. Box 3180, D – 91050 Erlangen
Germany

www.siemens.com/motioncontrol

© Siemens AG 2006
Subject to change without prior notice
Order No.: 6SE7087-6QX50

Printed in Germany